TEKTRONIX®

DD 501
DIGITAL DELAY

WITH OPTIONS

INSTRUCTION MANUAL

WARRANTY

All TEKTRONIX instruments are warranted against defective materials and workmanship for one year. Any questions with respect to the warranty should be taken up with your TEKTRONIX Field Engineer or representative.

All requests for repairs and replacement parts should be directed to the TEKTRONIX Field Office or representative in your area. This will assure you the fastest possible service. Please include the instrument Type Number or Part Number and Serial Number with all requests for parts or service.

Specifications and price change privileges reserved.

Copyright © 1974, new material 1975, by Tektronix, Inc., Beaverton, Oregon. Printed in the United States of America. All rights reserved. Contents of this publication may not be reproduced in any form without permission of Tektronix, Inc.

U.S.A. and foreign Tektronix products covered by U.S. and foreign patents and/or patents pending.

TEKTRONIX is a registered trademark of Tektronix, Inc.

TABLE OF CONTENTS

		Page
SECTION 1	**OPERATING INSTRUCTIONS**	
	Installation	1-1
	Signal Connection	1-1
	Triggering	1-1
	FRONT-PANEL CONTROLS, CONNECTORS, AND INDICATORS	1-2
SECTION 2	**SPECIFICATION**	
SECTION 3	**THEORY OF OPERATION**	
	BLOCK DIAGRAM DESCRIPTION	3-1
	CIRCUIT OPERATION	
	TRIGGER CIRCUIT 1	3-2
	COUNTER CIRCUIT (SN B020530-up) 2	3-2
	COUNTER CIRCUIT (SN B020529 and below) 2	3-5
	POWER SUPPLY & TRIGGER INDICATOR 3	3-7
SECTION 4	**MAINTENANCE**	
	FUSE REPLACEMENT	4-1
	TABLE 4-2. Rear Connector Pin Assignments	4-1
SECTION 5	**PERFORMANCE CHECK/CALIBRATION**	
	PRELIMINARY INFORMATION	5-1
	Test Equipment Required	5-1
	INDEX TO PERFORMANCE CHECK/CALIBRATION	5-3
	START AND EVENTS INPUT	5-4
	START AND EVENTS TRIGGERING	5-6
SECTION 6	**ELECTRICAL PARTS LIST**	
OPTIONS		
SECTION 7	**DIAGRAMS**	
SECTION 8	**MECHANICAL PARTS LIST**	
CHANGE INFORMATION		

Fig. 1-1. DD 501 Digital Delay.

OPERATING INSTRUCTIONS

INTRODUCTION

The DD 501 Digital Delay is an events counting plug-in unit designed for use in a TM 500-Series Power Module mainframe. Separate external trigger signals are connected to the EVENTS and START INPUT connectors which allows up to 99999 events to be counted. The plug-in unit counts a predetermined number of events, from 0 to 99999, which are selected by the front-panel thumb-wheel switches. The last event counted generates a trigger pulse to the DLY'D TRIG OUT connector on the front panel.

Installation

The DD 501 is calibrated and ready for use when received. It is designed to operate in any compartment of a TM 500-Series Power Module only. To install, align the upper and lower rails of the DD 501 with the Power Module tracks and fully insert it. The front will be flush with the front of the Power Module when the DD 501 is fully inserted.

To remove the DD 501, pull on the latch at the bottom of the front panel and the DD 501 will unlatch. Continue pulling on the latch to slide the DD 501 out of the Power Module. See Fig. 1-2.

Signal Connection

The DD 501 utilizes dc coupling into the EVENTS and START trigger INPUT connectors. In general, probes offer the most convenient means of connecting signals to the DD 501 trigger inputs. Tektronix probes are shielded to prevent pickup of electrostatic interference. A 10X attenuation probe offers a high input impedance and allows the circuit under test to perform very close to normal operating conditions. Also, a 10X probe attenuates the input signal 10 times.

Tektronix probes are designed to monitor the signal source with minimum circuit loading. The use of a probe will, however, limit the maximum trigger frequency range. To obtain maximum trigger bandwidth when using probes, select a probe capable of compensating the input capacitance. Observe the grounding considerations given in the probe manual. The probe-to-connector adapters and the bayonet-ground tip provide the best frequency response.

In high-frequency applications, which require maximum overall bandwidth, use a coaxial cable terminated at the output end in the characteristic impedance of the source. To maintain the high-frequency characteristics of the applied signal, use high-quality, low-loss cable. Resistive coaxial attenuators can be used to minimize reflection if the applied signal has suitable amplitude.

High-level, low-frequency signals can be connected directly to the external trigger inputs with short, unshielded leads. When this method is used, establish a common ground between the DD 501 and the associated equipment. The common ground provided by the line cords is usually inadequate. If interference is excessive with unshielded leads, use a coaxial cable or probe.

The front-panel output signal from the DLY'D TRIG OUT connector should be connected to other equipment with 50 ohm coaxial cable. The cable should be terminated in 50 ohms to maintain the risetime and falltime characteristics of the signal.

Triggering

The input signal may have a wide variety of shapes and amplitudes, many of which are unsuitable as delay-initiating triggers. For this reason, these signals are first

Fig. 1-2. Release latch.

applied to a trigger circuit where they are converted to pulses of uniform amplitude and shape. This makes it possible to start the delay with a pulse that has a constant size, eliminating variations of the delay circuit operation caused by changing input signals. The trigger controls provide a means to select the START and EVENT pulses at any voltage level on either slope of the waveform.

The trigger SLOPE and LEVEL controls determine the slope and voltage of the input signal where the trigger circuit responds. Generally, the best point on a waveform for triggering is where the slope is steep, and therefore usually free of noise. Assuming a sine-wave input waveform, the steepest slope occurs at the zero-crossing point. This is the point selected for triggering with the LEVEL control is set to 0 (center). A more positive or negative point on the waveform is selected as the LEVEL control is rotated clockwise or counterclockwise respectively from 0 (toward + or − symbols on panel).

Before setting the trigger level, the desired slope should be selected. Adjust the START LEVEL control to the desired start trigger point. Then adjust the EVENTS LEVEL control to trigger the events pulse either simultaneously or after the start trigger pulse. The relationship between start and events triggering is monitored at the START and EVENTS TRIG VIEW connectors.

Either LEVEL control can be preset to a fixed voltage level by adjusting the front-panel PRESET adjustment. Rotate either LEVEL control fully clockwise (into the detent), and set the PRESET screwdriver adjustment to the desired triggering voltage level.

FRONT-PANEL CONTROLS, CONNECTORS, AND INDICATORS

NOTE

See Fig. 1-3 for location and brief description of front-panel controls, connectors, and indicators.

EVENTS DELAY COUNT Switch

The EVENTS DELAY COUNT switch is a 5 decade, digital readout switch that increases or decreases the count at which a delayed pulse will occur. This switch selects the number of events to be counted. The delay count is displayed on the front-panel switch readout. The DLY'D TRIG OUT signal is delayed 1 count more than the EVENTS DELAY COUNT switch setting; that is, a switch setting of 00000 will count 1 event pulse, or a switch setting of 99999 will count 100,000 event pulses to produce a DLY'D TRIG OUT pulse.

INPUT Connectors

Individual front-panel connectors are provided for connecting the external trigger signals to the EVENTS and START trigger preamplifiers.

EVENTS and START SLOPE Switches

Determine the amplitude point on the trigger signal at which the circuit triggers. In the fully clockwise detent position, the circuit triggers at the amplitude point on the trigger signal selected by the PRESET screwdriver adjustment.

LEVEL IN/OUT Connectors

Individual front-panel pin jacks are provided to monitor the EVENTS and START dc level at which the triggering occurs.

EVENTS TRIG'D Indicator

Provides a visible indication that the Events circuit has received a trigger, and that an adequate trigger signal is applied.

START TRIG'D Indicator

Provides a visible indication that the Start gate circuit has received a trigger, and is open, ready for the events count to begin.

RESET Pushbutton

A front-panel RESET button is provided to clear the EVENTS counter and reset the START circuit. The next START pulse will restart the EVENTS count at 00001. The RESET pushbutton allows the operator to reset the counter and start circuit when in long term count cycles or when a false trigger occurs.

Digitally signed by
http://www.aa4df.com

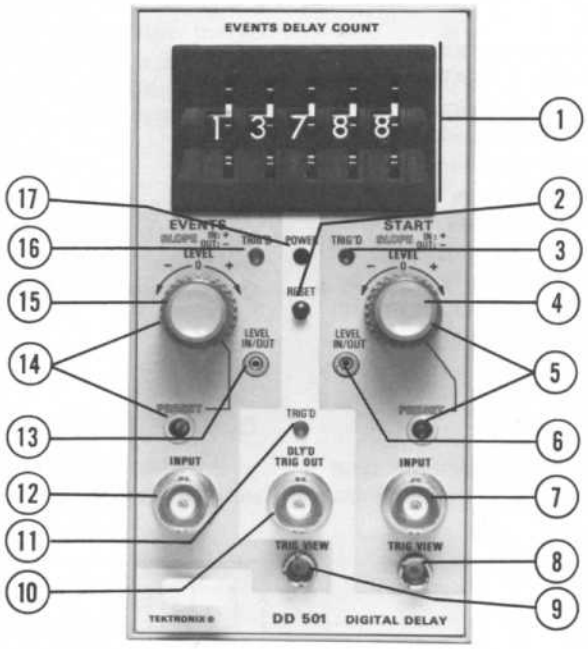

(1) **EVENTS DELAY COUNT.** Selects number of events to be counted.

(2) **RESET.** Restarts count cycle.

(3) **TRIG'D.** Indicates START gate triggering.

(4) **SLOPE.** Selects START trigger polarity.

(5) **LEVEL and PRESET.** Selects the amplitude point on the trigger signal where the START circuit triggers. Allows trigger point to be preset (screwdriver adjustment) when LEVEL control is in fully clockwise detent position.

(6) **LEVEL IN/OUT.** Provides an output to monitor the dc level at which the START trigger occurs.

(7) **INPUT.** Provides a means of connecting the external trigger signal to the START trigger preamplifier.

(8) **TRIG VIEW.** Allows viewing of shaped trigger pulses to START latch circuit.

(9) **TRIG VIEW.** Allows viewing of shaped trigger pulses to EVENTS counting circuit.

(10) **DLY'D TRIG OUT.** Provides an output of the delayed trigger pulses.

(11) **TRIG'D.** Indicates a delayed trigger output has occured.

(12) **INPUT.** Provides a means of connecting the external trigger signal to the EVENTS trigger preamplifier.

(13) **LEVEL IN/OUT.** Provides an output to monitor the dc level at which the EVENTS trigger occurs.

(14) **LEVEL and PRESET.** Selects the amplitude point on the trigger signal where the EVENTS circuit triggers. Allows trigger point to be preset (screwdriver adjustment) when LEVEL control is in fully clockwise detent position.

(15) **SLOPE.** Selects EVENTS trigger polarity.

(16) **TRIG'D.** Indicates EVENTS circuit has received a trigger.

(17) **POWER.** Pilot Light indicates power applied.

1818-7

Fig. 1-3. DD 501 front panel controls and connectors.

TRIG VIEW Connectors

Individual front-panel probe-tip connectors are provided for monitoring the EVENTS and the START trigger pulse waveforms. The TRIG VIEW output signals are a representation of the input trigger signals repetition rates. The TRIG VIEW output pulse width is determined by the input waveshape and the triggering voltage level. For example, the sinewave EVENTS INPUT signal, triggered at the amplitude point shown in Fig. 1-4, produces an output trigger width of 5 microseconds. Consequently, varying the trigger amplitude point on the input waveform will vary the output pulse width proportionally.

DLY'D TRIG OUT Connector

Provides a means of applying the shaped delayed trigger pulses to associated equipment. Output signals are generated as positive-going rectangular pulses coincident with the end of the delay interval. The DLY'D TRIG OUT pulse width will be identical to the Schmitt-trigger pulse width, which can be monitored at the front-panel TRIG VIEW connector.

The display shown in Fig. 1-5 illustrates the relationship between the EVENTS INPUT signal, TRIG VIEW pulse, and the DLY'D TRIG OUT pulse, with the EVENTS DELAY COUNT switch set at 00002.

DELAYED TRIG'D Light

Provides a visible indication when a delayed trigger output has occurred.

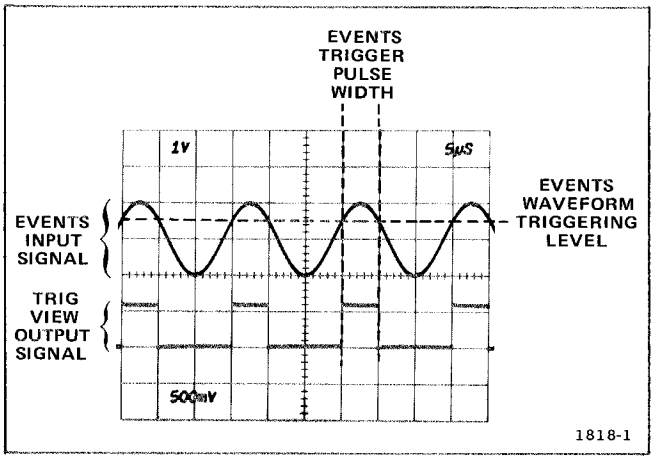

Fig. 1-4. Delayed output pulse width vs. events input-signal trigger voltage level.

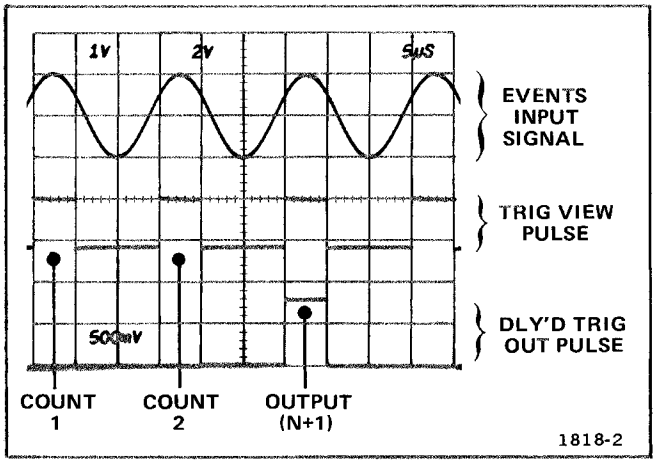

Fig. 1-5. Time and pulse-width relationships between input and output signals.

SPECIFICATION

INTRODUCTION

The following electrical characteristics are valid over the stated environmental range for instruments calibrated at an ambient temperature of +20°C to +30°C, and after a 5-minute warmup unless otherwise noted.

Limits and tolerances given in the Supplemental Information column are provided for user information only, and should not be interpreted as Performance Requirements.

TABLE 2-1

Electrical Characteristics

Characteristic	Performance Requirement	Supplemental Information
EVENTS and START		
Input Resistance and Capacitance		1 MΩ paralleled with 20 pF (variable)
Slope	+ or −, selectable	
Sensitivity	85 mV p-p minimum at 30 MHz; 120 mV p-p minimum at 65 MHz.	
Trigger Level Range	−1.0 V to +1.0 V	
Frequency Response	0 to 65 MHz	
Pulse Width (minimum)	5 ns	
TRIG VIEW Output	At least 0.5 V	Permits viewing of all shaped triggers
Source Impedance		200 Ω or less
Trigger LEVEL IN/OUT Monitor Jack		Probe-tip jack—allows monitoring comparator voltage of preset or trigger level to within 25 mV.
Source Impedance		Approximately 1 kΩ
TRIG'D Indicator		
EVENTS	Visual indication of triggering	
START	Visual indication that start gate is open	
LEVEL Controls		
0 Volt Trigger Level		Within 30° of mechanical zero
START Pulse Lead Time		Simultaneous or ahead of the EVENTS pulse
Recycle Time	50 ns or less	Paralleling START and EVENTS INPUTS determines maximum ÷ N + 1 frequency

Table 2-1 (cont)

Characteristic	Performance Requirement	Supplemental Information
RESET	Resets start gate and events counter circuits	
EVENTS		
Delay Count Range	0 to 99999	
Throughput Time	30 ns or less	
Delayed Trigger Out		
Pulse Width (max)		Up to 6 ns greater than the events pulse width
Amplitude	At least 1 V into 50 ohms	From +0.8 to +2.2 V into 3 TTL loads (approximately 5 mA)
Source Impedance		Logic 1 approximately 50 ohms Logic Ø approximately 200 ohms
TRIG'D Indicator	Indicates trigger out	

Physical Characteristics

Size	Fits all TM 500-Series power module plug-in compartments. (See Fig. 2-1.)	
Weight	716.5 grams (1.58 pounds)	

Environmental Characteristics

Refer to the specification for the associated power module.

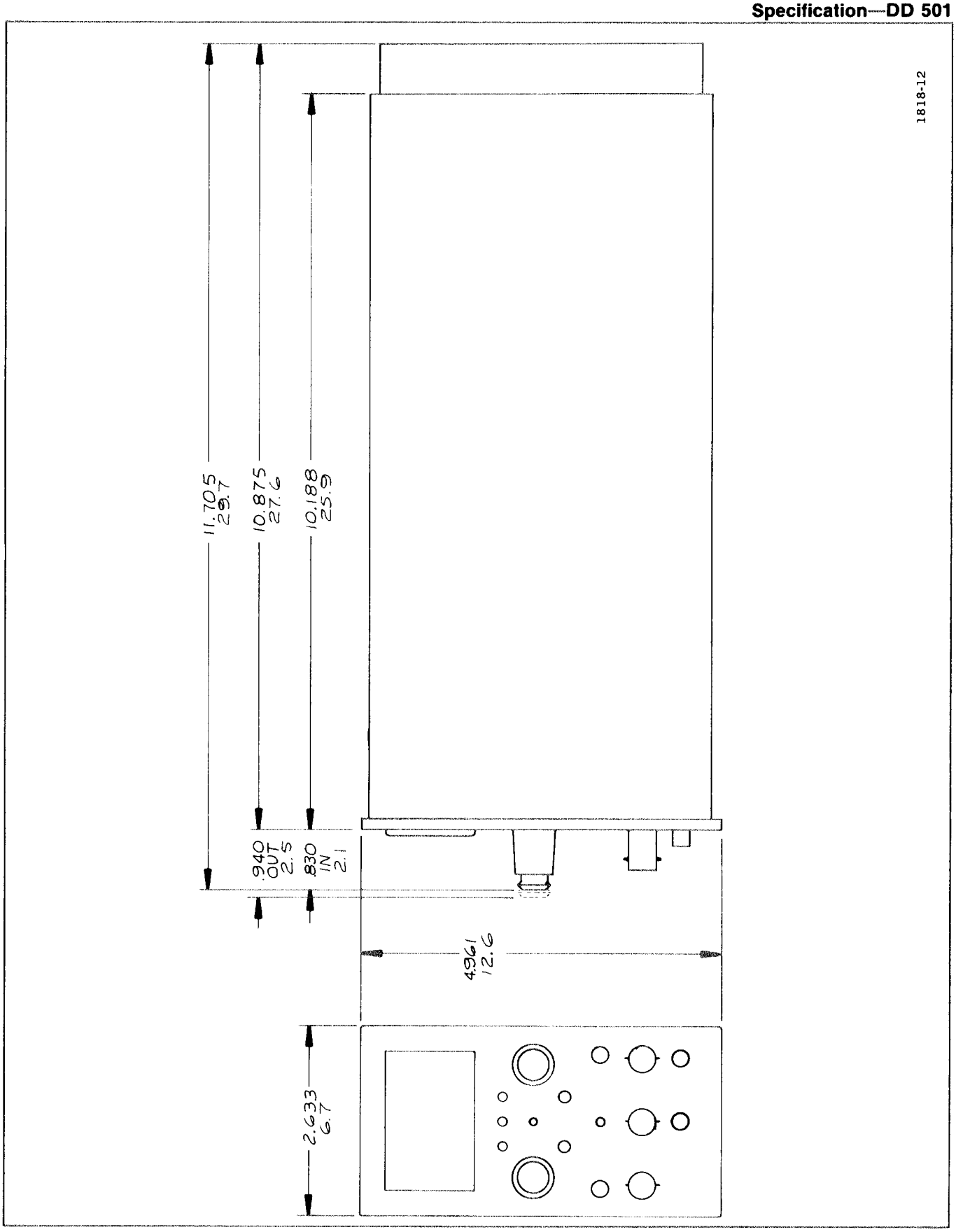

Fig. 2-1. DD 501 Dimensional Drawing.

THEORY OF OPERATION

INTRODUCTION

This section of the manual describes the circuitry used in the DD 501 Digital Delay. The description begins with a discussion of the instrument, using the block diagram shown in Section 7. Next, each major circuit is described, using the block diagram to show the relationship between stages in each major circuit. Detailed schematics of each circuit are located in the Diagrams section at the back of this manual; refer to these schematics throughout the following circuit description for specific electrical values and relationships.

BLOCK DIAGRAM DESCRIPTION

Trigger Circuit

The function of each block in the Events trigger circuit is identical to the function of the Start trigger circuit, therefore, only the Start portion of the Trigger circuit will be discussed.

A Start trigger signal is connected from an external source to the Start INPUT connector J120. The Start Trigger Preamp presents a high-impedance input and low-impedance output to the input trigger signal.

The low-impedance output trigger from the Start Trigger Preamp drives the Start Trigger Level Comparator. The front-panel LEVEL control in the comparator circuit selects a dc reference point on the trigger waveform. The dc reference voltage selected triggers the Start Schmitt Trigger circuit. The front-panel SLOPE switch selects the positive- or negative-going slope on the Schmitt square-wave trigger for the dc reference point.

Counter Circuit

The first trigger pulse to reach the Start Trigger enables the Least Significant Digit Counter circuit. This allows the counter to start counting the events pulses from the Events Delay circuit.

The EVENTS DELAY COUNT switch setting determines the number of events pulses to be counted. Assume an EVENTS DELAY COUNT switch setting of 00010 in the following discussion. The switch setting of 00010 programs the counters to 99989. After the first events pulse the four most significant digits are stored in the Most Significant Digits Latch. The Most Significant Digits Counter Reset generates a 50 nanosecond pulse and resets the Most Significant Digits Counters. After 10 events pulses have been counted, the counters will be set at 99999. The eleventh events pulse transfers one count through the Final Count Detector to the Dly'd Trig Output Amplifier and resets the Least Significant Digit Counter. The Final Count Detector resets the Most Significant Digits Latch and the Start Trigger Gate. The counters and latches are now reset to 99989, ready to begin another count.

The Manual Reset circuitry allows the operator to clear and reset all counters and latches with a front-panel switch during a count cycle.

Power Supply and Triggering Indicator

The Start Trigger Lamp Multi is a 50 millisecond multivibrator which performs two functions. It allows the START TRIG'D indicator to remain on long enough for viewing during high-frequency start pulses and holds the START TRIG'D indicator on whenever the Start Trigger Gate is open.

The Events Delay circuit enables the Events Trigger Lamp Multi (50 millisecond multivibrator) to drive the EVENTS TRIG'D indicator.

The count output pulse from the Final Count Detector is amplified in the Dly'D Trig'd Output Amplifier. The Dly'd Trig'd Lamp Multi is a 50 millisecond multivibrator that enables the Dly'd Trig'd Lamp Driver to remain visible during high-frequency pulse output signals.

The +5 Volt Regulator supplies power for all integrated circuits and the POWER indicator.

The −15 Volt Regulator supplies power for all other circuit functions.

CIRCUIT OPERATION

Introduction

This section provides a detailed description of the electrical operation and relationship of the circuits in the DD 501. The theory of operation for circuits unique to this instrument is described in detail in this discussion. Circuits which are commonly used in the electronics industry are not described in detail. If more information is desired on these commonly used circuits, refer to the following textbooks:

Gordon V. Deboo, "Integrated Circuits and Semiconductor Devices", McGraw-Hill, New York, 1971.

Lloyd P. Hunter (Ed.), "Handbook of Semiconductor Electronics", third edition, McGraw-Hill, New York, 1970.

Jacob Millman and Herbert Taub, "Pulse, Digital, and Switching Waveforms", McGraw-Hill, New York, 1965.

TRIGGER CIRCUIT ◇1

NOTE

The Events input and Start input Trigger circuits are identical. Refer to the block diagram. Only the Start Input Trigger circuit is described in detail throughout the Trigger circuit discussion.

Start Trigger Preamp

Source followers Q128A, Q128B (matched FET's) and emitter follower Q130 compose this stage. Input signals to the preamp are dc coupled with a 1 megohm input resistance. Input protection diodes CR123 and CR126 clamp the gate of Q128A when the signal at the input connector exceeds approximately + or −5 volts. The dc level on the base of Q130 is set by Input Zero Set adjustment R129. The trigger output of Q130 provides drive to the base of trigger level comparator Q135.

Start Trigger Level Comparator

Differential comparator Q135, Q140 and emitter follower Q160 compose this stage. Trigger signals from Q130 drive the base of Q135. A dc reference voltage, established by divider network R166, R167, R168, and R169, is fed through LEVEL control R170 (or with R170 set fully clockwise into detent, through PRESET control R175) to the base of emitter follower Q160. The output of Q160 drives the base of Start Trigger Level Comparator Q140. The dc reference voltage level at the base of Q140 determines the dc voltage point on the signal at the base of Q135 where the Start Schmitt, U144B, will generate a trigger. The LEVEL in/out pin jack allows the dc trigger point to be monitored externally.

Start Schmitt Trigger

Push-pull Schmitt Trigger U144B comprises this stage. Trigger signals are coupled from Q135 and Q140 to pins 9 and 10 of U144B. Input sensitivity (hystersis) is established by resistor pairs R136, R144, R142, and R146. Resistors R144 and R146 provide feedback for U144B. The output from Schmitt trigger U144B provides drive to the inputs of slope selectors U144A and U144C.

Slope Selector

Signal gates U144A and U144C compose this stage. Pin 11 of U144A supplies a HI state signal to SLOPE switch S170. The minus slope output from pin 2 of U144A will occur only when pin 4 of U144A is at a HI state. The plus slope output from pin 15 of U144C will occur only when pin 13 of U144C is at a HI state.

The positive output signals from U44A and U44C drive the Events Trigger Delay circuit, pins 6 and 7 of U280B (SN B020530-up: Count Gate circuit, pin 5 of U273).

The positive output signals from U144A and U144C drive the Start Trigger Gate (pin 6 of U230A).

The TRIG VIEW connectors allow viewing of trigger outputs from the SLOPE switch.

COUNTER CIRCUIT ◇2 (SN B020530-up)

Block Description

As shown in Fig. 3-1, the method used to count Events is to pre-load the 9's complement of the desired event number into a set of counters, then increment the counters until each counter contains a 9. As an example, if it is desired to provide a delayed trigger output at the 4,512th Event after the selected Start pulse, the thumbwheels are set to 4512, but the BCD output from the thumbwheels into the counters would be 99999 − 04512 = 95487.

Three things are necessary to start the counters operating; a Start pulse, an Event pulse, and the RESET button must be pressed. Once the counters have been started, a new count cycle is initiated on the first Start pulse after the counters have reached the desired count.

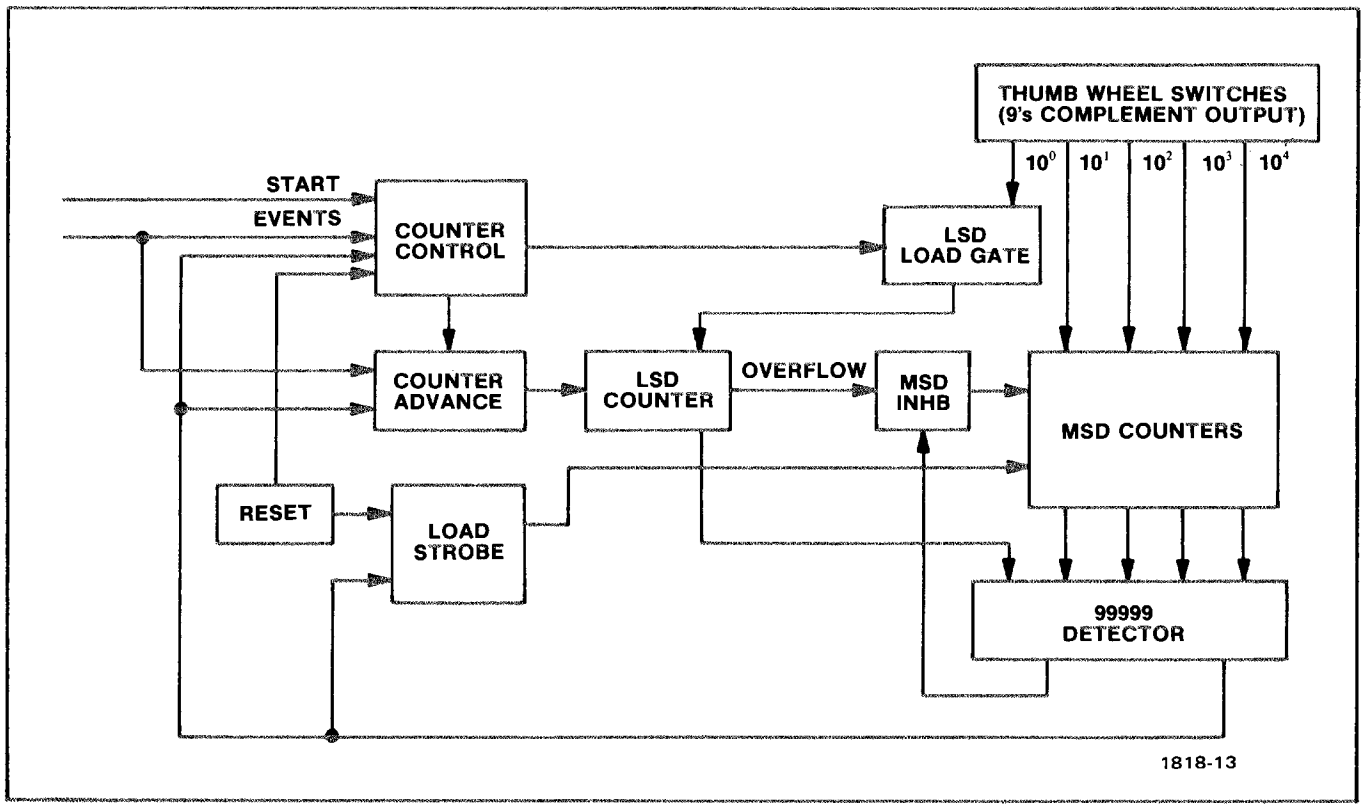

Fig. 3-1. Counter Control Block Diagram.

When the RESET button is pressed, the Load Strobe circuitry goes active and loads the thumbwheel outputs into the four MSD counters. Pressing RESET also activates the Counter Control circuitry to the extent that the Counter Advance circuitry is activated, but the LSD load gates are not activated on the first counting cycle after the RESET button is pressed. During the first counting cycle, the number existing in the LSD countar at the time the RESET button is pressed is repeatedly incremented and the overflows increment the four MSD counters until the count in the MSD counters is 9999. At that point, the 99999 Detector circuitry inhibits any more overflows from the LSD counter to the MSD counters. The MSD thumbwheel outputs are now re-loaded into the MSD counters. The LSD counter continues to count Events until its count reaches 9; at this point the 99999 Detector circuitry signals the Counter Control circuitry to activate the LSD Load Gates to load the proper LSD. Thus, during the first counting cycle, the Delayed Trigger output can be off by as much as 8 events, but at the end of the first counting cycle after the RESET button is pressed, the correct number is loaded into the LSD counter and all following counting cycles will deliver a delayed trigger pulse when the desired triggering event is reached.

Logic Description

When the RESET button is pressed, flipflop U230A (see Fig. 3-2) is reset and the low from its Q output inhibits AND gate U273A. Nothing more happens until a Start pulse is received at the clock input of U230A. When the start pulse is received, U230A sets with its Q output going high. AND gate U210B remains inhibited because the 99999 Detector output from U210C is low, so flipflop U230B and the rest of the LSD Load circuitry remains inhibited during the first counting cycle after the RESET button is pressed. However, note that when U230A is set by the Start pulse, AND gate U273A is activated on each Event pulse and increments LSD counter U271 through AND gate U273B as long as 99999 is high (99999 remains high until all the counters are incremented to 9, or 1001 in BCD). Thus, during the first counting cycle after the RESET button is pressed, the Counter circuitry is incremented, but LSD Counter U271 does not get loaded with the 9's complement from the LSD thumbwheel. The first count cycle can be off by as much as 8 counts.

At the end of the first count cycle, the 99999 Detector activates AND gate U210B pin 6 (U230A has remained set since the Start pulse was received and is holding a high on U210B pin 7). With both of its inputs high, U210B is activated and the high from its output on pin 3 puts a high on the D inputs of flipflops U230B and U274. When the next Event pulse arrives, both flipflops set. The Q output of U230B clocks flipflop U232B, which sets. The Q output of U274 resets U230A, and inhibits U210B. At the same time, the Q output of U274 causes U274 to reset itself. The

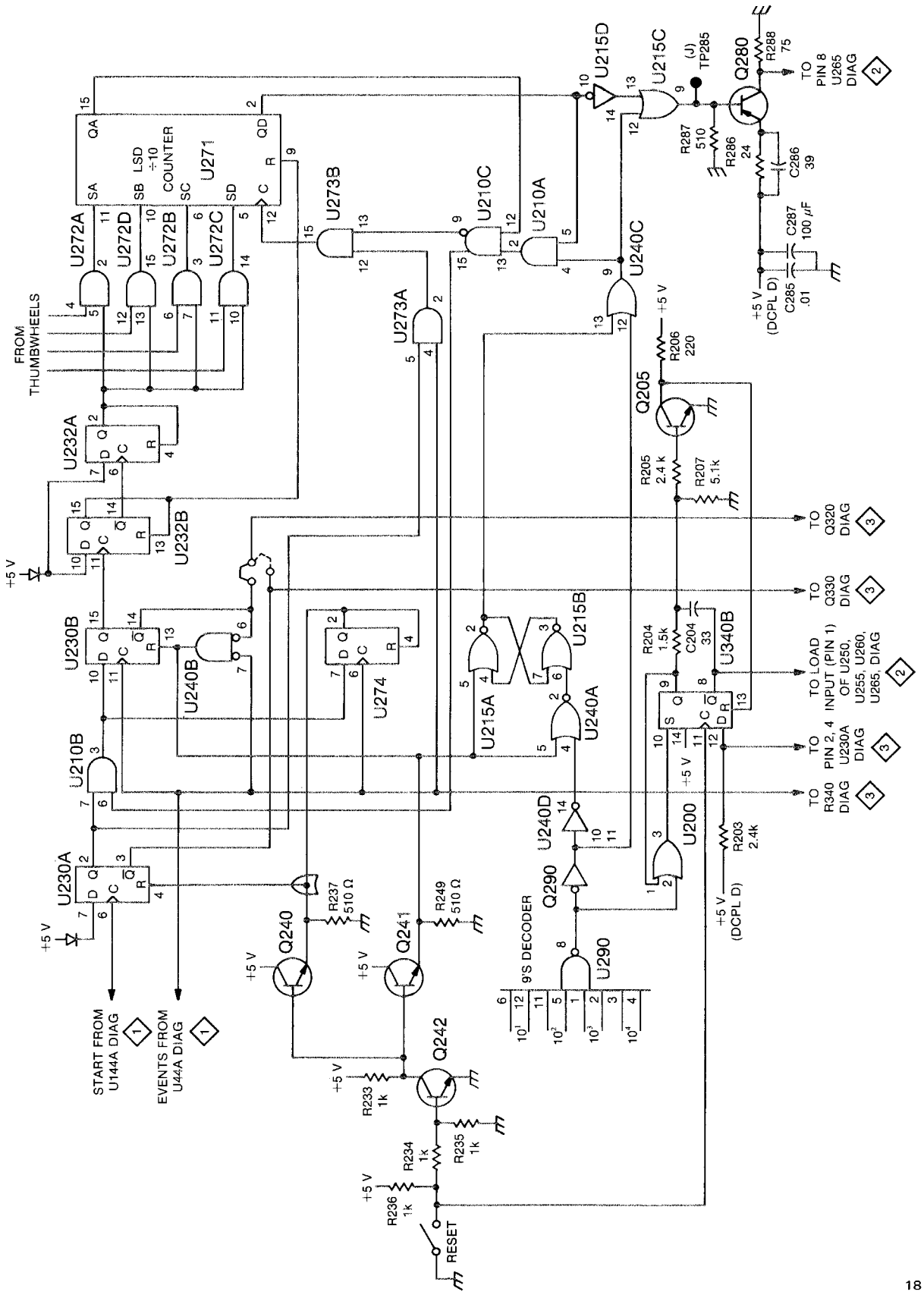

Fig. 3-2. Counter Control Logic Diagram.

instant that the Event pulse goes low, U230B is reset by its own low Q output and the low Event signal, through NAND gate U240B.

When flipflop U232B is set by an Event pulse as explained in the preceding paragraph, it promptly resets itself with the high from its Q output. As it resets, the positive-going edge from its Q output sets flipflop U232A, which, in turn, activates the LSD Load gates in U272. U232A promptly resets itself with its own Q output, but has remained set long enough to load the LSD counter.

With the arrival of the second Start pulse, flipflop U230A again sets and enables AND gates U273A and U273B to pass the Event pulses to the LSD counter. This counting cycle and all following cycles (until RESET is again pressed) starts with the correct 9's complement loaded into the LSD counter.

When the count in the LSD counter reaches 1000_2, the output on pin 2 of U271 goes high (see Fig. 3-2). The high from U271 pin 2 is inverted to a low by U215D and is applied to one input of OR gate U215C. Since the 9's decoder has not detected all 9s, its output is high, which causes pin 12 of U240C to be low; pin 13 of U240C is held low by flipflop U215A/B at this time. Therefore, the other input to U215C is a low from U240C, so the output of U215C goes low and biases transistor Q280 on. The output of U271 pin 2 remains high for 2 Events, then goes low; the resulting negative-going signal at the collector of Q280 increments U265, the 10^1 counter.

As each counter overflows, it increments the next. When the count reaches 99999, the output of U290 pin 8 goes low. The low from U290 causes the output of OR gate U200 to go low and set flipflop U340B. The Q output of U340B goes low and re-loads the thumbwheels into the four MSD counter. (After a delay determined by C204, transistor Q205 resets U340B.) The low from U290 is also inverted by Q290 and applied through inverter U240D to one input of NOR gate U240A. With lows on both its inputs, the output of U240A pin 2 goes high and resets the flipflop consisting of U215A and U215B. The output of U215A pin 2 goes high and (through OR gate U240C) activates AND gate U210A. The output of U210A pin 2 activates AND/NAND gate U210C, which firstly inhibits U273 and stops the Events from incrementing the LSD counter, and secondly enables AND gate U210B. U210B is now activated and the LSD is re-loaded as previously explained.

When U210B is activated, it puts a high on the D inputs of U230B and U274. U274 resets U230A and thereby removes the activating input from U210B. The Q output of U230B causes the LSD from the thumbwheels to be loaded into U271 as previously explained. The Q output of U230B activates negative-input NAND gate U240B, whose output resets the flipflop consisting of U215A and U215B. The output of U240B also resets U230B.

With the counters re-loaded, the output of 99999 Detector U290 goes high. The high from U290, after inversion by Q290, removes the activating inputs from OR gate U240C and AND gate U210A. As a result, the inverted output of U210C goes high and enables U273D to pass Event pulses to increment the LSD counter. With the arrival of the next Start and Event pulses, AND gates U273A and U273D are again activated and pass the Event pulses to increment the LSD counter. Fig. 3-3 is a timing diagram of the events that occur during the processing of a count.

COUNTER CIRCUIT ◇2◇ (SN B020529 and below)

Start Trigger Gate

Flipflop U230A comprises this stage. A HI state at pin 4 of U230A produces a HI on pin 3 and disables counter U270. A plus trigger at pin 6 of U230A produces a LO on pin 3, thereby enabling counter U270 and inverter Q330.

Events Delay

Inverter U280B, NOR gate U280A and OR gate U280C compose this stage. Positive-going triggers from U44A or U44C drive pins 6 and 7 of U280B. A LO from pin 3 of U280B drives pin 4 of U280A and inverter Q320. Pin 5 of U280A is normally LO and is driven HI during counter reset. When pin 4 of U280A is LO, pin 12 of U280C is driven HI allowing the HI output from pin 9 to enable U240B, and U270 starts counting.

The overall delay through this stage is approximately 6 nanoseconds to ensure that the start trigger has occurred before the events are counted.

Least Significant Digit Counter

Programmed decade counter U270 comprises this stage. Pins 7, 10, and 13 determine the operation of the counter; pin 7 LO to preset, pin 10 LO to enable counting, and pin 13 (during a positive transition) to initiate a count. The front panel thumbwheel switch, S410E, loads the program input to pins 5, 6, 11, and 12 with a 9's complement in binary coded decimal form. The 9's complement of a number can be defined as the value that must be added to the number to yield 9. For example, the 9's complement of 7 is 2. When at a 9 count, pins 3 and 14 of U270 yield HI state outputs.

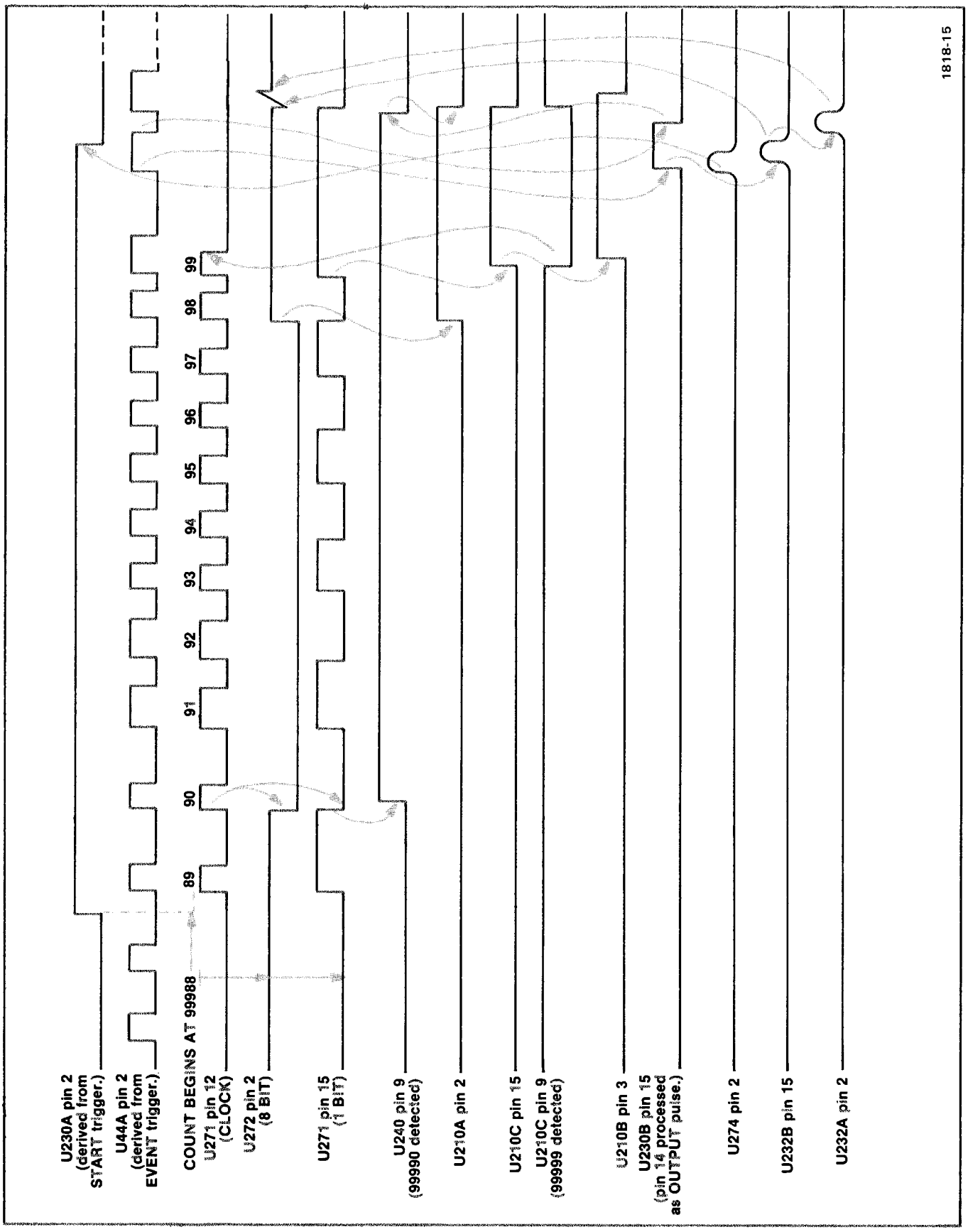

Fig. 3-3. Counter Control Timing.

Least Significant Digit Detector

AND gate U210C, an AND gate with an inverting output compose this stage. This stage detects only the BCD 9 count from the output of counter U270. When the most significant digits have all been counted, or there are none to be counted, pin 4 of U210A is driven HI. At an 8 count, pin 5 of U210A is driven HI, pin 2 drives pin 13 of U210C HI. At a 9 count pin 12 is driven HI and pin 9 drives pin 7 of U270 LO, thereby enabling pin 7 of the counter. Pin 15 of U210C drives pin 6 of U210B HI.

Carry Gate

Inverter U215D, OR gate U215C, and translator Q280 compose this stage. A LO state enables U215D and the resultant HI output enables pin 13 of U215C. With pin 12 of U215C LO, pin 9 drives the base of Q280 HI. With pin 12 HI, the signals at pin 13 will not pass on to the base of Q280. When the collector of Q280 goes LO, the negative-going LO triggers pin 8 of U265. Q280 takes the ECL level signal from pin 9 of U215C and provides an inverted, TTL compatible signal for U265.

Most Significant Digits Counters

Four programmed decade counters, U250, U255, U260, and U265 compose this stage. All four of the counting devices use pin 1 for preset, and pin 8 to increment the count on a falling (negative-going) LO. The front panel thumbwheel switch, S410A, B, C, D, and E provides the preset inputs to pins 4, 10, 3, and 11 with a 9's complement in binary coded decimal form. The 9's complement of a number can be defined as the value that must be added to the number to yield 9. For example, the 9's complement of 7 is 2. A 9 count produces a HI state on all pins 5 and 12.

Most Significant Digits Detector

Eight-input NAND gate U290 comprises this stage. This stage detects the BCD 9 count from the most significant digit counters. One or more inputs of U290 are driven LO by the most significant digits counters will produce a HI state at pin 8. When all inputs of U290 are driven HI, pin 8 of U290 enables pin 2 of U200 and sets the base of Q290 to a LO state.

Most Significant Digits Counter Reset

OR gate U200, monostable multivibrator U340B, and Q205 compose this stage. When U290 drives pin 2 of U200 LO, pin 3 places pin 10 of U340B LO. A HI state pulse from pin 9 of U340B sets pin 1 of U200 HI for approximately 50 nanoseconds, and the U200 50 nanosecond pulse sets pin 10 of U340B HI.

In the quiescent state, the collector of Q205 is HI with pin 9 LO and pin 8 HI of U340B. A positive-going trigger applied to pin 11 of U340B changes pin 8 LO and pin 9 HI. With C204 charged positive at pin 8 (when the change of state occurs) the base of Q205 is placed at approximately −5 volts. With pin 9 HI, C204 is charged positive through R204 with a time constant of approximately 50 nanoseconds. When the junction of C204 and R204 charges to about +0.6 volt, Q205 is turned on. This places pin 13 of U340B LO, and resets U340B to the quiescent state.

Most Significant Digits Latch

Translator Q290, inverter U240D, OR gate U240C, and bistable multivibrator U240A, U215A, and U215B compose this stage. Pin 8 of U290 goes low, thereby setting pin 12 of U240C and pin 10, 11 of inverter U240D HI. Pin 9 of U240C goes to a HI state and enables U215C and U210A. Inverter U240D disables U240A with a LO state at pin 4 of U240A. The output of U240A enables U215B which drives the output of U215B LO and the output of U215A HI. The output of U215A will go LO as the input (pin 5) goes HI.

Final Count Detector

AND gate U210B, NOR gate U240B, and flipflop U230B compose this stage. AND gate U210B is enabled by the HI state output at pin 2 of U230A and pin 15 of U210C, thereby establishing a HI output to pin 10, U230B. Pin 6 of U240B is HI and pin 3 is LO and remains LO until an events trigger pulse drives pin 7 HI and the positive-going pulse triggers pin 11 of U230B. Flipflop U230B output changes state with the positive-going trigger to pin 11, driving pin 14 LO and pin 15 HI. The LO output to Q340 base is the delayed trigger output signal. The HI output from pin 15 of U230B resets start trigger gate U230A. When the negative-going transition of the events trigger pulse from U280C drives pin 7 of U240B LO, pin 3 output drives pin 13 of U230B HI, and resets U230B.

Manual Reset

Translator Q200, inverter U280D and buffer U210D compose this stage. Front panel pushbutton RESET switch S240 grounds LO for manual reset. A LO on pins 10 and 11 of U280D produces a reset pulse to pin 5 of U280A, pin 13 of U280C, pins 10 and 11 of U210D and the base of Q200. As the reset pulse from U280D drives the base of Q200 HI, the collector assumes a LO state. As the collector changes to HI, the positive-going HI triggers pin 11 of U340B. Pins 10 and 11 of U210D are driven HI and pin 14 resets U230A.

POWER SUPPLY & TRIGGER INDICATOR

Start Trigger Lamp Multivibrator

Inverter Q330 and monostable multivibrator U325B and Q335 compose this stage. When the base of Q330 is driven

LO, the collector of Q330 assumes a HI state. The positive-going HI triggers U325B, and drives inverter U327A. A HI state pulse from pin 9 of U325B enables inverter U327C for approximately 50 milliseconds. The collector of Q330 remains HI until start trigger gate U230A is reset.

The quiescent state of multivibrator U325B and Q335 places U325B pin 8 HI and pin 9 LO. Capacitor C337 is charged positive at pin 8. A positive-going trigger to pin 11 changes the state of pin 8 and 9, placing the capacitor charge of approximately −5 volts on the base of Q335. Capacitor C325 charges to +0.6 volt through R337 at a time constant of approximately 50 milliseconds. The +0.6 volt charge enables Q335 and resets U325B to the quiescent state.

Start Trigger Lamp Driver

Inverters U327A and U327C compose this stage. A HI output from the collector of Q330 drives U327A and produces a LO output at pin 8. The LO output drives START TRIG'D indicator DS330 via CR337 and R338. The output of U327A remains LO until the collector of Q330 returns to a LO state. A HI output from pin 9 of U325B drives U327C and produces a LO output at pin 3. The LO output drives START TRIG'D indicator DS330 via CR336 and R338 for approximately 50 milliseconds. Diodes CR336 and CR337 provide isolation between the outputs of U327A and U327C.

Events Trigger Lamp Multi

Inverter Q320 and monostable multivibrator U325A and Q325 compose this stage. When the base of Q320 is driven LO, the collector of Q320 assumes a HI state. The positive-going HI triggers U325A at pin 3. A HI state pulse from pin 5 of U325A drives the input of U327B for approximately 50 milliseconds.

In the quiescent state, pin 8 of U325A is HI and pin 9 is LO. Capacitor C325 is charged positive at pin 6. A positive-going trigger to pin 3 changes the state of pin 5 and 6, which places the capacitor charge of approximately −5 volts on the base of Q325. Capacitor C325 charges to +0.6 volt through R326 at a time constant of approximately 50 milliseconds. The +0.6 volt charge enables C325 and resets U325A to the quiescent state.

Events Trigger Lamp Driver

Inverter U327B comprises this state. Input pins 4 and 5 are driven HI by U325A. Output pin 6 drives the EVENTS TRIG'D indicator DS320 LO.

Delayed Trigger Output Amplifier

Amplifier Q340 and emitter follower Q345 compose this stage. The delayed trigger pulse from U230B drives the base of Q340 LO. The collector of Q340 drives the base of Q345 HI. The resultant Q345 emitter HI state triggers U340A through pin 3 and a positive delayed trigger pulse is fed to J345.

Delay Trigger Lamp Multi

Monostable multivibrator U340A and Q348 compose this stage. A positive-going HI from Q345 triggers U340A at pin 3. The resultant HI output from pin 5 of U340A drives the input of U327D for approximately 50 milliseconds.

In the quiescent state, pin 6 of U340A is HI and pin 5 is LO. Capacitor C347 is charged positive at pin 6. A positive-going trigger to pin 3 changes the state of pins 5 and 6, which places the capacitor charge of approximately −5 volts on the base of Q348. Capacitor C347 charges to +0.6 volt through R346 at a time constant of approximately 50 milliseconds. The +0.6 volt charge enables Q348 and resets U340A to the quiescent state.

Dly'd Trig'd Lamp Driver

Inverter U327D composes this stage. Input pins 12 and 13 are driven HI by U340A. Output pin 11 drives DLY'D TRIG'D indicator DS340 LO.

+5 Volt Regulator

Monolithic voltage regulator U360 and crowbar (shorting device) Q366 compose this stage. Voltage regulator U360 provides an internal reference voltage at pin 6. The output voltage at pin 10 is determined by voltage divider R360 and R362 that sets the comparator input at pin 5. The output voltage from pin 10 is applied to the base of the series-pass transistor located on the mainframe of the power module.

The +5 volt output is sensed at the comparator, pin 4, which regulated the supply. Excessive current through R363 will limit current flow through the series-pass transistor if the voltage drop across pins 2 and 3 exceeds 0.6 volt. Over-voltage protection for the integrated circuits is provided by Q366 and VR366. Should the output voltage exceed +6.2 volts, VR366 will conduct and enable Q366 to open fuse F366.

−15 Volt Regulator

Monolithic voltage regulator U380 and crowbar (shorting device) Q386 compose this stage. Voltage regulator U380 has a reference voltage divider R380 and R382 at pin 5. Voltage divider R384 and R383 provide one-half the reference voltage to the comparator at pin 4. The output voltage is applied to the base of the series-pass transistor located in the mainframe of the power module. Output over-voltage protection is provided by Q386 and VR386. Should the output voltage exceed +20 volts, VR386 will conduct and enable Q386 to open fuse F386.

MAINTENANCE

INTRODUCTION

This section of the manual contains maintenance information applicable only to the DD 501. General system maintenance procedures are provided in the Power Module instruction manual, i.e., preventive maintenance, troubleshooting aids, parts removal and replacement procedures, parts ordering information, etc.

SERVICES AVAILABLE

Tektronix, Inc. provides complete instrument repair and calibration at local Field Service Centers and at the Factory Service Center. Contact your local Tektronix Field Office or representative for further information.

FUSE REPLACEMENT

TABLE 4-1

Fuse Ratings

Circuit	Rating	Function	Location
F366	2 A Fast	+5 Volts	Rear of circuit board
F386	0.5 A Fast	−15 Volts	Rear of circuit board

SEMICONDUCTOR REPLACEMENT

Periodic checks of the semiconductors in the DD 501 are not recommended. The best check of semiconductor performance is actual operation in the instrument; however, if it should become necessary to remove or replace the input FET's, Q28A and Q28B for the events input, or Q128A and Q128B for the start input, both transistors of the pair should be removed or replaced as a unit.

More details on checking semiconductor operation are given in the Power Module instruction manual.

TABLE 4-2

Rear Connector Pin Assignments

Pin Number	Left (A)	Right (B)
14 — 28	Not assigned	
12 — 13	See note below	
11	Base of PNP Series Pass	Collector of PNP Series Pass
10	Emitter of PNP Series Pass	
9	See note below	
8	−33.5 V filtered dc	−33.5 V filtered dc
7	Emitter of NPN Series Pass	Collector of NPN Series Pass
6	Base of NPN Series Pass	
5	See note below	
4	+11.5 V common return	+11.5 V common return
3	+11.5 V common return	+11.5 V common return
2	+11.5 V filtered dc	+11.5 V filtered dc
1	See note below	

NOTE: Not used by the DD 501. See Power Module manual for assignments.

PERFORMANCE CHECK/CALIBRATION

PRELIMINARY INFORMATION

Calibration Interval

To ensure instrument accuracy, check the calibration of the DD 501 every 1000 hours of operation, or every 6 months if used infrequently. Before complete calibration, thoroughly clean and inspect this instrument as outlined in the Maintenance section of the TM 500-Series Power Module manual.

Tektronix Field Service

Tektronix, Inc. provides complete instrument repair and recalibration at local Field Service Centers and the Factory Service Center. Contact your local Tektronix Field Office or representative for further information.

Using This Procedure

Index. To aid in locating a step in the procedure, an index is given preceding the Performance Check/Calibration procedure.

Calibration. Completion of each step of the Performance Check/Calibration procedure ensures that the instrument is correctly adjusted and performing within all given tolerances. Where possible, instrument performance is checked before an adjustment is made. For best overall performance when performing a complete calibration, make each adjustment to the exact setting, even if the CHECK— is in tolerance.

Performance Check. The performance of this instrument can be checked without removing the covers or making internal adjustments by omitting the first four steps of the procedure.

Test Equipment Required

The test equipment and accessories listed in Table 5-1, or equivalent, are required for complete calibration of the DD 501. Specifications given for the equipment are the minimum necessary for accurate calibration. Therefore, the equipment used must meet or exceed the listed specifications. Detailed operating instructions for the test equipment are not given in this procedure. Refer to the appropriate instruction manual if more information is needed.

If only a Performance Check is to be performed, not all of the listed test equipment is required. Items used only for calibration are indicated by footnote 1. The remaining pieces of equipment are common to both procedures.

Special Calibration Fixtures. Special Tektronix calibration fixtures are used only where they facilitate instrument calibration. These special calibration fixtures are available from Tektronix, Inc. Order by part number through your local Tektronix Field Office or representative.

Calibration Equipment Alternatives. All of the listed test equipment is required to completely check and calibrate this instrument. However, complete checking or calibration may not always be necessary or desirable. The user may be satisfied with checking only selected characteristics, thereby reducing the amount of test equipment actually required.

The Performance Check/Calibration procedure is based on the first item of equipment given as an example. When other equipment is substituted, control settings or calibration setup might need to be altered. If the exact item of equipment given as an example in the Test Equipment Required table is not available, first check the Specifications column carefully to see if any other equipment might suffice. Then check the Usage column to see what this item is used for. If used for a check or adjustment that is of little or no importance to your measurement requirements, the item and corresponding step(s) can be deleted.

TABLE 5-1

Test Equipment Required

Description	Minimum Specifications	Usage	Examples of Applicable Test Equipment
1. Test-oscilloscope system (dual-trace)	Bandwidth, dc to 65 MHz; minimum deflection factor, 50 mV/div; accuracy, within 3%.	Used throughout procedure as a waveform monitor.	a. Tektronix 465 Oscilloscope, with 2 each P6065A, 10X probes. b. Tektronix 7603 Oscilloscope with 7A26 Amplifier, 7B50 Time Base, and 2 each P6053B, 10X Probes.
2. Sine-wave generator	Output frequency range, 50 kHz to 100 MHz; output amplitude range, 0.030 V to 2 V.	Used throughout procedure as signal source.	a. Tektronix Type 191 Constant-Amplitude Signal Generator.
3. Square-wave generator	Output frequency range, 1 kHz to 100 kHz; output amplitude range, 0.5 V to 1 V.	Used throughout procedure as signal source.	a. Tektronix PG 501 Pulse Generator. b. Tektronix FG 501 Function Generator.
4. Digital counter	Frequency range, 0 to 1 MHz; accuracy, ±1 count. Capable of ratio measurement.	Delay count accuracy check.	a. Tektronix DC 503 Universal Counter.
5. Power module	Tektronix TM 500-Series	Used throughout procedure to supply power to the DD 501.	a. Tektronix TM 503 Power Module.
6. Plug-in extension[1]	Tektronix TM 500- and 5000-Series plug-in extender.	Allows access to internal adjustments and test points in the DD 501.	a. Tektronix Part Number 067-0645-01 Calibration Fixture.
7. Input RC normalizer	Time constant, 1 MΩ X 20 pF; connector, BNC.	Used to normalize the start and events input RC product.	a. Tektronix Part Number 067-0538-00 Calibration Fixture.
8. Dual input coupler	Connectors, BNC; cable lengths, matched within 0.1 inch.	Insertion of identical signals to two inputs simultaneously.	a. Tektronix Part Number 067-0525-00 Calibration Fixture.
9. Termination (2 each)	Impedance, 50 Ω; accuracy, ±2%; connectors, BNC.	Used throughout procedure to properly terminate output signals.	a. Tektronix Part Number 011-0049-01.
10. Adapter	Probe tip to BNC male. Compatible with P6053B and P6065A probes.	Trigger sensitivity check.	a. Tektronix Part Number 013-0084-01.
11. Adapter	T connector; connectors, BNC.	Delay count accuracy check. Recycle rate and throughput time check.	a. Tektronix Part Number 103-0030-00.

[1]**Used for calibration only. NOT used for performance check.**

TABLE 5-1 (cont)

Description	Minimum Specifications	Usage	Examples of Applicable Test Equipment
12. Cable	Impedance, 50 Ω; type, RG-58A/U; length, 18 inches; connectors, BNC.	Used throughout procedure for signal interconnection.	a. Tektronix Part Number 012-0057-01.
13. Cable (2 each)	Impedance, 50 Ω; type, RG-58A/U; length, 18 inches; connectors, BNC.	Used throughout procedure for signal interconnection.	a. Tektronix Part Number 012-0076-00.
14. Alignment tool[1]	Low capacitance.	Adjustment of Input Compensation capacitors.	a. Tektronix Part Number 003-0003-00.
15. Screwdriver[1]	3 inch shaft, 3/32 inch bit.	Adjustment of variable input zero set resistors.	a. Xcelite R-3323.
16. Hex-key wrench[1]	1/16 inch, L type.	Adjustment of LEVEL control knobs.	a. Tektronix Part Number 003-0106-00.

[1]**Used for calibration only. NOT used for performance check.**

INDEX TO PERFORMANCE CHECK/CALIBRATION

Start and Events

1. Adjust Start Trigger Level Zero Page 5-4
2. Adjust Events Trigger Level Zero Page 5-4
3. Adjust Start Input Compensation Page 5-5
4. Adjust Events Input Compensation Page 5-5

Start and Events Triggering

5. Check Trigger Slope Output Page 5-6
6. Check Trigger Level and Preset Range Page 5-6
7. Check Trigger Sensitivity Page 5-6
8. Check Frequency Response and Output Amplitude Page 5-7
9. Check Minimum Input Pulse Width Triggering Page 5-7
10. Check Throughput Time and Recycle Rate Page 5-7
11. Check Delay Count Accuracy Page 5-8

PRELIMINARY PROCEDURE

NOTE

The performance of this instrument can be checked at any ambient temperature within the +20° C to +30° C range unless stated otherwise.

If only the performance is to be checked, disregard step 1, and delete the Plug-In Extension in step 2.

1. Remove both side covers from DD 501.

2. Connect DD 501 to Power Module through Plug-In Extension.

3. Apply power to Power Module. Check that POWER indicator on DD 501 is lit.

4. Set controls as given under Control Settings preceding the desired section. Allow at least 20 minutes warmup before proceeding with the first section.

NOTE

If a malfunction is detected during adjustment, refer to system maintenance in the Power Module instruction manual for troubleshooting techniques, parts removal and replacement procedures, parts ordering information, etc.

Titles for external controls of this instrument are capitalized in this procedure (e.g., RESET). Internal adjustments are initial capitalized only (e.g., Input Zero Set).

START AND EVENTS INPUT

Equipment Required

1. Test oscilloscope system
2. Power module
3. Plug-in extension
4. Sine-wave generator
5. Cable
6. Dual input coupler
7. Square-wave generator
8. Termination
9. Input RC normalizer
10. Alignment tool
11. Screwdriver

Before you begin, see ADJUSTMENT LOCATOR **in the Diagrams section.**

Control Settings

Set the DD 501 controls as follows:

EVENTS DELAY COUNT	00000
EVENTS	
SLOPE	IN: +
LEVEL	0 (midrange)
PRESET	Midrange
START	
SLOPE	IN: +
LEVEL	0 (midrange)
PRESET	Midrange

1. Adjust Start Trigger Level Zero

a. Set the test oscilloscope deflection factor for 50 millivolts/division with 10X probe (dc coupled) and for 10 microseconds/division sweep rate.

b. Set test oscilloscope for ground (0 volt) reference at center graticule line.

c. Connect test oscilloscope 10X probe to START LEVEL IN/OUT pin jack and probe ground strap to chassis ground.

d. Set START LEVEL control to 0.

e. CHECK—That voltage at START LEVEL IN/OUT jack is within 60 millivolts (1.2 divisions) of 0 volt (graticule center).

f. ADJUST—Loosen setscrew in START LEVEL knob and adjust knob to indicate 0 when set for 0 volt at START LEVEL IN/OUT jack.

g. Set the START LEVEL knob for 0 volt dc (within 15 millivolts) at the START LEVEL IN/OUT JACK. Connect a 30 millivolt (peak-to-peak), 50 kilohertz signal from sine-wave generator through a 50 ohm termination and dual-input coupler to EVENTS and START INPUT connectors.

h. Disconnect probe from START LEVEL IN/OUT jack.

i. Set test oscilloscope deflection factor for 500 millivolts/division with 10X probe.

j. Connect 10X probe to START TRIG VIEW connector.

k. CHECK—For square-wave display with START LEVEL control still set to 0.

l. ADJUST—Start Input Zero Set adjustment (R129) for symmetrical square wave at START TRIG VIEW connector.

m. Disconnect all signal connections from DD 501.

2. Adjust Events Trigger Level Zero

a. Set test oscilloscope deflection factor for 50 millivolts/division with 10X probe (dc coupled) and for 10 microseconds/division sweep rate.

b. Set test oscilloscope for ground (0 volt) reference at center graticule line.

c. Connect test oscilloscope 10X probe to EVENTS LEVEL IN/OUT pin jack and probe ground strap to chassis ground.

d. Set EVENTS LEVEL control to 0.

e. CHECK—That voltage at EVENTS LEVEL IN/OUT jack is within 60 millivolts (1.2 divisions) of 0 volt (graticule center).

f. ADJUST—Loosen setscrew in EVENTS LEVEL knob and adjust knob to indicate 0 when set for 0 volt at EVENTS LEVEL IN/OUT jack.

g. Set the EVENTS LEVEL knob for 0 volt (within 15 millivolts) at the EVENTS LEVEL IN/OUT jack. Connect a 30 millivolt (peak-to-peak), 50 kilohertz signal from sine-wave generator through a 50 ohm termination and dual-input coupler to EVENTS and START INPUT connectors.

h. Disconnect probe from EVENTS LEVEL IN/OUT jack.

i. Set test oscilloscope for 500 millivolts/division sensitivity with 10X probe.

j. Connect 10X probe to EVENTS TRIG VIEW connector.

k. CHECK—For square-wave display with EVENTS LEVEL control still set to 0.

l. ADJUST—Events Input Zero Set adjustment (R29) for symmetrical square wave at EVENTS TRIG VIEW connector.

m. Disconnect all signal connections from DD 501.

3. Adjust Start Input Compensation

a. Connect a 1 volt, 500 hertz signal from square-wave generator, through a 50 ohm termination and input RC normalizer to START INPUT connector.

b. Connect 10X probe from test oscilloscope vertical to test point TP130 (L) on Digital Delay circuit board. (Refer to Fig. 7-6.)

c. Set test oscilloscope to display several cycles of signal with approximately 4 divisions of amplitude.

d. ADJUST—Start Input Comp adjustment C122 for optimum square corner and flat top on displayed waveform (use alignment tool).

4. Adjust Events Input Compensation

a. Move input RC normalizer to EVENTS INPUT connector.

b. Move 10X probe to test point TP30 (K) on Digital Delay circuit board. (Refer to Fig. 7-6.)

c. ADJUST—Events Input Comp adjustment C22 for optimum square corner and flat top on displayed waveform (use alignment tool).

d. Disconnect all signal connections from DD 501.

START AND EVENTS TRIGGERING

Equipment Required

1. Test oscilloscope system
2. Power module
3. Sine-wave generator
4. Cable (2 18-inch and 1 42-inch required)
5. Dual input coupler
6. Termination (2 required)
7. Screwdriver
8. Adapter (BNC to probe tip)
9. Digital counter
10. Adapter (BNC T)

Before you begin, see ADJUSTMENT LOCATOR **in the Diagrams section.**

Control Settings

Set the DD 501 controls as follows:

EVENTS DELAY COUNT	00000
EVENTS	
SLOPE	IN: +
LEVEL	0 (midrange)
PRESET	Midrange
START	
SLOPE	IN: +
LEVEL	0 (midrange)
PRESET	Midrange

5. Check Trigger Slope Output

a. Connect a 100 millivolt, 50 kilohertz signal from sine-wave generator through a 50 ohm termination and dual input coupler to EVENTS and START INPUT connectors.

b. Connect 10X probe from test oscilloscope to START TRIG VIEW probe connector.

c. Set START LEVEL control to display a non-symmetrical square wave on test oscilloscope.

d. CHECK—That square-wave display inverts when START SLOPE switch is pulled out (OUT: −).

e. CHECK—That display amplitude is at least 0.5 volt.

f. Move 10X probe to EVENTS TRIG VIEW probe connector.

g. Set EVENTS LEVEL control to display a non-symmetrical square wave on test oscilloscope.

h. CHECK—That square-wave display inverts when EVENTS SLOPE switch is pulled out (OUT: −).

i. Disconnect 10X probe from DD 501.

6. Check Trigger Level and Preset Range

a. Connect a 2 volt, 50 kilohertz signal from sine-wave generator through a 50 ohm termination and dual input coupler to EVENTS and START INPUT connectors.

b. CHECK—That START TRIG'D and DLY'D TRIG OUT TRIG'D indicators extinguish at fully clockwise and counterclockwise positions of START LEVEL control.

c. Set START LEVEL control to PRESET (fully clockwise into detent).

d. CHECK—That START TRIG'D and DLY'D TRIG OUT TRIG'D indicators extinguish at fully clockwise and counterclockwise positions of the PRESET adjustment.

e. Repeat parts b through d for EVENTS LEVEL control and PRESET adjustment.

f. Disconnect all signal connections from DD 501.

7. Check Triggering Sensitivity

a. Set controls as follows:

EVENTS DELAY COUNT	00000
EVENTS	
SLOPE	IN: +
LEVEL	Midrange
START	
SLOPE	IN: +
LEVEL	Midrange

Controls not mentioned can be set as desired.

b. Connect a 120 millivolt, 65 megahertz signal from sine-wave generator through a BNC T connector to START INPUT connector.

c. Connect BNC probe tip adapter through 50 ohm termination to open end of BNC T connector.

d. Connect 10X probe from one vertical channel of test oscilloscope to BNC probe tip adpater. Connect 10X probe from other channel of test oscilloscope to START TRIG VIEW probe connector.

e. Set test oscilloscope to display several cycles of both input signals.

f. CHECK—That START TRIG'D light is on and remains on as START LEVEL control is rotated from fully clockwise to counterclockwise positions. Push RESET button and check that START TRIG'D indicator extinguishes.

g. Set START LEVEL control to display a triggered signal on test oscilloscope crt.

h. CHECK—That START TRIG'D indicator is on and the two displayed sine-wave signals are of equal frequency.

i. Move BNC T connector and associated connections to EVENTS INPUT connector. Move 10X probe to EVENTS TRIG VIEW probe connector.

j. CHECK—That EVENTS TRIG'D light is on when EVENTS LEVEL control is set for triggered display at maximum amplitude on crt.

k. Disconnect all signal connections from DD 501.

8. Check Frequency Response and Output Amplitudes

a. Connect a 120 millivolt, 65 megahertz signal from sine-wave generator through a 50 ohm termination and dual input coupler to START and EVENTS INPUTS connectors.

b. Set EVENTS DELAY COUNT switch to 00000.

c. Connect DLY'D TRIG OUT connector through 50 ohm termination to test oscilloscope vertical input.

d. CHECK—That all TRIG'D indicators are on to indicate proper triggering when EVENTS and START LEVEL controls are set for a triggered display on test oscilloscope. (DLY'D TRIG OUT signal frequency should be half of EVENTS INPUT frequency at 65 megahertz.)

e. CHECK—That amplitude of DLY'D TRIG OUT display on crt is at least 1 volt.

9. Check Minimum Input Pulse Width Triggering

a. Connect a 200 millivolt, 100 megahertz signal from sine-wave generator through a 50 ohm termination and dual input coupler to EVENTS and START INPUT connectors.

b. CHECK—That EVENTS TRIG'D, START TRIG'D, and DLY'D TRIG indicators can be lit simultaneously by setting START and EVENTS LEVEL controls.

c. Disconnect all signal connections from DD 501.

10. Check Throughput Time and Recycle Rate

a. Connect equipment as shown in Fig. 5-1.

b. Set square-wave generator for 0.5 volt, 500 kilohertz output signal.

c. Set START and EVENTS LEVEL controls to produce a delayed trigger output which matches input frequency (monitored on test oscilloscope crt).

d. Center both displays on crt and set sweep rate to 5 nanoseconds/division.

e. CHECK—Time difference between two pulses (at 50% level) for less than 30 nanoseconds. Refer to Fig. 5-2.

f. Disconnect cable from pulse generator and connect to sine-wave generator.

g. Set sine-wave generator for a 1 volt, 20 megahertz output signal.

h. CHECK—That input-to-output frequency ratio can be set to 1:1 using START and EVENTS LEVEL controls.

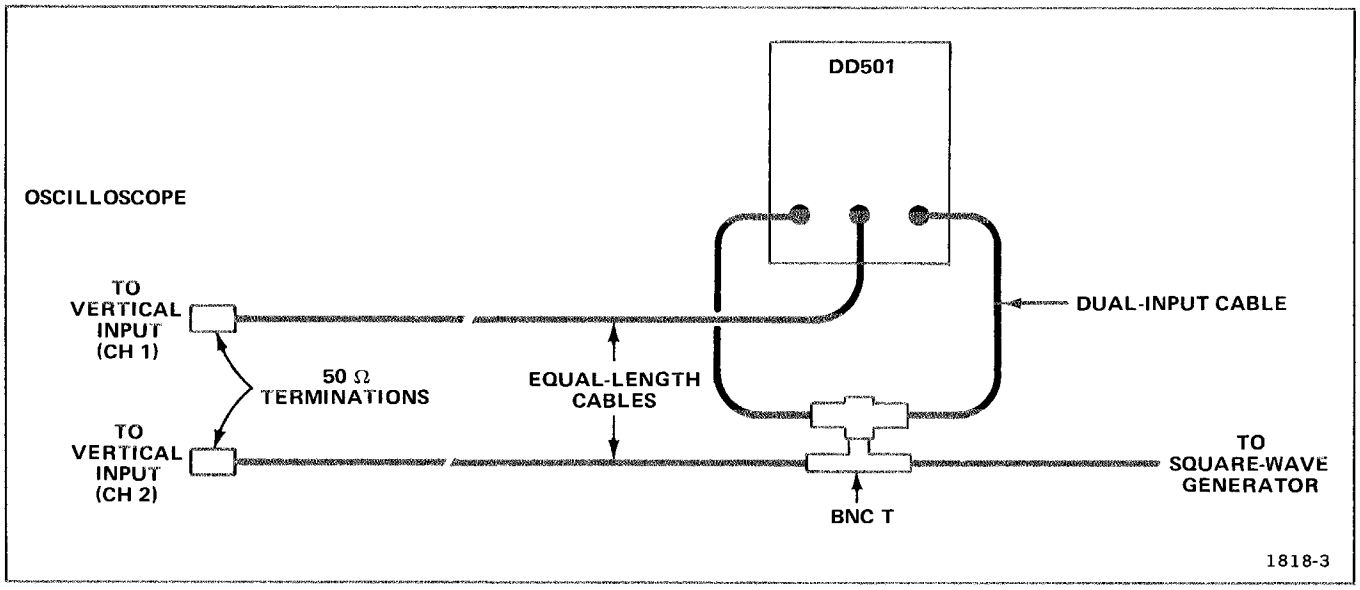

Fig. 5-1. Throughput time test setup.

11. Check Delay Count Accuracy

a. Set controls as follows for DD 501:

EVENTS DELAY COUNT	00000
EVENTS	
SLOPE	IN: +
START	
SLOPE	IN: +

b. Connect equipment as shown in Fig. 5-3.

c. Set sine-wave generator for 0.5 volt, 1 megahertz output signal.

d. Set START and EVENTS LEVEL controls to produce a delayed trigger output as indicated when all TRIG'D indicators are illuminated.

e. Set digital counter to measure ratio (input frequency divided by DLY'D TRIG OUT frequency) between its two inputs.

f. CHECK—That digital counter displays indicated digit plus 1 (i.e., 0 through 9 will display 1 through 10 when least significant digit on EVENTS DELAY COUNT switch is rotated throughout its range (0 through 9). Repeat check for each of 5 decades.

NOTE

If counter display is unstable, set the counter to average the ratio measurement over 10 cycles.

This completes the Performance Check/Calibration Procedure for the DD 501.

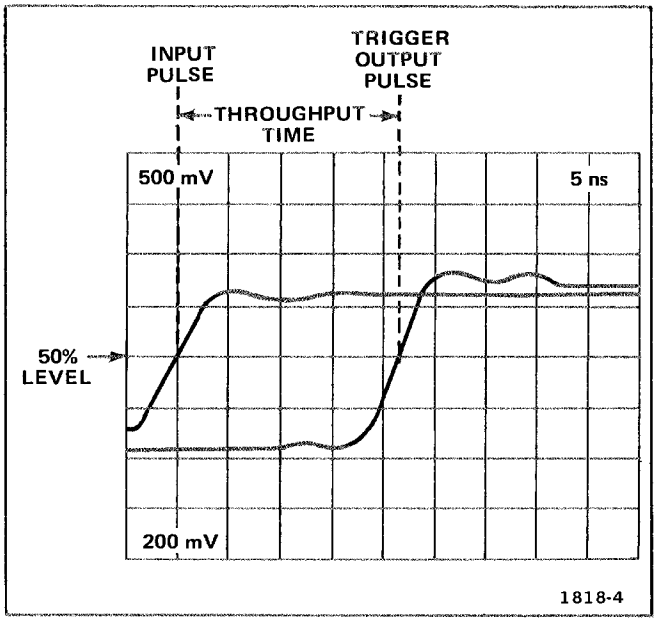

Fig. 5-2. Simulated display of the time relationship between the input and the delayed trigger output signals.

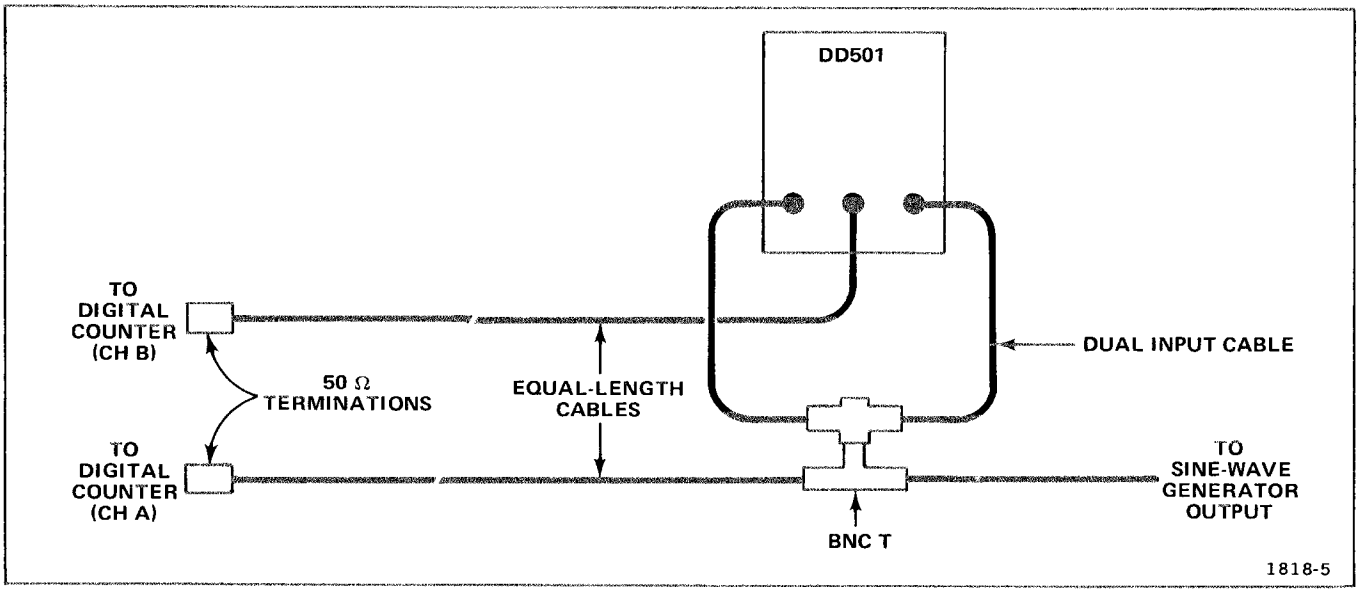

Fig. 5-3. Delay count accuracy test setup.

REPLACEABLE ELECTRICAL PARTS

PARTS ORDERING INFORMATION

Replacement parts are available from or through your local Tektronix, Inc. Field Office or representative.

Changes to Tektronix instruments are sometimes made to accommodate improved components as they become available, and to give you the benefit of the latest circuit improvements developed in our engineering department. It is therefore important, when ordering parts, to include the following information in your order: Part number, instrument type or number, serial number, and modification number if applicable.

If a part you have ordered has been replaced with a new or improved part, your local Tektronix, Inc. Field Office or representative will contact you concerning any change in part number.

Change information, if any, is located at the rear of this manual.

SPECIAL NOTES AND SYMBOLS

X000	Part first added at this serial number
00X	Part removed after this serial number

ITEM NAME

In the Parts List, an Item Name is separated from the description by a colon (:). Because of space limitations, an Item Name may sometimes appear as incomplete. For further Item Name identification, the U.S. Federal Cataloging Handbook H6-1 can be utilized where possible.

ABBREVIATIONS

ACTR	ACTUATOR	PLSTC	PLASTIC
ASSY	ASSEMBLY	QTZ	QUARTZ
CAP	CAPACITOR	RECP	RECEPTACLE
CER	CERAMIC	RES	RESISTOR
CKT	CIRCUIT	RF	RADIO FREQUENCY
COMP	COMPOSITION	SEL	SELECTED
CONN	CONNECTOR	SEMICOND	SEMICONDUCTOR
ELCTLT	ELECTROLYTIC	SENS	SENSITIVE
ELEC	ELECTRICAL	VAR	VARIABLE
INCAND	INCANDESCENT	WW	WIREWOUND
LED	LIGHT EMITTING DIODE	XFMR	TRANSFORMER
NONWIR	NON WIREWOUND	XTAL	CRYSTAL

CROSS INDEX MFR. CODE NUMBER TO MANUFACTURER

MFR.CODE	MANUFACTURER	ADDRESS	CITY,STATE,ZIP
01121	ALLEN-BRADLEY CO.	1201 2ND ST. SOUTH	MILWAUKEE, WI 53204
01295	TEXAS INSTRUMENTS, INC., SEMICONDUCTOR GROUP	P. O. BOX 5012	DALLAS, TX 75222
04222	AVX CERAMIC CORP.	P.O. BOX 867	MURTLE BEACH, SC 29577
04713	MOTOROLA, INC., SEMICONDUCTOR PRODUCTS DIV.	5005 E. MCDOWELL RD.	PHOENIX, AZ 85036
07126	DIGITRAN CO., THE	855 SOUTH ARROYO PARKWAY	PASADENA, CA 91105
07263	FAIRCHILD SEMICONDUCTOR, A DIV. OF FAIRCHILD CAMERA AND INSTRUMENT CORP.	464 ELLIS ST.	MOUNTAIN VIEW, CA 94042
07910	TELEDYNE SEMICONDUCTOR	12515 CHADRON AVE.	HAWTHORNE, CA 90250
08806	GENERAL ELECTRIC CO., MINIATURE LAMP PRODUCTS DEPT.	NELA PK.	CLEVELAND, OH 44112
18324	SIGNETICS CORP.	811 E. ARQUES	SUNNYVALE, CA 94086
24931	SPECIALTY CONNECTOR CO., INC.	3560 MADISON AVE.	INDIANAPOLIS, IN 46227
56289	SPRAGUE ELECTRIC CO.		NORTH ADAMS, MA 01247
71279	CAMBRIDGE THERMIONIC CORP.	445 CONCORD AVE.	CAMBRIDGE, MA 02138
71400	BUSSMAN MFG., DIVISION OF MCGRAW-EDISON CO.	2536 W. UNIVERSITY ST.	ST. LOUIS, MO 63107
72982	ERIE TECHNOLOGICAL PRODUCTS, INC.	644 W. 12TH ST.	ERIE, PA 16512
73138	BECKMAN INSTRUMENTS, INC., HELIPOT DIV.	2500 HARBOR BLVD.	FULLERTON, CA 92634
75042	TRW ELECTRONIC COMPONENTS, IRC FIXED RESISTORS, PHILADELPHIA DIVISION	401 N. BROAD ST.	PHILADELPHIA, PA 19108
80009	TEKTRONIX, INC.	P. O. BOX 500	BEAVERTON, OR 97077
80031	ELECTRA-MIDLAND CORP., MEPCO DIV., A NORTH AMERICAN PHILLIPS CO.	22 COLUMBIA RD.	MORRISTOWN, NJ 07960
80294	BOURNS, INC., INSTRUMENT DIV.	6135 MAGNOLIA AVE.	RIVERSIDE, CA 92506
81073	GRAYHILL, INC.	561 HILLGROVE AVE.	LA GRANGE, IL 60525

Ckt No.	Tektronix Part No.	Serial/Model No. Eff	Dscont	Name & Description	Mfr Code	Mfr Part Number
A1	670-3056-00	B010100	B019999	CKT BOARD ASSY:MAIN	80009	670-3056-00
A1	670-3056-01	B020000	B021179	CKT BOARD ASSY:MAIN	80009	670-3056-01
A1	670-3056-02	B021180		CKT BOARD ASSY:MAIN	80009	670-3056-02
A2	670-4316-00	XB020000	B021179	CKT BOARD ASSY:COUNTER SIDE	80009	670-4316-00
A2	670-4316-01	B021180		CKT BOARD ASSY:COUNTER SIDE	80009	670-4316-01
C22	281-0212-00			CAP.,VAR,PLSTC:1.5-5.5PF,100V	80031	C010KA/5E
C23	283-0001-00			CAP.,FXD,CER DI:0.005UF,+100-0%.500V	72982	831-559E502P
C25	283-0220-00			CAP.,FXD,CER DI:0.01UF,20%,50V	72982	8121N075W5R103M
C26	283-0220-00			CAP.,FXD,CER DI:0.01UF,20%,50V	72982	8121N075W5R103M
C29	283-0220-00			CAP.,FXD,CER DI:0.01UF,20%,50V	72982	8121N075W5R103M
C33	283-0220-00			CAP.,FXD,CER DI:0.01UF,20%,50V	72982	8121N075W5R103M
C34	281-0511-00			CAP.,FXD,CER DI:22PF,+/-2.2PF,500V	72982	301-000C0G0220K
C35	283-0251-00	B010100	B019999	CAP.,FXD,CER DI:87 PF,5%,100V	72982	8121N116 A 870J
C35	283-0299-00	B020000		CAP.,FXD,CER DI:51PF,5%,500V	72982	8121N501A510J
C36	283-0220-00			CAP.,FXD,CER DI:0.01UF,20%,50V	72982	8121N075W5R103M
C40	283-0220-00			CAP.,FXD,CER DI:0.01UF,20%,50V	72982	8121N075W5R103M
C53	290-0534-00			CAP.,FXD,ELCTLT:1UF,20%,35V	56289	196D105X0035HA1
C57	283-0220-00			CAP.,FXD,CER DI:0.01UF,20%,50V	72982	8121N075W5R103M
C64	283-0220-00			CAP.,FXD,CER DI:0.01UF,20%,50V	72982	8121N075W5R103M
C69	283-0220-00			CAP.,FXD,CER DI:0.01UF,20%,50V	72982	8121N075W5R103M
C122	281-0212-00			CAP.,VAR,PLSTC:1.5-5.5PF,100V	80031	C010KA/5E
C123	283-0001-00			CAP.,FXD,CER DI:0.005UF,+100-0%,500V	72982	831-559E502P
C125	283-0220-00			CAP.,FXD,CER DI:0.01UF,20%,50V	72982	8121N075W5R103M
C126	283-0220-00			CAP.,FXD,CER DI:0.01UF,20%,50V	72982	8121N075W5R103M
C128	283-0220-00			CAP.,FXD,CER DI:0.01UF,20%,50V	72982	8121N075W5R103M
C134	281-0511-00			CAP.,FXD,CER DI:22PF,+/-2.2PF,500V	72982	301-000C0G0220K
C135	283-0251-00	B010100	B019999	CAP.,FXD,CER DI:87 PF,5%,100V	72982	8121N116 A 870J
C135	283-0154-00	B020000		CAP.,FXD,CER DI:22PF,5%,50V	72982	8111B061C0G220J
C136	283-0220-00			CAP.,FXD,CER DI:0.01UF,20%,50V	72982	8121N075W5R103M
C140	283-0220-00			CAP.,FXD,CER DI:0.01UF,20%,50V	72982	8121N075W5R103M
C153	290-0534-00			CAP.,FXD,ELCTLT:1UF,20%,35V	56289	196D105X0035HA1
C156	283-0220-00			CAP.,FXD,CER DI:0.01UF,20%,50V	72982	8121N075W5R103M
C164	283-0220-00			CAP.,FXD,CER DI:0.01UF,20%,50V	72982	8121N075W5R103M
C204	281-0629-00			CAP.,FXD,CER DI:33PF,5%,600V	72982	308-000C0G0330J
C215	283-0116-00	B010100	B019999X	CAP.,FXD,CER DI:820PF,5%,500V	72982	801-547B821J
C232	283-0204-00	XB020000		CAP.,FXD,CER DI:0.01UF,20%,50V	72982	8121N075Z5U0103M
C233	281-0605-00	XB021180		CAP.,FXD,CER DI:200PF,10%,500V	04222	7001-1375
C271	283-0204-00	XB020000		CAP.,FXD,CER DI:0.01UF,20%,50V	72982	8121N075Z5U0103M
C272	283-0204-00	XB020000		CAP.,FXD,CER DI:0.01UF,20%,50V	72982	8121N075Z5U0103M
C273	283-0204-00	XB020000		CAP.,FXD,CER DI:0.01UF,20%,50V	72982	8121N075Z5U0103M
C274	283-0204-00	XB020000		CAP.,FXD,CER DI:0.01UF,20%,50V	72982	8121N075Z5U0103M
C279	290-0534-00			CAP.,FXD,ELCTLT:1UF,20%,35V	56289	196D105X0035HA1
C285	283-0220-00			CAP.,FXD,CER DI:0.01UF,20%,50V	72982	8121N075W5R103M
C286	281-0516-00			CAP.,FXD,CER DI:39PF,+/-3.9PF,500V	72982	301-000U2J0390K
C287	290-0722-00			CAP.,FXD,ELCTLT:100UF,20%,10V	56289	196D107X0010PE3
C288	283-0220-00			CAP.,FXD,CER DI:0.01UF,20%,50V	72982	8121N075W5R103M
C290	283-0220-00			CAP.,FXD,CER DI:0.01UF,20%,50V	72982	8121N075W5R103M
C320	281-0516-00			CAP.,FXD,CER DI:39PF,+/-3.9PF,500V	72982	301-000U2J0390K
C325	283-0059-00			CAP.,FXD,CER DI:1UF,+80-20%,25V	72982	8141N038E105Z
C337	283-0059-00			CAP.,FXD,CER DI:1UF,+80-20%,25V	72982	8141N038E105Z
C340	281-0592-00			CAP.,FXD,CER DI:4.7PF,+/-0.5PF,500V	72982	301-023C0H0479D
C347	283-0059-00			CAP.,FXD,CER DI:1UF,+80-20%,25V	72982	8141N038E105Z
C359	283-0059-00			CAP.,FXD,CER DI:1UF,+80-20%,25V	72982	8141N038E105Z

Ckt No.	Tektronix Part No.	Serial/Model No. Eff	Dscont	Name & Description	Mfr Code	Mfr Part Number
C360	290-0722-00			CAP.,FXD,ELCTLT:100UF,20%,10V	56289	196D107X0010PE3
C361	290-0722-00			CAP.,FXD,ELCTLT:100UF,20%,10V	56289	196D107X0010PE3
C362	290-0722-00			CAP.,FXD,ELCTLT:100UF,20%,10V	56289	196D107X0010PE3
C363	290-0722-00			CAP.,FXD,ELCTLT:100UF,20%,10V	56289	196D107X0010PE3
C364	281-0525-00			CAP.,FXD,CER DI:470PF,+/-94PF,500V	04222	7001-1364
C365	290-0722-00			CAP.,FXD,ELCTLT:100UF,20%,10V	56289	196D107X0010PE3
C366	290-0722-00			CAP.,FXD,ELCTLT:100UF,20%,10V	56289	196D107X0010PE3
C367	290-0722-00			CAP.,FXD,ELCTLT:100UF,20%,10V	56289	196D107X0010PE3
C368	290-0722-00			CAP.,FXD,ELCTLT:100UF,20%,10V	56289	196D107X0010PE3
C369	290-0722-00			CAP.,FXD,ELCTLT:100UF,20%,10V	56289	196D107X0010PE3
C376	290-0534-00			CAP.,FXD,ELCTLT:1UF,20%,35V	56289	196D105X0035HA1
C377	290-0722-00			CAP.,FXD,ELCTLT:100UF,20%,10V	56289	196D107X0010PE3
C380	290-0719-00			CAP.,FXD,ELCTLT:47UF,20%,25V	56289	196D476X0025TE3
C382	290-0719-00			CAP.,FXD,ELCTLT:47UF,20%,25V	56289	196D476X0025TE3
C384	281-0525-00			CAP.,FXD,CER DI:470PF,+/-94PF,500V	04222	7001-1364
C386	290-0719-00			CAP.,FXD,ELCTLT:47UF,20%,25V	56289	196D476X0025TE3
CR23	152-0141-02			SEMICOND DEVICE:SILICON,30V,150MA	07910	1N4152
CR26	152-0141-02			SEMICOND DEVICE:SILICON,30V,150MA	07910	1N4152
CR36	152-0141-02			SEMICOND DEVICE:SILICON,30V,150MA	07910	1N4152
CR123	152-0141-02			SEMICOND DEVICE:SILICON,30V,150MA	07910	1N4152
CR126	152-0141-02			SEMICOND DEVICE:SILICON,30V,150MA	07910	1N4152
CR136	152-0141-02			SEMICOND DEVICE:SILICON,30V,150MA	07910	1N4152
CR230	152-0141-02			SEMICOND DEVICE:SILICON,30V,150MA	07910	1N4152
CR232	152-0141-02	XB020000		SEMICOND DEVICE:SILICON,30V,150MA	07910	1N4152
CR336	152-0141-02			SEMICOND DEVICE:SILICON,30V,150MA	07910	1N4152
CR337	152-0141-02			SEMICOND DEVICE:SILICON,30V,150MA	07910	1N4152
CR345	152-0141-02			SEMICOND DEVICE:SILICON,30V,150MA	07910	1N4152
CR350	152-0141-02			SEMICOND DEVICE:SILICON,30V,150MA	07910	1N4152
CR351	152-0141-02			SEMICOND DEVICE:SILICON,30V,150MA	07910	1N4152
DS320	150-0048-00			LAMP,INCAND:5V,60MA	08806	683
DS330	150-0048-00			LAMP,INCAND:5V,60MA	08806	683
DS340	150-0048-00			LAMP,INCAND:5V,60MA	08806	683
DS365	150-0048-00			LAMP,INCAND:5V,60MA	08806	683
F366	159-0021-00			FUSE,CARTRIDGE:3AG,2A,250V,FAST-BLOW	71400	AGC 2
F386	159-0025-00			FUSE,CARTRIDGE:3AG,0.5A,250V,FAST-BLOW	71400	AGC 1/2
J20	131-0955-00			CONNECTOR,RCPT,:BNC,FEMALE,W/HARDWARE	05091	31-279
J58	131-0258-00			CONNECTOR,RCPT,:JACK ASSEMBLY	80009	131-0258-00
J65	136-0387-00			JACK,TIP:GRAY	71279	450-4352-01-0318
J120	131-0955-00			CONNECTOR,RCPT,:BNC,FEMALE,W/HARDWARE	05091	31-279
J158	131-0258-00			CONNECTOR,RCPT,:JACK ASSEMBLY	80009	131-0258-00
J165	136-0387-00			JACK,TIP:GRAY	71279	450-4352-01-0318
J345	131-0955-00			CONNECTOR,RCPT,:BNC,FEMALE,W/HARDWARE	05091	31-279
L215	108-0543-00	B010100	B019999X	COIL,RF:1.1UF	80009	108-0543-00
L360	108-0245-00			COIL,RF:3.9UH	80009	108-0245-00
L361	108-0245-00			COIL,RF:3.9UH	80009	108-0245-00
L362	108-0245-00			COIL,RF:3.9UH	80009	108-0245-00
L363	108-0245-00			COIL,RF:3.9UH	80009	108-0245-00
L367	108-0245-00			COIL,RF:3.9UH	80009	108-0245-00
L380	108-0245-00			COIL,RF:3.9UH	80009	108-0245-00
L382	108-0245-00			COIL,RF:3.9UH	80009	108-0245-00

Ckt No.	Tektronix Part No.	Serial/Model No. Eff	Dscont	Name & Description	Mfr Code	Mfr Part Number
Q28A,B	151-1042-00			SEMICOND DVC SE:MATCHED PAIR FET	80009	151-1042-00
Q30	151-0198-00			TRANSISTOR:SILICON,NPN,SEL FROM MPS918	80009	151-0198-00
Q35	151-0367-00			TRANSISTOR:SILICON,NPN,SEL FROM 3571TP	80009	151-0367-00
Q40	151-0367-00			TRANSISTOR:SILICON,NPN,SEL FROM 3571TP	80009	151-0367-00
Q60	151-0198-00			TRANSISTOR:SILICON,NPN,SEL FROM MPS918	80009	151-0198-00
Q128A,B	151-1042-00			SEMICOND DVC SE:MATCHED PAIR,FET	80009	151-1042-00
Q130	151-0198-00			TRANSISTOR:SILICON,NPN,SEL FROM MPS918	80009	151-0198-00
Q135	151-0367-00			TRANSISTOR:SILICON,NPN,SEL FROM 3571TP	80009	151-0367-00
Q140	151-0367-00			TRANSISTOR:SILICON,NPN,SEL FROM 3571TP	80009	151-0367-00
Q160	151-0198-00			TRANSISTOR:SILICON,NPN,SEL FROM MPS918	80009	151-0198-00
Q200	151-0221-00	B010100	B019999X	TRANSISTOR:SILICON,PNP	80009	151-0221-00
Q205	151-0198-00			TRANSISTOR:SILICON,NPN,SEL FROM MPS918	80009	151-0198-00
Q240	151-0190-00	XB020000		TRANSISTOR:SILICON,NPN	80009	151-0190-00
Q241	151-0190-00	XB020000		TRANSISTOR:SILICON,NPN	80009	151-0190-00
Q242	151-0190-00	XB020000		TRANSISTOR:SILICON,NPN	80009	151-0190-00
Q280	151-0221-00			TRANSISTOR:SILICON,PNP	80009	151-0221-00
Q290	151-0198-00			TRANSISTOR:SILICON,NPN,SEL FROM MPS918	80009	151-0198-00
Q320	151-0221-00			TRANSISTOR:SILICON,PNP	80009	151-0221-00
Q325	151-0341-00			TRANSISTOR:SILICON,NPN	07263	S040065
Q330	151-0221-00			TRANSISTOR:SILICON,PNP	80009	151-0221-00
Q335	151-0341-00			TRANSISTOR:SILICON,NPN	07263	S040065
Q340	151-0221-00			TRANSISTOR:SILICON,PNP	80009	151-0221-00
Q345	151-0198-00			TRANSISTOR:SILICON,NPN,SEL FROM MPS918	80009	151-0198-00
Q348	151-0341-00			TRANSISTOR:SILICON,NPN	07263	S040065
Q366	151-0515-01			TRANSISTOR:50V,8A	04713	2N4441
Q386	151-0515-01			TRANSISTOR:50V,8A	04713	2N4441
R20	315-0100-00			RES.,FXD,CMPSN:10 OHM,5%,0.25W	01121	CB1005
R22	321-0481-00			RES.,FXD,FILM:1M OHM,1%,0.125W	91637	MFF1816G10003F
R23	315-0474-00			RES.,FXD,CMPSN:470K OHM,5%,0.25W	01121	CB4745
R24	315-0512-00			RES.,FXD,CMPSN:5.1K OHM,5%,0.25W	01121	CB5125
R25	315-0103-00			RES.,FXD,CMPSN:10K OHM,5%,0.25W	01121	CB1035
R26	315-0470-00			RES.,FXD,CMPSN:47 OHM,5%,0.25W	01121	CB4705
R27	315-0101-00			RES.,FXD,CMPSN:100 OHM,5%,0.25W	01121	CB1015
R28	315-0511-00			RES.,FXD,CMPSN:510 OHM,5%,0.25W	01121	CB5115
R29	311-1259-00			RES.,VAR,NONWIR:100 OHM,10%,0.50W	32997	3329P-L58-101
R30	315-0201-00			RES.,FXD,CMPSN:200 OHM,5%,0.25W	01121	CB2015
R32	315-0470-00			RES.,FXD,CMPSN:47 OHM,5%,0.25W	01121	CB4705
R33	315-0152-00			RES.,FXD,CMPSN:1.5K OHM,5%,0.25W	01121	CB1525
R34	315-0330-00			RES.,FXD,CMPSN:33 OHM,5%,0.25W	01121	CB3305
R35	315-0432-00			RES.,FXD,CMPSN:4.3K OHM,5%,0.25W	01121	CB4325
R36	315-0201-00			RES.,FXD,CMPSN:200 OHM,5%,0.25W	01121	CB2015
R37	315-0390-00			RES.,FXD,CMPSN:39 OHM,5%,0.25W	01121	CB3905
R40	315-0432-00			RES.,FXD,CMPSN:4.3K OHM,5%,0.25W	01121	CB4325
R42	315-0201-00			RES.,FXD,CMPSN:200 OHM,5%,0.25W	01121	CB2015
R44	315-0911-00			RES.,FXD,CMPSN:910 OHM,5%,0.25W	01121	CB9115
R46	315-0911-00			RES.,FXD,CMPSN:910 OHM,5%,0.25W	01121	CB9115
R47	315-0511-00			RES.,FXD,CMPSN:510 OHM,5%,0.25W	01121	CB5115
R49	315-0511-00			RES.,FXD,CMPSN:510 OHM,5%,0.25W	01121	CB5115
R50	315-0103-00			RES.,FXD,CMPSN:10K OHM,5%,0.25W	01121	CB1035
R52	315-0103-00			RES.,FXD,CMPSN:10K OHM,5%,0.25W	01121	CB1035
R56	315-0471-00			RES.,FXD,CMPSN:470 OHM,5%,0.25W	01121	CB4715
R57	315-0471-00			RES.,FXD,CMPSN:470 OHM,5%,0.25W	01121	CB4715

Ckt No.	Tektronix Part No.	Serial/Model No. Eff	Dscont	Name & Description	Mfr Code	Mfr Part Number
R58	315-0101-00			RES.,FXD,CMPSN:100 OHM,5%,0.25W	01121	CB1015
R59	315-0101-00			RES.,FXD,CMPSN:100 OHM,5%,0.25W	01121	CB1015
R60	315-0470-00			RES.,FXD,CMPSN:47 OHM,5%,0.25W	01121	CB4705
R61	315-0512-00			RES.,FXD,CMPSN:5.1K OHM,5%,0.25W	01121	CB5125
R62	315-0201-00			RES.,FXD,CMPSN:200 OHM,5%,0.25W	01121	CB2015
R63	315-0470-00			RES.,FXD,CMPSN:47 OHM,5%,0.25W	01121	CB4705
R64	315-0102-00			RES.,FXD,CMPSN:1K OHM,5%,0.25W	01121	CB1025
R66	315-0911-00			RES.,FXD,CMPSN:910 OHM,5%,0.25W	01121	CB9115
R67	315-0361-00			RES.,FXD,CMPSN:360 OHM,5%,0.25W	01121	CB3615
R68	315-0301-00			RES.,FXD,CMPSN:300 OHM,5%,0.25W	01121	CB3015
R69	315-0272-00			RES.,FXD,CMPSN:2.7K OHM,5%,0.25W	01121	CB2725
R70	311-1715-00			RES.,VAR,NONWIR:10K OHM,20%,1W	01121	13M865A
R75	311-0326-00			RES.,VAR,NONWIR:10K OHM,20%,0.50W	01121	W7683
R120	315-0100-00			RES.,FXD,CMPSN:10 OHM,5%,0.25W	01121	CB1005
R122	321-0481-00			RES.,FXD,FILM:1M OHM,1%,0.125W	91637	MFF1816G10003F
R123	315-0474-00			RES.,FXD,CMPSN:470K OHM,5%,0.25W	01121	CB4745
R124	315-0512-00			RES.,FXD,CMPSN:5.1K OHM,5%,0.25W	01121	CB5125
R125	315-0103-00			RES.,FXD,CMPSN:10K OHM,5%,0.25W	01121	CB1035
R126	315-0470-00			RES.,FXD,CMPSN:47 OHM,5%,0.25W	01121	CB4705
R127	315-0101-00			RES.,FXD,CMPSN:100 OHM,5%,0.25W	01121	CB1015
R128	315-0511-00			RES.,FXD,CMPSN:510 OHM,5%,0.25W	01121	CB5115
R129	311-1259-00			RES.,VAR,NONWIR:100 OHM,10%,0.50W	32997	3329P-L58-101
R130	315-0201-00			RES.,FXD,CMPSN:200 OHM,5%,0.25W	01121	CB2015
R132	315-0470-00			RES.,FXD,CMPSN:47 OHM,5%,0.25W	01121	CB4705
R133	315-0152-00			RES.,FXD,CMPSN:1.5K OHM,5%,0.25W	01121	CB1525
R134	315-0330-00			RES.,FXD,CMPSN:33 OHM,5%,0.25W	01121	CB3305
R135	315-0432-00			RES.,FXD,CMPSN:4.3K OHM,5%,0.25W	01121	CB4325
R136	315-0201-00			RES.,FXD,CMPSN:200 OHM,5%,0.25W	01121	CB2015
R137	315-0390-00			RES.,FXD,CMPSN:39 OHM,5%,0.25W	01121	CB3905
R140	315-0432-00			RES.,FXD,CMPSN:4.3K OHM,5%,0.25W	01121	CB4325
R142	315-0201-00			RES.,FXD,CMPSN:200 OHM,5%,0.25W	01121	CB2015
R144	315-0911-00			RES.,FXD,CMPSN:910 OHM,5%,0.25W	01121	CB9115
R146	315-0911-00			RES.,FXD,CMPSN:910 OHM,5%,0.25W	01121	CB9115
R147	315-0511-00			RES.,FXD,CMPSN:510 OHM,5%,0.25W	01121	CB5115
R149	315-0511-00			RES.,FXD,CMPSN:510 OHM,5%,0.25W	01121	CB5115
R150	315-0103-00			RES.,FXD,CMPSN:10K OHM,5%,0.25W	01121	CB1035
R152	315-0103-00			RES.,FXD,CMPSN:10K OHM,5%,0.25W	01121	CB1035
R156	315-0471-00			RES.,FXD,CMPSN:470 OHM,5%,0.25W	01121	CB4715
R157	315-0471-00			RES.,FXD,CMPSN:470 OHM,5%,0.25W	01121	CB4715
R158	315-0101-00			RES.,FXD,CMPSN:100 OHM,5%,0.25W	01121	CB1015
R159	315-0101-00			RES.,FXD,CMPSN:100 OHM,5%,0.25W	01121	CB1015
R160	315-0470-00			RES.,FXD,CMPSN:47 OHM,5%,0.25W	01121	CB4705
R161	315-0512-00			RES.,FXD,CMPSN:5.1K OHM,5%,0.25W	01121	CB5125
R162	315-0201-00			RES.,FXD,CMPSN:200 OHM,5%,0.25W	01121	CB2015
R163	315-0470-00			RES.,FXD,CMPSN:47 OHM,5%,0.25W	01121	CB4705
R164	315-0102-00			RES.,FXD,CMPSN:1K OHM,5%,0.25W	01121	CB1025
R166	315-0911-00			RES.,FXD,CMPSN:910 OHM,5%,0.25W	01121	CB9115
R167	315-0361-00			RES.,FXD,CMPSN:360 OHM,5%,0.25W	01121	CB3615
R168	315-0301-00			RES.,FXD,CMPSN:300 OHM,5%,0.25W	01121	CB3015
R169	315-0272-00			RES.,FXD,CMPSN:2.7K OHM,5%,0.25W	01121	CB2725
R170	311-1715-00			RES.,VAR,NONWIR:10K OHM,20%,1W	01121	13M865A
R175	311-0326-00			RES.,VAR,NONWIR:10K OHM,20%,0.50W	01121	W7683
R200	315-0121-00	B010100	B019999X	RES.,FXD,CMPSN:120 OHM,5%,0.25W	01121	CB1215

Ckt No.	Tektronix Part No.	Serial/Model No. Eff	Dscont	Name & Description	Mfr Code	Mfr Part Number
R202	315-0390-00	B010100	B019999X	RES.,FXD,CMPSN:39 OHM,5%,0.25W	01121	CB3905
R203	315-0242-00			RES.,FXD,CMPSN:2.4K OHM,5%,0.25W	01121	CB2425
R204	315-0152-00			RES.,FXD,CMPSN:1.5K OHM,5%,0.25W	01121	CB1525
R205	315-0242-00			RES.,FXD,CMPSN:2.4K OHM,5%,0.25W	01121	CB2425
R206	315-0221-00			RES.,FXD,CMPSN:220 OHM,5%,0.25W	01121	CB2215
R207	315-0512-00			RES.,FXD,CMPSN:5.1K OHM,5%,0.25W	01121	CB5125
R212	315-0511-00	B010100	B019999X	RES.,FXD,CMPSN:510 OHM,5%,0.25W	01121	CB5115
R214	315-0511-00	B010100	B019999X	RES.,FXD,CMPSN:510 OHM,5%,0.25W	01121	CB5115
R229	315-0511-00			RES.,FXD,CMPSN:510 OHM,5%,0.25W	01121	CB5115
R230	315-0511-00			RES.,FXD,CMPSN:510 OHM,5%,0.25W	01121	CB5115
R231	315-0511-00			RES.,FXD,CMPSN:510 OHM,5%,0.25W	01121	CB5115
R232	315-0511-00			RES.,FXD,CMPSN:510 OHM,5%,0.25W	01121	CB5115
R235	315-0820-00	B010100	B019999X	RES.,FXD,CMPSN:82 OHM,5%,0.25W	01121	CB8205
R233	315-0102-00	XB020000		RES.,FXD,CMPSN:1K OHM,5%,0.25W	01121	CB1025
R234	315-0102-00	XB020000		RES.,FXD,CMPSN:1K OHM,5%,0.25W	01121	CB1025
R235	315-0511-00	XB021180		RES.,FXD,CMPSN:510 OHM,5%,0.25W	01121	CB5115
R236	315-0102-00	XB020000		RES.,FXD,CMPSN:1K OHM,5%,0.25W	01121	CB1025
R237	315-0511-00	XB020000		RES.,FXD,CMPSN:510 OHM,5%,0.25W	01121	CB5115
R238	315-0102-00	XB020000		RES.,FXD,CMPSN:1K OHM,5%,0.25W	01121	CB1025
R239	315-0181-00	B010100	B019999X	RES.,FXD,CMPSN:180 OHM,5%,0.25W	01121	CB1815
R240	315-0102-00	B010100	B019999X	RES.,FXD,CMPSN:1K OHM,5%,0.25W	01121	CB1025
R241	315-0162-00	B010100	B019999X	RES.,FXD,CMPSN:1.6K OHM,5%,0.25W	01121	CB1625
R242	315-0331-00	B010100	B019999X	RES.,FXD,CMPSN:330 OHM,5%,0.25W	01121	CB3315
R243	315-0511-00	B010100	B019999X	RES.,FXD,CMPSN:510 OHM,5%,0.25W	01121	CB5115
R244	315-0131-00	B010100	B019999	RES.,FXD,CMPSN:130 OHM,5%,0.25W	01121	CB1315
R244	315-0511-00	B020000		RES.,FXD,CMPSN:510 OHM,5%,0.25W	01121	CB5115
R245	315-0511-00	B010100	B019999X	RES.,FXD,CMPSN:510 OHM,5%,0.25W	01121	CB5115
R246	315-0511-00			RES.,FXD,CMPSN:510 OHM,5%,0.25W	01121	CB5115
R247	315-0511-00			RES.,FXD,CMPSN:510 OHM,5%,0.25W	01121	CB5115
R248	315-0511-00			RES.,FXD,CMPSN:510 OHM,5%,0.25W	01121	CB5115
R249	315-0511-00			RES.,FXD,CMPSN:510 OHM,5%,0.25W	01121	CB5115
R250	315-0242-00			RES.,FXD,CMPSN:2.4K OHM,5%,0.25W	01121	CB2425
R251	315-0242-00			RES.,FXD,CMPSN:2.4K OHM,5%,0.25W	01121	CB2425
R252	315-0242-00			RES.,FXD,CMPSN:2.4K OHM,5%,0.25W	01121	CB2425
R253	315-0242-00			RES.,FXD,CMPSN:2.4K OHM,5%,0.25W	01121	CB2425
R254	315-0242-00			RES.,FXD,CMPSN:2.4K OHM,5%,0.25W	01121	CB2425
R255	315-0511-00	XB020000		RES.,FXD,CMPSN:510 OHM,5%,0.25W	01121	CB5115
R256	315-0511-00	XB020000		RES.,FXD,CMPSN:510 OHM,5%,0.25W	01121	CB5115
R257	315-0511-00	XB020000		RES.,FXD,CMPSN:510 OHM,5%,0.25W	01121	CB5115
R260	315-0331-00			RES.,FXD,CMPSN:330 OHM,5%,0.25W	01121	CB3315
R261	315-0511-00	XB020000		RES.,FXD,CMPSN:510 OHM,5%,0.25W	01121	CB5115
R262	315-0331-00			RES.,FXD,CMPSN:330 OHM,5%,0.25W	01121	CB3315
R263	315-0511-00	XB020000		RES.,FXD,CMPSN:510 OHM,5%,0.25W	01121	CB5115
R264	315-0331-00			RES.,FXD,CMPSN:330 OHM,5%,0.25W	01121	CB3315
R265	315-0511-00	XB020000		RES.,FXD,CMPSN:510 OHM,5%,0.25W	01121	CB5115
R266	315-0331-00			RES.,FXD,CMPSN:330 OHM,5%,0.25W	01121	CB3315
R267	315-0511-00	XB020000		RES.,FXD,CMPSN:510 OHM,5%,0.25W	01121	CB5115
R268	315-0511-00	XB020000		RES.,FXD,CMPSN:510 OHM,5%,0.25W	01121	CB5115
R269	315-0511-00	XB020000		RES.,FXD,CMPSN:510 OHM,5%,0.25W	01121	CB5115
R270	315-0102-00			RES.,FXD,CMPSN:1K OHM,5%,0.25W	01121	CB1025
R271	315-0102-00			RES.,FXD,CMPSN:1K OHM,5%,0.25W	01121	CB1025
R272	315-0102-00			RES.,FXD,CMPSN:1K OHM,5%,0.25W	01121	CB1025
R273	315-0102-00			RES.,FXD,CMPSN:1K OHM,5%,0.25W	01121	CB1025

Ckt No.	Tektronix Part No.	Serial/Model No. Eff	Dscont	Name & Description	Mfr Code	Mfr Part Number
R274	315-0511-00	XB020000		RES.,FXD,CMPSN:510 OHM,5%,0.25W	01121	CB5115
R275	315-0162-00			RES.,FXD,CMPSN:1.6K OHM,5%,0.25W	01121	CB1625
R276	315-0162-00			RES.,FXD,CMPSN:1.6K OHM,5%,0.25W	01121	CB1625
R277	315-0162-00			RES.,FXD,CMPSN:1.6K OHM,5%,0.25W	01121	CB1625
R278	315-0162-00			RES.,FXD,CMPSN:1.6K OHM,5%,0.25W	01121	CB1625
R279	315-0511-00	B010100	B019999X	RES.,FXD,CMPSN:510 OHM,5%,0.25W	01121	CB5115
R280	315-0510-00	B010100	B019999X	RES.,FXD,CMPSN:51 OHM,5%,0.25W	01121	CB5105
R281	315-0511-00	XB020000		RES.,FXD,CMPSN:510 OHM,5%,0.25W	01121	CB5115
R282	315-0511-00	B010100	B019999X	RES.,FXD,CMPSN:510 OHM,5%,0.25W	01121	CB5115
R283	315-0511-00	B010100	B019999X	RES.,FXD,CMPSN:510 OHM,5%,0.25W	01121	CB5115
R284	315-0511-00			RES.,FXD,CMPSN:510 OHM,5%,0.25W	01121	CB5115
R285	315-0511-00	XB020000		RES.,FXD,CMPSN:510 OHM,5%,0.25W	01121	CB5115
R286	315-0240-00			RES.,FXD,CMPSN:24 OHM,5%,0.25W	01121	CB2405
R287	315-0511-00			RES.,FXD,CMPSN:510 OHM,5%,0.25W	01121	CB5115
R288	315-0750-00			RES.,FXD,CMPSN:75 OHM,5%,0.25W	01121	CB7505
R289	315-0511-00			RES.,FXD,CMPSN:510 OHM,5%,0.25W	01121	CB5115
R290	315-0511-00			RES.,FXD,CMPSN:510 OHM,5%,0.25W	01121	CB5115
R291	315-0511-00			RES.,FXD,CMPSN:510 OHM,5%,0.25W	01121	CB5115
R292	315-0511-00			RES.,FXD,CMPSN:510 OHM,5%,0.25W	01121	CB5115
R293	315-0511-00			RES.,FXD,CMPSN:510 OHM,5%,0.25W	01121	CB5115
R294	315-0511-00			RES.,FXD,CMPSN:510 OHM,5%,0.25W	01121	CB5115
R295	315-0221-00			RES.,FXD,CMPSN:220 OHM,5%,0.25W	01121	CB2215
R296	315-0122-00			RES.,FXD,CMPSN:1.2K OHM,5%,0.25W	01121	CB1225
R297	315-0181-00			RES.,FXD,CMPSN:180 OHM,5%,0.25W	01121	CB1815
R298	315-0102-00			RES.,FXD,CMPSN:1K OHM,5%,0.25W	01121	CB1025
R320	315-0390-00			RES.,FXD,CMPSN:39 OHM,5%,0.25W	01121	CB3905
R322	315-0151-00			RES.,FXD,CMPSN:150 OHM,5%,0.25W	01121	CB1515
R323	315-0242-00			RES.,FXD,CMPSN:2.4K OHM,5%,0.25W	01121	CB2425
R324	315-0202-00			RES.,FXD,CMPSN:2K OHM,5%,0.25W	01121	CB2025
R325	315-0102-00			RES.,FXD,CMPSN:1K OHM,5%,0.25W	01121	CB1025
R326	315-0473-00			RES.,FXD,CMPSN:47K OHM,5%,0.25W	01121	CB4735
R327	307-0113-00			RES.,FXD,CMPSN:5.1 OHM,5%,0.25W	01121	CB51G5
R328	315-0151-00			RES.,FXD,CMPSN:150 OHM,5%,0.25W	01121	CB1515
R333	315-0390-00			RES.,FXD,CMPSN:39 OHM,5%,0.25W	01121	CB3905
R334	315-0221-00			RES.,FXD,CMPSN:220 OHM,5%,0.25W	01121	CB2215
R335	315-0202-00			RES.,FXD,CMPSN:2K OHM,5%,0.25W	01121	CB2025
R336	315-0102-00			RES.,FXD,CMPSN:1K OHM,5%,0.25W	01121	CB1025
R337	315-0473-00			RES.,FXD,CMPSN:47K OHM,5%,0.25W	01121	CB4735
R338	307-0113-00			RES.,FXD,CMPSN:5.1 OHM,5%,0.25W	01121	CB51G5
R339	315-0151-00			RES.,FXD,CMPSN:150 OHM,5%,0.25W	01121	CB1515
R340	315-0101-00			RES.,FXD,CMPSN:100 OHM,5%,0.25W	01121	CB1015
R341	315-0751-00			RES.,FXD.CMPSN:750 OHM,5%,0.25W	01121	CB7515
R342	315-0910-00			RES.,FXD,CMPSN:91 OHM,5%,0.25W	01121	CB9105
R343	315-0471-00			RES.,FXD,CMPSN:470 OHM,5%,0.25W	01121	CB4715
R344	315-0152-00			RES.,FXD,CMPSN:1.5K OHM,5%,0.25W	01121	CB1525
R345	315-0272-00			RES.,FXD,CMPSN:2.7K OHM,5%,0.25W	01121	CB2725
R346	315-0473-00			RES.,FXD,CMPSN:47K OHM,5%,0.25W	01121	CB4735
R347	315-0102-00			RES.,FXD,CMPSN:1K OHM,5%,0.25W	01121	CB1025
R348	315-0202-00			RES.,FXD,CMPSN:2K OHM,5%,0.25W	01121	CB2025
R350	317-0470-00			RES.,FXD,CMPSN:47 OHM,5%,0.125W	01121	BB4705
R352	307-0113-00			RES.,FXD,CMPSN:5.1 OHM,5%,0.25W	01121	CB51G5
R353	315-0151-00			RES.,FXD,CMPSN:150 OHM,5%,0.25W	01121	CB1515
R360	321-0225-00			RES.,FXD,FILM:2.15K OHM,1%,0.125W	91637	MFF1816G21500F

Ckt No.	Tektronix Part No.	Serial/Model No. Eff	Dscont	Name & Description	Mfr Code	Mfr Part Number
R361	315-0332-00			RES.,FXD,CMPSN:3.3K OHM,5%,0.25W	01121	CB3325
R362	321-0260-00			RES.,FXD,FILM:4.99K OHM,1%,0.125W	91637	MFF1816G49900F
R363	308-0465-00			RES.,FXD,WW:0.2 OHM,10%,2W	80009	308-0465-00
R364	315-0152-00			RES.,FXD,CMPSN:1.5K OHM,5%,0.25W	01121	CB1525
R366	315-0102-00			RES.,FXD,CMPSN:1K OHM,5%,0.25W	01121	CB1025
R375	307-0057-00			RES.,FXD,CMPSN:5.1 OHM,5%,0.50W	01121	EB51G5
R380	321-0247-00			RES.,FXD,FILM:3.65K OHM,1%,0.125W	91637	MFF1816G36500F
R382	321-0295-00			RES.,FXD,FILM:11.5K OHM,1%,0.125W	91637	MFF1816G11501F
R383	315-0302-00			RES.,FXD,CMPSN:3K OHM,5%,0.25W	01121	CB3025
R384	315-0302-00			RES.,FXD,CMPSN:3K OHM,5%,0.25W	01121	CB3025
R385	315-0202-00			RES.,FXD,CMPSN:2K OHM,5%,0.25W	01121	CB2025
R386	315-0102-00			RES.,FXD,CMPSN:1K OHM,5%,0.25W	01121	CB1025
S70	311-1715-00			RES.,VAR,NONWIR:10K OHM,20%,1W	01121	13M865A
S170	311-1715-00			RES.,VAR,NONWIR:10K OHM,20%,1W	01121	13M865A
S240	260-0735-00			SWITCH,PUSH:SPST	81073	39-1
S410	260-1650-00			SWITCH,ROTARY:	07126	23-T-1
U44	156-0369-00			MICROCIRCUIT,LI:TRIPLE LINE RE	80009	156-0369-00
U144	156-0369-00			MICROCIRCUIT,LI:TRIPLE LINE RE	80009	156-0369-00
U200	156-0171-00			MICROCIRCUIT,DI:QUAD 2-INPUT OR GATE	01295	SN7432N
U210	156-0458-00			MICROCIRCUIT,DI:ECL 10K QUAD AND GATE	04713	MC10104L
U215	156-0205-00			MICROCIRCUIT,DI:QUAD 2-INPUT NOR GATE	80009	156-0205-00
U230	156-0230-00			MICROCIRCUIT,DI:DUAL D MA-SLAVE FLIP-FLOP	80009	156-0230-00
U232	156-0230-00	XB020000		MICROCIRCUIT,DI:DUAL D MA-SLAVE FLIP-FLOP	80009	156-0230-00
U240	156-0205-00			MICROCIRCUIT,DI:QUAD 2-INPUT NOR GATE	80009	156-0205-00
U250	156-0097-00			MICROCIRCUIT,DI:DIV BY 2 AND 5 RIPPLE CNTR	80009	156-0097-00
U255	156-0097-00			MICROCIRCUIT,DI:DIV BY 2 AND 5 RIPPLE CNTR	80009	156-0097-00
U256	307-0422-00			RES.,FXD,FILM:15 RES. NETWORK	73138	898-1-R242J
U260	156-0097-00			MICROCIRCUIT,DI:DIV BY 2 AND 5 RIPPLE CNTR	80009	156-0097-00
U265	156-0097-00			MICROCIRCUIT,DI:DIV BY 2 AND 5 RIPPLE CNTR	80009	156-0097-00
U270	156-0510-00	B010100	B019999X	MICROCIRCUIT,DI:MECL 10K,UNIVDECADE CNTR	04713	MC10137L
U271	156-0642-00	XB020000		MICROCIRCUIT,DI:BI-QUINARY CNTR	04713	MC10138L
U272	156-0458-00	XB020000		MICROCIRCUIT,DI:ECL 10K QUAD AND GATE	04713	MC10104L
U273	156-0458-00	XB020000		MICROCIRCUIT,DI:ECL 10K QUAD AND GATE	04713	MC10104L
U274	156-0230-00	XB020000		MICROCIRCUIT,DI:DUAL D MA-SLAVE FLIP-FLOP	80009	156-0230-00
U280	156-0205-00	B010100	B019999X	MICROCIRCUIT,DI:QUAD 2-INPUT NOR GATE	80009	156-0205-00
U290	156-0035-00			MICROCIRCUIT,DI:SGL 8-INPUT POS NAND GATE	80009	156-0035-00
U325	156-0331-00			MICROCIRCUIT,DI:DUAL D-TYPE,FLIP-FLOP	01295	SN74S74N
U327	156-0150-00			MICROCIRCUIT,DI:QUAD 2-INPUT POS NAND BFR	01295	SN7437N
U340	156-0331-00			MICROCIRCUIT,DI:DUAL D-TYPE,FLIP-FLOP	01295	SN74S74N
U360	156-0071-00			MICROCIRCUIT,LI:VOLTAGE REGULATOR	07263	723DC
U380	156-0071-00			MICROCIRCUIT,LI:VOLTAGE REGULATOR	07263	723DC
VR58	152-0278-00			SEMICOND DEVICE:ZENER,0.4W,3V,5%	07910	1N4372A
VR158	152-0278-00			SEMICOND DEVICE:ZENER,0.4W,3V,5%	07910	1N4372A
VR366	152-0280-00			SEMICOND DEVICE:ZENER,0.4W,6.2V,5%	80009	152-0280-00
VR386	152-0304-00			SEMICOND DEVICE:ZENER,0.4W,20V,5%	04713	1N968B

OPTION INFORMATION

Your instrument may be equipped with one or more options. This section describes those options, or directs the reader to where the option is documented.

@

Digitally signed by
http://www.aa4df.com

DIAGRAMS AND CIRCUIT BOARD ILLUSTRATIONS

Symbols and Reference Designators

Electrical components shown on the diagrams are in the following units unless noted otherwise:

Capacitors = Values one or greater are in picofarads (pF). Values less than one are in microfarads (μF).

Resistors = Ohms (Ω).

Symbols used on the diagrams are based on ANSI Standard Y32.2-1970.

Logic symbology is based on ANSI Y32.14-1973 in terms of positive logic. Logic symbols depict the logic function performed and may differ from the manufacturer's data.

The following prefix letters are used as reference designators to identify components or assemblies on the diagrams.

A	Assembly, separable or repairable (circuit board, etc.)	H	Heat dissipating device (heat sink, heat radiator, etc.)	RT	Thermistor
AT	Attenuator, fixed or variable	HR	Heater	S	Switch
B	Motor	HY	Hybrid circuit	T	Transformer
BT	Battery	J	Connector, stationary portion	TC	Thermocouple
C	Capacitor, fixed or variable	K	Relay	TP	Test point
CB	Circuit breaker	L	Inductor, fixed or variable	U	Assembly, inseparable or non-repairable (integrated circuit, etc.)
CR	Diode, signal or rectifier	LR	Inductor/resistor combination	V	Electron tube
DL	Delay line	M	Meter	VR	Voltage regulator (zener diode, etc.)
DS	Indicating device (lamp)	P	Connector, movable portion	Y	Crystal
E	Spark Gap	Q	Transistor or silicon-controlled rectifier	Z	Phase shifter
F	Fuse	R	Resistor, fixed or variable		
FL	Filter				

The following special symbols are used on the diagrams:

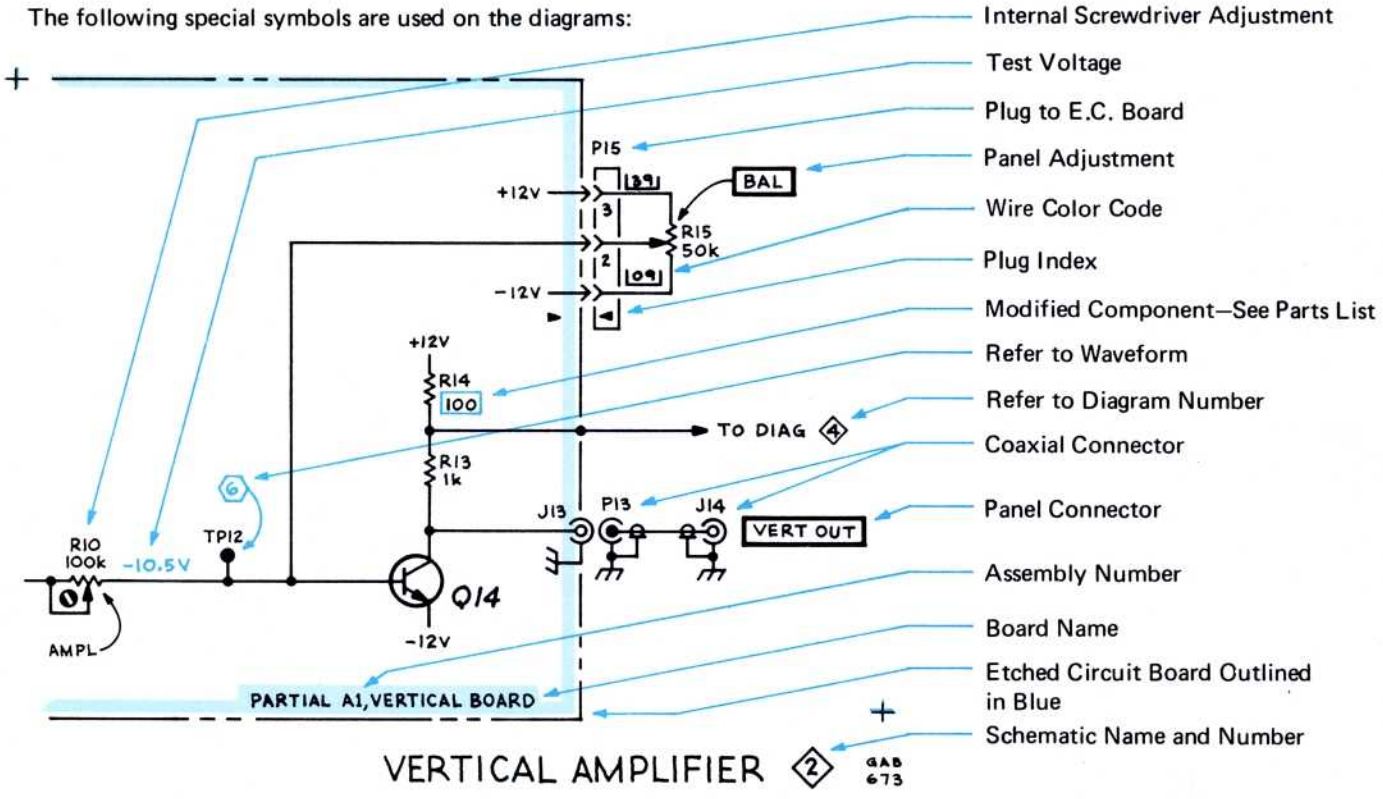

SYMBOLS AND REFERENCE DESIGNATORS

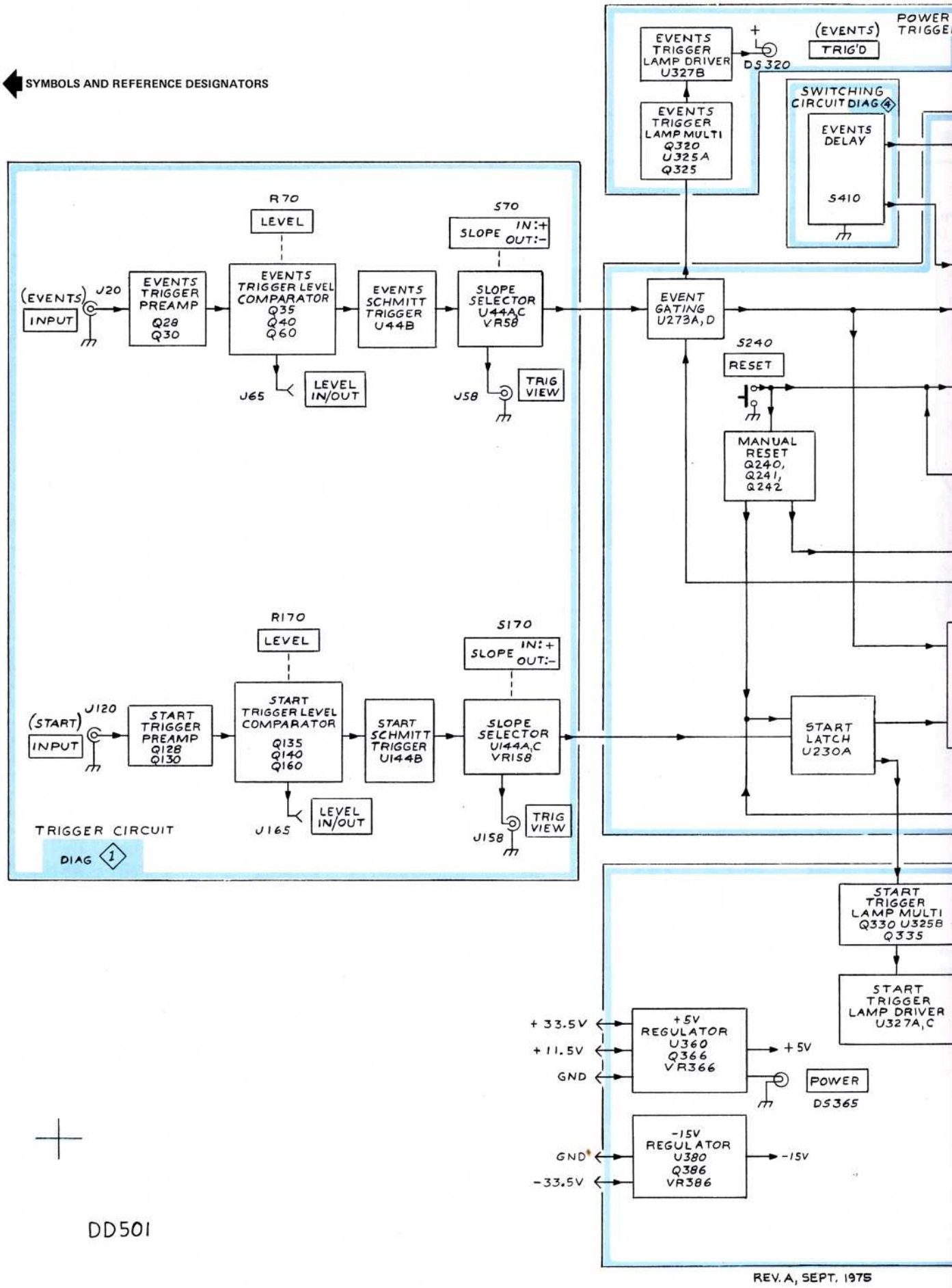

DD501

REV. A, SEPT. 1975

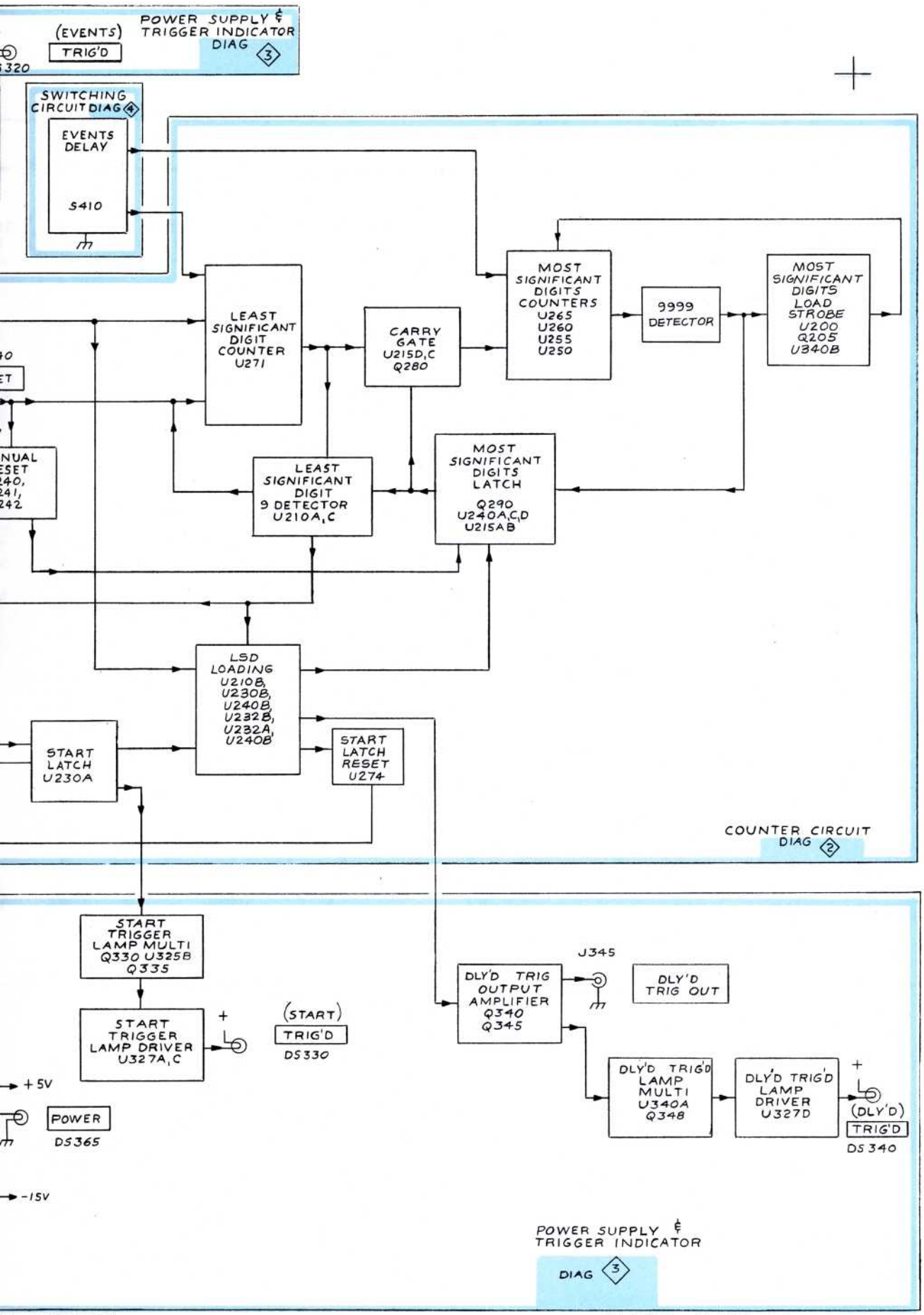

BLOCK DIAGRAM

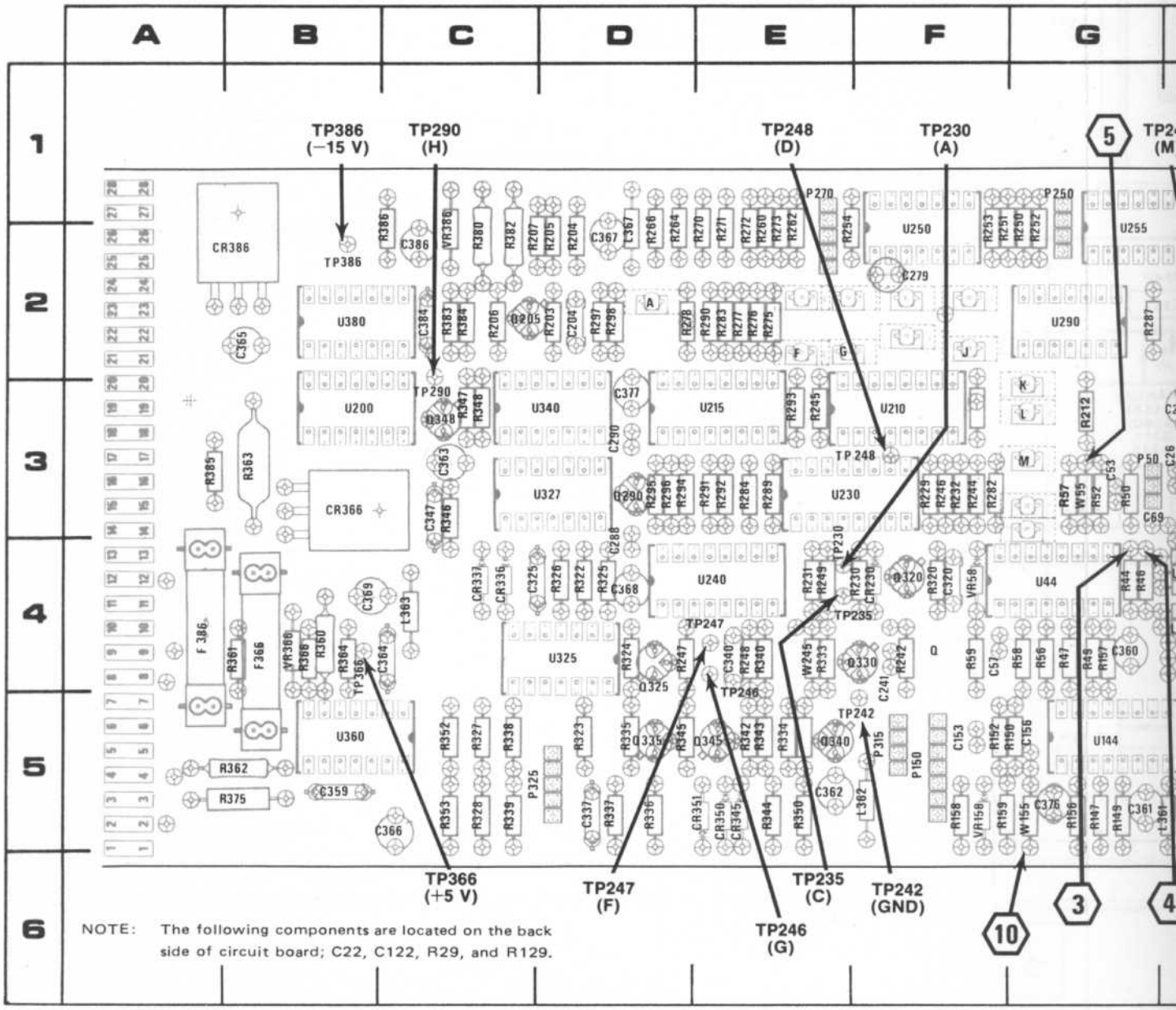

Fig. 7-1. Digital Delay circuit board locations, SN B020530 and up.

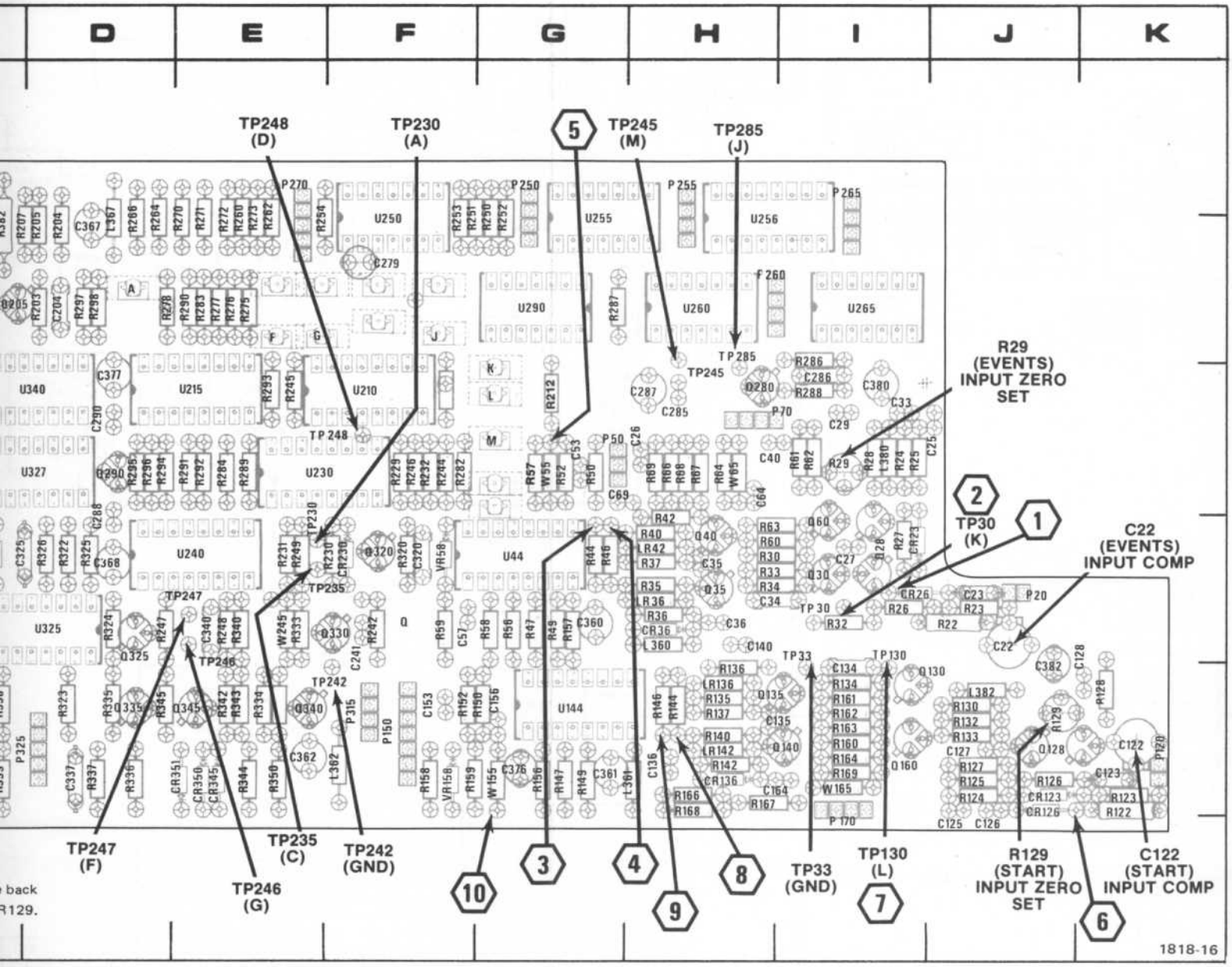

Fig. 7-1. Digital Delay circuit board locations, SN B020530 and up.

CKT NO	GRID LOC	CKT NO	GRID LOC	CKT NO	GRID LOC	CKT NO	GRID LOC	CKT NO	GRID LOC	CKT NO	GRID LOC
C22	4J	CR23	4J	Q340	5F	R146	5H	R290	2E	TP248	3F
C23	4J	CR26	4J	Q345	5E	R147	5G	R291	3E	TP285	2H
C25	3J	CR36	4H	Q348	3C	R149	5G	R292	3E	TP290	3C
C26	3H	CR123	5J			R150	5G	R293	3E	TP366	4C
C27	4I	CR126	5J	R22	4J	R152	5G	R294	3E	TP386	2B
C29	3I	CR136	5H	R23	4J	R156	5G	R295	3D		
C33	3I	CR230	4F	R24	3I	R157	4G	R296	3D	U44	4G
C34	4I	CR282	2E	R25	3J	R158	5F	R297	2D	U144	5G
C35	4H	CR336	4C	R26	4I	R159	5G	R298	2D	U200	3B
C36	4H	CR337	4C	R27	4I	R160	5I	R320	4F	U210	3F
C40	3I	CR345	5E	R28	3I	R161	5I	R322	4D	U215	3E
C53	3G	CR350	5E	R29	3I	R162	5I	R323	5D	U230	3F
C57	4G	CR351	5E	R30	4I	R163	5I	R324	4D	U240	4E
C64	3I	CR366	3B	R32	4I	R164	5I	R325	4D	U250	2F
C69	3H	CR386	2B	R33	4I	R166	5H	R326	4D	U255	2G
C122	5K			R34	4I	R167	5I	R327	5C	U256	2I
C123	5K	F366	4B	R35	4H	R168	5H	R328	5C	U260	2H
C125	6J	F386	4B	R36	4H	R169	5I	R333	4E	U265	2I
C126	6J			R37	4H	R203	2D	R334	5E	U290	2G
C127	5J	L360	4H	R40	4H	R204	2D	R335	5D	U325	4D
C128	4K	L361	5H	R42	4H	R205	2D	R336	5D	U327	3D
C134	5I	L362	5F	R44	4G	R206	2C	R337	5D	U340	3D
C135	5I	L363	4C	R46	4G	R207	2D	R338	5C	U360	5B
C136	5H	L367	2D	R47	4G	R212	3G	R339	5C	U380	2B
C140	4I	L380	3I	R49	4G	R229	3F	R340	4E		
C153	5F	L382	5J	R50	3G	R230	4F	R342	5E	VR58	4F
C156	5G			R52	3G	R231	4E	R343	5E	VR158	5F
C164	5I	P20	4J	R56	4G	R232	3F	R344	5E	VR366	4B
C204	2D	P50	3H	R57	3G	R242	4F	R345	5E	VR386	2C
C241	4F	P70	3I	R58	4G	R245	3E	R346	3C		
C279	2F	P120	5K	R59	4F	R246	3F	R347	3C	W36	4H
C285	3H	P150	5F	R60	4I	R247	4E	R348	3C	W42	4H
C286	3I	P170	6I	R61	3I	R248	4E	R350	5E	W55	3G
C287	3H	P250	1G	R62	3I	R249	4E	R352	5C	W65	3H
C288	4D	P255	1H	R63	4I	R250	2G	R353	5C	W136	5H
C290	3D	P260	2I	R64	3H	R251	2G	R360	4B	W142	5H
C320	4F	P265	1I	R66	3H	R252	2G	R361	4B	W155	5G
C325	4D	P270	1E	R67	3H	R253	2F	R362	5B	W165	5I
C337	5D	P315	5F	R68	3H	R254	1F	R363	3B	W245	4E
C340	4E	P325	5D	R69	3H	R260	2E	R364	4B		
C347	3C			R122	5K	R262	2E	R366	4B		
C359	5B	Q28	4I	R123	5K	R264	2E	R375	5B		
C360	4G	Q30	4I	R124	5J	R266	2D	R380	2C		
C361	5G	Q35	4H	R125	5J	R270	2E	R382	2C		
C362	5E	Q40	4H	R126	5J	R271	2E	R383	2C		
C363	3C	Q60	4I	R127	5J	R272	2E	R384	2C		
C364	4C	Q128	5J	R128	5K	R273	2E	R385	3B		
C365	2B	Q130	5J	R129	5J	R275	2E	R386	2C		
C366	5C	Q135	5I	R130	5J	R276	2E				
C367	2D	Q140	5I	R132	5J	R277	2E	TP30	4I		
C368	4D	Q160	5I	R133	5J	R278	2E	TP33	4I		
C369	4C	Q205	2D	R134	5I	R280	3F	TP130	4I		
C376	5G	Q280	3I	R135	5H	R282	3E	TP230	4F		
C377	3D	Q290	3D	R136	5H	R283	2E	TP235	4F		
C380	3I	Q320	4F	R137	5H	R284	3E	TP242	5F		
C382	4J	Q325	4D	R140	5H	R286	2I	TP245	2H		
C384	2C	Q330	4F	R142	5H	R287	2H	TP246	4E		
C386	2C	Q335	5D	R144	5H	R289	3E	TP247	4E		

VOLTAGES AND WAVEFORMS

The voltages and waveforms shown on this diagram were obtained using the recommended test equipment and test set-ups listed below.

RECOMMENDED TEST EQUIPMENT

Item	Specifications	Recommended Type
Oscilloscope	Frequency response: Dc to 65 MHz Deflection factor: 5 mV to 5 V/div Input impedance: 10 MΩ, 20 pF Sweep rate: 500 ns	Tektronix 7603 or 7613 equipped with 7A15A Amplifier and 7B53A Time-Base unit, or equivalent. A 7A13 Differential Comparator was used to obtain offset.
Probe	Fast rise 10X attenuation probe compatible with the vertical amplifier of the test oscilloscope.	Tektronix P6053B, or equivalent.
Voltmeter (Non-Loading Digital Multimeter)	Input impedance: 10 MΩ Range: 0 to 500 V	Tektronix 7D13 Digital Multimeter (test oscilloscope must have readout system) or Tektronix DM 501 Digital Multimeter with power module, or equivalent.

VOLTAGE MEASUREMENTS

Voltage measurements on this diagram were made under the following conditions:

Set EVENTS DELAY COUNT switches to 00010
Set EVENTS and START SLOPE switches to IN:+
Set EVENTS and START LEVEL controls to 0 (zero, mid-range)
NO signal to INPUTs
Voltmeter common is connected to chassis ground

WAVEFORMS

Waveforms shown on this diagram were obtained under the following conditions:

DD 501 UNDER TEST

Front-panel controls are set the same as for voltage measurements. The test oscilloscope 0.4 Volts calibrator signal is applied to both the EVENTS and START INPUTS.

TEST OSCILLOSCOPE

The test oscilloscope is dc coupled and externally triggered from the CALIBRATOR OUTPUT only where 1 kHz calibrator signals are present, and internally triggered on all other waveforms.

Tolerances of voltages and waveforms shown are 20%.

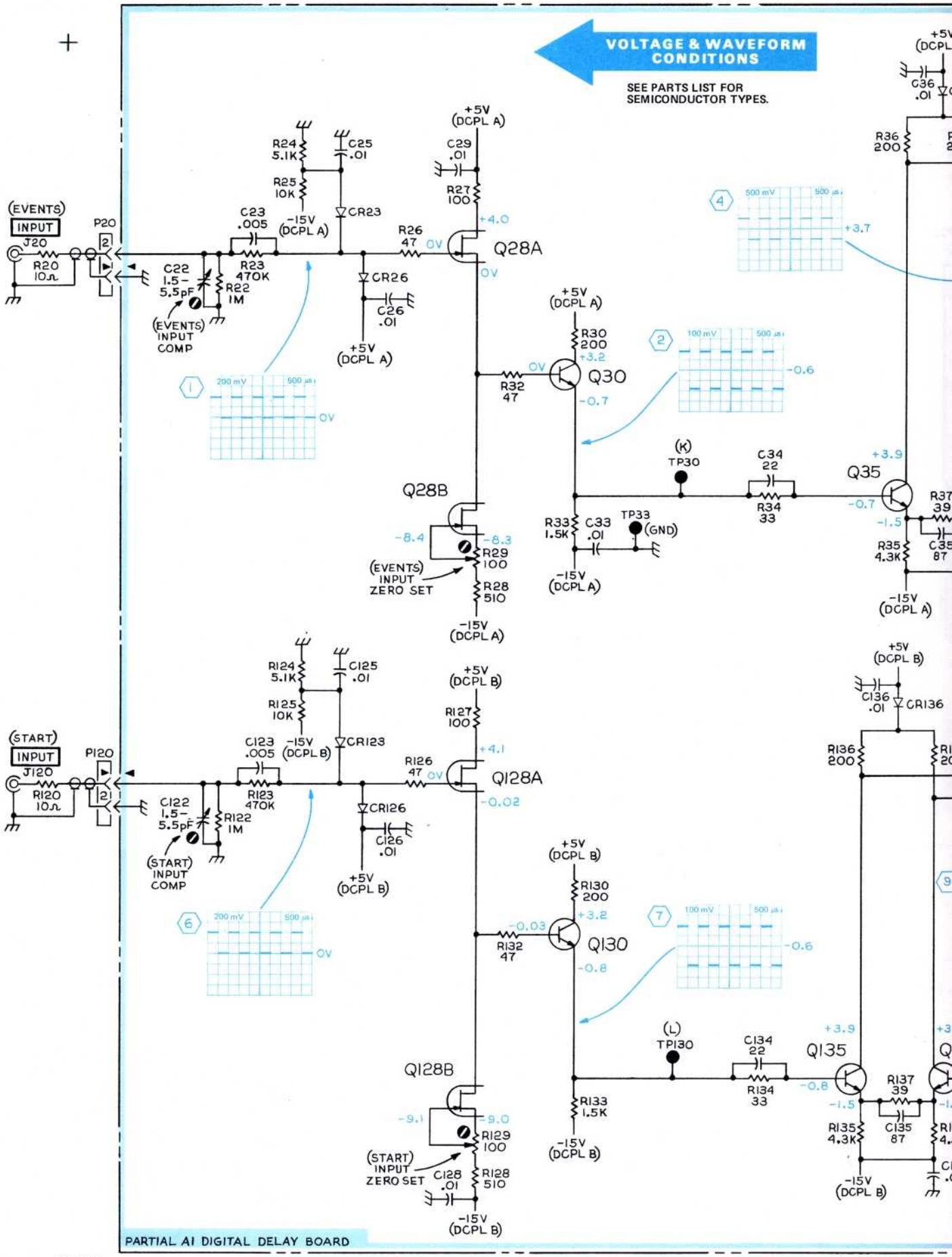
VOLTAGE & WAVEFORM CONDITIONS
SEE PARTS LIST FOR SEMICONDUCTOR TYPES.
(EVENTS) INPUT J20
P20
R20 10Ω
C22 1.5–5.5pF
(EVENTS) INPUT COMP
R22 1M
R23 470K
C23 .005
R24 5.1K
R25 10K
C25 .01
CR23
-15V (DCPL A)
+5V (DCPL A)
C29 .01
R27 100
R26 47
Q28A
+4.0
0V
CR26
C26 .01
+5V (DCPL A)
R30 200
Q30
+3.2
-0.7
R32 47
Q28B
-8.4
-8.3
R29 100
(EVENTS) INPUT ZERO SET
R28 510
-15V (DCPL A)
(K) TP30
C34 22
R34 33
Q35
+3.9
-0.7
R33 1.5K
C33 .01
TP33 (GND)
-15V (DCPL A)
R35 4.3K
-1.5
-15V (DCPL A)
R36 200
+5V (DCPL A)
C36 .01
(START) INPUT J120
P120
R120 10Ω
C122 1.5–5.5pF
(START) INPUT COMP
R122 1M
R123 470K
C123 .005
-15V (DCPL B)
R124 5.1K
R125 10K
C125 .01
CR123
+5V (DCPL B)
R127 100
R126 47
Q128A
+4.1
-0.02
CR126
C126 .01
+5V (DCPL B)
R130 200
Q130
+3.2
-0.8
R132 47
-0.03
Q128B
-9.1
-9.0
R129 100
(START) INPUT ZERO SET
C128 .01
R128 510
-15V (DCPL B)
(L) TP130
C134 22
R134 33
Q135
+3.9
-0.8
R133 1.5K
-15V (DCPL B)
R135 4.3K
-1.5
R137 39
C135 87
-15V (DCPL B)
C136 .01
CR136
R136 200
+5V (DCPL B)
PARTIAL A1 DIGITAL DELAY BOARD
DD501

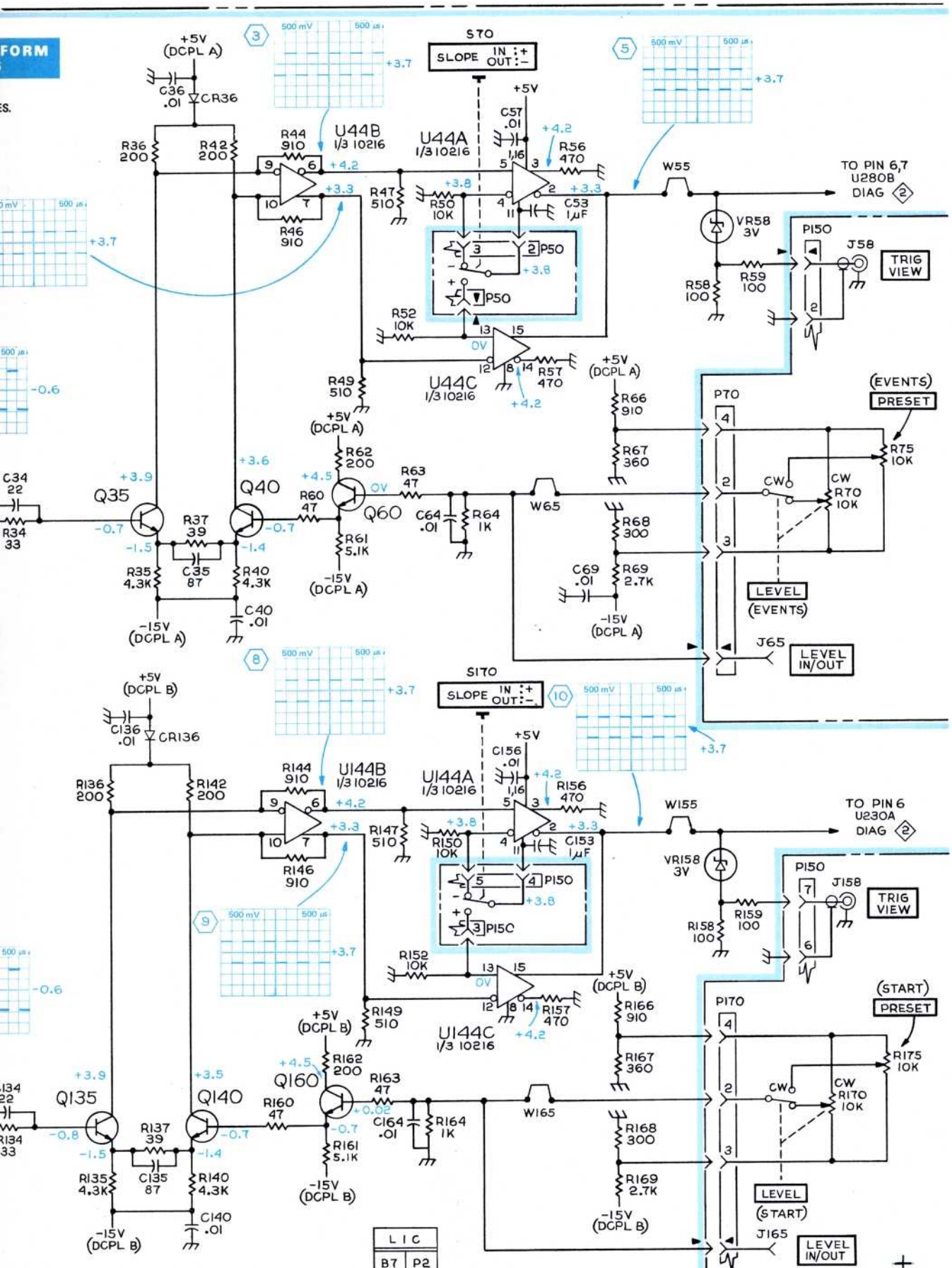
+5V (DCPL A)
C36 .01
CR36
R36 200
R42 200
R44 910
U44B 1/3 10216
+4.2
+3.3
R46 910
R47 510
R50 10K
+3.8
U44A 1/3 10216
C57 .01
R56 470
C53 1µF
S70
SLOPE IN :+ OUT :−
W55
TO PIN 6,7 U280B DIAG 2
VR58 3V
R58 100
R59 100
P150
J58
TRIG VIEW
P50
R52 10K
0V
U44C 1/3 10216
R57 470
R49 510
+5V (DCPL A)
R66 910
R67 360
P70
(EVENTS) PRESET
R75 10K
R62 200
+3.6
+4.5
R63 47
C34 22
R34 33
+3.9
Q35
Q40
Q60
R60 47
R61 5.1K
C64 .01
R64 1K
W65
CW
R70 10K
R37 39
-0.7
-1.5
-1.4
R35 4.3K
C35 87
R40 4.3K
C40 .01
-15V (DCPL A)
R68 300
R69 2.7K
C69 .01
LEVEL (EVENTS)
J65
LEVEL IN/OUT
S170
SLOPE IN :+ OUT :−
+5V (DCPL B)
C136 .01
CR136
R136 200
R142 200
R144 910
U144B 1/3 10216
U144A 1/3 10216
C156 .01
R156 470
W155
TO PIN 6 U230A DIAG 2
R147 510
R150 10K
C153 1µF
VR158 3V
R158 100
R159 100
P150
J158
TRIG VIEW
P150C
R152 10K
U144C 1/3 10216
R157 470
R149 510
R166 910
R167 360
P170
(START) PRESET
R175 10K
R162 200
R163 47
Q135
Q140
Q160
R160 47
R137 39
R135 4.3K
C135 87
R140 4.3K
C140 .01
C164 .01
R164 1K
W165
R161 5.1K
R168 300
R169 2.7K
LEVEL (START)
J165
LEVEL IN/OUT
L I C
B7 P2

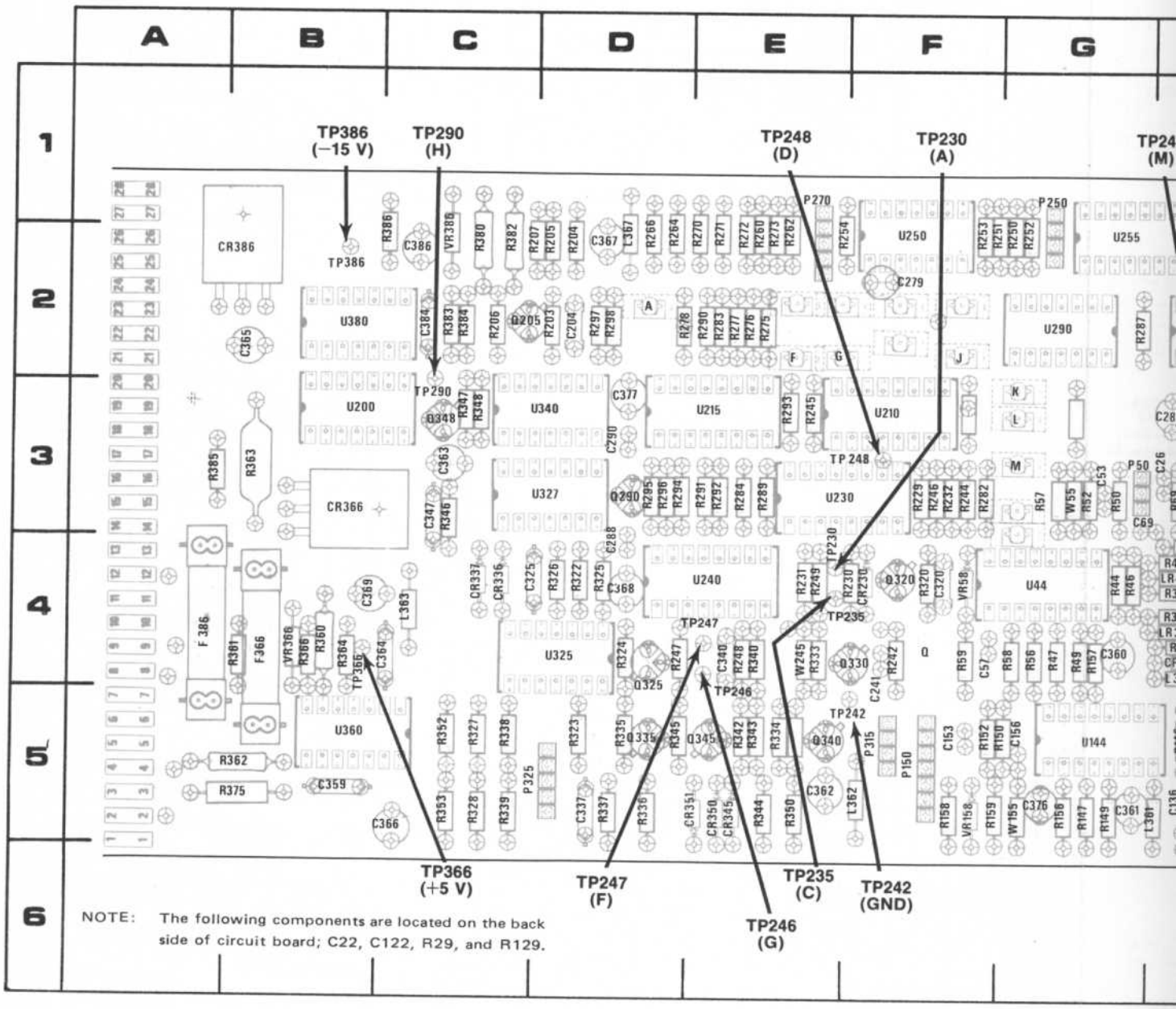

Fig. 7-2A. A1-Digital Delay circuit board component locations, SN B020530 and up.

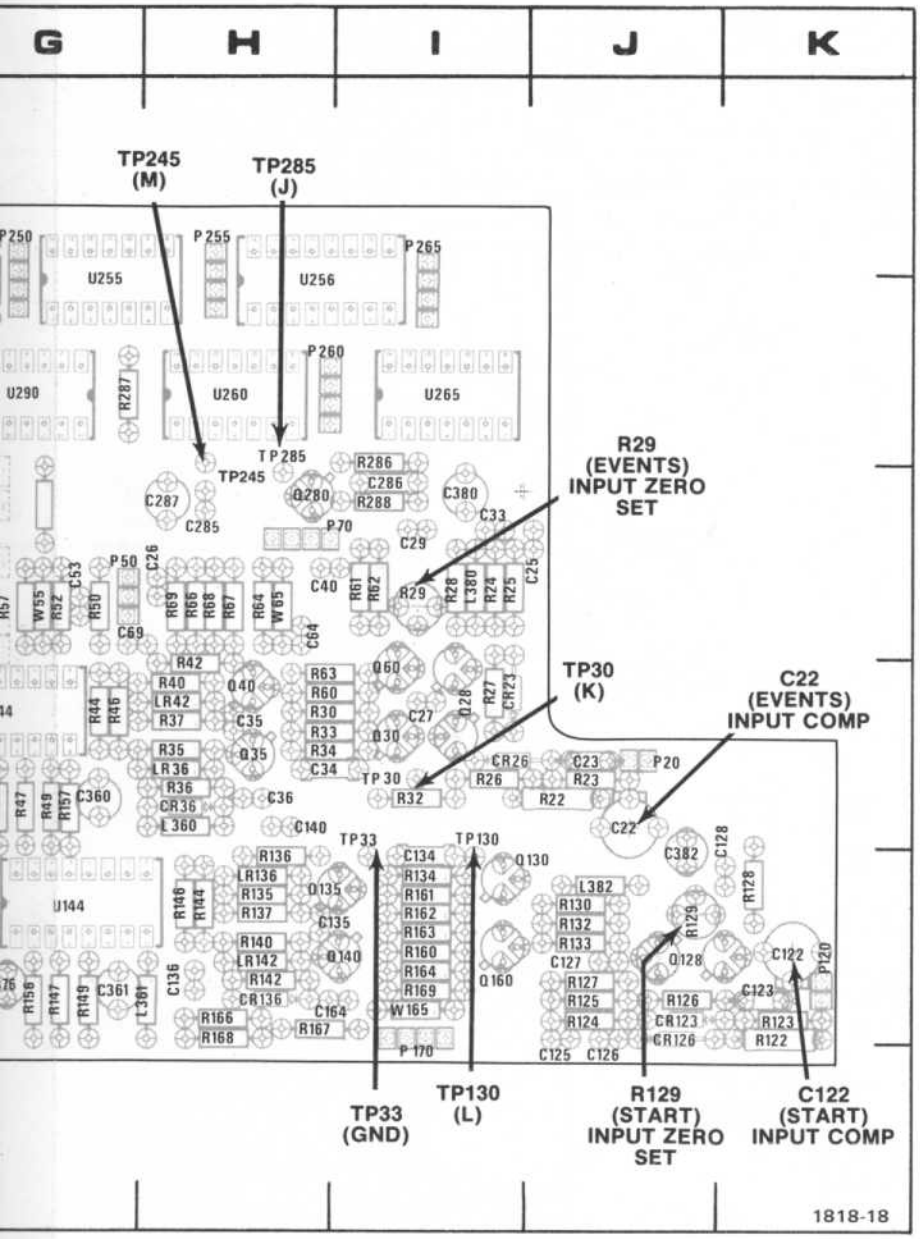

and up.

CKT NO	GRID LOC	CKT NO	GRID LOC	CKT NO	GRID LOC	CKT NO
C22	4J	CR23	4J	Q340	5F	R14
C23	4J	CR26	4J	Q345	5E	R14
C25	3J	CR36	4H	Q348	3C	R14
C26	3H	CR123	5J			R15
C27	4I	CR126	5J	R22^	4J	R15
C29	3I	CR136	5H	R23	4J	R15
C33	3I	CR230	4F	R24	3I	R15
C34	4I	CR282	2E	R25	3J	R15
C35	4H	CR336	4C	R26	4I	R15
C36	4H	CR337	4C	R27	4I	R16
C40	3I	CR345	5E	R28	3I	R16
C53	3G	CR350	5E	R29	3I	R16
C57	4G	CR351	5E	R30	4I	R16
C64	3I	CR366	3B	R32	4I	R16
C69	3H	CR386	2B	R33	4I	R16
C122	5K			R34	4I	R16
C123	5K	F366	4B	R35	4H	R16
C125	6J	F386	4B	R36	4H	R16
C126	6J			R37	4H	R20
C127	5J	L360	4H	R40	4H	R20
C128	4K	L361	5H	R42	4H	R20
C134	5I	L362	5F	R44	4G	R20
C135	5I	L363	4C	R46	4G	R20
C136	5H	L367	2D	R47	4G	R21
C140	4I	L380	3I	R49	4G	R22
C153	5F	L382	5J	R50	3G	R23
C156	5G			R52	3G	R23
C164	5I	P20	4J	R56	4G	R23
C204	2D	P50	3H	R57	3G	R24
C241	4F	P70	3I	R58	4G	R24
C279	2F	P120	5K	R59	4F	R24
C285	3H	P150	5F	R60	4I	R24
C286	3I	P170	6I	R61	3I	R24
C287	3H	P250	1G	R62	3I	R24
C288	4D	P255	1H	R63	4I	R25
C290	3D	P260	2I	R64	3H	R25
C320	4F	P265	1I	R66	3H	R25
C325	4D	P270	1E	R67	3H	R25
C337	5D	P315	5F	R68	3H	R25
C340	4E	P325	5D	R69	3H	R26
C347	3C			R122	5K	R26
C359	5B	Q28	4I	R123	5K	R26
C360	4G	Q30	4I	R124	5J	R26
C361	5G	Q35	4H	R125	5J	R27
C362	5E	Q40	4H	R126	5J	R27
C363	3C	Q60	4I	R127	5J	R27
C364	4C	Q128	5J	R128	5K	R27
C365	2B	Q130	5J	R129	5J	R27
C366	5C	Q135	5I	R130	5J	R27
C367	2D	Q140	5I	R132	5J	R27
C368	4D	Q160	5I	R133	5J	R27
C369	4C	Q205	2D	R134	5I	R28
C376	5G	Q280	3I	R135	5H	R28
C377	3D	Q290	3D	R136	5H	R28
C380	3I	Q320	4F	R137	5H	R28
C382	4J	Q325	4D	R140	5H	R28
C384	2C	Q330	4F	R142	5H	R28
C386	2C	Q335	5D	R144	5H	R28

ID C	CKT NO	GRID LOC	CKT NO	GRID LOC	CKT NO	GRID LOC
	R146	5H	R290	2E	TP248	3F
	R147	5G	R291	3E	TP285	2H
	R149	5G	R292	3E	TP290	3C
	R150	5G	R293	3E	TP366	4C
	R152	5G	R294	3E	TP386	2B
	R156	5G	R295	3D		
	R157	4G	R296	3D	U44	4G
	R158	5F	R297	2D	U144	5G
	R159	5G	R298	2D	U200	3B
	R160	5I	R320	4F	U210	3F
	R161	5I	R322	4D	U215	3E
	R162	5I	R323	5D	U230	3F
	R163	5I	R324	4D	U240	4E
	R164	5I	R325	4D	U250	2F
	R166	5H	R326	4D	U255	2G
	R167	5I	R327	5C	U256	2I
	R168	5H	R328	5C	U260	2H
	R169	5I	R333	4E	U265	2I
	R203	2D	R334	5E	U290	2G
	R204	2D	R335	5D	U325	4D
	R205	2D	R336	5D	U327	3D
	R206	2C	R337	5D	U340	3D
	R207	2D	R338	5C	U360	5B
	R212	3G	R339	5C	U380	2B
	R229	3F	R340	4E		
	R230	4F	R342	5E	VR58	4F
	R231	4E	R343	5E	VR158	5F
	R232	3F	R344	5E	VR366	4B
	R242	4F	R345	5E	VR386	2C
	R245	3E	R346	3C		
	R246	3F	R347	3C	W36	4H
	R247	4E	R348	3C	W42	4H
	R248	4E	R350	5E	W55	3G
	R249	4E	R352	5C	W65	3H
	R250	2G	R353	5C	W136	5H
	R251	2G	R360	4B	W142	5H
	R252	2G	R361	4B	W155	5G
	R253	2F	R362	5B	W165	5I
	R254	1F	R363	3B	W245	4E
	R260	2E	R364	4B		
	R262	2E	R366	4B		
	R264	2E	R375	5B		
	R266	2D	R380	2C		
	R270	2E	R382	2C		
	R271	2E	R383	2C		
	R272	2E	R384	2C		
	R273	2E	R385	3B		
	R275	2E	R386	2C		
	R276	2E				
	R277	2E	TP30	4I		
	R278	2E	TP33	4I		
	R280	3F	TP130	4I		
	R282	3E	TP230	4F		
	R283	2E	TP235	4F		
	R284	3E	TP242	5F		
	R286	2I	TP245	2H		
	R287	2H	TP246	4E		
	R289	3E	TP247	4E		

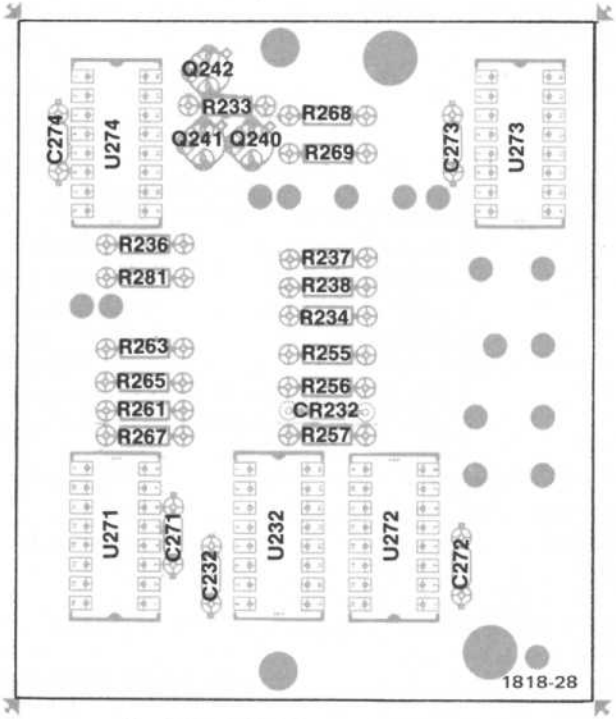

Fig. 7-2B. A1A1-Counter Side Board.

VOLTAGES AND WAVEFORMS

The voltages and waveforms shown on this diagram were obtained using the recommended test equipment and test set-ups listed below.

RECOMMENDED TEST EQUIPMENT

Item	Specifications		Recommended Type
Oscilloscope	Frequency response: Deflection factor: Input impedance: Sweep rate:	Dc to 65 MHz 5 mV to 5 V/div 10 MΩ, 20 pF 500 ns	Tektronix 7603 or 7613 equipped with 7A15A Amplifier and 7B53A Time-Base unit, or equivalent. A 7A13 Differential Comparator was used to obtain offset.
Probe	Fast rise 10X attenuation probe compatible with the vertical amplifier of the test oscilloscope.		Tektronix P6053B, or equivalent.
Voltmeter (Non-Loading Digital Multimeter)	Input impedance: Range:	10 MΩ 0 to 500 V	Tektronix 7D13 Digital Multimeter (test oscilloscope must have readout system) or Tektronix DM 501 Digital Multimeter with power module, or equivalent.

VOLTAGE MEASUREMENTS

Voltage measurements on this diagram were made under the following conditions:

Set EVENTS DELAY COUNT switches to 00010
Set EVENTS and START SLOPE switches to IN:+
Set EVENTS and START LEVEL controls to 0 (zero, mid-range)
NO signal to INPUTs
Voltmeter common is connected to chassis ground

WAVEFORMS

Waveforms shown on this diagram were obtained under the following conditions:

DD 501 UNDER TEST

Front-panel controls are set the same as for voltage measurements. The test oscilloscope 0.4 Volts calibrator signal is applied to both the EVENTS and START INPUTS.

TEST OSCILLOSCOPE

The test oscilloscope is dc coupled and externally triggered from the CALIBRATOR OUTPUT only where 1 kHz calibrator signals are present, and internally triggered on all other waveforms.

Tolerances of voltages and waveforms shown are 20%.

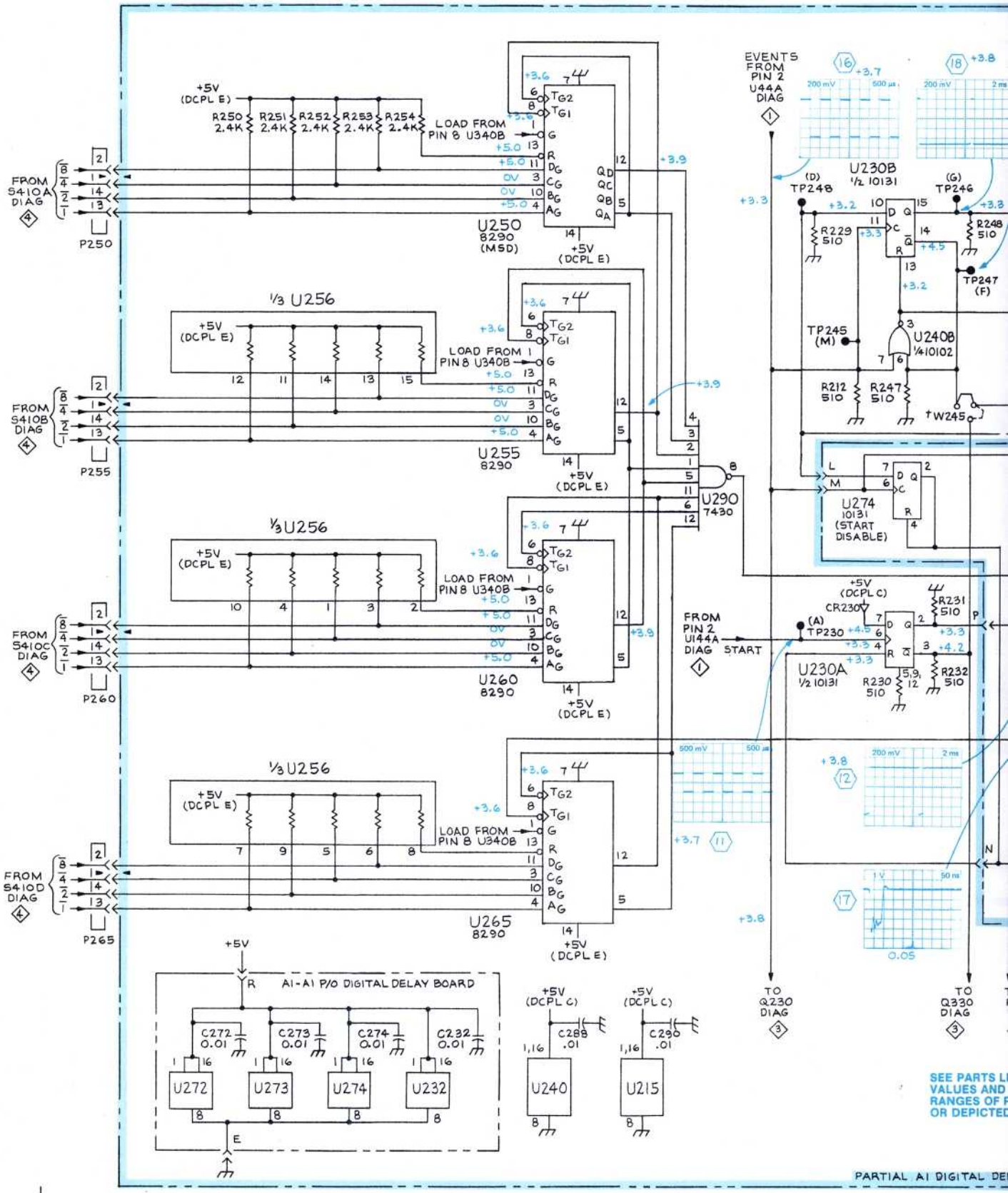

REV. B, FEB. 1977
1818-19

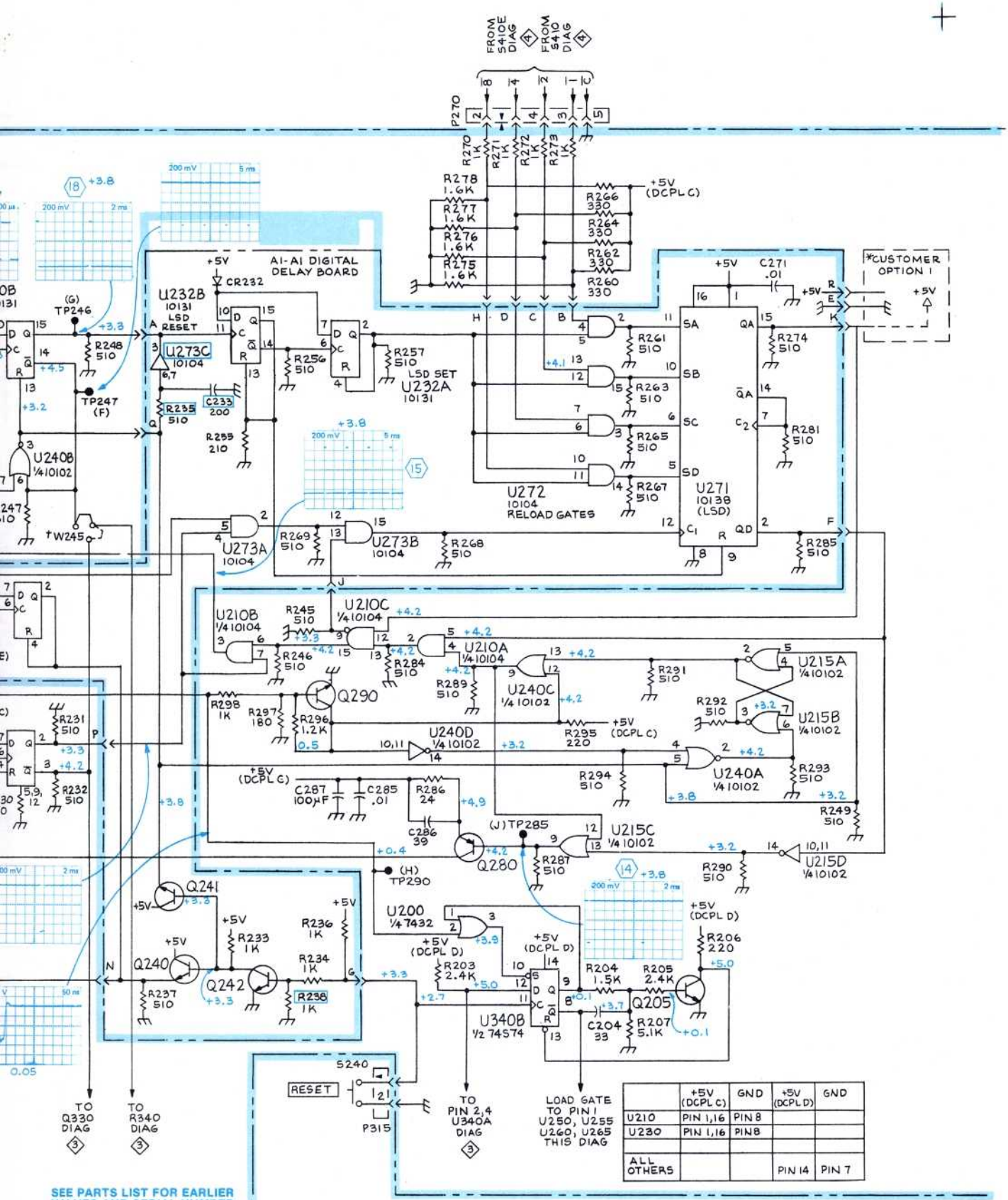

	+5V (DCPL C)	GND	+5V (DCPL D)	GND
U210	PIN 1,16	PIN 8		
U230	PIN 1,16	PIN 8		
ALL OTHERS			PIN 14	PIN 7

NOTES:
CUSTOMER OPTIONS: * PERMITS OUTPUT AT "N" INSTEAD OF "N+1" EVENTS. A SILICON DIODE IS USED.

† W245 STRAP PERMITS DELAYED TRIGGER OUT (AS SHOWN) OR DELAY INTERVAL OUT FROM START SIGNAL TO N+1TH (NTH) EVENT.

COUNTER CIRCUIT ◇2
(SN B020530 & UP)

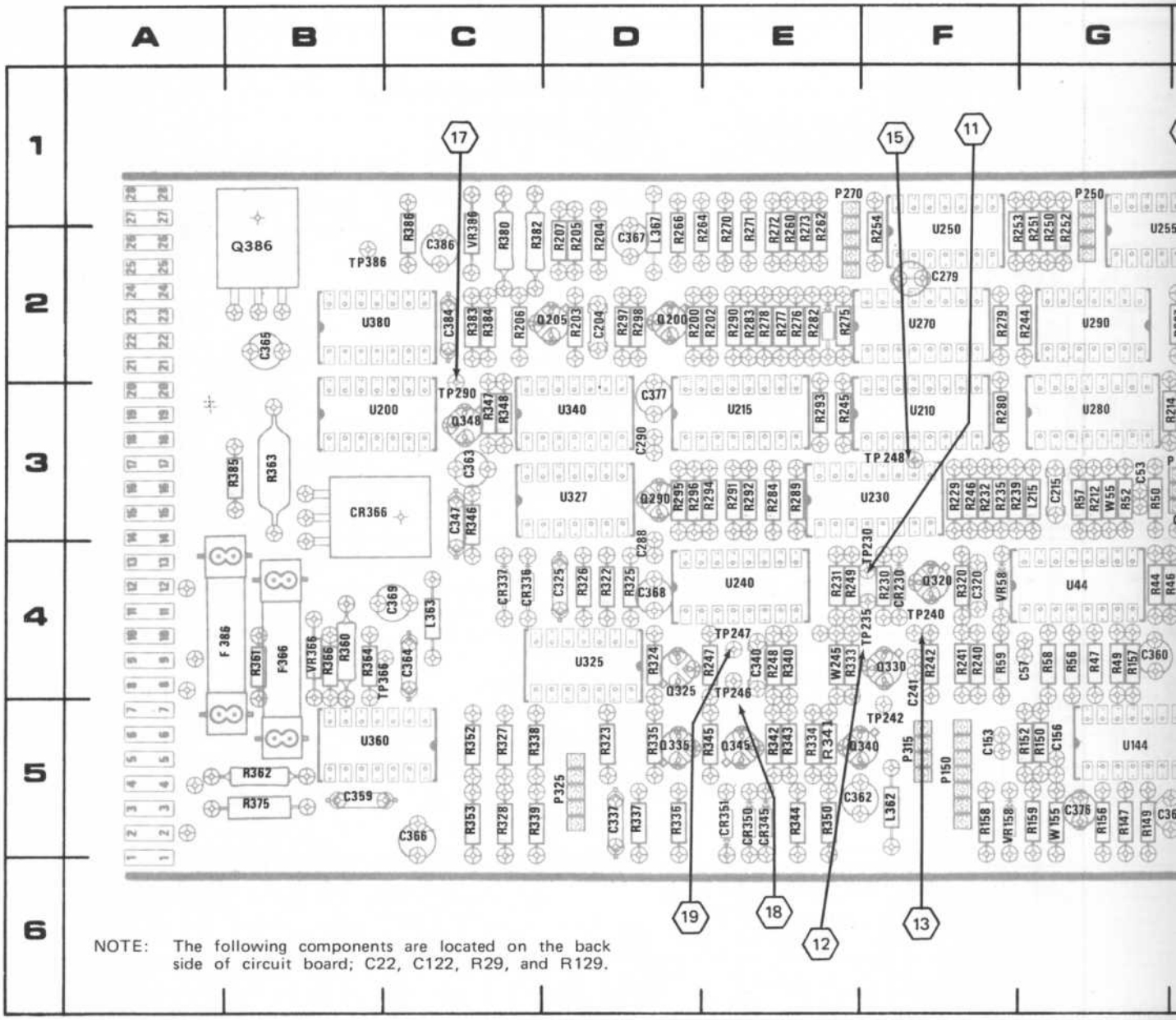

Fig. 7-2C. A1 Digital Delay circuit board component locations, SN B020529 a

ASSEMBLY A1 SN B020529 AND BELOW

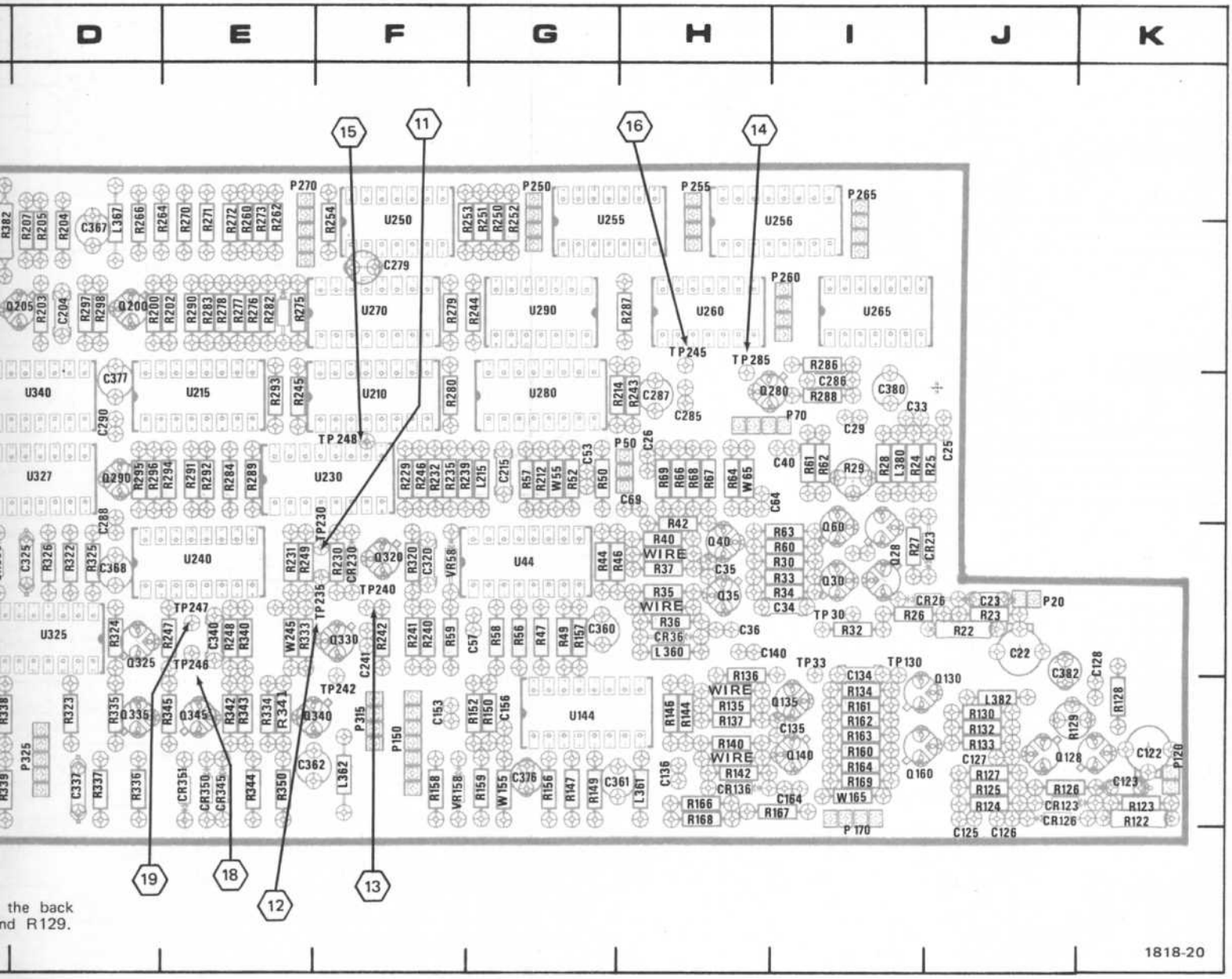

Fig. 7-2C. A1 Digital Delay circuit board component locations, SN B020529 and below.

CKT NO	GRID LOC	CKT NO	GRID LOC	CKT NO	GRID LOC	CKT NO	GRID LOC	CKT NO	GRID LOC	CKT NO	GRID LOC
C22	4J	CR23	4J	Q280	3I	R136	5H	R272	2E	R384	2C
C23	4J	CR26	4J	Q290	3D	R137	5H	R273	2E	R385	3B
C26	3H	CR36	4H	Q320	4F	R140	5H	R275	2E	R386	2C
C27	4I	CR123	5J	Q325	4D	R142	5H	R276	2E		
C29	3I	CR126	5J	Q330	4F	R144	5H	R277	2E	TP30	4I
C25	3J	CR136	5H	Q335	5D	R146	5H	R278	2E	TP33	4I
C33	3I	CR230	4F	Q340	5F	R147	5G	R279	2F	TP130	4I
C34	4I	CR282	2E	Q345	5E	R149	5G	R280	3F	TP230	4F
C35	4H	CR336	4C	Q348	3C	R150	5G	R282	2E	TP235	4F
C36	4H	CR337	4C			R152	5G	R283	2E	TP240	4F
C40	3I	CR345	5E	R22	4J	R156	5G	R284	3E	TP242	5F
C53	3G	CR350	5E	R23	4J	R157	4G	R286	2I	TP245	2H
C57	4G	CR351	5E	R24	3I	R158	5F	R287	2H	TP246	4E
C64	3I	CR366	3B	R25	3J	R159	5G	R289	3E	TP247	4E
C69	3H	CR386	2B	R26	4I	R160	5I	R290	2E	TP248	3F
C122	5K			R27	4I	R161	5I	R291	3E	TP285	2H
C123	5K	F366	4B	R28	3I	R162	5I	R292	3E	TP290	3C
C125	6J	F386	4B	R29	3I	R163	5I	R293	3E	TP366	4C
C126	6J			R30	4I	R164	5I	R294	3E	TP386	2B
C127	5J	L215	3G	R32	4I	R166	5H	R295	3D		
C128	4K	L360	4H	R33	4I	R167	5I	R296	3D	U44	4G
C134	5I	L361	5H	R34	4I	R168	5H	R297	2D	U144	5G
C135	5I	L363	4C	R35	4H	R169	5I	R298	2D	U200	3B
C136	5H	L362	5F	R36	4H	R200	2D	R320	4F	U210	3F
C140	4I	L367	2D	R37	4H	R202	2E	R322	4D	U215	3E
C153	5F	L380	3I	R40	4H	R203	2D	R323	5D	U230	3F
C156	5G	L382	5J	R42	4H	R204	2D	R324	4D	U240	4E
C164	5I			R44	4G	R205	2D	R325	4D	U250	2F
C204	2D			R46	4G	R206	2C	R326	4D	U255	2G
C215	3G			R47	4G	R207	2D	R327	5C	U256	2I
C241	4F			R49	4G	R212	3G	R328	5C	U260	2H
C279	2F			R50	3G	R214	3G	R333	4E	U265	2I
C285	3H			R52	3G	R229	3F	R334	5E	U270	2F
C286	3I	P20	4J	R56	4G	R230	4F	R335	5D	U280	3G
C287	3H	P50	3H	R57	3G	R231	4E	R336	5D	U290	2G
C288	4D	P70	3I	R58	4G	R232	3F	R337	5D	U325	4D
C290	3D	P120	5K	R59	4F	R235	3F	R338	5C	U327	3D
C320	4F	P150	5F	R60	4I	R239	3F	R339	5C	U340	3D
C325	4D	P170	6I	R61	3I	R240	4F	R340	4E	U360	5B
C337	5D	P250	1G	R62	3I	R241	4F	R342	5E	U380	2B
C340	4E	P255	1H	R63	4I	R242	4F	R343	5E		
C347	3C	P260	2I	R64	3H	R243	3H	R344	5E	VR58	4F
C359	5B	P265	1I	R66	3H	R244	2G	R345	5E	VR158	5F
C360	4G	P270	1E	R67	3H	R245	3E	R346	3C	VR366	4B
C361	5G	P315	5F	R68	3H	R246	3F	R347	3C	VR386	2C
C362	5E	P325	5D	R69	3H	R247	4E	R348	3C		
C363	3C			R122	5K	R248	4E	R350	5E	W55	3G
C364	4C	Q28	4I	R123	5K	R249	4E	R352	5C	W65	3H
C365	2B	Q35	4H	R124	5J	R250	2G	R353	5C	W155	5G
C366	5C	Q30	4I	R125	5J	R251	2G	R360	4B	W165	5I
C367	2D	Q40	4H	R126	5J	R252	2G	R361	4B	W245	4E
C368	4D	Q60	4I	R127	5J	R253	2F	R362	5B		
C369	4C	Q130	5J	R128	5K	R254	1F	R363	3B		
C376	5G	Q128	5J	R129	5J	R260	2E	R364	4B		
C377	3D	Q135	5I	R130	5J	R262	2E	R366	4B		
C380	3I	Q140	5I	R132	5J	R264	2E	R375	5B		
C382	4J	Q160	5I	R133	5J	R266	2D	R380	2C		
C384	2C	Q200	2D	R134	5I	R270	2E	R382	2C		
C386	2C	Q205	2D	R135	5H	R271	2E	R383	2C		

VOLTAGES AND WAVEFORMS

The voltages and waveforms shown on this diagram were obtained using the recommended test equipment and test set-ups listed below.

RECOMMENDED TEST EQUIPMENT

Item	Specifications	Recommended Type
Oscilloscope	Frequency response: Dc to 65 MHz Deflection factor: 5 mV to 5 V/div Input impedance: 10 MΩ, 20 pF Sweep rate: 500 ns	Tektronix 7603 or 7613 equipped with 7A15A Amplifier and 7B53A Time-Base unit, or equivalent. A 7A13 Differential Comparator was used to obtain offset.
Probe	Fast rise 10X attenuation probe compatible with the vertical amplifier of the test oscilloscope.	Tektronix P6053B, or equivalent.
Voltmeter (Non-Loading Digital Multimeter)	Input impedance: 10 MΩ Range: 0 to 500 V	Tektronix 7D13 Digital Multimeter (test oscilloscope must have readout system) or Tektronix DM 501 Digital Multimeter with power module, or equivalent.

VOLTAGE MEASUREMENTS

Voltage measurements on this diagram were made under the following conditions:

Set EVENTS DELAY COUNT switches to 00010
Set EVENTS and START SLOPE switches to IN:+
Set EVENTS and START LEVEL controls to 0 (zero, mid-range)
NO signal to INPUTs
Voltmeter common is connected to chassis ground

WAVEFORMS

Waveforms shown on this diagram were obtained under the following conditions:

DD 501 UNDER TEST

Front-panel controls are set the same as for voltage measurements. The test oscilloscope 0.4 Volts calibrator signal is applied to both the EVENTS and START INPUTS.

TEST OSCILLOSCOPE

The test oscilloscope is dc coupled and externally triggered from the CALIBRATOR OUTPUT only where 1 kHz calibrator signals are present, and internally triggered on all other waveforms.

Tolerances of voltages and waveforms shown are 20%.

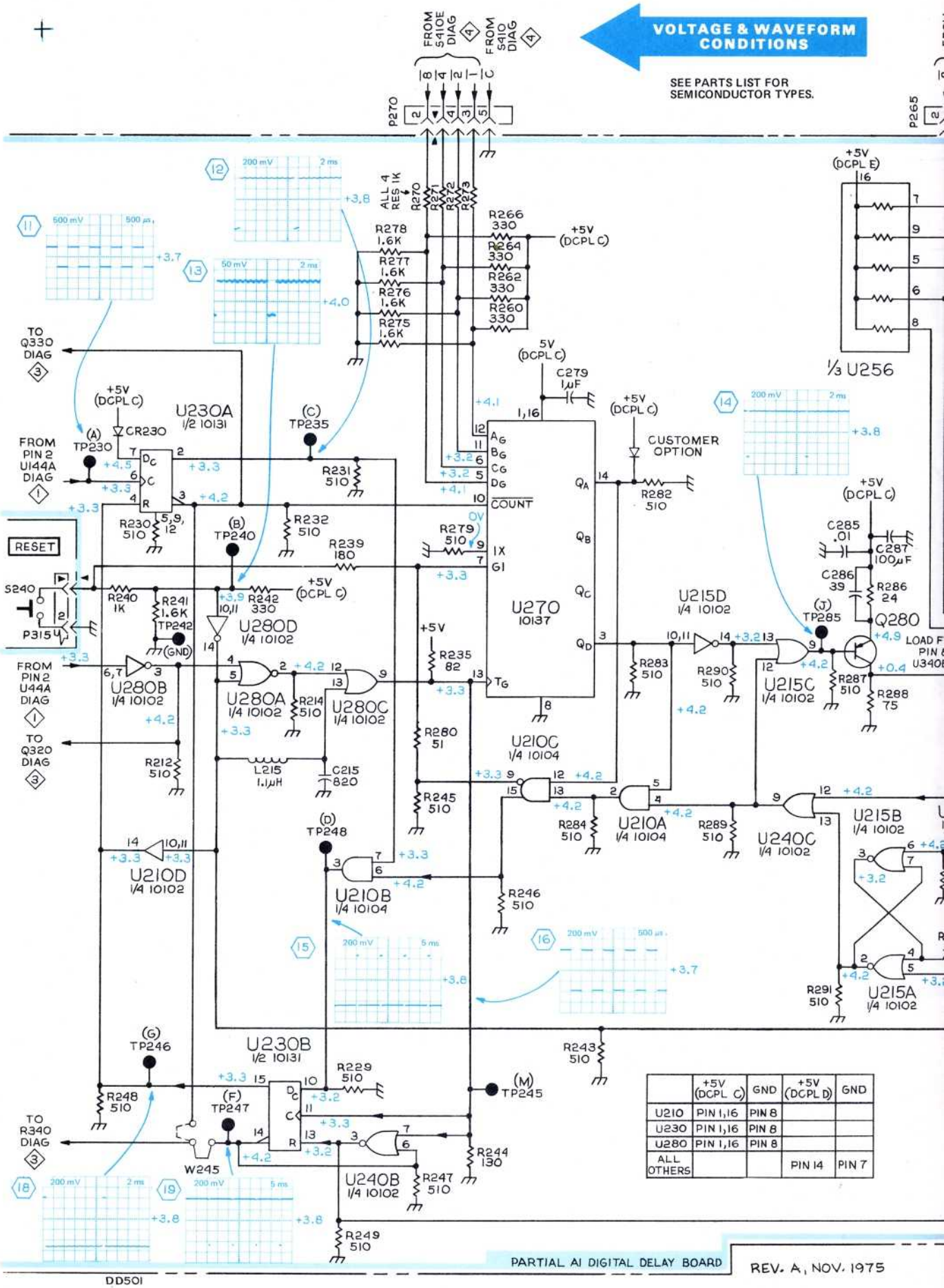

	+5V (DCPL C)	GND	+5V (DCPL D)	GND
U210	PIN 1,16	PIN 8		
U230	PIN 1,16	PIN 8		
U280	PIN 1,16	PIN 8		
ALL OTHERS			PIN 14	PIN 7

PARTIAL A1 DIGITAL DELAY BOARD

REV. A, NOV. 1975

DD501

R
TYPES.

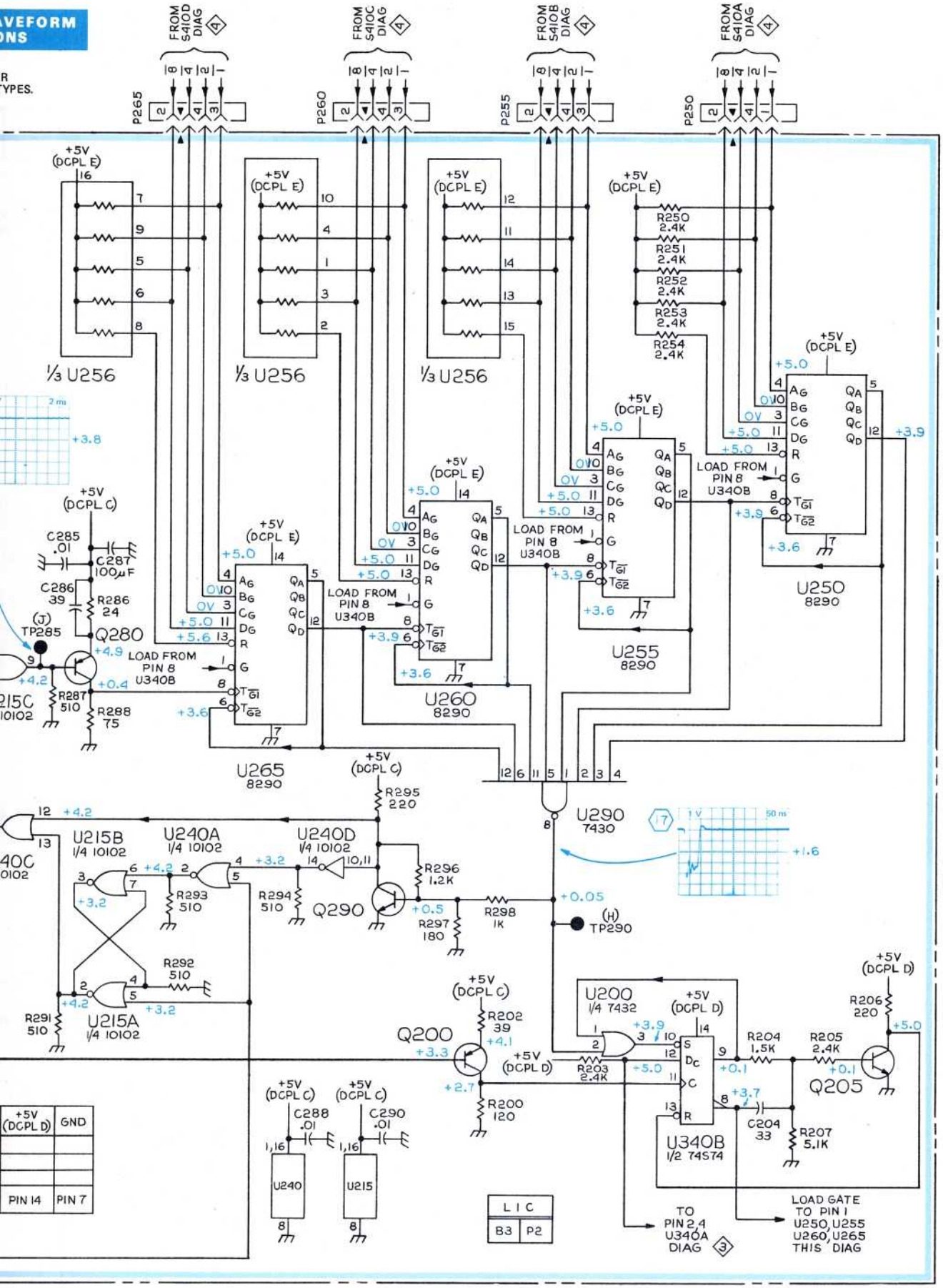

COUNTER CIRCUIT 2 (SN B020529 & BELOW)

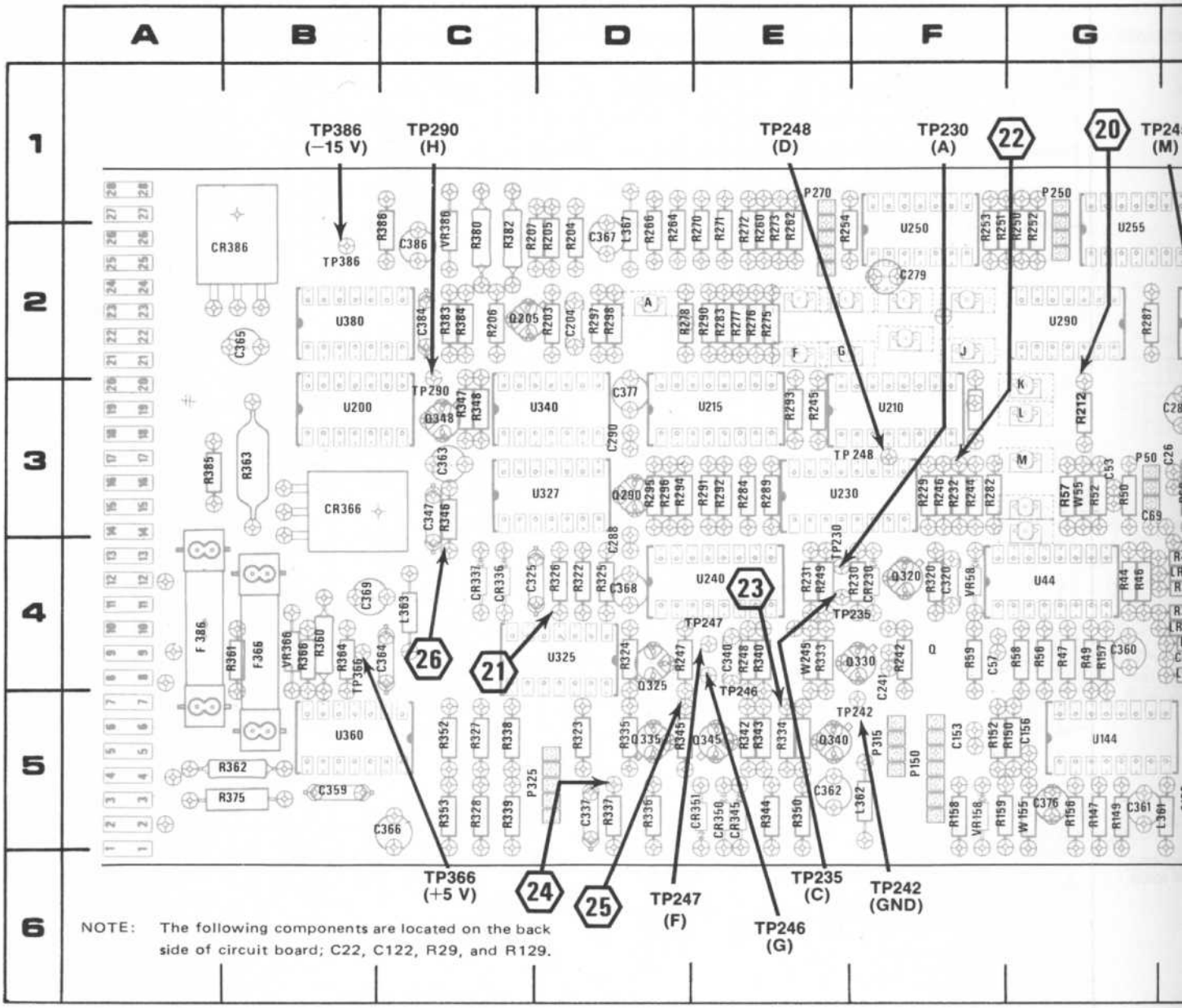

Fig. 7-3. A1-Digital Delay circuit board component locations, SN B020530 and up.

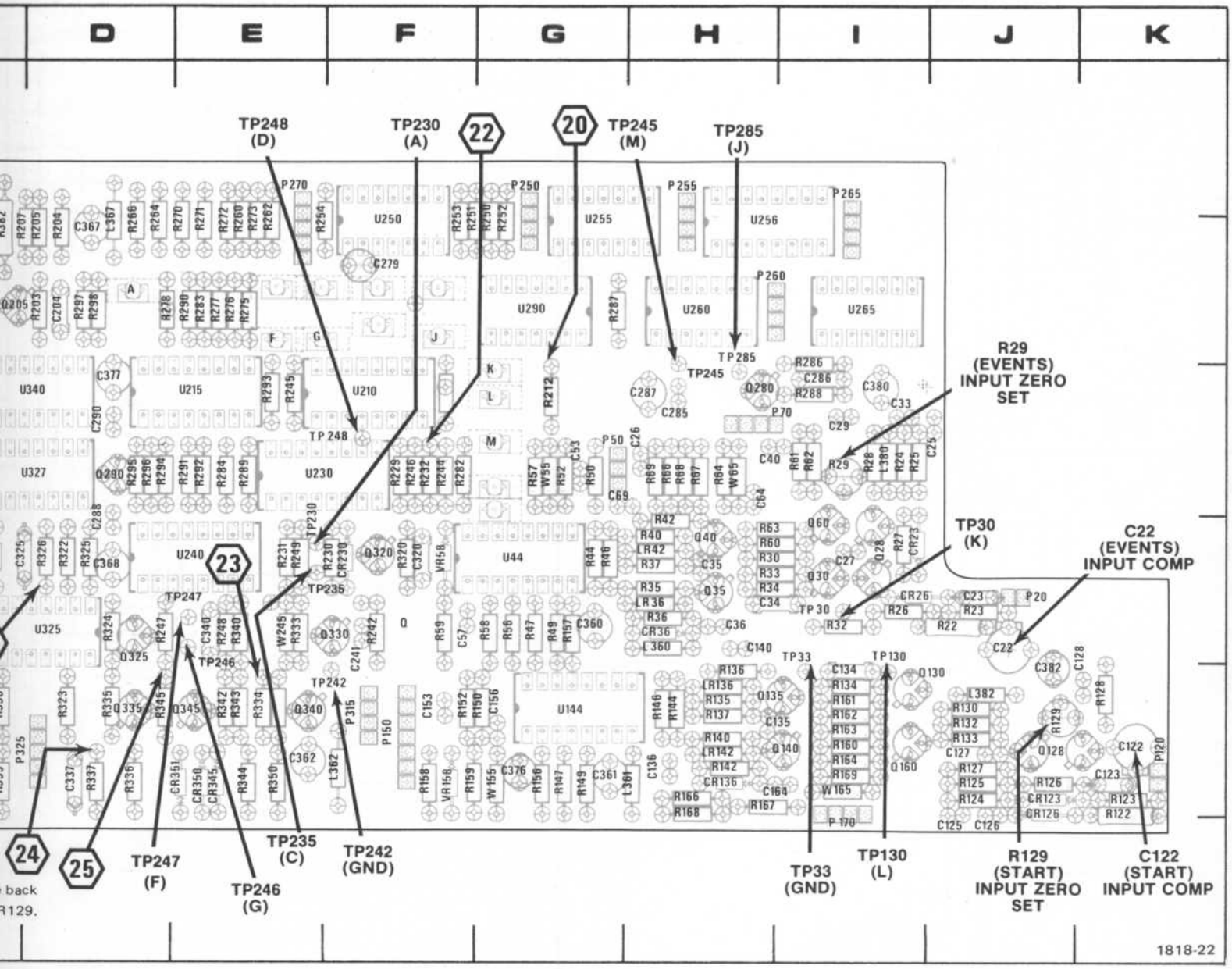

Fig. 7-3. A1-Digital Delay circuit board component locations, SN B020530 and up.

CKT NO	GRID LOC	CKT NO	GRID LOC	CKT NO	GRID LOC	CKT NO	GRID LOC	CKT NO	GRID LOC	CKT NO	GRID LOC
C22	4J	CR23	4J	Q340	5F	R146	5H	R290	2E	TP248	3F
C23	4J	CR26	4J	Q345	5E	R147	5G	R291	3E	TP285	2H
C25	3J	CR36	4H	Q348	3C	R149	5G	R292	3E	TP290	3C
C26	3H	CR123	5J			R150	5G	R293	3E	TP366	4C
C27	4I	CR126	5J	R22	4J	R152	5G	R294	3E	TP386	2B
C29	3I	CR136	5H	R23	4J	R156	5G	R295	3D		
C33	3I	CR230	4F	R24	3I	R157	4G	R296	3D	U44	4G
C34	4I	CR282	2E	R25	3J	R158	5F	R297	2D	U144	5G
C35	4H	CR336	4C	R26	4I	R159	5G	R298	2D	U200	3B
C36	4H	CR337	4C	R27	4I	R160	5I	R320	4F	U210	3F
C40	3I	CR345	5E	R28	3I	R161	5I	R322	4D	U215	3E
C53	3G	CR350	5E	R29	3I	R162	5I	R323	5D	U230	3F
C57	4G	CR351	5E	R30	4I	R163	5I	R324	4D	U240	4E
C64	3I	CR366	3B	R32	4I	R164	5I	R325	4D	U250	2F
C69	3H	CR386	2B	R33	4I	R166	5H	R326	4D	U255	2G
C122	5K			R34	4I	R167	5I	R327	5C	U256	2I
C123	5K	F366	4B	R35	4H	R168	5H	R328	5C	U260	2H
C125	6J	F386	4B	R36	4H	R169	5I	R333	4E	U265	2I
C126	6J			R37	4H	R203	2D	R334	5E	U290	2G
C127	5J	L360	4H	R40	4H	R204	2D	R335	5D	U325	4D
C128	4K	L361	5H	R42	4H	R205	2D	R336	5D	U327	3D
C134	5I	L362	5F	R44	4G	R206	2C	R337	5D	U340	3D
C135	5I	L363	4C	R46	4G	R207	2D	R338	5C	U360	5B
C136	5H	L367	2D	R47	4G	R212	3G	R339	5C	U380	2B
C140	4I	L380	3I	R49	4G	R229	3F	R340	4E		
C153	5F	L382	5J	R50	3G	R230	4F	R342	5E	VR58	4F
C156	5G			R52	3G	R231	4E	R343	5E	VR158	5F
C164	5I	P20	4J	R56	4G	R232	3F	R344	5E	VR366	4B
C204	2D	P50	3H	R57	3G	R242	4F	R345	5E	VR386	2C
C241	4F	P70	3I	R58	4G	R245	3E	R346	3C		
C279	2F	P120	5K	R59	4F	R246	3F	R347	3C	W36	4H
C285	3H	P150	5F	R60	4I	R247	4E	R348	3C	W42	4H
C286	3I	P170	6I	R61	3I	R248	4E	R350	5E	W55	3G
C287	3H	P250	1G	R62	3I	R249	4E	R352	5C	W65	3H
C288	4D	P255	1H	R63	4I	R250	2G	R353	5C	W136	5H
C290	3D	P260	2I	R64	3H	R251	2G	R360	4B	W142	5H
C320	4F	P265	1I	R66	3H	R252	2G	R361	4B	W155	5G
C325	4D	P270	1E	R67	3H	R253	2F	R362	5B	W165	5I
C337	5D	P315	5F	R68	3H	R254	1F	R363	3B	W245	4E
C340	4E	P325	5D	R69	3H	R260	2E	R364	4B		
C347	3C			R122	5K	R262	2E	R366	4B		
C359	5B	Q28	4I	R123	5K	R264	2E	R375	5B		
C360	4G	Q30	4I	R124	5J	R266	2D	R380	2C		
C361	5G	Q35	4H	R125	5J	R270	2E	R382	2C		
C362	5E	Q40	4H	R126	5J	R271	2E	R383	2C		
C363	3C	Q60	4I	R127	5J	R272	2E	R384	2C		
C364	4C	Q128	5J	R128	5K	R273	2E	R385	3B		
C365	2B	Q130	5J	R129	5J	R275	2E	R386	2C		
C366	5C	Q135	5I	R130	5J	R276	2E				
C367	2D	Q140	5I	R132	5J	R277	2E	TP30	4I		
C368	4D	Q160	5I	R133	5J	R278	2E	TP33	4I		
C369	4C	Q205	2D	R134	5I	R280	3F	TP130	4I		
C376	5G	Q280	3I	R135	5H	R282	3E	TP230	4F		
C377	3D	Q290	3D	R136	5H	R283	2E	TP235	4F		
C380	3I	Q320	4F	R137	5H	R284	3E	TP242	5F		
C382	4J	Q325	4D	R140	5H	R286	2I	TP245	2H		
C384	2C	Q330	4F	R142	5H	R287	2H	TP246	4E		
C386	2C	Q335	5D	R144	5H	R289	3E	TP247	4E		

VOLTAGES AND WAVEFORMS

The voltages and waveforms shown on this diagram were obtained using the recommended test equipment and test set-ups listed below.

RECOMMENDED TEST EQUIPMENT

Item	Specifications		Recommended Type
Oscilloscope	Frequency response: Deflection factor: Input impedance: Sweep rate:	Dc to 65 MHz 5 mV to 5 V/div 10 MΩ, 20 pF 500 ns	Tektronix 7603 or 7613 equipped with 7A15A Amplifier and 7B53A Time-Base unit, or equivalent. A 7A13 Differential Comparator was used to obtain offset.
Probe	Fast rise 10X attenuation probe compatible with the vertical amplifier of the test oscilloscope.		Tektronix P6053B, or equivalent.
Voltmeter (Non-Loading Digital Multimeter)	Input impedance: Range:	10 MΩ 0 to 500 V	Tektronix 7D13 Digital Multimeter (test oscilloscope must have readout system) or Tektronix DM 501 Digital Multimeter with power module, or equivalent.

VOLTAGE MEASUREMENTS

Voltage measurements on this diagram were made under the following conditions:

Set EVENTS DELAY COUNT switches to 00010
Set EVENTS and START SLOPE switches to IN:+
Set EVENTS and START LEVEL controls to 0 (zero, mid-range)
NO signal to INPUTs
Voltmeter common is connected to chassis ground

WAVEFORMS

Waveforms shown on this diagram were obtained under the following conditions:

DD 501 UNDER TEST

Front-panel controls are set the same as for voltage measurements. The test oscilloscope 0.4 Volts calibrator signal is applied to both the EVENTS and START INPUTS.

TEST OSCILLOSCOPE

The test oscilloscope is dc coupled and externally triggered from the CALIBRATOR OUTPUT only where 1 kHz calibrator signals are present, and internally triggered on all other waveforms.

Tolerances of voltages and waveforms shown are 20%.

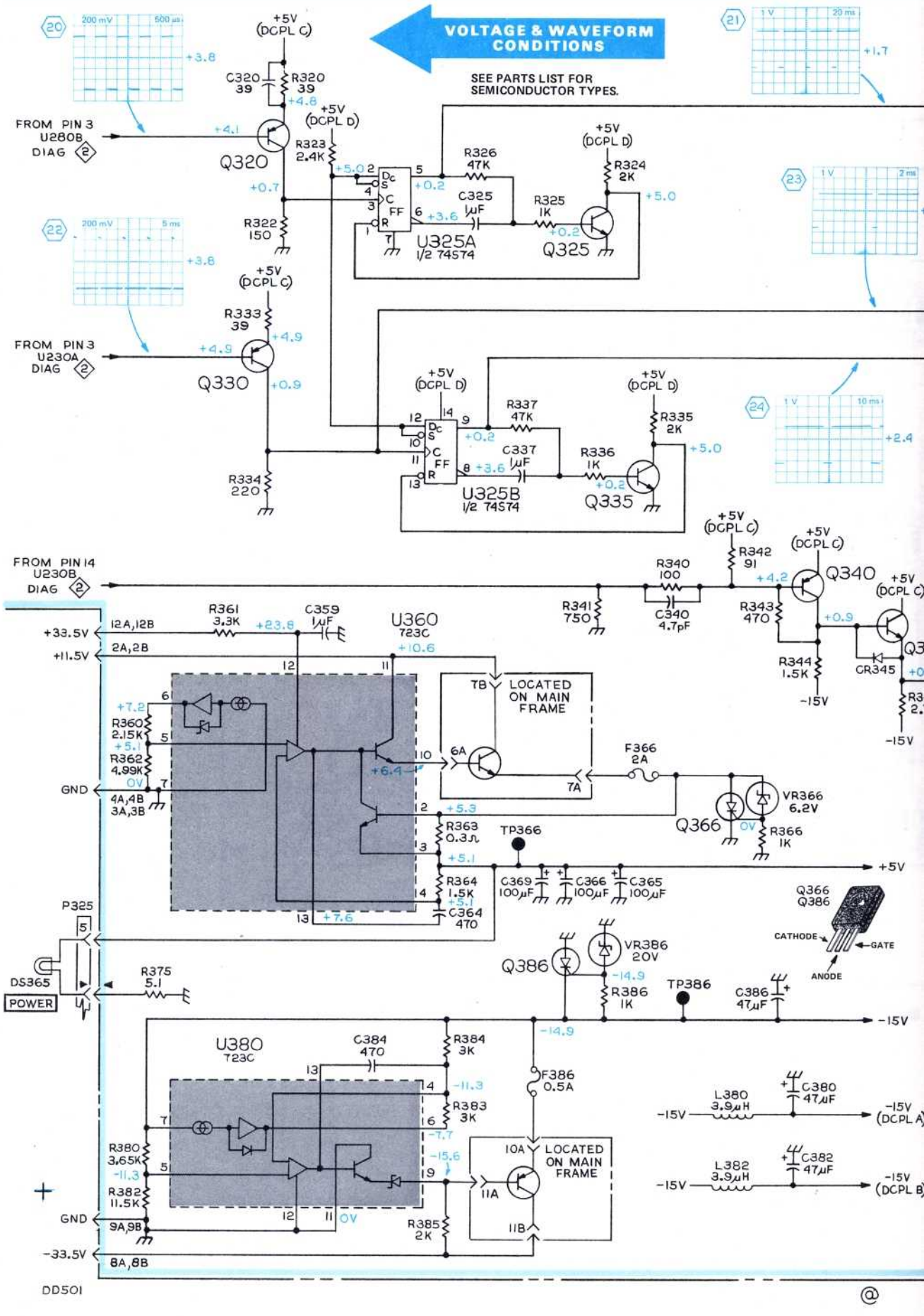
VOLTAGE & WAVEFORM CONDITIONS
SEE PARTS LIST FOR SEMICONDUCTOR TYPES.
20
200 mV
500 µs
+3.8
21
1 V
20 ms
+1.7
22
200 mV
5 ms
+3.8
23
1 V
2 ms
24
1 V
10 ms
+2.4
+5V (DCPL C)
+5V (DCPL D)
C320 39
R320 39
+4.8
FROM PIN 3 U280B DIAG 2
+4.1
Q320
R323 2.4K
+5.0
+0.7
R322 150
U325A 1/2 74S74
R326 47K
C325 1µF
+3.6
+0.2
R325 1K
+0.2
Q325
R324 2K
+5.0
R333 39
+4.9
FROM PIN 3 U230A DIAG 2
+4.9
Q330
+0.9
R334 220
U325B 1/2 74S74
R337 47K
C337 1µF
R336 1K
Q335
R335 2K
FROM PIN 14 U230B DIAG 2
R340 100
C340 4.7pF
R341 750
R342 91
+4.2
Q340
R343 470
+0.9
R344 1.5K
CR345
-15V
+33.5V
+11.5V
GND
-33.5V
12A,12B
2A,2B
4A,4B
3A,3B
9A,9B
8A,8B
R361 3.3K
+23.8
C359 1µF
U360 723C
+10.6
+7.2
R360 2.15K
+5.1
R362 4.99K
0V
+6.4
+7.6
TB
LOCATED ON MAIN FRAME
6A
7A
F366 2A
+5.3
R363 0.3Ω
TP366
+5.1
R364 1.5K
C364 470
C369 100µF
C366 100µF
C365 100µF
+5V
Q366
VR366 6.2V
R366 1K
P325
DS365
POWER
R375 5.1
Q386
VR386 20V
-14.9
R386 1K
TP386
C386 47µF
-15V
U380 723C
C384 470
R384 3K
-11.3
R383 3K
-7.7
-15.6
R380 3.65K
R382 11.5K
10A
11A
11B
LOCATED ON MAIN FRAME
R385 2K
F386 0.5A
L380 3.9µH
C380 47µF
-15V (DCPL A)
L382 3.9µH
C382 47µF
-15V (DCPL B)
Q366 Q386
CATHODE
GATE
ANODE
DD501

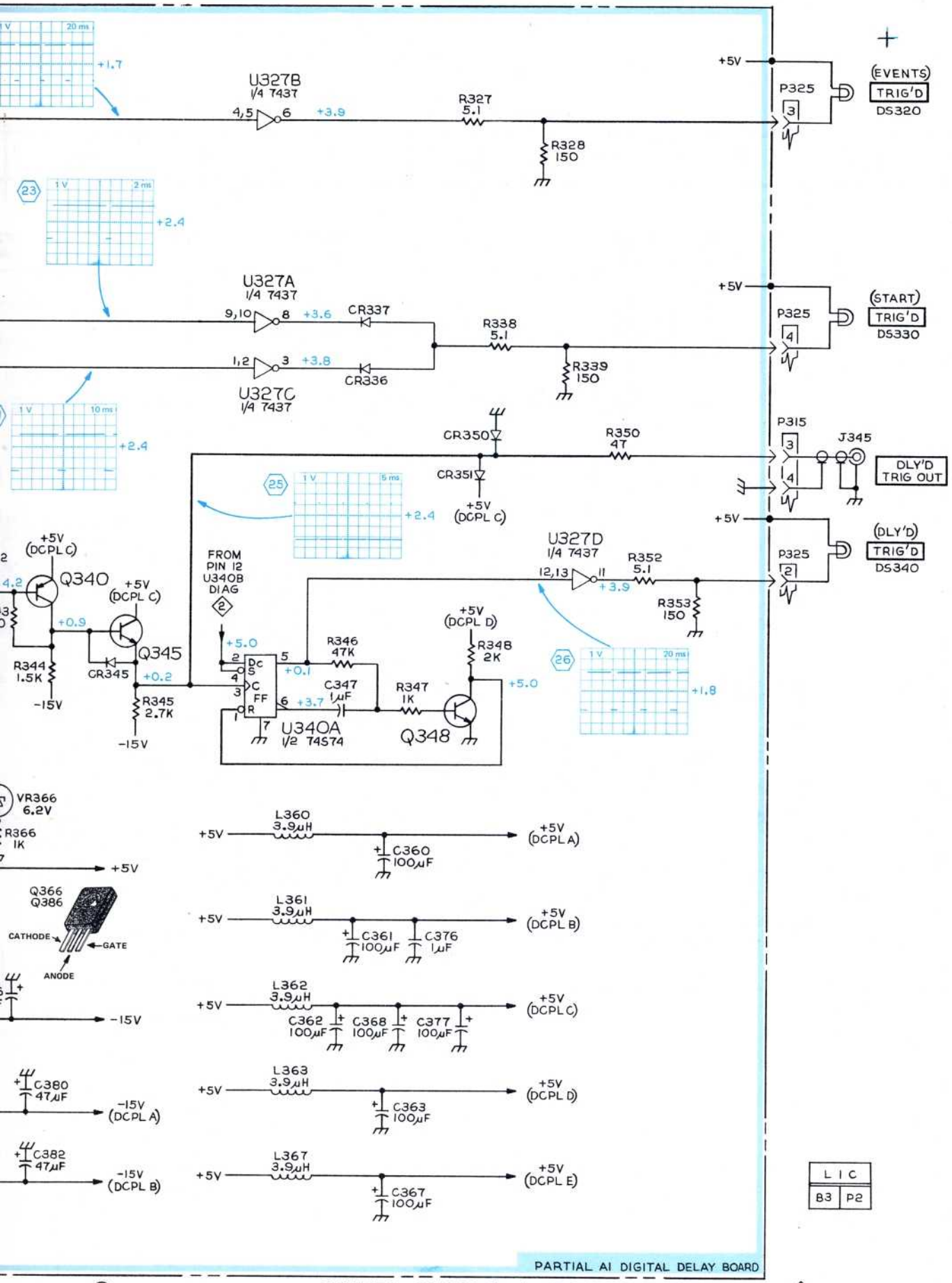

@ POWER SUPPLY & TRIGGER INDICATOR ③ PS 4-74

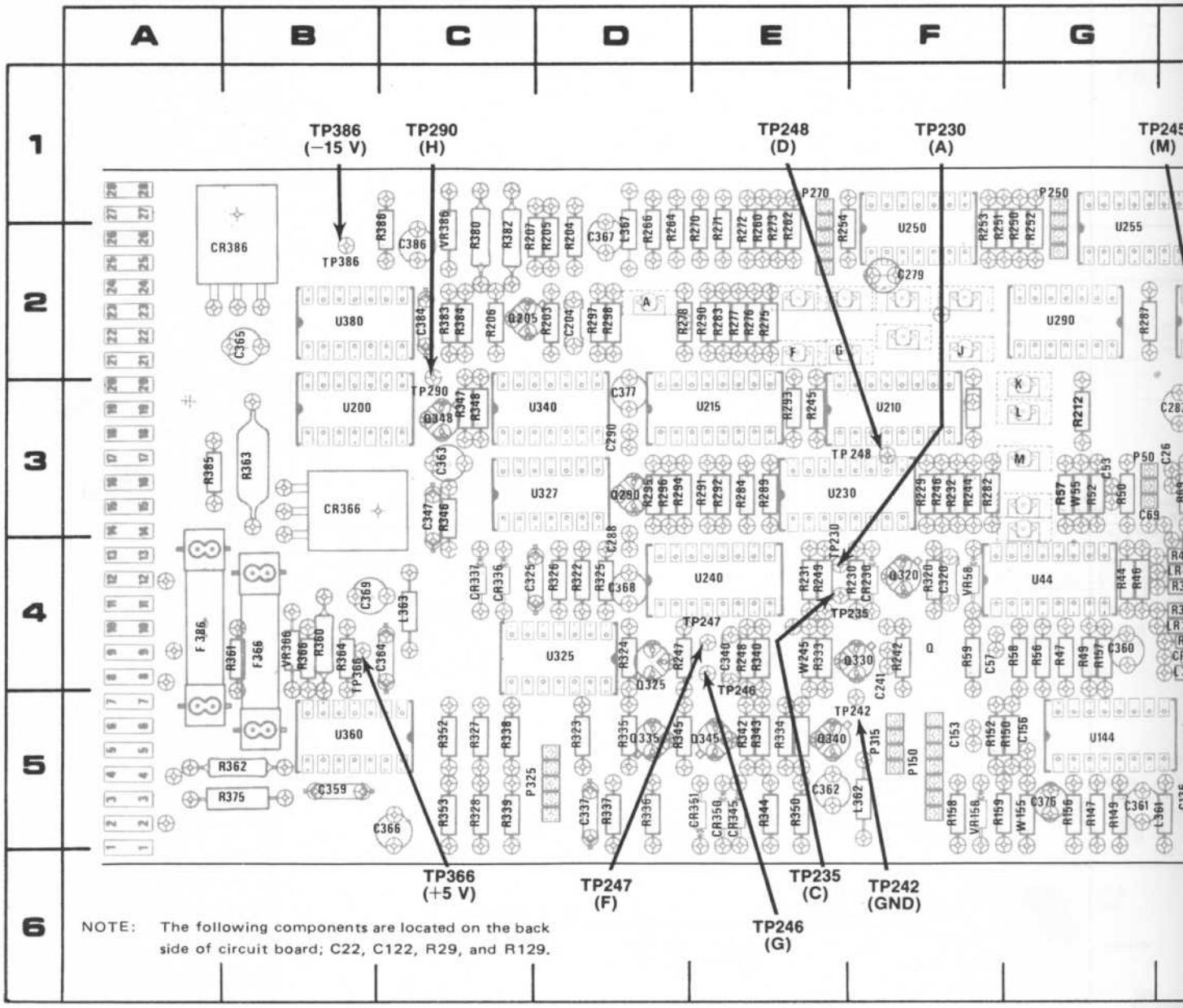

Fig. 7-4. A1-Digital Delay circuit board component locations, SN B020530 and up.

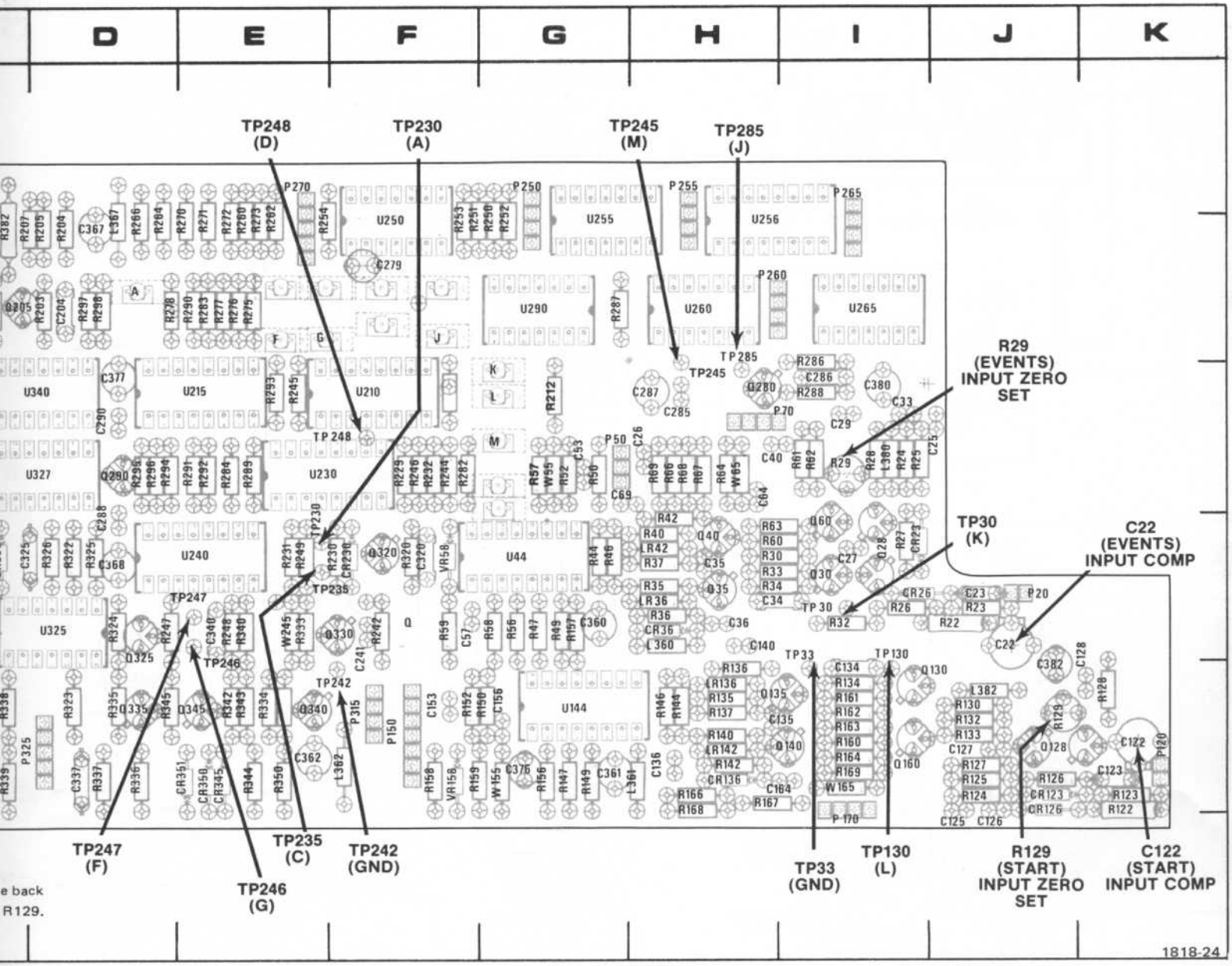

e back
R129.

Fig. 7-4. A1-Digital Delay circuit board component locations, SN B020530 and up.

CKT NO	GRID LOC	CKT NO	GRID LOC	CKT NO	GRID LOC	CKT NO	GRID LOC	CKT NO	GRID LOC	CKT NO	GRID LOC
C22	4J	CR23	4J	Q340	5F	R146	5H	R290	2E	TP248	3F
C23	4J	CR26	4J	Q345	5E	R147	5G	R291	3E	TP285	2H
C25	3J	CR36	4H	Q348	3C	R149	5G	R292	3E	TP290	3C
C26	3H	CR123	5J			R150	5G	R293	3E	TP366	4C
C27	4I	CR126	5J	R22	4J	R152	5G	R294	3E	TP386	2B
C29	3I	CR136	5H	R23	4J	R156	5G	R295	3D		
C33	3I	CR230	4F	R24	3I	R157	4G	R296	3D	U44	4G
C34	4I	CR282	2E	R25	3J	R158	5F	R297	2D	U144	5G
C35	4H	CR336	4C	R26	4I	R159	5G	R298	2D	U200	3B
C36	4H	CR337	4C	R27	4I	R160	5I	R320	4F	U210	3F
C40	3I	CR345	5E	R28	3I	R161	5I	R322	4D	U215	3E
C53	3G	CR350	5E	R29	3I	R162	5I	R323	5D	U230	3F
C57	4G	CR351	5E	R30	4I	R163	5I	R324	4D	U240	4E
C64	3I	CR366	3B	R32	4I	R164	5I	R325	4D	U250	2F
C69	3H	CR386	2B	R33	4I	R166	5H	R326	4D	U255	2G
C122	5K			R34	4I	R167	5I	R327	5C	U256	2I
C123	5K	F366	4B	R35	4H	R168	5H	R328	5C	U260	2H
C125	6J	F386	4B	R36	4H	R169	5I	R333	4E	U265	2I
C126	6J			R37	4H	R203	2D	R334	5E	U290	2G
C127	5J	L360	4H	R40	4H	R204	2D	R335	5D	U325	4D
C128	4K	L361	5H	R42	4H	R205	2D	R336	5D	U327	3D
C134	5I	L362	5F	R44	4G	R206	2C	R337	5D	U340	3D
C135	5I	L363	4C	R46	4G	R207	2D	R338	5C	U360	5B
C136	5H	L367	2D	R47	4G	R212	3G	R339	5C	U380	2B
C140	4I	L380	3I	R49	4G	R229	3F	R340	4E		
C153	5F	L382	5J	R50	3G	R230	4F	R342	5E	VR58	4F
C156	5G			R52	3G	R231	4E	R343	5E	VR158	5F
C164	5I	P20	4J	R56	4G	R232	3F	R344	5E	VR366	4B
C204	2D	P50	3H	R57	3G	R242	4F	R345	5E	VR386	2C
C241	4F	P70	3I	R58	4G	R245	3E	R346	3C		
C279	2F	P120	5K	R59	4F	R246	3F	R347	3C	W36	4H
C285	3H	P150	5F	R60	4I	R247	4E	R348	3C	W42	4H
C286	3I	P170	6I	R61	3I	R248	4E	R350	5E	W55	3G
C287	3H	P250	1G	R62	3I	R249	4E	R352	5C	W65	3H
C288	4D	P255	1H	R63	4I	R250	2G	R353	5C	W136	5H
C290	3D	P260	2I	R64	3H	R251	2G	R360	4B	W142	5H
C320	4F	P265	1I	R66	3H	R252	2G	R361	4B	W155	5G
C325	4D	P270	1E	R67	3H	R253	2F	R362	5B	W165	5I
C337	5D	P315	5F	R68	3H	R254	1F	R363	3B	W245	4E
C340	4E	P325	5D	R69	3H	R260	2E	R364	4B		
C347	3C			R122	5K	R262	2E	R366	4B		
C359	5B	Q28	4I	R123	5K	R264	2E	R375	5B		
C360	4G	Q30	4I	R124	5J	R266	2D	R380	2C		
C361	5G	Q35	4H	R125	5J	R270	2E	R382	2C		
C362	5E	Q40	4H	R126	5J	R271	2E	R383	2C		
C363	3C	Q60	4I	R127	5J	R272	2E	R384	2C		
C364	4C	Q128	5J	R128	5K	R273	2E	R385	3B		
C365	2B	Q130	5J	R129	5J	R275	2E	R386	2C		
C366	5C	Q135	5I	R130	5J	R276	2E				
C367	2D	Q140	5I	R132	5J	R277	2E	TP30	4I		
C368	4D	Q160	5I	R133	5J	R278	2E	TP33	4I		
C369	4C	Q205	2D	R134	5I	R280	3F	TP130	4I		
C376	5G	Q280	3I	R135	5H	R282	3E	TP230	4F		
C377	3D	Q290	3D	R136	5H	R283	2E	TP235	4F		
C380	3I	Q320	4F	R137	5H	R284	3E	TP242	5F		
C382	4J	Q325	4D	R140	5H	R286	2I	TP245	2H		
C384	2C	Q330	4F	R142	5H	R287	2H	TP246	4E		
C386	2C	Q335	5D	R144	5H	R289	3E	TP247	4E		

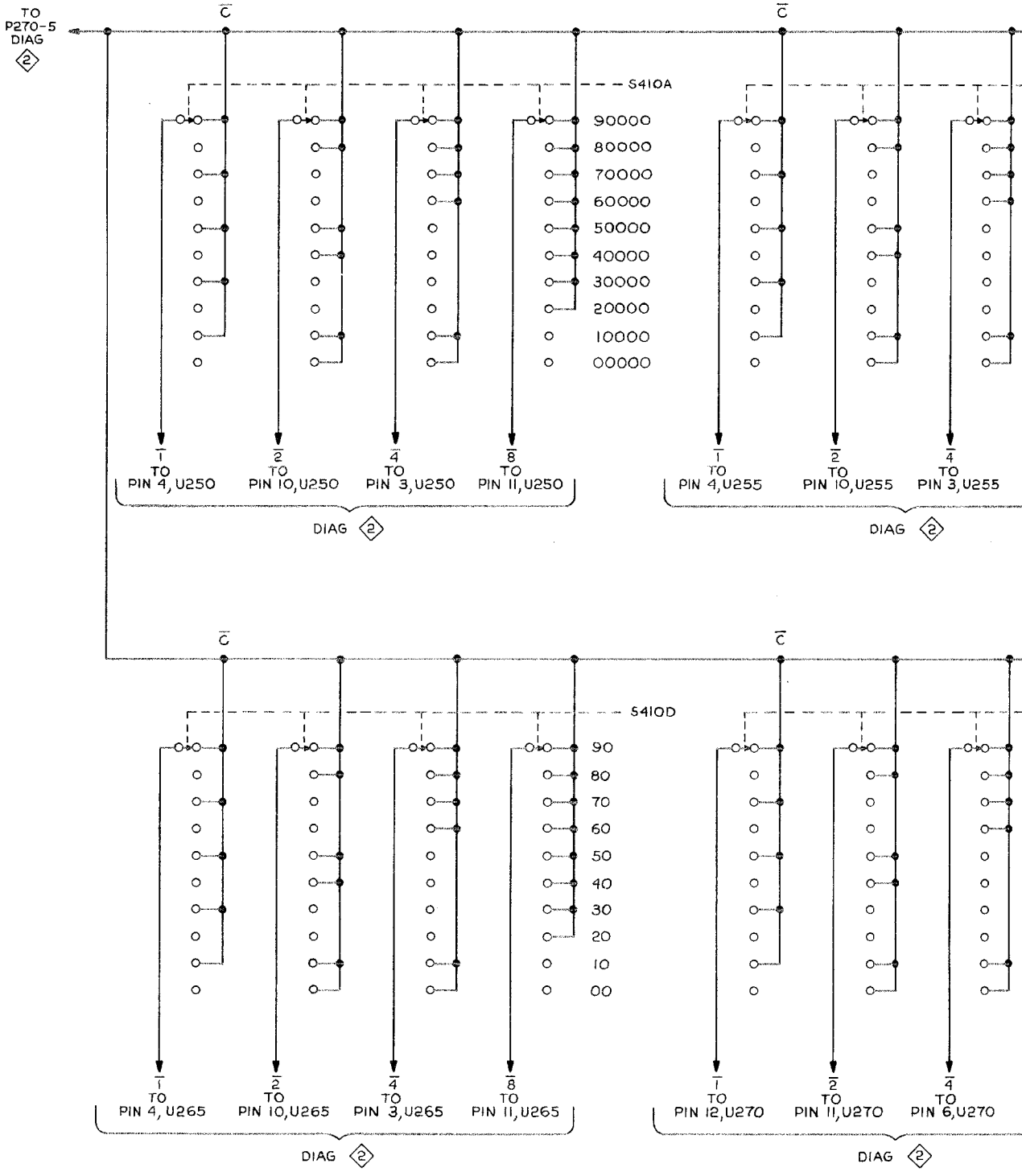
TO P270-5 DIAG 2
C̄
S410A
90000
80000
70000
60000
50000
40000
30000
20000
10000
00000
1̄ TO PIN 4, U250
2̄ TO PIN 10, U250
4̄ TO PIN 3, U250
8̄ TO PIN 11, U250
DIAG 2
1̄ TO PIN 4, U255
2̄ TO PIN 10, U255
4̄ TO PIN 3, U255
DIAG 2
S410D
90
80
70
60
50
40
30
20
10
00
1̄ TO PIN 4, U265
2̄ TO PIN 10, U265
4̄ TO PIN 3, U265
8̄ TO PIN 11, U265
DIAG 2
1̄ TO PIN 12, U270
2̄ TO PIN 11, U270
4̄ TO PIN 6, U270
DIAG 2

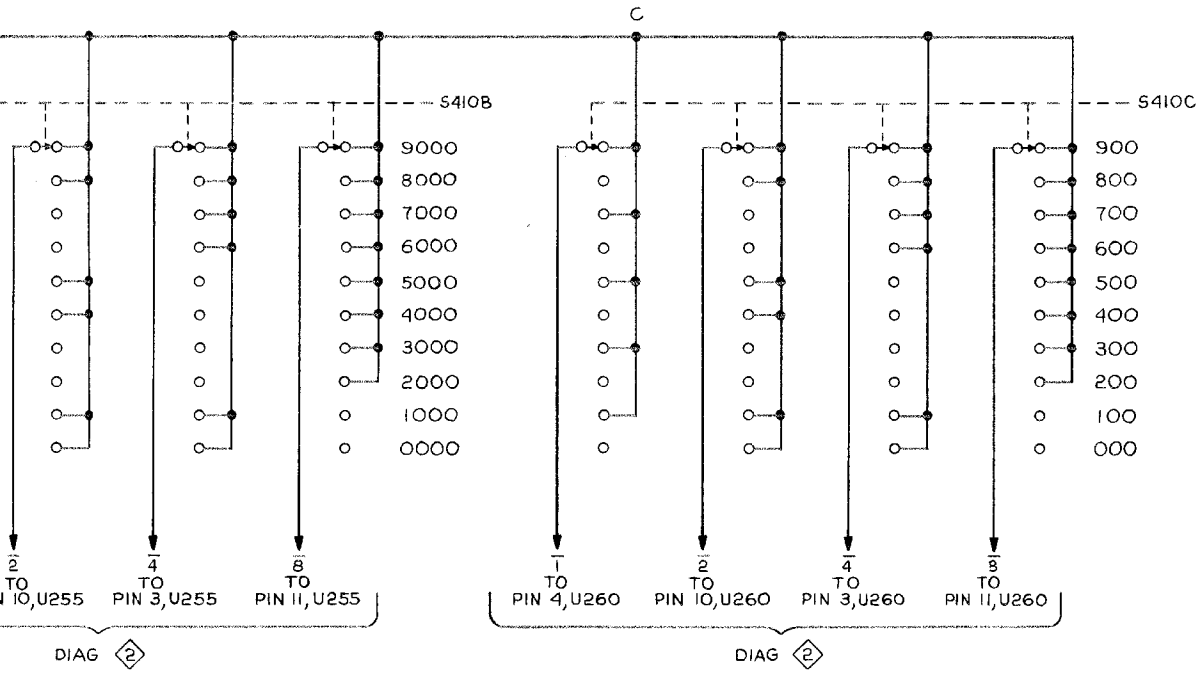

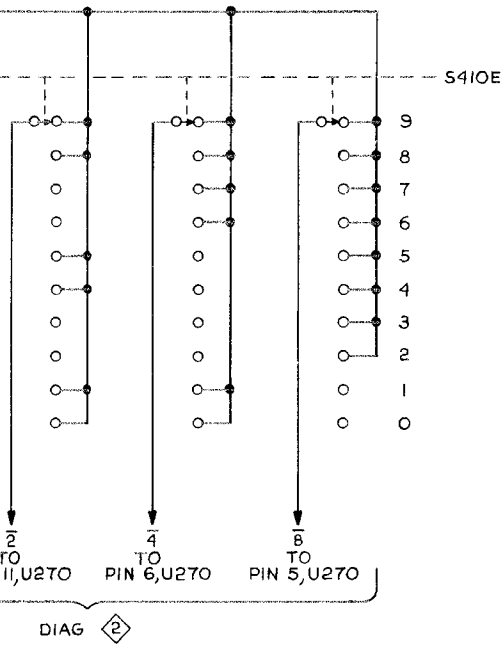

L I C
P2

@

SWITCHING CIRCUIT ◇4

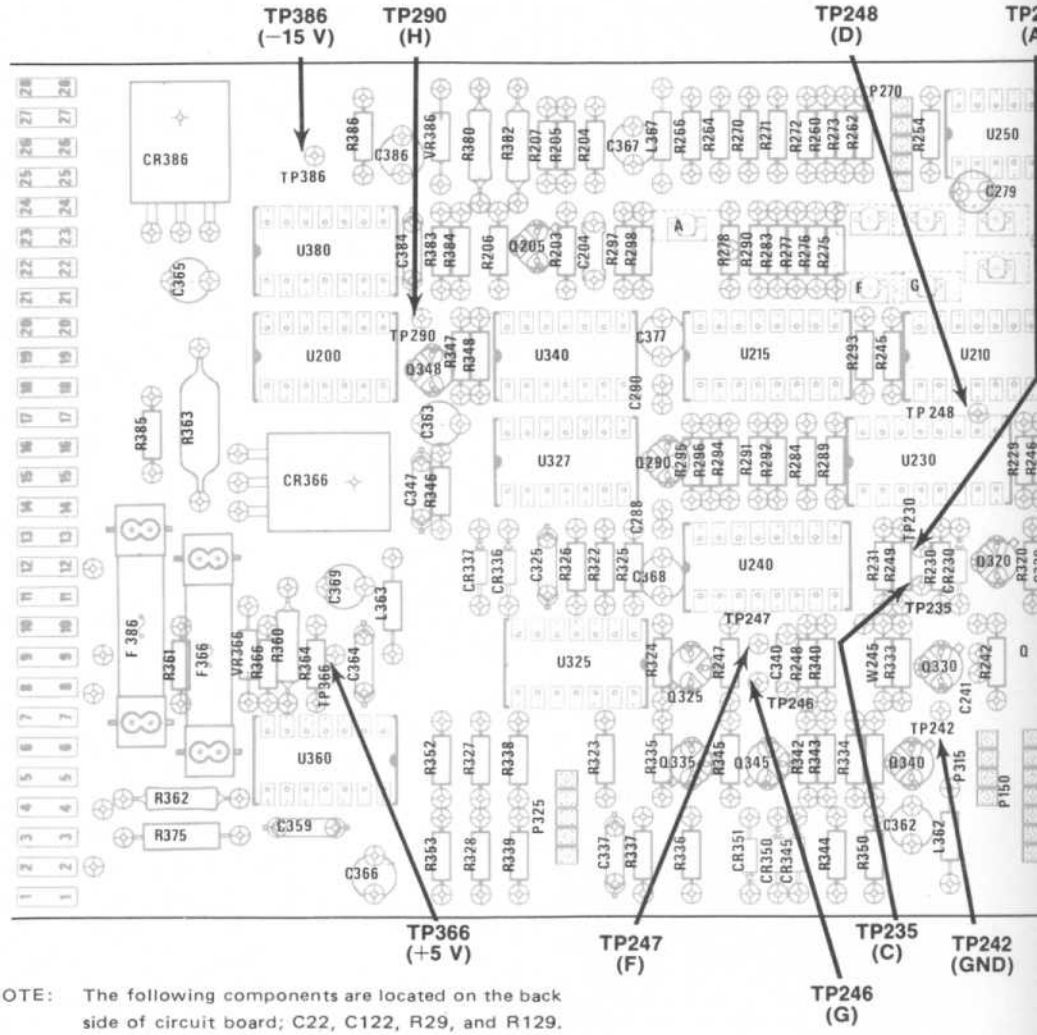

NOTE: The following components are located on the back side of circuit board; C22, C122, R29, and R129.

Fig. 7-6. Test point location

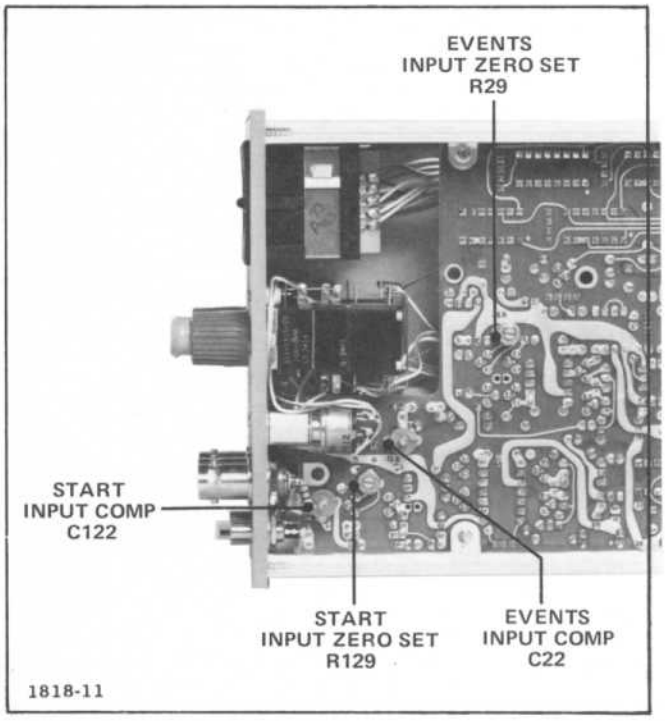

Fig. 7-5. Adjustment locations.

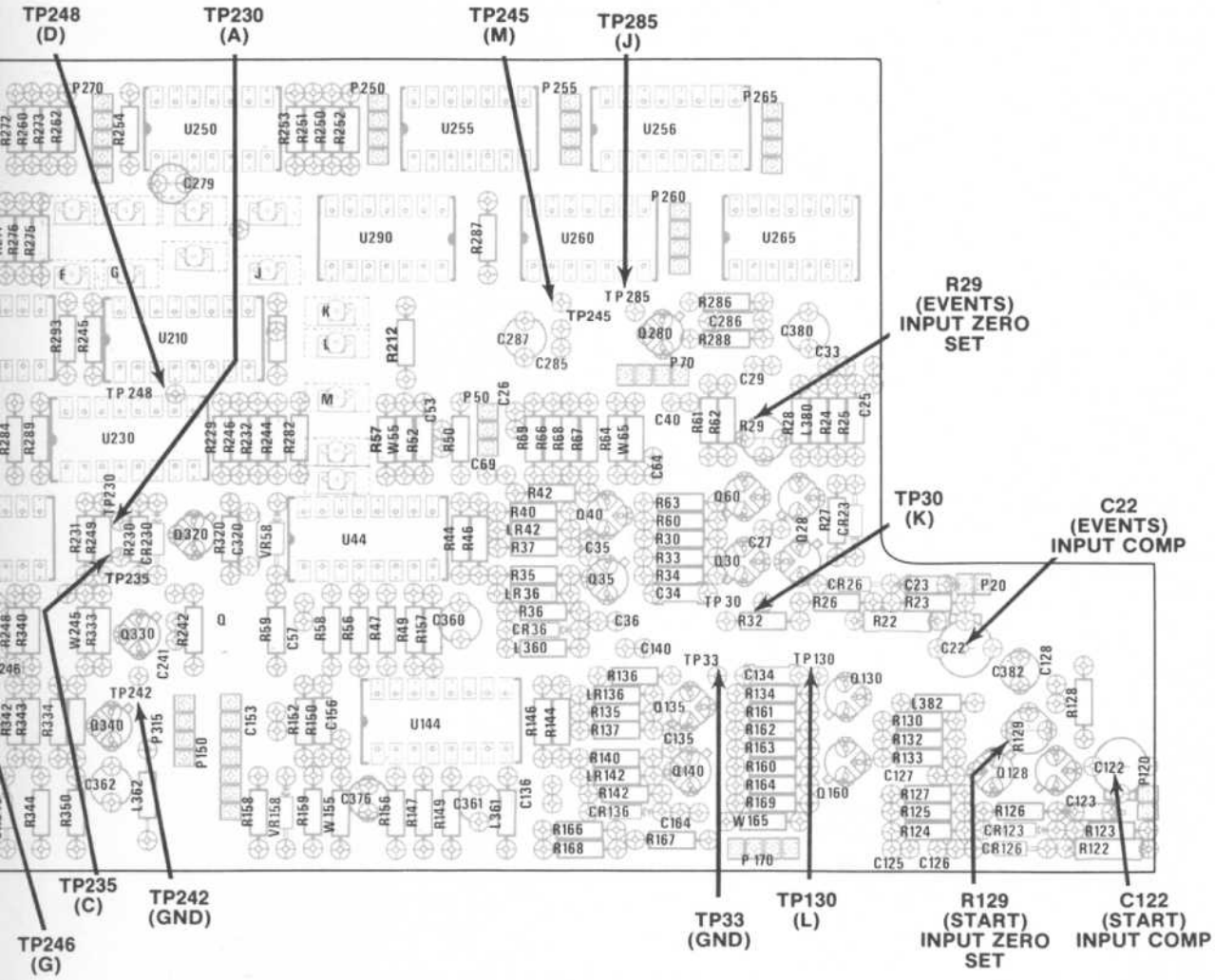

ig. 7-6. Test point locations, SN B020530 and up.

1818-26

REPLACEABLE MECHANICAL PARTS

PARTS ORDERING INFORMATION

Replacement parts are available from or through your local Tektronix, Inc. Field Office or representative.

Changes to Tektronix instruments are sometimes made to accommodate improved components as they become available, and to give you the benefit of the latest circuit improvements developed in our engineering department. It is therefore important, when ordering parts, to include the following information in your order: Part number, instrument type or number, serial number, and modification number if applicable.

If a part you have ordered has been replaced with a new or improved part, your local Tektronix, Inc. Field Office or representative will contact you concerning any change in part number.

Change information, if any, is located at the rear of this manual.

SPECIAL NOTES AND SYMBOLS

X000	Part first added at this serial number
00X	Part removed after this serial number

FIGURE AND INDEX NUMBERS

Items in this section are referenced by figure and index numbers to the illustrations.

INDENTATION SYSTEM

This mechanical parts list is indented to indicate item relationships. Following is an example of the indentation system used in the description column.

1 2 3 4 5 Name & Description

Assembly and/or Component
Attaching parts for Assembly and/or Component
\- - - * - - -
Detail Part of Assembly and/or Component
Attaching parts for Detail Part
\- - - * - - -
Parts of Detail Part
Attaching parts for Parts of Detail Part
\- - - * - - -

Attaching Parts always appear in the same indentation as the item it mounts, while the detail parts are indented to the right. Indented items are part of, and included with, the next higher indentation. The separation symbol - - - * - - - indicates the end of attaching parts.

Attaching parts must be purchased separately, unless otherwise specified.

ITEM NAME

In the Parts List, an Item Name is separated from the description by a colon (:). Because of space limitations, an Item Name may sometimes appear as incomplete. For further Item Name identification, the U.S. Federal Cataloging Handbook H6-1 can be utilized where possible.

ABBREVIATIONS

"	INCH
#	NUMBER SIZE
ACTR	ACTUATOR
ADPTR	ADAPTER
ALIGN	ALIGNMENT
AL	ALUMINUM
ASSEM	ASSEMBLED
ASSY	ASSEMBLY
ATTEN	ATTENUATOR
AWG	AMERICAN WIRE GAGE
BD	BOARD
BRKT	BRACKET
BRS	BRASS
BRZ	BRONZE
BSHG	BUSHING
CAB	CABINET
CAP	CAPACITOR
CER	CERAMIC
CHAS	CHASSIS
CKT	CIRCUIT
COMP	COMPOSITION
CONN	CONNECTOR
COV	COVER
CPLG	COUPLING
CRT	CATHODE RAY TUBE
DEG	DEGREE
DWR	DRAWER
ELCTRN	ELECTRON
ELEC	ELECTRICAL
ELCTLT	ELECTROLYTIC
ELEM	ELEMENT
EPL	ELECTRICAL PARTS LIST
EQPT	EQUIPMENT
EXT	EXTERNAL
FIL	FILLISTER HEAD
FLEX	FLEXIBLE
FLH	FLAT HEAD
FLTR	FILTER
FR	FRAME or FRONT
FSTNR	FASTENER
FT	FOOT
FXD	FIXED
GSKT	GASKET
HDL	HANDLE
HEX	HEXAGON
HEX HD	HEXAGONAL HEAD
HEX SOC	HEXAGONAL SOCKET
HLCPS	HELICAL COMPRESSION
HLEXT	HELICAL EXTENSION
HV	HIGH VOLTAGE
IC	INTEGRATED CIRCUIT
ID	INSIDE DIAMETER
IDENT	IDENTIFICATION
IMPLR	IMPELLER
IN	INCH
INCAND	INCANDESCENT
INSUL	INSULATOR
INTL	INTERNAL
LPHLDR	LAMPHOLDER
MACH	MACHINE
MECH	MECHANICAL
MTG	MOUNTING
NIP	NIPPLE
NON WIRE	NOT WIRE WOUND
OBD	ORDER BY DESCRIPTION
OD	OUTSIDE DIAMETER
OVH	OVAL HEAD
PH BRZ	PHOSPHOR BRONZE
PL	PLAIN or PLATE
PLSTC	PLASTIC
PN	PART NUMBER
PNH	PAN HEAD
PWR	POWER
RCPT	RECEPTACLE
RES	RESISTOR
RGD	RIGID
RLF	RELIEF
RTNR	RETAINER
SCH	SOCKET HEAD
SCOPE	OSCILLOSCOPE
SCR	SCREW
SE	SINGLE END
SECT	SECTION
SEMICOND	SEMICONDUCTOR
SHLD	SHIELD
SHLDR	SHOULDERED
SKT	SOCKET
SL	SLIDE
SLFLKG	SELF-LOCKING
SLVG	SLEEVING
SPR	SPRING
SQ	SQUARE
SST	STAINLESS STEEL
STL	STEEL
SW	SWITCH
T	TUBE
TERM	TERMINAL
THD	THREAD
THK	THICK
TNSN	TENSION
TPG	TAPPING
TRH	TRUSS HEAD
V	VOLTAGE
VAR	VARIABLE
W/	WITH
WSHR	WASHER
XFMR	TRANSFORMER
XSTR	TRANSISTOR

CROSS INDEX MFR. CODE NUMBER TO MANUFACTURER

MFR.CODE	MANUFACTURER	ADDRESS	CITY,STATE,ZIP
0000C	GETTIG ENGINEERING AND MANUFACTURING CO.		SPRINGMILL, PA 16875
01295	TEXAS INSTRUMENTS, INC., SEMICONDUCTOR GROUP	P. O. BOX 5012	DALLAS, TX 75222
07126	DIGITRAN CO., THE	855 SOUTH ARROYO PARKWAY	PASADENA, CA 91105
08261	SPECTRA-STRIP CORP.	7100 LAMPSON AVE.	GARDEN GROVE, CA 92642
09133	KIERULFF ELECTRONICS, INC.	2585 COMMERCE WAY	LOS ANGELES, CA 90015
22526	BERG ELECTRONICS, INC.	YOUK EXPRESSWAY	NEW CUMBERLAND, PA 17070
23499	GAVITT WIRE AND CABLE, DIVISION OF RSC INDUSTRIES, INC.	455 N. QUINCE ST.	ESCONDIDO, CA 92025
24931	SPECIALTY CONNECTOR CO., INC.	3560 MADISON AVE.	INDIANAPOLIS, IN 46227
45722	USM CORP., PARKER-KALON FASTENER DIV.	1 PEEKAY DRIVE	CLIFTON, NJ 07014
71159	BRISTOL SOCKET SCREW, DIV. OF AMERICAN CHAIN AND CABLE CO., INC.	40 BRISTOL ST.	WATERBURY, CT 06720
71279	CAMBRIDGE THERMIONIC CORP.	445 CONCORD AVE.	CAMBRIDGE, MA 02138
73743	FISCHER SPECIAL MFG. CO.	446 MORGAN ST.	CINCINNATI, OH 45206
74445	HOLO-KROME CO.	31 BROOK ST. WEST	HARTFORD, CT 06110
78189	ILLINOIS TOOL WORKS, INC. SHAKEPROOF DIVISION	ST. CHARLES ROAD	ELGIN, IL 60120
80009	TEKTRONIX, INC.	P. O. BOX 500	BEAVERTON, OR 97077
81073	GRAYHILL, INC.	561 HILLGROVE AVE.	LA GRANGE, IL 60525
83385	CENTRAL SCREW CO.	2530 CRESCENT DR.	BROADVIEW, IL 60153

Fig. & Index No.	Tektronix Part No.	Serial/Model No. Eff	Dscont	Qty	1 2 3 4 5 Name & Description	Mfr Code	Mfr Part Number
1-1	337-1399-00	B010100	B019999	2	SHLD,ELECTRICAL:SIDE	80009	337-1399-00
	337-1399-04	B020000		2	SHIELD,ELEC:SIDE	80009	337-1399-04
-2	366-1576-00			2	KNOB:GRAY	80009	366-1576-00
	213-0246-00			1	. SETSCREW:5-40 X 0.093 INCH L,HEX SOC	71159	OBD
-3	366-1280-00			2	KNOB:GRAY	80009	366-1278-00
	213-0153-00			1	. SETSCREW:5-40 X 0.125 INCH,HEX SOC STL	74445	OBD
-4	366-1422-01			1	KNOB:LATCH	80009	366-1422-01
					(ATTACHING PARTS)		
-5	214-1840-00			1	PIN,KNOB SECRG:0.094 OD X 0.120 INCH LONG	80009	214-1840-00
					- - - * - - -		
-6	260-1650-00			1	SWITCH,ROTARY:THUMWHEEL	07126	23-T-1
-7	131-0955-00			3	CONNECTOR,RCPT,:BNC,FEMALE,W/HARDWARE	05091	31-279
-8	210-0255-00			3	TERMINAL,LUG:0.391" ID INT TOOTH	80009	210-0255-00
-9	358-0301-00			2	BUSHING,SLEEVE:FOR 0.185 DIA HOLE,GRAY	80009	358-0301-00
-10	----- -----			2	RES.,VAR:(SEE R70/S70 AND R170/S170 EPL)		
					(ATTACHING PARTS FOR EACH)		
-11	210-0583-00			1	NUT,PLAIN,HEX.:0.25-32 X 0.312 INCH,BRS	73743	2X20224-402
					- - - * - - -		
-12	333-1832-00			1	PANEL,FRONT:	80009	333-1832-00
-13	200-0935-00			4	BASE,LAMPHOLDER:0.29 OD X 0.19 CASE	80009	200-0935-00
-14	378-0602-01			3	LENS,LIGHT:AMBER	80009	378-0602-01
-15	378-0602-00			1	LENS,LIGHT:GREEN	80009	378-0602-00
-16	352-0157-00			4	LAMPHOLDER:WHITE PLASTIC	80009	352-0157-00
-17	136-0387-00			2	JACK,TIP:GRAY	71279	450-4352-01-0318
-18	386-2826-00			1	SUBPANEL,FRONT:PLASTIC	80009	386-2826-00
	386-2826-01			1	SUBPANEL,FRONT:PLASTIC W/JACK TIPS	80009	386-2826-01
					(ATTACHING PARTS)		
-19	213-0229-00			4	SCR,TPG,THD FOR:6-20 X0.375"100 DEG,FLH STL	83385	OBD
					- - - * - - -		
-20	214-1513-01			1	LCH,PLUG-IN RET:	80009	214-1513-01
					(ATTACHING PARTS)		
-21	213-0254-00			1	SCR,TPG,THD CTG:2-56X0.25"100 DEG,FLH STL	45722	OBD
					- - - * - - -		
-22	----- -----			2	RES.,VAR:(SEE R75 AND R175 EPL)		
					(ATTACHING PARTS FOR EACH)		
-23	358-0409-00			1	BSHG,MACH.THD:0.25-32 X 0.159 ID X 0.24	80009	358-0409-00
-24	220-0510-00			1	NUT,PLAIN,HEX.:0.25-32 X 0.312 INCH	80009	220-0510-00
-25	210-0046-00			2	WASHER,LOCK:INTL,0.26 ID X 0.40" OD,STL	78189	1214-05-00-0541C
					- - - * - - -		
-26	131-0258-00			2	CONNECTOR,RCPT,:JACK ASSEMBLY	80009	131-0258-00
-27	260-0735-00			1	SWITCH,PUSH:SPST	81073	39-1
-28	337-1992-00			1	SHLD,ELECTRICAL:	80009	337-1992-00
-29	----- -----	XB010000		1	CKT BOARD ASSY:COUNTER SIDE(SEE A2 EPL)		
					(ATTACHING PARTS)		
-30	211-0008-00	XB020000		2	SCREW,MACHINE:4-40 X 0.25 INCH,PNH STL	83385	OBD
					- - - * - - -		
	----- -----			-	. CKT BOARD ASSY INCLUDES:		
-31	136-0252-04	XB020000		5	. SOCKET,PIN TERM:0.188 INCH LON	22526	75060
-32	136-0260-02	XB020000		5	. SOCKET,PLUG-IN:16 CONTACT,LOW CLEARANCE	01295	C931602
-33	131-0590-00	XB020000		16	. CONTACT,ELEC:0.71 INCH LONG	22526	47351
-34	386-1657-00	XB020000		1	. SUPPORT,CKT BD:	80009	386-1657-00
-35	129-0418-00	XB020000		2	SPACER,POST:HEX.,4-40 X 0.312" L,W/HDWR	09133	D20418-2
-36	----- -----			1	CKT BOARD ASSY:MAIN(SEE A1 EPL		
					(ATTACHING PARTS)		
-37	213-0146-00			4	SCR,TPG,THD FOR:6-20 X 0.313 INCH,PNH STL	83385	OBD
					- - - * - - -		
-38	136-0269-02	B010100	B019999	11	. SOCKET,PLUG-IN:14 CONTACT,LOW CLEARANCE	01295	C931402
	136-0269-02	B020000		9	. SOCKET,PLUG-IN:14 CONTACT,LOW CLEARANCE	01295	C931402
-39	136-0260-02			8	. SOCKET,PLUG-IN:16 CONTACT,LOW CLEARANCE	01295	C931602
-40	131-0566-00	B010100	B021179	9	. LINK,TERM.CONNE:0.086 DIA X 2.375 INCH L	0000L	ERD-18T0
	131-0566-00	B021180		8	. LINK,TERM.CONNE:0.086 DIA X 2.375 INCH L	0000L	ERD-18T0
-41	214-0579-00			15	. TERM.,TEST PT:0.40 INCH LONG	80009	214-0579-00
-42	344-0154-00			4	. CLIP,ELECTRICAL:FOR 0.25 INCH DIA FUSE	80009	344-0154-00
-43	136-0252-04			69	. SOCKET,PIN TERM:0.188 INCH LON	22526	75060

Fig. & Index No.	Tektronix Part No.	Serial/Model No. Eff	Dscont	Qty	1 2 3 4 5 Name & Description	Mfr Code	Mfr Part Number
1-44	136-0263-04	XB020000		16	. SOCKET,PIN TERM:FOR 0.025 INCH SQUARE PIN	22526	75377-001
-45	131-0608-00	B010100	B021179	52	. CONTACT,ELEC:0.365 INCH LONG	22526	47357
	131-0608-00	B021180		55	. CONTACT,ELEC:0.365 INCH LONG	22526	47357
-46	214-1061-00			1	SPRING,GROUND:FLAT	80009	214-1061-00
-47	426-0725-00			1	FR SECT,PLUG-IN:TOP	80009	426-0725-00
-48	426-0724-00			1	FR SECT,PLUG-IN:BOTTOM	80009	426-0724-00
-49	352-0171-00			1	CONN BODY,PL,EL:1 WIRE BLACK	80009	352-0171-00
-50	352-0169-00			1	CONN BODY,PL,EL:2 WIRE BLACK	80009	352-0169-00
-51	352-0161-00			1	CONN BODY,PL,EL:3 WIRE BLACK	80009	352-0161-00
-52	352-0162-00			1	CONN BODY,PL,EL:4 WIRE BLACK	80009	352-0162-00
	352-0162-01			1	CONN BODY.PL,EL:4 WIRE BROWN	80009	352-0162-01
	352-0162-02			1	CONN BODY,PL,EL:4 WIRE RED	80009	352-0162-02
	352-0162-03			1	CONN BODY,PL,EL:4 WIRE ORANGE	80009	352-0162-03
	352-0162-04			1	CONN BODY,PL,EL:4 WIRE YELLOW	80009	352-0162-04
	352-0162-05			1	CONN BODY,PL,EL:4 WIRE GREEN	80009	352-0162-05
-53	352-0163-00			1	CONN BODY,PL,EL:5 WIRE BLACK	80009	352-0163-00
	352-0163-05			1	CONN BODY,PL,EL:5 WIRE GREEN	80009	352-0163-05
-54	352-0165-00			1	CONN BODY,PL,EL:7 WIRE BLACK	80009	352-0165-00
-55	175-0826-00			FT	WIRE,ELECTRICAL:3 WIRE RIBBON	80009	175-0826-00
-56	175-0827-00			FT	WIRE,ELECTRICAL:4 WIRE RIBBON	08261	TEK-175-0827-00
-57	175-0828-00			FT	WIRE,ELECTRICAL:5 WIRE RIBBON	23499	TEK-175-0828-00
-58	131-0707-00			46	CONTACT,ELEC:0.48"L,22-26 AWG WIRE	22526	47439
-59	131-0708-00			5	CONTACT,ELEC:0.48"L,28-32 AWG WIRE	22526	47437
					ACCESSORIES		
	070-1818-01			1	MANUAL,TECH:INSTRUCTION (NOT SHOWN)	80009	070-1818-01

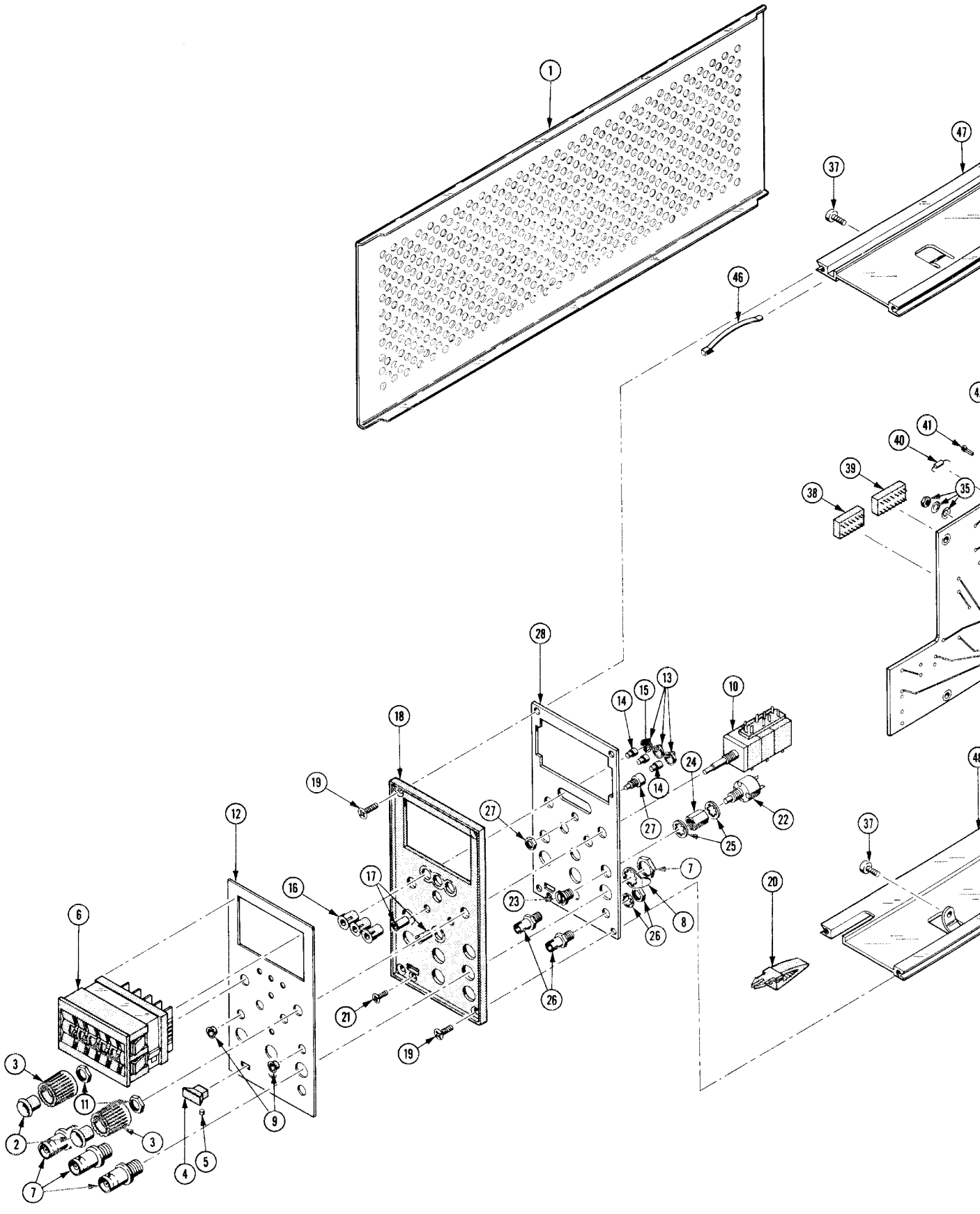

REV. B, OCT. 1975

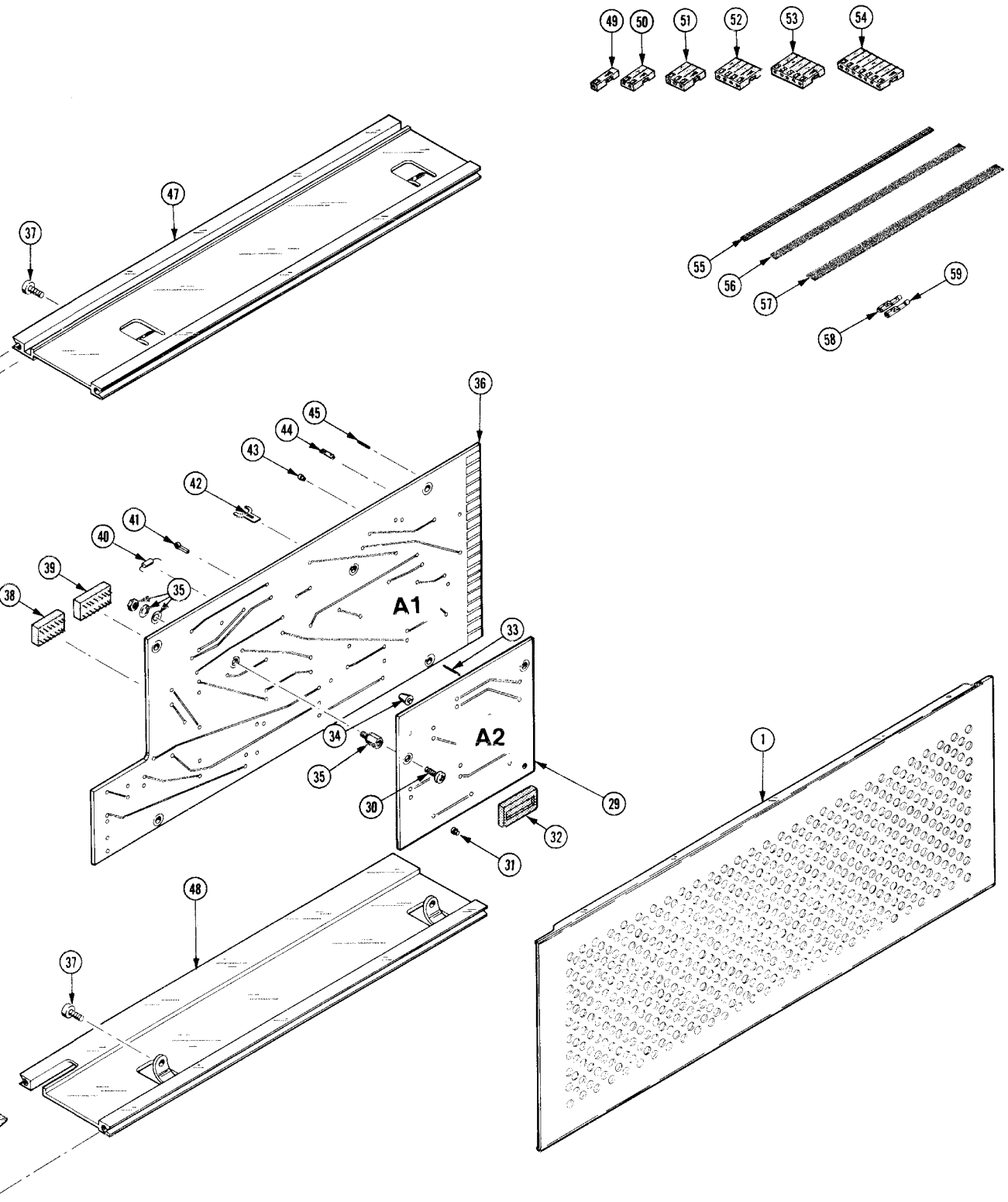

FIG. 1 EXPLODED

MANUAL CHANGE INFORMATION

At Tektronix, we continually strive to keep up with latest electronic developments by adding circuit and component improvements to our instruments as soon as they are developed and tested.

Sometimes, due to printing and shipping requirements, we can't get these changes immediately into printed manuals. Hence, your manual may contain new change information on following pages.

A single change may affect several sections. Since the change information sheets are carried in the manual until all changes are permanently entered, some duplication may occur. If no such change pages appear following this page, your manual is correct as printed.

SERVICE NOTE

Because of the universal parts procurement problem, some electrical parts in your instrument may be different from those described in the Replaceable Electrical Parts List. The parts used will in no way alter or compromise the performance or reliability of this instrument. They are installed when necessary to ensure prompt delivery to the customer. Order replacement parts from the Replaceable Electrical Parts List.

CALIBRATION TEST EQUIPMENT REPLACEMENT

Calibration Test Equipment Chart

This chart compares TM 500 product performance to that of older Tektronix equipment. Only those characteristics where significant specification differences occur, are listed. In some cases the new instrument may not be a total functional replacement. Additional support instrumentation may be needed or a change in calibration procedure may be necessary.

Comparison of Main Characteristics

DM 501 replaces 7D13		
PG 501 replaces 107	PG 501 - Risetime less than 3.5 ns into 50 Ω.	107 - Risetime less than 3.0 ns into 50 Ω.
108	PG 501 - 5 V output pulse; 3.5 ns Risetime.	108 - 10 V output pulse; 1 ns Risetime.
111	PG 501 - Risetime less than 3.5 ns; 8 ns Pretrigger pulse delay.	111 - Risetime 0.5 ns; 30 to 250 ns Pretrigger Pulse delay.
114	PG 501 - ±5 V output.	114 - ±10 V output. Short proof output.
115	PG 501 - Does not have Paired, Burst, Gated, or Delayed pulse mode; ±5 V dc Offset. Has ±5 V output.	115 - Paired, Burst, Gated, and Delayed pulse mode; ±10 V output. Short-proof output.
PG 502 replaces 107		
108	PG 502 - 5 V output	108 - 10 V output.
111	PG 502 - Risetime less than 1 ns; 10 ns Pretrigger pulse delay.	111 - Risetime 0.5 ns; 30 to 250 ns Pretrigger pulse delay.
114	PG 502 - ±5 V output	114 - ±10 V output. Short proof output.
115	PG 502 - Does not have Paired, Burst, Gated, Delayed & Undelayed pulse mode; Has ±5 V output.	115 - Paired, Burst, Gated, Delayed & Undelayed pulse mode; ±10 V output. Short-proof output.
2101	PG 502 - Does not have Paired or Delayed pulse. Has ±5 V output.	2101 - Paired and Delayed pulse; 10 V output.
PG 506 replaces 106	PG 506 - Positive-going trigger output signal at least 1 V; High Amplitude output, 60 V.	106 - Positive and Negative-going trigger output signal, 50 ns and 1 V; High Amplitude output, 100 V.
067-0502-01	PG 506 - Does not have chopped feature.	0502-01 - Comparator output can be alternately chopped to a reference voltage.
SG 503 replaces 190, 190A, 190B	SG 503 - Amplitude range 5 mV to 5.5 V p-p.	190B - Amplitude range 40 mV to 10 V p-p.
191	SG 503 - Frequency range 250 kHz to 250 MHz.	191 - Frequency range 350 kHz to 100 MHz.
067-0532-01	SG 503 - Frequency range 250 kHz to 250 MHz.	0532-01 - Frequency range 65 MHz to 500 MHz.
TG 501 replaces 180, 180A	TG 501 - Marker outputs, 5 sec to 1 ns. Sinewave available at 5, 2, and 1 ns. Trigger output - slaved to marker output from 5 sec through 100 ns. One time-mark can be generated at a time.	180A - Marker outputs, 5 sec to 1 μs. Sinewave available at 20, 10, and 2 ns. Trigger pulses 1, 10, 100 Hz; 1, 10, and 100 kHz. Multiple time-marks can be generated simultaneously.
181	TG 501 - Marker outputs, 5 sec to 1 ns. Sinewave available at 5, 2, and 1 ns.	181 - Marker outputs, 1, 10, 100, 1000, and 10,000 μs, plus 10 ns sinewave.
184	TG 501 - Marker outputs, 5 sec to 1 ns. Sinewave available at 5, 2, and 1 ns. Trigger output - slaved to marker output from 5 sec through 100 ns. One time-mark can be generated at a time.	184 - Marker outputs, 5 sec to 2 ns. Sinewave available at 50, 20, 10, 5, and 2 ns. Separate trigger pulses of 1 and .1 sec; 10, 1, and .1 ms; 10 and 1 μs. Marker amplifier provides positive or negative time marks of 25 V min. Marker intervals of 1 and .1 sec; 10, 1, and .1 ms; 10 and 1 μs.
2901	TG 501 - Marker outputs, 5 sec to 1 ns. Sinewave available at 5, 2, and 1 ns. Trigger output - slaved to marker output from 5 sec through 100 ns. One time-mark can be generated at a time.	2901 - Marker outputs, 5 sec to 0.1 μs. Sinewave available to 50, 10, and 5 ns. Separate trigger pulses, from 5 sec to 0.1 μs. Multiple time-marks can be generated simultaneously.

NOTE: All TM 500 generator outputs are short-proof. All TM 500 plug-in instruments require TM 500-Series Power Module.

TEKTRONIX®
committed to technical excellence

MANUAL CHANGE INFORMATION

PRODUCT DD501
070-1818-01

CHANGE REFERENCE M31489
DATE 3-25-77

CHANGE:	DESCRIPTION

EFF SN B021251

ELECTRICAL PARTS LIST AND SCHEMATIC CHANGES

CHANGE TO:

A2	670-4316-02	CKT BOARD ASSY:COUNTER SIDE

ADD:

C253	281-0519-00	CAP.,FXD,CER DI:47PF,500V
R228	315-0131-00	RES.,FXD,CMPSN:130 OHM,5%,0.25W
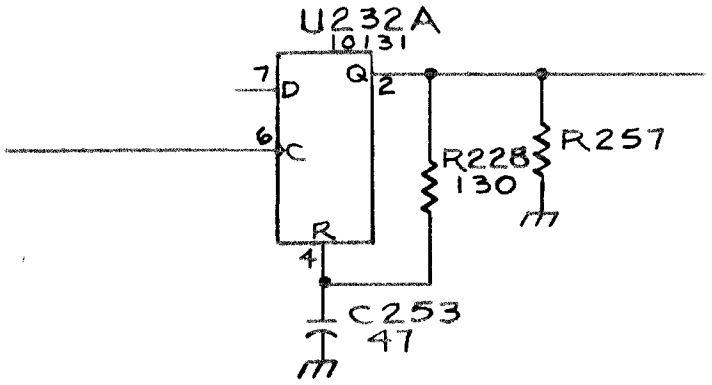
DIAGRAM <2> COUNTER CIRCUIT - Partial