INSTRUCTION MANUAL

Serial Number 170

TYPE 3S3 SAMPLING-PROBE UNIT

Tektronix, Inc.

S.W. Millikan Way ● P. O. Box 500 ● Beaverton, Oregon ● Phone MI 4-0161 ● Cables: Tektronix

Tektronix International A.G.

Terrassenweg 1A ● Zug, Switzerland ● PH. 042-49192 ● Cable: Tekintag, Zug Switzerland ● Telex 53.574

070-374

963

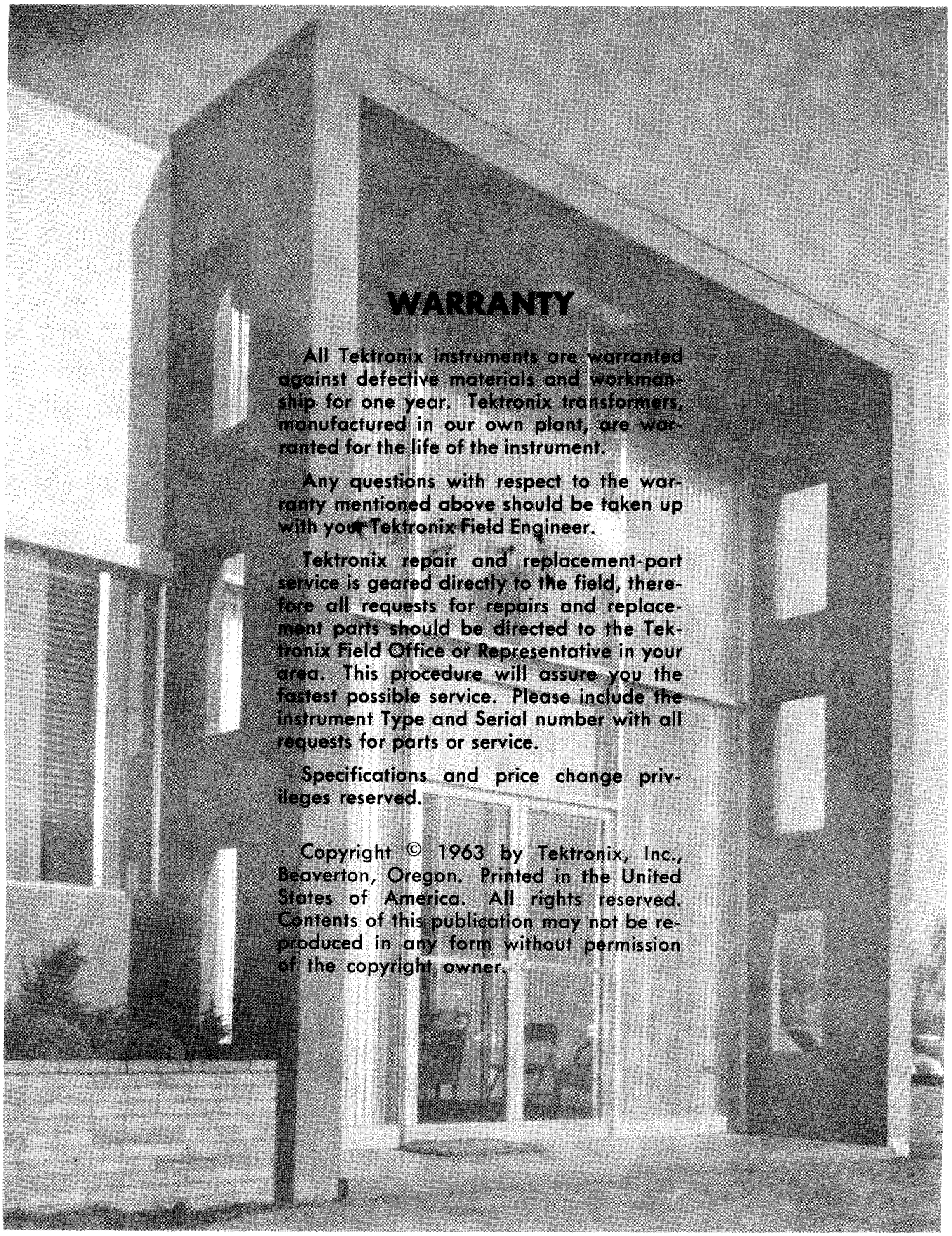

WARRANTY

All Tektronix instruments are warranted against defective materials and workmanship for one year. Tektronix transformers, manufactured in our own plant, are warranted for the life of the instrument.

Any questions with respect to the warranty mentioned above should be taken up with your Tektronix Field Engineer.

Tektronix repair and replacement-part service is geared directly to the field, therefore all requests for repairs and replacement parts should be directed to the Tektronix Field Office or Representative in your area. This procedure will assure you the fastest possible service. Please include the instrument Type and Serial number with all requests for parts or service.

Specifications and price change privileges reserved.

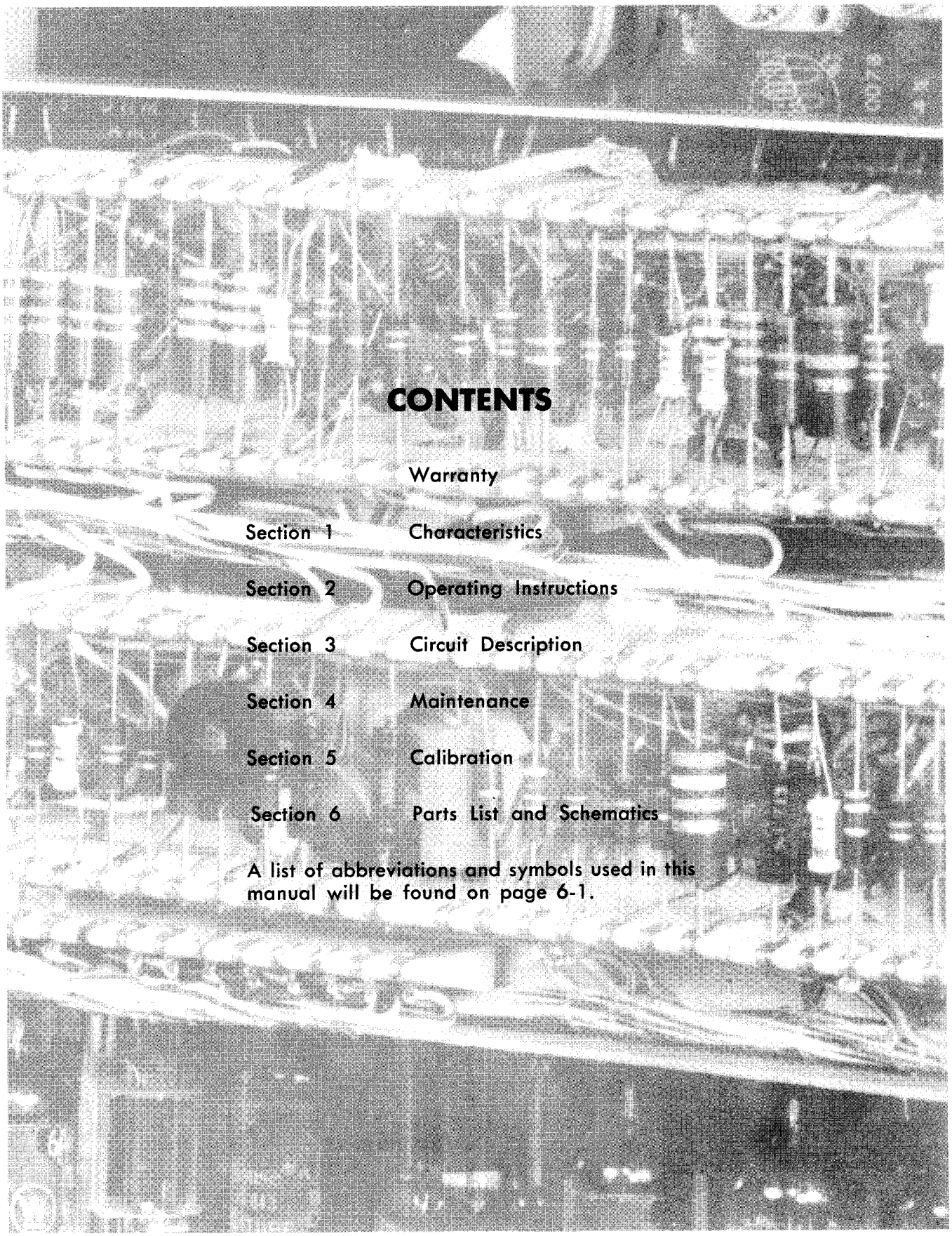

CONTENTS

A list of abbreviations and symbols used in this manual will be found on page 6-1.

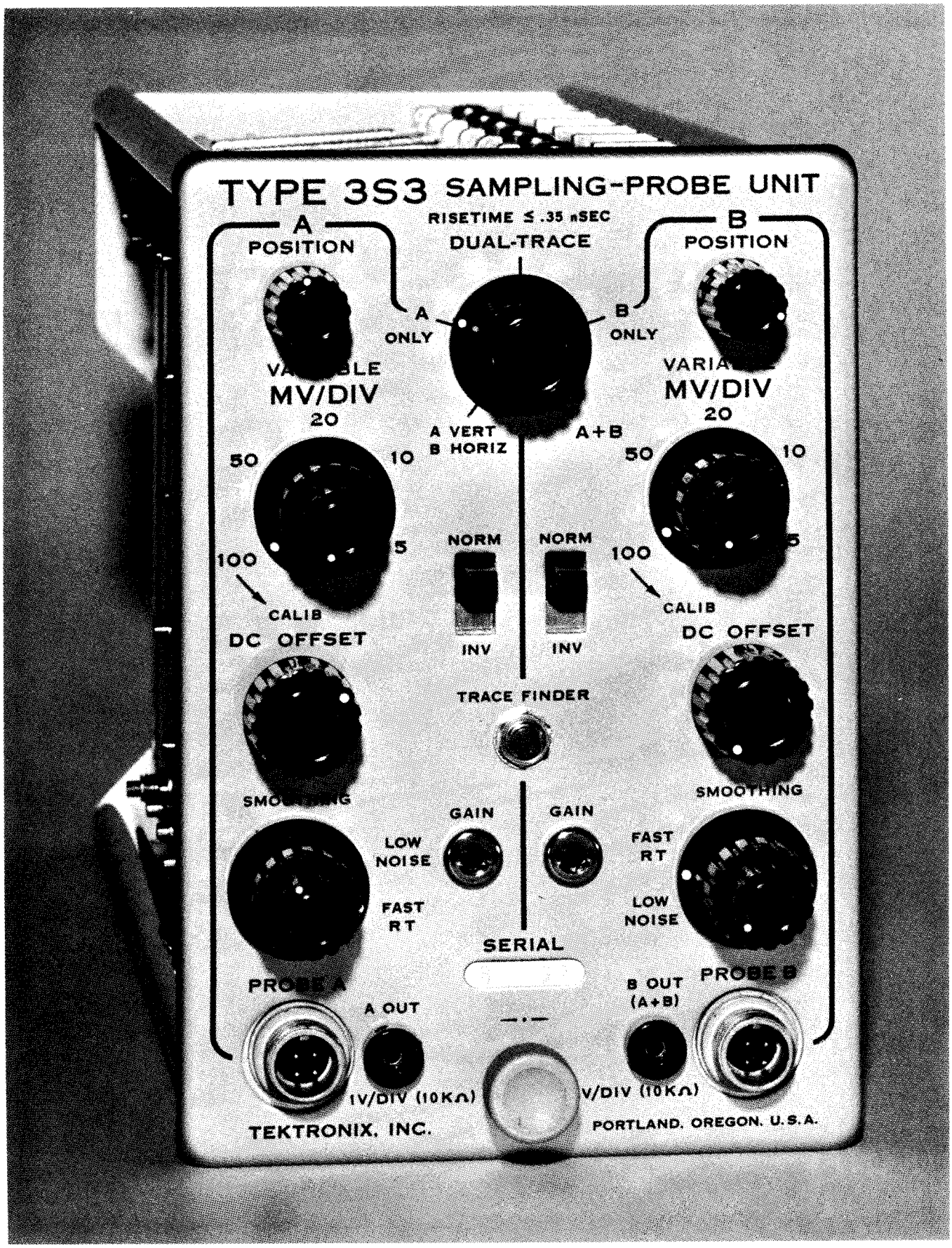

Type 3S3 Sampling-Probe Unit.

SECTION 1
CHARACTERISTICS

General Information

The Tektronix Type 3S3 Sampling-Probe Unit is a dual-trace vertical channel plug-in unit for Tektronix Types 561A, 564, and 567 Oscilloscopes. The Type 3S3, operated with P6038 Direct Sampling Probes, has a basic risetime of 0.35 nsec or less when the signal source impedance is 50 ohms and the Noise-Risetime switch is at FAST RT. The LOW NOISE position of the switch gives the system a risetime of approximately 0.8 nsec. The P6038 sampling probe has a low-frequency input resistance of 100 k paralleled by about 2 pf capacitance. The system is capable of presenting accurate single- or dual-trace displays of repetitive high-speed signals with fractional-nanosecond risetime. By taking successive samples of a repetitive signal, each sample at a slightly later time with respect to the previous sample, the system reconstructs the signal on an equivalent time base.

ELECTRICAL AND MECHANICAL CHARACTERISTICS

Input Resistance

Probe only	100 k ±1%
Probe and 10× Attenuator	1 meg ±1.5%
Probe and Response Normalizer	100 k ±1.5%

Input Capacitance

Probe only	2 pf ±10%
Probe and 10× Attenuator	1.8 pf ±10%
Probe and Response Normalizer	4 pf ±10%

Ac Coupling Capacitor

Capacitance	1000 pf minimum, 100 volts
Approximate low-frequency 3 db point:	
Probe only	1.5 kc
Probe and 10× Attenuator	150 cycles
Probe and Response Normalizer	1.5 kc

Maximum Signal Input

	Linear Display (Dc Plus Peak Ac) Low Noise	Linear Display (Dc Plus Peak Ac) Fast RT	Momentary Dc or Ac Peak Overload
Probe Only	±1.5 v	±3 v	10 v
Probe and 10× Attenuator	±15 v	±30 v	100 v
Probe and Response Normalizer	±1.5 v	±3 v	10 v
Probe and Ac Coupling Capacitor	1.5 v ac	3 v ac	100 v dc

Signal Performance

See Table 1-1.

TABLE 1-1

Input	Source Impedance	Risetime in nsec	Overshoot in %	Noise in mv	Risetime in nsec	Overshoot in %	Noise in mv
		FAST RISETIME			LOW NOISE		
Probe Only	50 Ω	≤ 0.35	3	≤ 2	0.8	2	≤ 0.5
	*300 Ω	* 1.5	* 0	*≤ 2	1.7	0	≤ 2
Probe and Coupling Capacitor	50 Ω	0.38	5	≤ 2	0.8	4	≤ 0.5
	300 Ω	* 2.5	* 0	*≤ 2	3.0	0	≤ 2
Probe and 10× Attenuator	50 Ω	0.37	4	2	0.8	3	0.5
	300 Ω	* 1.5	* 0	* 2	1.7	0	0.5
Probe and Response Normalizer	50 Ω	* 1.5	* 0	* 2	1.7	0	2
	300 Ω	* 5	* 0	* 2	5	0	2

Risetime is 10% to 90%.

Overshoot is peak aberration of first 1 nsec of a square pulse display.

Noise is for single-channel operation at unity loop gain; multiply figures by 1.5 for combined-trace operation.

*SMOOTHING control fully counterclockwise. Dot transient response less than unity.

Deflection Factors

Calibrated steps of 5, 10, 20, 50, and 100 mv/div. Accuracy at unity loop gain: ±3% for all positions of MV/DIV switch with NORM-INV switch at NORM; ±5% for all positions of the MV/DIV switch with NORM-INV switch at INV. A VARIABLE control with about a 3:1 range permits uncalibrated sensitivity increase, thus decreasing the deflection factor of each setting of the MV/DIV switch. Accuracy at full smoothing: ±3% to ±6% for all positions of the MV/DIV switch with NORM-INV switch at NORM; ±5% to ±8% for all positions of the MV/DIV switch with NORM-INV switch at INV.

Triggering

External to Timing Unit. Pretrigger must arrive at Timing Unit external trigger input connector about 60 nsec prior to arrival of signal at input to P6038 Probe when sweep rate is 1 nsec/div or faster. Pretrigger can arrive at Timing Unit more than 60 nsec ahead of signal to P6038 Probe when using slower sweep rates.

Operating Modes

A Only, B Only, Dual-Trace, A + B, and A Vertical — B Horizontal (X-Y operation). The dual-trace switching frequency is one-half the sampling rate.

Rejection ratio for A + B mode is 40:1 or better when each channel is driven with a 0.5-volt flat-top pulse and the deflection factor is 50 mv/div, each channel. At 100 mv/div, A + B, a 4-division identical signal in each channel will produce an 8-division display, ±0.15 division.

Display

Normal or Inverted, permitting the addition or subtraction of dual-trace displays. Valuable in X-Y displays for observation of hysterisis loops, or for inverting the phase of signals into or out of an amplifier for phase comparison. Inverted operation can add an additional 2% error to the deflection factors.

Smoothing

Each channel SMOOTHING control permits adjustment of the dot transient response. Clockwise rotation reduces time jitter and random noise. Valuable when operating at lowest deflection factors. The dot transient response can be made correct for source impedances from at least 50 Ω to approximately 300 Ω when the Noise-Risetime switch is at LOW NOISE; from about 50 Ω to some higher value (dependent upon source capacitance) when the Noise-Risetime switch is at FAST RT.

Dc Offset

The dc component of a signal may be offset up to ±0.5 volt (with a ten-turn control) to either bring a display back onto the crt, or to make an incremental measurement.

Signal Outputs

Signal output jacks, A OUT and B OUT (A + B) are provided. The signal output of each is 1 volt/div, ±3%, on a dc level of about +10 volts when the trace is centered vertically. Output impedance is 10 k.

Trace Finder

Pushing the TRACE FINDER button reduces the vertical amplifier gain by 5, allowing off-screen displays to be located and returned to view.

Dot Slash

The sampling dot vertical stability is such that no slash is visible when triggering at a rate above about 150 cps. At a triggering rate of 50 cps, the dot slash will not exceed 0.2 division.

Co-Channel Time Coincidence

Dual-trace display of a fastrise pulse will produce no more than a 60-picosecond time difference between channels.

Construction

Aluminum-alloy chassis with six plug-in subchassis. Photoetched anodized panel.

Dimensions

Height 6¼ inches, width 4¼ inches, depth 12½ inches.

Weight

6 lbs, 1 oz.

Accessories

	Tektronix Part No.
2 — Instruction Manuals	070-374
2 — P6038 Probe Packages	010-156

SECTION 2

OPERATING INSTRUCTIONS

CAUTION

ALWAYS TURN OFF THE OSCILLOSCOPE POWER BEFORE INSERTING OR REMOVING PLUG-IN UNITS.

General Information

The Type 3S3 with P6038 Direct Sampling Probes is part of a wide-band, high input impedance, dual-channel servo-type, slide-back sampling system. The sampled signal drives a rachet memory that sets the vertical dot position after each sample. The sampling principle is essentially that of an error signal device that corrects a memory output voltage each time a sample is taken. (See "Sampling Notes", Tektronix publication number 061-557.) An external trigger pick-off or other source of triggering signal is required by the associated timing unit.

A minimum deflection factor of about 2 mv/div at the P6038 Probe input may be employed to view low-level signals or portions of larger signals. The DC OFFSET control permits a large signal, ±0.5 volt from ground, to be examined in small detail at maximum sensitivity. The DC OFFSET will position any portion of the signal into view for small detail measurements.

At minimum deflection factors, random noise can be reduced by use of the SMOOTHING control. Smoothing will not significantly affect the display risetime, but will reduce noise if each sample taken represents only a small increment of the total signal amplitude.

The Type 3S3 includes circuits that operate the Type 6R1 Digital Unit for accurate voltage and time measurement of the display. The Type 3S3, Type 3T77, and Type 6R1 operated in a Type 567 Oscilloscope make up a high performance, automatic readout sampling oscilloscope.

FUNCTIONS OF FRONT-PANEL CONTROLS AND CONNECTORS

Mode Switch—Selects one of five operational modes.

A ONLY: Only Channel A is displayed.

B ONLY: Only Channel B is displayed.

DUAL-TRACE: Both channels display separate signals simultaneously; switching between channels occurs at one-half the sampling rate.

A + B: Both channels are combined to display the algebraic sum or difference of two signals as a single trace. Channel B POSITION control positions the trace. Both channel DC OFFSET controls operate.

A VERT B HORIZ: Channel A controls the vertical deflection and Channel B controls the horizontal deflection. Permits X-Y operation at full bandwidth.

POSITION Control (Both Channels) — Permits moving the trace about 10 divisions vertically.

MV/DIV Switch (Both Channels) — Selects the desired vertical deflection factor. For example, with the MV/DIV switch at 100, each major division of vertical deflection corresponds to 100 millivolts of applied signal. The P6038 10X Attenuator will change this example to 1 volt/div.

VARIABLE Control (Both Channels) — At least a 3 to 1 range (uncalibrated) control to permit increased system gain at each position of the MV/DIV switch. Minimum deflection factor (maximum gain) is then about 2 mv/div.

SMOOTHING Control (Both Channels) — Gain control in the Preamplifier that permits adjustment of the sampling system loop gain. With the Noise-Risetime switch at LOW NOISE, the loop gain can be set to unity for a source-impedance range from at least 50 Ω to about 300 Ω. With the Noise-Risetime switch at FAST RT, the loop gain can be set to unity for a source-impedance range from at least 50 Ω to some higher value depending upon the source capacitance at the tip of P6038 Probe.

Time jitter and/or amplitude noise may be objectionable when operating at minimum deflection factors or maximum sweep rates. This is important when making documentation photographs. Clockwise rotation of the SMOOTHING control reduces the loop gain of the automatic slide-back feedback system to allow random noise reduction. (See "Sampling Notes", pages 5 and 6, for additional information about using the SMOOTHING control.) When measuring signals at unknown source impedance, always start with the SMOOTHING control fully clockwise.

To test for proper position of the SMOOTHING control, switch the timing unit DOTS PER DIV switch between 100 and 10, and observe the amount of display change. If the change is insignificant, the SMOOTHING control is not substantially affecting the dot transient response. The transient response will almost always be proper at 100 dots/div with the SMOOTHING control fully clockwise. See "Unity Loop Gain" near the end of this section.

Noise-Risetime Switch (Both Channels) — A switch that changes the conduction time of the probe sampling bridge at the time of each sample. The FAST RT position sets the bridge conduction time for a risetime of 0.35 nsec or less. The LOW NOISE position sets the bridge conduction time to about 0.8 nsec and reduces the sampling system display noise.

DC OFFSET Control (Both Channels) — Applies an internal signal offset voltage of −0.5 to +0.5 volt. May be used to effectively cancel a dc component in the presence of a small ac signal. Permits a chosen portion of the waveform to remain relatively fixed on the crt when the vertical deflection factor is changed. The DC OFFSET control will position any part of a +0.5- to −0.5-volt signal into view even when the MV/DIV switch is at 5. The sampling system may overload off screen, but the display will not be distorted by such high-gain viewing of large signals. (The Digital Unit operates correctly for displays with the 0% and 100% zones within the oscilloscope 8-division graticule limits.)

NORM-INV Switch (Both Channels) — In the NORM position, the crt display has the same polarity as the applied signal, + up and — down. Placing one switch at NORM, the other at INV, and the mode switch to A + B permits the difference of two signals to be presented as a single trace.

GAIN Control (Both Channels) — Permits adjustment of the display amplitude so the Type 3S3 output can match the deflection factor of various oscilloscopes. The GAIN control does not affect the amplitude of information sent to the digital unit operated in a Type 567 Oscilloscope.

TRACE-FINDER — The TRACE FINDER button reduces the overall vertical amplifier gain by 5. Any off-screen display can then be found and the correct positioning action taken to restore it to view.

PROBE A — PROBE B — Each channel has its own P6038 Direct Sampling Probe. Probes may be disconnected and may be interchanged. If probes are interchanged, most internal adjustments require recalibration. Probe A is marked blue and Probe B is marked red for easy identification of proper probe location.

Signal Outputs

The Type 3S3 has two auxiliary output signals (in addition to the regular vertical signals to the crt). The two output connectors are labeled A OUT and B OUT (A + B). Signals at these connectors are 1 volt/div through 10 k, with about a +10-volt level when the trace is centered. External loading of the signal output leads will not disturb normal sampling operations or the crt display. The two auxiliary outputs are for use by external analog paper recorders or oscilloscope monitors.

Operation at A + B mode disconnects the signal to the A OUT connector and supplies the combined signal information to the B OUT (A + B) connector.

PRELIMINARY INSTRUCTIONS

Since the Type 3S3 Sampling Unit is part of a complete sampling system, we suggest that you read the operating instructions section of the oscilloscope and Timing Unit instruction manuals before proceeding.

Installing the Type 3S3

With the oscilloscope power off, turn the securing lock counterclockwise, then push the Type 3S3 as far into the cell as possible. Tighten the securing lock clockwise to complete the plug-in insertion.

To remove the plug-in, first turn off the power, then reverse the installation procedure.

Using the P6038 Probe

The P6038 Probes can be used to signal trace directly within a test circuit, or can be inserted into special chassis or coaxial fittings. (The test-point jack provided with the probe adds about 0.6 pf capacitance to the probe input.) The signal source impedance must be low when measuring pulses with risetime near the system limit.

The P6038 Probe can be compared with any standard oscilloscope probe. The bandwidth (risetime) is limited by internal circuitry and the source resistance-input capacitance time constant. However, the P6038 Probe input capacitance is quite low, nominally 2 pf, allowing a very fast response to low impedance signals.

The major difference between the P6038 Probe and a standard attenuator probe is the sampling circuit. A small signal is sent out the probe tip to the signal source at each sample. This can be reduced a factor of ten by using the 10X Attenuator. Normal sampling pulse kickout is less than 50 mv when the system is at equilibrium, and less than 5 mv using the 10X Attenuator. The kickout is not seen by the sampling system, and if more than about 0.33-nsec delay cable is used between the signal source and the probe tip, the kickout is lost long before the next sample is taken.

Source Impedance Sensitivity

The probe input is sensitive to both source resistance and capacitance, and the system dot transient response varies as the input circuit impedance is varied. The no-signal trace level will shift vertically as the signal source impedance is changed. This is caused by the small amount of kickout from the probe tip. It is impossible to select perfectly equal input bridge diodes, and their minor differences cause the small kickout signal when the system is at equilibrium. (The kickout pulse is a bit larger during the time the sampling bridge is responding to a change in signal level.)

The probe tip is not critically damped when measuring from very low impedance signal sources. The probe tip is a short length of wire between the very tip and the sampling bridge. The tip has about 2 nanohenries of inductance. Combined with the input capacitance of about 2 picofarads, the tip will ring when driven from an impedance under about 33 Ω. The ringing is obvious when the Noise-Risetime switch is at FAST RT and the probe sees an impedance less than 50Ω. Ringing is a less serious problem when the switch is at LOW NOISE. For this reason the Characteristics section of this manual shows risetime figures for 50 Ω operation.

Response Normalizer

To make the probe input insensitive to source impedance, a special non-attenuating Response Normalizer is provided. Placing it on the tip of a probe lets the probe sampling gate "look into" a constant 300 Ω source impedance during the time each sample is taken. Thus, there will be essentially no base-line trace shift due to different source impedances.

The Response Normalizer, however, adds about 2 pf capacitance to the probe input. The system risetime is now limited because the sampling bridge is fed through 300 Ω in series with the signal source impedance. Without the normalizer, the probe input is 100 k paralleled by 2 pf, with a 0.35-nsec risetime. With the normalizer, the probe input is 100 k paralleled by 4 pf, with a risetime of about 1.5 nsec. The advantage of the Response Normalizer is that its use eliminates the trace shift as the signal source impedance is changed.

Using the Response Normalizer on a 1 k source impedance signal produces about a 10-nsec risetime display. This is due to the input time constant limiting the voltage rise rate to the probe input.

10X Attenuator

A second method for making the probe input insensitive to source impedance is to use the 10X Attenuator. This is particularly valuable when measuring signals greater than 0.8 volt peak-to-peak. Using the 10X Attenuator on a 1 k source impedance signal produces between a 5- and 6-nsec rise-time display. Thus, the attenuator has less input capacitance than the Response Normalizer.

The 10X Attenuator is correctly frequency compensated as it leaves the factory. Each attenuator is color coded, and should be used with one probe only. See the P6038 Probe instruction manual for compensation procedure.

Coax-To-Probe Adapters

Three special adapters for mating the P6038 Probe to coax systems are available. Their use is described here.

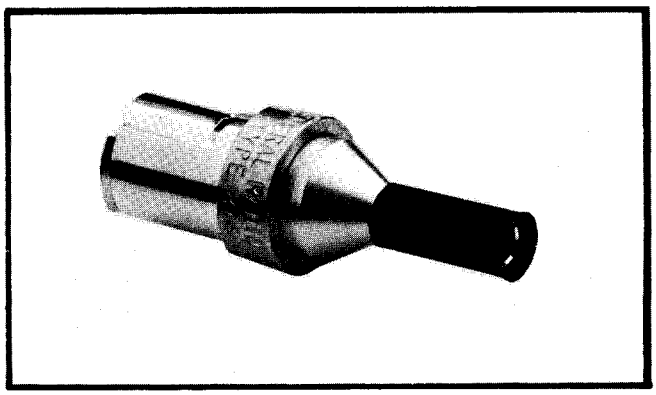

Fig. 2-1. Special GR-To-P6038 Adapter for connecting the P6038 Probe to a 50 Ω line. (Part No. 017-076)

GR-To-P6038 Adapter. The P6038 Probe can be used at the end of an unterminated 50 Ω system (System 5 of Table 2-1) with the correct precautions. Fig. 2-1 shows the GR-To-P6038 Adapter. (Tektronix Part No. 017-076.)

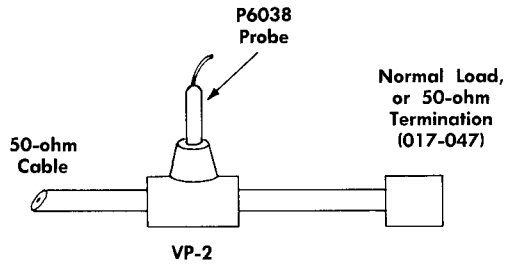

Fig. 2-2. Using the VP-2.

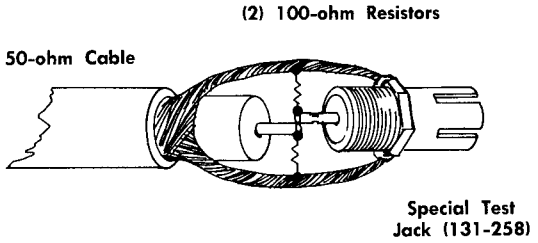

Fig. 2-3. Home-made 50 Ω Termination for P6038 Probe. Make leads as short as possible.

BNC-To-P6038 Adapter. Identical in function to the GR-To-P6038 Adapter, but for cables fitted with BNC connectors. (Tektronix Part No. 103-038.)

Voltage Pickoff. Described as System 8 of Table 2-1 (see Fig. 2-2), the Tektronix Voltage Pickoff Adapter VP-2 permits using the P6038 Probe to look at signals within a closed 50 Ω system with negligible effect upon the signal. The P6038 Probe "looks into" 50 Ω when using the VP-2. (Tektronix Part No. 017-077.)

Terminated 50 Ω System. Fig. 2-3 shows a home-made adapter that can be made by those requiring the P6038 Probe to look at a terminated 50 Ω system. It should be used with the Noise-Risetime switch at LOW NOISE to keep the input circuit overshoot (ringing) to a minimum. This special adapter is recommended over a BNC in-line 50 Ω termination and the BNC-To-P6038 Adapter that will place extra capacitance at the probe tip. The VP-2 is superior to this special adapter.

FIRST TIME OPERATION

The Type 3S3 is calibrated at the factory in a Type 567 Oscilloscope. It is designed to be operated in any Tektronix Type 561A, 564, or 567 Oscilloscope. There are small differences in power supply voltages and crt deflection factors between oscilloscopes that will be apparent in the operation of the Type 3S3. Thus, before using the Type 3S3 for accurate measurements, do the following procedure each time the unit is operated in a different oscilloscope.

Connect the two P6038 Probes to the PROBE A and PROBE B connectors. Mate the probe color to the panel color.

Balance and Gain Procedure

1. Turn on the oscilloscope power and set the Timing Unit controls for a free-running 10 nsec/div trace at 100 dots/div.

2. Set the Type 3S3 controls:

POSITION	Midrange
MV/DIV	100
VARIABLE	CALIB
NORM-INV	NORM
Mode	A ONLY
DC OFFSET	Five turns from either end
Noise-Risetime	FAST RT
SMOOTHING	Fully clockwise

3. Place the Channel A probe tip into the 50-ohm environment of Fig. 5-1. Center the trace and let the instrument warm up for 15 minutes.

4. Adjust the DC OFFSET control for no trace shift while turning the VARIABLE control through its range. Recenter the trace with the POSITION control. The DC OFFSET control must remain at this position through step 6.

5. Turn the SMOOTHING control through its range. If the trace moves more than one-half division, do the following.

a. Remove the oscilloscope left side panel and adjust the A Memory SMOOTHING BALANCE control for no trace shift when the SMOOTHING control is turned. (The SMOOTHING BALANCE control for Channel A is on the 2nd subchassis from the front; the SMOOTHING BALANCE control for Channel B is on the 3rd subchassis.)

b. Return the SMOOTHING control fully clockwise. Check that the DC OFFSET control position has not changed (from step 4). Reposition the trace to the graticule center with the POSITION control.

6. Set the MV/DIV switch to 20. Operate the Noise-Risetime switch between LOW NOISE and FAST RT. If the trace moves more than two divisions, do the following:

a. With the Noise-Risetime switch at LOW NOISE, recenter the trace by adjusting the A RISETIME BAL control, R175, located on the Gate Generator subchassis.

b. Set the Noise-Risetime switch to FAST RT and recenter the trace with the A BRIDGE BAL control, R185, also located on the Gate Generator subchassis. Repeat (a) and (b).

c. Set the MV/DIV switch to 5 and again perform steps (a) and (b). Final adjustment is when the Noise-Risetime switch can be at either position and the trace will not move more than one division for any position of the MV/DIV switch.

7A. Gain Adjustment — With Digital Unit

a. Set the Type 3S3 controls:

MV/DIV	100
VARIABLE	CALIB
Noise-Risetime	FAST RT
SMOOTHING	Counterclockwise

b. Touch the probe tip to the oscilloscope Amplitude Calibrator 0.5-volt jack (the calibrator must provide a 60-cps square wave). Adjust the Timing Unit Recovery Time control until a square wave drifts slowly across the crt.

c. Set the Digital Unit to measure rising-slope voltage, with the A 100% ZONE SET control adjusted so the 100% intensified zone is at the graticule center. As the display drifts slowly the Digital Unit will indicate the pulse amplitude when the 100% intensified zone is at the pulse top. Adjust the Type 3S3 GAIN control so the display amplitude is the same as the digital readout value. The display vertical deflection factor is now within 3%.

7B. Gain Adjustment — Without Digital Unit

a. Do steps 7A (a) and (b).

b. Adjust the GAIN control so the display amplitude is 5 divisions peak-to-peak. Do not adjust the internal DIGITAL GAIN control.

8. Repeat step 7 for Channel B. Replace oscilloscope side panel.

It is important that this procedure be completed each time the Type 3S3 is operated in a different oscilloscope.

The P6038 Probe(s) will now operate in balance for either LOW NOISE or FAST RT operation for source impedances from 50 Ω up to about 300 Ω. The DC OFFSET control must be adjusted (as in the balance procedure) for each different source impedance if it is desired that the trace shift be minor when switching the Noise-Risetime switch. This type of operation is not always necessary, but can be of value when signal tracing and making a quick risetime measurement. See "Signal Searching—Signal Analyzing Suggestions" just ahead of Table 2-1.

Dual-Trace Operation

The dual-trace feature of the Type 3S3 permits viewing signals into and out of an amplifier or signals of differing amplitude and time delay, but not signals of differing repetition rate or frequency unless harmonically related or otherwise synchronously coupled. A suggested system is illustrated in Fig. 2-4.

Use the following procedure for setting up the Type 3S3.

1. Set the Mode switch to DUAL-TRACE.

2. Set the MV/DIV switches to the approximate values for 3 or 4 divisions of display on each channel. If necessary, use the 10X Attenuator on the probe at the amplifier output.

3. Set the SMOOTHING controls fully clockwise.

4. Set the Noise-Risetime switches to FAST RT.

5. If the amplifier inverts the signal, you may wish to place one NORM-INV switch to NORM and the other to INV.

6. If a signal has a dc component over 1 volt, be sure to ac-couple it at the input. The peak-to-peak input should not exceed 3 volts.

Triggering the Sampling System

The Type 3S3 has no internal trigger takeoff system. Therefore, an external trigger signal must be applied to the Timing Unit. Two convenient trigger-signal sources are an in-line trigger takeoff system, such as available in the Tektronix Type 110, or an external trigger-output signal from a pulse generator such as the Tektronix Type 105, 107, or 111.

To complete the dual-trace operation, set the Type 3T77 controls as follows:

1. Set the INT.-EXT. Triggering Source switch to EXT + or —, depending upon the polarity of the triggering signal.

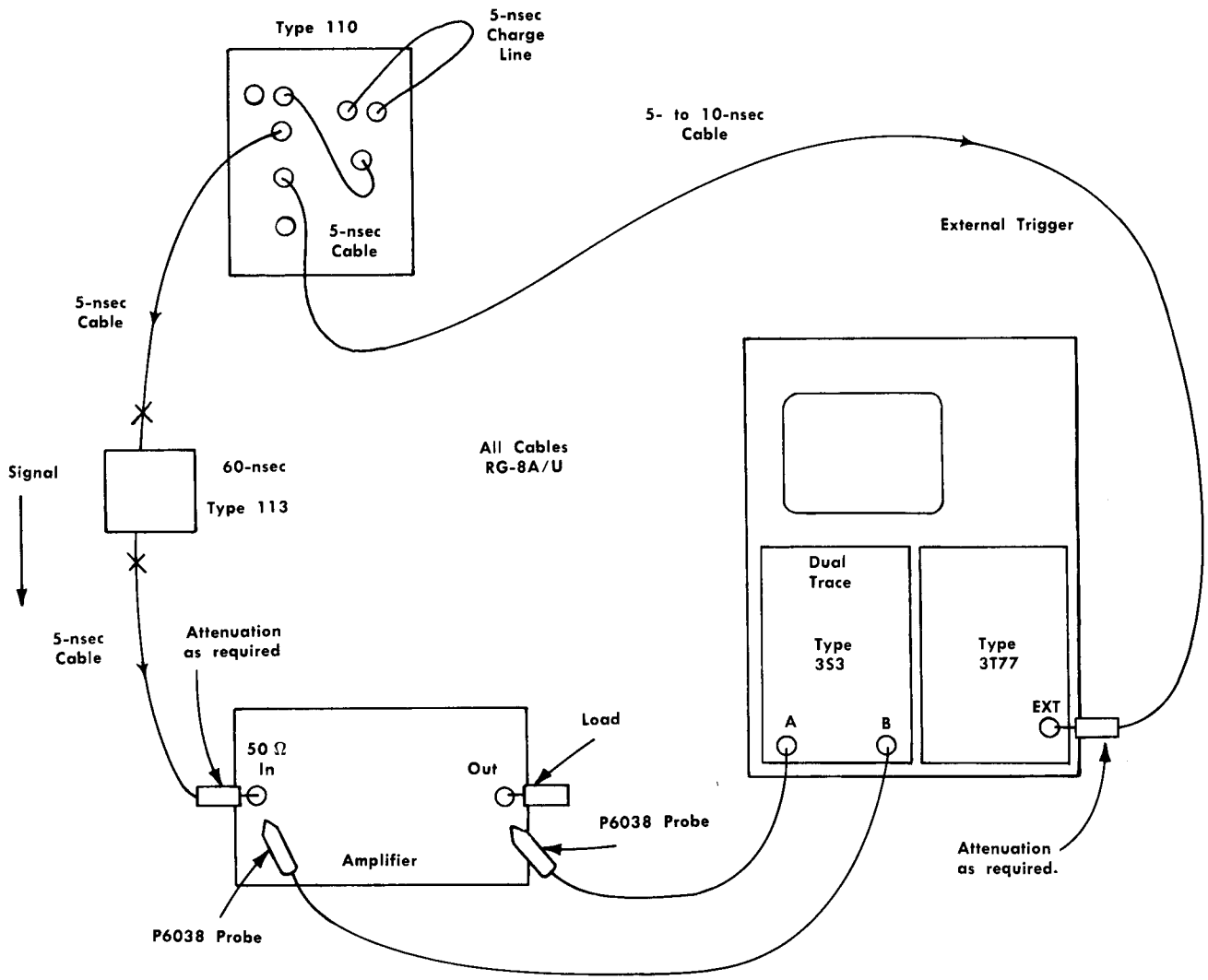

Fig. 2-4. Pulse testing an amplifier.

2. Select a sweep rate to display two or three cycles of the signal. If unknown, start at 10 nsec/div.

3. Set the DOTS/DIV switch to 100.

4. Set the DELAY control to midrange. It can be set later to properly position the waveform on the crt.

5. Set the RECOVERY TIME control fully counterclockwise.

6. Set the TRIGGER SENSITIVITY control for proper triggering, just counterclockwise of the free-run position.

7. The display should be a faithful reconstruction of the signal. If you have trouble obtaining a stable or properly triggered display, the problem may be either trigger signal amplitude too high or too low, trigger signal frequency too high or too low, or internal interference due to recovery time.

To find the cause, first check the position of the TRIGGER SENSITIVITY control, and/or turn the RECOVERY TIME control. If the TRIGGER SENSITIVITY control cannot stop the display (by turning it counterclockwise), the trigger-signal amplitude is too high. Or if a stable display cannot be obtained before the sweep free-runs, the trigger signal amplitude is too low.

If adjustment of the TRIGGER SENSITIVITY and RECOVERY TIME controls produces triggering, but it is jittery or confused, the trigger-signal frequency may be too high or too low.

Set the TIME/DIV switch to 1 nSEC, and if the display is other than the beginning of a waveform, the trigger-signal frequency is too high. In this case, a trigger-countdown device such as the Tektronix Type 280 is needed. External synchronization, using the Type 280, operates to 5000 mc.

Low-frequency sine-wave trigger-signal amplitude must be at least 16 mv peak-to-peak below about 250 mc. Additional

amplitude is needed when the triggering signal is below about 200 kc.

If confused triggering occurs in the form of multiple traces, try turning the RECOVERY TIME control while changing the position of the TIME/DIV switch.

A combination of recovery time and sweep rate can be found which will produce a stable display except at low frequencies. The object is to time the arrival of the trigger signal with respect to the recovery of the trigger circuits to prevent premature retriggering.

If making time or voltage measurements directly from the crt, it is usually best to align the display with the appropriate vertical or horizontal graticule markings. The graticule can then serve as a scale from which to make either time or amplitude measurements.

With the aid of the DC OFFSET control, any point on a waveform within ±0.5 volt of ground can be made to stay relatively fixed on the crt independent of vertical sensitivity. The POSITION control will then place that portion of the waveform wherever desired within the control limits. Remember: The POSITION control is approximately a +8- to —8-division control. The DC OFFSET is an input ±0.5-volt control.

To check that the system dot transient response is proper, set the DOTS/DIV switch of the Type 3T77 to 10. If the risetime or the peak-to-peak amplitude of the display are not altered, the system has correct dot transient response. If the signal repetition rate is fast enough, correct operation can occur with the SMOOTHING control clockwise and 100 dots/div.

Unity Loop Gain (Correct Dot Response)

To set the sampling system loop gain to unity, set the Timing Unit DOTS/DIV switch to 10 and the TIME/DIV switch so the display pulse rise has only two or three dots. Turn the DELAY control slowly to "paint-in" the true pulse waveshape. Set the DOTS/DIV switch to 100. If the peak of the pulse is different than the "painted-in" pulse peak at 10 dots/div, adjust the SMOOTHING control until the many-dot display and the "painted-in" 10-dot display appear equal. This is the point where the loop gain is unity.

If the loop gain is greater than unity, the display will be either excessively noisy, tearing at the display beginning, or spread all over the crt. This is particularly true when operating at LOW NOISE.

If the loop gain is less than unity, the display amplitude will decrease for sine waves, and the amplitude of a fast-rise pulse will be low at the end of the rise. This is particularly true when the Timing Unit is operating at 10 dots/div. The sampling system can always be operated at something less than unity loop gain if there are 100 dots/div to correct for these display limits just described.

Voltage Measurements

Vertical displacement of the crt trace is directly proportional to the voltage at the input to the P6038 Probe. The amount of displacement, for a given voltage, can be selected with the MV/DIV switch. To provide sufficient deflection for best resolution, set the MV/DIV switch so the display spans a large portion of the graticule. Also, when measuring between points on a display, measure consistently from either the bottom or top of the trace so the width of the trace is not included in your measurements.

To make a voltage-difference measurement between two points on a display, proceed as follows:

1. Using the graticule as a scale, note the vertical deflection, in divisions, between the two points on the display. Make sure the VARIABLE control is in the CALIB position.

2. Multiply the divisions of vertical deflection by the numerical setting of the MV/DIV switch and the attenuation factor (if any) of an attenuator. The product is the voltage difference between the two points measured.

If desired, you can measure the instantaneous (or dc) voltage-to-ground of a signal. This is accomplished in the same general manner as described previously. However, with no signal applied, you must first establish a ground reference point on the crt. To do this, allow the Timing Unit to present a free-running trace, and install either the Response Normalizer or the 10X Attenuator to the probe tip. Then, vertically position the trace so that it is exactly aligned with one of the horizontal graticule lines. (This assumes no vertical shift in the trace base-line due to unequal duty cycle of an ac-coupled pulse train.) The actual graticule line selected will be largely determined by the polarity and amplitude of the applied signal. After this point, make no further adjustments with the POSITION or the DC OFFSET controls. Once the ground reference is established, apply the signal and measure the voltage in the same manner as described previously. Use the established ground reference as the point from which to make all measurements.

If the applied signal has a relatively high dc level, the ground-reference point and the actual signal may be so far apart that one or both will not be in the viewing area of the graticule. In this case, refer to the description of the DC OFFSET control earlier in this section.

Voltage Pickoff in Terminated Coax

The P6038 Probe can be used to look at the voltage signal in a terminated 50 Ω coax line by using the Tektronix VP-2. The VP-2 is a specially designed Tee adapter that causes very little reflection in a closed coax system. (An ordinary coax Tee causes considerable reflections.) The VP-2 provides a 50 Ω source impedance to the P6038 Probe (there is 25 Ω in series with the tip inside the VP-2). Its use allows the P6038 Probe to observe signals on the coax center conductor while essentially not disturbing the information on its way to its normal load. Use of the VP-2 will degrade fast signal rise-time slightly.

A more accurate method of measuring voltage amplitude of a display (other than dc) is to use a Type 6R1 Digital Unit in a Type 567 Oscilloscope. See the Type 6R1 Instruction Manual for operating information. The Type 6R1 will measure the amplitude of displays whose peak-to-peak level is visible on the crt. It is not accurate if the peak-to-peak level extends outside an 8-division graticule.

Pulse Risetime Measurements

To make accurate measurement of a fast-rise pulse risetime, consider the following:

1. The oscilloscope crt alignment must be correct so that a free-running sweep is parallel to a horizontally scribed graticule line. See the note on alignment of the crt in the oscilloscope instruction manual.

2. The Timing Unit must be correctly calibrated. This can be checked quickly by inserting a 30-cm air line (1-nsec delay) in series with the external triggering signal cable and noting the trace shift.

3. The signal source impedance must be low (50 Ω) to obtain the Type 3S3/P6038 0.35-nsec risetime performance.

4. If the signal repetition rate is low, and if you use 10 dots/div, the dot transient response must be checked and the SMOOTHING control correctly adjusted.

5. Calculate the signal true risetime from the following:

If the pulse signal is transported to the P6038 Probe through a short section of coaxial cable, and if the cable is as large as RG-8A/U exhibiting essentially no high-frequency attenuation in the form of "dribble-up", the pulse-display risetime T_r is

TABLE 2-1
Type 3S3 P6038 Input Systems

System	Advantages	Limitations	Accessories Required	Source Loading. See P6038 Instruction Manual, Input R_P and C_P Curves.	Precautions
1. Probe only.	Convenient for most uses.	Trace shift with source impedance changes. Dc and ac voltage. Ground clip will ring at high frequency.	Use ground clip provided or special adapter.	100 k + 2 pf plus C of adapter.	Dot transient response varies with signal source impedance. Less than 50 mv sampling - pulse kickout into test circuit.
2. Probe plus 10X Attenuator.	No trace shift with different source impedance. Can handle larger signals. Reduced sampling - pulse kickout.	Careful compensation required. Loss of sensitivity.	Use ground clip provided or special adapter.	1 meg + 1.8 pf plus C of adapter.	Compensate at beginning of each use.
3. Probe and Ac Coupling Capacitor.	Dc voltage isolation.	Adds some C and L to probe tip.	Use ground clip provided or special adapter.	100 k + 3.5 pf plus C of adapter.	Degraded risetime to charge 3.5 pf.
4. Probe and Response Normalizer.	Minimum trace shift with different source impedance. Full sensitivity.	Degraded risetime.	Use ground clip provided or special adapter.	100 k + 4 pf. 300 Ω for ≈ 1/3 nsec.	Input voltage limited to probe V Max.
5. Probe into unterminated coaxial cable.	R_O (of cable) as source Z to probe. Full bandwidth to 2T of cable, then reflections. Full sensitivity.	Input Z remains R_O for only 2T of cable. Ok for 50Ω systems only, and for pulses shorter than 2T of cable.	Adapter at cable end. Coaxial attenuator(s), such as 5X at source. Ac Coupler.	R_O + 2 pf for 2T of cable, then all of cable C on source.	100% reflection sent back to source.
6. Terminated coax; termination at probe tip.	R_O/2 at probe tip without cable 2T limit. Full bandwidth. 1/2 sensitivity of system 5.	2 pf of probe tip causes reflections. Probe tip rings.	Termination and adapter. Ac Coupler.	R_O + 2 pf. R_O + 3.5 pf if Ac Coupler used. Plus adapter C.	Reflection of input C. Dc and ac loading on test point. Power limit of termination.
7. Same as 6, with coaxial attenuator at termination.	Less reflection from 2-pf input.	Reduced signal. Probe tip rings.	Attenuators with correct fittings.	R_O only.	
8. Tap into terminated coaxial system.	Permits signal to go to normal load. Dc or ac coupling without coaxial attenuators.	2 pf load at tap point. 3.5 pf if Ac Coupler is used.	Special tap adapter such as Tektronix VP-2.	See probe or 10X Attenuator input curves, also P6038 Probe manual.	Reflection from probe 2 pf, or attenuator 1.8 pf. Use attenuator to stop probe kickout going to load.

$$T_r = \sqrt{(\text{Signal } T_r)^2 + (\text{Scope } T_r)^2}$$

Transposing:

$$\text{Signal } T_r = \sqrt{T_r^2 - (\text{Scope } T_r)^2}.$$

Signal Searching — Signal Analyzing Suggestions

When signal tracing through a circuit and the crt display does not need to show waveshape details, the following suggestions may be of value:

1. Assemble the P6038 Probe 10X Attenuator and an Ac Coupler.

2. Set the Noise-Risetime switch to LOW NOISE and the SMOOTHING control fully clockwise.

3. Set the Timing Unit DOTS/DIV switch to 100. Set other Timing Unit controls as required for proper triggering.

4. When signal tracing through a circuit, the Timing Unit DELAY control may have to be adjusted to restore the display to mid-crt if significant signal delay exists between test points.

To view precise waveshapes at a test point, obtain a display and then set the system loop gain (dot transient response) to unity, or as close to unity as the input circuit impedance will alow. See the paragraph at the end of "Triggering the Sampling System", in this section. Use as many dots/div as the signal repetition rate (display flicker) will allow.

P6038 Input Systems

Table 2-1 is a quick reference guide for using the P6038 Probe most effectively. Not every situation is included, but many forms of input systems commonly used with direct-sampling probes are included. The letter "C" means capacitance, "T" means time, and "L" means inductance.

SECTION 3

CIRCUIT DESCRIPTION

General Information

Most circuits in the Type 3S3 are on plug-in subchassis. The main frame contains only the preamplifier circuits, controls, interconnections, and cables. You may wish to refer to the Tektronix publication "Sampling Notes", publication number 061-557, during the following discussion.

Block Diagram

The Type 3S3 simplified block diagram of Fig. 3-1 shows each circuit in block form, with all front-panel controls identified. Since the two channels are nearly identical, only the Channel A circuits are shown. A detailed block diagram is included with the schematics at the back of this manual.

External trigger information to the Timing Unit starts the sampling cycle. The Timing Unit sends command pulses to the Type 3S3 Gate Generator. The Gate Generator sends very short duration push-pull pulses to both P6038 Probes, and longer duration pulses to both Memory circuits. The pulses from the Gate Generator first connect the signal to the preamplifiers, and then each preamplifier to its Memory.

Input signals arrive at the P6038 Probe sampling gate. The sampling gate is biased to conduction by the Gate Generator as command pulses arrive from the timing unit. The sampling gate output signal is a series of pulses, amplified by the preamplifier, and coupled through the MV/DIV switch to the Memory. The Memory input circuit is an Ac Amplifier that raises the signal level for the Memory. The Gate Generator biases a two-diode gate at the Memory input to conduction as the signal arrives.

The Memory amplifies and stores the signal. The Memory output is sent to the Inverter, and to the probe and input circuit to set the voltage equal to the signal at the time of the sample. (The next sample only corrects for any signal change since the last sample.) The Memory output signal can be inverted by the unity gain Inverter. The output of both channels then pass to the Dual-Trace electronic switch where either or both are sent on to the Vertical Amplifier, and each is available for the oscilloscope Digital Unit.

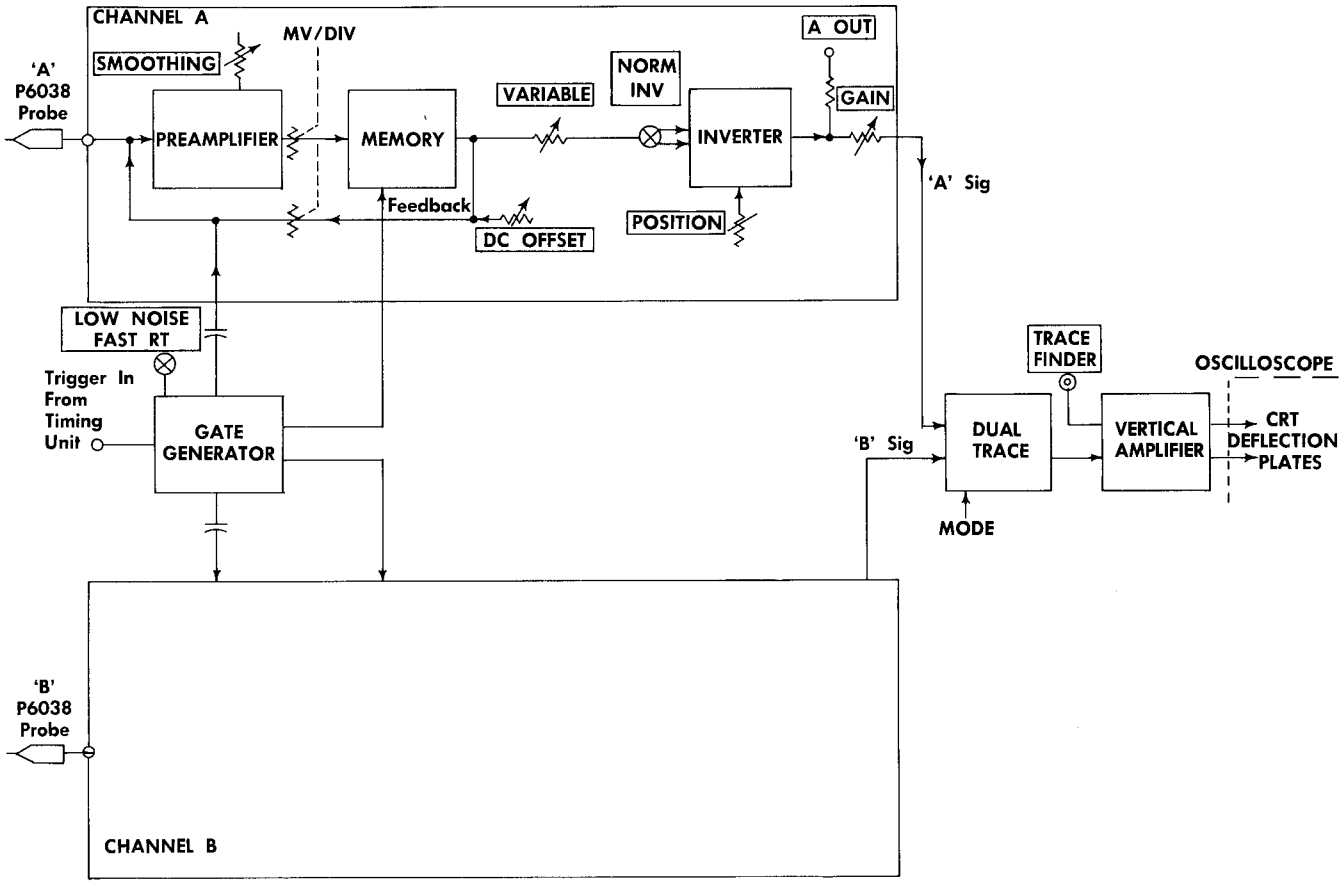

Fig. 3-1. Type 3S3 simplified block diagram, Channel B is essentially the same as Channel A.

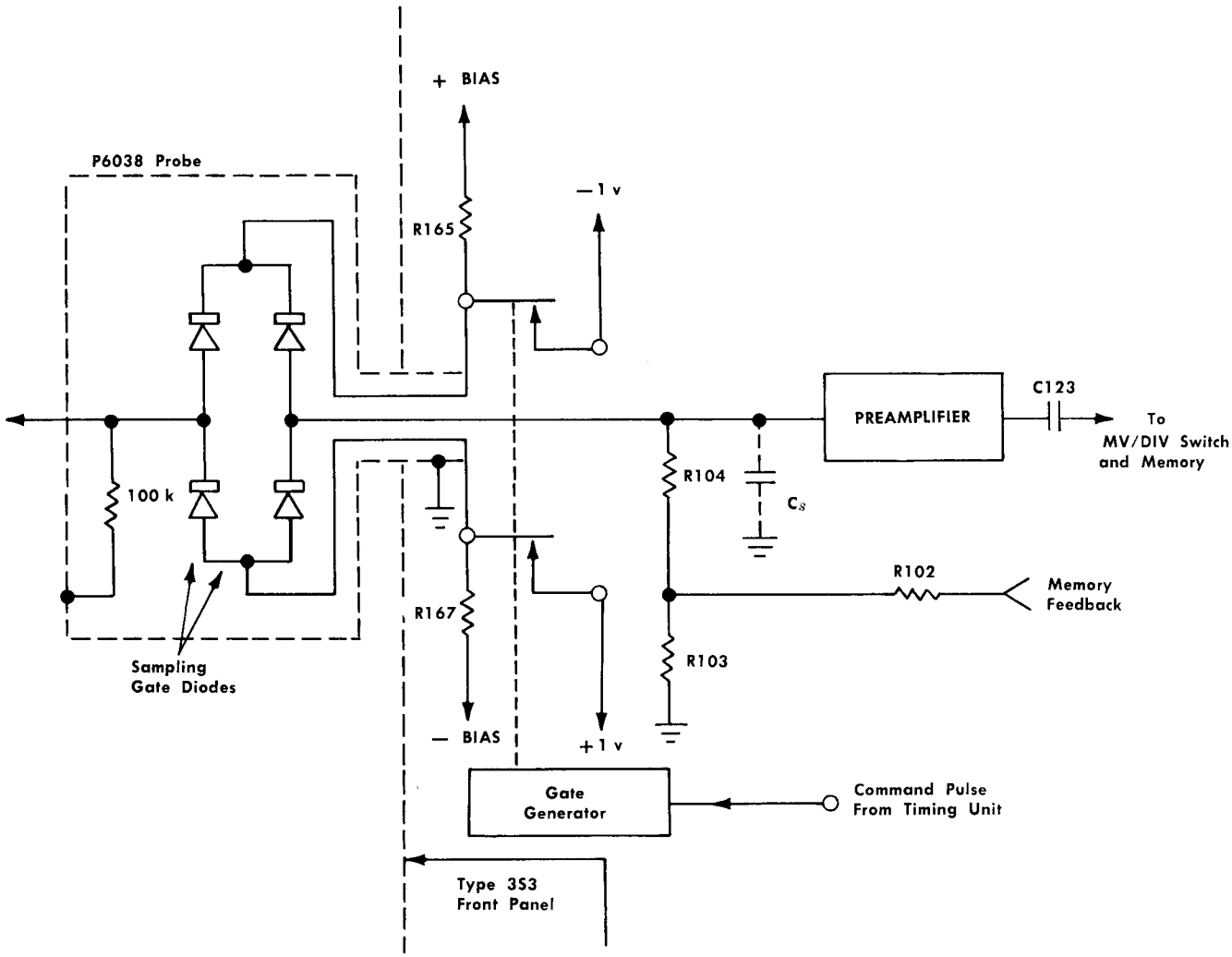

Fig. 3-2. Simplified Channel A input.

P6038 Probe

The Type 3S3 input is via the P6038 Probe shown in simplified form in Fig. 3-2. The probe is the heart of the sampling system where the 0.35-nsec risetime performance is established. The input impedance is 100 k paralleled by about 2 pf.

Fig. 3-2 shows the probe sampling gate is normally reverse biased (about 4 to 5 volts). The relay contacts represent an equivalent method of applying forward bias to the sampling gate. If the relay is closed momentarily, the gate is forward biased and connects the signal to the Preamplifier. The duration of forward biasing is slightly less than 0.35 nsec; so fast that the probe cable and Preamplifier shunt capacitance (Cs) limit the signal to the Preamplifier grid to about 2% of the input amplitude. Cs is stray input capacitance that increases the signal duration at the Preamplifier input. Because only about 2% of the signal gets to the Preamplifier, the sampling efficiency is about 2%.

Gate Generator (Series A, Model 1)

The pulses that gate the sampling diodes into conduction are formed by a snap-off diode and clipping line, driven by a blocking oscillator, Q200. The blocking oscillator also drives the Memory input gates via the memory gate width amplifier, Q214.

The Gate Generator quiescent state is as follows: Q200 is held cut-off by reverse bias developed across D202. The emitter and base rest at +20 volts. The collector of Q200 rests slightly below ground due to about 20 ma of current flowing in the snap-off diode D200. The memory-gate amplifier Q214 is cut off with its base at about +0.3 volt due to the drop across D212.

As the positive trigger pulse arrives from the Timing Unit, the following action takes place:

The Timing Unit command pulse passes through coupling capacitor C209 and diode D207 to the collector of Q200. Q200 is a common-emmitter type blocking-oscillator. When the positive trigger pulse is received, signal current passes through the collector winding of T200. Signal current in the collector winding induces a voltage in the base winding that overcomes the back-bias at the base and turns the transistor on for a blocking-oscillator cycle. The fast current rise which then occurs in the collector of Q200 is directy coupled to the snap-off circuit. During turn-on, Q200 base-emitter junction is forward biased by the feedback winding of T200. C202 receives a charge that will aid in stopping any self oscillation after the trigger pulse is gone.

After the collector voltage of Q200 rises to the saturation point, the normal blocking-oscillator back swing tries to occur. At the same time the charge on C202 back-biases the base of Q200, allowing a quick return to equilibrium.

The quiescent condition of snap-off diode D200 is set by the SNAP-OFF CURRENT control, R205. The circuit typically carries about 20 ma of forward current through D200. This forward current assures that D200 has many carriers within its junction region. As the forward current is suddenly reversed, the carriers require a short time to clear out and open the diode in a normal reverse bias condition. Snap-off diode D200 is reverse biased by the pulse from Q200 but does not become a high impedance immediately.

As the pulse from Q200 arrives at D200, a high reverse current builds up in the clipping line and D200. As the carriers clear out of the D200 junction, the reverse current stops suddenly, sending a fast-rise voltage pulse into the 50 Ω clipping line and toward each probe.

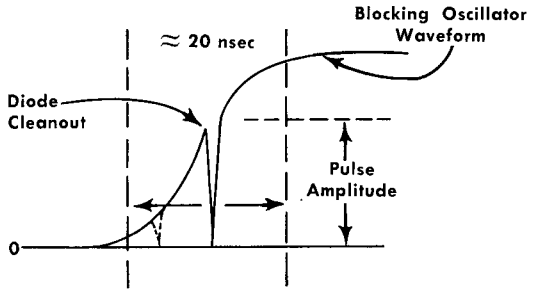

Fig. 3-3. Principle of snap-off diode action as SNAP-OFF CURRENT control is adjusted.

The blocking oscillator output pulse has a finite risetime. The snap-off diode reverse-cleanout delay is proportional to the forward bias applied (SNAP-OFF CURRENT adjustment). Thus, the interrogate pulse amplitude is set by the SNAP-OFF CURRENT control position. See Fig. 3-3.

The sharp step that appears at the clipping line input at snap-off is propagated down the line. The line acts as a balanced transmission line, terminated in a short circuit. The step travels to the short circuit in a finite time. When it reaches the short, it is reflected, equal in amplitude and opposite in polarity, back to the snap-off diode and the probes. The reflection reverses the intial fast-pulse polarity, limiting the pulse duration to a very short time, and the snap-off diode returns to its normal forward bias condition. T160 balances the fast sampling pulses that are sent to the probe. The sampling pulse (Gate Generator output pulse to probes) is of triangular form with a duration greater than 1 nsec at its base and less than 0.35 nsec at the peak.

Low Noise—Fast Risetime

The system risetime is altered by changing the peak value of the Gate Generator pulse that causes the sampling gates to conduct. The Type 3S3 uses a switch that changes the value of the bridge volts (reverse bias) instead of changing the pulse amplitude. By this method, the peak value of gate pulse is effectively changed as shown in Fig. 3-4, thus changing the length of time the sampling gates conduct and the system risetime.

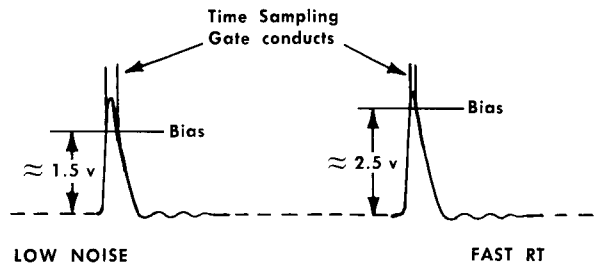

Fig. 3-4. Two conditions of Low Noise-Fast Risetime switch, idealized waveforms.

When the Low Noise-Fast Risetime switch is at LOW NOISE, R181 and R189 are placed in parallel with the BRIDGE VOLTS control. This reduces the amount of sampling bridge reverse bias. The sampling diodes' balance changes slightly with a change of bridge volts. The combination of the BRIDGE BAL and RISETIME BAL controls allows each probe gate to be balanced for both bias conditions of the Low Noise-Fast Risetime switch.

Memory Gate Width

The memory is allowed to receive signals only when a sample is taken. Because the feedback loop contains positive feedback, the output of the Preamplifier must be disconnected from the memory input while the feedback loop is shifting the level at the input to the Preamplifier. The Gate Generator subchassis has a memory gate driver that controls the memory gates.

Memory gate amplifier Q214 is normally biased to cut-off due to drop across D212 and current through the MEMORY GATE WIDTH control R215 and R213. Q214 collector rests at —12.2 volts. The collector current path is through the two windings of the two Memory gates, not through D216 and R216. As Q200 pulses, a third winding of T200 couples a negative signal through D212 to the base of Q214, causing Q214 to saturate. Q214 collector rises nearly to ground and its current flows through the two Memory gates. Car-

rier storage, variable by the MEMORY GATE WIDTH control, assures that Q214 will stay at saturation for typically 0.4 μsec. As the collector of Q214 falls, D216 and R216 critically damp the Memory gate transformers to prevent ringing.

Sampler Controls

The Gate Generator subchassis contains nearly all internal adjustments that control the sampling efficiency and loop gain; they are: SNAP-OFF CURRENT, MEMORY GATE WIDTH, A BRIDGE VOLTS, A and B BRIDGE BAL, and A and B RISETIME BAL controls. Note that there is no B BRIDGE VOLTS control. The bridge bias volts of Channel B is fixed, and the A BRIDGE VOLTS control allows the bridge bias volts of Channel A to be adjusted so both channels perform with the same risetime.

Two other controls in each channel affect the system operation. Each Memory subchassis has a LOOP GAIN and a SMOOTHING BALANCE control. Their functions are described with the Memory circuit description.

Preamplifier

The Preamplifier consists of two cascaded amplifiers, V114A, and the combination of V114B, Q124, and Q123. V114A is a voltage amplifier with a variable plate load, the SMOOTHING control. V114B, Q124, and Q123 form an operational amplifier with a high voltage gain. The supply voltage for V114A, and the first two elements of the operational amplifier, is double decoupled from the +125-volt supply. The entire amplifier negative return is to the —12.2-volt supply, and the collector supply of Q123 is decoupled from the +20-volt supply.

Preamplifier gain is best described as voltage input and current output. If the input grid of V114A receives 0.1 volt, its plate will drive 0.5 ma to the operational amplifier (if the SMOOTHING control is fully counterclockwise at full gain). The operational amplifier has a virtual ground input impedance due to the feedback from the emitter of Q123. The internal-loop of the operational amplifier drives the base of Q123 about 2 volts for each input 0.1 ma at the grid of V114B. (2 volts across R123 equals 0.1 ma through R123 to the grid of V114B.) With 0.1-volt input, the preamplifier output will be 10 volts.

Sampling efficiency of the P6038-Type 3S3 is about 10% or less. Under ideal conditions, about 10% of the signal at the probe tip reaches the grid of V114A. Signal source capacitance, and/or operation for fastrise signals, can reduce the sampling efficiency to about 2%. Thus, with a 1-volt signal at the probe tip, the input signal to V114A can be between about 20 mv and 100 mv.

Signals from the probe are fast pulses, one each time a sample is taken. Right after the grid of V114A has responded to the signal, feedback from the Memory sets the input voltage level equal to the true signal value.

The bypass capacitor C117 in the cathode circuit of V114A, and the coupling circuit between V114A and V114B, differentiate both the signal and the feedback, thus allowing the circuit to return to equilibrium before the next sample is taken.

Fast positive input signals turn on Q123 in normal forward bias fashion. Fast negative going signals may turn Q123 off faster than its emitter can fall, in which case D123 conducts and drives the emitter negative at the signal rate.

The Preamplifier output is ac coupled to the Memory subchassis through a section of the MV/DIV switch. The system, including the Preamplifier output, the MV/DIV switch and the Ac Amplifier (Memory subchassis), is shown in Fig. 3-5.

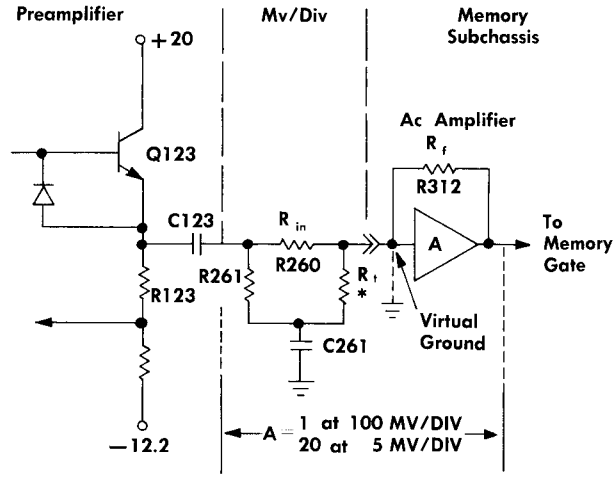

Fig. 3-5. Simplified connections from Preamplifier output to (Memory) Ac Amplifier input. *R_T = Parallel value of all other R260 and R261 resistors.

AC Amplifier

The Input circuit of the Memory subchassis is a two-transistor operational amplifier with its gain controlled by the MV/DIV switch resistance in series with the base of Q304. The input signal from the Preamplifier always looks into a 1 k load. The series resistor, R_{in} of Fig. 3-5, sets the Ac Amplifier voltage gain according to R_f/R_{in}. When the MV/DIV switch is at 5, R260E (1 k) sets the voltage gain at 30. When the MV/DIV switch is at 100, R260A (21 k) sets the voltage gain at 1.5. The resistor R_T of Fig. 3-5 has no significant effect upon the circuit because it is in parallel with the virtual ground input resistance of the Ac Amplifier.

The input of the Ac Amplifier rests about —0.3 volt from ground which requires ac coupling of the 1 k resistance to ground of the MV/DIV switch (C261). Thus, the signal differentiation by C123 and the 1 k value of the MV/DIV switch is accomplished at the voltage of the Ac Amplifier input.

The Ac Amplifier output is set by R313, the LOOP GAIN control. R313 is adjusted during calibration so the system loop gain (dot transient response) is correct for 50 Ω source impedance signals at the tip of the P6038 Probe when the SMOOTHING control is fully counterclockwise and the Noise-Risetime switch is at FAST RT.

The signal pulses handled by the Ac Amplifier are about 0.5 to 1 μsec in duration. The amplifier output voltage can

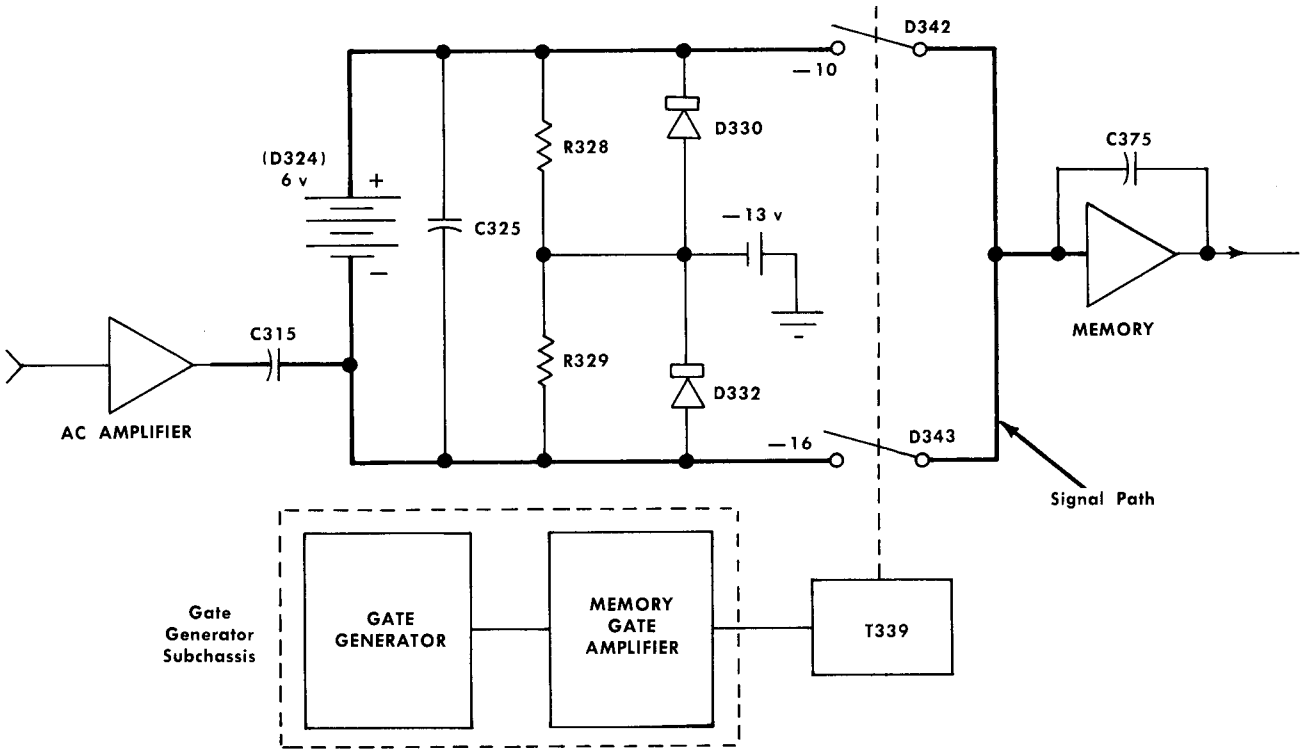

Fig. 3-6. Simplified memory gate.

change a maximum of about 2 volts in about 0.1 μsec. Normally the system causes the output pulses to be less than 1 volt, but if the display moves 8 divisions in one sample, the output pulse will be about 1.6 volts peak. The output impedance of the circuit is low enough to charge C315 during the time the Memory Gate conducts.

Memory (Series B, Model 1)

A simplified schematic of the Memory circuit is shown in Fig. 3-6. Refer also to the Memory schematic at the back of this manual. The Gate Generator closes the Memory input gate diodes D342 and D343 at the correct time of each sampling cycle. The Memory circuit is a feedback amplifier (integrator) with input and feedback elements both capacitors. The input capacitor is C315, the feedback capacitor is C375. V353 is an input cathode follower, Q364 is the amplifier, and Q374 is an output emitter follower.

The input impedance at the grid of V353 acts as a virtual ground because as the input signal changes the grid voltage, the signal is amplified and applied back to the input as negative feedback to cancel the original change.

The action of the Memory is to transfer a charge from C315 to C375. The circuit between the Ac Amplifier output and the grid of V353 looks like 200 Ω and 510 pf in series (when the Memory gate is conducting). Thus, as a signal appears at the Ac Amplifier output, C315 is charged. C315 tries to couple the signal to the grid of V353, but feedback prevents the grid voltage from changing significantly; the result is for both C315 and C375 to receive a charge.

When the Memory gate is not conducting, the grid of V353 has a very high impedance to ground, and at this time the only possible discharge path for C375 is by V353 grid current or stray leakage current. The grid current and total leakage current is so low that there is essentially no change in the output voltage between samples even when sampling at the low rate of 150 times a second.

The circuit elements between C315 and the grid of V353 serve several purposes:

1. D330 and D332 are amplitude-limiting diodes. They normally do not conduct.

2. D324 is a 6-volt Zener to provide back-bias for the gating diodes D342 and D343.

3. The resistors all aid in setting the input quiescent voltage level.

4. T339 is a pulse transformer that allows rapid turn-on of the gating diodes to connect the input circuit to V353.

5. C325 assures that both sides of D324 follow the signal equally.

Within the Memory amplifier:

1. C365 corrects for transistor phase shift.

2. D362 is positive signal overload protection for Q364.

3. D372 assures that fast negative signals at the base of Q374 will be coupled to C375 and the output, even if Q374 is momentarily cut off.

4. The maximum positive swing of the output lead can be about +20 volts. The maximum negative output can be about —12 volts.

Between samples, the Ac Amplifier output returns to its quiescent level, and any C315 charge (that was gained at the last sample) is cancelled. At the next sample (if there is any change at the Preamplifier input), C315 will receive a new charge and can add to or subtract from the residual charge of C375. C315 is charged by the Ac Amplifier only when the memory gate is conducting.

System Operation With No Signal

Items to remember when examining signals at various points between the Preamplifier output and the Memory output:

1. It is impossible to install perfectly balanced sampling gate diodes, so at each Gate Generator pulse there will be some small error signal sent into the system.

2. The Memory circuit does not retain a perfectly stable output voltage because C375 cannot hold a charge permanently.

3. The Memory output is coupled back to the Preamplifier input (with proper attenuation).

4. Theoretically, if there is no input at the sampling gate, there will be no Ac Amplifier signal, and the Memory output will be zero. The Memory output will be essentially zero, but there will always be a small pulse at the Ac Amplifier output.

5. The SMOOTHING BALANCE control (R355) sets the quiescent dc level at the Memory input and if incorrectly adjusted will cause an offset voltage that looks like a continuous signal. For example, assume the SMOOTHING BALANCE control is off by +1 mv. If the Memory amplifier internal gain is 500 (it isn't actually), the Memory output will now be off by —500 mv. The —500-mv feedback to the input bridge creates an error signal which will drive the Memory output nearly back to zero. After several dots the Memory output will stabilize near zero, but slightly off from zero to provide enough error signal to correct for the original 1-mv error. Thus, a continuous minor error signal is amplified to place the output level near zero. If the Preamplifier gain is reduced by the SMOOTHING control, the Memory output must now be larger so the error signal fed into the Ac Amplifier is larger, restoring again the —1-mv correction at the Memory input. A trace shift seen when the SMOOTHING control is rotated is the increased Memory output to make up for the reduced amplifier gain. Thus, the Memory input balance control is called the SMOOTHING BALANCE because its effect is seen by rotation of the SMOOTHING control.

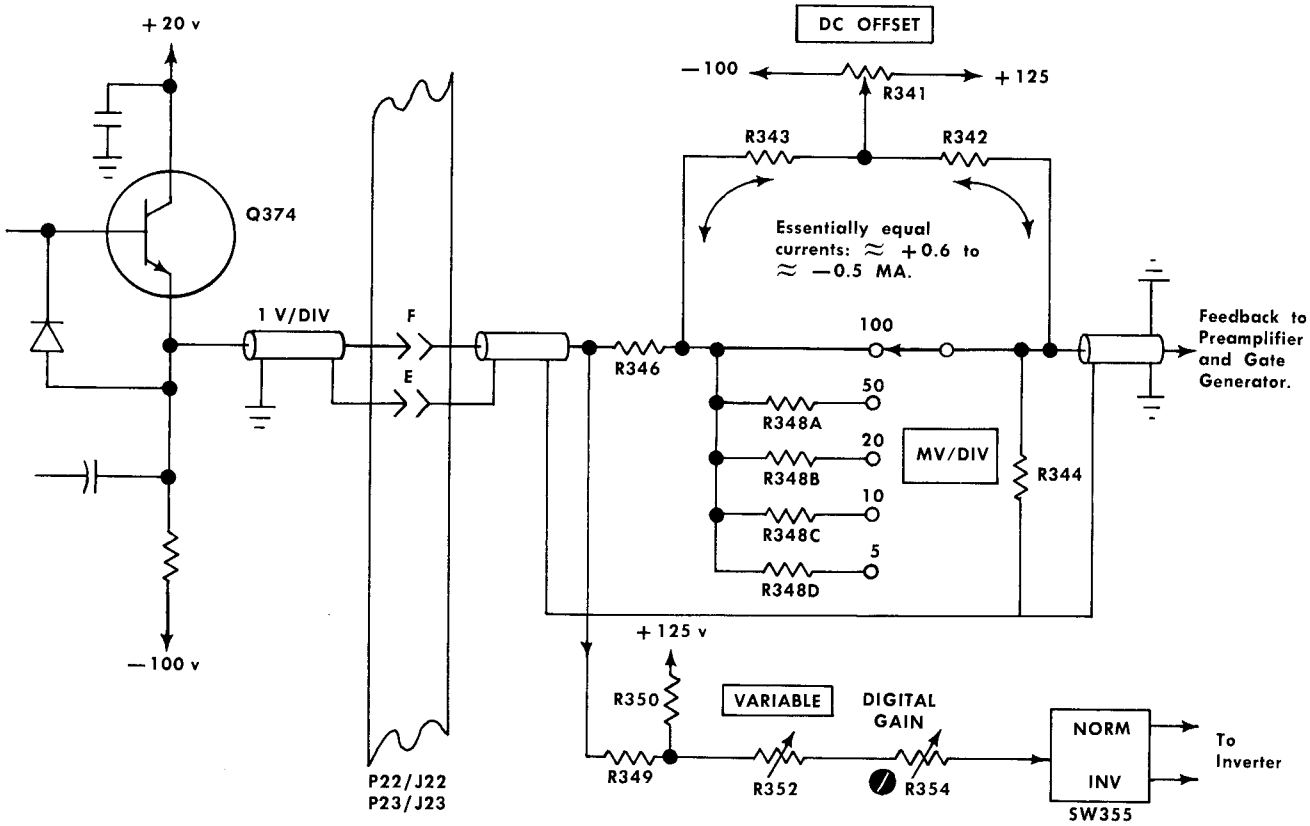

Fig. 3-7. DC OFFSET and MV/DIV circuit from Memory output to feedback and Inverter circuits.

DC Offset

The Memory output of Q374 is fed to the Inverter circuit. It is also fed to a voltage divider of the MV/DIV switch that controls the feedback signal sent to the Preamplifier and Gate Generator. The feedback attenuator resistors (R348, A through D, Attenuator Switching diagram), set the feedback amplitude to keep the basic Memory output at 1 volt/division while the feedback voltage just matches the input signal.

The Dc Offset circuit adds a dc shift to the feedback loop. It includes a current cancelling system that prevents offset current from flowing in R348; see Fig. 3-7. Rotating the DC OFFSET control from one end to the other causes equal currents to be injected at both sides of the MV/DIV feedback divider. The resulting voltage drop of ±0.5 volt across both R344 and R346 is the offset voltage sent to the Preamplifier and Gate Generator. The two points of offset injection assures there is essentially no offset current in R348 so that the offset system is not affected by changing the stetting of the MV/DIV switch.

The DC OFFSET control may be used to extend the range of the POSITION control for signals with a dc component up to ±0.5 volt.

Inverter (Series C, Model 1)

The Inverter includes two operational amplifiers for each channel. The function is to invert the display when the front-panel NORM-INV switch is in the INV position. When

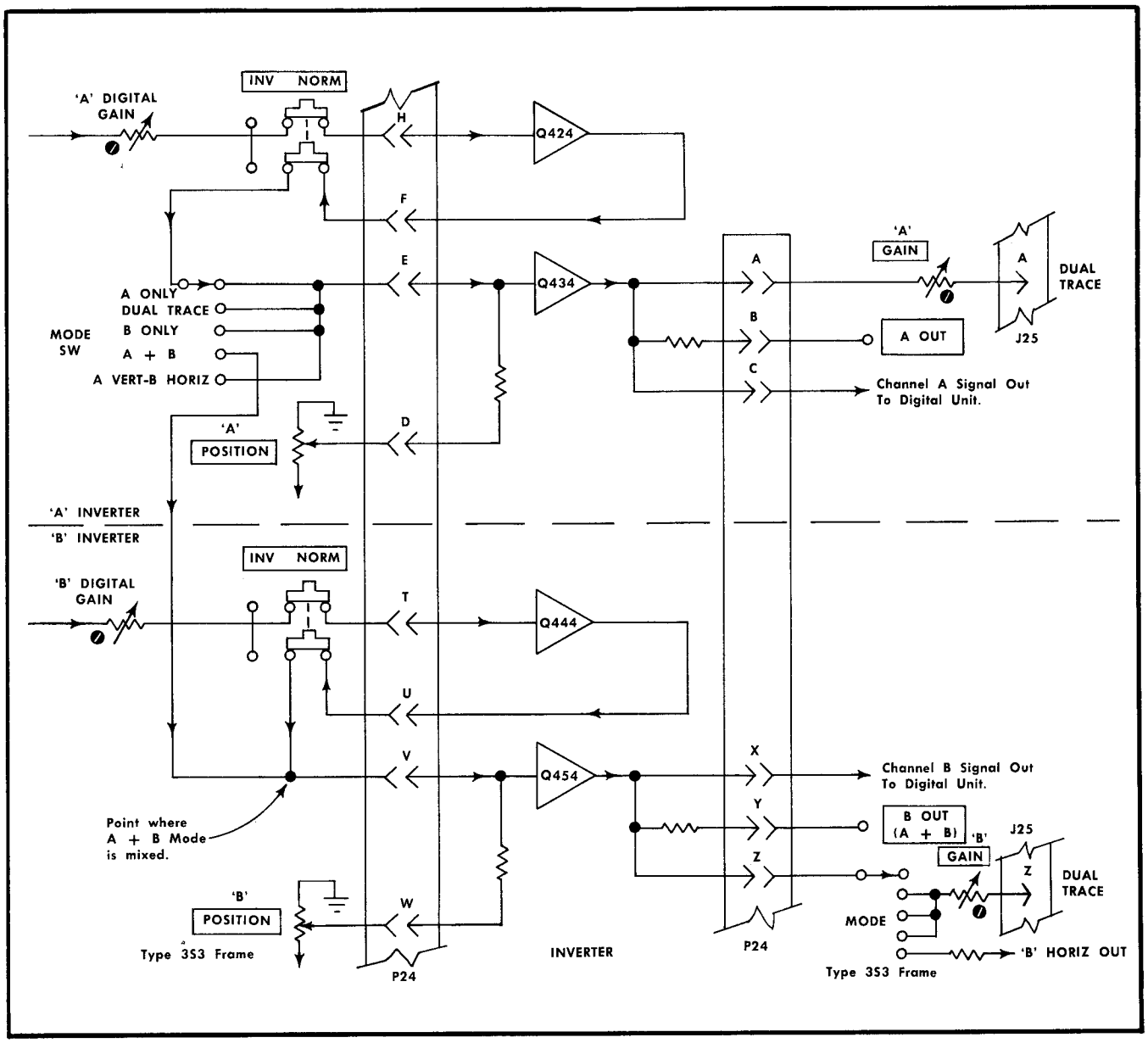

Fig. 3-8. Interconnections for Inverter subchassis.

the switch is in the NORM position, both amplifiers are used in cascade. Switching and interconnections are shown in Fig. 3-8 and on the Interconnector Diagram at the back of this manual.

Each amplifier has a current injection system at the transistor base for changing the dc level of the output signal. The INVERTER ZERO control is the current injection of the first amplifier. It is used to set the input and output voltage equal (essentially zero). As an example, Q424 collector rests at about +20 volts. Zener diode D424 lowers the voltage to near zero without attenuation. Then the INVERTER ZERO control injects a small current at the base of Q424 to alter the output voltage a bit to allow for variation in components and input voltage. Thus, the first amplifier can be switched in or out of the circuit without changing the vertical position of a centered display. The current injection of the second amplifier is the front-panel POSITION control. The output voltage of each second amplifier (Q434 and Q454) is at about +10 volts.

All four amplifiers are simple operational amplifiers. The gain is set by the ratio of the feedback resistance to the input resistance. Each stage has essentially 12.1 k input and feedback resistance. The signal input current is equal to the feedback current, and the base impedance of each transistor is then a virtual ground. Thus, the resistance of the current injection circuits just discussed does not affect the signal source impedance and therefore does not affect the stage gain.

The gain of the first amplifier (Q424 and Q444) may not be unity. The gain is set by the 12.5 k feedback resistor and the series value of R349 at the Memory output (1 k), R352 (VARIABLE control at CALIB, 10 k), and the DIGITAL GAIN control. The total of these three resistors will be between about 11k and about 13.5 k depending upon the Memory ouput at unity loop gain.

The gain of the second amplifier (Q434 and Q454) is unity when fed from the first amplifier. Channel A gain is set by R429 and R435. The gain of the second amplifier will be the same as the first amplifier when the NORM-INV switch is at INV because its source resistance is then the input system from the Memory.

The DIGITAL GAIN control allows setting the system gain, from the probe tip to the Inverter output, to the correct value for operation with a digital plug-in unit in the Type 567 Oscilloscope. It also affects the display amplitude, but the display amplitude is then adjusted to match the digital unit readout by the front-panel GAIN control.

Operational amplifiers can be used as signal adders. More than one input can be paralleled at the virtual ground base impedance of Q454. When the Mode switch is set to A + B, both channel signals enter the base of Q454 and are added. If one channel NORM-INV switch is at INV, then the signals subtract. Under this mode of operation, the Channel A POSITION control does not affect the display (see Fig. 3-8). Both switches operate, and the single-trace algebraic display is positioned by the Channel B POSITION control.

Output of both channel Inverters at Q434 and Q454 goes to three 10 k loads. They are the Dual Trace subchassis, the front-panel output terminal, and the digital unit. Each output can work into a very low impedance because the feedback within the operational amplifier makes its collector output impedance very low.

Dual Trace (Series D, Model 1)

The Dual Trace subchassis determines which channel is displayed, or that both are displayed. Because of the various modes of operation possible, both the A and B channels will be discussed.

The signal of both channels enter the emitter circuits of separate common-base stages Q514 and Q524 that have a single and shared collector load at the input to the Vertical Amplifier. Which channel is displayed is determined by the Mode switch and the conduction of Q545 or Q555. Q514 and Q524 always conduct the same current, and the signal is either passed to the Vertical Amplifier or bypassed to the clamping circuit of Q545 or Q555.

During single-channel displays (A ONLY, B ONLY, A + B or A VERT B HORIZ), only one clamping transistor conducts. Q555 conducts for the A ONLY and A VERT B HORIZ modes, Q545 conducts for the B ONLY and A + B modes, and Q545 and Q555 become a bistable multivibrator, triggered by Q570 for DUAL-TRACE operation.

The output voltages of the INVERTER subchassis rests at +10 volts and are 'modulated' by signal currents. Each Dual-Trace common-base stage has about 10 k between the Inverter and the emitter of the stage (front-panel GAIN control in series with R513). Thus, each common-base stage conducts 1 ma steady dc and 100 μa/div signal current. (Memory output is 1 volt/div; Inverter output is 1 volt/div into 10 k. Thus, signal current is 0.1 ma or 100 μa/div at the input to the common-base stages.)

Fig. 3-9 shows dc current flow paths for the common-base amplifiers for A ONLY operation. Voltages for A ONLY operation are included on the Dual Trace Schematic. The transistor for the channel not displayed, Q514 of Fig. 3-9, does not saturate when its output is channeled through D516. It must not saturate or dual-trace switching transients would be sent back to the Inverter and cause excessive display noise. The combined voltage drops across D557 (at the collector of Q555) and D516 assure that the collector valtage of Q514 will always be negative with respect to its base, therefore not saturated. B ONLY operation current flow is the reverse of that shown in Fig. 3-9.

Dual-Trace Operation

The Type 3S3 switches between channels at every sample when operated in the Dual-Trace mode. Q545 and Q555 operate as a nonsaturating bistable multivibrator that switches at the sampling rate. Basically its frequency is about 50 kc if the timing unit triggering signal is 100 kc or greater; less than 50 kc if the triggering signal is less than 100 kc.

The multivibrator is switched by triggers from the blanking oscillator Q570. The triggers are negative pulses from the grounded winding of T570, each time the blanking oscillator is triggered by the Gate Generator. The trigger pulses are ac coupled to the base of the off transistor (Q545 or Q555) to turn it on and cause the multivibrator to switch.

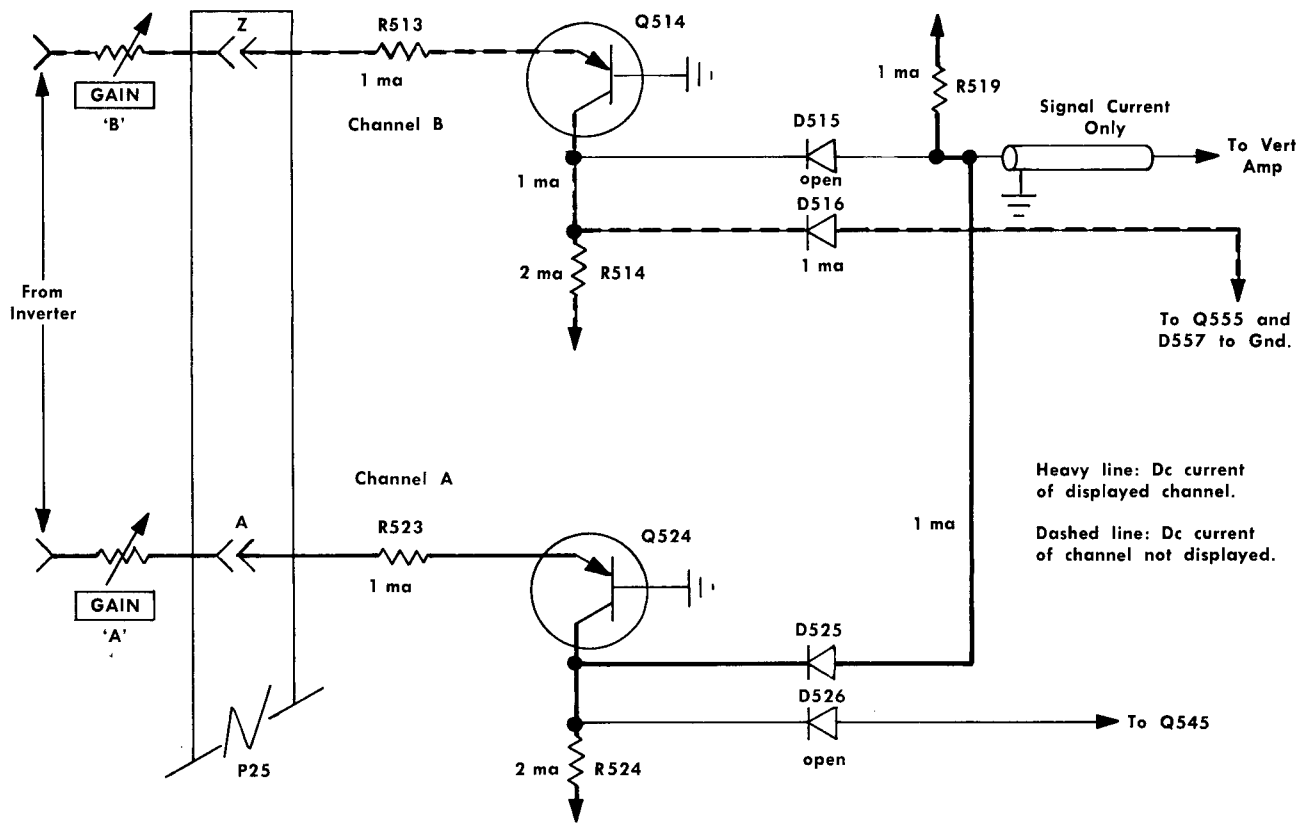

Fig. 3-9. Current flow of Dual Trace common base amplifiers for A ONLY operation.

Blanking Oscillator

The blanking oscillator is active in all modes of operation to blank the oscilloscope crt each time a sample is taken and the display dot is moved. Thus it serves well as the blanking system for Dual-Trace operation.

The blanking oscillator is triggered into conduction by the memory gate width circuit of the Gate Generator. The Gate Generator pulse does not last long enough to properly blank the crt so the blanking oscillator pulse lasts about 4 μsec.

Before Q570 is triggered it is cut off by about +0.2 volts at the base. The collector voltage is —38 volts. As the positive trigger pulse arrives, the following takes place.

1. The trigger is transformer coupled (and inverted) to the base to turn on Q570.

2. Regenerative blocking oscillator action follows and the transistor saturates.

3. As the trigger signal stops, the base of Q570 is negative due to stored charge in the emitter-base junction. R571 removes the stored charge slowly, allowing Q570 to come out of saturation slowly and prevent any back-swing of T570. Thus a steady blanking signal of about +38 volts is sent to the oscilloscope crt circuit.

4. At the time the trigger arrives, a sharp negative pulse is sent to the Dual-Trace multivibrator. If the MODE switch is at DUAL-TRACE, the multivibrator will switch states. Otherwise the trigger has no effect.

Digital Readout Channel Information

Digital Readout amplifier Q564 sends a +2-volt steady signal to the Digital Plug-In Unit when the Type 3S3 displays Channel A and a —1-volt steady signal when Channel B is displayed. It also switches at the Dual-Trace switching rate.

Vertical Amplifier (Series E, Model 1)

The Vertical Amplifier is composed of two operational amplifiers. The first, Q614, Q624 and Q634, has a gain of 110 volts output per ma input. The second, Q654, Q664, and Q674 has a voltage gain of —1.

The output voltage of the Dual Trace subchassis and the input of the Vertical Amplifier is set by the emitter voltage of Q614. The base of Q614 is the collector load for the two common-base dual-trace amplifiers.

The input circuit of Q614 includes a ÷5 TRACE FINDER push button. The Trace Finder switches the Dual-Trace output from a direct connection to the base of Q614, to a 5:1 resistive divider R607 and R608. Since both sides of the divider are at —12.2 volts, no dc current flows in the divider.

The input voltage level of the Vertical Amplifier is a combination of two silicon junction drops, D612 and the emitter-base junction of Q614. The Vertical Centering circuit, R610 and R611, set the current at the base of Q614 so that zero current from the Dual Trace circuit centers the trace. The current path is from the emitter of Q634, through R619, D612, and the Vertical Centering resistance. The total current with the trace centered is about 1.8 ma, enough to make the voltage drop across D612 equal and opposite the forward voltage drop of the emitter-base junction of Q614.

In making voltage measurements within the Vertical Amplifier, all but one (as listed in the schematics) remain very stable with a stable trace position. However, the voltage at the collector of Q614 drifts nearly 0.5 volt if the trace is moved from center to either the top or bottom of the graticule. The drift is due to a thermal change in D615, but since it is at the high-impedance collector of Q614, there is essentially no change in current drive to the emitter of Q624. The drift is normal and should not be considered.

The Vertical Amplifier push-pull output is about 185 volts peak-to-peak for 8 divisions of trace shift. The signal input current for 8 divisions of trace shift is slightly less than 1 ma.

SECTION 4
MAINTENANCE

PREVENTIVE MAINTENANCE

Calibration

The Type 3S3 Plug-In Unit will not require frequent calibration. However, to insure that the unit is operating properly at all times we suggest that you check the calibration after each 500-hour period of operation (or every six months if used intermittently). A complete step-by-step procedure for calibration of the unit and checking its operation is included in Section 5.

The accuracy of measurements made wth the Type 3S3/P6038 Probe system depends not only on the accuracy of calibration, but also on the calibration of the associated oscilloscope. It is important for the oscilloscope to be in proper calibration.

Visual Inspection

Trpube can sometimes be found by a visual inspection of the unit or probe. For this reason, make a thorough visual check each time the instrument is calibrated or repaired. Look for such defects as loose or broken connections, damaged connectors, improperly seated tubes, scorched or burned parts, broken terminal strips, etc. The remedy for these troubles is apparent, except for heat-damaged parts. Heat damage is often the result of other, less apparent trouble. It is essential for you to determine the cause of overheating before replacing damaged parts.

Tube or Transistor Checks

Tester checks on the tubes and transistors used in the Type 3S3 is not recommended. Tube testers sometimes indicate a tube to be defective when that tube is operating satisfactorily in a circuit, or they may fail to indicate tube defects which affect the performance of the circuits. The same applies to similar tests made on transistors. The criterion for useability of a tube or transistor is whether or not it works properly in the circuit. If it does not, then it should be replaced. Unnecessary replacement is not only expensive but may also require needless recalibration of the instrumnt.

COMPONENT REPLACEMENT

General Information

The procedures for replacing most parts in the Type 3S3 and P6038 Probe are easy. Detailed instructions for their removal are therefore not required. In some cases, however, additional information may help you. This information is contained in the following paragraphs. Because of the circuit configuration, it will be necessary to recalibrate portions of the circuit when certain parts are replaced. Refer to the Calibration section of this manual.

Removal of Subchassis Circuit Boards

Most of the Type 3S3 circuitry is located on subchassis circuit boards. Each subchassis has a 22-contact connector that mates with the main-frame cables. Maintenance is made easier by the use of a special subchassis extender and special extension cables that permit the unit to be operated outside of the oscilloscope (identified at the beginning of the calibration procedure). The Type 3S3 will operate correctly with any subchassis extended for testing.

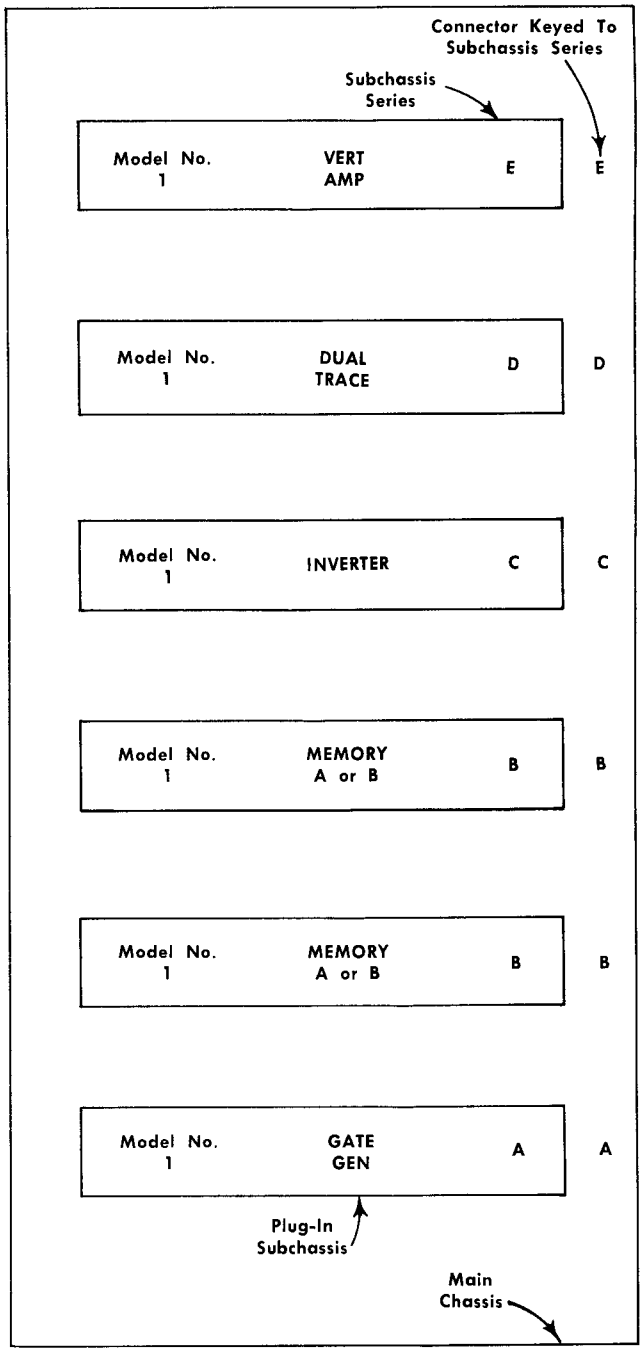

Fig. 4-1. Subchassis location guide.

Removal of a subchassis is accomplished by pressing sideways on the two tabs located at each side of the unit being removed. The removal tabs apply lifting pressure to the guides, aiding in disconnecting it from the interconnecting socket.

When installing a subchassis, note the letter located just to the right (front panel facing you) of the interconnecting socket that identifies which subchassis will operate in that location. The letter is identified on each schematic as a "series" letter (the Gate Generator is "Series A"). The series letter is both a circuit guide and a physical position guide, and mates with a letter on the top lip of each subchassis. See Fig. 4-1.

To replace a subchassis, apply heavy hand pressure to push the unit fully into position. Take care not to rotate small screwdriver adjustments, as that will change the calibration.

Switches

Procedures for the removal of defective switches are, for the most part, obvious and only a normal amount of care is required. If a switch is removed, careful notation of the leads to the switch should be made to facilitate connecting the new switch.

Single wafers are not normally replaced on the switches used in the Type 3S3. If one wafer is defective, the entire switch should be replaced. Switches may be ordered from Tektronix either unwired or with the parts wired in place.

Soldering Precautions

In the production of Tektronix instruments a special silver-bearing solder is used to establish a bond to the ceramic terminal strips. This bond may be broken by repeated use of ordinary tin-lead solder, or by excessive heating of the terminal strip with a soldering iron. Occasional use of ordinary 60-40 solder will not break the bond unless excessive heat is applied.

If you are responsible for the maintenance of Tektronix instruments, it is advisable to have a stock of solder containing about 3% silver. This type of solder is generally available locally, or it may be purchased from Tektronix in one-pound rolls; order by part number 251-514.

Because of the shape of the terminals of the ceramic terminal strips, we recommend a small wedge-shaped tip on your soldering iron. These tips allow you to apply heat directly to the solder in the terminals. It is important to use as little heat as possible while producing a full-flow joint.

The proper technique for soldering components in place requires: (1) use of long-nose pliers to hold the lead securely between the component and the point where heat is applied, allowing the pliers to serve as a heat sink; (2) use of a hot iron for a short time; and (3) careful manipulation of the leads to prevent breakage. Use a 50-to70-watt iron when working on ceramic strips.

Ceramic Terminal Strips

Damaged ceramic terminal strips are most easily removed by unsoldering all connections, then knocking the plastic yokes out of the chassis. This can be done by using a plastic or hard-rubber mallet to hit the ends of the yoke protruding through the chassis. If space limitations prohibit use of the mallet directly, a plastic rod can be used between the mallet and the yoke of the strip. When the two yokes supporting the strip have been knocked out of the chassis, the strip and yokes can be removed as a unit. The spacers will probably come out with the yokes; if not, they can be removed separately.

Another way of removing the terminal strip is to cut off the side of the yoke holding the strip with diagonal cutters. This permits the strip to be removed from a difficult area where a mallet cannot be used. The remainder of the yokes and the spacers can be pulled out separately. Since a replacement strip is supplied with yokes already attached, the old yokes need not be salvaged. However, the old spacers can probably be used again.

When the damaged strip and yoke assembly has been removed, place the spacers into the holes in the chassis. Then set the ends of the yoke pins into the spacers. Press or tap lightly directly above the yokes to drive the yoke pins down through the spacers. Be certain that the yoke pins are driven completely through the spacers. Then cut off the portion of the yoke pin protruding past the spacers. (See Fig. 4-2.)

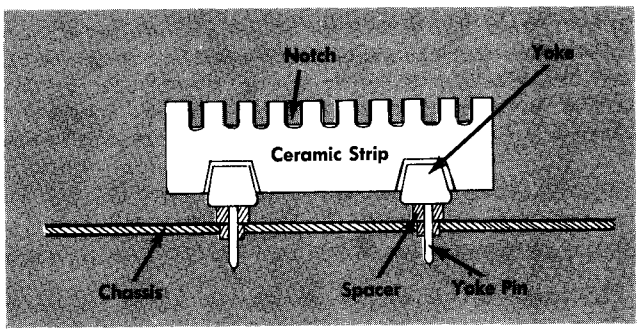

Fig. 4-2. Ceramic strip assembly.

P6038 Probe

The P6038 Probe may need inspection if it is dropped or has otherwise been damaged. To inspect a probe, grasp the cable strain-relief about 3/4 inch from the probe body, and rotate the probe body counterclockwise to remove it. About six complete turns will free the securing threads and allow the body to be withdrawn off the tip end.

The cable strain relief boot should not be forced back from its normal position, as a special tool is required to reinstall it.

The sampling gate diodes are snapped in place. If the probe has been dropped, one or more of the diodes may have slipped out of one of its clips. Fig. 4-3 shows the proper location of the diodes and their polarity. Replace a diode in its clips by applying pressure on the lead, not on the ceramic body. (Diodes can be broken by finger pressure on the body).

In the event a diode requires replacement, a selected set of four diodes is available by ordering Tektronix Part No. 152-144. The diodes come as two pairs. Each pair is to be

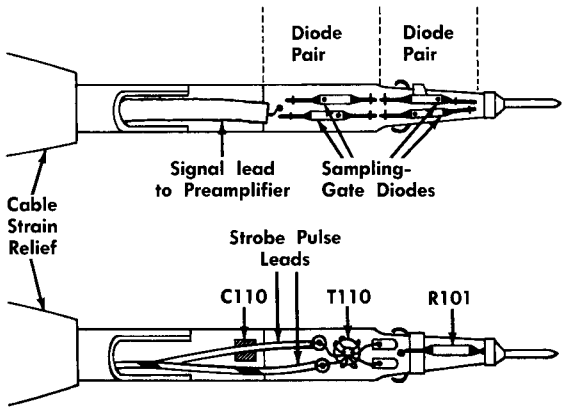

Fig. 4-3. Inside views of P6038 Probe.

placed side-by-side, either at the tip end, or at the cable end. Do not mix diode locations or diode sets. Diode set replacement requires complete recalibration.

If any other probe parts require replacement, send the probe to your nearest Tektronix Field Repair Center. Do not attempt any soldering, as a special positioning jig is required to set proper tolerance.

To replace the probe body, take care that the threads do not rub against any components or the cable foam; then reverse the above removal procedure. Gentle handling is important; the P6038 Probe is not intended for rugged use.

TROUBLESHOOTING

General Information

The Type 3S3 derives all of its operating voltages from the oscilloscope, and depends on the oscilloscope and the Timing Unit for its display. You must be sure that the oscilloscope is not the cause of trouble.

If trouble occurs in the Type 3S3, try to isolate it by quick operational and visual checks. First check the settings of all controls. Then operate the controls to see what effects if any, they have on the trouble. The normal or abnormal operation of each control may help you to establish a trouble symptom. (The cause of trouble which occurs only in certain positions of a control can usually be determined immediately from the trouble symptoms.)

After the trouble symptoms are established, look first for simple causes of trouble. Check to see that the pilot light of the oscilloscope is on, feel for any irregularities in the operation of the controls, listen for any unusual sound, see that the tube heaters are lit, check all power supply voltages, and visually check the entire instrument. The type of trouble will generally indicate the checks to make.

In general, a troubleshooting procedure consists of two parts: circuit isolation and circuit troubleshooting. Since the Type 3S3 is a complex unit, consisting of many circuits, you should study each schematic carefully while reading the circuit description to help determine which circuit is defective. After isolating the circuit, you can then troubleshoot in the circuit to find the cause of the trouble.

Most troubles will be caused by tube or semiconductor failures. Therefore, when trouble has been isolated to a circuit, the tubes and/or semiconductors in that circuit should be checked first. Be sure to return tubes and transistors found to be good to their original sockets.

If replacing Q214 (Gate Generator), or Q570 (Dual Trace) use all four pins of the transistor so the case is grounded.

Switch wafers shown on the schematics are coded to indicate the position of the wafer on the switches. The number portion of the code refers to the wafer number on the switch assembly. Wafers are numbered from the front of the switch to the rear. The letters F and R indicate whether the front or the rear of the wafer is used to perform the particular switching function.

Trouble Symptoms

1. A display that may appear as trouble to someone not familiar with sampling techniques can occur when triggering information stops arriving from the Timing Unit. Each display dot is the result of a pulse from the Timing Unit arriving at the Type 3S3 Gate Generator. If the information stops—even in the middle of a trace—sampling stops immediately. The spot does not extinguish, but it stops progressing across the crt horizontally and starts drifting up or down the crt and ultimately goes out of sight. This is normal, and is not to be confused with trouble. (It is the Memory drifting, without repeated correction.) Should the Timing Unit information begin again, the dot will return to the crt and the interrupted trace will be completed.

2. If the display appears to compress—or limit—at one end of the POSITION control range, set the DC OFFSET control to a position that allows operation with the POSITION control nearer its midrange. Then reduce the input signal to 1 volt or less, peak-to-peak. If the symptom continues, recalibration of the Type 3S3 is necessary.

3. If the dots are spread all over the crt, the SMOOTHING control is too far clockwise and the system loop gain is much greater than unity. Turn the SMOOTHING control counterclockwise.

Testing Precaution

When observing waveforms in the Type 3S3 circuitry, always make certain that the test oscilloscope frame is connected to the Type 3S3 frame. Then if you wish to look at fast pulses inside the Type 3S3 circuits that are differential in nature, observe the following. The Tektronix P6034 and P6035 signal probes, used on one sampling system to observe another (such as with a Type 3S76 or Type 661/4S1), can be used in a differential fashion singly. If the circuit being measured is not at ground potential, both the probe center conductor and ground return must be ac-coupled. The center conductor can be ac-coupled using a General Radio Type 874-K in-line capacitor. The ground return can be ac-coupled (for fast signals) by use of a 0.001-μf capacitor at the probe ground clip. Use short leads. If the test oscilloscope frame is not connected to the Type 3S3 frame, 60-cycle stray pickup between the chassis can damage components in the Type 3S3.

Circuit Isolation Technique

If one channel of the Type 3S3 has no trace but the other channel operates, or if there is a trace but no signal displayed, the following circuit isolation procedure may be of help.

Use a 15-mc bandwidth (or greater) test oscilloscope, such as a Tektronix Type 530A- or 540-Series with Type H or L Plug-In Unit and a 10X Probe.

1. Set the test oscilloscope controls:

TRIGGERING MODE	AC
TRIGGER SLOPE	—INT (Fig. 4-4), +INT (Fig. 4-5)
TIME/CM	0.5 μsec/cm
VOLTS/CM	As in Figs. 4-4 and 4-5

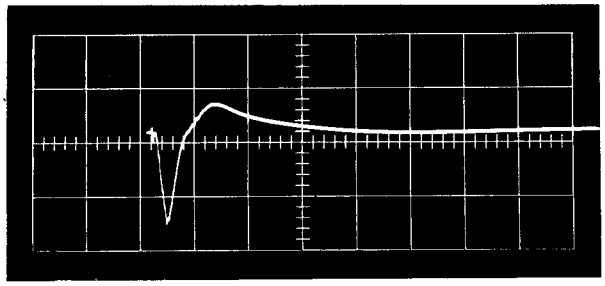

0.5 μsec/cm. 1 v/cm.

Fig. 4-4. Ac Amplifier output with conditions described in text.

2. Connect the two extension cables listed at the beginning of the calibration procedure to operate the Type 3S3 outside the oscilloscope.

3. Place the Memory subchassis of the channel with trouble on a subchassis extender board and turn on the oscilloscope.

4. Set the Type 3S3 controls:

MV/DIV	10
POSITION	Centered
DC OFFSET	Centered
Noise-Risetime	FAST RT
SMOOTHING	Counterclockwise

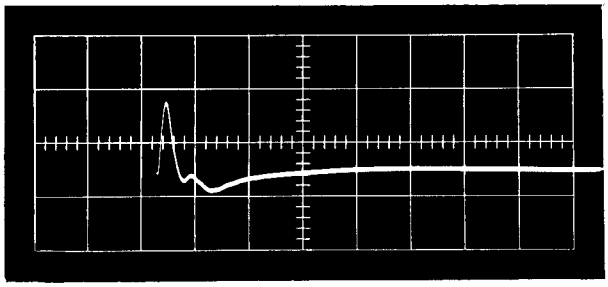

0.5 μsec/cm 0.2 v/cm

Fig. 4-5. Preamplifier output with conditions described in text.

5. Place the P6038 Probe of the problem channel into a 50 Ω environment.

6. Free run the Timing Unit at 10 nsec/div and 100 dots/div.

7. Set the NORM-INV switch midway between positions. If the trace does not appear the trouble is after the switch. If the trace appears, the trouble is before the switch. Set the switch to NORM and finish this procedure.

8. Short the feedback loop to ground with a short clip lead at terminal B (for Channel A) or terminal W (for Channel B) of J21. The trace should leave the crt. Grounding the feedback loop permits isolation of a problem circuit in front of the Memory.

9. Connect the test oscilloscope 10X Probe ground clip to the ground side of the LOOP GAIN control R313 (NOT to the chassis), and the probe tip to the junction of R315 and C315. Connecting the probe in any other way can cause the Ac Amplifier to oscillate. The test oscilloscope display will now be that of the Ac Amplifier output. If there is no trouble up to this point, the display will be similar to Fig. 4-4, but not necessarily the same amplitude or polarity. If there is trouble in the Ac Amplifier, there will be no signal.

Adjustment of the RISETIME BAL control should alter or even invert the polarity of the display. Note the position of the RISETIME BAL control and restore it. If the RISETIME BAL control does not change the display, the trouble is after the Ac Amplifier.

10. If there is no pulse in step 9, move the test oscilloscope probe to the Preamplifier output. Connect the probe ground clip to the chassis of the Preamplifier shield and the tip to the output side of C123 (Channel A) or C153 (Channel B).

If there is a pulse similar to Fig. 4-5, and it can be altered in the same manner as the Ac Amplifier pulse was altered in step 9, the trouble is not in the Preamplifier.

11. If the circuits up to the Memory Gate input are working, dc couple the test oscilloscope to the Memory output, terminal F of J22 for Channel A and terminal F of J23 for Channel B.

Set the test oscilloscope for a free-running sweep at 0.5 μsec/cm and the vertical deflection for 10 volts/cm. If the Memory output can be made to go through zero volts (with the RISETIME BAL control), and there is still no trace for the sampling system, the trouble is after the Memory. If the Memory output is locked at either +20 or —12 volts, the trouble is in the Memory.

The test oscilloscope can be made to display a sampled display if the Memory is operating properly. Externally trigger the test oscilloscope at a slow sweep rate. If the Type 3S3 controls can be made to display a signal on the test oscilloscope, the trouble is in the Inverter, Dual Trace, or Vertical Amplifier, and each can be checked by normal signal tracing methods.

RESISTOR CODING

The Type 3S3 uses a number of very stable metal film resistors identified by their gray background color and color coding.

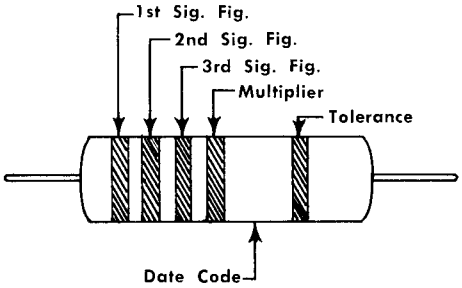

Fig. 4-6. Standard EIA color code for metal film resistors.

If the resistor has three significant figures with a multiplier, the resistor will be EIA color coded. If it has four significant figures with a multiplier, the value will be printed on the resistor. For example, a 333 k resistor will be color coded, but a 333.5 k resistor will have its value printed on.

The color coding sequence is shown in Fig. 4-6, and Table 4-1.

TABLE 4-1

Color Code Sequence

COLOR	1ST SIG. FIG.	2ND SIG. FIG.	3RD SIG. FIG.	MULTIPLIER	(±) % TOLER-ANCE
Black	0	0	0	1	—
Brown	1	1	1	10	1
Red	2	2	2	100	2
Orange	3	3	3	1,000	—
Yellow	4	4	4	10,000	—
Green	5	5	5	100,000	0.50
Blue	6	6	6	1,000,000	0.25
Violet	7	7	7	10,000,000	0.10
Grey	8	8	8	100,000,000	0.05
White	9	9	9	1,000,000,000	—
Gold				0.1	5
Silver				0.01	—
No Color					10

NOTES

SECTION 5
CALIBRATION

Introduction

The following paragraphs outline a procedure for calibrating the Type 3S3. The instrument should not require frequent recalibration, but occasional adjustments will be necessary when tubes and other components are changed. Also, a periodic recalibration is desirable from the standpoint of preventive maintenance.

Apparent troubles in the instrument are occasionally the result of improper calibration of one or more circuits. Consequently, calibration checks should be an integral part of any troubleshooting procedure. Abnormal indications occurring during calibration checks will often aid in isolating troubles to a definite circuit or stage.

In the instructions that follow, the steps are arranged in the proper sequence for a complete calibration of the instrument. Each numbered step contains the information required to make one check or adjustment or a series of related checks or adjustments. The steps are arranged to avoid unnecessary repetition of checks or adjustments.

EQUIPMENT REQUIRED

The following equipment is required to perform a complete calibration of the Type 3S3 with P6038 Probes.

1. A calibrated oscilloscope, preferably a Type 567 with a calibrated Type 3T77 Sampling Sweep Unit and a Type 6R1 Digital Unit. If a Type 567 is not available, a Type 561A or 564 (with a Type 3T77) may be used.

2. A precision voltmeter with an accuracy of at least 0.2% at 0.6 volt.

3. A 20,000 Ω/volt voltmeter.

4. An ohmmeter.

5. Two flexible special interconnecting cables to go between the Type 3S3 and the oscilloscope power connectors. Tektronix Part No. 012-066.

6. A Tektronix Type 110 Pulse Generator and Trigger Takeoff System or equivalent.

7. A Tektronix Type 113 Delay Cable or equivalent.

8. A signal generator capable of delivering either square waves or sine waves. Square waves at 1 mc, sine waves at 50 mc, at least 10 volts peak-to-peak into 50 ohms. Tektronix Type 105 Square Wave Generator, or Type 190 Constant Amplitude Signal Generator recommended.

9. Two 50 Ω coax cables, RG-8A/U, with GR connectors, 10-nsec signal delay. Tektronix Part No. 017-501.

10. A 50 Ω coax cable, RG-8A/U, with GR connectors, 5-nsec signal delay. Tektronix Part No. 017-502.

11. A 50 Ω coax cable, RG-58A/U, with GR connectors, 2-nsec signal delay. Tektronix Part No. 017-505.

12. Two nonterminating GR-To-P6038 Adapters. Tektronix Part No. 017-076.

13. A GR-To-BNC Adapter. Tektronix Part No. 017-065.

14. Two 50 Ω 2X attenuators with GR connectors, such as Tektronix 2XT Attenuator, Part No. 017-046.

15. A 50 Ω 10X attenuator with GR connectors, such as Tektronix 10XT Attenuator, Part No. 017-044.

16. A 50 Ω end-line termination with GR connector, such as Tektronix 50 Ω End-Line Termination, Part No. 017-047.

17. A GR-T, 50 Ω coax Tee. Tektronix Part No. 017-069.

18. A GR-To-UHF Adapter, for use with the signal generator, Tektronix Part No. 017-021.

19. An insulated, small-bit screwdriver, for making adjustments.

20. A 5 k potentiometer.

21. A 1 k, 1-watt, 20% resistor.

22. A clip lead about 2½ feet long.

23. A simple switch for use as shown in Fig. 5-5.

24. In case of electrical troubles: A test oscilloscope with at least a 15-mc bandwidth, such as Tektronix Type 530A- or 540-Series, with Type H or L Plug-In Unit. A 10X Attenuator Probe, such as the Tektronix P6000 or P6006. A special (Type 3S3) subchassis extender board, Tektronix Part No. 012-069.

25. In case of calibration with a new P6038 Probe: A 50-watt soldering iron with ⅛ inch tip, some plain 60-40 solder, and a pair of needle-nose pliers.

PRELIMINARY PROCEDURE

Make a complete visual check of the instrument. If calibration is being done as a result of trouble, check for correct transistors, tubes, and sampler diodes, and that they are in their correct locations. P6038 sampler diodes have a red dot on their cathode end (see Fig. 4-2). Memory gate diodes have a red dot at their cathode end also. If replacing Q214 or Q570, check that all four leads are plugged into the socket.

Use an ohmmeter to check the resistance of each interconnecting plug lead to ground, as shown in Tables 5-1 and 5-2. The probes are not connected for resistance measurements.

Set the Type 3S3 front-panel controls as follows before making the resistance measurements:

MV/DIV	100
POSITION	Midrange
DC OFFSET	Midrange (5 turns from one end)
NORM-INV	NORM
Mode	A ONLY
SMOOTHING	Clockwise
Noise-Risetime	FAST RT
GAIN	Midrange

TABLE 5-1

Resistance to ground at power connector P11 (Horizontal connector). All subchassis in place.

Pin No.	Circuit	Ohmmeter Range	Res.
1	open	X100 k	inf.
2	open	X100 k	inf.
3	open	X100 k	inf.
4	open	X100 k	inf.
5	ground	X10	0
6	open	X100 k	inf.
7	open	X100 k	inf.
8	open	X100 k	inf.
9	ground	X10	0
10	+300 v	X1 k	10 k
11	(B) HORIZ	X10	0
12	Lissajous switch	X10 k	50 k
13	open	X100 k	inf.
14	open	X100 k	inf.
15	+125 v	X1 k	3.5 k-4 k
16	—12.2 v	X10	5 Ω
17	Lower CRT	X1 k	5 k-13 k
18	Timing Unit Trigger In	X100	270 Ω
19	braid for 18	X100 k	0
20	+125 v	X1 k	3.5 k-4 k
21	Upper CRT	X10 k	5 k-13 k
22	ground	X100 k	0
23	—100 v	X1 k	2.5 k
24	Blanking	X1 k	6 k

After making resistance measurements, connect the Type 3S3 to the oscilloscope with the two flexible extension cables. Connect the P6038 Probes to the correct PROBE A and PROBE B connectors. Set the oscilloscope intensity control at about 2 o'clock. Turn on the power and let the system warm up for five minutes.

CALIBRATION

Calibration With Original P6038 Probes

Set the Type 3S3 controls as in the Preliminary Procedure. Set the Type 3T77 controls as follows:

POSITION	Midrange
DOTS/DIV.	100
HORIZ. MAG.	X1
TIME/DIV.	5 nSEC
VARIABLE	CALIB.
DELAY	Fully counterclockwise
TRIGGER SENSITIVITY	Clockwise to free run
RECOVERY TIME	Fully counterclockwise
SWEEP MODE	NORMAL
Trigger Source	+EXT.

TABLE 5-2

Resistance to ground at P2, all subchassis in place.

Pin No.	Circuit	Ohmmeter Range	Res.
1	CH 'A' Sig Out	X1 k	2 k-6 k
2	Open	X100 k	inf.
3	CH 'B' Sig Out	X1 k	2 k-6 k
4	Open	X100 k	inf.
5	CH 'B' Dec. Unit Gnd	X100 k	inf.
6	CH 'A' Dec. Unit Gnd	X100 k	inf.
7	Dec. 5	X100 k	inf.
8	Dec. 4	X100 k	inf.
9	open	X100 k	inf.
10	open	X100 k	inf.
11	CH 'A' Switch Pulse	X1 k	1 k
12	open	X100 k	inf.
13	'V' Units	X100 k	inf.
14	open	X100 k	inf.
15	'M' Units	X100 k	inf.
16	open	X100 k	inf.
17	open	X100 k	inf.
18	open	X100 k	inf.
19	open	X100 k	inf.
20	CH 'B' ÷ 1, 2, 5, Gnd	X100 k	inf.
21	CH 'A' ÷ 1, 2, 5, Gnd	X100 k	inf.
22	÷ 5	X100 k	inf.
23	÷ 2	X100 k	inf.
24	÷ 1	X100 k	inf.

1. Initial Balance

a. Connect the Channel A P6038 Probe into the 50 Ω system of Fig. 5-1.

b. Center the trace with the POSITION control. If the trace is off screen, push the TRACE FINDER button about half way in, so it is obvious the switch is between contacts. Adjust the VERT CENTERING control (R611), on the Vertical Amplifier subchassis so the trace

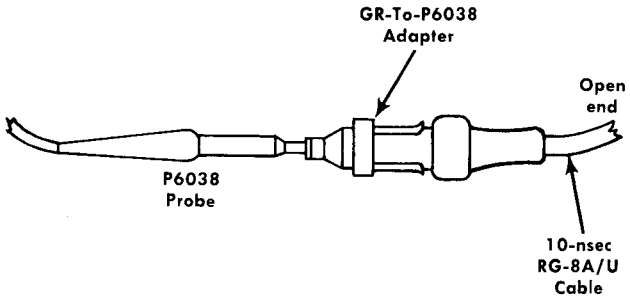

Fig. 5-1. P6038 Probe tip in 50-ohm system.

is at the graticule centerline. Release the TRACE FINDER button. If the trace is still off screen, push the TRACE FINDER button all the way in and bring the trace to the graticule centerline by adjusting the BRIDGE BAL control (R185) and/or the RISETIME BAL control (R175), on the Gate Generator subchassis.

c. Short the crt vertical deflection plates together with a screwdriver at the crt. (Be careful not to ground them to the crt shield.) Note the trace vertical position. Push the TRACE FINDER button half way in and adjust the VERT CENTERING control to place the trace at the vertical position noted when shorting the crt plates.

d. Use the 20,000 Ω/volt meter, and set the DC OFFSET control for +12 volts at the rear contact (slider) of the control.

The DC OFFSET control must stay at this position through step 3.

e. Adjust the SMOOTHING BALANCE control (R335) on the A Memory subchassis while turning the front-panel SMOOTHING control back and forth. The SMOOTHING BALANCE control is correctly set when the trace moves no more than about 0.3 division vertically as the SMOOTHING control is turned from one end to the other (Noise-Risetime switch at FAST RT).

f. Repeat for Channel B. Then let the instrument warm up for another 10 minutes before making further adjustments.

2. Vertical Balance

a. Set the Type 3S3 controls:

SMOOTHING	Fully clockwise
Noise-Risetime	LOW NOISE
POSITION	Midrange
MV/DIV	100
VARIABLE	CALIB
NORM-INV	NORM
Mode	A ONLY
DC OFFSET	As set in step 1
A BRIDGE VOLTS (on Gate Generator subchassis)	Midrange

b. Continue to free run the Timing Unit sweep.

c. Place the Channel A P6038 Probe into the 50 Ω environment of Fig. 5-1.

d. Set the Noise-Riseime switch to FAST RT and adjust the RISETIME BAL control (R175) for no trace shift when operating the Noise-Risetime switch between its two positions. (The trace position will not necessarily be at the graticule center.)

e. Set the MV/DIV switch to 20. Adjust the BRIDGE BAL control (R185) for no trace shift when operating the Noise-Risetime switch between its two positions. You may adjust the POSITION control to keep the display on the crt.

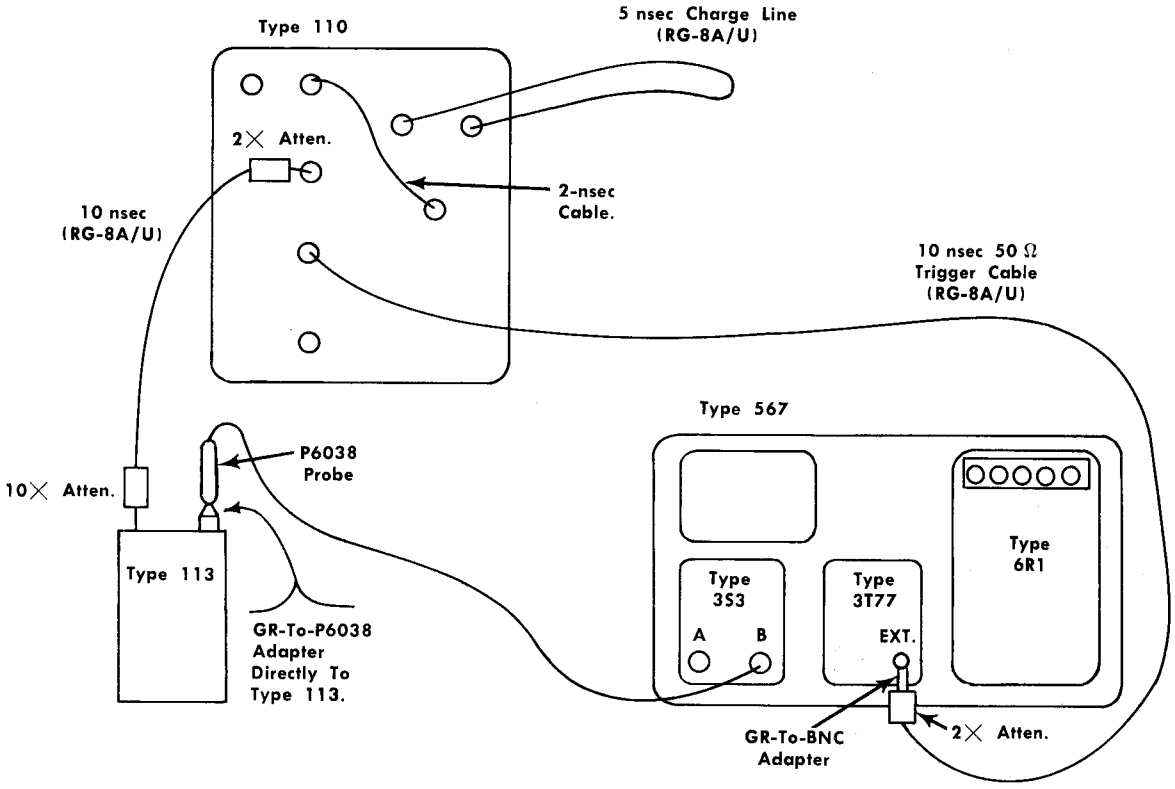

Fig. 5-2. Type 110, Type 113 system for setting risetime.

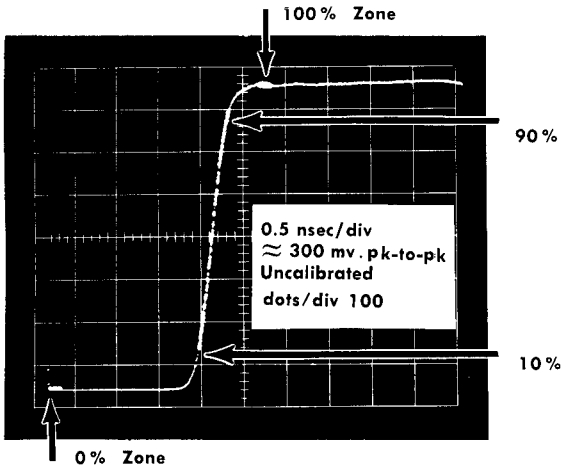

Fig. 5-3. Risetime measurement using a Type 6R1 Digital Unit.

f. Repeat step 2 (d) with the MV/DIV switch at 20.

g. Repeat step 2 (e).

h. Repeat steps 2 (a) through 2 (g) for Channel B. Leave the probe as connected for step 3.

3. Inverter Zero Adjustment

a. Step 2 must be completed before doing this step.

b. Set Channel B NORM-INV switch to NORM and adjust the B INVERTER ZERO control (R441) so the trace is at the same position as when the NORM-INV switch is at INV. Operate the NORM-INV switch back and forth to be certain the B INVERTER ZERO control is properly adjusted.

c. Repeat for Channel A.

4A. Set Channel B Risetime—With Digital Unit

NOTE

Do not use the subchassis extender in this step.

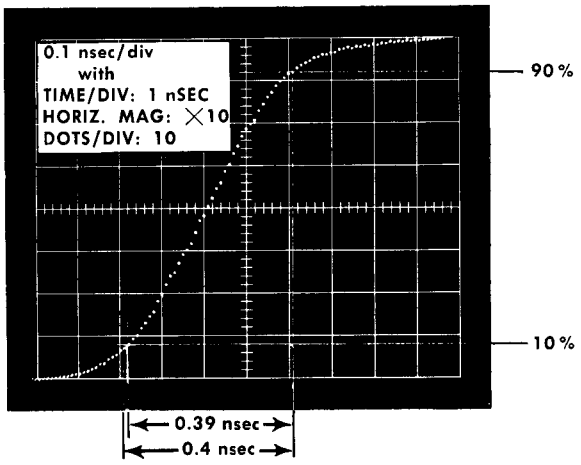

Fig 5-4. Visual risetime measurement without a Digital Unit.

a. Set up the Type 110, Type 113 system as in Fig. 5-2.

b. Set the Type 110 controls:

TAKEOFF-EXT. 50 Ω	TAKEOFF
ATTENUATOR	÷1
INVERTER	+1
AMPLIFIER 1 and 2	X1 each
Output Selector	EXT. OUTPUT
VOLTAGE RANGE	5.0
AMPLITUDE	30
PULSE POLARITY	+
PULSE GENERATOR	ON

c. Set the Type 6R1 Digital Unit controls:

START SLOPE	FIRST +
TIMING START	B TRACE 10%
STOP SLOPE	FIRST +
TIMING STOP	B TRACE 90%
MODE	TIME
RESOLUTION	LO
DISPLAY TIME	Clockwise
CRT DISPLAY	B 100% ZONE SET (Fig. 5-3)

d. Set the Type 3S3 controls:

Mode	B ONLY
MV/DIV	50
VARIABLE	CALIB
Noise-Risetime	FAST RT
SMOOTHING	Fully Counterclockwise
POSITION	Midrange
DC OFFSET	Center display

e. Set the Type 3T77 for an externally triggered display at 0.5 nsec/div. Adjust the Type 3S3 SNAP-OFF CURRENT control (R205) so the digital readout is 0.39 NS.

f. Set the Type 6R1 RESOLUTION switch to HI and the DISPLAY TIME control to midrange. After ten sweeps, the Type 6R1 readout will be the average of the ten sweeps. Set the Type 3S3 SNAP-OFF CURRENT control so the readout is between 0.394 and 0.402 NS.

The adjustment just completed gives the Type 3S3-P6038 a risetime slightly less than 0.35 nsec when the probe is driven from a pulse generator with a risetime of 50 psec or less.

4B. Set Channel B Risetime—Without A Digital Unit

NOTE

Do not use the subchassis extender in this step.

a. Set up the Type 110 pulser system and the Type 3S3 as in step 4A.

b. Set the Type 3T77 for an externally triggered display of 0.1 nsec/div by setting the TIME/DIV. switch to 1 nSEC and the HORIZ. MAG. to X10. The display should be similar to Fig. 5-4.

c. Adjust the Type 3S3 VARIABLE control until the display is 8 vertical divisions.

d. Adjust the Type 3S3 SNAP-OFF CURRENT control (R205) until the display risetime is between 0.39 and 0.40 nsec, 10% to 90%.

5. Memory Gate Width and Loop Gain Adjustment

a. Leave the system as connected. Do this step through (d) on Channel B only.

b. Set the Type 3T77 controls for an externally triggered display at 1 nsec/div, X1 magnifier, and 10 dots/div. The display should have about 5 to 7 dots in the pulse rise.

c. Check that the Type 3S3 Noise-Risetime switch is at FAST RT and the SMOOTHING control is fully counterclockwise.

d. Slowly adjust the MEMORY GATE WIDTH control (R215) until the vertical distance between pulse-rise dots is maximum. The adjustment for maximum distance between dots may not coincide with maximum pulse amplitude; disregard pulse amplitude and adjust R215 watching the pulse rise only. If two maximums occur, set the control at the maximum that occurs nearest the counterclockwise end of rotation.

e. Set the Type 3T77 for 2 nsec/div and 10 dots/div.

f. Adjust the LOOP GAIN control on the B Memory subchassis for unity loop gain, so the pulse rise looks the same at both 10 and 100 dots/div.

g. Connect the Channel A P6038 Probe to display the Type 110 pulse as was just done with Channel B.

h. Adjust the LOOP GAIN control on the A Memory subchassis for unity loop gain. Set the Type 3T77 for 100 dots/div.

i. Set the system up as at the beginning of step 1. Repeat the SMOOTHING BALANCE adjusments of step 1 (e) and 1 (f) so the trace does not shift vertically when the front-panel SMOOTHING controls are turned.

6. Set Channel A Risetime

a. Connect the Channel A P6038 Probe to the system of step 4. Use either step 4A or 4B depending on whether you are using a digital unit.

b. Adjust the A BRIDGE VOLTS control (R169) so that the Channel A risetime is the same as the Channel B risetime.

c. Repeat step 5 (e) for Channel A.

7. Vertical Balance

Repeat step 2 (a) through 2 (h) for both channels.

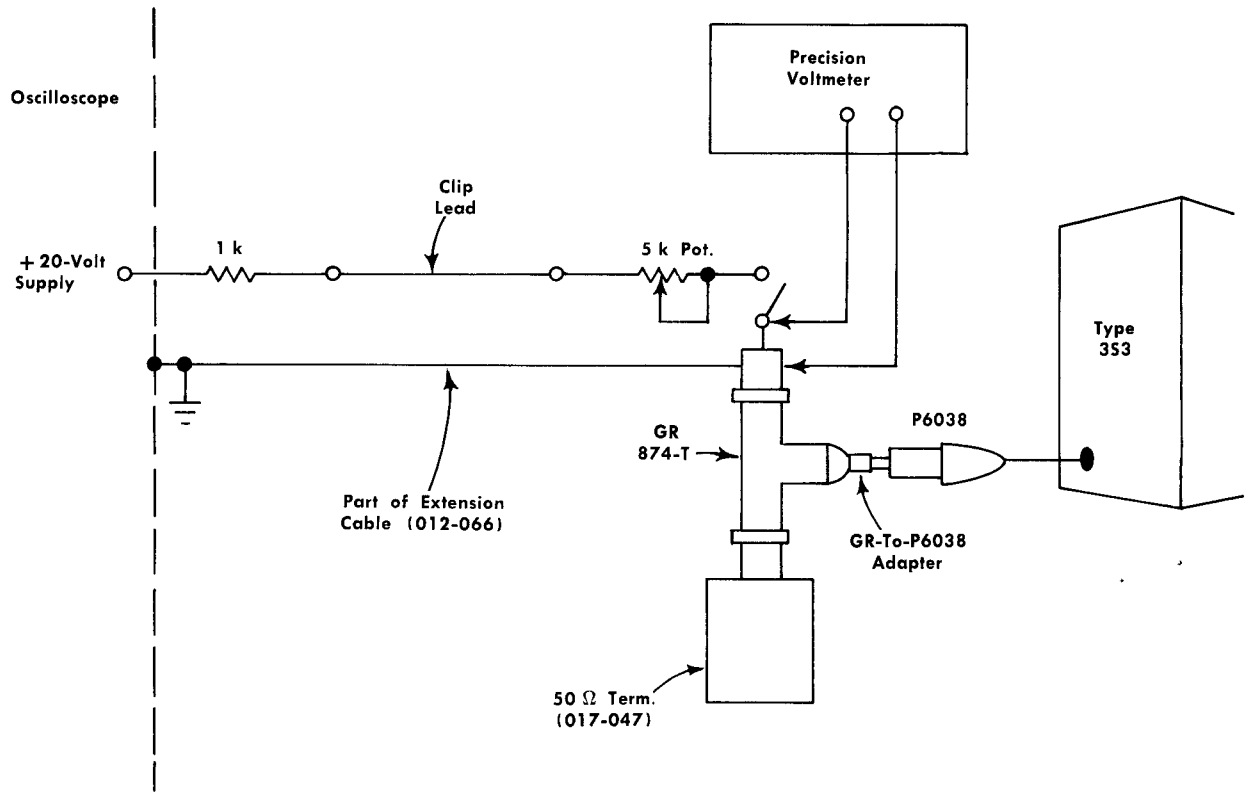

Fig. 5-5. Circuit used to set Type 3S3 dc gain.

8A. Vertical Gain and Digital Gain Adjustment—With Digital Unit

a. Connect the Channel A P6038 Probe to the system shown in Fig. 5-5. Leave the switch open.

b. Set the Type 3S3 MV/DIV switch to 100, the VARIABLE to CALIB, the Noise-Risetime switch to FAST RT, and the SMOOTHING control counterclockwise.

c. Position a free-running trace at −3 divisions.

d. Close the switch and set the 5 k potentiometer for exactly +0.6 volt, as read from the precision voltmeter.

e. Adjust the front-panel GAIN control until the display is exactly +3 divisions, a total of 6 divisions from zero volts to +0.6 volt. Make and break the connection several times to be certain of correct adjustment.

f. Connect a Type 105 or Type 190 to the SIG. IN FOR TRIG. TAKEOFF connector of the Type 110. Turn the Type 110 PULSE GENERATOR switch OFF.

g. Connect the GR 874-T of Fig. 5-5 to the Type 113 Delay Cable end so that the signal generator can be used to operate the Type 3S3, and externally trigger the Type 3T77 through the Type 110. The Type 110 trigger takeoff operates without the POWER switch ON. Remove the 2X attenuator in the line to the Type 113.

h. Set the Type 105 to operate at 1 megacycle, or the Type 190 to operate at 50 megacycles. Adjust the output amplitude so a triggered display is exactly 6 divisions peak-to-peak. See Fig. 5-6. The signal generator output is now 0.6 volt peak-to-peak at the tip of the P6038 Probe.

i. Set the Type 6R1 to read Channel A voltage at LO resolution.

j. Adjust the Type 3S3 A DIGITAL GAIN control (R354) so the digital unit indicates 600 MV.

k. Adjust the front-panel GAIN control so the display is again exactly 6 divisions peak-to-peak. The display will move vertically as the GAIN control is turned; reposition using the POSITION control.

l. Repeat for Channel B.

8B. Vertical Gain and Digital Gain—Without a Digital Unit

a. Leave the Type 3S3 DIGITAL GAIN (A and B) controls as adjusted at the factory.

b. Do step 8A (a) through 8A (e) for both channels.

9. Smoothing Range Check

a. Connect a probe to the Type 110 pulser system.

b. Set the Type 3S3 Noise-Risetime switches to FAST RT. Obtain a display at unity loop gain and 10 dots/div.

c. Turn the SMOOTHING control fully clockwise. Set the Noise-Risetime switch to LOW NOISE. The display should show slightly less than unity loop gain. If the display tears, indicating greater than unity loop gain, repeat the Loop gain portion of step 5. There should be no display tearing when the SMOOTHING control is clockwise and the signal source impedance is 50 Ω.

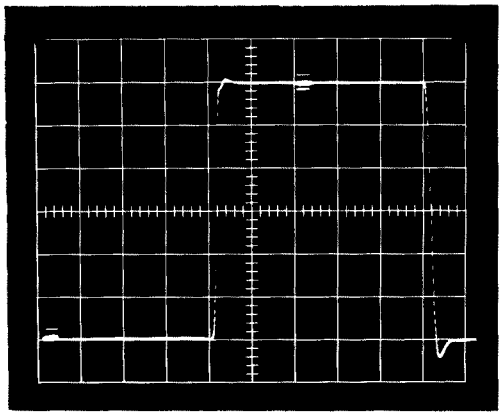

(a) Type 105 at 1 mc. 0.1 μsec/div.

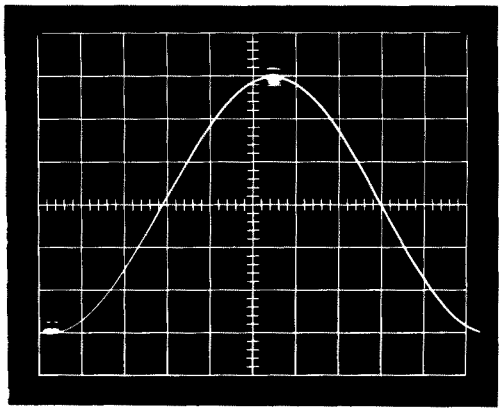

(b) Type 190 at 50 mc. 2 nsec/div.

Fig. 5-6. Using a square wave or a sine wave to set DIGITAL GAIN.

d. Repeat for the other channel.

10. Noise Check

a. Place a probe into the Type 110 pulser system. Set the Type 3S3 MV/DIV switch to 100, VARIABLE to CALIB, Noise-Risetime switch to LOW NOISE, and the SMOOTHING control clockwise. Trigger the display and set the Type 110 so the digital unit indicates 300 MV.

b. Set the digital unit RESOLUTION switch to UNSCALED. The readout should still be 300.

c. Turn the Type 3S3 VARIABLE control clockwise until the unscaled digital unit reading is 600.

d. Turn off the Type 110 pulser. Leave the probe connected to the Type 113. Free run the Timing Unit sweep. Set the Type 3S3 MV/DIV switch to 5, being careful not to move the VARIABLE control. The system deflection factor is now 0.5 mv per minor graticule division. The noise should be less than 1 minor division (less than 0.5 mv).

e. Set the Noise-Risetime switch to FAST RT and the SMOOTHING control counterclockwise. Disregarding 10% of the noise peaks, the noise should be about 4 minor graticule divisions (about 1.5 to 2 mv).

f. Repeat for the other channel.

NOTE

If the noise is significantly higher than these limits, look for trouble in one or more of the following possible causes.

Possible Noise Causes

1. High energy radio frequency radiation in the vicinity of the sampling system.

2. A high degree of sampling bridge volts imbalance, such as a ratio of 5 to 1 or greater between the + and — volts to one of the probes. This indicates defective sampling diodes. Details of the diode locations and Tektronix part numbers are in the maintenance section of this manual.

11. Final Check

a. Turn off the oscilloscope. Restore any subchassis mounted on the subchassis extender. Install the Type 3S3 inside the oscilloscope immediately. Do not let it cool.

b. Turn the oscilloscope on and let it warm up for 10 minutes with the side panels in place.

c. Run through a quick check of the balance of a free-running trace, step 2.

Recalibration With New P6038 Probe

A new P6038 Probe is either a currently used probe with a new set of sampling diodes, or a new probe never before used on your Type 3S3. If installing a new probe, be sure to place the correct color band on the probe body.

1. Install the new probe and perform all of the previous procedure.

2. Time Coincidence Check

a. Move the 2X attenuator of the Type 110 pulser system to the output of the Type 113 Delay Cable. Install the side connection of a GR 874-T to the 2X attenuator, and a GR-To-P6038 Adapter to each remaining Tee connection. Insert a P6038 Probe into each adapter.

b. Operate the pulser system and Type 3T77 for an externally-triggered 0.2 nsec/div display (TIME/DIV: .2 nSEC; HORIZ. MAG: X1).

c. Set the Type 3S3 MODE switch to DUAL-TRACE and adjust the Type 3T77 DELAY control so the dual display shows the pulse rise near the crt center. Carefully position the two displays to be the same vertically.

d. Set both MV/DIV switches to 20 so the top or bottom of the displays is well off the screen, the start is visible, and the pulse rises are essentially vertical.

Each minor horizontal division is 40 psec. If the two pulse-rise positions are more than 60 psec apart, record the difference and determine which rise is Channel A and which rise is Channel B.

e. Fig. 5-7 shows the location of an adjustable time system on the Gate Generator subchassis. For example, if Channel A display should need to be moved to the right 30 psec, move the red and green leads to T160 exactly one centimeter closer to the 22-pin connector. Use a small soldering iron and move both leads equally so they are parallel when moved. A total range of about 100 psec adjustment is available by moving the red and green leads of both channels in opposite directions.

If it is necessary to move the leads just described, be careful not to change the twist as you move them. (Take care not to alter the turns-per-inch of the red-green leads located at D200, the snap off diode.)

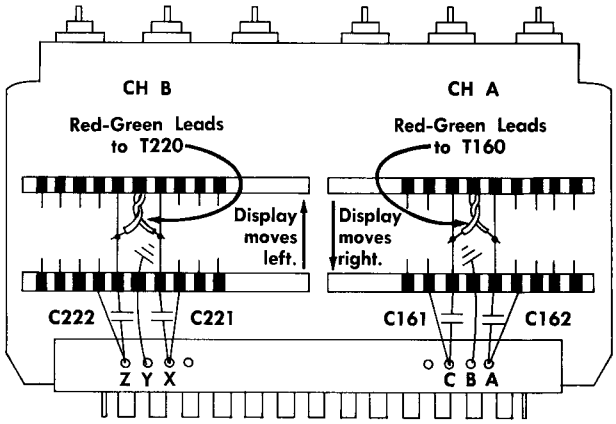

Fig. 5-7. Gate Generator parts location for adjusting co-channel time coincidence.

NOTES

SECTION 6
PARTS LIST AND SCHEMATICS

PARTS ORDERING INFORMATION

Replacement parts are available from or through your local Tektronix Field Office.

Changes to Tektronix instruments are sometimes made to accommodate improved components as they become available, and to give you the benefit of the latest circuit improvements developed in our engineering department. It is therefore important, when ordering parts, to include the following information in your order: Part number including any suffix, instrument type, serial number, and modification number if applicable.

If a part you have ordered has been replaced with a new or improved part, your local Tektronix Field Office will contact you concerning any change in part number.

ABBREVIATIONS AND SYMBOLS

a or amp	amperes
BHS	binding head steel
C	carbon
cer	ceramic
cm	centimeter
comp	composition
cps	cycles per second
crt	cathode-ray tube
CSK	counter sunk
dia	diameter
div	division
EMC	electrolytic, metal cased
EMT	electroyltic, metal tubular
ext	external
f	farad
F & I	focus and intensity
FHS	flat head steel
Fil HS	fillister head steel
g or G	giga, or 10^9
Ge	germanium
GMV	guaranteed minimum value
h	henry
hex	hexagonal
HHS	hex head steel
HSS	hex socket steel
HV	high voltage
ID	inside diameter
incd	incandescent
int	internal
k or K	kilohms or kilo (10^3)
kc	kilocycle
m	milli, or 10^{-3}
mc	megacycle
mm	millimeter
meg or M	megohms or mega (10^6)
met.	metal
μ	micro, or 10^{-6}
n	nano, or 10^{-9}
Ω	ohm
OD	outside diameter
OHS	oval head steel
p	pico, or 10^{-12}
PHS	pan head steel
piv	peak inverse voltage
plstc	plastic
PMC	paper, metal cased
poly	polystyrene
Prec	precision
PT	paper tubular
PTM	paper or plastic, tubular, molded
RHS	round head steel
rms	root mean square
sec	second
Si	silicon
S/N	serial number
t or T	tera, or 10^{12}
TD	toroid
THS	truss head steel
tub.	tubular
v or V	volt
Var	variable
w	watt
w/	with
w/o	without
WW	wire-wound

SPECIAL NOTES AND SYMBOLS

X000	Part first added at this serial number.
000X	Part removed after this serial number.
*000-000	Asterisk preceding Tektronix Part Number indicates manufactured by or for Tektronix, or reworked or checked components.
Use 000-000	Part number indicated is direct replacement.
⊘	Internal screwdriver adjustment.
▭	Front-panel adjustment or connector.

FRONT AND ACCESSORIES

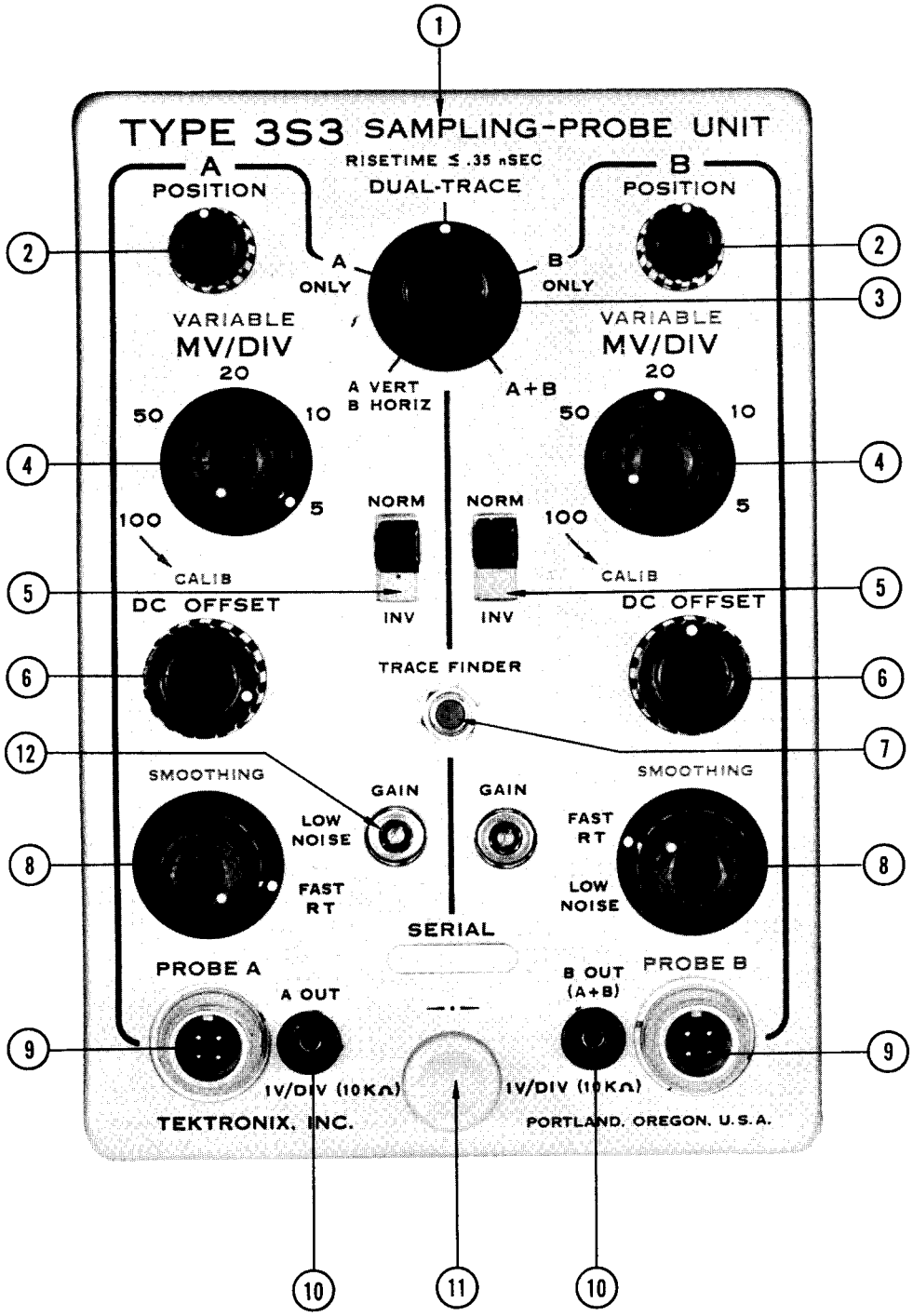

FRONT AND ACCESSORIES

REF. NO.	PART NO.	SERIAL NO. EFF.	SERIAL NO. DISC.	QTY.	DESCRIPTION
1	333-758			1	PANEL, front
	387-808			1	PLATE, front subpanel
2	366-153			2	KNOB, POSITION, small charcoal
	210-583			2	NUT, hex, 1/4-32 x 5/16 inch
	210-940			2	WASHER, 1/4 ID x 3/8 inch OD
	210-223			2	LUG, solder, 1/4 inch
3	366-173			1	KNOB, Mode, charcoal
4	366-250			2	KNOB, MV/DIV, charcoal
	366-140			2	KNOB, VARIABLE, small red
5	260-447			2	SWITCH, slide
	.....			.	Mounting Hardware For Each: (not included)
	210-406			2	NUT, hex, 4-40 x 3/16 inch
6	366-148			2	KNOB, DC OFFSET, charcoal
	210-413			2	NUT, hex, 3/8-32 x 1/2 inch
	210-840			2	WASHER, .390 ID x 9/16 inch OD
7	260-324			1	SWITCH, push button
	.....			.	Mounting Hardware: (not included)
	210-583			1	NUT, hex, 1/4-32 x 5/16 inch
	210-940			1	WASHER, 1/4 ID x 3/8 inch OD
8	366-249			2	KNOB, FAST RT-LOW NOISE, charcoal
	366-255			2	KNOB, SMOOTHING, small red
	210-413			2	NUT, hex, 3/8-32 x 1/2 inch
	210-840			2	WASHER, .390 ID x 9/16 inch OD
	210-013			2	LOCKWASHER, internal, 3/8 x 11/16 inch
9	131-281			2	CONNECTOR, probe power
	.....			.	Mounting Hardware For Each: (not included)
	210-559			1	NUT, hex, 7/16-28 x 9/16 inch
	210-021			1	LOCKWASHER, internal
	210-241			1	LUG, ground
10	136-163			2	SOCKET, banana jack
	.....			.	Mounting Hardware For Each: (not included)
	210-471			1	NUT, hex, 1/4-32 x 5/16 inch
11	366-109			1	KNOB, plug-in securing
12	358-054			2	BUSHING, banana jack
	.....			.	Mounting Hardware For Each: (not included)
	210-471			1	NUT, hex, 1/4-32 x 5/16 inch
	210-046			1	LOCKWASHER, internal, .400 OD x .261 inch ID
					ACCESSORIES
	010-156			2	P6038 PROBE PACKAGE (not shown)

RIGHT SIDE

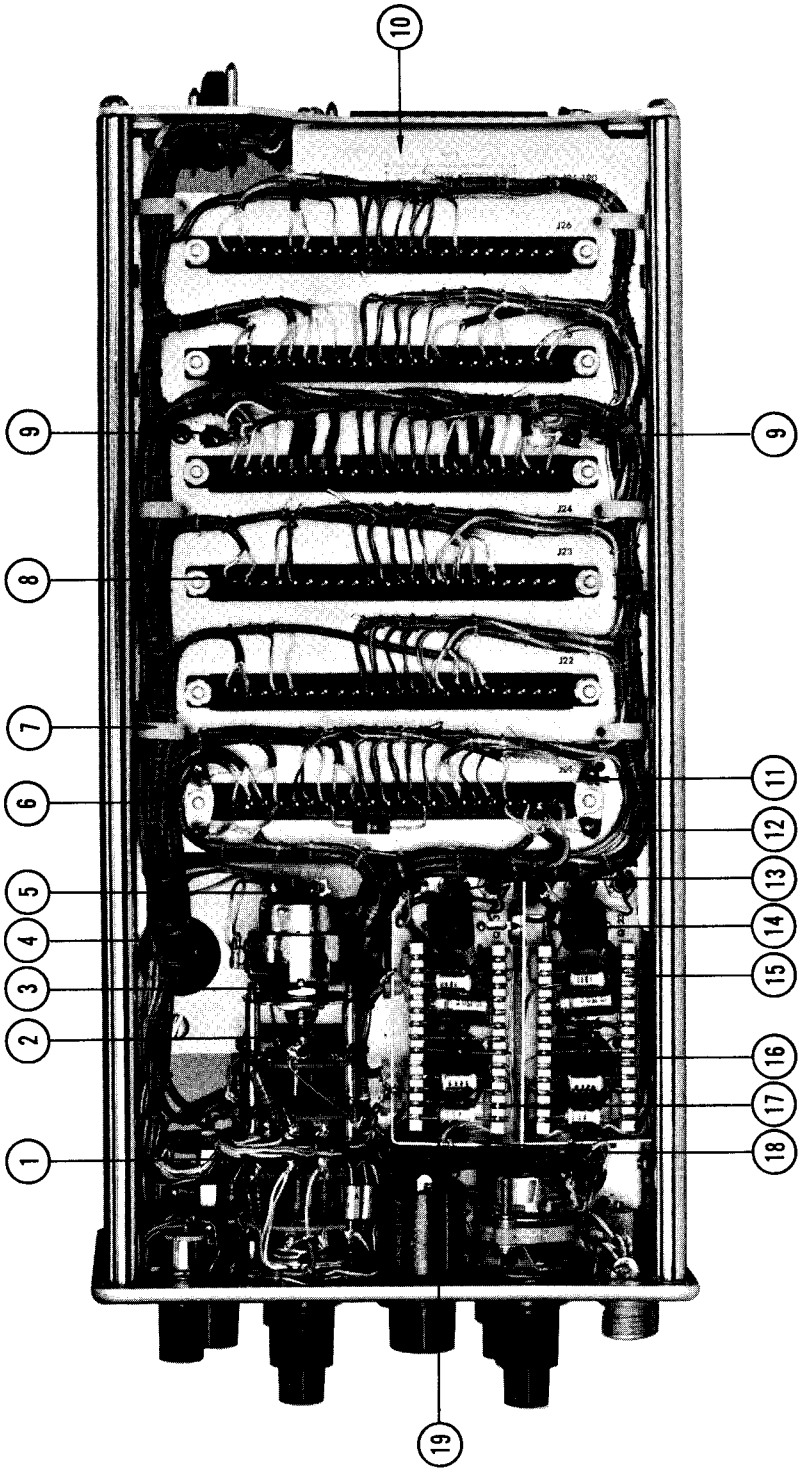

RIGHT SIDE

REF. NO.	PART NO.	SERIAL NO. EFF.	SERIAL NO. DISC.	QTY.	DESCRIPTION
1	262-610			1	SWITCH, MV/DIV, wired
	.....			.	Includes:
	260-550			1	SWITCH, unwired
2	384-290			1	ROD, switch shaft
	376-014			1	COUPLING, pot, wire
3	210-413			2	NUT, hex, 3/8-32 x 1/2 inch
	210-012			1	LOCKWASHER, internal, 3/8 x 1/2 inch
	.....			.	Mounting Hardware For Switch: (not included)
	210-413			1	NUT, hex, 3/8-32 x 1/2 inch
	210-840			1	WASHER, .390 ID x 9/16 inch OD
	210-012			1	LOCKWASHER, internal, 3/8 x 1/2 inch
4	348-006			1	GROMMET, 3/4 inch
5	348-005			1	GROMMET, 1/2 inch
6	179-789			1	CABLE, harness, Channel B
7	343-089			7	CLAMP, cable, size D
8	131-220			6	CONNECTOR, chassis mount, 22 pin
	.....			.	Mounting Hardware For Each: (not included)
	211-511			2	SCREW, 6-32 x 1/2 inch BHS
	210-006			2	LOCKWASHER, internal, #6
	210-407			2	NUT, hex, 6-32 x 1/4 inch
9	210-201			2	LUG, solder, SE4
	213-044			2	SCREW, thread cutting, 5-32 x 3/16 inch PHS phillips
10	426-190			1	FRAME, connector chassis
	.....			.	Mounting Hardware: (not included)
	211-507			4	SCREW, 6-32 x 5/16 inch BHS
	211-504			5	SCREW, 6-32 x 1/4 inch BHS
11	210-204			2	LUG, solder, DE6
12	179-788			1	CABLE, harness, Channel A
13	179-852			1	CABLE, harness, preamp chassis B
14	179-838			1	CABLE, harness, preamp chassis A
15	124-147			4	STRIP, ceramic, 7/16 inch x 13 notches
	361-009			8	SPACER, nylon
16	136-085			2	SOCKET, 9 pin, shielded base
	.....			.	Mounting Hardware For Each: (not included)
	211-033			2	SCREW, 4-40 x 5/16 inch PHS with lockwasher
	210-201			2	LUG, solder, SE4
	210-406			2	NUT, hex, 4-40 x 3/16 inch
17	337-585			1	SHIELD, channel divider
	.....			.	Mounting Hardware: (not included)
	210-406			2	NUT, hex, 4-40 x 3/16 inch
	210-004			2	LOCKWASHER, internal, #4
18	337-584			1	SHIELD, preamp
	.....			.	Mounting Hardware: (not included)
	211-007			2	SCREW, 4-40 x 3/16 inch BHS
19	348-031			7	GROMMET, poly. snap-in

LEFT SIDE

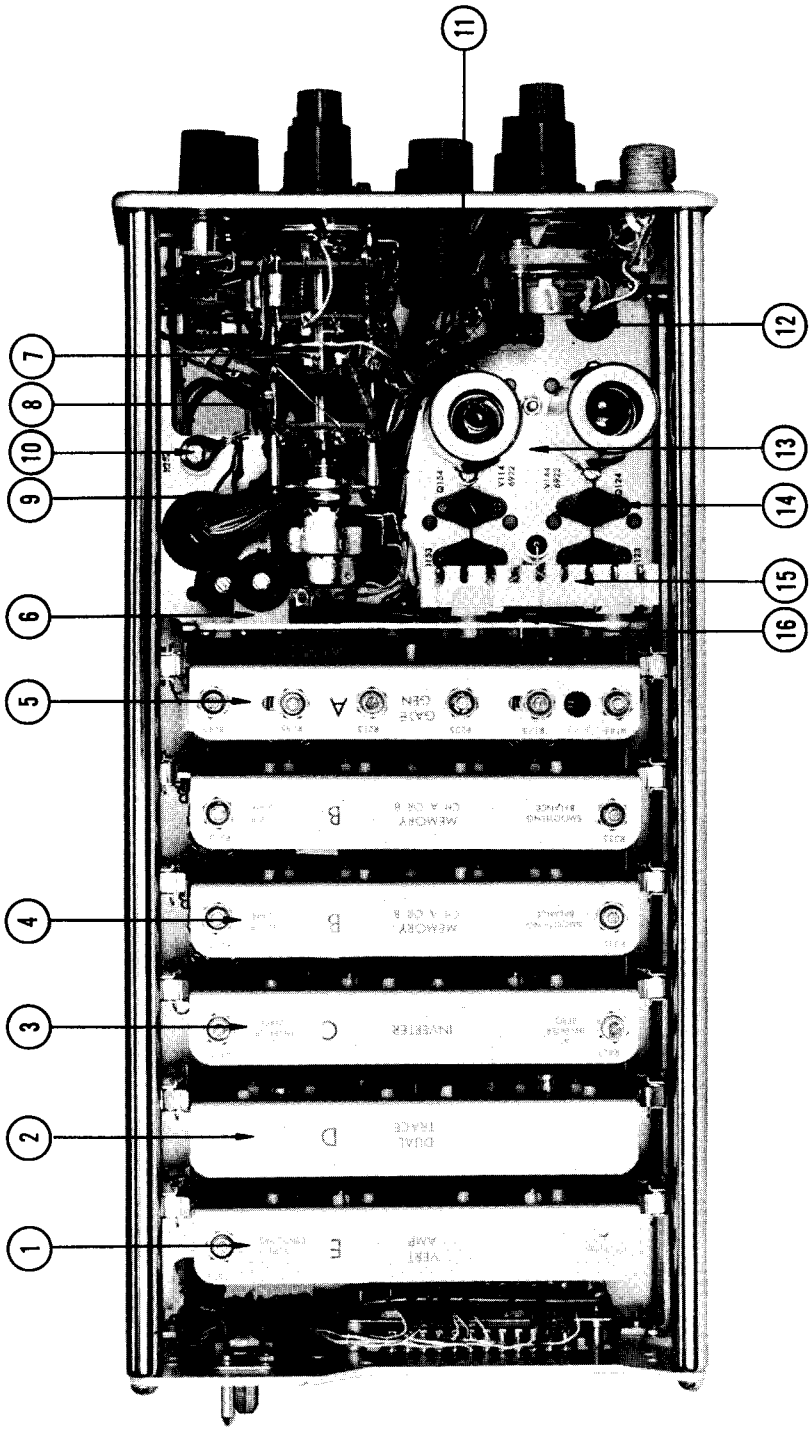

LEFT SIDE

REF. NO.	PART NO.	SERIAL NO. EFF.	SERIAL NO. DISC.	QTY.	DESCRIPTION
1	605-021			1	CHASSIS, VERTICAL AMPLIFIER, series E
2	605-020			1	CHASSIS, DUAL TRACE, series D
3	605-019			1	CHASSIS, INVERTER, series C
4	605-018			2	CHASSIS, MEMORY, series B
5	605-017			1	CHASSIS, GATE GENERATOR, series A
6	406-635			2	BRACKET, pot mounting
	.....			.	Mounting Hardware For Each: (not included)
	213-035			2	SCREW, thread cutting, 4-40 x 1/4 inch PHS phillips
7	262-610			1	SWITCH, MV/DIV, wired
	.....			.	Includes:
	260-550			1	SWITCH, unwired
8	384-290			1	ROD, switch shaft
	376-014			1	COUPLING, pot, wire
9	210-413			2	NUT, hex, 3/8-32 x 1/2 inch
	210-012			1	LOCKWASHER, internal, 3/8 x 1/2 inch
	.....			.	Mounting Hardware For Switch: (not included)
	210-413			1	NUT, hex, 3/8-32 x 1/2 inch
	210-840			1	WASHER, .390 ID x 9/16 inch OD
	210-012			1	LOCKWASHER, internal, 3/8 x 1/2 inch
10	211-545			1	SCREW, 6-32 x 1 1/4 inch THS phillips
	210-478			1	NUT, hex, 5-10 w resistor mounting
	211-507			1	SCREW, 6-32 x 5/16 inch BHS
11	210-204			1	LUG, solder, DE6
	213-044			1	SCREW, thread cutting, 5-32 x 3/16 inch PHS phillips
12	348-004			1	GROMMET, 3/8 inch
13	441-503			1	CHASSIS, preamp
	.....			.	Mounting Hardware: (not included)
	211-541			3	SCREW, 6-32 x 1/4 inch FHS phillips
14	136-161			4	SOCKET, 3 pin transistor
	.....			.	Mounting Hardware For Each: (not included)
	213-113			2	SCREW, thread cutting, 2-32 x 5/16 inch RHS phillips
15	124-095			2	STRIP, ceramic, 7/16 inch x 9 notches
	361-007			4	SPACER, nylon
16	210-259			1	LUG, solder, peewee
	213-055			1	SCREW, thread cutting, 2-32 x 3/16 inch PHS phillips

TOP-BOTTOM

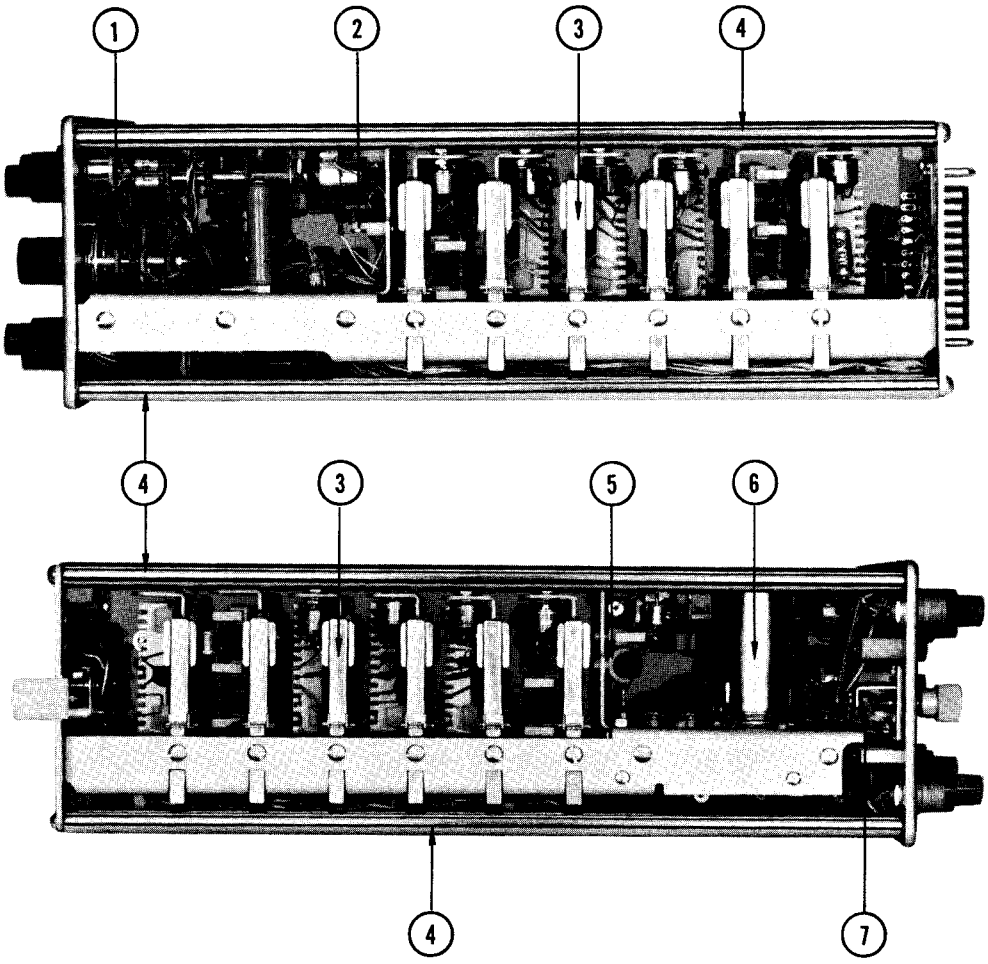

REF. NO.	PART NO.	SERIAL NO. EFF.	SERIAL NO. DISC.	QTY.	DESCRIPTION
1	262-619			1	SWITCH, Mode, wired
	.....			.	Includes:
	260-549			1	SWITCH, unwired
	.....			.	Mounting Hardware For Switch: (not included)
	210-413			1	NUT, hex, 3/8-32 x 1/2 inch
	210-840			1	WASHER, .390 ID x 9/16 inch OD
	210-012			1	LOCKWASHER, internal, 3/8 x 1/2 inch
	210-207			1	LUG, solder, 3/8 inch
2	210-438			4	NUT, hex, 1-72 x 5/32 inch
3	351-067			12	GUIDE, board, assembly
	.....			.	Mounting Hardware For Each: (not included)
	211-504			1	SCREW, 6-32 x 1/4 inch BHS
4	384-566			4	ROD, frame, spacing
5	426-121			6	HOLDER, toroid
	361-007			6	SPACER, nylon
6	337-008			2	SHIELD, tube
7	214-052			1	FASTENER, pawl right with stop
	.....			.	Mounting Hardware: (not included)
	210-406			2	NUT, hex, 4-40 x 3/16 inch
	210-004			2	LOCKWASHER, internal, #4

REAR

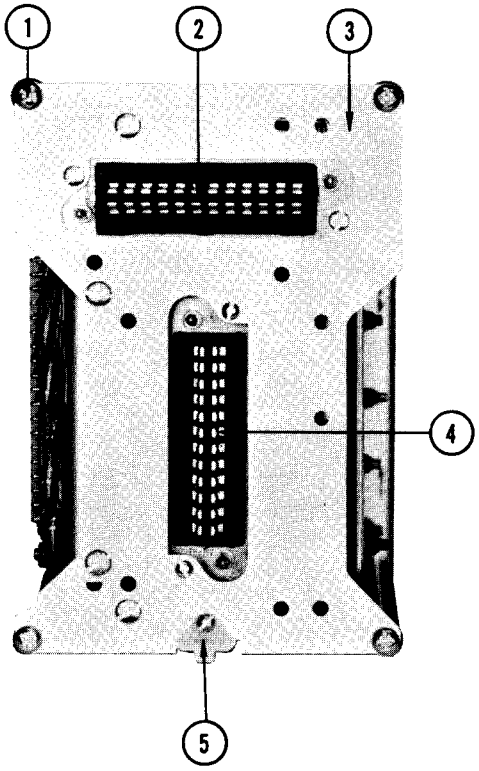

REF. NO.	PART NO.	SERIAL NO. EFF.	SERIAL NO. DISC.	QTY.	DESCRIPTION
1	212-044			4	SCREW, 8-32 x 1/2 inch RHS phillips
2	131-149			1	CONNECTOR, chassis mount, 24 pin
	.....			.	Mounting Hardware: (not included)
	211-008			2	SCREW, 4-40 x 1/4 inch BHS
	210-004			1	LOCKWASHER, internal, #4
	210-201			1	LUG, solder, SE4
	210-406			2	NUT, hex, 4-40 x 3/16 inch
3	387-595			1	PLATE, rear
4	131-149			1	CONNECTOR, chassis mount, 24 pin
	.....			.	Mounting Hardware: (not included)
	211-016			2	SCREW, 4-40 x 5/8 inch RHS
	166-032			2	TUBE, spacer
	210-201			1	LUG, solder, SE4
	210-204			1	LUG, solder, DE6
	210-406			2	NUT, hex, 4-40 x 3/16 inch
5	351-037			1	GUIDE, shoe
	.....			.	Mounting Hardware: (not included)
	211-013			1	SCREW, 4-40 x 3/8 inch RHS
	210-004			1	LOCKWASHER, internal, #4
	210-406			1	NUT, hex, 4-40 x 3/16 inch

GATE GENERATOR CHASSIS

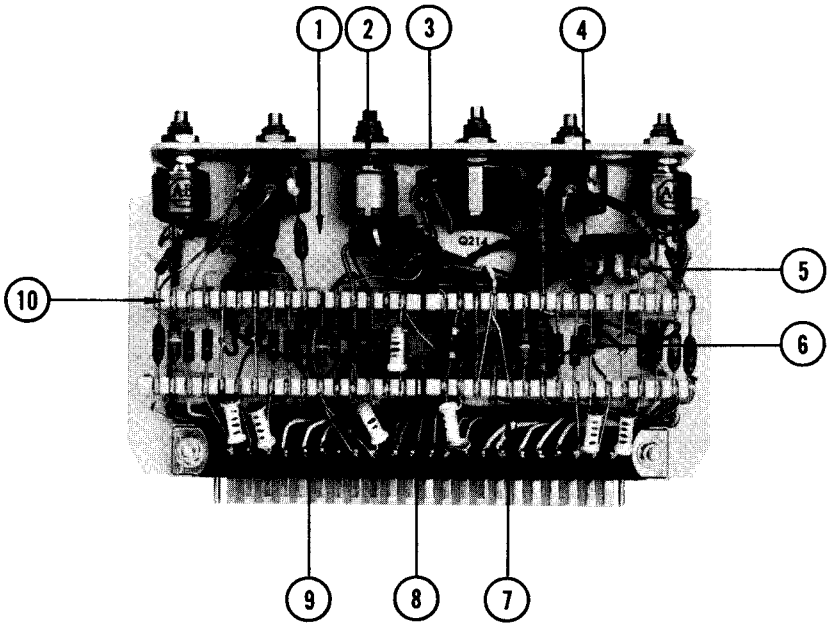

REF. NO.	PART NO.	SERIAL NO. EFF.	SERIAL NO. DISC.	QTY.	DESCRIPTION
1	441-509			1	CHASSIS, Gate Generator
2	.....			.	Mounting Hardware For Pots:
	210-583			10	NUT, hex, 1/4-32 x 5/16 inch
	210-940			6	WASHER, 1/4 ID x 3/8 inch OD
	210-046			6	LOCKWASHER, internal, .400 OD x .261 inch ID
3	136-095			1	SOCKET, 4 pin transistor
	.....			.	Mounting Hardware: (not included)
	211-081			2	SCREW, 2-56 x 9/16 inch RHS phillips
	361-035			2	SPACER, transistor socket
4	406-635			1	BRACKET, pot mounting
	.....			.	Mounting Hardware: (not included)
	213-035			2	SCREW, thread cutting, 4-40 x 1/4 inch PHS phillips
5	210-438			2	NUT, hex, 1-72 x 5/32 inch
6	210-259			3	LUG, solder, peewee
	213-055			3	SCREW, thread cutting, 2-32 x 3/16 inch PHS phillips
7	179-794			1	CABLE, harness, Gate Generator
8	136-161			1	SOCKET, 3 pin transistor
	.....			.	Mounting Hardware: (not included)
	211-081			2	SCREW, 2-56 x 9/16 inch RHS phillips
	361-035			2	SPACER, transistor socket
9	131-218			1	CONNECTOR, chassis mount, 22 pin
	.....			.	Mounting Hardware: (not included)
	211-016			2	SCREW, 4-40 x 5/8 inch RHS
	210-801			2	WASHER, 5S x 9/32 inch
	210-004			2	LOCKWASHER, internal, #4
	210-406			2	NUT, hex, 4-40 x 3/16 inch
10	124-146			4	STRIP, ceramic, 7/16 inch x 16 notches
	361-008			8	SPACER, nylon

MEMORY CHASSIS

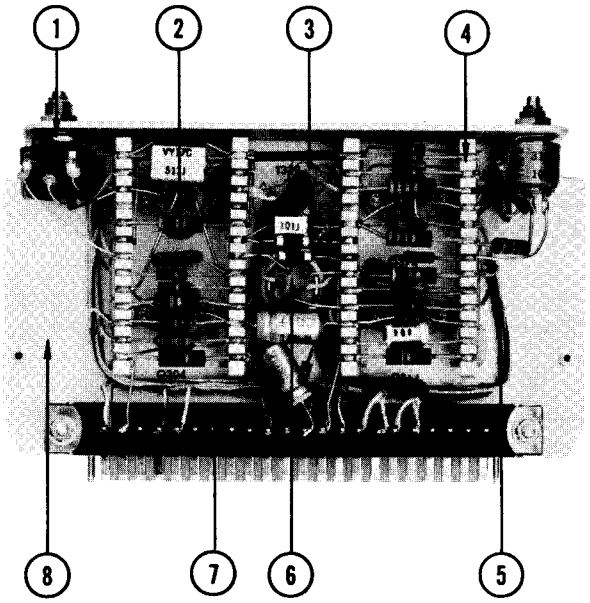

REF. NO.	PART NO.	SERIAL NO. EFF.	SERIAL NO. DISC.	QTY.	DESCRIPTION
1	.....			.	Mounting Hardware For Pots:
	210-583			3	NUT, hex, 1/4-32 x 5/16 inch
	210-940			2	WASHER, 1/4 ID x 3/8 inch OD
	210-046			1	LOCKWASHER, internal, .400 OD x .261 inch ID
	210-223			1	LUG, solder, 1/4 inch
2	136-161			4	SOCKET, 3 pin transistor
	.....			.	Mounting Hardware For Each: (not included)
	211-081			2	SCREW, 2-56 x 9/16 inch RHS phillips
	361-035			2	SPACER, transistor socket
3	426-121			1	HOLDER, toroid
	361-007			1	SPACER, nylon
4	124-147			4	STRIP, ceramic, 7/16 inch x 13 notches
	361-008			8	SPACER, nylon
5	179-790			1	CABLE, harness, Memory
6	136-101			1	SOCKET, 4 pin tube
	.....			.	Mounting Hardware: (not included)
	211-081			2	SCREW, 2-56 x 9/16 inch RHS phillips
	210-259			3	LUG, solder, peewee
	166-025			2	TUBE, spacer, 1/4 inch
	210-001			2	LOCKWASHER, internal, #2
	210-405			2	NUT, hex, 2-56 x 3/16 inch
7	131-218			1	CONNECTOR, chassis mount, 22 pin
	.....			.	Mounting Hardware: (not included)
	211-016			2	SCREW, 4-40 x 5/8 inch RHS phillips
	210-801			2	WASHER, 5S x 9/32 inch
	210-004			2	LOCKWASHER, internal, #4
	210-406			2	NUT, hex, 4-40 x 3/16 inch
8	441-508			1	CHASSIS, Memory

INVERTER CHASSIS

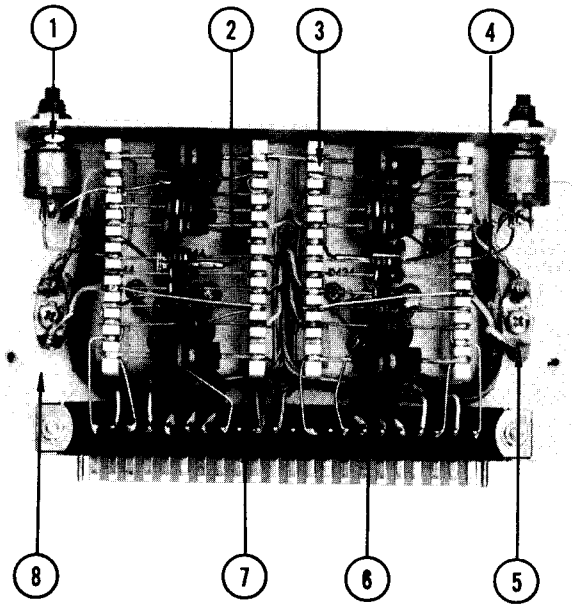

REF. NO.	PART NO.	SERIAL NO. EFF.	SERIAL NO. DISC.	QTY.	DESCRIPTION
1	.....			.	Mounting Hardware For Pots:
	210-583			4	NUT, hex, 1/4-32 x 5/16 inch
	210-940			2	WASHER, 1/4 ID x 3/8 inch OD
	210-046			2	LOCKWASHER, internal, .400 OD x .261 inch ID
2	210-259			4	LUG, solder, peewee
	213-055			4	SCREW, thread cutting, 2-32 x 3/16 inch PHS phillips
3	124-147			4	STRIP, ceramic, 7/16 inch x 13 notches
	361-008			8	SPACER, nylon
4	179-791			1	CABLE, harness, Inverter
5	210-204			2	LUG, solder, DE6
	213-044			2	SCREW, thread cutting, 5-32 x 3/16 inch PHS phillips
6	136-161			4	SOCKET, 3 pin transistor
	.....			.	Mounting Hardware For Each: (not included)
	211-081			2	SCREW, 2-56 x 9/16 inch RHS phillips
	361-035			2	SPACER, transistor socket
7	131-218			1	CONNECTOR, chassis mount, 22 pin
	.....			.	Mounting Hardware: (not included)
	211-016			2	SCREW, 4-40 x 5/8 inch RHS
	210-801			2	WASHER, 5S x 9/32 inch
	210-004			2	LOCKWASHER, internal, #4
	210-406			2	NUT, hex, 4-40 x 3/16 inch
8	441-507			1	CHASSIS, Inverter

DUAL TRACE CHASSIS

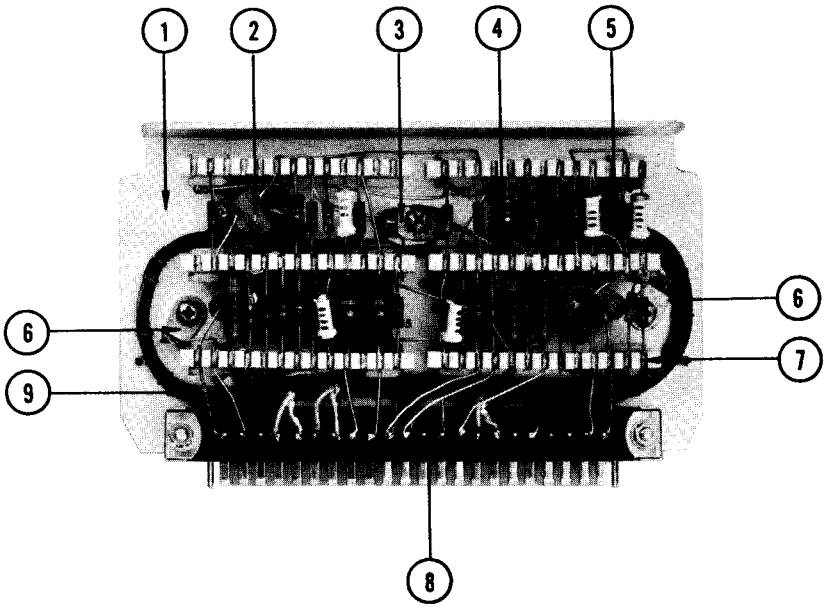

REF. NO.	PART NO.	SERIAL NO. EFF.	SERIAL NO. DISC.	QTY.	DESCRIPTION
1	441-504			1	CHASSIS, Dual Trace
2	136-161			5	SOCKET, 3 pin transistor
	.....			.	Mounting Hardware For Each: (not included)
	211-081			2	SCREW, 2-56 x 9/16 inch RHS phillips
	361-035			2	SPACER, transistor socket
3	210-204			1	LUG, solder, DE6
	213-044			1	SCREW, thread cutting, 5-32 x 3/16 inch PHS phillips
4	355-046			1	STUD, nylon, toroid
	361-007			1	SPACER, nylon
5	136-095			1	SOCKET, 4 pin transistor
	.....			.	Mounting Hardware: (not included)
	211-081			2	SCREW, 2-56 x 9/16 inch RHS phillips
	361-035			2	SPACER, transistor socket
6	210-201			2	LUG, solder, SE4
	213-044			2	SCREW, thread cutting, 5-32 x 3/16 inch PHS phillips
7	124-147			6	STRIP, ceramic, 7/16 inch x 13 notches
	361-008			12	SPACER, nylon
8	131-218			1	CONNECTOR, chassis mount, 22 pin
	.....			.	Mounting Hardware: (not included)
	211-016			2	SCREW, 4-40 x 5/8 inch RHS
	210-801			2	WASHER, 5S x 9/32 inch
	210-004			2	LOCKWASHER, internal, #4
	210-406			2	NUT, hex, 4-40 x 3/16 inch
9	179-792			1	CABLE, harness, Dual Trace

VERTICAL AMPLIFIER CHASSIS

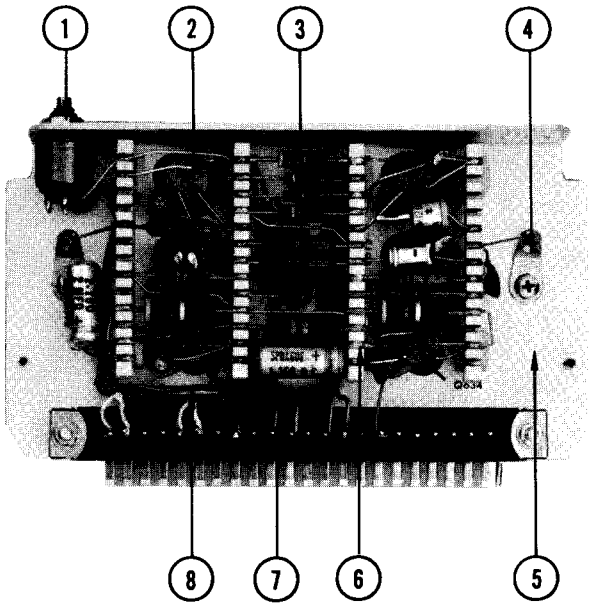

REF. NO.	PART NO.	SERIAL NO. EFF.	SERIAL NO. DISC.	QTY.	DESCRIPTION
1	.....			.	Mounting Hardware For Pots:
	210-583			1	NUT, hex, 1/4-32 x 5/16 inch
	210-940			1	WASHER, 1/4 ID x 3/8 inch OD
	210-046			1	LOCKWASHER, internal, .400 OD x .261 inch ID
2	136-161			6	SOCKET, 3 pin transistor
	.....			.	Mounting Hardware For Each: (not included)
	211-081			2	SCREW, 2-56 x 9/16 inch RHS phillips
	361-035			2	SPACER, transistor socket
3	210-204			1	LUG, solder, DE6
	213-044			1	SCREW, thread cutting, 5-32 x 3/16 inch PHS phillips
4	210-201			2	LUG, solder, SE4
	213-044			2	SCREW, thread cutting, 5-32 x 3/16 inch PHS phillips
5	441-506			1	CHASSIS, Vertical Amplifier
6	124-147			4	STRIP, ceramic, 7/16 inch x 13 notches
	361-008			8	SPACER, nylon
7	131-218			1	CONNECTOR, chassis mount, 22 pin
	.....			.	Mounting Hardware: (not included)
	211-016			2	SCREW, 4-40 x 5/8 inch RHS
	210-801			2	WASHER, 5S x 9/32 inch
	210-004			2	LOCKWASHER, internal, #4
	210-406			2	NUT, hex, 4-40 x 3/16 inch
8	179-793			1	CABLE, harness, Vertical Amplifier

ELECTRICAL PARTS

Values are fixed unless marked Variable.

Ckt. No.	Tektronix Part No.	Description			S/N Range
		Capacitors			

Tolerance ±20% unless otherwise stated.
Tolerance of electrolytic capacitors as follows (with exceptions):

3 V — 50 V = —10%, +250%
51 V — 350 V = —10%, +100%
351 V — 450 V = —10%, +50%

C102	281-513	27 pf	Cer	500 v	
C110	290-199	1 μf	EMT	150 v	
C111	281-559	.0015 μf	Cer	500 v	
C112	283-004	.02 μf	Disc Type	150 v	
C117	283-051	.0033 μf	Disc Type	100 v	5%
C119	281-546	330 pf	Cer	500 v	10%
C121	281-559	.0015 μf	Cer	500 v	
C122	283-024	.1 μf	Cer	30 v	
C123	281-536	.001 μf	Cer	500 v	10%
C126	290-106	10 μf	EMT	15 v	
C127	281-559	.0015 μf	Cer	500 v	
C129	283-003	.01 μf	Disc Type	150 v	
C133	281-513	27 pf	Cer	500 v	
C140	290-199	1 μf	EMT	150 v	
C141	281-559	.0015 μf	Cer	500 v	
C142	283-004	.02 μf	Disc Type	150 v	
C147	283-051	.0033 μf	Disc Type	100 v	5%
C149	281-546	330 pf	Cer	500 v	10%
C151	281-559	.0015 μf	Cer	500 v	
C152	283-024	.1 μf	Cer	30 v	
C153	281-536	.001 μf	Cer	500 v	10%
C156	290-106	10 μf	EMT	15 v	
C157	281-559	.0015 μf	Cer	500 v	
C158	283-563	.001 μf	Mica	500 v	10%
C159	283-003	.01 μf	Disc Type	150 v	
C252	283-068	.01 μf	Cer	500 v	
C261	283-023	.1 μf	Cer	10 v	
C281	283-023	.1 μf	Cer	10 v	
C680	283-068	.01 μf	Cer	500 v	
C681	283-068	.01 μf	Cer	500 v	
C682	283-068	.01 μf	Cer	500 v	
C685	283-068	.01 μf	Cer	500 v	
C686	283-068	.01 μf	Cer	500 v	
C689	283-068	.01 μf	Cer	500 v	
C691	283-068	.01 μf	Cer	500 v	
C693	283-068	.01 μf	Cer	500 v	
C695	283-068	.01 μf	Cer	500 v	
C697	283-068	.01 μf	Cer	500 v	
C699	283-068	.01 μf	Cer	500 v	

Diodes

Ckt. No.	Tektronix Part No.	Description		S/N Range
D123	152-008	Germanium T12G		
D153	152-008	Germanium T12G		
D252	152-060	Zener 1M20Z10/1N3027A	20 v	
D681	152-066	Silicon 1N3194		
D682	152-066	Silicon 1N3194		
D683	152-066	Silicon 1N3194		
D686	152-066	Silicon 1N3194		
D687	152-066	Silicon 1N3194		
D688	152-066	Silicon 1N3194		

Connectors

P11	131-149	Connector, 24 pin
P12	131-149	Connector, 24 pin
J21	131-220	Connector, 22 pin
J22	131-220	Connector, 22 pin
J23	131-220	Connector, 22 pin
J24	131-220	Connector, 22 pin
J25	131-220	Connector, 22 pin
J26	131-220	Connector, 22 pin
J101	131-281	Connector, Bendix
J131	131-281	Connector, Bendix

Inductors

L110	*120-183	Toroid, 9T
L121	*120-183	Toroid, 9T
L127	*120-183	Toroid, 9T
L129	276-532	Core, Shield Bead
L140	*120-183	Toroid, 9T
L151	*120-183	Toroid, 9T
L157	*120-183	Toroid, 9T
L159	276-532	Core, Shield Bead

Transistors

Q123	151-103	Planar Silicon
Q124	151-103	Planar Silicon
Q153	151-103	Planar Silicon
Q154	151-103	Planar Silicon

Resistors

Resistors are fixed, composition, ±10% unless otherwise indicated.

R102	321-327	24.9 k	1/8 w	Prec	1%
R103	321-450	475 k	1/8 w	Prec	1%
R104	315-103	10 k	1/4 w		5%
R110	315-101	100 Ω	1/4 w		5%
R111	315-101	100 Ω	1/4 w		5%

Resistors *(Cont'd)*

Ckt. No.	Tektronix Part No.	Description					S/N Range
R115	315-122	1.2 k	¼ w				5%
R116[1]	311-423	2.5 k		Var			A SMOOTHING
R117	315-122	1.2 k	¼ w				5%
R120	315-562	5.6 k	¼ w				5%
R123	321-318	20 k	⅛ w			Prec	1%
R124	301-513	51 k	½ w				5%
R125	315-133	13 k	¼ w				5%
R126	315-560	56 Ω	¼ w				5%
R132	321-327	24.9 k	⅛ w			Prec	1%
R133	321-450	475 k	⅛ w			Prec	1%
R134	315-103	10 k	¼ w				5%
R140	315-101	100 Ω	¼ w				5%
R141	315-101	100 Ω	¼ w				5%
R145	315-122	1.2 k	¼ w				5%
R146[2]	311-423	2.5 k		Var			B SMOOTHING
R147	315-122	1.2 k	¼ w				5%
R150	315-562	5.6 k	¼ w				5%
R153	321-318	20 k	⅛ w			Prec	1%
R154	301-513	51 k	½ w				5%
R155	315-133	13 k	¼ w				5%
R156	315-560	56 Ω	¼ w				5%
R252	308-069	12 k	8 w			WW	5%
R260A	321-320	21 k	⅛ w			Prec	1%
R260B	321-291	10.5 k	⅛ w			Prec	1%
R260C	321-252	4.12 k	⅛ w			Prec	1%
R260D	321-223	2.05 k	⅛ w			Prec	1%
R260E	321-193	1 k	⅛ w			Prec	1%
R261A	321-197	1.10 k	⅛ w			Prec	1%
R261B	321-199	1.15 k	⅛ w			Prec	1%
R261C	321-207	1.40 k	⅛ w			Prec	1%
R261D	321-224	2.10 k	⅛ w			Prec	1%
R280A	321-320	21 k	⅛ w			Prec	1%
R280B	321-291	10.5 k	⅛ w			Prec	1%
R280C	321-252	4.12 k	⅛ w			Prec	1%
R280D	321-223	2.05 k	⅛ w			Prec	1%
R280E	321-193	1 k	⅛ w			Prec	1%
R281A	321-197	1.10 k	⅛ w			Prec	1%
R281B	321-199	1.15 k	⅛ w			Prec	1%
R281C	321-207	1.40 k	⅛ w			Prec	1%
R281D	321-224	2.10 k	⅛ w			Prec	1%
R341	311-428	50 k		Var			A DC OFFSET
R342	323-414	200 k	½ w			Prec	1%

[1] See footnote page 6-18.

[2] See footnote page 6-18.

Resistors *(Cont'd)*

Ckt. No.	Tektronix Part No.	Description					S/N Range
R343	309-342	1.67 meg	½ w		Prec	1%	
R344	321-619	1.012 k	⅛ w		Prec	¼%	
R346	321-620	8.45 k	⅛ w		Prec	¼%	
R348A	321-632	9.41 k	⅛ w		Prec	¼%	
R348B	321-633	37.63 k	⅛ w		Prec	¼%	
R348C	321-634	84.65 k	⅛ w		Prec	¼%	
R348D	321-635	178.7 k	⅛ w		Prec	¼%	
R349	321-193	1 k	⅛ w		Prec	1%	
R350	301-204	200 k	½ w			5%	
R352[3]	311-273	10 k		Var			A VARIABLE
R354	311-074	5 k		Var			'A' DIGITAL GAIN
R401	311-428	50 k		Var			B DC OFFSET
R402	323-414	200 k	½ w		Prec	1%	
R403	309-342	1.67 meg	½ w		Prec	1%	
R404	321-619	1.012 k	⅛ w		Prec	¼%	
R406	321-620	8.45 k	⅛ w		Prec	¼%	
R408A	321-632	9.41 k	⅛ w		Prec	¼%	
R408B	321-633	37.63 k	⅛ w		Prec	¼%	
R408C	321-634	84.65 k	⅛ w		Prec	¼%	
R408D	321-635	178.7 k	⅛ w		Prec	¼%	
R409	321-193	1 k	⅛ w		Prec	1%	
R410	301-204	200 k	½ w			5%	
R412[4]	311-273	10 k		Var			B VARIABLE
R414	311-074	5 k		Var			'B' DIGITAL GAIN
R430	311-310	5 k		Var			A POSITION
R439	311-310	5 k		Var			A GAIN
R450	311-310	5 k		Var			B POSITION
R459	311-310	5 k		Var			B GAIN
R462	321-289	10.0 k	⅛ w		Prec	1%	
R691	301-473	47 k	½ w			5%	

[3] See footnote page 6-19.

Switches

	Wired	Unwired		
SW180[1]	311-423			A FAST RT-LOW NOISE
SW240[2]	311-423			B FAST RT-LOW NOISE
SW260	260-550	*262-610	Rotary	A MV/DIV
SW280	260-550	*262-610	Rotary	B MV/DIV
SW355	260-447		Slide	A NORM-INV

[1] SW180 and R116 furnished as a unit.

[2] SW240 and R146 furnished as a unit.

Switches *(Cont'd)*

Ckt. No.	Tektronix Part No. Wired	Tektronix Part No. Unwired	Description	S/N Range
SW415	260-447		Slide	B NORM-INV
SW580	260-549	*262-619	Rotary	Mode
SW605	260-324		Push Button	TRACE FINDER
SW685[3]	311-273			A CALIB
SW690[4]	311-273			B CALIB

Electron Tubes

V114	154-195	6922
V144	154-195	6922

GATE GENERATOR Series A

Ckt. No.	Tektronix Part No.	Description			Model No.
	*605-017	Complete Board			

Capacitors

C161	281-513	27 pf	Cer	500 v	
C162	281-513	27 pf	Cer	500 v	
C200	281-518	47 pf	Cer	500 v	
C202	281-536	.001 μf	Cer	500 v	10%
C203	283-065	.001 μf	Cer	100 v	5%
C209	281-580	470 pf	Cer	500 v	10%
C217	283-024	.1 μf	Cer	30 v	
C221	281-513	27 pf	Cer	500 v	
C222	281-513	27 pf	Cer	500 v	

Diodes

D200	*152-115	Snap-off, pretested
D202	152-071	Germanium ED2007
D207	152-071	Germanium ED2007
D212	152-071	Germanium ED2007
D216	152-071	Germanium ED2007

Inductors

L160	*108-181	.2 μh
L220	*108-181	.2 μh

[3] SW685 and R352 furnished as a unit.

[4] SW690 and R412 furnished as a unit.

Connector

Ckt. No.	Tektronix Part No.	Description				Model No.
P21	131-218	Connector, 22 pin				

Transformers

Q200	151-083	2N964				
Q214	151-015	2N1516				

Resistors

R160	315-101	100 Ω	¼ w			5%
R165	315-102	1 k	¼ w			5%
R167	315-102	1 k	¼ w			5%
R168	315-333	33 k	¼ w			5%
R169	311-078	50 k		Var		'A' BRIDGE VOLTS
R171	322-469	750 k	¼ w		Prec	1%
R172	321-440	374 k	⅛ w		Prec	1%
R174	321-625	5.88 k	⅛ w		Prec	1%
R175	311-171	5 k		Var		'A' RISETIME BAL
R176	321-625	5.88 k	⅛ w		Prec	1%
R178	321-423	249 k	⅛ w		Prec	1%
R181	315-562	5.6 k	¼ w			5%
R183	316-334	330 k	¼ w			
R185	311-382	1 meg		Var		'A' BRIDGE BAL
R187	321-222	2 k	⅛ w		Prec	1%
R189	315-562	5.6 k	¼ w			5%
R202	315-102	1 k	¼ w			5%
R204	304-271	270 Ω	1 w			
R205	311-380	500 Ω		Var	WW	SNAP-OFF CURRENT
R207	315-222	2.2 k	¼ w			5%
R209	315-271	270 Ω	¼ w			5%
R213	315-622	6.2 k	¼ w			
R215	311-329	50 k		Var		MEMORY GATE WIDTH
R216	315-621	620 Ω	¼ w			5%
R217	315-100	10 Ω	¼ w			5%
R220	315-101	100 Ω	¼ w			5%
R225	315-102	1 k	¼ w			5%
R227	315-102	1 k	¼ w			5%
R228	315-563	56 k	¼ w			5%
R231	322-469	750 k	¼ w		Prec	1%
R232	321-440	374 k	⅛ w		Prec	1%
R234	321-625	5.88 k	⅛ w		Prec	1%
R235	311-171	5 k		Var		'B' RISETIME BAL
R236	321-625	5.88 k	⅛ w		Prec	1%
R238	321-423	249 k	⅛ w		Prec	1%

Resistors *(Cont'd)*

Ckt. No.	Tektronix Part No.	Description					Model No.
R241	315-562	5.6 k	¼ w			5%	
R243	316-334	330 k	¼ w				
R245	311-382	1 meg		Var			'B' BRIDGE BAL
R247	321-222	2 k	⅛ w		Prec	1%	
R249	315-562	5.6 k	¼ w			5%	

Transformers

T160	*120-316	Toroid, 4T
T200	*120-314	Toroid, 4T - 2T
T220	*120-316	Toroid, 4T

MEMORY (2 required) Series B

	*605-018	Complete Board

Capacitors

C306	283-026	.2 μf	Cer	25 v	
C315	283-581	510 pf	Mica	300 v	5%
C325	283-026	.2 μf	Cer	25 v	
C332	283-068	.01 μf	Cer	500 v	
C365	281-504	10 pf	Cer	500 v	10%
C373	283-004	.02 μf	Disc Type	150 v	
C375	283-579	100 pf	Mica	500 v	5%
C383	290-026	5 μf	EMT	25 v	
C385	290-106	10 μf	EMT	15 v	
C386	283-004	.02 μf	Disc Type	150 v	

Diodes

D324	152-016	Zener RT-6
D330	152-071	Germanium ED2007
D332	152-071	Germanium ED2007
D342 } D343 }	*152-145	Matched pair
D362	152-008	Germanium T12G
D372	152-008	Germanium T12G

Connectors

P22	131-218	Connector, 22 pin
P23	131-218	Connector, 22 pin

Transistors

Ckt. No.	Tektronix Part No.	Description				Model No.
Q304	151-085	2N741				
Q313	151-085	2N741				
Q364	151-103	Planar Silicon				
Q374	151-103	Planar Silicon				

Resistors

R301	301-185	1.8 meg	½ w			5%
R304	301-303	30 k	½ w			5%
R306	315-100	10 Ω	¼ w			5%
R312	321-335	30.1 k	⅛ w		Prec	1%
R313	311-066	500 Ω	.2 w	Var		LOOP GAIN
R315	315-101	100 Ω	¼ w			5%
R323	301-683	68 k	½ w			5%
R324	315-823	82 k	¼ w			5%
R326	301-363	36 k	½ w			5%
R328	315-202	2 k	¼ w			5%
R329	315-202	2 k	¼ w			5%
R334	315-221	220 Ω	¼ w			5%
R335	311-328	1 k		Var		SMOOTHING BALANCE
R336	301-303	30 k	½ w			5%
R339	315-621	620 Ω	¼ w			5%
R351	315-101	100 Ω	¼ w			5%
R353	301-473	47 k	½ w			5%
R362	315-223	22 k	¼ w			5%
R364	301-563	56 k	½ w			5%
R374	301-333	33 k	½ w			5%
R385	315-470	47 Ω	¼ w			5%
R386	307-053	3.3 Ω	½ w			5%

Transformer

T339	*120-313	Toroid, 25T

Electron Tube

V353	154-417	8056

INVERTER Series C

	*605-019	Complete Board

Diodes

Ckt. No.	Tektronix Part No.	Description				Model No.
D424	152-060	Zener	1M20Z10/1N3027A		20 v	
D444	152-060	Zener	1M20Z10/1N3027A		20 v	

Connector

P24	131-218	Connector, 22 pin

Transistors

Q424	151-103	Planar Silicon
Q434	*153-522	Tek Spec, checked
Q444	151-103	Planar Silicon
Q454	*153-522	Tek Spec, checked

Resistors

R420	316-394	390 k	¼ w			
R421	311-110	100 k		Var		'A' INVERTER ZERO
R422	301-364	360 k	½ w			5%
R424	303-153	15 k	1 w			5%
R426	301-393	39 k	½ w			5%
R427	321-631	12.5 k	⅛ w		Prec	1%
R429	321-297	12.1 k	⅛ w		Prec	1%
R431	315-912	9.1 k	¼ w			5%
R432	315-912	9.1 k	¼ w			5%
R434	303-183	18 k	1 w			5%
R435	321-631	12.5 k	⅛ w		Prec	1%
R438	315-103	10 k	¼ w			5%
R440	316-394	390 k	¼ w			
R441	311-110	100 k		Var		'B' INVERTER ZERO
R442	301-364	360 k	½ w			5%
R444	303-153	15 k	1 w			5%
R446	301-393	39 k	½ w			5%
R447	321-631	12.5 k	⅛ w		Prec	1%
R449	321-297	12.1 k	⅛ w		Prec	1%
R451	315-912	9.1 k	¼ w			5%
R452	315-912	9.1 k	¼ w			5%
R454	303-183	18 k	1 w			5%
R455	321-631	12.5 k	⅛ w		Prec	1%
R458	315-103	10 k	¼ w			5%

DUAL TRACE Series D

Ckt. No.	Tektronix Part No.	Description				Model No.
	*605-020	Complete Board				

Capacitors

C544	281-546	330 pf	Cer	500 v	10%	
C547	281-523	100 pf	Cer	350 v		
C557	281-523	100 pf	Cer	350 v		
C572	281-518	47 pf	Cer	500 v		
C574	281-523	100 pf	Cer	350 v		
C577	283-068	.01 μf	Cer	500 v		

Diodes

D515	152-141	1N3605				
D516	152-141	1N3605				
D525	152-141	1N3605				
D526	152-141	1N3605				
D547	152-008	Germanium T12G				
D557	152-008	Germanium T12G				
D571	152-071	Germanium ED2007				
D574	152-008	Germanium T12G				

Connector

P25	131-218	Connector, 22 pin				

Transistors

Q514	151-076	2N2048				
Q524	151-076	2N2048				
Q545	151-071	2N1305				
Q555	151-071	2N1305				
Q564	151-040	2N1302				
Q570	151-063	PADT 35				

Resistors

R513	321-277	7.5 k	1/8 w	Prec	1%	
R514	323-351	44.2 k	1/2 w	Prec	1%	
R519	323-433	316 k	1/2 w	Prec	1%	
R523	321-277	7.5 k	1/8 w	Prec	1%	
R524	323-351	44.2 k	1/2 w	Prec	1%	

Resistors *(Cont'd)*

Ckt. No.	Tektronix Part No.	Description				Model No
R541	315-562	5.6 k	¼ w		5%	
R544	301-821	820 Ω	½ w		5%	
R545	303-223	22 k	1 w		5%	
R546	315-124	120 k	¼ w		5%	
R547	315-223	22 k	¼ w		5%	
R548	315-223	22 k	¼ w		5%	
R549	301-683	68 k	½ w		5%	
R551	315-562	5.6 k	¼ w		5%	
R555	303-223	22 k	1 w		5%	
R556	315-124	120 k	¼ w		5%	
R557	315-223	22 k	¼ w		5%	
R558	315-223	22 k	¼ w		5%	
R559	301-683	68 k	½ w		5%	
R561	315-223	22 k	¼ w		5%	
R564	301-563	56 k	½ w		5%	
R565	315-222	2.2 k	¼ w		5%	
R567	315-152	1.5 k	¼ w		5%	
R570	301-153	15 k	½ w		5%	
R571	316-474	470 k	¼ w			
R572	315-103	10 k	¼ w		5%	
R574	315-222	2.2 k	¼ w		5%	
R577	315-101	100 Ω	¼ w		5%	

Transformer

T570	*120-315	Toroid, 4T - 10T - 15T				

VERTICAL AMPLIFIER Series E

	*605-021	Complete Board				

Capacitors

C614	283-026	.2 μf	Cer	25 v		
C619	281-501	4.7 pf	Cer	500 v	±1 pf	
C621	283-068	.01 μf	Cer	500 v		
C642	290-199	1 μf	EMT	150 v		
C654	290-159	2 μf	EMT	150 v		
C662	283-068	.01 μf	Cer	500 v		

Diodes

D612	152-107	Silicon	T160			
D615	152-100	Zener	1M120Z5/1N3046B	120 v		
D632	152-008	Germanium	T12G			
D672	152-008	Germanium	T12G			

Connector

Ckt. No.	Tektronix Part No.	Description	Model No.
P26	131-218	Connector, 22 pin	

Transistors

Q614	151-103	Planar Silicon				
Q624	*153-521	Tek Spec, checked				
Q634	*153-521	Tek Spec, checked				
Q654	151-103	Planar Silicon				
Q664	*153-521	Tek Spec, checked				
Q674	*153-522	Tek Spec, checked				

Resistors

R607	315-392	3.9 k	¼ w			5%
R608	315-102	1 k	¼ w			5%
R610	301-433	43 k	½ w			5%
R611	311-326	10 k		Var		VERT CENTERING
R619	323-389	110 k	½ w		Prec	1%
R621	315-472	4.7 k	¼ w			5%
R624	304-473	47 k	1 w			
R639	315-101	100 Ω	¼ w			5%
R642	303-103	10 k	1 w			5%
R651	323-389	110 k	½ w		Prec	1%
R661	301-823	82 k	½ w			5%
R662	315-222	2.2 k	¼ w			5%
R664	304-473	47 k	1 w			
R676	301-124	120 k	½ w			5%
R677	323-389	110 k	½ w		Prec	1%
R678	323-394	124 k	½ w		Prec	1%
R679	315-101	100 Ω	¼ w			5%

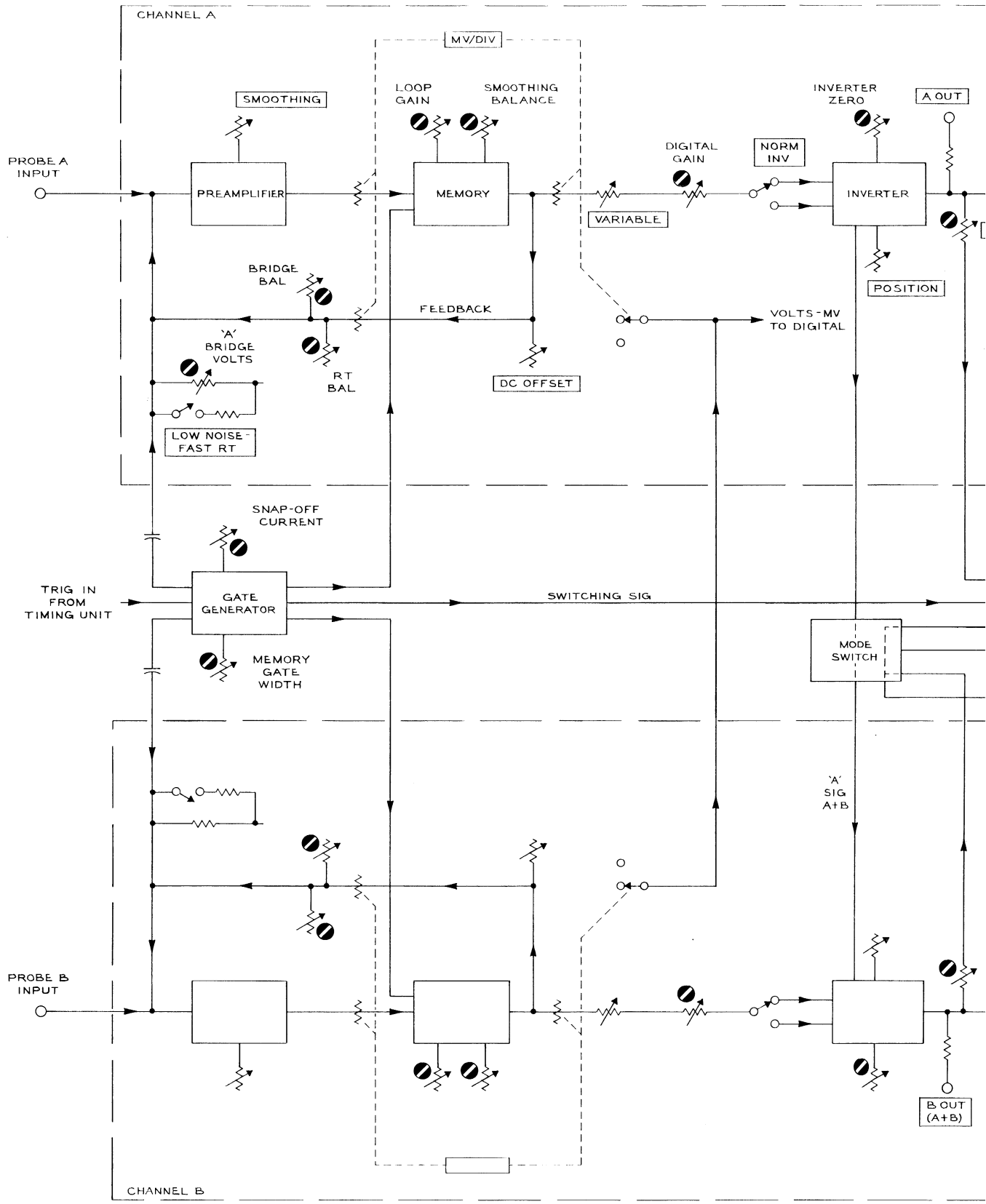
CHANNEL A
MV/DIV
SMOOTHING
LOOP GAIN
SMOOTHING BALANCE
INVERTER ZERO
A OUT
PROBE A INPUT
PREAMPLIFIER
MEMORY
DIGITAL GAIN
NORM INV
INVERTER
VARIABLE
POSITION
BRIDGE BAL
FEEDBACK
VOLTS-MV TO DIGITAL
'A' BRIDGE VOLTS
RT BAL
DC OFFSET
LOW NOISE-FAST RT
SNAP-OFF CURRENT
TRIG IN FROM TIMING UNIT
GATE GENERATOR
SWITCHING SIG
MODE SWITCH
MEMORY GATE WIDTH
'A' SIG A+B
PROBE B INPUT
B OUT (A+B)
CHANNEL B

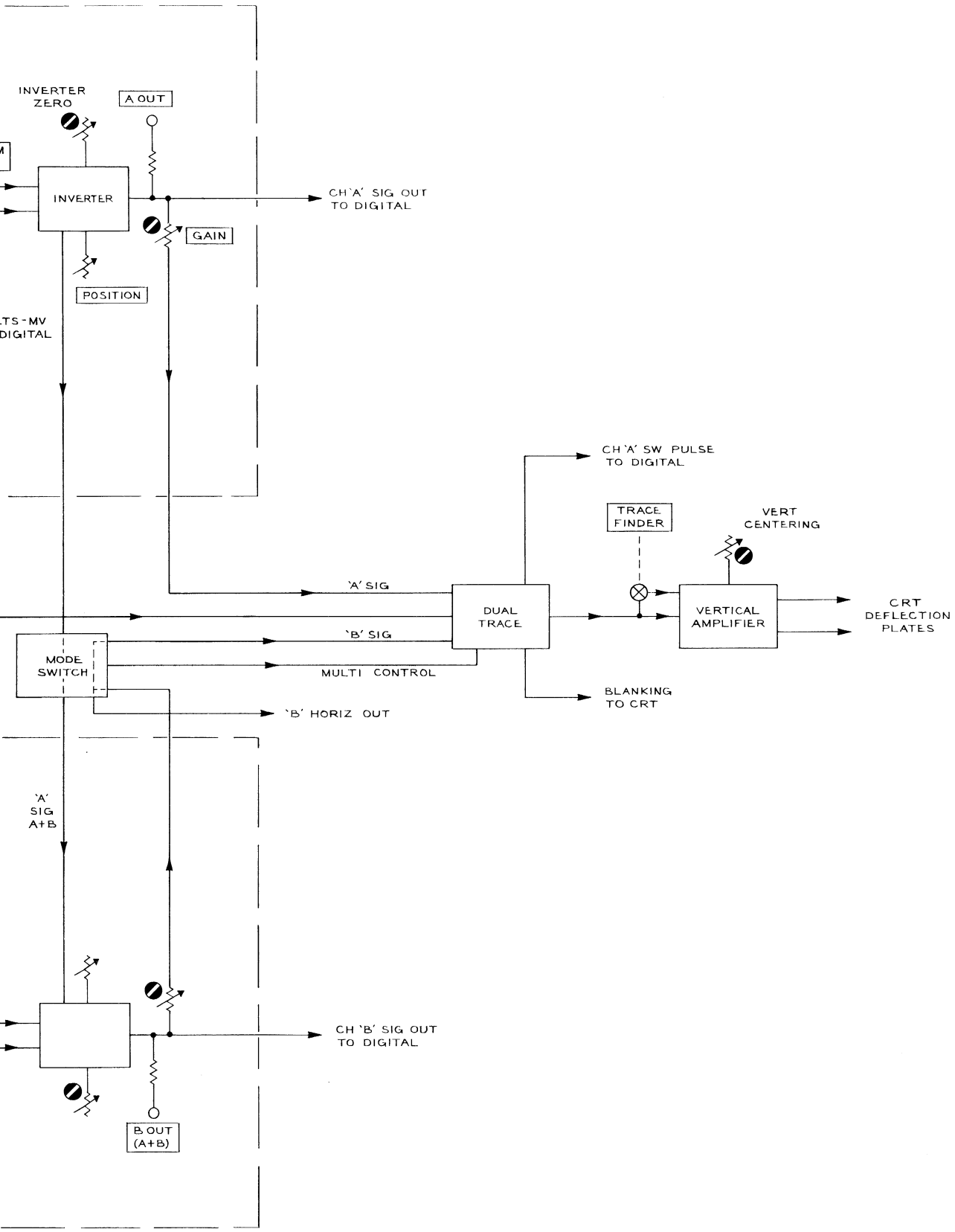

CMD 863

A

BLOCK DIAGRAM

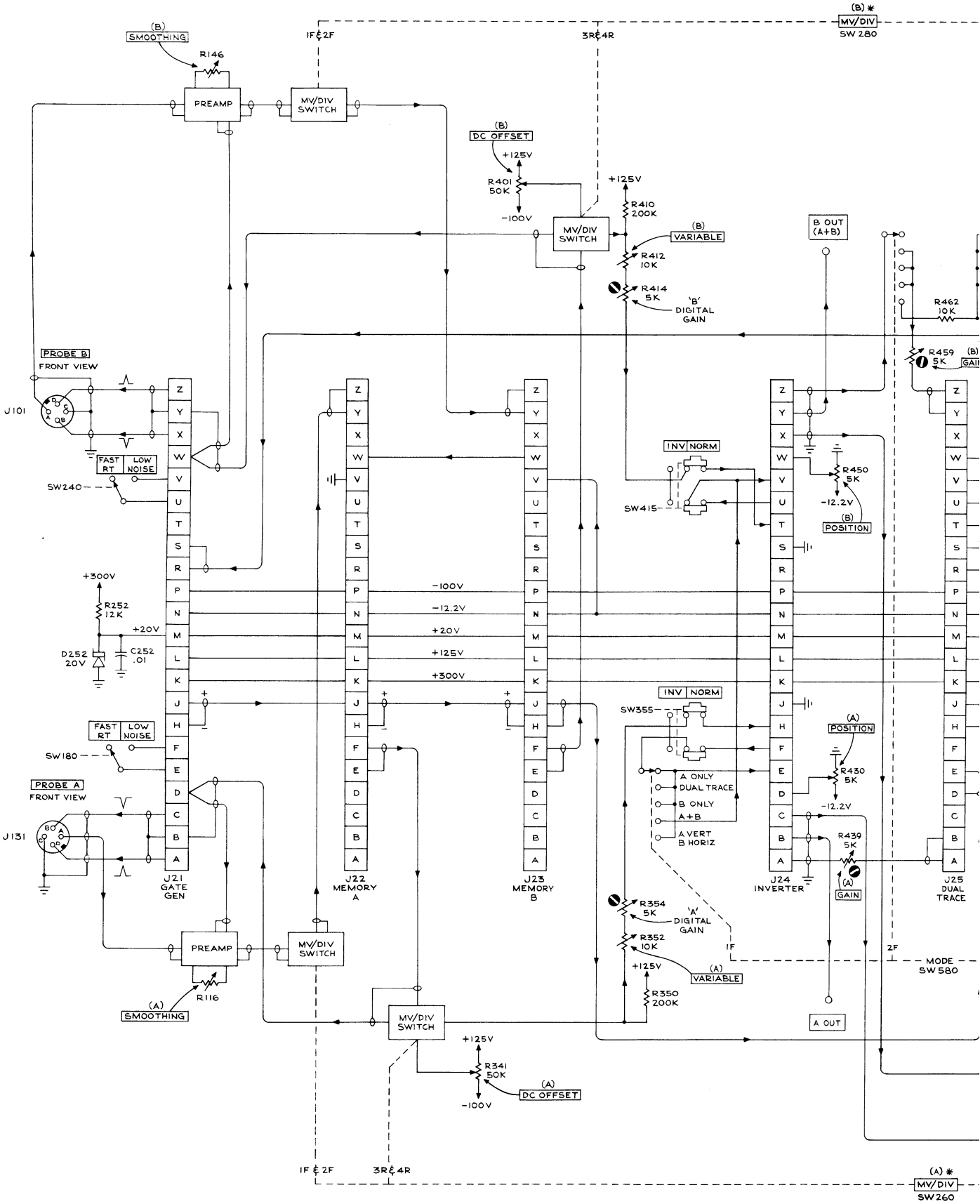
(B) SMOOTHING
R146
PREAMP
MV/DIV SWITCH
1F & 2F
3R & 4R
(B) * MV/DIV SW 280
(B) DC OFFSET
+125V
R401 50K
-100V
R410 200K
(B) VARIABLE
R412 10K
R414 5K
'B' DIGITAL GAIN
B OUT (A+B)
R462 10K
R459 5K
(B) GAIN
PROBE B FRONT VIEW
J101
FAST RT
LOW NOISE
SW240
INV NORM
SW415
R450 5K
-12.2V
(B) POSITION
+300V
R252 12K
+20V
D252 20V
C252 .01
-100V
-12.2V
+20V
+125V
+300V
SW355
(A) POSITION
R430 5K
A ONLY
DUAL TRACE
B ONLY
A+B
A VERT B HORIZ
R439 5K
(A) GAIN
SW180
PROBE A FRONT VIEW
J131
J21 GATE GEN
J22 MEMORY A
J23 MEMORY B
J24 INVERTER
J25 DUAL TRACE
R354 5K
'A' DIGITAL GAIN
R352 10K
(A) VARIABLE
R350 200K
A OUT
MODE SW 580
(A) SMOOTHING
R116
R341 50K
(A) DC OFFSET
(A) * MV/DIV SW 260

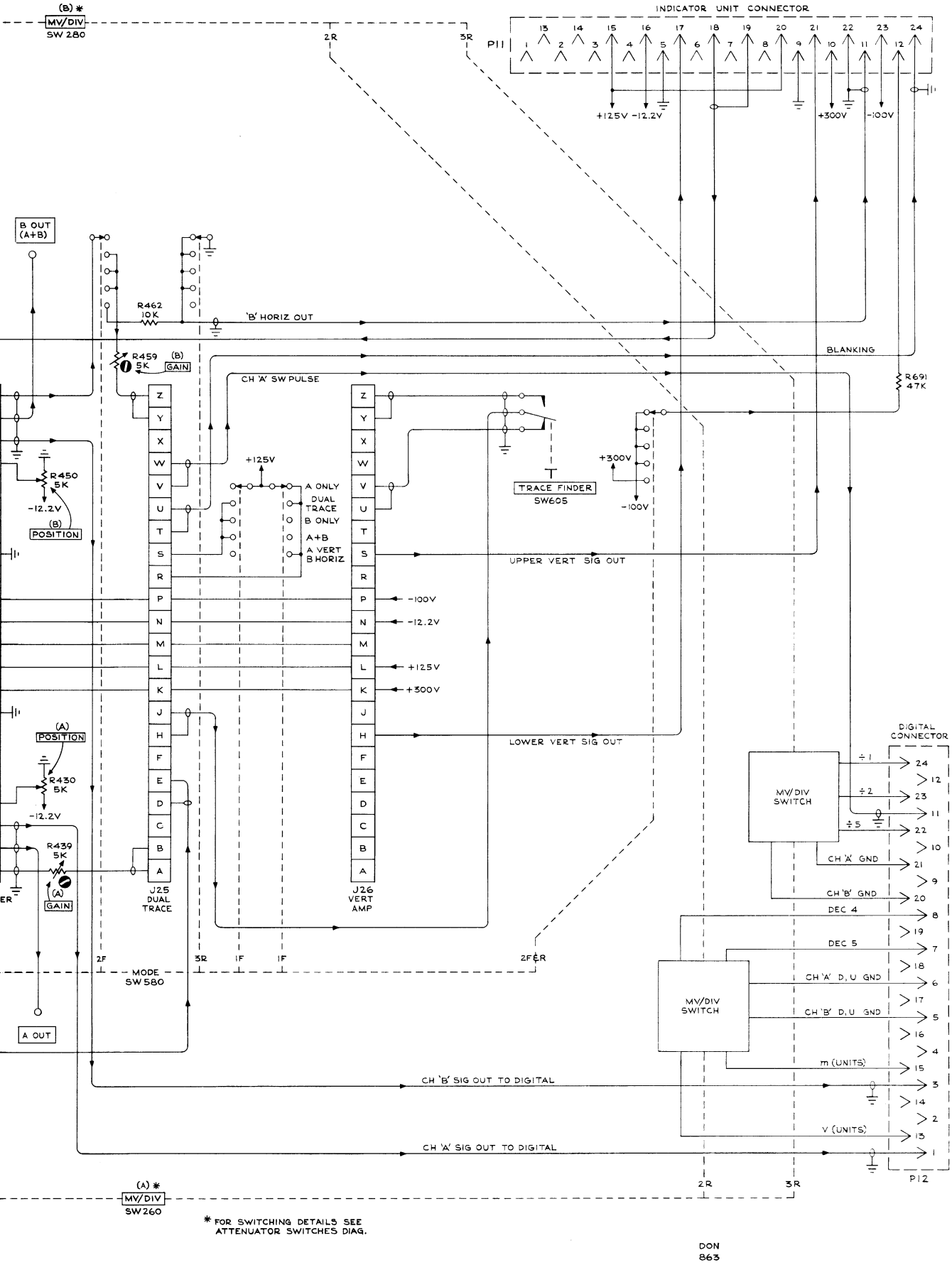

DON
863

A

INTERCONNECTOR DIAGRAM

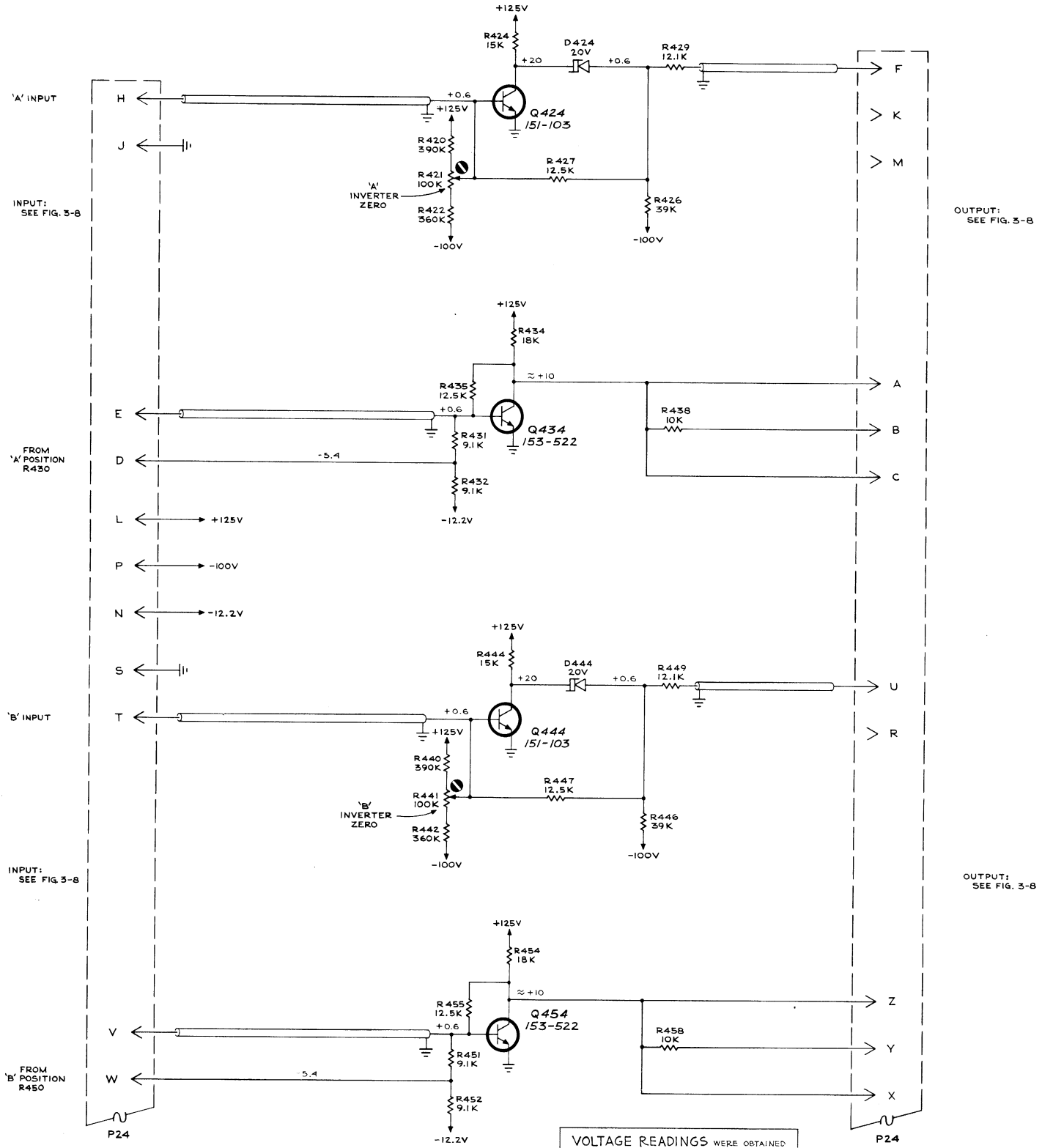

VOLTAGE READINGS WERE OBTAINED UNDER FOLLOWING CONDITIONS:	
CONTROLS	SETTINGS
NORM-INV	NORM
Trace	Centered

TYPE 3S3 PLUG-IN

A

DON 863

INVERTER
SERIES-C
MODEL-1

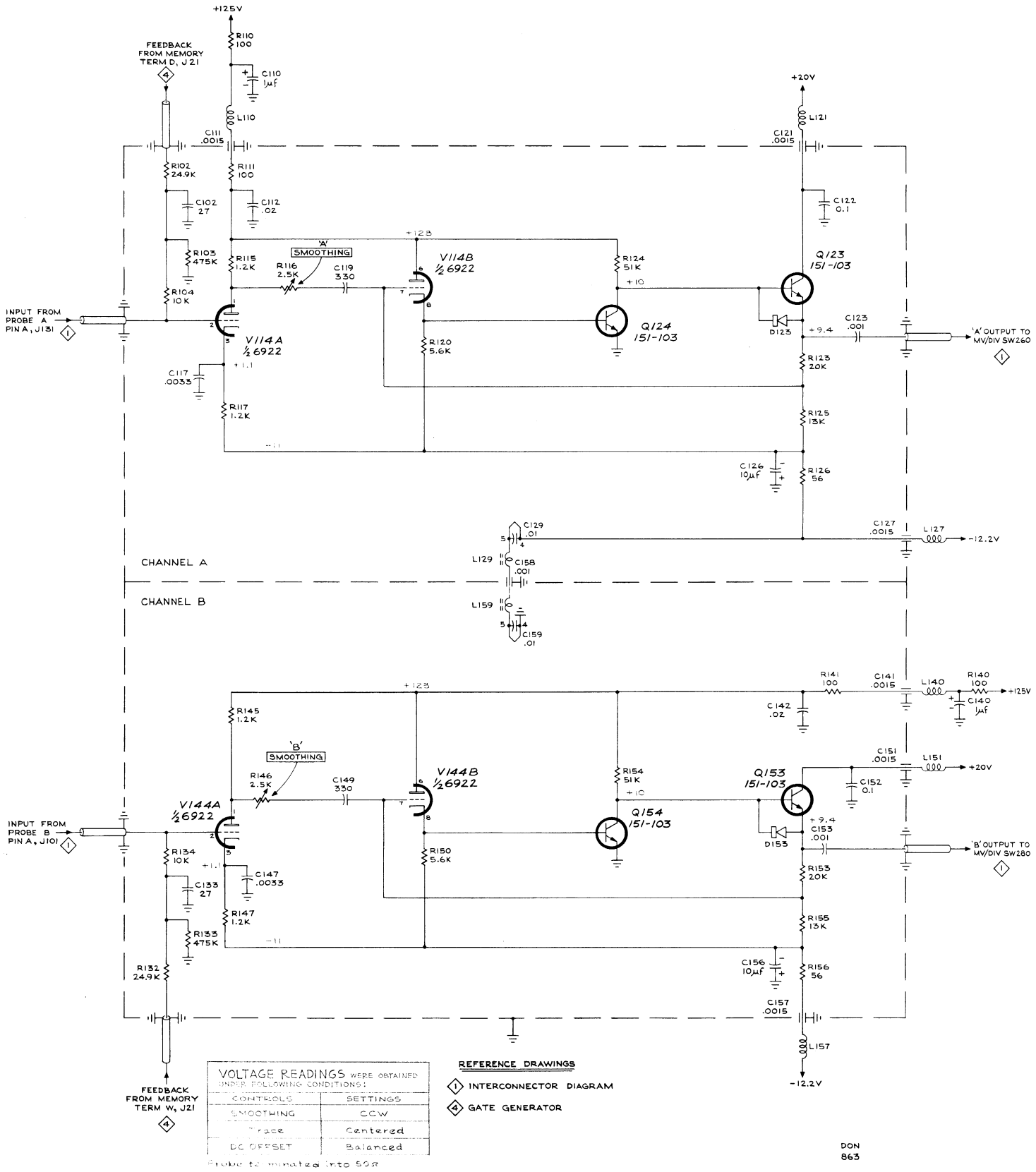

VOLTAGE READINGS WERE OBTAINED UNDER FOLLOWING CONDITIONS:	
CONTROLS	SETTINGS
SMOOTHING	CCW
Trace	Centered
DC OFFSET	Balanced

Probe terminated into 50Ω

REFERENCE DRAWINGS

1 INTERCONNECTOR DIAGRAM

4 GATE GENERATOR

DON 863

TYPE 3S3 PLUG-IN A PREAMPLIFIER

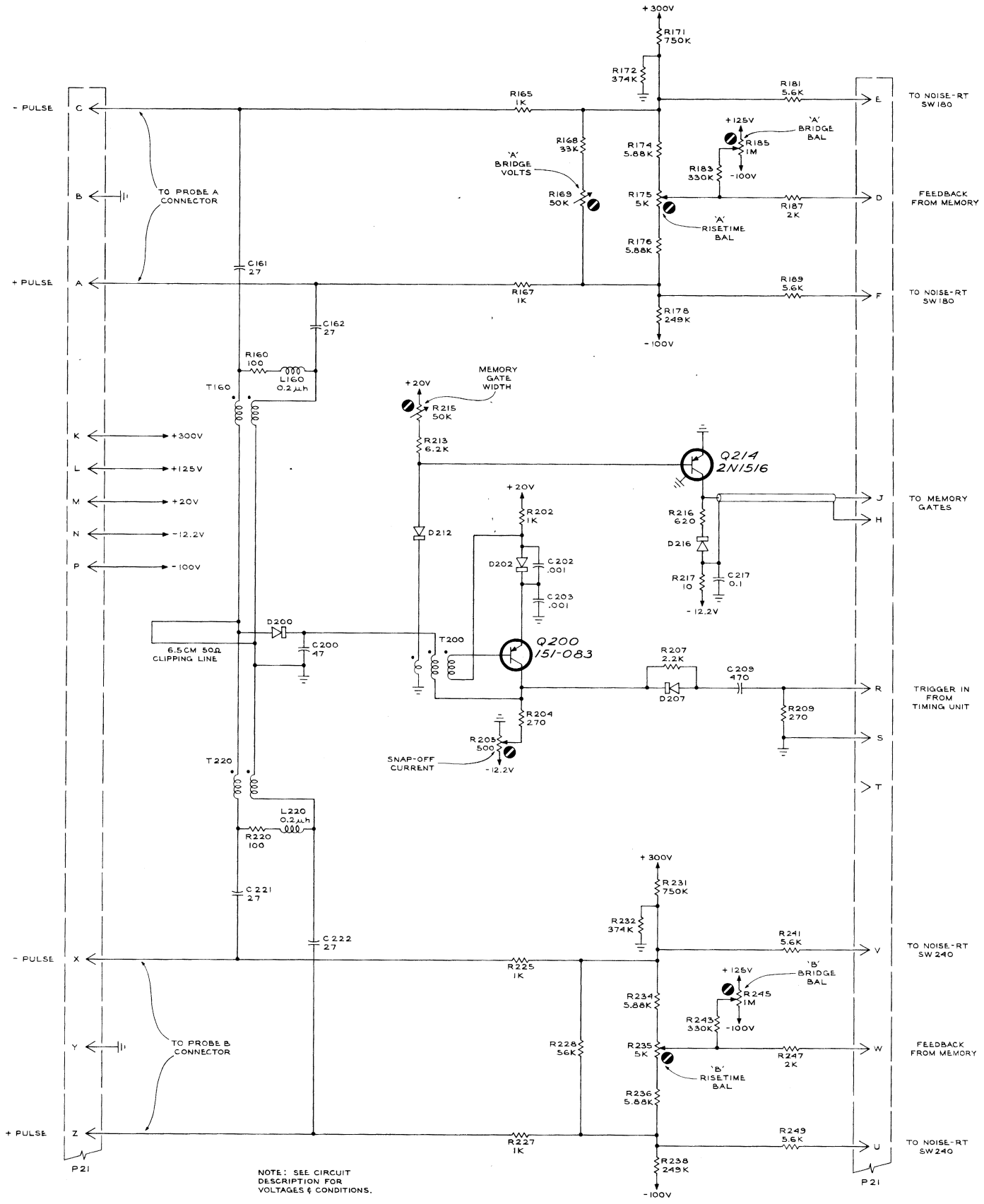

NOTE: SEE CIRCUIT DESCRIPTION FOR VOLTAGES & CONDITIONS.

CMD 863

TYPE 3S3 PLUG-IN

A

GATE GENERATOR

SERIES-A
MODEL-1

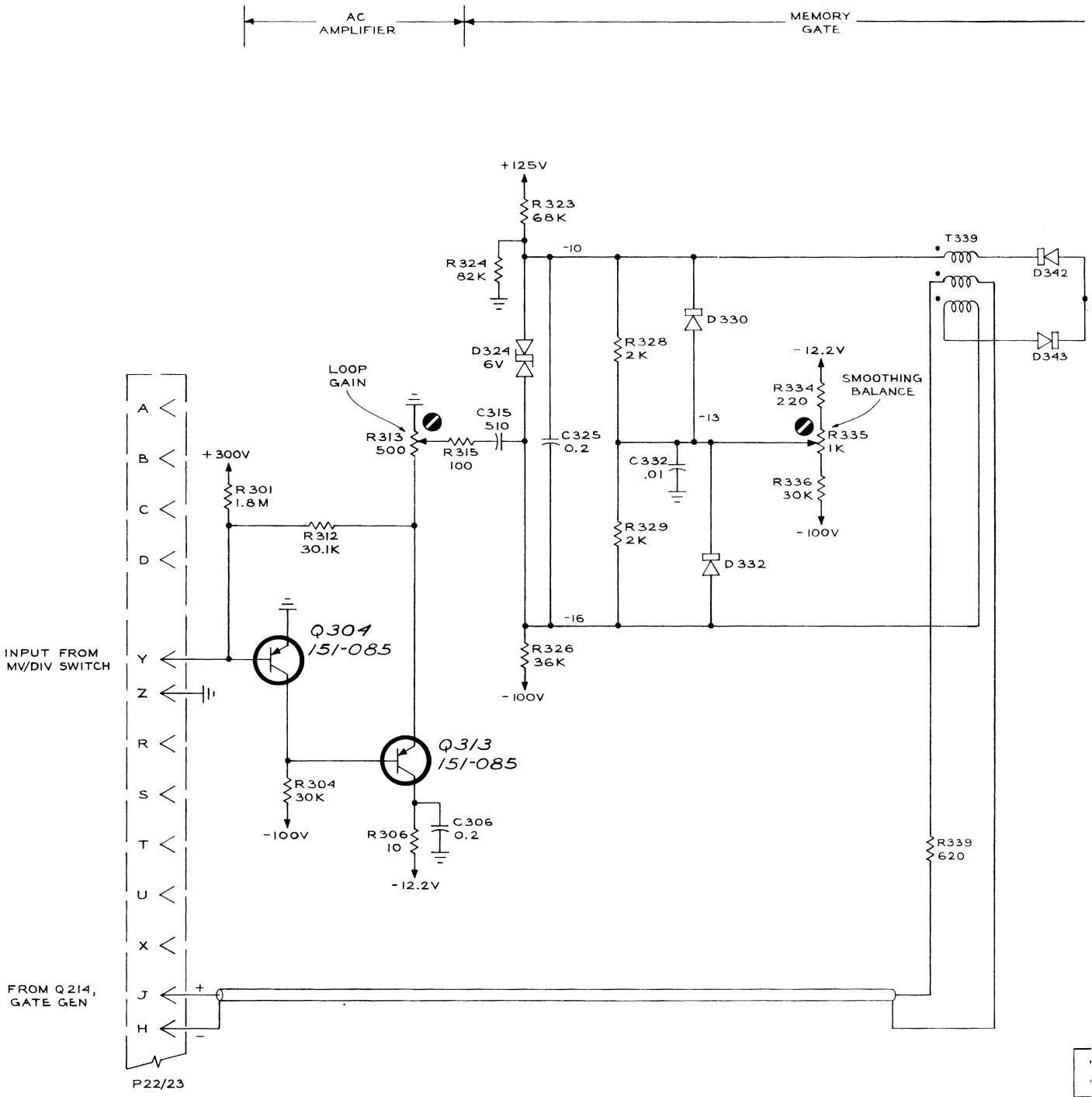

TYPE 3S3 PLUG-IN

A

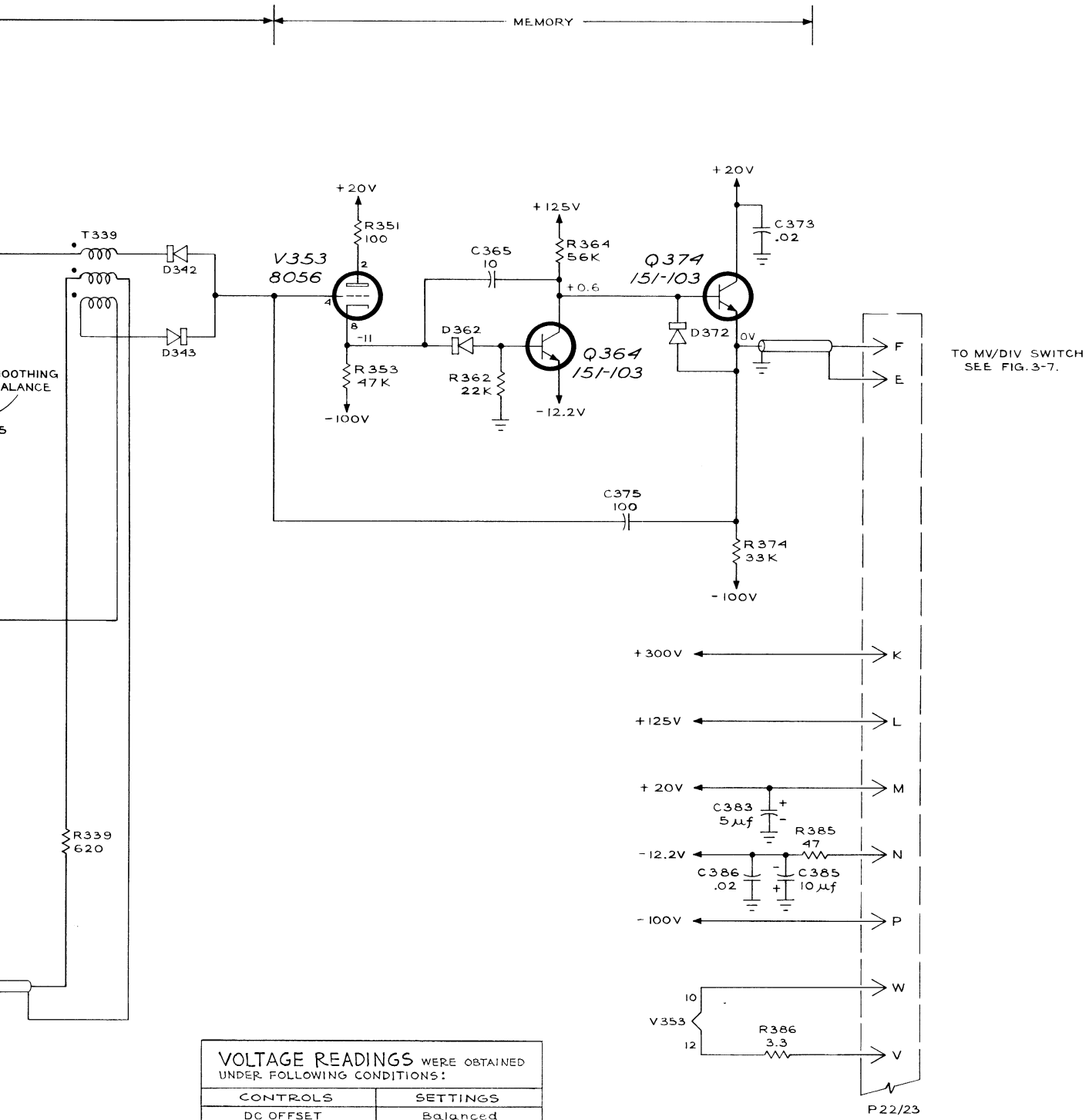

VOLTAGE READINGS WERE OBTAINED UNDER FOLLOWING CONDITIONS:	
CONTROLS	SETTINGS
DC OFFSET	Balanced
Trace	Centered

PROBE TERMINATED INTO 50Ω

A

CMD
863

MEMORY
SERIES-B
MODEL-1

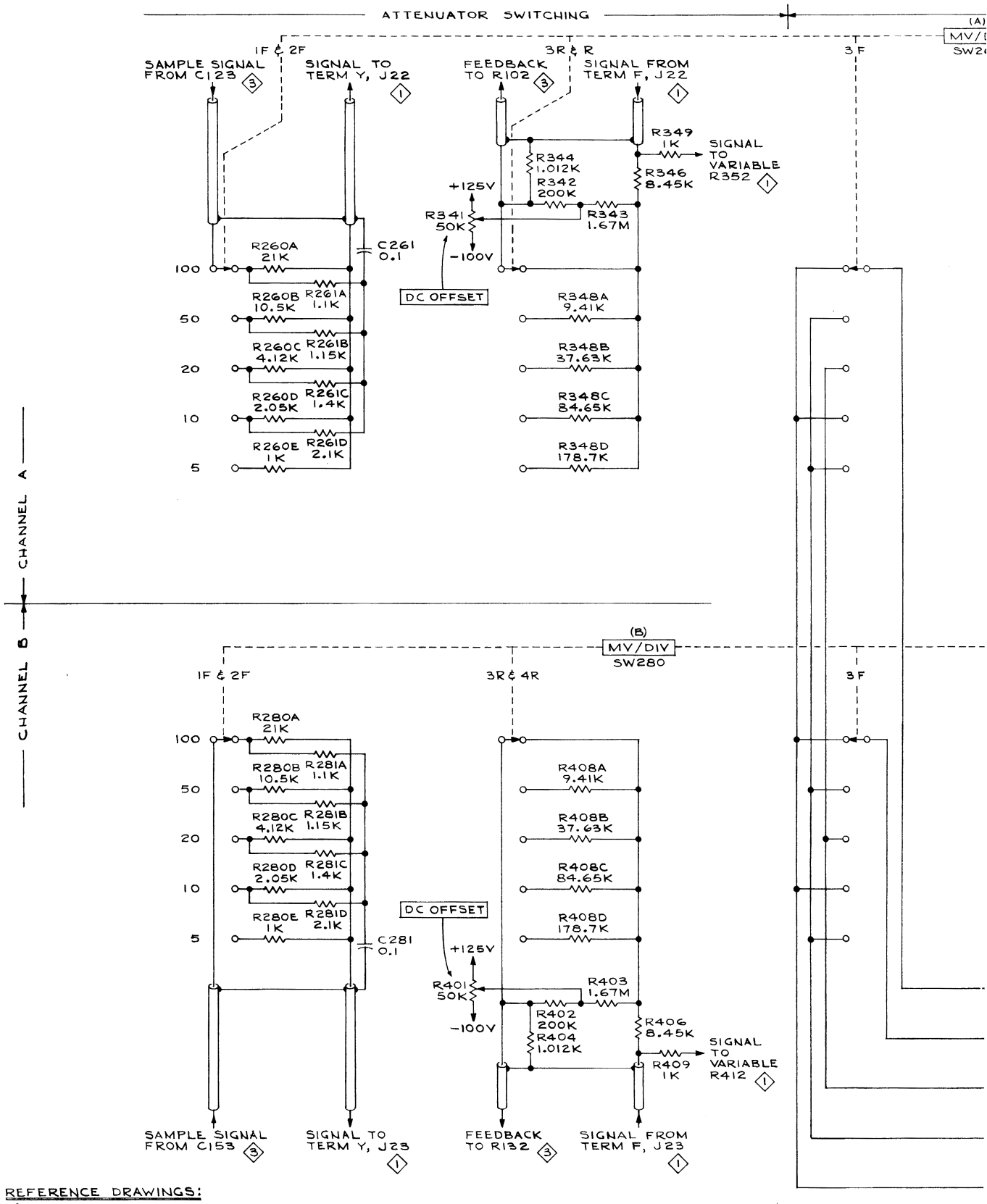

REFERENCE DRAWINGS:

1 INTERCONNECTOR DIAGRAM

3 PREAMPLIFIER

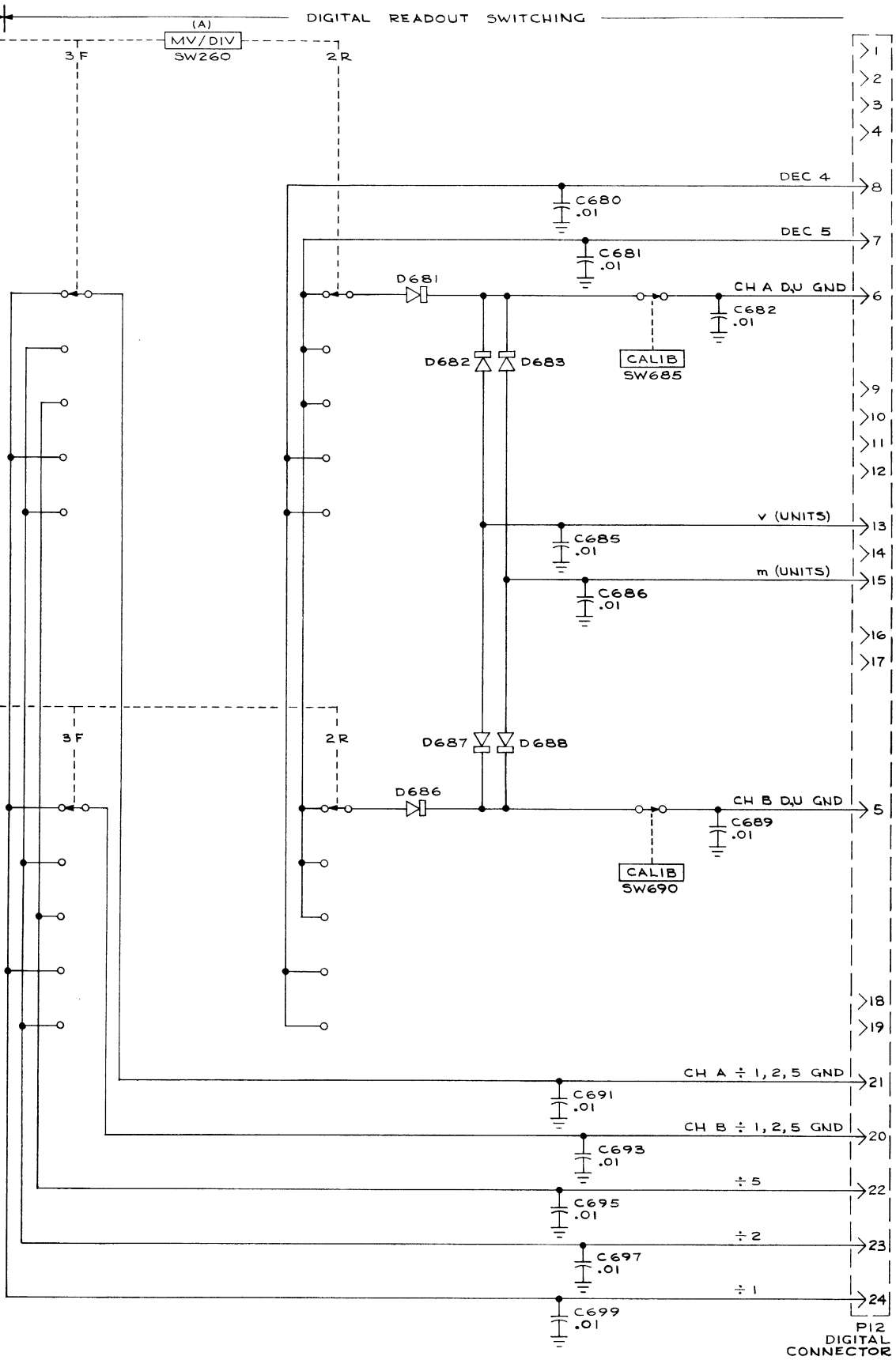

MRH
863

A

ATTENUATOR SWITCHING

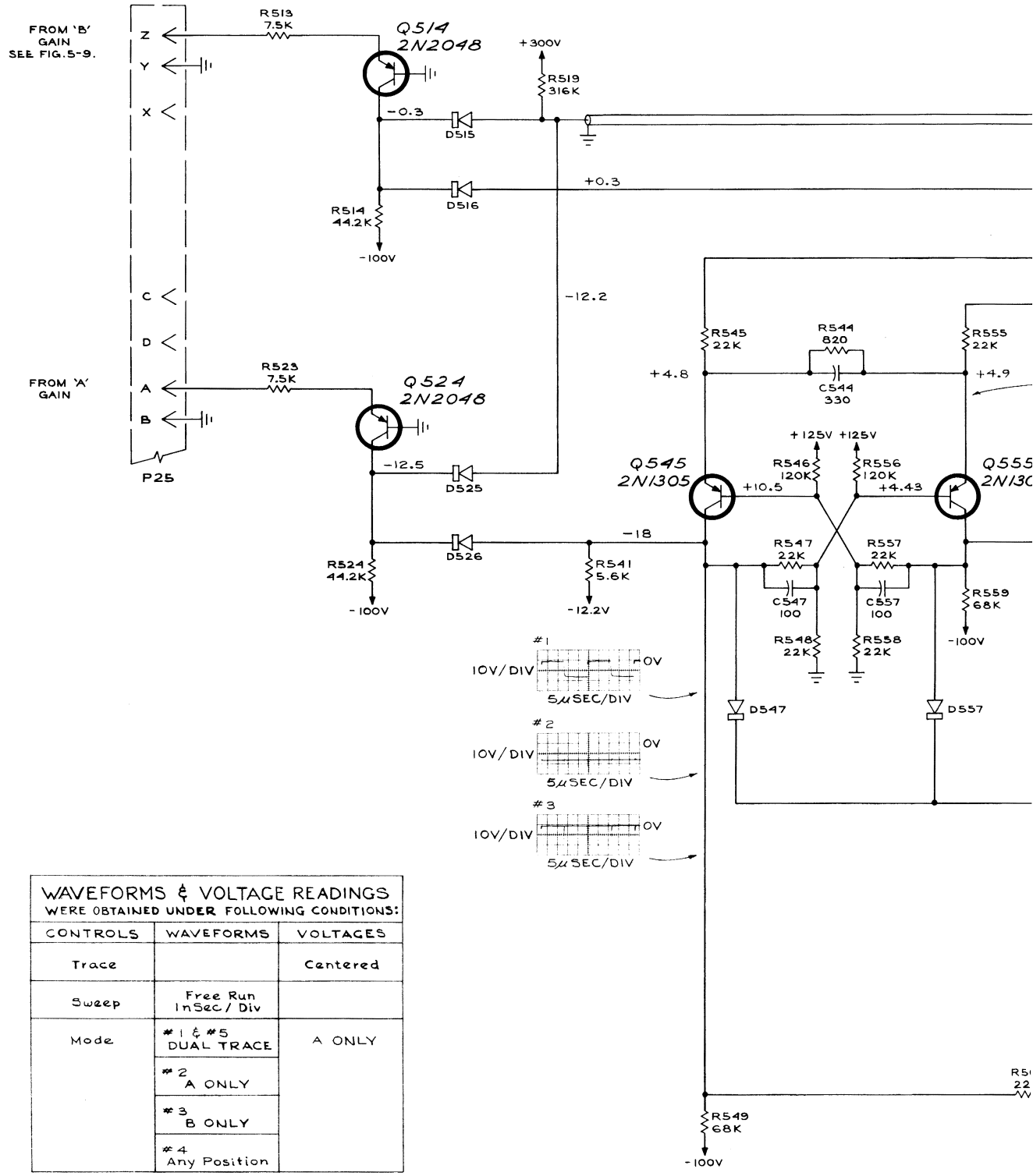

WAVEFORMS & VOLTAGE READINGS WERE OBTAINED UNDER FOLLOWING CONDITIONS:		
CONTROLS	WAVEFORMS	VOLTAGES
Trace		Centered
Sweep	Free Run In Sec / Div	
Mode	#1 & #5 DUAL TRACE	A ONLY
	#2 A ONLY	
	#3 B ONLY	
	#4 Any Position	

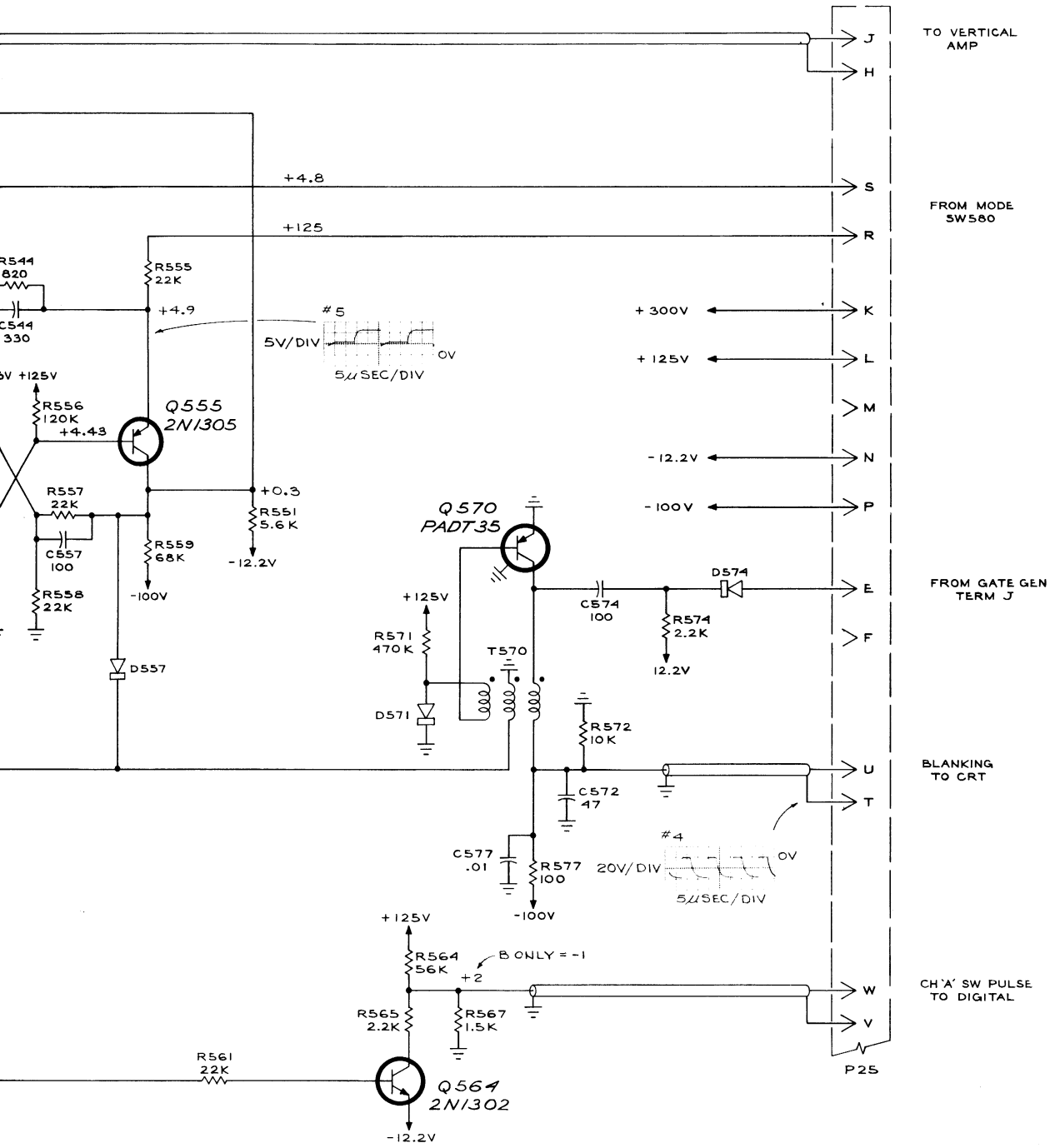

CMD 863

A

DUAL TRACE
SERIES-D
MODEL-1

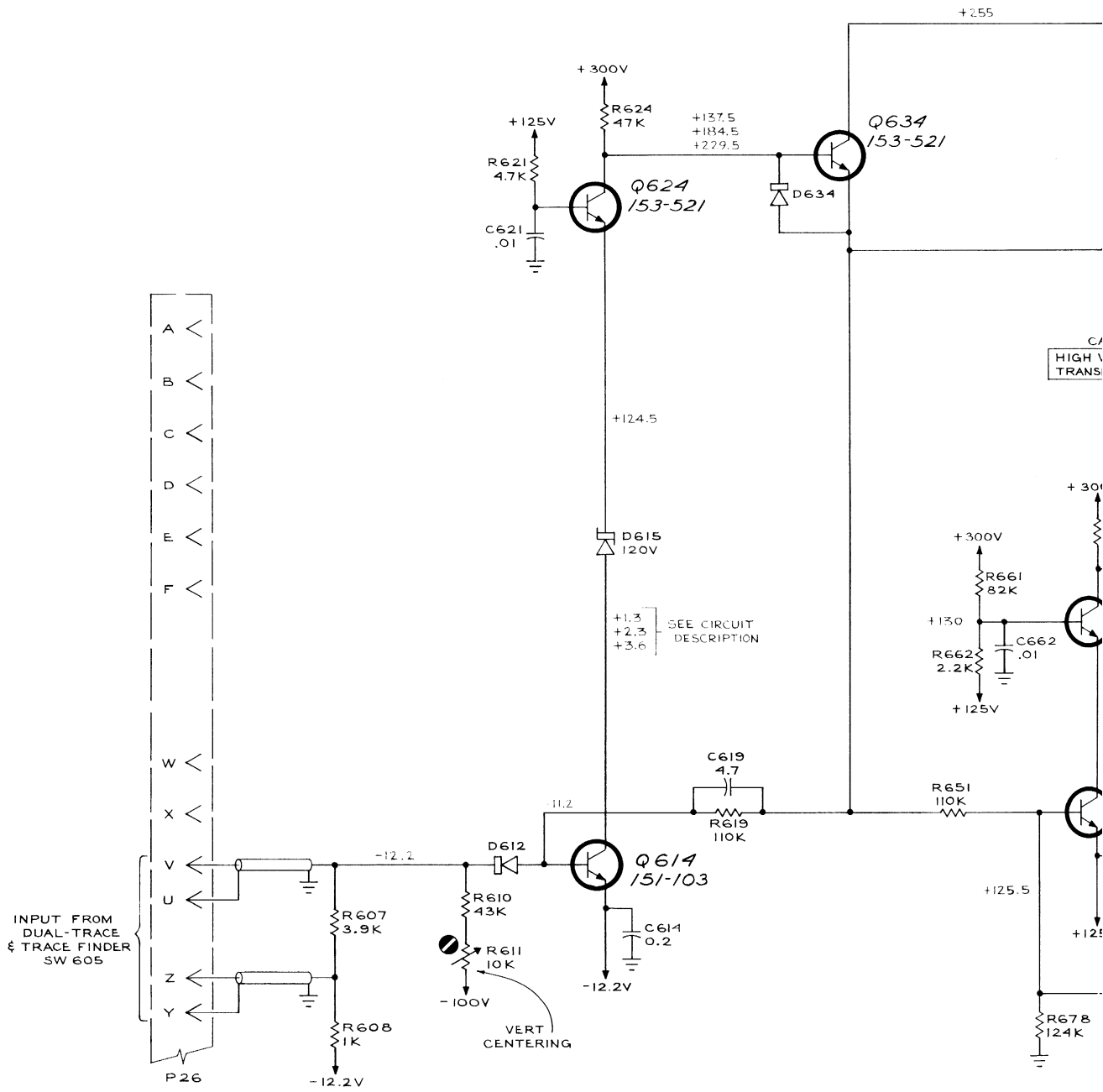

VOLTAGE READINGS WERE OBTAINED UNDER FOLLOWING CONDITIONS:			
CONTROLS	SETTINGS		
	UPPER	MID	LOWER
Trace	+4 div	centered	-4 div

TYPE 3S3 PLUG-IN

A

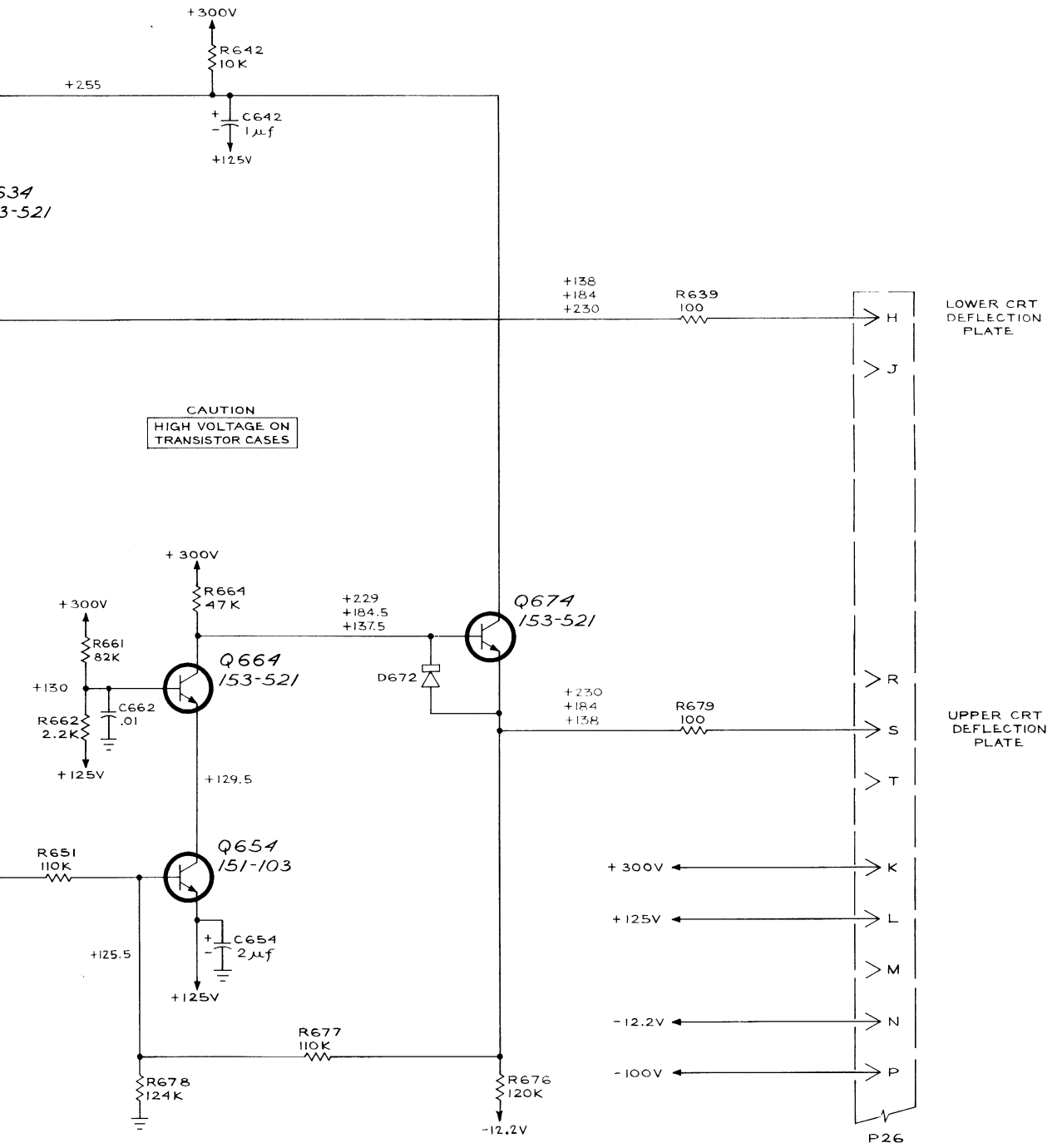

CMD
863

VERTICAL AMPLIFIER

SERIES-E
MODEL-1

A

TYPE 383 -- TENT. S/N 250

PARTS LIST CORRECTIONS

DUAL TRACE Series D

ADD:

R680*	308-298	560 Ω	3 w	WW	5%
R682**	308-230	2.7 k	3 w	WW	5%

* Added between pin 15 and pin 20 of connector P11.

** Added between pin 6 and pin 10 of connector P11.

TYPE 3S3 - TENT. S/N 170

PARTS LIST CORRECTION

CHANGE TO:

R115	315-222	2.2k	1/4w	5%
R127	315-432	4.3k	1/4w	5%
R145	315-222	2.2k	1/4w	5%
R157	315-432	4.3k	1/4w	5%

ADD:

R122	315-182	1.8k	1/4w	5%
R152	315-182	1.8k	1/4w	5%
R188	316-185	1.8 meg	1/4w	10%
R248	316-185	1.8 meg	1/4w	10%

SCHEMATIC CORRECTIONS

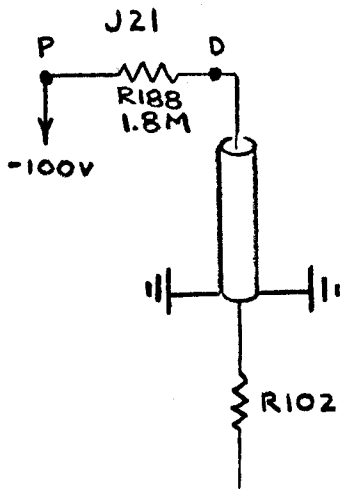

PREAMPLIFIER INPUT CHANGES

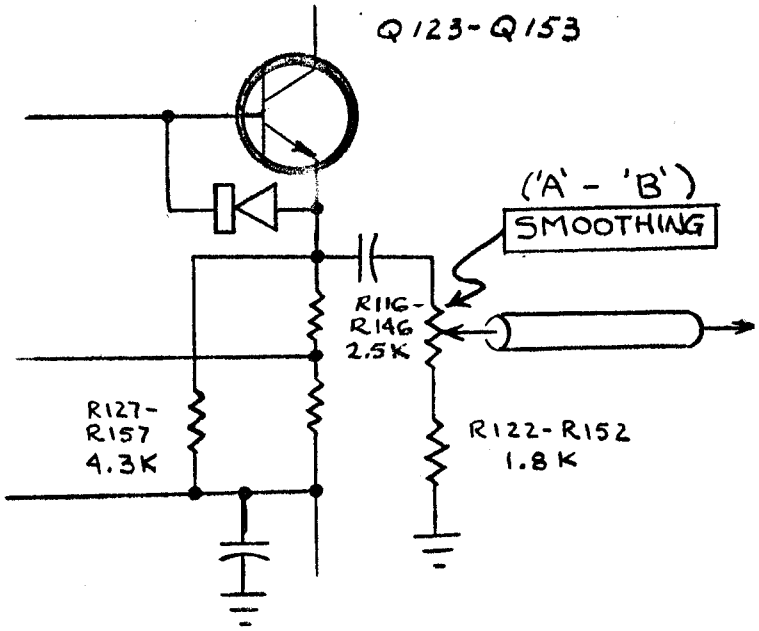

CHANGES IN 'A' AND 'B' PREAMPLIFIER OUTPUT

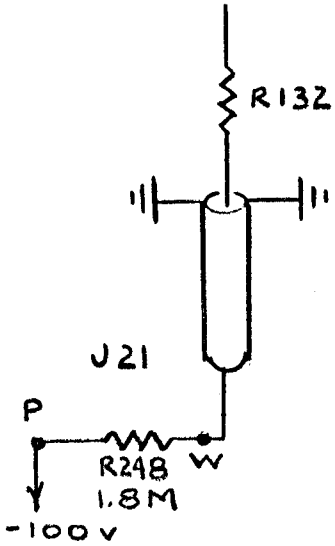

M7870/264

TYPE 3S3

PARTS LIST CORRECTIONS

CHANGE TO:

R252	308-023	10k	10w	ww	5%
R374	301-302	30k	1/2w	5%	(MEMORY BOARD)
R433	315-152	1.5k	1/4w	5%	(INVERTER BOARD)
R453	315-152	1.5k	1/4w	5%	(INVERTER BOARD)

ADD

R373	315-132	1.3k	1/4w	5%	(MEMORY BOARD)

PARTS LIST CORRECTIONS

CHANGE TO:

C200	281-504	10pf	Cer	500v	(GATE GENERATOR BOARD)
R124	301-223	22k	1/2w	5%	
R154	301-223	22k	1/2w	5%	
R204	308-231	220Ω	3w	5%	(GATE GENERATOR BOARD)

ADD:

R127	315-562	5.6k	1/4w	5%	
R157	315-562	5.6k	1/4w	5%	
R433	315-102	1k	1/4w	5%	(INVERTER BOARD)
R453	315-102	1k	1/4w	5%	(INVERTER BOARD)

SCHEMATIC CORRECTION

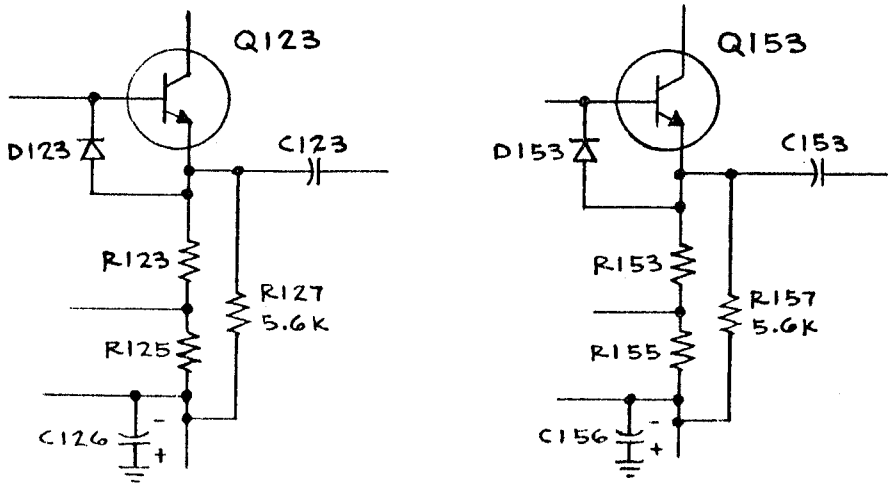

PART. PREAMP. DIAG.

SCHEMATIC CORRECTIONS

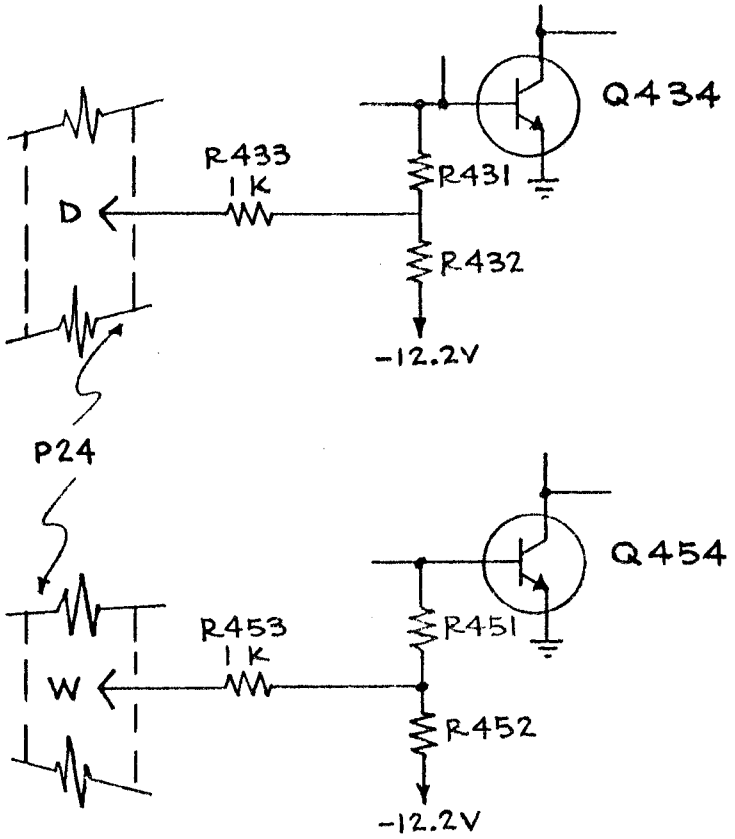

PART. INVERTER DIAG.

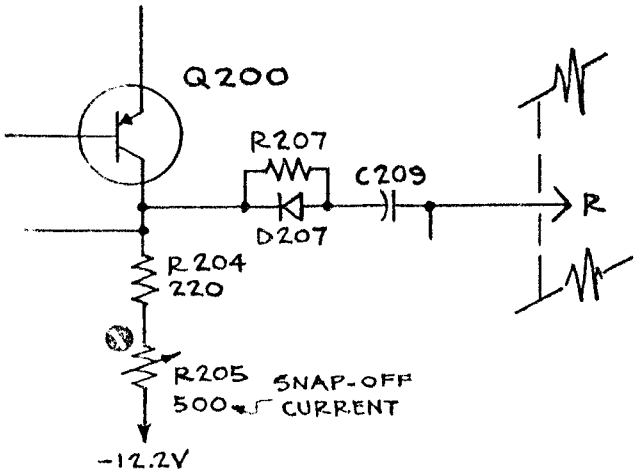

PART. GATE GEN. DIAG.