TEKTRONIX®

5A38 DUAL TRACE AMPLIFIER

INSTRUCTION MANUAL

TEKTRONIX®

5A38 DUAL TRACE AMPLIFIER

INSTRUCTION MANUAL

Tektronix, Inc.
P.O. Box 500
Beaverton, Oregon 97005

Serial Number _____

070-1694-00

1173

WARRANTY

All TEKTRONIX instruments are warranted against defective materials and workmanship for one year. Any questions with respect to the warranty should be taken up with your TEKTRONIX Field Engineer or representative.

All requests for repair and replacement parts should be directed to the TEKTRONIX Field Office or representative in your area. This will assure you the fastest possible service. Please include the instrument Type Number or Part Number and Serial Number with all requests for parts or service.

Specifications and price change privileges reserved.

U.S.A. and Foreign TEKTRONIX products covered by U.S. and foreign patents and/or patents pending.

TABLE OF CONTENTS

Ⓐ

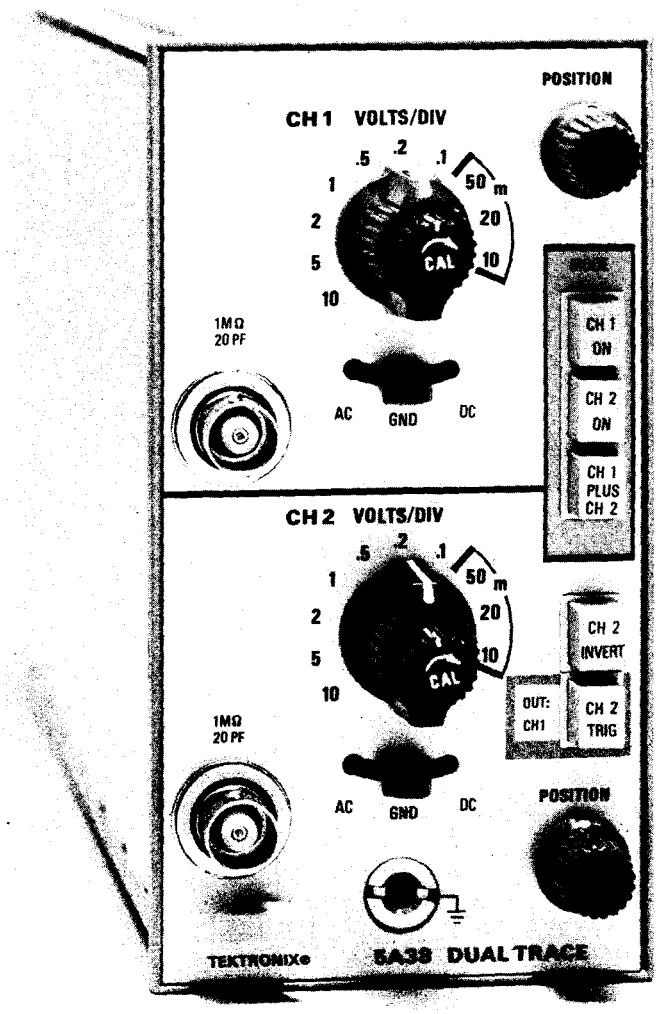

OPERATING INSTRUCTIONS

INSTRUMENT DESCRIPTION

The 5A38 is a general purpose, medium bandwidth, vertical plug-in for use with Tektronix 5400-Series Oscilloscopes. The unit contains two independent amplifier channels with identical characteristics. The plug-in may be used for single channel displays, algebraically added displays, or electronically switched to produce simultaneous dual-trace displays. Channel 2 may be inverted for differential displays.

The plug-in has readout encoding capabilities. When used in an oscilloscope with readout capabilities, the deflection sensitivities are displayed on the CRT. When used with Tektronix probes with readout capabilities, the plug-in indicates the decreased deflection sensitivity on the CRT readout.

The 5A38 is designed as a vertical amplifier, but may be used in the horizontal compartment for certain X-Y displays.

PREPARATION FOR USE

Your 5A38 is calibrated and ready for use when received. Fig. 1-1 shows installation and removal procedure. When using the 5A38 in the horizontal compartment for X-Y displays, remember that the vertical channel is delayed approximately 150 nanoseconds (3° phase shift at 50 kHz) by the vertical delay line.

Refer to the Front Panel Controls & Connectors illustration in the foldout pages at the rear of this manual for a functional description of the front panel controls. Notice the color patterns printed on the front panel. Blue indicates mode switching functions and green refers to triggering options.

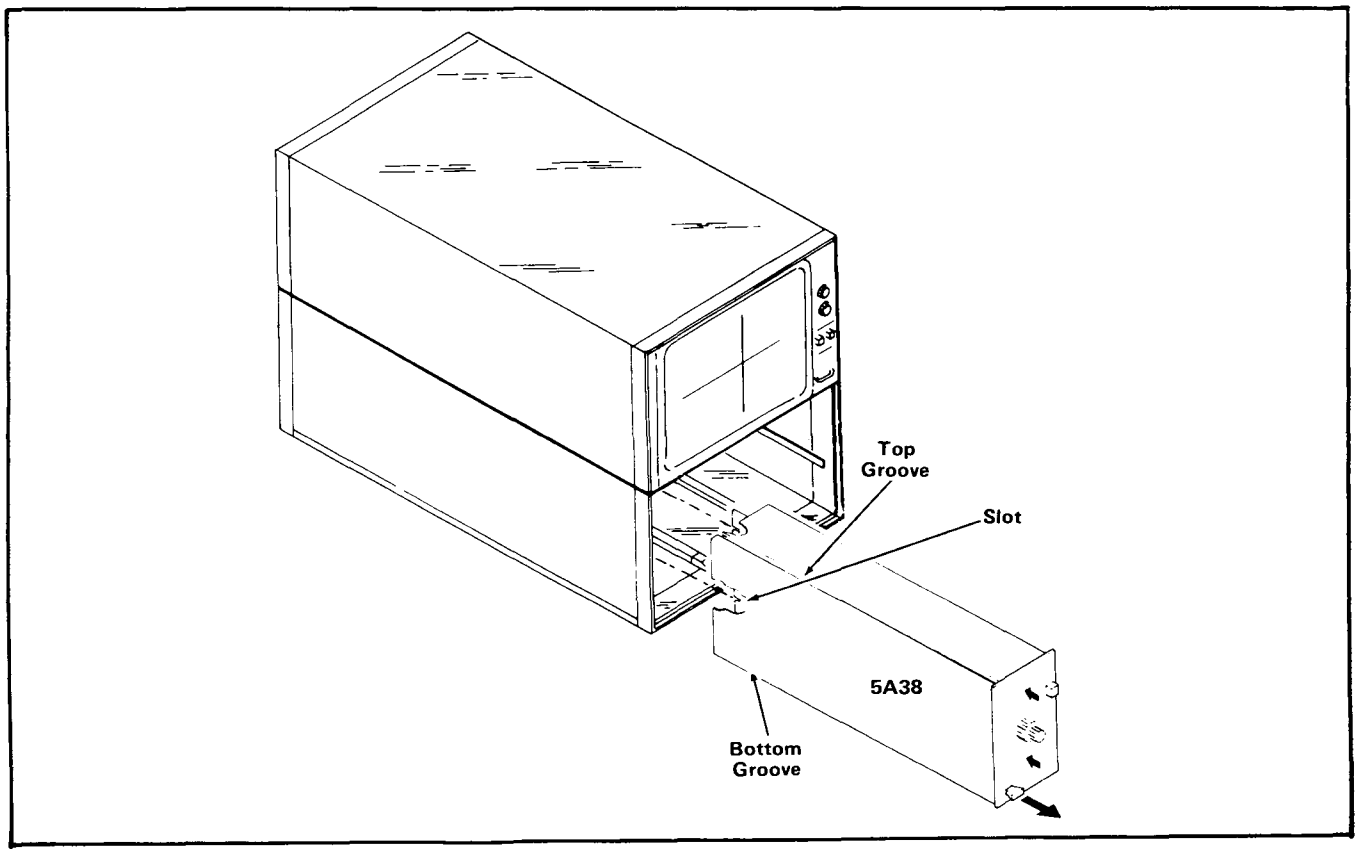

Fig. 1-1. 5A38 installation-removal procedure.

BASIC OPERATION

Push the CH 1 ON button. Set the sweep speed on the time base plug-in at 2 ms and the trigger to automatic. Set the display module intensity control to midrange. Turn the 5A38 CH 1 POSITION control until a trace appears on the CRT. Push the CH 2 ON pushbutton and adjust the CH 2 POSITION control until the second trace appears on the CRT. Set both VOLTS/DIV switches at 0.2. Place the lever switches in the DC positions. Apply the calibrator signal to the input connectors on both channels. Adjust the triggering on the time base for two stable square-wave displays, each approximately two divisions in amplitude. Push the CH 1 PLUS CH 2 pushbutton and notice a square wave four divisions in amplitude. This is the algebraically added mode. Both CH 1 and CH 2 ON buttons must be in for the plug-in to operate in the add mode. Now push the CH 2 INVERT button and observe a single trace. When operating the 5A38 in the add mode, set one position control at midrange, and position the trace with the other control.

Now release the CH 1 PLUS CH 2 and the CH 2 ON pushbutton. Place the CH 2 slide switch in the GND position. Switch the CH 1 slide switch to the AC position and observe the square wave. The display will center around the center of the graticule and show a slight slope. This indicates the signal is capacitively coupled to the input. The slope indicates low frequency rolloff due to the AC coupling.

Channel 2 input characteristics are identical. If the above displays cannot be obtained, refer to the Service Information section of this manual.

GENERAL OPERATING INFORMATION

Applying Signals

Use the highest deflection factor first, when measuring unknown voltages. If the CRT display is too small, switch to a lower deflection factor.

Probes offer the most convenient method of applying signals to the 5A38. Tektronix probes are shielded to prevent pickup of electrostatic interference. A 10X probe offers a relatively high input impedance and minimum loading to the circuit under test. The 5A38 is compatible with readout coded probes, such as the P6065 passive probe. Your Tektronix catalog lists other probes compatible with the 5A38. The input connector on the 5A38 has an outer ring to which the coding ring on the probe connector makes contact. This allows the deflection factor indicated on the CRT, in readout equiped mainframes, to show the actual deflection factor at the probe tip.

Sometimes, unshielded test leads can be used to connect the 5A38 to a signal source. This method works best when measuring high-level signals with relatively low source impedances.

Coaxial cable, with BNC connectors, works well in certain applications. When using unterminated coaxial cable, use the shortest possible lengths to prevent unnecessary capacitive loading of the signal source. To terminate the coaxial cable, connect the termination to the 5A38 input connector. Connect the coaxial cable to the termination. Connect an attenuator between the cable and the termination, if additional isolation of the plug-in input capacity from the cable is required.

A common ground between the signal source and the 5A38 is required. The probe ground connection or the shield of a coaxial cable works well as a ground return.

Input Coupling

DC coupling (slide switch to the right) should be used in most applications. If the DC component of the measured signal is large compared to the AC component, use AC coupling (slide switch to the left). Always use DC coupling for AC signals below about 10 hertz, to avoid signal attenuation in the AC position.

The GND position on the slide switch provides a ground reference at the 5A38 input. In this position, the amplifier input is grounded. The input signal is connected to ground through the AC coupling capacitor and a 1 MΩ resistor.

When connecting the 5A38 to a signal source having the desired signal superimposed on a relatively high DC voltage, place the slide switch in the GND position. Connect the signal to the input BNC connector. Then change the slide switch to the AC position. This allows the AC coupling capacitor to charge to the DC component of the viewed signal, preventing capacitor charge currents from damaging delicate circuitry under test.

SPECIFICATIONS

BANDWIDTH: DC to ⩾ 35 MHz in the 5403, DC coupled, using a 6 div reference signal. Lower end response, AC coupled, ⩽ 10 Hz.

RISETIME: ⩽ 10 ns.

DEFLECTION FACTOR ACCURACY: Within 3% from 15°C to 35°C, 4% from 0°C to 50°C. A continuously variable control provides ⩾ 2.5X additional attenuation on each range.

ABERRATIONS: ±2%, total of 3% of displayed step amplitude.

COMMON MODE REJECTION RATIO: ⩾ 50:1 up to 1 MHz.

CHANNEL ISOLATION: ⩾ 50:1 to 35 MHz with both traces displayed.

STABILITY: ⩽ 0.3 mV vertical shift in any one minute after one hour warmup, ambient temperature and line voltage held constant. ⩽ 0.2 mV/°C vertical shift with line voltage held constant.

INPUT RESISTANCE AND CAPACITANCE: 1 MΩ, within 0.5%, shunted by approximately 20 pF.

MAXIMUM SAFE INPUT VOLTAGE: DC coupled: 250 V (DC + peak AC), AC component 500 V peak-to-peak maximum at 1 kHz or less. AC coupled: 500 V (DC + peak AC), AC component 500 V peak-to-peak maximum at 1 kHz or less.

TEMPERATURE RANGE: 0°C to +50°C operating, −40°C to +70°C nonoperating.

DIMENSIONS: 5.0 in (12.5 cm) H, 2.6 in (6.7 cm) W, 12.0 in (30.5 cm) L.

WEIGHT: 1.9 lbs. (0.865 kg).

Supplemental Information

STEP ATTENUATOR BALANCE: Adjustable for one major division or less trace movement as the VOLTS/DIV control is rotated throughout its range.

INVERT SHIFT: ⩽ 3 major divisions vertical trace shift when CH 2 INVERT button is depressed.

POSITION RANGE: ⩾ ± 7 divisions from graticule center.

THEORY OF OPERATION

Introduction

When reading this discussion, refer to the complete schematic diagrams and the block diagram located in the pullout pages at the back of this manual, to understand the operation of the 5A38. Since both channels are identical, only channel one will be discussed.

Input Coupling

Input signals at the BNC connector on the front panel pass to the attenuators through the input coupling circuitry. C106 is the AC coupling capacitor, and R106 provides a charge path for this capacitor in the GND position. The input to the attenuators is also grounded for reference in this position of the slide switch. Plug-in input capacitance, in the straight-through mode, is set by C104.

The outer ring on the BNC connector connects through R100 to Q610, in the readout circuitry. Readout probes have various resistances to ground, depending on the attenuation of the probe. The resistances in the probe key the readout circuitry, which displays the proper attenuation factor on the CRT.

Attenuators

The attenuators are AC-compensated thick film hybrids on ceramic substrates. C114 sets the proper input capacitance, and C116 provides the correct series compensation for the 100X chip. C124 and C126 perform identical functions for the 10X chip. The combination of these attenuators, switched according to the charts shown on the schematics, attenuate the signals to the 5A38 amplifiers. R134 sets the input resistance for the plug-in in the straight-through mode.

Main Amplifier

After passing through the attenuator circuitry, the signal is fed to the gate of Q140A, a source follower. Q140B provides DC balance for the circuitry using R145, the DC Bal control. CR138 is a protective diode. The signal feeds to the base of Q156, connected as an emitter follower. The voltage at its base is about 0 V, and at the emitter approximately 0.7 V. This converts to about 0 V at the emitter of Q166. This stage provides current drive to the gain-changing circuitry in the amplifier.

The signal passes through the amplifier gain-changing circuitry. The gain is essentially 1X through R170, attenuated 2X at the junction of R172 and R176, and 5X through R182. R190, connected to the base of Q208, serves as the variable gain control.

Q200 and Q208 are used as a differential pair. The signal is single ended to this point. Emitter coupling from Q200 to Q208 causes equal and opposite current through the emitters of pair Q200 and Q208. The signal at the collectors of this pair is now differential, and is applied to the bases of Q214 and Q224. These transistors are a shunt feed back stage used to provide voltage gain.

Trigger Amplifiers

The differential signal at the collectors of Q214 and Q224 is applied to the bases of Q470 and Q480. These transistors are connected in a differential configuration. Their collectors are connected to the CH 2 TRIG front panel switch. When the switch is out, the collectors of Q470 and Q480 are connected to the base of Q510 and the emitter of Q520. These are the trigger output amplifiers. The switch then shorts the collectors of Q490 and Q500, in channel two, to ground through R485. The opposite occurs when the switch is in; channel one is shorted to ground through R485, and the differential signal is fed to the base of Q510 and the emitter of Q520. Q510 operates as an inverting amplifier and Q520 as a common base non-inverting stage. The in-phase signals at their collectors are added and transferred to the plug-in rear interface connector.

Channel Switching

This integrated circuit performs the channel switching functions. See Table 2-1 for a list of the pin numbers and their functions.

TABLE 2-1

U250 Pin Numbers and Functions

Pin Number	Function
1	CH 2 positioning current and gm set
2	CH 2 inverted input
3	−5 V
4	CH 1, CH 2 switch
5	V_{cc}
6	Off switch
7	CH 1 in-phase input
8	CH 1 positioning current and gm set
9	CH 1 positioning current and gm set
10	CH 1 inverted input
11	Biasing current
12	Output
13	Output
14	Add switch
15	CH 2 in-phase input
16	CH 2 positioning current and gm set

Pins 4 (CH 1, CH 2 switch), 6 (Off), and 14 (Add) control the output of this integrated circuit. Table 2-2 lists the logic and logic levels for the operation of this integrated circuit.

TABLE 2-2

Logic Level	Pins	Output
H		CH 2
L	4, 6, 14	
H	4	CH 1
L	6, 14	
H	14	CH 1 and CH 2 summed
L	4, 6	
H	6	Off (not used in normal operation)
L		

Logic Level	Pin 4	Pin 6	Pin 14
H	−4 V	−4 V	0 V
L	−5.5 V	−5.5 V	−5.5 V

Proper logic levels for the operation of U250 are provided through the CH 1 ON, CH 2 ON, ADD push-buttons, and their associated voltage dividing resistors. Q290 is the chopped-alternate emitter follower. When the waveform at its base is high (+4.5 V), the CH 1 PLUS CH 2 button is out, and CH 1 ON and CH 2 ON are in, channel two trace is displayed. When the voltage drops (0 V), channel one trace is displayed and channel two is off.

Readout

The CAL, VOLTS/DIV and CH 2 INVERT switches have contacts wired into the readout circuitry. A 0 V to −15 V pulse, approximately 125 μs in length, is applied at different times (in proper sequence) to all of the rear interface connectors associated with the readout circuitry, except the column and row lines (pins 24A, B and 28A, B). These are the output lines. The switches and resistances in the 5A38 allow the correct amount of current to the row and column lines during the prescribed pulse time for the particular character desired. See the mainframe manual for more details concerning operation of the readout circuitry, including time slots and current required for each character displayed. Q610 and Q630 switch the proper readout currents for the readout encoded probes, connected to CH 1 and CH 2 respectively.

Channel Two Amplifier

The operation of this amplifier is identical with channel one except for the CH 2 INVERT switch, which interchanges the input lines to the channel switch integrated circuit, U290.

Power Supply

Q565 and Q570 provide −5 V from the +15 V and −15 V supplies. Q570 serves as a series pass regulator and Q565 provides negative feedback. Should the voltage of the −5 V supply go positive, conduction through Q570 increases, due to increased base to emitter voltage. When the emitter of Q570 goes in the positive direction, conduction through Q565 is reduced. The collector of Q565 goes negative, further increasing the base-emitter voltage of Q570. The reverse action is true if the −5 V changes toward the negative direction.

SERVICE INFORMATION

SYMBOLS AND REFERENCE DESIGNATORS

Electrical components shown on the diagrams are in the following units unless noted otherwise:

Capacitors =	Values one or greater are in picofarads (pF).
	Values less than one are in microfarads (μF).
Resistors =	Ohms (Ω)

Symbols used on the diagrams are based on ANSI Y32.2 – 1970.

Logic symbology is based on MIL-STD-806B in terms of positive logic. Logic symbols depict the logic function performed and may differ from the manufacturer's data.

The following special symbols are used on the diagrams:

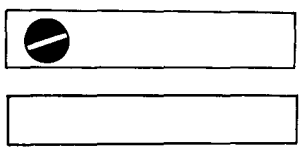

External Screwdriver adjustment.

External control or connector.

Clockwise control rotation in direction of arrow.

Refer to diagram number indicated in diamond.

Refer to waveform number indicated in hexagon.

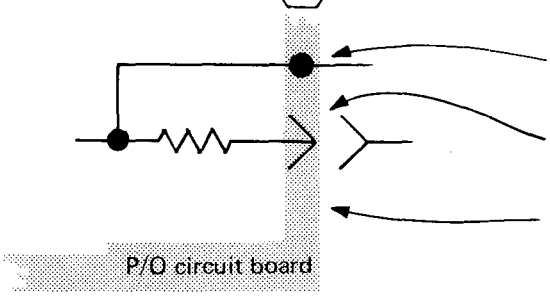

Connection soldered to circuit board.

Connection made to circuit board with interconnecting pin.

Blue tint encloses components located on circuit board.

ELECTRICAL REPLACEABLE PARTS LIST

PARTS ORDERING INFORMATION

Replacement parts are available from or through your local Tektronix, Inc. Field Office or representative.

Changes to Tektronix instruments are sometimes made to accommodate improved components as they become available, and to give you the benefit of the latest circuit improvements developed in our engineering department. It is therefore important, when ordering parts, to include the following information in your order: Part number, instrument type or number, serial number, and modification number if applicable.

If a part you have ordered has been replaced with a new or improved part, your local Tektronix, Inc. Field Office or representative will contact you concerning any change in part number.

Change information, if any, is located at the rear of this manual.

SPECIAL NOTES AND SYMBOLS

X000	Part first added at this serial number
00X	Part removed after this serial number

ITEM NAME

In the Parts List, an Item Name is separated from the description by a colon (:). Because of space limitations, an Item Name may sometimes appear as incomplete. For further Item Name identification, the U.S. Federal Cataloging Handbook H6-1 can be utilized where possible.

ABBREVIATIONS

ACTR	ACTUATOR	PLSTC	PLASTIC
ASSY	ASSEMBLY	QTZ	QUARTZ
CAP	CAPACITOR	RECP	RECEPTACLE
CER	CERAMIC	RES	RESISTOR
CKT	CIRCUIT	RF	RADIO FREQUENCY
COMP	COMPOSITION	SEL	SELECTED
CONN	CONNECTOR	SEMICOND	SEMICONDUCTOR
ELCTLT	ELECTROLYTIC	SENS	SENSITIVE
ELEC	ELECTRICAL	SEP	SEPARATELY
FXD	FIXED	VAR	VARIABLE
INCAND	INCANDESCENT	WW	WIREWOUND
LED	LIGHT EMITTING DIODE	XFMR	TRANSFORMER
NONWIR	NON WIREWOUND	XTAL	CRYSTAL

CROSS INDEX MFR. CODE NUMBER TO MANUFACTURER

MFR.CODE	MANUFACTURER	ADDRESS	CITY,STATE,ZIP
01121	Allen-Bradley Co.	1201 2nd St. South	Milwaukee, WI 53204
03508	General Electric Co., Semi-Conductor Products Dept.	Electronics Park	Syracuse, NY 13201
04713	Motorola, Inc., Semiconductor Products Div.	5005 E. McDowell Rd.	Phoenix, AZ 85008
0726^	Fairchild Semiconductor, A Div. of Fairchild Camera and Instrument Corp.	464 Ellis St.	Mountain View, CA 94040
11237	CTS Keene, Inc.	3230 Riverside Ave.	Paso Robles, CA 93446
24931	Specialty Connector Co., Inc.	3560 Madison Ave.	Indianapolis, IN 46227
56289	Sprague Electric Co.		North Adams, MA 01247
72982	Erie Technological Products, Inc.	644 W. 12th St.	Erie, PA 16512
73138	Beckman Instruments, Inc., Helipot Div.	2500 Harbor Blvd.	Fullerton, CA 92634
75042	TRW Electronic Components, IRC Fixed Resistors, Philadelphia Division	401 N. Broad St.	Philadelphia, PA 19108
80009	Tektronix, Inc.	P. O. Box 500	Beaverton, OR 97005
80031	Mepco/Electa Inc., A North American Phillips Co.	Columbia Rd.	Morristown, NJ 07960
90201	Mallory Capacitor Co., Div. of P. R. Mallory Co., Inc.	3029 E. Washington St.	Indianapolis, IN 46206
91637	Dale Electronics, Inc.	P. O. Box 609	Columbus, NB 68601

Ckt No.	Tektronix Part No.	Serial/Model No. Eff	Dscont	Name & Description	Mfr Code	Mfr Part Number
A1	670-2967-00			CKT BOARD ASSY:MAIN	80009	670-2967-00
A2	670-3210-00			CKT BOARD ASSY:ATTENUATOR CH 1	80009	670-3210-00
A3	670-3210-00			CKT BOARD ASSY:ATTENUATOR CH 2	80009	670-3210-00
C100	283-0000-00			CAP.,FXD,CER DI:0.001UF,+100-0%,500V	56289	40C626
C104	281-0213-00			CAP.,VAR,CER DI:8-3.8PF,400V	80031	2222-801-20051
C106	285-0816-01			CAP.,FXD,PLSTC:0.19UF,10%,600V	80009	285-0816-01
C114 C116	307-1014-01			ATTENUATOR STRIP:X100	80009	307-1014-01
C124 C126	307-1013-01			ATTENUATOR STRIP:X10	80009	307-1013-01
C132	281-0534-00			CAP.,FXD,CER DI:3.3PF,+/-0.25PF,500V	72982	301-000C0J0339C
C136	281-0614-00			CAP.,FXD,CER DI:6800PF,+80-20%,500V	72982	302-000Y5U0682Z
C140	290-0534-00			CAP.,FXD,ELCTLT:1UF,20%,35V	56289	196D105X0035HA1
C147	283-0000-00			CAP.,FXD,CER DI:0.001UF,+100-0%,500V	56289	40C626
C148	290-0534-00			CAP.,FXD,ELCTLT:1UF,20%,35V	56289	196D105X0035HA1
C158	283-0002-00			CAP.,FXD,CER DI:0.01UF,500V	72982	811-546E103Z
C170	281-0534-00			CAP.,FXD,CER DI:3.3PF,+/-0.25PF,500V	72982	301-000C0J0339C
C202	281-0534-00			CAP.,FXD,CER DI:3.3PF,+/-0.25PF,500V	72982	301-000C0J0339C
C212	283-0000-00			CAP.,FXD,CER DI:0.001UF,+100-0%,500V	56289	40C626
C214	281-0627-00			CAP.,FXD,CER DI:1PF,+/-0.25PF,500V	72982	301-000C0K0109C
C224	281-0627-00			CAP.,FXD,CER DI:1PF,+/-0.25PF,500V	72982	301-000C0G0109C
C226	283-0000-00			CAP.,FXD,CER DI:0.001UF,+100-0%,500V	56289	40C626
C240	281-0508-00			CAP.,FXD,CER DI:12PF,+/-0.6PF,500V	72982	301-000C0G0120J
C278	283-0002-00			CAP.,FXD,CER DI:0.01UF,500V	72982	811-546E103Z
C300	283-0000-00			CAP.,FXD,CER DI:0.001UF,+100-0%,500V	56289	40C626
C304	281-0213-00			CAP.,VAR,CER DI:8-3.8PF,400V	80031	2222-801-20051
C306	285-0816-01			CAP.,FXD,PLSTC:0.19UF,10%,600V	80009	285-0816-01
C314 C316	307-1014-01			ATTENUATOR STRIP:X100	80009	307-1014-01
C324 C326	307-1013-01			ATTENUATOR STRIP:X10	80009	307-1013-01
C332	281-0534-00			CAP.,FXD,CER DI:3.3PF,+/-0.25PF,500V	72982	301-000C0J0339C
C336	281-0614-00			CAP.,FXD,CER DI:6800PF,+80-20%,500V	72982	302-000Y5U0682Z
C340	290-0534-00			CAP.,FXD,ELCTLT:1UF,20%,35V	56289	196D105X0035HA1
C347	283-0000-00			CAP.,FXD,CER DI:0.001UF,+100-0%,500V	56289	40C626
C348	290-0534-00			CAP.,FXD,ELCTLT:1UF,20%,35V	56289	196D105X0035HA1
C352	290-0517-00			CAP.,FXD,ELCTLT:6.8UF,20%,35V	56289	196D685X0035KA1
C358	283-0002-00			CAP.,FXD,CER DI:0.01UF,500V	72982	811-546E103Z
C370	281-0534-00			CAP.,FXD,CER DI:3.3PF,+/-0.25PF,500V	72982	301-000C0J0339C
C402	281-0534-00			CAP.,FXD,CER DI:3.3PF,+/-0.25PF,500V	72982	301-000C0J0339C
C412	283-0000-00			CAP.,FXD,CER DI:0.001UF,+100-0%,500V	56289	40C626
C414	281-0627-00			CAP.,FXD,CER DI:1PF,+/-0.25PF,500V	72982	301-000C0K0109C
C416	290-0517-00			CAP.,FXD,ELCTLT:6.8UF,20%,35V	56289	196D685X0035KA1
C424	281-0627-00			CAP.,FXD,CER DI:1PF,+/-0.25PF,500V	72982	301-000C0K0109C
C426	283-0000-00			CAP.,FXD,CER DI:0.001UF,+100-0%,500V	56289	40C626
C430	281-0578-00			CAP.,FXD,CER DI:18PF,5%,500V	72982	301-000C0G0180J
C440	281-0508-00			CAP.,FXD,CER DI:12PF,+/-0.6PF,500V	72982	301-000C0G0120J
C454	290-0517-00			CAP.,FXD,ELCTLT:6.8UF,20%,35V	56289	196D685X0035KA1
C516	290-0517-00			CAP.,FXD,ELCTLT:6.8UF,20%,35V	56289	196D685X0035KA1
C522	283-0000-00			CAP.,FXD,CER DI:0.001UF,+100-0%,500V	56289	40C626
C530	290-0534-00			CAP.,FXD,ELCTLT:1UF,20%,35V	56289	196D105X0035HA1
C550	290-0534-00			CAP.,FXD,ELCTLT:1UF,20%,35V	56289	196D105X0035HA1
C555	290-0534-00			CAP.,FXD,ELCTLT:1UF,20%,35V	56289	196D105X0035HA1
C565	281-0579-00			CAP.,FXD,CER DI:21PF,5%,500V	72982	301-050C0G0210J
C575	290-0517-00			CAP.,FXD,ELCTLT:6.8UF,20%,35V	56289	196D685X0035KA1
C578	290-0517-00			CAP.,FXD,ELCTLT:6.8UF,20%,35V	56289	196D685X0035KA1
C580	290-0534-00			CAP.,FXD,ELCTLT:1UF,20%,35V	56289	196D105X0035HA1
C584	290-0534-00			CAP.,FXD,ELCTLT:1UF,20%,35V	56289	196D105X0035HA1
C590	290-0527-00			CAP.,FXD,ELCTLT:15UF,20%,20V	90201	TDC156M020FL

Ckt No.	Tektronix Part No.	Serial/Model No. Eff	Dscont	Name & Description	Mfr Code	Mfr Part Number
C625	283-0000-00			CAP.,FXD,CER DI:0.001UF,+100-0%,500V	56289	40C626
C645	283-0000-00			CAP.,FXD,CER DI:0.001UF,+100-0%,500V	56289	40C626
C650	283-0000-00			CAP.,FXD,CER DI:0.001UF,+100-0%,500V	56289	40C626
C656	283-0000-00			CAP.,FXD,CER DI:0.001UF,+100-0%,500V	56289	40C626
C670	283-0000-00			CAP.,FXD,CER DI:0.001UF,+100-0%,500V	56289	40C626
CR138	152-0324-00			SEMICOND DEVICE:SILICON,35V,100MA	03508	SE416
CR338	152-0324-00			SEMICOND DEVICE:SILICON,35V,100MA	03508	SE416
J100	131-0679-00			CONN,RCPT,ELEC:BNC W/HARDWARE	24931	28JR168-1
J200	131-1204-00			JACK,TIP:GROUNDING	80009	131-1204-00
J300	131-0679-00			CONN,RCPT,ELEC:BNC W/HARDWARE	24931	28JR168-1
L432	108-0215-00			COIL,RF:1.1UH	80009	108-0215-00
L550	108-0245-00			COIL,RF:3.9UH	80009	108-0245-00
L580	108-0245-00			COIL,RF:3.9UH	80009	108-0245-00
L590	108-0245-00			COIL,RF:3.9UH	80009	108-0245-00
Q140A,B	151-1031-00			TRANSISTOR:SILICON,FE,N-CHANNEL,DUAL	80009	151-1031-00
Q156	151-0325-00			TRANSISTOR:SILICON,PNP,SEL FROM 2N4258	80009	151-0325-00
Q166	151-0223-00			TRANSISTOR:SILICON,NPN	07263	S24848
Q200 Q208	153-0610-00			TRANSISTOR:SILICON,PNP,MTCHD PAIR	80009	153-0610-00
Q214	151-0220-00			TRANSISTOR:SILICON,PNP	80009	151-0220-00
Q224	151-0220-00			TRANSISTOR:SILICON,PNP	80009	151-0220-00
Q290	151-0341-00			TRANSISTOR:SILICON,NPN	07263	2N3565
Q340A,B	151-1031-00			TRANSISTOR:SILICON,FE,N-CHANNEL,DUAL	80009	151-1031-00
Q356	151-0325-00			TRANSISTOR:SILICON,PNP,SEL FROM 2N4258	80009	151-0325-00
Q366	151-0223-00			TRANSISTOR:SILICON,NPN	07263	S24848
Q400 Q408	153-0610-00			TRANSISTOR:SILICON,PNP,MTCHD PAIR	80009	153-0610-00
Q414	151-0220-00			TRANSISTOR:SILICON,PNP	80009	151-0220-00
Q424	151-0220-00			TRANSISTOR:SILICON,PNP	80009	151-0220-00
Q470	151-0190-00			TRANSISTOR:SILICON,NPN	04713	2N3904
Q480	151-0190-00			TRANSISTOR:SILICON,NPN	04713	2N3904
Q490	151-0190-00			TRANSISTOR:SILICON,NPN	04713	2N3904
Q500	151-0190-00			TRANSISTOR:SILICON,NPN	04713	2N3904
Q510	151-0190-00			TRANSISTOR:SILICON,NPN	04713	2N3904
Q520	151-0341-00			TRANSISTOR:SILICON,NPN	07263	2N3565
Q565	151-0342-00			TRANSISTOR:SILICON,PNP	07263	2N4249
Q570	151-0188-00			TRANSISTOR:SILICON,PNP	04713	2N3906
Q610	151-0254-00			TRANSISTOR:SILICON,NPN	03508	2N5308
Q630	151-0254-00			TRANSISTOR:SILICON,NPN	03508	2N5308
R100	315-0101-00			RES.,FXD,COMP:100 OHM,5%,0.25W	01121	CB1015
R102	321-0222-00			RES.,FXD,FILM:2K OHM,1%,0.125W	75042	CEAT0-2001F
R104	315-0510-00			RES.,FXD,COMP:51 OHM,5%,0.25W	01121	CB5105
R106	315-0105-00			RES.,FXD,COMP:1M OHM,5%,0.25W	01121	CB1055
R132	315-0391-00			RES.,FXD,COMP:390 OHM,5%,0.25W	01121	CB3915
R134	321-0481-03			RES.,FXD,FILM:1M OHM,0.25%,0.125W	91637	MFF1816D10003C
R136	315-0224-00			RES.,FXD,COMP:220K OHM,5%,0.25W	01121	CB2245
R140	315-0132-00			RES.,FXD,COMP:1.3K OHM,5%,0.25W	01121	CB1325
R142	321-0148-00			RES.,FXD,FILM:340 OHM,1%,0.125W	75042	CEAT0-3400F
R143	315-0132-00			RES.,FXD,COMP:1.3K OHM,5%,0.25W	01121	CB1325
R145	311-1559-00			RES.,VAR,NONWIR:10K OHM,20%,0.50W	73138	91A-10001M
R147	321-0385-00			RES.,FXD,FILM:100K OHM,1%,0.125W	75042	CEAT0-1003F
R148	321-0181-00			RES.,FXD,FILM:750 OHM,1%,0.125W	75042	CEAT0-7500F
R150	321-0148-00			RES.,FXD,FILM:340 OHM,1%,0.125W	75042	CEAT0-3400F
R152	315-0100-00			RES.,FXD,COMP:10 OHM,5%,0.25W	01121	CB1005
R156	315-0431-00			RES.,FXD,COMP:430 OHM,5%,0.25W	01121	CB4315
R158	315-0201-00			RES.,FXD,COMP:200 OHM,5%,0.25W	01121	CB2015
R160	315-0181-00			RES.,FXD,COMP:180 OHM,5%,0.25W	01121	CB1815
R164	315-0911-00			RES.,FXD,COMP:910 OHM,5%,0.25W	01121	CB9115
R166	315-0302-00			RES.,FXD,COMP:3K OHM,5%,0.25W	01121	CB3025

Ckt No.	Tektronix Part No.	Serial/Model No. Eff	Dscont	Name & Description	Mfr Code	Mfr Part Number
R168	315-0750-00			RES.,FXD,COMP:75 OHM,5%,0.25W	01121	CB7505
R170	321-0105-00			RES.,FXD,FILM:121 OHM,1%,0.125W	75042	CEAT0-1210F
R172	321-0928-03			RES.,FXD,FILM:250 OHM,0.25%,0.125W	91637	MFF1816D250R0C
R176	321-0114-03			RES.,FXD,FILM:150 OHM,0.25%,0.125W	91637	MFF1816D150R0C
R180	321-0097-03			RES.,FXD,FILM:100 OHM,0.25%,0.125%	91637	MFF1816G100R0C
R182	321-0065-00			RES.,FXD,FILM:46.4 OHM,1%,0.125W	75042	CEAT0-46R40F
R184	315-0111-00			RES.,FXD,COMP:110 OHM,5%,0.25W	01121	CB1115
R190[1]	311-1599-00			RES.,VAR,NONWIR:2.5K OHM,20%,1W	01121	12M408
R192	321-0107-00			RES.,FXD,FILM:127 OHM,1%,0.125W	75042	CEAT0-1270F
R200	321-0059-00			RES.,FXD,FILM:40.2 OHM,1%,0.125W	75042	CEAT0-40R20F
R202	315-0201-00			RES.,FXD,COMP:200 OHM,5%,0.25W	01121	CB2015
R205	323-0208-00			RES.,FXD,FILM:1.43K OHM,1%,0.50W	75042	CECT0-1431F
R208	321-0059-00			RES.,FXD,FILM:40.2 OHM,1%,0.125W	75042	CEAT0-40R20F
R212	321-0108-00			RES.,FXD,FILM:130 OHM,1%,0.125W	75042	CEAT0-1300F
R214	321-0139-00			RES.,FXD,FILM:274 OHM,1%,0.125W	75042	CEAT0-2740F
R216	322-0215-00			RES.,FXD,FILM:1.69K OHM,1%,0.25W	75042	CEBT0-1691F
R220	322-0175-00			RES.,FXD,FILM:649 OHM,1%,0.25W	91637	MFF1221G649R0F
R222	322-0175-00			RES.,FXD,FILM:649 OHM,1%,0.25W	91637	MFF1221G649R0F
R224	321-0139-00			RES.,FXD,FILM:274 OHM,1%,0.125W	75042	CEAT0-2740F
R226	321-0108-00			RES.,FXD,FILM:130 OHM,1%,0.125W	75042	CEAT0-1300F
R230	315-0270-00			RES.,FXD,COMP:27 OHM,5%,0.25W	01121	CB2705
R232	315-0270-00			RES.,FXD,COMP:27 OHM,5%,0.25W	01121	CB2705
R235	311-1568-00			RES.,VAR,NONWIR:50 OHM,20%,0.50W	73138	91A-50R00M
R236	321-0105-00			RES.,FXD,FILM:121 OHM,1%,0.125W	75042	CEAT0-1210F
R240	315-0431-00			RES.,FXD,COMP:430 OHM,5%,0.25W	01121	CB4315
R244	322-0222-00			RES.,FXD,FILM:2K OHM,1%,0.25W	75042	CEBT0-2001F
R246	322-0222-00			RES.,FXD,FILM:2K OHM,1%,0.25W	75042	CEBT0-2001F
R250	311-0608-00			RES.,VAR,NONWIR:2K OHM,10%,0.75W	11237	300SF-3016G0
R256	321-0146-00			RES.,FXD,FILM:324 OHM,1%,0.125W	75042	CEAT0-3240F
R258	321-0096-00			RES.,FXD,FILM:97.6 OHM,1%,0.125W	75042	CEAT0-97R60F
R270	315-0241-00			RES.,FXD,COMP:240 OHM,5%,0.25W	01121	CB2415
R272	315-0472-00			RES.,FXD,COMP:4.7K OHM,5%,0.25W	01121	CB4725
R274	315-0202-00			RES.,FXD,COMP:2K OHM,5%,0.25W	01121	CB2025
R276	315-0471-00			RES.,FXD,COMP:470 OHM,5%,0.25W	01121	CB4715
R280	315-0103-00			RES.,FXD,COMP:10K OHM,5%,0.25W	01121	CB1035
R282	315-0432-00			RES.,FXD,COMP:4.3K OHM,5%,0.25W	01121	CB4325
R290	315-0122-00			RES.,FXD,COMP:1.2K OHM,5%,0.25W	01121	CB1225
R292	315-0392-00			RES.,FXD,COMP:3.9K OHM,5%,0.25W	01121	CB3925
R300	315-0101-00			RES.,FXD,COMP:100 OHM,5%,0.25W	01121	CB1015
R302	321-0222-00			RES.,FXD,FILM:2K OHM,1%,0.125W	75042	CEAT0-2001F
R304	315-0510-00			RES.,FXD,COMP:51 OHM,5%,0.25W	01121	CB5105
R306	315-0105-00			RES.,FXD,COMP:1M OHM,5%,0.25W	01121	CB1055
R332	315-0391-00			RES.,FXD,COMP:390 OHM,5%,0.25W	01121	CB3915
R334	321-0481-03			RES.,FXD,FILM:1M OHM,0.25%,0.125W	91637	MFF1816D10003C
R336	315-0224-00			RES.,FXD,COMP:220K OHM,5%,0.25W	01121	CB2245
R340	315-0132-00			RES.,FXD,COMP:1.3K OHM,5%,0.25W	01121	CB1325
R342	321-0148-00			RES.,FXD,FILM:340 OHM,1%,0.125W	75042	CEAT0-3400F
R343	315-0132-00			RES.,FXD,COMP:1.3K OHM,5%,0.25W	01121	CB1325
R345	311-1559-00			RES.,VAR,NONWIR:10K OHM,20%,0.50W	73138	91A-10001M
R347	321-0385-00			RES.,FXD,FILM:100K OHM,1%,0.125W	75042	CEAT0-1003F
R348	321-0181-00			RES.,FXD,FILM:750 OHM,1%,0.125W	75042	CEAT0-7500F
R350	321-0148-00			RES.,FXD,FILM:340 OHM,1%,0.125W	75042	CEAT0-3400F
R352	315-0100-00			RES.,FXD,COMP:10 OHM,5%,0.25W	01121	CB1005
R356	315-0431-00			RES.,FXD,COMP:430 OHM,5%,0.25W	01121	CB4315
R358	315-0201-00			RES.,FXD,COMP:200 OHM,5%,0.25W	01121	CB2015
R360	315-0181-00			RES.,FXD,COMP:180 OHM,5%,0.25W	01121	CB1815
R364	315-0911-00			RES.,FXD,COMP:910 OHM,5%,0.25W	01121	CB9115
R366	315-0302-00			RES.,FXD,COMP:3K OHM,5%,0.25W	01121	CB3025
R368	315-0750-00			RES.,FXD,COMP:75 OHM,5%,0.25W	01121	CB7505
R370	321-0105-00			RES.,FXD,FILM:121 OHM,1%,0.125W	75042	CEAT0-1210F

[1]Furnished as a unit with S190.

Ckt No.	Tektronix Part No.	Serial/Model No. Eff	Dscont	Name & Description	Mfr Code	Mfr Part Number
R372	321-0928-03			RES.,FXD,FILM:250 OHM,0.25%,0.125W	91637	MFF1816D250R0C
R376	321-0114-03			RES.,FXD,FILM:150 OHM,0.25%,0.125W	91637	MFF1816D150R0C
R380	321-0097-03			RES.,FXD,FILM:100 OHM,0.25%,0.125%	91637	MFF1816G100R0C
R382	321-0065-00			RES.,FXD,FILM:46.4 OHM,1%,0.125W	75042	CEAT0-46R40F
R384	315-0111-00			RES.,FXD,COMP:110 OHM,5%,0.25W	01121	CB1115
R390[1]	311-1599-00			RES.,VAR,NONWIR:2.5K OHM,20%,1W	01121	12M408
R392	321-0107-00			RES.,FXD,FILM:127 OHM,1%,0.125W	75042	CEAT0-1270F
R394	315-0242-00			RES.,FXD,COMP:2.4 OHM,5%,0.25W	01121	CB2425
R400	321-0059-00			RES.,FXD,FILM:40.2 OHM,1%,0.125W	75042	CEAT0-40R20F
R402	315-0201-00			RES.,FXD,COMP:200 OHM,5%,0.25W	01121	CB2015
R405	323-0208-00			RES.,FXD,FILM:1.43K OHM,1%,0.50W	75042	CECT0-1431F
R408	321-0059-00			RES.,FXD,FILM:40.2 OHM,1%,0.125W	75042	CEAT0-40R20F
R412	321-0108-00			RES.,FXD,FILM:130 OHM,1%,0.125W	75042	CEAT0-1300F
R414	321-0139-00			RES.,FXD,FILM:274 OHM,1%,0.125W	75042	CEAT0-2740F
R416	322-0215-00			RES.,FXD,FILM:1.69K OHM,1%,0.25W	75042	CEBT0-1691F
R420	322-0175-00			RES.,FXD,FILM:649 OHM,1%,0.25W	91637	MFF1221G649R0F
R422	322-0175-00			RES.,FXD,FILM:649 OHM,1%,0.25W	91637	MFF1221G649R0F
R424	321-0139-00			RES.,FXD,FILM:274 OHM,1%,0.125W	75042	CEAT0-2740F
R426	321-0108-00			RES.,FXD,FILM:130 OHM,1%,0.125W	75042	CEAT0-1300F
R428	315-0821-00			RES.,FXD,COMP:820 OHM,5%,0.25W	01121	CB8215
R430	315-0270-00			RES.,FXD,COMP:27 OHM,5%,0.25W	01121	CB2705
R432	315-0270-00			RES.,FXD,COMP:27 OHM,5%,0.25W	01121	CB2705
R435	311-1568-00			RES.,VAR,NONWIR:50 OHM,20%,0.50W	73138	91A-50R00M
R436	321-0105-00			RES.,FXD,FILM:121 OHM,1%,0.125W	75042	CEAT0-1210F
R440	315-0431-00			RES.,FXD,COMP:430 OHM,5%,0.25W	01121	CB4315
R444	322-0222-00			RES.,FXD,FILM:2K OHM,1%,0.25W	75042	CEBT0-2001F
R446	322-0222-00			RES.,FXD,FILM:2K OHM,1%,0.25W	75042	CEBT0-2001F
R450	311-0608-00			RES.,VAR,NONWIR:2K OHM,10%,0.75W	11237	300SF-301660
R452	315-0102-00			RES.,FXD,COMP:1K OHM,5%,0.25W	01121	CB1025
R454	307-0103-00			RES.,FXD,COMP:2.7 OHM,5%,0.25W	01121	CB27G5
R456	321-0146-00			RES.,FXD,FILM:324 OHM,1%,0.125W	75042	CEAT0-3240F
R458	321-0096-00			RES.,FXD,FILM:97.6 OHM,1%,0.125W	75042	CEAT0-97R60F
R470	315-0201-00			RES.,FXD,COMP:200 OHM,5%,0.25W	01121	CB2015
R472	321-0064-00			RES.,FXD,FILM:45.3 OHM,1%,0.125W	75042	CEAT0-45R30F
R476	322-0167-00			RES.,FXD,FILM:536 OHM,1%,0.25W	91637	MFF1221G536R0F
R480	315-0201-00			RES.,FXD,COMP:200 OHM,5%,0.25W	01121	CB2015
R482	321-0064-00			RES.,FXD,FILM:45.3 OHM,1%,0.125W	75042	CEAT0-45R30F
R485	321-0138-00			RES.,FXD,FILM:267 OHM,1%,0.125W	75042	CEAT0-2670F
R490	315-0201-00			RES.,FXD,COMP:200 OHM,5%,0.25W	01121	CB2015
R492	321-0064-00			RES.,FXD,FILM:45.3 OHM,1%,0.125W	75042	CEAT0-45R30F
R500	315-0201-00			RES.,FXD,COMP:200 OHM,5%,0.25W	01121	CB2015
R502	321-0064-00			RES.,FXD,FILM:45.3 OHM,1%,0.125W	75042	CEAT0-45R30F
R506	322-0167-00			RES.,FXD,FILM:536 OHM,1%,0.25W	91637	MFF1221G536R0F
R510	321-0146-00			RES.,FXD,FILM:324 OHM,1%,0.125W	75042	CEAT0-3240F
R512	321-0225-00			RES.,FXD,FILM:2.15K OHM,1%,0.125W	75042	CEAT0-2151F
R514	307-0103-00			RES.,FXD,COMP:2.7 OHM,5%,0.25W	01121	CB27G5
R516	321-0146-00			RES.,FXD,FILM:324 OHM,1%,0.125W	75042	CEAT0-3240F
R518	315-0751-00			RES.,FXD,COMP:750 OHM,5%,0.25W	01121	CB7515
R522	315-0182-00			RES.,FXD,COMP:1.8 OHM,5%,0.25W	01121	CB1825
R525	322-0197-00			RES.,FXD,FILM:1.1K OHM,1%,0.25W	75042	CEBT0-1101F
R530	315-0100-00			RES.,FXD,COMP:10 OHM,5%,0.25W	01121	CB1005
R555	315-0100-00			RES.,FXD,COMP:10 OHM,5%,0.25W	01121	CB1005
R565	321-0241-00			RES.,FXD,FILM:3.16K OHM,1%,0.125W	75042	CEAT0-3161F
R566	321-0189-00			RES.,FXD,FILM:909 OHM,1%,0.125W	75042	CEAT0-9090F
R568	315-0182-00			RES.,FXD,COMP:1.8 OHM,5%,0.25W	01121	CB1825
R570	315-0101-00			RES.,FXD,COMP:100 OHM,5%,0.25W	01121	CB1015
R575	307-0103-00			RES.,FXD,COMP:2.7 OHM,5%,0.25W	01121	CB27G5
R578	307-0103-00			RES.,FXD,COMP:2.7 OHM,5%,0.25W	01121	CB27G5
R584	315-0100-00			RES.,FXD,COMP:10 OHM,5%,0.25W	01121	CB1005
R610	321-0299-00			RES.,FXD,FILM:12.7K OHM,1%,0.125W	75042	CEAT0-1272F

[1]Furnished as a unit with S390.

Ckt No.	Tektronix Part No.	Serial/Model No. Eff	Dscont	Name & Description	Mfr Code	Mfr Part Number
R612	315-0753-00			RES.,FXD,COMP:75K OHM,5%,0.25W	01121	CB7535
R614	315-0154-00			RES.,FXD,COMP:150K OHM,5%,0.25W	01121	CB1545
R616	321-0344-00			RES.,FXD,FILM:37.4K OHM,1%,0.125W	75042	CEAT0-3742F
R618	315-0753-00			RES.,FXD,COMP:75K OHM,5%,0.25W	01121	CB7535
R620	315-0154-00			RES.,FXD,COMP:150K OHM,5%,0.25W	01121	CB1545
R622	315-0154-00			RES.,FXD,COMP:150K OHM,5%,0.25W	01121	CB1545
R623	315-0513-00			RES.,FXD,COMP:51K OHM,5%,0.25W	01121	CB5135
R625	321-0344-00			RES.,FXD,FILM:37.4K OHM,1%,0.125W	75042	CEAT0-3742F
R627	315-0753-00			RES.,FXD,COMP:75K OHM,5%,0.25W	01121	CB7535
R630	321-0299-00			RES.,FXD,FILM:12.7K OHM,1%,0.125W	75042	CEAT0-1272F
R632	315-0753-00			RES.,FXD,COMP:75K OHM,5%,0.25W	01121	CB7535
R634	315-0154-00			RES.,FXD,COMP:150K OHM,5%,0.25W	01121	CB1545
R636	321-0344-00			RES.,FXD,FILM:37.4K OHM,1%,0.125W	75042	CEAT0-3742F
R638	315-0753-00			RES.,FXD,COMP:75K OHM,5%,0.25W	01121	CB7535
R640	315-0154-00			RES.,FXD,COMP:150K OHM,5%,0.25W	01121	CB1545
R642	315-0154-00			RES.,FXD,COMP:150K OHM,5%,0.25W	01121	CB1545
R643	315-0513-00			RES.,FXD,COMP:51K OHM,5%,0.25W	01121	CB5135
R645	321-0344-00			RES.,FXD,FILM:37.4K OHM,1%,0.125W	75042	CEAT0-3742F
R647	315-0753-00			RES.,FXD,COMP:75K OHM,5%,0.25W	01121	CB7535
R650	315-0154-00			RES.,FXD,COMP:150K OHM,5%,0.25W	01121	CB1545
R652	315-0154-00			RES.,FXD,COMP:150K OHM,5%,0.25W	01121	CB1545
R653	315-0154-00			RES.,FXD,COMP:150K OHM,5%,0.25W	01121	CB1545
R656	315-0123-00			RES.,FXD,COMP:12K OHM,5%,0.25W	01121	CB1235
R658	315-0753-00			RES.,FXD,COMP:75K OHM,5%,0.25W	01121	CB7535
R660	315-0753-00			RES.,FXD,COMP:75K OHM,5%,0.25W	01121	CB7535
R662	315-0154-00			RES.,FXD,COMP:150K OHM,5%,0.25W	01121	CB1545
R670	315-0123-00			RES.,FXD,COMP:12K OHM,5%,0.25W	01121	CB1235
S100	105-0243-00			ACTUATOR,SWITCH:AC-GND-DC CH1	80009	105-0243-00
S125	263-1074-00			ACTR ASSY,CAM S:VOLTS/DIV CH1	80009	263-1074-00
S190[1]						
S270A,	260-1609-00			SWITCH,PUSH:CH1 ON	80009	260-1609-00
S270B,C				SWITCH,PUSH:CH2 ON/CH1 PLUS CH2		
S300	105-0243-00			ACTUATOR,SWITCH:AC-GND-DC CH2	80009	105-0243-00
S325	263-1074-00			ACTR ASSY,CAM S:VOLTS/DIV CH2	80009	263-1074-00
S390[2]						
S430	260-1486-00			SWITCH,PUSH:INVERT CH2	80009	260-1486-00
S470	260-1486-00			SWITCH,PUSH:TRIG CH2	80009	260-1486-00
U250	155-0022-00			MICROCIRCUIT DI:ML,CHANNEL SWITCH	80009	155-0022-00

[1]Furnished as a unit with R190.
[2]Furnished as a unit with R390.

INTERNAL ADJUSTMENT PROCEDURE

Services Available

Tektronix, Inc. provides complete instrument repair and adjustment at local field service centers and at the factory service center. Contact your local Tektronix field office or representative for further information.

Maintenance

Refer to the oscilloscope system manual for general service information. The attenuator circuit boards are made from polyphenylene oxide, because of its electrical characteristics. Clean these boards with isopropyl alcohol and blow off with compressed air. Do not use acetone, trichloroethylene, chloroethane or methyl ethyl ketone.

Use special care when soldering or replacing components on these boards. Do not apply mechanical stress to the board. Use a small soldering iron, not over 15 watts, and low temperature solder. Apply only the necessary amount of heat. Use a desoldering tool when removing multi-lead devices.

Test Equipment

For calibration, and a complete accuracy check of the 5A38, the following equipment is required:

Tektronix 5403 Oscilloscope

Tektronix 5B42 Time Base, or equivalent

Tektronix Type 106 Square-Wave Generator, or equivalent

Tektronix Standard Amplitude Calibrator, 067-0502-00, or equivalent

Tektronix 20 pF Input Normalizer, 067-0538-00

50 Ω BNC termination, 011-0049-01

50 Ω 5X BNC attenuator, 011-0060-02

50 Ω coaxial cable, 012-0057-01.

Preparation

For best accuracy, adjust this instrument at an ambient temperature between +25°C and +30°C (+68°F and +86°F). Remove the left side plug-in cover and install the 5A38 in the center plug-in compartment of the 5400 series oscilloscope.

1. 5A38 Presets

CH 1 and CH 2 VOLTS/DIV	50 m
CH 1 and CH 2 CAL	cw (detent)
CH 1 and CH 2 POSITION	midrange
CH 1 MODE ON	in
CH 1 and CH 2 slide switches	DC

All other pushbuttons must be out.

2. 5B42 Presets

POSITION	midrange
MAIN SEC/DIV	1 m
MAIN TRIG LEVEL	cw
AUTO TRIG	in
SOURCE + SLOPE	in
SOURCE RIGHT	in
MAIN SWP MODE	in

All other pushbuttons must be out.

3. Adjust DC Balance

Position CH 1 trace to the graticule center. Adjust R145, CH 1 Bal, for no vertical trace shift while switching the CH 1 VOLTS/DIV switch between the 50 m and the 0.1 position. Now release the CH 1 ON pushbutton and push the CH 2 ON pushbutton. Position the CH 2 trace to the graticule center. Switch the CH 2 VOLTS/DIV switch between the 50 m and the 0.1 position, while adjusting R345, CH 2 Bal, for no vertical trace shift.

4. Adjust Gain

Set the CH 1 and CH 2 VOLTS/DIV switch to position 10 m. Make certain the CH 1 ON button is in and all others are out. Place the CH 2 slide switch in the GND position, and the CH 1 slide switch in the DC position. Connect the Standard Amplitude Calibrator with output set for 50 mV to the CH 1 input connector, using the coaxial cable. Set the triggering on the sweep plug-in for a stable display. Now adjust R235, CH 1 Gain, for a five major division vertical display. Change the slide switches so that CH 1 is at GND and CH 2 is at DC and connect the coaxial cable to the CH 2 input connector. Push the CH 2 ON and CH 2 TRIG pushbuttons. Adjust R435, CH 2 Gain, for a five major division display.

5. Adjust Input Capacitance and Compensate Attenuators

Change the CH 2 VOLTS/DIV switch to the 20 m position. Connect the HI AMPLITUDE output of the Type 106 Square-Wave Generator through the 50 Ω coaxial cable, 5X attenuator, 50 Ω termination and 20 pF normalizer, in that order, to the CH 2 input connector. Set the square-wave generator to a frequency of 1 kHz and adjust its amplitude for a display of five major divisions. Proceed to Part A in Table 3-1 and perform the adjustments as indicated. Adjust the Square-Wave Generator output amplitude for five major divisions of display for each position of the VOLTS/DIV switch. After completing Part A, repeat the above procedure for CH 1, using Part B of Table 3-1. The displayed square-wave level, rolloff, or overshoot must not exceed 0.1 major division in any position of either VOLTS/DIV switch.

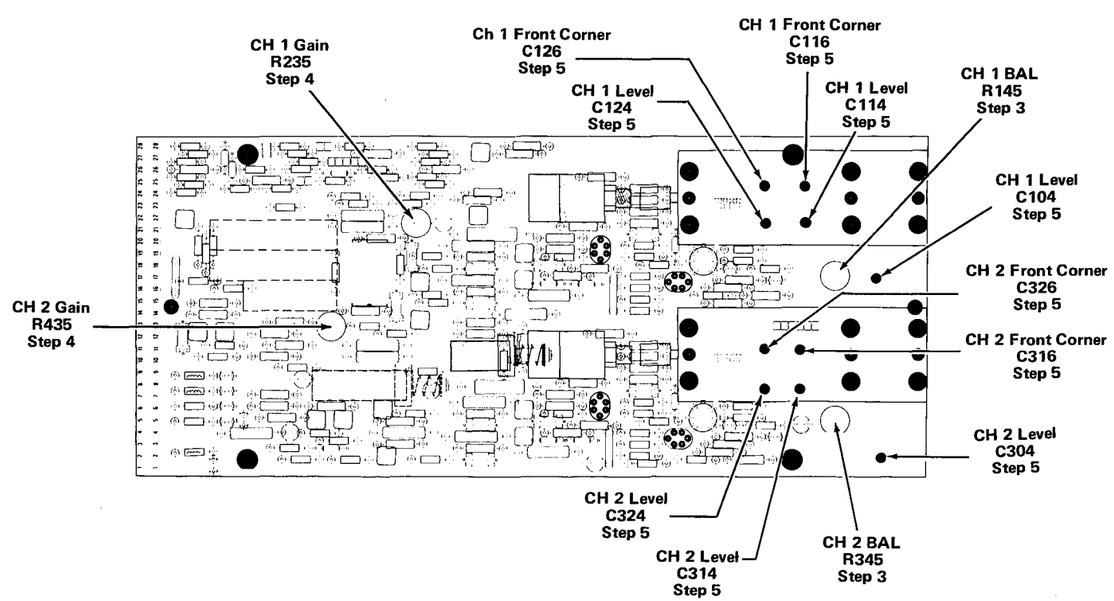

TABLE 3-1

Part A			Part B		
CH 2 VOLTS/DIV	Adjust Level	Adjust Front Corner	CH 1 VOLTS/DIV	Adjust Level	Adjust Front Corner
20 m	C304	- -	20 m	C104	- -
50 m	Check front corner		50 m	Check front corner	
.1	C324	C326	.1	C124	C126
.2	Check front corner		.2	Check front corner	
Remove 5X Attenuator					
.5	Check front corner		.5	Check front corner	
1	C314	C316	1	C114	C116
2	Check front corner		2	Check front corner	
5	Check front corner		5	Check front corner	
10	Check front corner		10	Check front corner	

6. Check VOLTS/DIV Accuracy

Connect the Standard Amplitude Calibrator, set for a 50 mV output square wave through a 50 Ω coaxial cable to the CH 2 input connector. Set the CH 2 VOLTS/DIV switch at 10 m. CH 2 ON and CH 2 TRIG pushbuttons must be in, all others out. Proceed to Table 3-2 noting the maximum error. Now release the CH 2 ON, CH 2 TRIG, and push the CH 1 ON pushbuttons. Reconnect the calibrator to CH 1 and repeat the procedure according to the table.

TABLE 3-2

SAC AMPLITUDE	5A38 VOLTS/DIV	Display Amplitude	Max Error
50 mV	10 m	5 div	.15 div (3%)
.1 V	20 m	5 div	.15 div (3%)
.2 V	50 m	4 div	.12 div (3%)
.5 V	.1	5 div	.15 div (3%)
1 V	.2	5 div	.15 div (3%)
2 V	.5	4 div	.12 div (3%)
5 V	1	5 div	.15 div (3%)
10 V	2	5 div	.15 div (3%)
20 V	5	4 div	.12 div (3%)
50 V	10	5 div	.15 div (3%)

PARTS LOCATION GRID

MAIN BOARD

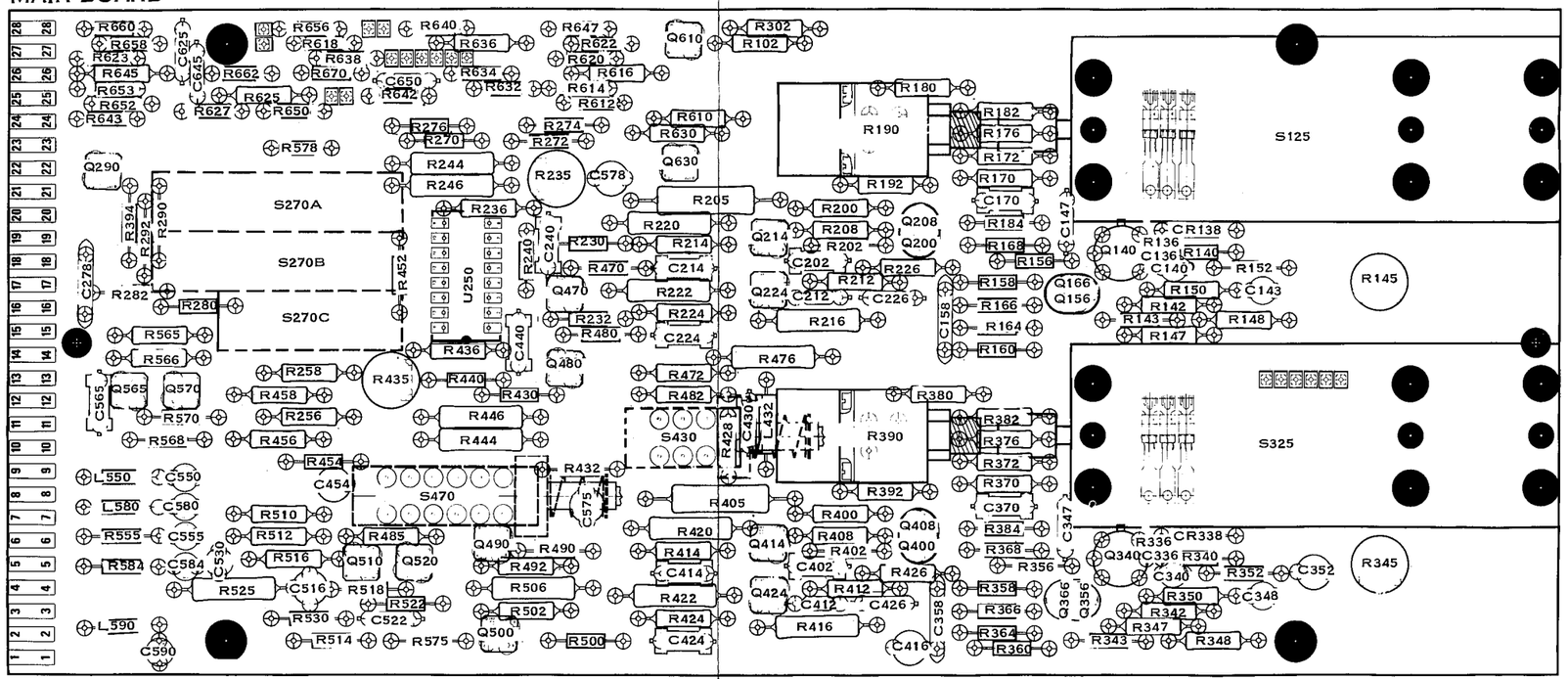

NOTE. COMPONENTS SHOWN WITH DASHED LINES ARE LOCATED ON BACK SIDE OF BOARD.

CH 1

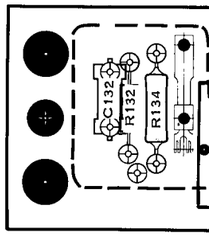

CH 2

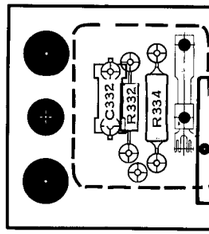

CKT NO	GRID LOC	CKT NO	GRID LOC	CKT NO	GRID LOC	CKT NO	GRID LOC	CKT NO	GRID LOC	CKT NO	GRID LOC	CKT NO	GRID LOC	CKT NO	GRID LOC	CKT NO	GRID LOC	CKT NO	GRID LOC	CKT NO	GRID LOC	CKT NO	GRID LOC	CKT NO	GRID LOC	CKT NO	GRID LOC	CKT NO	GRID LOC	CKT NO	GRID LOC
C100	P2	C170	G2	C324	M4	C416	G5	C578	E2	L432	F4	Q340	H4	Q565	B3	R142	H3	R170	G2	R214	E2	R256	C4	R306	O4	R358	G5	R394	B2	R430	D3
C104	O2	C202	F2	C326	M3	C424	E5	C580	B4	L550	B4	Q356	H5	Q570	B3	R143	H3	R172	G2	R216	F3	R258	C3	R332	M3	R360	G5	R400	F4	R432	E4
C106	O2	C212	F3	C332	M3	C426	G5	C584	B5	L580	B4	Q366	H5	Q610	E1	R145	J3	R176	G2	R220	E2	R270	D2	R334	M3	R364	G5	R402	F4	R435	C3
C114	N2	C214	E3	C336	H4	C430	F4	C590	B5	L590	B5	Q400	G4	Q630	E2	R147	H3	R180	G1	R222	E3	R272	D2	R336	H5	R366	G5	R405	F4	R436	D3
C116	N1	C224	E3	C340	I5	C440	D3	C625	B1			Q408	G4			R148	I3	R182	G1	R224	E3	R274	D2	R340	I4	R368	G4	R408	F4	R440	D3
C124	M2	C226	G3	C347	H4	C454	C4	C645	B1	Q140	H2	Q414	F4	R100	O3	R150	I3	R184	G2	R226	G3	R276	D2	R342	H5	R370	G4	R412	F5	R444	D4
C126	M1	C240	D2	C348	I5	C516	C5	C650	C1	Q156	H3	Q424	F5	R102	F1	R152	I3	R190	G2	R230	E2	R280	B3	R343	H5	R372	G4	R414	E4	R446	D4
C132	M1	C278	A3	C352	I5	C522	C5			Q166	H3	Q470	D3	R104	P2	R156	H2	R192	G2	R232	E3	R282	B3	R345	J4	R376	G4	R416	F5	R452	C3
C136	H2	C300	P4	C358	G5	C530	B4			Q200	G2	Q480	D3	R106	O2	R158	G3	R200	F2	R235	D2	R290	B2	R347	H5	R380	G3	R420	E4	R454	C4
C140	I2	C304	O4	C370	G4	C550	B4			Q208	G2	Q490	D4	R132	M1	R160	G3	R202	F2	R236	D2	R292	B2	R348	I5	R382	G4	R422	E5	R456	C4
C147	H2	C306	O4	C402	F5	C555	B4			Q214	F2	Q500	D5	R134	M1	R164	G3	R205	E2	R240	D2	R300	O5	R350	I5	R384	G4	R424	E5	R458	C3
C148	I3	C314	N4	C412	F5	C565	A3	CR138	I2	Q224	F3	Q510	C4	R136	H2	R166	G3	R208	F2	R244	D2	R302	F1	R352	I5	R390	G4	R426	G5	R470	E3
C158	G3	C316	N3	C414	E5	C575	E4	CR338	I4	Q290	A2	Q520	C4	R140	I2	R168	G2	R212	F3	R246	D2	R304	P4	R356	H4	R392	G4	R428	F4	R472	E3

CH 1

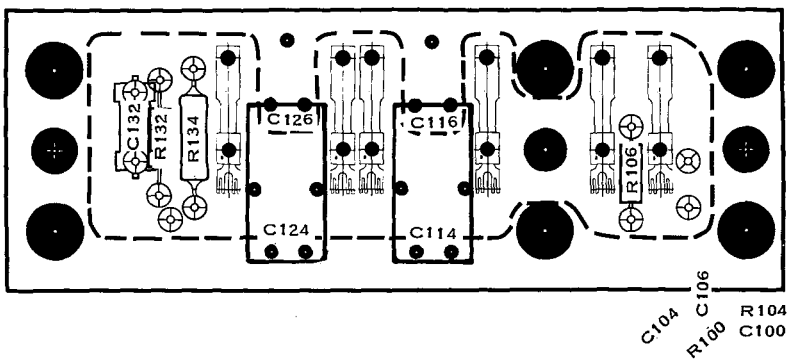

CH 2

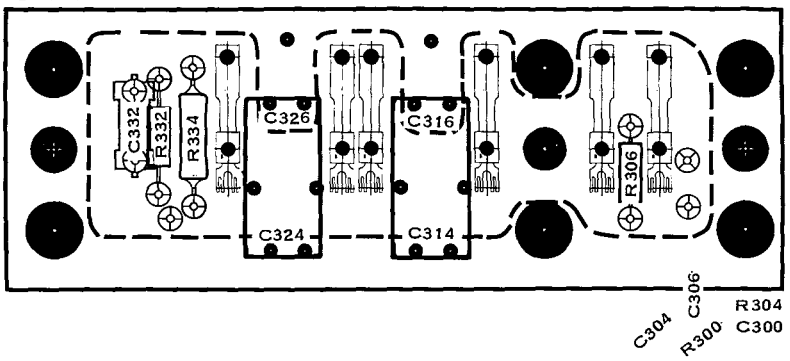

GRID LOC	CKT NO	GRID LOC	CKT NO	GRID LOC	CKT NO	GRID LOC	CKT NO	GRID LOC	CKT NO	GRID LOC	CKT NO	GRID LOC	CKT NO	GRID LOC
G5	R394	B2	R430	D3	R476	F3	R518	C5	R612	E1	R638	C1	R670	C1
G5	R400	F4	R432	E4	R480	E3	R522	C5	R614	E1	R640	D1		
G5	R402	F4	R435	C3	R482	E3	R525	B5	R616	E1	R642	C1	S125	I2
G5	R405	F4	R436	D3	R485	C4	R530	C5	R618	C1	R643	A2	S190	F2
G4	R408	F4	R440	D3	R490	D4	R555	B4	R620	E1	R645	B1	S270A	C2
G4	R412	F5	R444	D4	R492	D5	R565	B3	R622	E1	R647	E1	S270B	C2
G4	R414	E4	R446	D4	R500	E5	R566	B3	R623	A1	R650	C1	S270C	C3
G4	R416	F5	R452	C3	R502	D5	R568	B4	R625	B1	R652	B1	S325	I4
G3	R420	E4	R454	C4	R506	D5	R570	B4	R627	B1	R653	A1	S390	F4
G4	R422	E5	R456	C4	R510	C4	R575	D5	R630	E2	R656	C1	S430	E4
G4	R424	E5	R458	C3	R512	C4	R578	C2	R632	D1	R658	B1	S470	D4
G4	R426	G5	R470	E3	R514	C5	R584	B5	R634	D1	R660	B1		
G4	R428	F4	R472	E3	R516	C4	R610	E2	R636	D1	R662	B1	U250	D3

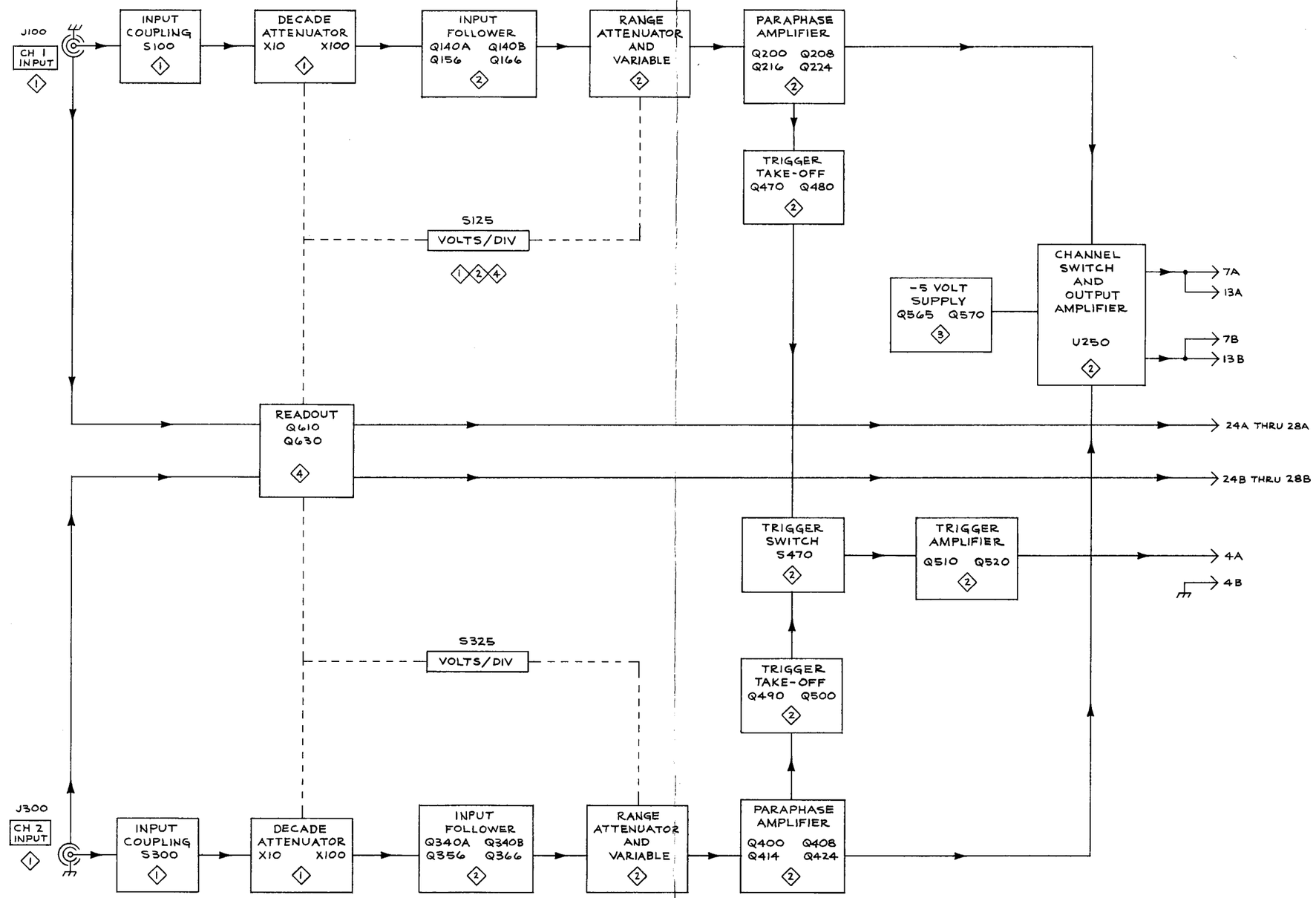

Block Diagram

CONTROLS & CONNECTORS

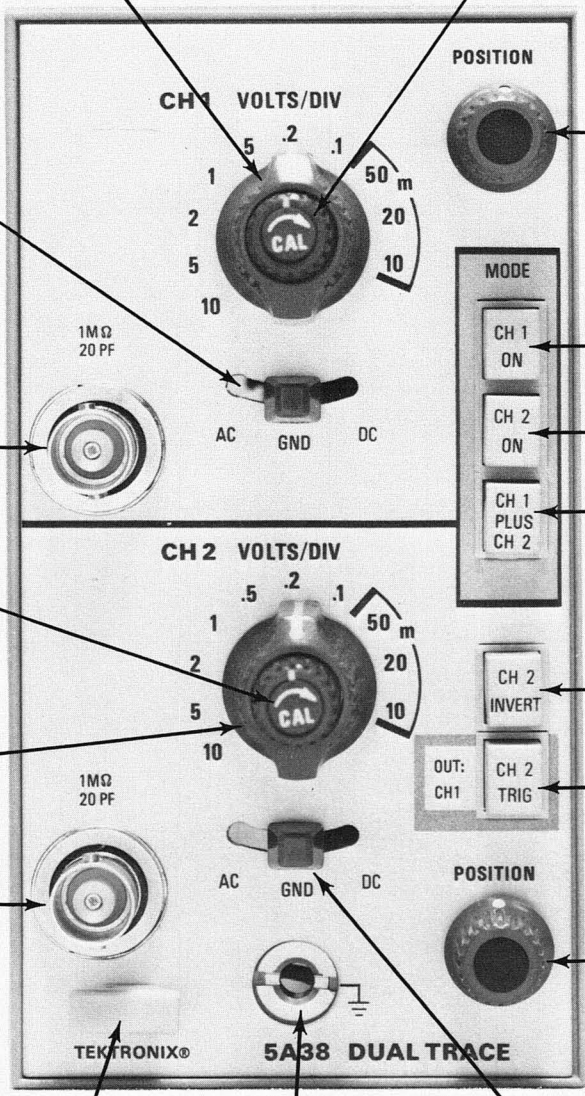

CH 1 VOLTS/DIV
Selects input sensitivity for CH 1.

CAL
Varies CH 1 sensitivity between steps.

POSITION
Vertically positions CH 1 trace on CRT.

AC GND DC
Selects input coupling. Pre-charges coupling capacitor in GND position.

CH 1 ON
Button in displays CH 1.

CH 1 INPUT

CH 2 ON
Button in displays CH 2.

CH 1 PLUS CH 2
Button in algebraically adds CH 1 and CH 2. CH 1 and CH 2 ON buttons must be in.

CAL
Varies CH 1 sensitivity between steps.

CH 2 INVERT
Inverts CH 2.

CH 2 VOLTS/DIV
Selects input sensitivity for CH 2.

CH 2 TRIG
Button in selects triggering signal from CH 2.

CH 2 INPUT

POSITION
Vertically positions CH 2 trace on CRT.

Latch
Pull to remove plug-in.

GND Connection

AC GND DC
Selects input coupling. Pre-charges coupling capacitor in GND position.

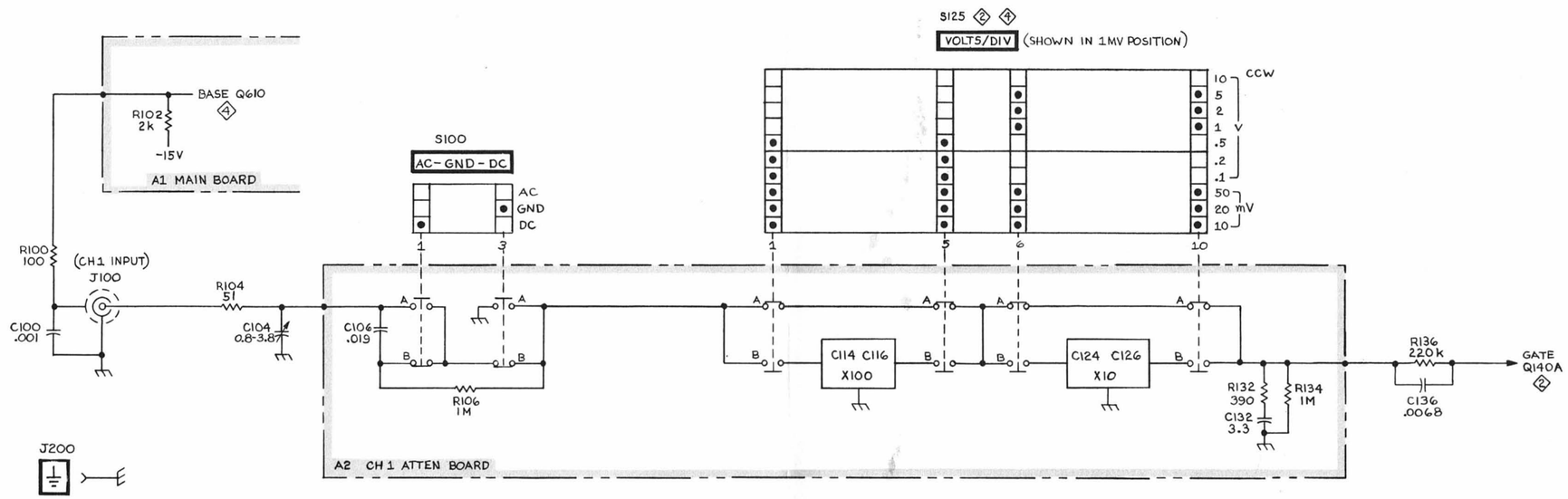

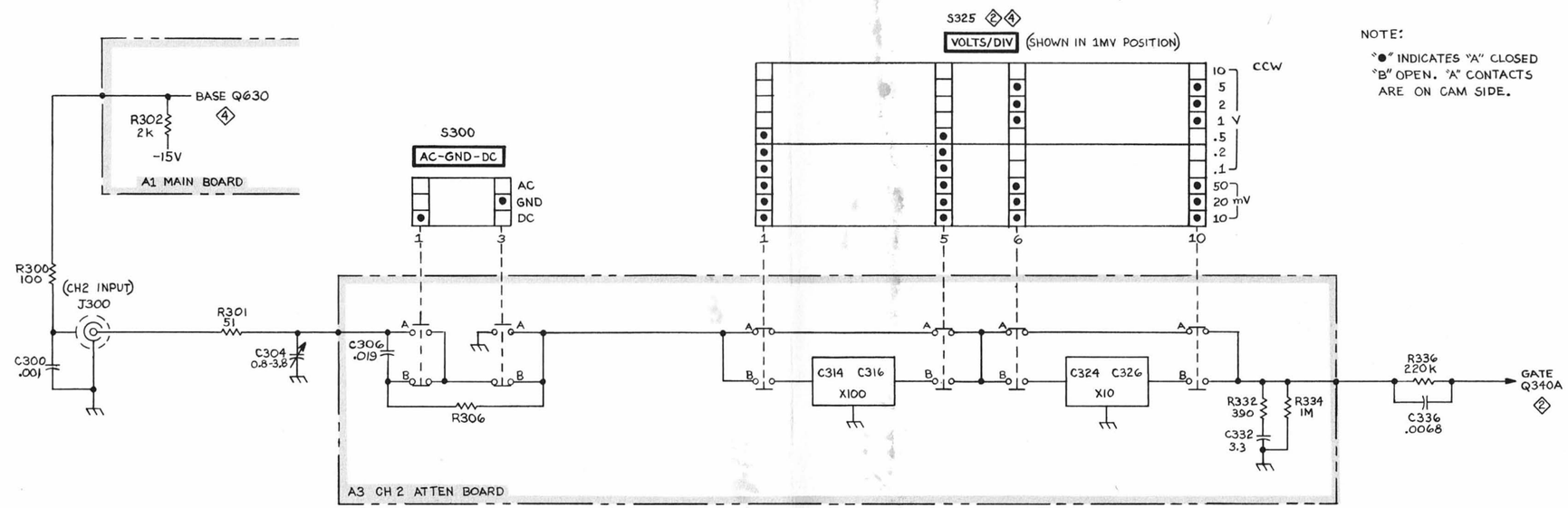

NOTE:

"●" INDICATES "A" CLOSED
"B" OPEN. "A" CONTACTS
ARE ON CAM SIDE.

INPUT & ATTENUATORS 11-73 JEN

INPUT & ATTENUATORS SCHEMATIC

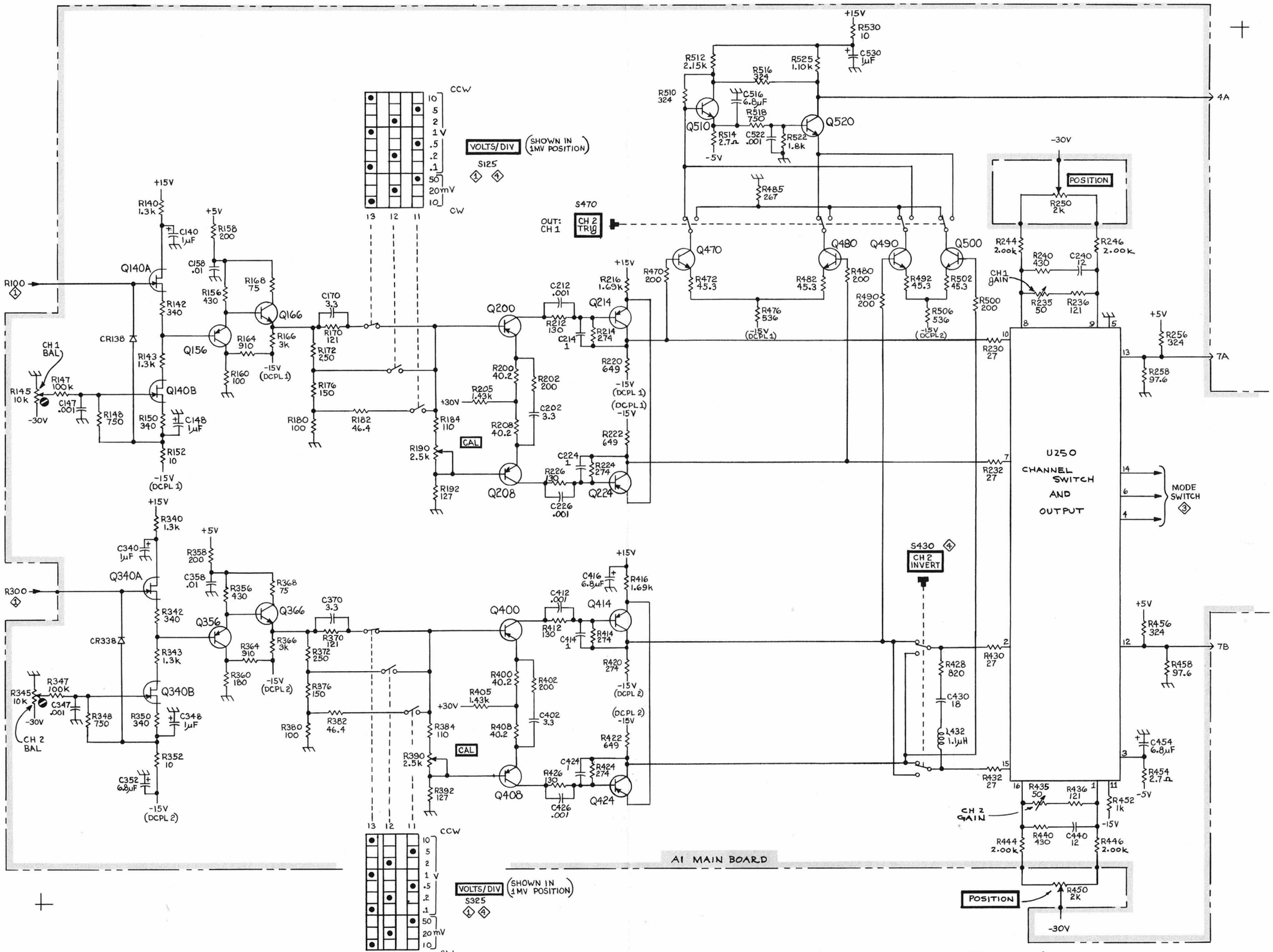

AMPLIFIERS & TRIGGER 2 11-73 SEN

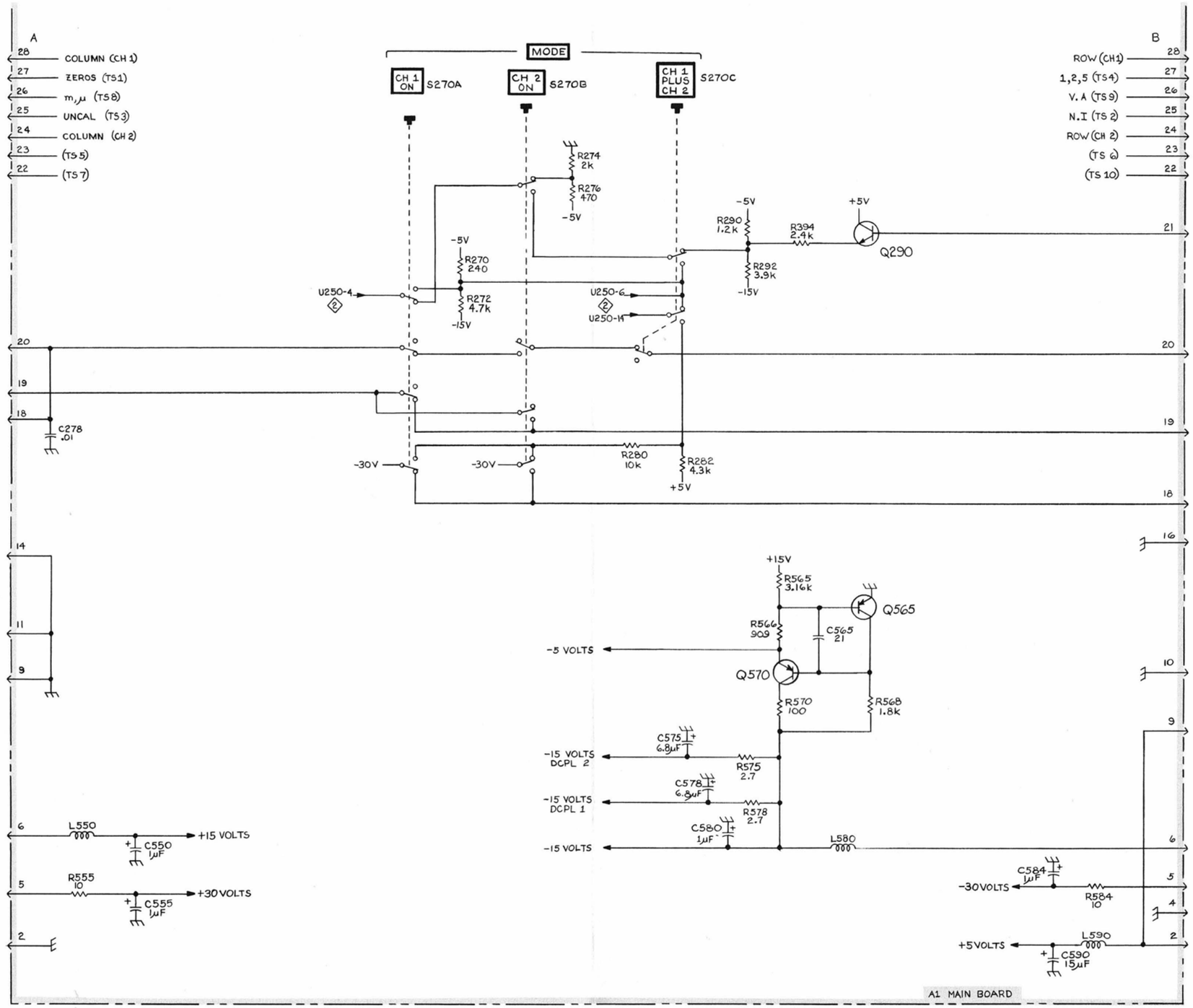

MODE SWITCHING & VOLTAGE DISTRIBUTION SCHEMATIC 3

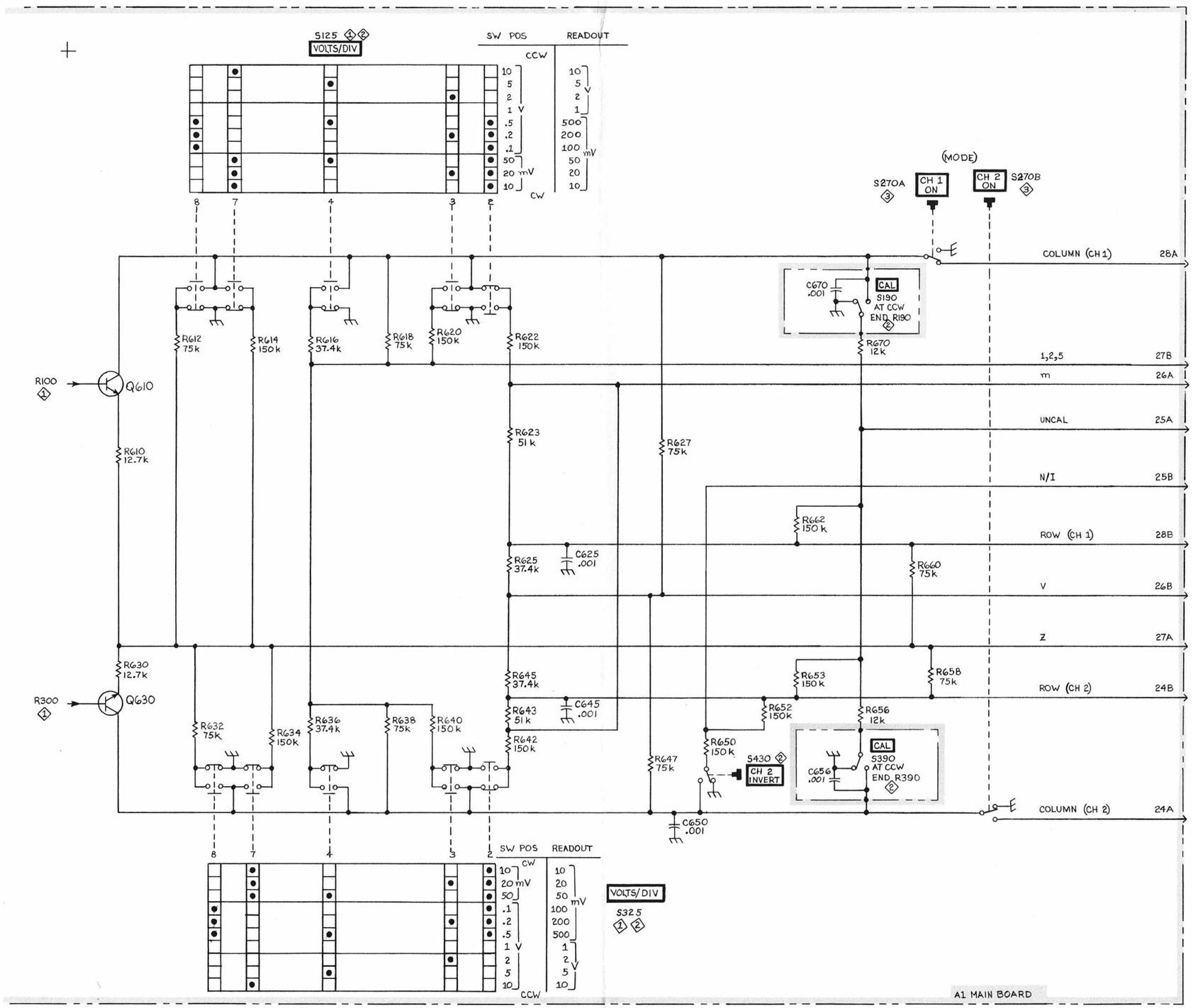

READOUT SWITCHING SCHEMATIC 4

MECHANICAL REPLACEABLE PARTS LIST

PARTS ORDERING INFORMATION

Replacement parts are available from or through your local Tektronix, Inc. Field Office or representative.

Changes to Tektronix instruments are sometimes made to accommodate improved components as they become available, and to give you the benefit of the latest circuit improvements developed in our engineering department. It is therefore important, when ordering parts, to include the following information in your order: Part number, instrument type or number, serial number, and modification number if applicable.

If a part you have ordered has been replaced with a new or improved part, your local Tektronix, Inc. Field Office or representative will contact you concerning any change in part number.

Change information, if any, is located at the rear of this manual.

SPECIAL NOTES AND SYMBOLS

X000	Part first added at this serial number
00X	Part removed after this serial number

FIGURE AND INDEX NUMBERS

Items in this section are referenced by figure and index numbers to the illustrations.

INDENTATION SYSTEM

This mechanical parts list is indented to indicate item relationships. Following is an example of the indentation system used in the description column.

1 2 3 4 5 Name & Description

Assembly and/or Component
Attaching parts for Assembly and/or Component
--- * ---
Detail Part of Assembly and/or Component
Attaching parts for Detail Part
--- * ---
Parts of Detail Part
Attaching parts for Parts of Detail Part
--- * ---

Attaching Parts always appear in the same indentation as the item it mounts, while the detail parts are indented to the right. Indented items are part of, and included with, the next higher indentation. The separation symbol --- * --- indicates the end of attaching parts.

Attaching parts must be purchased separately, unless otherwise specified.

ITEM NAME

In the Parts List, an Item Name is separated from the description by a colon (:). Because of space limitations, an Item Name may sometimes appear as incomplete. For further Item Name identification, the U.S. Federal Cataloging Handbook H6-1 can be utilized where possible.

ABBREVIATIONS

"	INCH	FLH	FLAT HEAD	PWR	POWER
#	NUMBER SIZE	FLTR	FILTER	RCPT	RECEPTACLE
ACTR	ACTUATOR	FR	FRAME or FRONT	RES	RESISTOR
ADPTR	ADAPTER	FSTNR	FASTENER	RDG	RIGID
ALIGN	ALIGNMENT	FT	FOOT	RLF	RELIEF
AL	ALUMINUM	FXD	FIXED	RTNR	RETAINER
ASSEM	ASSEMBLED	GSKT	GASKET	SCH	SOCKET HEAD
ASSY	ASSEMBLY	HDL	HANDLE	SCOPE	OSCILLOSCOPE
ATTEN	ATTENUATOR	HEX	HEXAGON	SCR	SCREW
AWG	AMERICAN WIRE GAGE	HEX HD	HEXAGONAL HEAD	SE	SINGLE END
BD	BOARD	HEX SOC	HEXAGONAL SOCKET	SECT	SECTION
BRKT	BRACKET	HLCPS	HELICAL COMPRESSION	SEMICOND	SEMICONDUCTOR
BRS	BRASS	HLEXT	HELICAL EXTENSION	SHLD	SHIELD
BRZ	BRONZE	HV	HIGH VOLTAGE	SHLDR	SHOULDERED
BSHG	BUSHING	IC	INTEGRATED CIRCUIT	SKT	SOCKET
CAB	CABINET	ID	INSIDE DIAMETER	SL	SLIDE
CAP	CAPACITOR	IDENT	IDENTIFICATION	SLFLKG	SELF-LOCKING
CER	CERAMIC	IMPLR	IMPELLER	SLVG	SLEEVING
CHAS	CHASSIS	IN	INCH	SPR	SPRING
CKT	CIRCUIT	INCAND	INCANDESCENT	SQ	SQUARE
COMP	COMPOSITION	INSUL	INSULATOR	SST	STAINLESS STEEL
CONN	CONNECTOR	INTL	INTERNAL	STL	STEEL
COV	COVER	LPHLDR	LAMPHOLDER	SW	SWITCH
CPLG	COUPLING	MACH	MACHINE	T	TUBE
CRT	CATHODE RAY TUBE	MECH	MECHANICAL	TERM	TERMINAL
DEG	DEGREE	MTG	MOUNTING	THD	THREAD
DWR	DRAWER	NIP	NIPPLE	THK	THICK
ELCTRN	ELECTRON	NON WIRE	NOT WIRE WOUND	TNSN	TENSION
ELEC	ELECTRICAL	OBD	ORDER BY DESCRIPTION	TPG	TAPPING
ELCTLT	ELECTROLYTIC	OD	OUTSIDE DIAMETER	TRH	TRUSS HEAD
ELEM	ELEMENT	OVH	OVAL HEAD	V	VOLTAGE
EPL	ELECTRICAL PARTS LIST	PH BRZ	PHOSPHOR BRONZE	VAR	VARIABLE
EQPT	EQUIPMENT	PL	PLAIN or PLATE	W/	WITH
EXT	EXTERNAL	PLSTC	PLASTIC	WSHR	WASHER
FIL	FILLISTER HEAD	PN	PART NUMBER	XFMR	TRANSFORMER
FLEX	FLEXIBLE	PNH	PAN HEAD	XSTR	TRANSISTOR

CROSS INDEX MFR. CODE NUMBER TO MANUFACTURER

MFR.CODE	MANUFACTURER	ADDRESS	CITY,STATE,ZIP
00779	AMP, Inc.	P. O. Box 3608	Harrisburg, PA 17105
01295	Texas Instruments, Inc., Components Group	P. O. Box 5012	Dallas, TX 75222
05820	Wakefield Engineering, Inc.	Audubon Rd.	Wakefield, MA 01880
08261	Spectra-Strip Corp.	7100 Lampson Ave.	Garden Grove, CA 92642
12327	Freeway Washer and Stamping Co.	P. O. Box 05206	Cleveland, OH 44105
12360	Albany Products Co., Div. of Pneumo Dynamics Corp.	351 Connecticut Ave.	South Norwalk, CT 06856
22526	Berg Electronics, Inc.	Youk Expressway	New Cumberland, PA 17070
23499	Gavitt Wire and Cable, Division of Amerace Esna Corp.	455 N. Quince St.	Escondido, CA 92025
24931	Specialty Connector Co., Inc.	3560 Madison Ave.	Indianapolis, IN 46227
42838	National Rivet and Mfg. Co.	1-21 East Jefferson St.	Waupun, WI 53963
45722	USM Corp., Parker-Kalon Fastener Div.	1 PeeRay Drive	Clifton, NJ 07014
70276	Allen Mfg. Co.	P. O. Drawer 570	Hartford, CT 06101
70278	Allied Steel and Conveyors, Div. of Sparton Corp.	17333 Healy	Detroit, MI 48212
73743	Fischer Special Mfg. Co.	446 Morgan St.	Cincinnati, OH 45206
74445	Holo-Krome Co.	31 Brook St. West	Hartford, CT 06110
78189	Illinois Tool Works, Inc. Shakeproof Division	St. Charles Road	Elgin, IL 60126
79807	Wrought Washer Mfg. Co.	2100 S. O Bay St.	Milwaukee, WI 53207
80009	Tektronix, Inc.	P. O. Box 500	Beaverton, OR 97005
83385	Central Screw Co.	2530 Crescent Dr.	Broadview, IL 60153
83501	Gavitt Wire and Cable, Division of RSC Industries, Inc.	Central St.	Brookfield, MA 01506
97464	Industrial Retaining Ring Co.	57 Cordier St.	Irvington, NJ 07111

FIGURE 1 EXPLODED

Fig. & Index No.	Tektronix Part No.	Serial/Model No. Eff	Dscont	Qty	1 2 3 4 5 Name & Description	Mfr Code	Mfr Part Number
1-1	337-1399-00			2	SHLD,ELECTRICAL:SIDE	80009	337-1399-00
-2	366-0494-00			2	KNOB:GRAY WITH SETSCREW	80009	366-0494-00
	----- -----			-	. EACH KNOB INCLUDES:		
	213-0153-00			1	. SETSCREW:5-40 X 0.125 INCH,HEX SOC.STL	74445	OBD
-3	366-1031-02			2	KNOB:RED-VAR	80009	366-1031-02
	----- -----			-	. EACH KNOB INCLUDES:		
	213-0153-00			1	. SETSCREW:5-40 X 0.125 INCH,HEX SOC.STL	74445	OBD
-4	366-1299-00			2	KNOB:GRAY	80009	366-1299-00
	----- -----			-	. EACH KNOB INCLUDES:		
	213-0153-00			2	. SETSCREW:5-40 X 0.125 INCH,HEX SOC.STL	74445	OBD
-5	366-0215-02			2	KNOB:LEVER SWITCH	80009	366-0215-02
-6	366-1286-02			1	KNOB:LATCH	80009	366-1286-02
					(ATTACHING PARTS)		
-7	214-1840-00			1	PIN,KNOB SECRG:	80009	214-1840-00
					- - - * - - -		
-8	366-1489-60			1	PUSH BUTTON:CH1 ON	80009	366-1489-60
-9	366-1489-61			1	PUSH BUTTON:CH2 ON	80009	366-1489-61
-10	366-1489-62			1	PUSH BUTTON:CH1 PLUS CH2	80009	366-1489-62
-11	366-1489-63			1	PUSH BUTTON:CH2 TRIG	80009	366-1489-63
-12	366-1489-64			1	PUSH BUTTON:CH2 INVERT	80009	366-1489-64
-13	426-0681-00			5	FR,PUSH BUTTON:GRAY PLASTIC	80009	426-0681-00
-14	131-0679-00			2	CONN,RCPT,ELEC:BNC W/HARDWARE	24931	28JR168-1
-15	220-0569-00			2	NUT,PLAIN,KNURL:0.50-28 X 0.235 INCH BRS	80009	220-0569-00
-16	----- -----			2	RES.,VAR:(SEE R250/R450 EPL)		
					(ATTACHING PARTS)		
-17	210-0583-00			2	NUT,PLAIN,HEX.:0.25-32 X 0.312 INCH,BRS	73743	2X20319-402
-18	210-0940-00			2	WASHER,FLAT:0.25 ID X 0.375 INCH OD,STL	79807	OBD
					- - - * - - -		
-19	131-1204-00			1	JACK,TIP:	80009	131-1204-00
					(ATTACHING PARTS)		
-20	210-0583-00			1	NUT,PLAIN,HEX.:0.25-32 X 0.312 INCH,BRS	73743	2X20319-402
-21	210-0046-00			1	WASHER,LOCK:INTL,0.26 ID X 0.40" OD,STL	78189	1214-05-00-0541C
					- - - * - - -		
-22	333-1882-00			1	PANEL,FRONT:5A38	80009	333-1882-00
-23	214-1513-01			1	LCH,PLUG-IN RET:	80009	214-1513-01
					(ATTACHING PARTS)		
-24	213-0254-00			1	SCR,TPG,THD CTG:2-56X0.25"100 DEG,FLH STL	45722	OBD
					- - - * - - -		
-25	386-3016-00			1	SUBPANEL,FRONT:	80009	386-3016-00
					(ATTACHING PARTS)		
-26	213-0229-00			4	SCR,TPG,THD FOR:6-20X0.375 100 DEG,FLH STL	83385	OBD
					- - - * - - -		
-27	337-2015-00			1	SHIELD,ELEC:SUBPANEL REAR	80009	337-2015-00
-28	384-1059-00			1	EXTENSION SHAFT:6.58 INCH LONG	80009	384-1059-00
-29	384-1060-00			3	SHAFT,EXT:7.831 INCHES LONG	80009	384-1060-00
-30	384-1129-00			1	EXTENSION SHAFT:5.607 INCH LONG	80009	384-1129-00
	672-0436-00			1	CKT BOARD ASSY:ATTENUATOR/MAIN		
					(ATTACHING PARTS)		
-31	213-0146-00			4	SCR,TPG,THD FOR:6-20 X 0.313 INCH,PNH STL	83385	OBD
-32	210-0801-01			4	WASHER,FLAT:0.140 ID X 0.281 INCH OD,STL	12327	OBD
					- - - * - - -		
	----- -----			-	. CKT BOARD ASSY INCLUDES:		
-33	384-1138-00			2	. SHAFT,EXT:0.124 DIA X 5.15 INCHES LONG	80009	384-1138-00
-34	376-0051-01			2	. CPLG,SHAFT,FLEX:	80009	376-0051-01
	213-0075-00			2	. SETSCREW:4-40 X 0.094 INCH,HEX SOC STL	70276	OBD
-35	----- -----			2	. RES.,VAR:(SEE R190/R390 EPL)		
-36	200-1665-00			2	. COV,ATTENUATOR:	80009	200-1665-00
					(ATTACHING PARTS)		
-37	210-0994-00			8	. WASHER,FLAT:0.125 ID X 0.25" OD,STL	83385	OBD
-38	211-0007-00			8	. SCREW,MACHINE:4-40 X 0.188 INCH,PNH STL	83385	OBD
-39	210-1008-00			4	. WASHER,FLAT:0.09 ID X 0.188" OD,BRS	12360	OBD
-40	211-0001-00			4	. SCREW,MACHINE:2-56 X 0.25 INCH,PNH STL	83385	OBD
-41	213-0055-00			2	. SCR,TPG,THD FOR:2-32 X 0.188 INCH,PNH STL	83385	OBD
					- - - * - - -		
-42	346-0113-00			1	. STRAP,GND:ATTEN CH	80009	346-0113-00
-43	346-0114-00			2	. STRAP,GND:ATTEN CKT BOARD	80009	346-0114-00
-44	441-1235-00			2	. CHAS,PLUG-IN:	80009	441-1235-00
					(ATTACHING PARTS)		
-45	211-0097-00			4	. SCREW,MACHINE:4-40 X 0.312 INCH,PNH STL	83385	OBD
-46	210-0004-00			12	. WASHER,LOCK:INT,0.12 ID X0.26" OD,STL	78189	1204-00-00-0541C
-47	129-0299-00			8	. POST,ELEC-MECH:HEX,0.333 INCH LONG	80009	129-0299-00
					- - - * - - -		

FIGURE 1 EXPLODED(CONT)

Fig. & Index No.	Tektronix Part No.	Serial/Model No. Eff	Dscont	Qty	1 2 3 4 5 Name & Description	Mfr Code	Mfr Part Number
1	----- -----			-	. . EACH CHAS,PLUG-IN INCLUDES:		
-48	136-0252-01			8	. . SOCKET,PIN CONN:0.178 INCH LONG	00779	1-332095-2
	----- -----			2	. CKT BOARD ASSY:ATTENUATOR(SEE A2/A3 EPL)		
	----- -----			-	. . EACH CKT BOARD ASSY INCLUDES:		
-49	131-1030-00			6	. . CONTACT ASSY:CAM SWITCH,BOTTOM	80009	131-1030-00
-50	131-1031-00			6	. . CONTACT ASSY:CAM SWITCH,TOP	80009	131-1031-00
-51	136-0252-01			4	. . SOCKET,PIN CONN:0.178 INCH LONG	00779	1-332095-2
-52	337-1406-00			1	. . SHLD,ELECTRICAL:CAM CONTACTS	80009	337-1406-00
					(ATTACHING PARTS)		
-53	210-0779-00			6	. . RIVET,TUBULAR:0.051 OD X 0.115 INCH LONG	42838	RA-29952715
					- - - * - - -		
	----- -----			1	. CKT BOARD ASSY:MAIN(SEE A1 EPL)		
	----- -----			-	. . CKT BOARD ASSY INCLUDES:		
-54	131-1030-00			10	. . CONTACT ASSY:CAM SWITCH,BOTTOM	80009	131-1030-00
-55	131-1031-00			16	. . CONTACT ASSY:CAM SWITCH,TOP	80009	131-1031-00
					(ATTACHING PARTS)		
-56	210-0779-00			16	. . RIVET,TUBULAR:0.051 OD X 0.115 INCH LONG	42838	RA-29952715
					- - - * - - -		
-57	136-0260-02			1	. . SOCKET,IC:16 LD DIP	01295	C931602
-58	136-0252-04			12	. . SOCKET,PIN CONN:	22526	75060-001
-59	214-1916-00			2	. . HEAT SINK,XSTR:	05820	256-D
-60	361-0385-00			10	. . SPACER,PB SW:0.164 INCH LONG	80009	361-0385-00
-61	260-1486-00			2	. . SWITCH,PUSH:	80009	260-1486-00
-62	260-1609-00			1	. . SWITCH,PUSH:	80009	260-1609-00
	263-1074-00			2	. ACTR ASSY,CAM S:	80009	263-1074-00
					(ATTACHING PARTS)		
-63	211-0116-00			12	. SCR,ASSEM WSHR:4-40 X 0.312 INCH,PNH BRS	83385	OBD
					- - - * - - -		
	----- -----			-	. . EACH ACTUATOR ASSY INCLUDES:		
-64	105-0243-00			1	. . ACTUATOR,SWITCH:	80009	105-0243-00
					(ATTACHING PARTS)		
-65	213-0214-00			1	. . SCREW,CAP SCH:2-56 X 0.375"HEX HD STL	70278	OBD
-66	354-0391-00			2	. . RING,RETAINING:0.395"FREE IDX 0.025"STL	97464	3100-43-CD
-67	131-0963-00			2	. . CONTACT,ELEC:GROUNDING	80009	131-0963-00
-68	214-1139-02			2	. . SPRING,FLAT:GREEN COLORED	80009	214-1139-02
-69	214-1139-03			2	. . SPRING,FLAT:RED COLORED	80009	214-1139-03
-70	214-1127-00			4	. . ROLLER,DETENT:0.125 DIA X 0.125 INCH L	80009	214-1127-00
-71	210-0406-00			10	. . NUT,PLAIN,HEX.:4-40 X 0.188 INCH,BRS	80009	210-0406-00
-72	401-0081-02			2	. . BEARING,CAM SW:FRONT	80009	401-0081-02
-73	105-0282-00			1	. . DRUM,CAM SWITCH:	80009	105-0282-00
-74	401-0115-00			1	. . BEARING,CAM SW:CENTER	80009	401-0115-00
-75	105-0579-00			1	. . ACTUATOR,CAM SW:	80009	105-0579-00
-76	426-0724-02			1	FR SECT,PLUG-IN:BOTTOM	80009	426-0724-02
-77	131-1372-00			2	CONTACT,ELEC:	80009	131-1372-00
-78	426-0725-02			1	FR SECT,PLUG-IN:TOP	80009	426-0725-02
-79	175-0825-00			FT	WIRE,ELECTRICAL:2 WIRE RIBBON	23499	TEK-175-0825-00
-80	175-0826-00			FT	WIRE,ELECTRICAL:3 WIRE RIBBON	08261	TEK-175-0826-00
-81	175-0829-00			FT	WIRE,ELECTRICAL:6 WIRE RIBBON	83501	TEK-175-0829-00

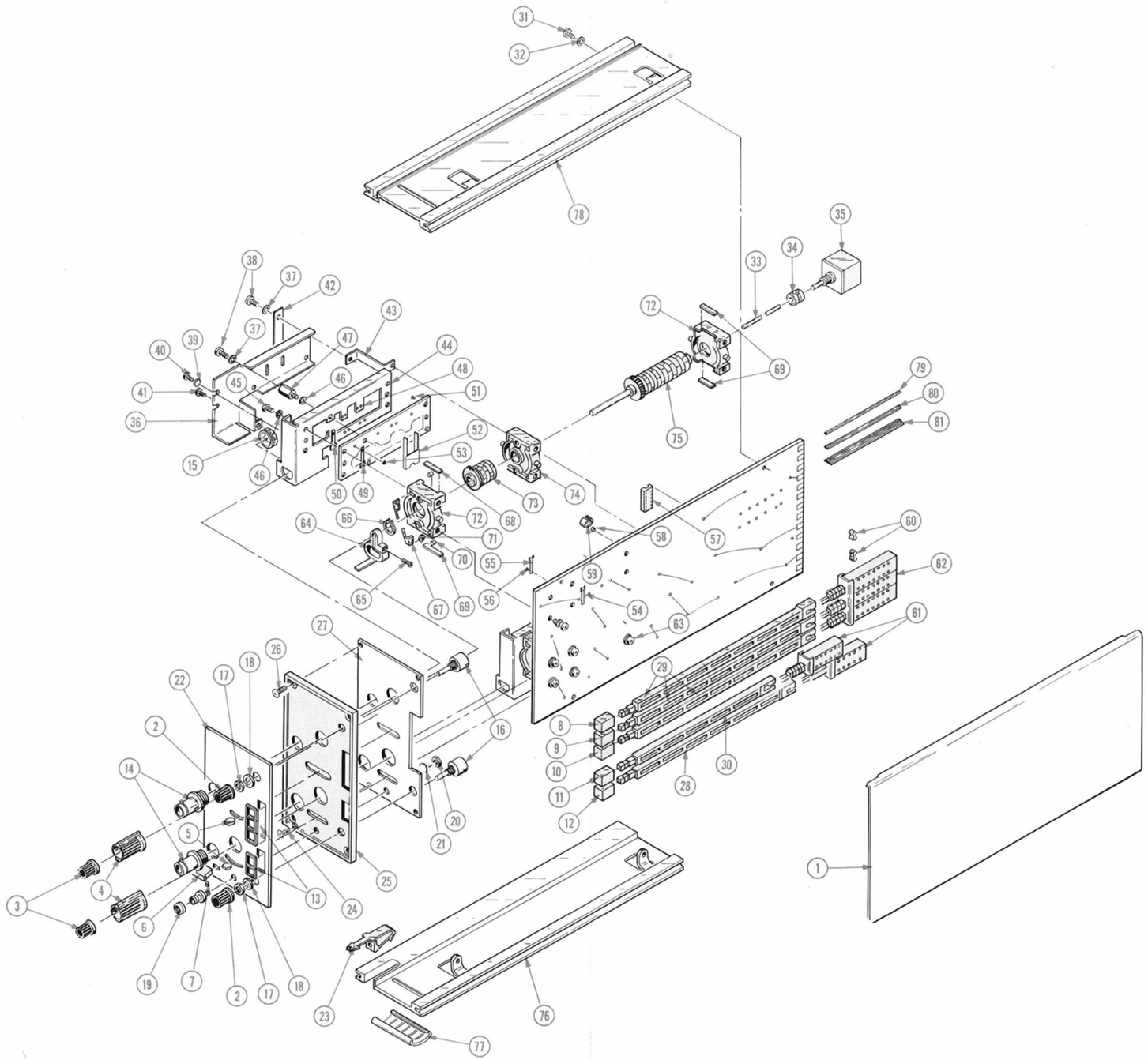

FIG. 1 EXPLODED

5A38 DUAL TRACE AMPLIFIER

ACCESSORIES

Fig. & Index No.	Tektronix Part No.	Serial/Model No. Eff	Dscont	Qty	1 2 3 4 5 Name & Description	Mfr Code	Mfr Part Number
2-	070-1694-00			1	MANUAL,TECH:INSTRUCTION	80009	070-1694-00

REPACKAGING

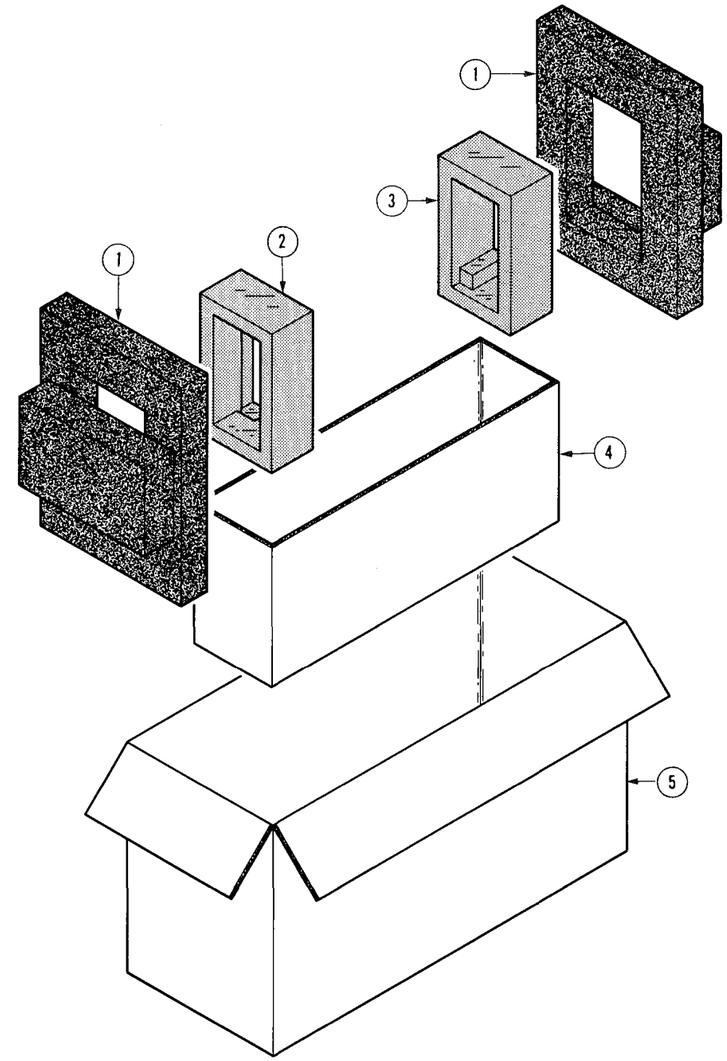

Fig. & Index No.	Tektronix Part No.	Serial/Model No. Eff	Dscont	Qty	1 2 3 4 5 Name & Description	Mfr Code	Mfr Part Number
	065-0151-00			1	CARTON ASSEMBLY	80009	065-0151-00
	----- -----			-	. CARTON ASSEMBLY INCLUDES:		
-1	004-0282-00			2	. FRAME:PLASTIC FOAM	80009	004-0282-00
-2	004-0243-00			1	. PAD,CUSHIONING:FRONT	80009	004-0243-00
-3	004-0242-00			1	. PAD,CUSHIONING:REAR	80009	004-0242-00
-4	004-1093-00			1	. PAD,CUSHIONING:13.375 X 3.25 X 5.625"	80009	004-1093-00
-5	004-0612-00			1	. CARTON:16.50 X 6.625 X 9.125 INCHES	80009	004-0612-00