Tektronix®
COMMITTED TO EXCELLENCE

PLEASE CHECK FOR CHANGE INFORMATION AT THE REAR OF THIS MANUAL.

1412
PAL M GENERATOR

INSTRUCTION MANUAL

Tektronix, Inc.
P.O. Box 500
Beaverton, Oregon 97077

Serial Number _____

070-2323-00
Product Group 20

Microfiche scan by vintageTEK - Your donations help support the museum - vintagetek.org

First Printing OCT 1982

Copyright © 1977, 1982 Tektronix, Inc. All rights reserved. Contents of this publication may not be reproduced in any form without the written permission of Tektronix, Inc.

Products of Tektronix, Inc. and its subsidiaries are covered by U.S. and foreign patents and/or pending patents.

TEKTRONIX, TEK, SCOPE-MOBILE, and are registered trademarks of Tektronix, Inc. TELEQUIPMENT is a registered trademark of Tektronix U.K. Limited.

Printed in U.S.A. Specification and price change privileges are reserved.

Microfiche scan by vintageTEK - Your donations help support the museum - vintagetek.org

1412 PAL-M GENERATOR (SUPPLEMENT TO 1411 NTSC GENERATOR)

This supplementary manual contains information that pertains specifically to the 1412 PAL-M GENERATOR. The information in the supplemnent is intended to supplement information included in the 1412 PAL GENERATOR instruction manual.

TEXT CHANGES

Make the following changes to the Text:

1. Replace all occurrences of "1411" with "1412".

2. Replace all occurrences of "4.43361875 MHz" with "3.57561149 MHz".

3. Replace all occurrences of "SPG" or "SPG12" with "SPG22".

4. Replace all occurrences of "ITS" with "VITS".

5. Replace all occurrences of "TSG11" with "TSG21".

REPLACEABLE ELECTRICAL PARTS LIST CHANGES

Change the part numbers and values of C495, C484, and Y1026 as shown in the following table:

Ckt No.	Part No.	Name and Description
A13-2	670-4445-04	CKT BOARD ASSY: SUBCARRIER INPUT
C495	283-0618-00	CAP., FXD, MICA D:130PF, 2%,400V
C484	283-0640-00	CAP., FXD, MICA DI:160PF, 1%,100V
Y1026	158-0052-00	XTAL UNIT,QTZ:3.57561149 MHz, +1−5PPM

SECTION 10 DIAGRAMS CHANGES

Replace all occurrences of "1411" with "1412".

Block Diagram

1. Delete "SPG13" at the External Subcarrier input line.

2. Replace "SPG12" with "SPG22" at the Frequency Control line.

3. Replace "SPG's" with "SPG22" at the Subcarrier output line.

Diagram 1, Rear Interconnect

Replace all occurrences of "SPG11 or 12" with "SPG22" and delete "SPG13".

Diagram 2, Power Supply

Delete all ocurrences of "LM301".

Diagram 3, Subcarrier Input and Oscillator

1. Change the values for C495, C484, and Y1026 in diagram 3 as shown in the following table:

Diagram 3 Changes

Component	Old Value	New Value
C495	77pF	130pF
C484	105pF	160pF
Y1026	4.43361875 MHz	3.57561149 MHz

2. Replace all occurrences of "SPG11 & 12", "SPG12", "SPG11 or 12", and "SPG's" with "SPG22".

3. Delete all occurrences of "SPG13".

Accessories

1. Add Index No. −4, 334-3077-00, 1 MARKER, INDENT, LABELED: FACTOR SET 240 V, 100 V, 120 V, 220 V.

Microfiche scan by vintageTEK - Your donations help support the museum - vintagetek.org

TABLE OF CONTENTS

PART 1
OPERATING INFORMATION

SAFETY SUMMARY

SECTION 1 OPERATING INSTRUCTIONS Page

Description 1-1
Front-Panel Switch and Indicators 1-2
Rear-Panel Connectors 1-4

SECTION 2 SPECIFICATION & PERFORMANCE CHECK

Specification 2-1
Electrical Specification 2-1
Mechanical Specification 2-2
Environmental Characteristics 2-2
Performance Check 2-3
Test Equipment 2-3
Procedure 2-3

PART II
SERVICE INFORMATION

WARNING

THE FOLLOWING SERVICING INSTRUCTIONS ARE FOR USE BY QUALIFIED PERSONNEL ONLY. TO AVOID PERSONAL INJURY, DO NOT PERFORM ANY SERVICING OTHER THAN THAT CONTAINED IN OPERATING INSTRUCTIONS UNLESS YOU ARE QUALIFIED TO DO SO.

SECTION 3 INSTALLATION

Shipping Carton 3-1
Electrical Installation 3-1
Power Source 3-1
Mains Frequency & Voltage Ranges 3-1
Mains Conversion 3-1
Remote Switching 3-1
Operating Mode Selection 3-1
Circuit Board Extender 3-3

Microfiche scan by vintageTEK - Your donations help support the museum - vintagetek.org

TABLE OF CONTENTS (cont)

		Page
SECTION 3	**INSTALLATION (cont)**	
	Mechanical Installation	3-3
	Rackmounts	3-3
	Latching	3-3
	Thumbscrews	3-4
	Rackmounting	3-5
	Cabinet Models	3-7
SECTION 4	**SYSTEM CONFIGURATION**	
	Sync Pulse Generator & Test Module Interface	4-1
	Module Location	4-1
	Adding Additional Modules	4-1
	Module Outputs	4-4
	Sync Generator Outputs	4-4
	Remote Connector	4-4
	Sync Pulse Generator	4-4
	Test Modules	4-5
	Remote ITS Keying	4-5
	Internal ITS Keying	4-5
SECTION 5	**RECALIBRATION PROCEDURE**	
	Test Equipment	5-1
	Procedure	5-1
SECTION 6	**THEORY OF OPERATION**	
	Block Diagram Description	6-1
	Circuit Description	6-1
	Rear Interconnect	6-1
	Power Supply	6-1
	Subcarrier Input & Oscillator	6-3

Microfiche scan by vintageTEK - Your donations help support the museum - vintagetek.org

TABLE OF CONTENTS (cont)

		Page
SECTION 7	**MAINTENANCE**	
	Preventive Maintenance	7-1
	Cleaning	7-1
	Visual Inspection	7-1
	Recalibration	7-1
	Troubleshooting	7-1
	Diagrams	7-1
	Circuits Boards	7-1
	Circuit Board Extender	7-2
	Multi-Pin Connectors	7-4
	Resistor Colour Code	7-4
	Capacitor Markings	7-5
	Transistor & Integrated Circuit Basing	7-5
	Troubleshooting Hints	7-7
	Special Components	7-7
	Repair	7-8
	Soldering Techniques	7-8
	Parts Location	7-8
	Circuit Board Replacement	7-8
	Circuit Board Removal	7-8
	Replacement Components	7-9
	Interconnecting Pins	7-9
	Extracting Integrated Circuits	7-9
	Obtaining Replacement Parts	7-10
SECTION 8	**REPLACEABLE ELECTRICAL PARTS**	
SECTION 9	**SERVICE ILLUSTRATIONS**	
SECTION 10	**DIAGRAMS AND CIRCUIT BOARD ILLUSTRATIONS**	
SECTION 11	**REPLACEABLE MECHANICAL PARTS**	
CHANGE INFORMATION		

Microfiche scan by vintageTEK - Your donations help support the museum - vintagetek.org

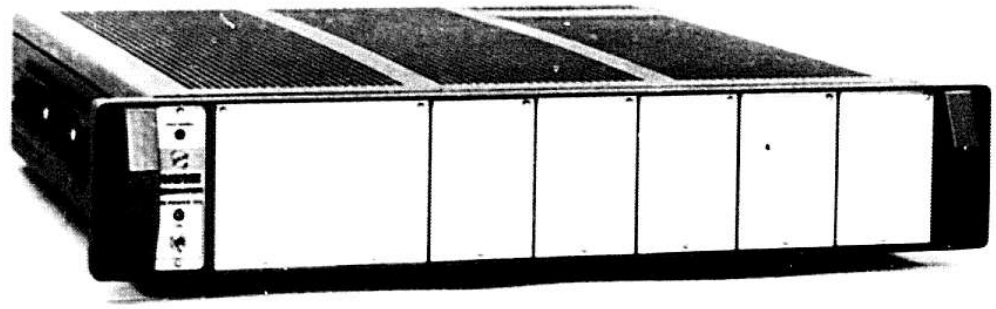

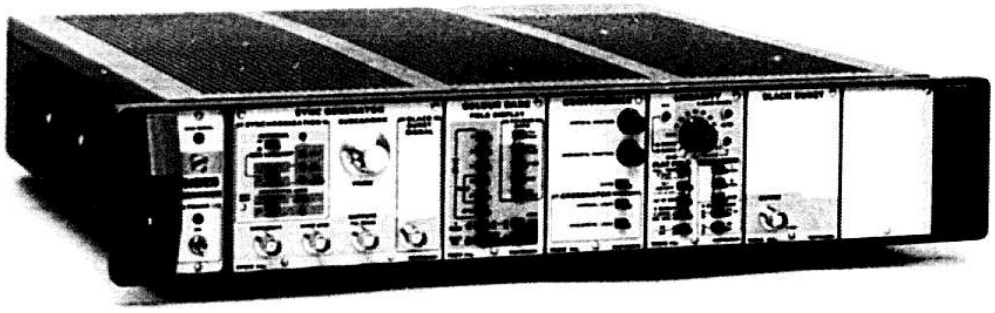

2322-00

Fig. 1-1. The 1411 TEST SIGNAL GENERATOR system.

Microfiche scan by vintageTEK - Your donations help support the museum - vintagetek.org

PART I
OPERATOR'S INFORMATION

SAFETY SUMMARY

This manual contains safety information which must be followed to ensure safe operation and maintenance of the 1411 Generator.

WARNING information is intended to protect personnel.

CAUTION information is intended to protect the instrument.

WARNING

To reduce electrical shock hazard, the instrument must be properly grounded. Use only the three-wire power cord supplied with the instrument.

WARNING

Electrical shock hazards are present inside this instrument. Do not remove the protective covers. Refer servicing to qualified personnel.

OPERATING INFORMATION

DESCRIPTION

The 1411 is a PAL Generator and as such, it is both a system (when it contains a Sync Pulse Generator [SPG] module and Test Signal Generator [TSG] modules) and an individual instrument. The 1411 Generator, excluding SPG and TSG modules, contains the system power supplies and an accurate subcarrier reference oscillator. The subcarrier oscillator is accurate to + or − 1 Hz.

The heart of the system concept is the 1411's Interface circuit board. It provides the flexibility required to allow for the loading of a wide range of TSG modules, plus the choice of one of several SPG modules. The board contains 22 columns of interconnect pins, for mounting sync and test modules, identified as plugs. The four rows of plugs at the left are always dedicated to SPG modules. When a dual-wide SPG, such as the SPG11 is employed, the next three rows of plugs are also used by the SPG.

Microfiche scan by vintageTEK - Your donations help support the museum - vintagetek.org

Fig. 1-2 shows a front view of the 1411, with no SPG or TSG modules installed. This illustration identifies the module locations. Location 0 is always used by the SPG, with the possible addition of position 1, if the SPG is dual width. Locations 1 through 6 are the TSG locations. Each of the six locations (1 through 6) has a rear-panel output connector assigned to it to be used as an output of the installed module's standard signal. For example, if location 2 contains a TSG11 (Colour Bars module) J2 on the rear panel should provide a Colour Bars Composite Video signal. The rear-panel J numbers, 1 through 6, are intended to be used with the location of the same number.

A 36 pin Remote connector, on the 1411 rear panel, allows direct control over a number of potential switching decisions. Three interface lines per module location (1-6) are wired directly to the Remote connector. In addition, six control lines, common to all locations are brought out to the connector. Seven of the remaining twelve lines are used with the SPG, either to drive status indicators or switch operating modes. Four pins of the Remote connector are unused, and the fifth is connected to chassis ground.

Additional information on the interfacing and remote connection is located in Section 4, SYSTEM CONFIGURATION.

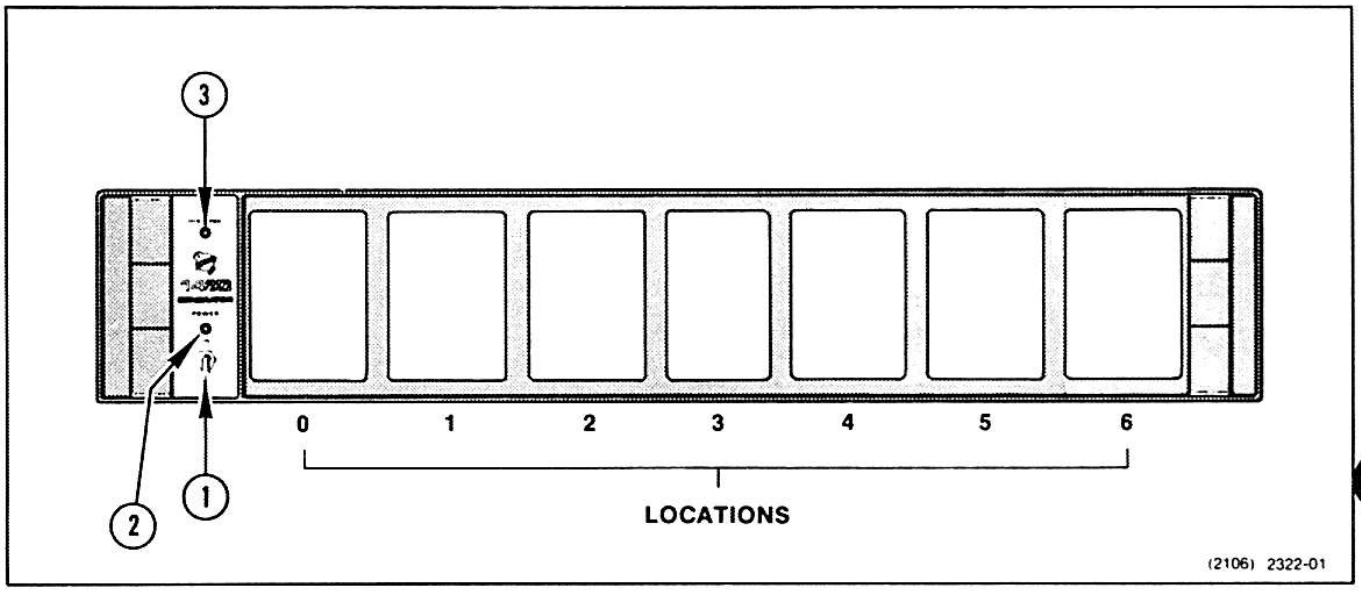

Fig. 1-2. Front panel details.

FRONT-PANEL SWITCH AND INDICATORS (Refer to Fig. 1-2)

Switch

(1) POWER Switch

Connects or interrupts mains voltage to the transformer primary circuit.

Front-Panel Indicators

(2) POWER

Illuminates when mains voltage is connected to the transformer primary circuit.

(3) OVEN TEMP

Illuminates to indicate that the crystal oscillator oven is at operating temperature.

Microfiche scan by vintageTEK - Your donations help support the museum - vintagetek.org

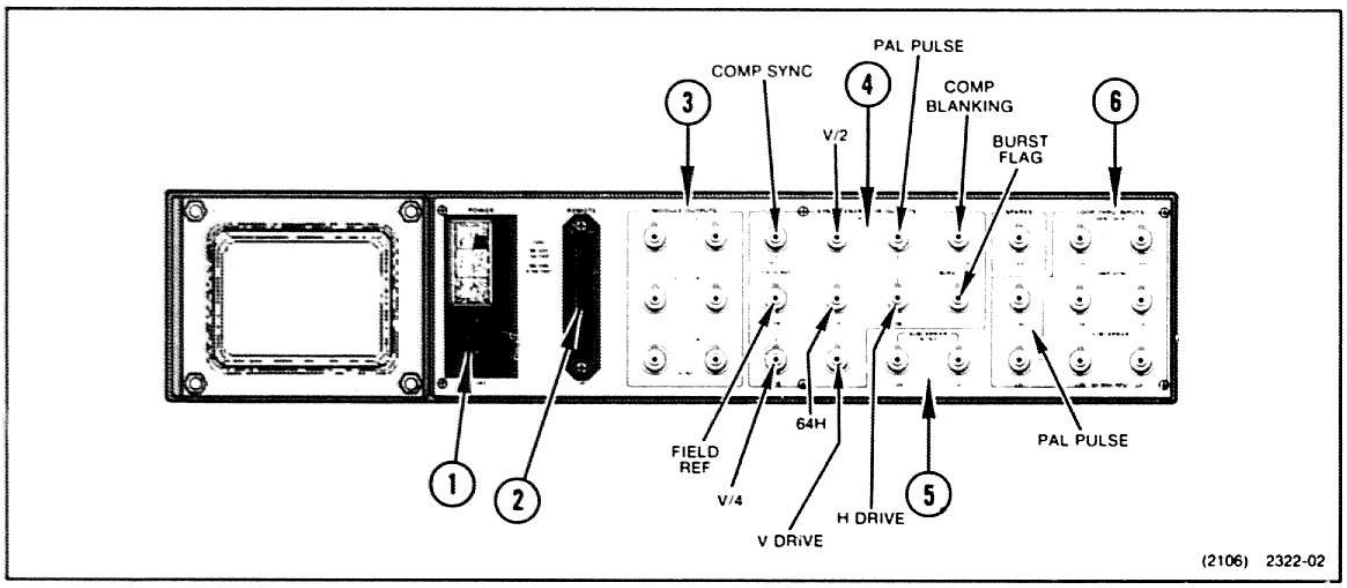

Fig. 1-3. Rear panel details.

Microfiche scan by vintageTEK - Your donations help support the museum - vintagetek.org

REAR-PANEL CONNECTORS (Refer to Fig. 1-3)

(1) J42 POWER connector-fuse holder

Contains the power cord receptacle, the fuse holder, and the mains voltage selector. Mains voltage selection is done via a plug-in circuit board. See Fig. 1-4 for details.

Fuse Data. Correct replacement fuse information is silk-screened on the rear-panel transformer cover, which is adjacent to the fuse holder.

(2) J41 REMOTE

This 36-pin connector provides access to switching functions. Refer operation through the REMOTE connector to qualified service technicians. Instructions on the use of the REMOTE input are located in Section 3, INSTALLATION and Section 4, SYSTEM CONFIGURATION.

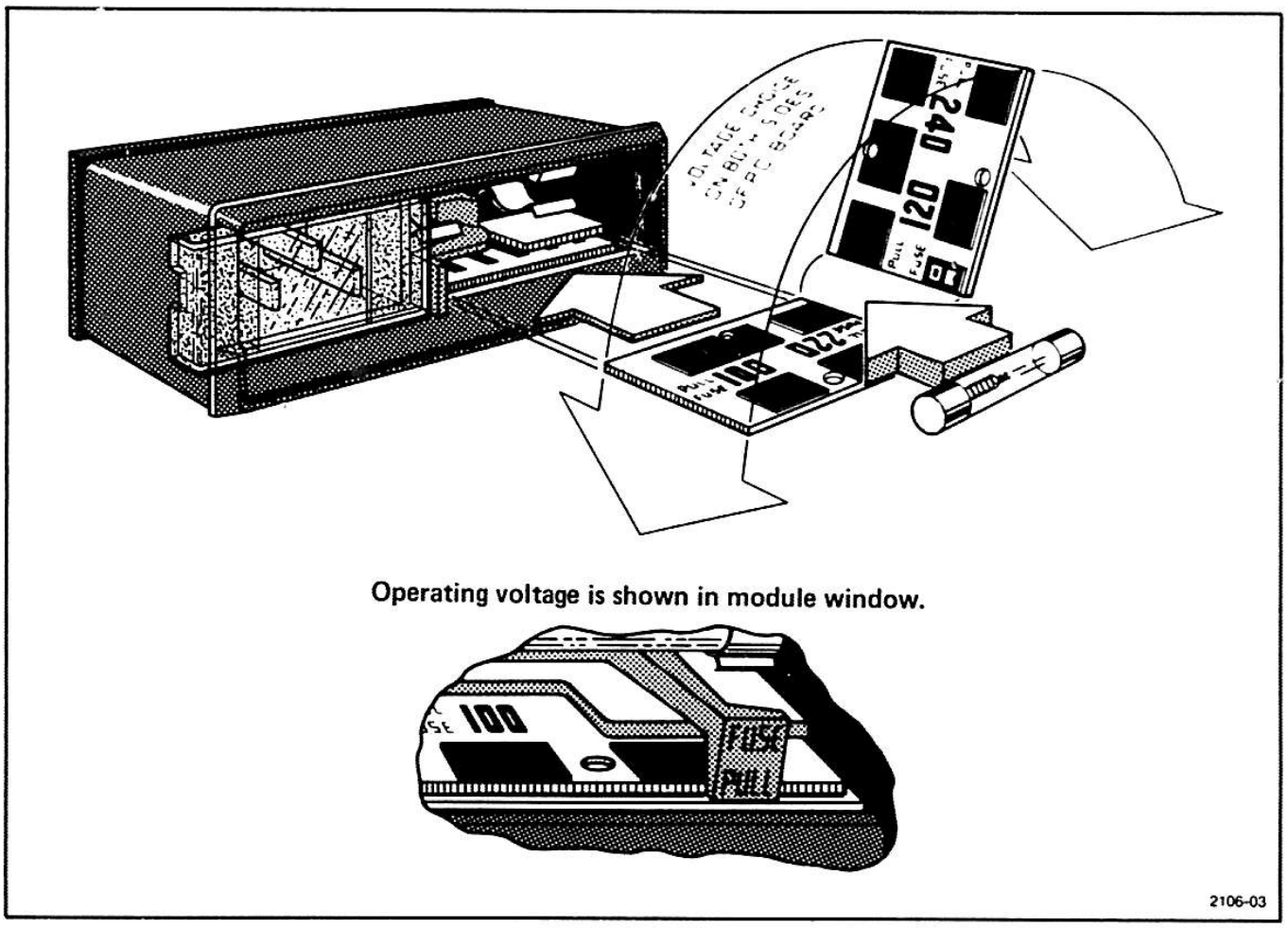

Fig. 1-4. Changing mains voltage.

Microfiche scan by vintageTEK - Your donations help support the museum - vintagetek.org

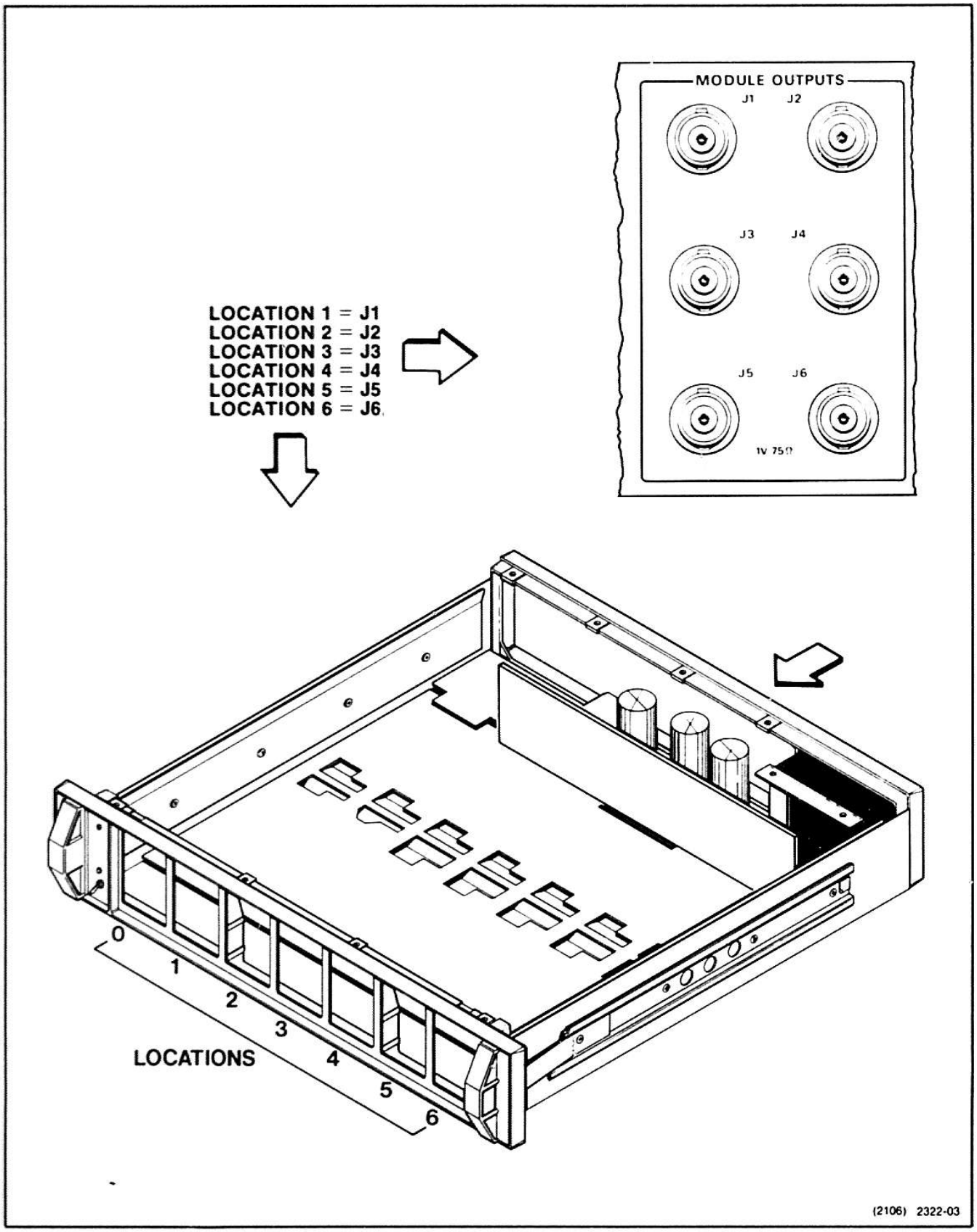

Fig. 1-5. Module locations and outputs.

Microfiche scan by vintageTEK - Your donations help support the museum - vintagetek.org

(3) J1-J6 MODULE OUTPUTS

The signal from any of the MODULE OUTPUT connectors depends on which test signal module is installed in a given mainframe location. Refer to Fig. 1-5 for location identification. With SPG11 or SPG12 mounted in locations 0 and 1, the output from J1 is always the Black Burst signal. With an SPG13 in location 0, any of the test signal modules can be installed in location 1. The signal at J1, in this case, is determined by the module in location 1. The other MODULE OUTPUT numbers relate directly to mainframe locations. If all Module locations are not used, the extra connectors may be connected to other modules for dual output.

(4) J10-J19 SYNC GENERATOR OUTPUTS

The SYNC GENERATOR OUTPUTS include drive, sync, and blanking signals generated by the SPG11 and SPG12. If the SPG13 is installed, no signals are present at these connectors. See the SPG11/SPG12 manual for signal details.

(5) J20 and J21 SUBCARRIER

These connectors provide 2 V peak-to-peak of 4.43361875 MHz subcarrier signal from the sync generator module. If the SPG11 or SPG12 is installed, the phase of the subcarrier at J20 and J21 is variable with the sync generator Subcarrier Phase control. With the SPG13 there is no subcarrier at these connectors.

(6) J32-J37 LOOP-THRU INPUTS

The loop-through inputs are high-impedance inputs compensated for 75 Ω, but not internally terminated. They permit locking the sync generator to external sources. The SPG11 may be locked to external sync and subcarrier. The SPG12 accepts sync and subcarrier, or can be gen-locked to external composite video. The SPG13 can be locked to external subcarrier only.

Microfiche scan by vintageTEK - Your donations help support the museum - vintagetek.org

SPECIFICATION & PERFORMANCE CHECK

This section contains the operating characteristics and performance requirements for the 1411 mainframe circuits and the procedure to verify all of these requirements, except for the power supply accuracies. Power supply accuracy is checked in the Readjustment Procedure located in Section 5, SPECIFICATION.

SPECIFICATION

The performance requirements listed here apply over an ambient temperature range of 0 to 50° C. The rated accuracies are achieved when the instrument has been calibrated at +20 to +30° C, after a minimum warm-up time of ten minutes. A twenty minute warm-up time is required for operation, within stated accuracies, at 0° C.

Table 2-1

ELECTRICAL SPECIFICATION

Characteristic	Performance Requirement	Supplemental Information
	SUBCARRIER	
Frequency (Fsc)	4.43361875 ±1 Hz	
Pull-In Range	Fsc ±20 Hz	
Subcarrier Input		
Amplitude	1.0 to 4.0 V p-p	
Frequency	4.43361875 MHz ±10 Hz	
Return Loss	≥46 dB to Fsc	
	POWER SUPPLY	
Supply Accuracy		
+15 V	15 V ±50 mV	
+5 V Analog	5 V ±50 mV	
+5 V Digital	5 V ±50 mV	
−15 V	−15 V ±25 mV	
Current Limit		
+15 V		1 A
+5 V Analog		1 A
+5 V Digital		3 A
−15 V		1.5 A

Microfiche scan by vintageTEK - Your donations help support the museum - vintagetek.org

Table 2-1 (cont)

Characteristic	Performance Requirement	Supplemental Information
	POWER SUPPLY (cont)	
Supply Ripple		Typical
+15 V		1 mV
+5 V Analog		1 mV
+5 V Digital		1 mV
−15 V		1 mV
Power Mains		
Voltage Range		
100 Vac		90—112 Vac
120 Vac		106—132 Vac
220 Vac		196—244 Vac
240 Vac		212—250 Vac
Crest Factor		at least 1.35
Maximum Power Consumption		130 W
Maximum current at 240 Vac 50 Hz		0.6 A
Frequency		47—63 Hz

Table 2-2

MECHANICAL SPECIFICATION

Characteristic	Supplemental Information
Length	19.2 inches (48.77 cm)
Width	19.0 inches (48.26 cm)
Height	3.47 inches (8.81 cm)
Weight (with modules)	33 lbs. 8 oz. (15.30 kg)
Weight (net)	21 lbs. 3 oz. (9.60 kg)

Table 2-3

ENVIRONMENTAL CHARACTERISTICS

Characteristic	Performance Requirement
Temperature	
Operating	0 to +50°C
Storage	−40 to +65°C
Altitude	
Operating	to 15,000 feet
Storage	to 50,000 feet

Microfiche scan by vintageTEK - Your donations help support the museum - vintagetek.org

PERFORMANCE CHECK

This procedure is to be used to verify that the 1411 is performing to specifications.

Control and connector names on the 1411 are capitalized in this procedure, for example: POWER. Controls and connectors on test equipment or any of the modules installed in the 1411 have only the first letter capitalized, for example: test oscilloscope Volts/Div, or sync generator Horizontal Lock.

TEST EQUIPMENT

The test equipment listed here was used in preparing this procedure. The measurement capabilities described are the minimum required to verify the performance of the instrument. Each piece of test equipment is assumed to be operating within its stated specification. If alternative test equipment is used, it must meet or exceed these requirements.

1. Test Oscilloscope

Dual Time Base. Range from 50 ns/div to 5 s/div with provisions for delaying sweep and television triggering.

Dual Trace Amplifier. Bandwidth dc to 30 MHz; minimum deflection factor 5 mV/div.

For example, a TEKTRONIX 7603 with 7B53A Dual Time Base and 7A18 Dual Trace Amplifier.

2. Frequency Counter

Capable of resolving 1/4 Hz out of 3 MHz. For example, a Hewlett-Packard 5326A Option 011.

3. 75-Ohm Cable (2)

42 inches long. Tektronix Part Number 012-0074-00.

4. 75-Ohm Feed-Through Termination (2)

Tektronix Part Number 011-0103-02.

5. Video Signal Source

Capable of producing 2 volts peak-to-peak of 4.43361875 MHz subcarrier signal, for example: a TEKTRONIX 145 or another 1411 system.

PROCEDURE

1. Check OVEN TEMP Operation

a. Connect the 1411 to an appropriate source of power.

b. Set the POWER switch on.

c. CHECK—The OVEN TEMP indicator should light within 6 minutes.

2. Check Subcarrier Frequency

For first time operation or after prolonged periods of inoperation, the 1411 should be left on for at least 2 hours prior to checking Subcarrier Frequency. This will re-age the crystal.

a. Connect the Sync Generator Subcarrier output through a 75-ohm cable and 75-ohm termination to the frequency counter.

b. CHECK—that subcarrier frequency is 4.43361875 ±1 Hz.

3. Check Subcarrier Amplitude

a. Move the cable and termination from the frequency counter to the test oscilloscope vertical input.

b. CHECK—that the subcarrier amplitude is between 1.8 and 2.2 volts peak-to-peak.

Microfiche scan by vintageTEK - Your donations help support the museum - vintagetek.org

WARNING

THE FOLLOWING SERVICING INSTRUCTIONS ARE FOR USE BY QUALIFIED PERSONNEL ONLY. TO AVOID PERSONAL INJURY, DO NOT PERFORM ANY SERVICING OTHER THAN THAT CONTAINED IN OPERATING INSTRUCTIONS UNLESS YOU ARE QUALIFIED TO DO SO. REFER TO OPERATORS SAFETY SUMMARY AND SERVICE SAFETY SUMMARY PRIOR TO PERFORMING ANY SERVICE.

Microfiche scan by vintageTEK - Your donations help support the museum - vintagetek.org

PART II
SERVICE INFORMATION

INSTALLATION

WARNING

THESE SERVICING INSTRUCTIONS ARE FOR USE BY QUALIFIED PERSONNEL ONLY. TO AVOID ELECTRICAL SHOCK, DO NOT PERFORM ANY SERVICING OTHER THAN THAT CONTAINED IN THE OPERATING INSTRUCTIONS UNLESS QUALIFIED TO DO SO.

SHIPPING CARTON

At installation time, save the shipping carton and packing materials for repackaging in case reshipment becomes necessary. Refer to Fig. 7-9.

ELECTRICAL INSTALLATION

Power Source

This instrument is intended to operate from a single-phase power source having one of its current-carrying conductors at or near earth ground (the neutral conductor). Only the Line conductor is fused for over-current protection. Systems that have both current-carrying conductors live with respect to ground (such as phase-to-phase on multi-phase systems) are not recommended power sources.

Mains Frequency and Voltage Ranges

The 1411 operates over a frequency range of 47 Hz to 63 Hz and at mains voltages of 110 Vac, 120 Vac, 220 Vac and 240 Vac.

A rear-panel voltage selector makes selection of any of these nominal voltages easy.

Mains Conversion

Mains voltage selection is accomplished by means of a small circuit board in the power connector-fuse holder assembly A6 on the 1411 rear panel. See Fig. 3-1.

To change mains voltage ranges, remove the power cord, open the cover, and pull the fuse lever down.

Insert a pointed tool in the hole at the edge of the voltage change board and pull gently out of the holder.

Orient the voltage-change circuit board so that the desired mains voltage will appear in the notch in the holder and insert the board. Set the fuse-pull lever back to its normal position and insert the correct fuse in the fuse holder.

Remote Switching

J41 on the 1411 rear panel provides access to the plug-in modules for remote switching functions. See Fig. 3-2 for pin locations. See Section 4 for a detailed discussion of remote operation.

The male plug for the REMOTE connector is Tektronix Part Number 131-0293-00.

Operating Mode Selection

Subcarrier Input board A13 has a three-pin plug-jumper, P484, that must be positioned correctly for the installed Sync Pulse Generator.

Microfiche scan by vintageTEK - Your donations help support the museum - vintagetek.org

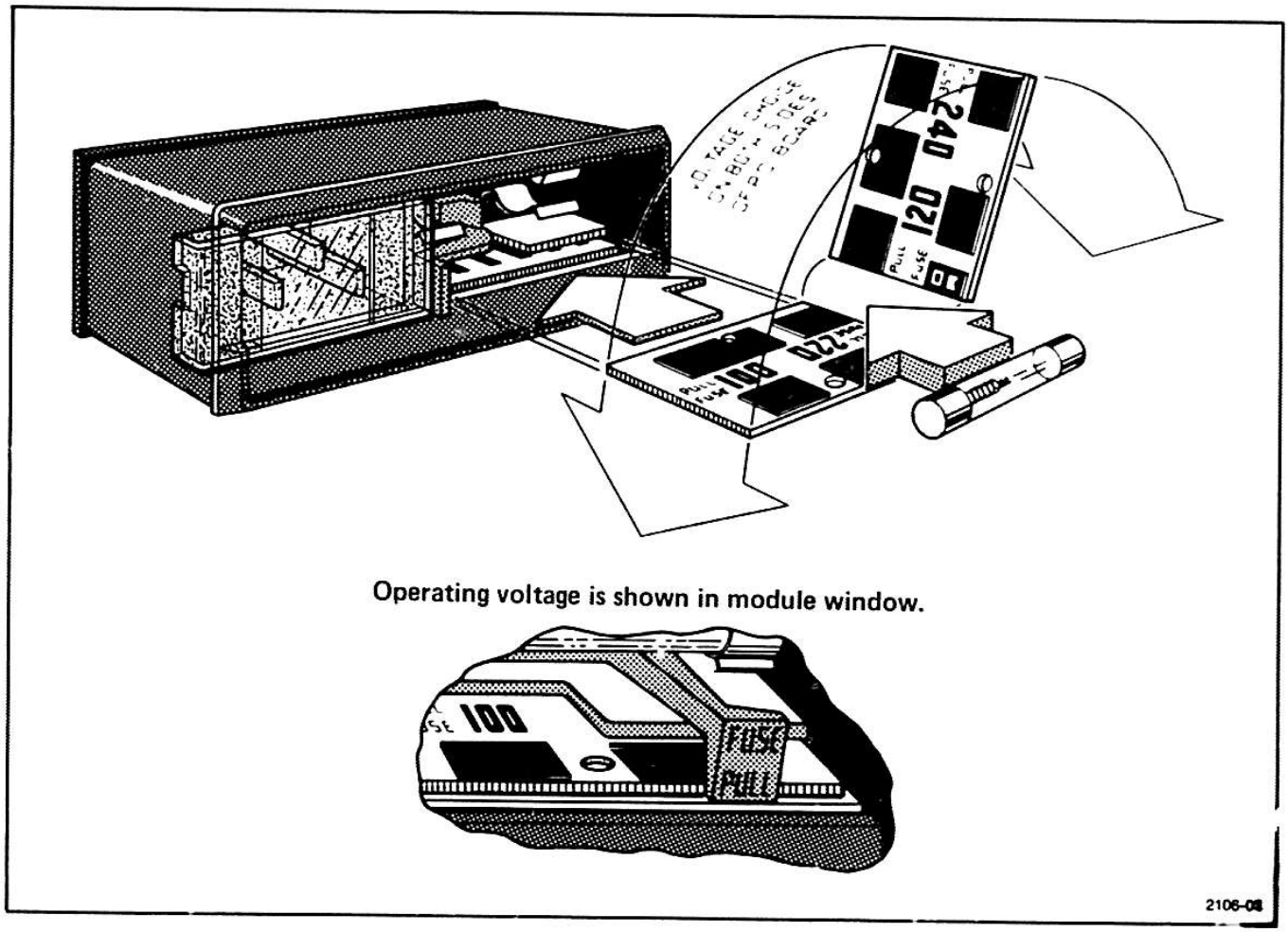

Fig. 3-1. Changing mains voltage.

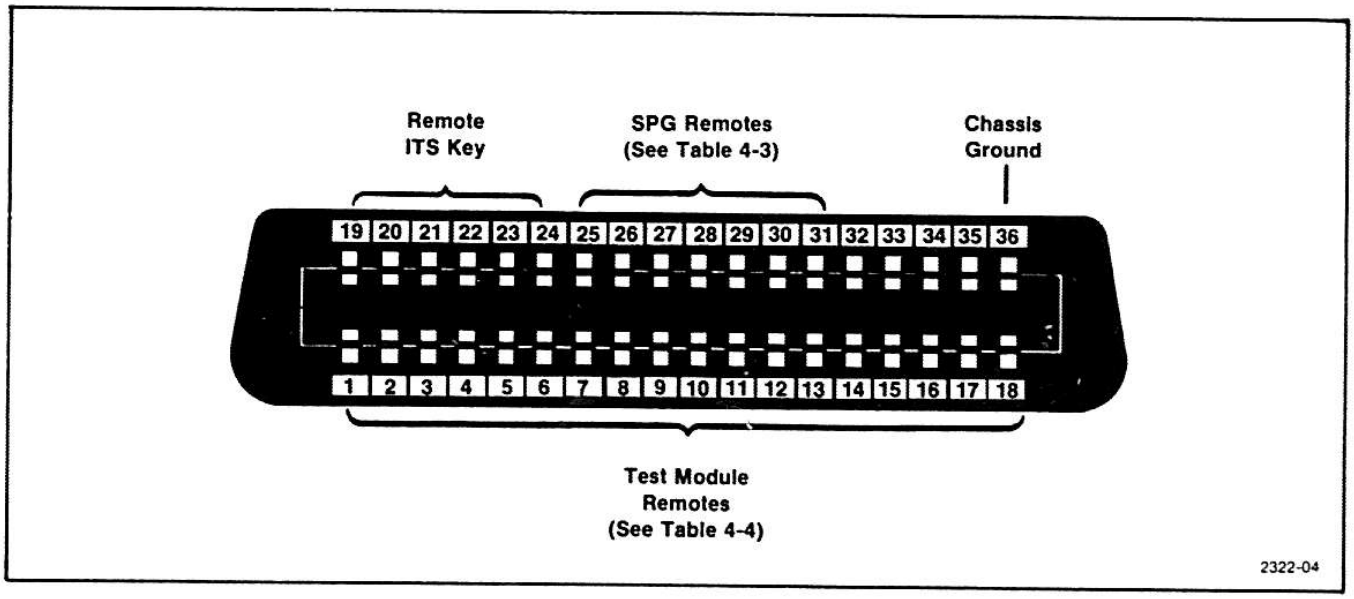

Fig. 3-2. J41 Remote connector.

Microfiche scan by vintageTEK - Your donations help support the museum - vintagetek.org

When an SPG with subcarrier lock, (an SPG12), is used, Subcarrier frequency adjustment is made through the SPG. Position P484, on the Subcarrier Input circuit board, to the 1-2 position. See Fig. 3-3.

For Sync Pulse Generators without subcarrier lock, the plug-jumper on P484 is installed in the 2-3 position. See Fig. 3-3.

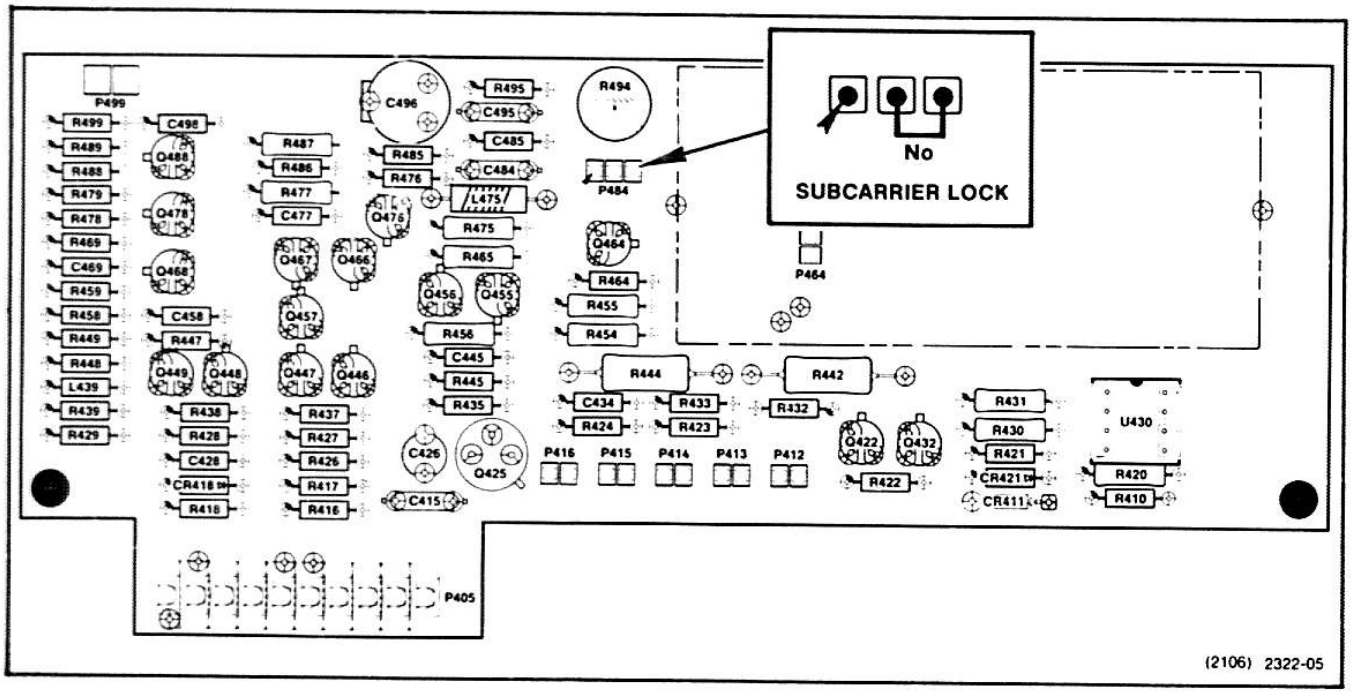

Fig. 3-3. Subcarrier operating mode.

Circuit Board Extender

The 1411 comes with a Circuit Board Extender that is reversible. By changing a set of pins, it can be configured to accommodate either left- or right-facing circuit boards. In most cases, the Circuit Board Extender is physically mounted in an empty test signal module; however, if all the 1411 locations are full, the extender will be with the systems Instruction Manual. Fig. 3-4 shows the Circuit Board Extender mounted in the instrument. Fig. 3-5 shows the Circuit Board Extender, with the pins in the stored position.

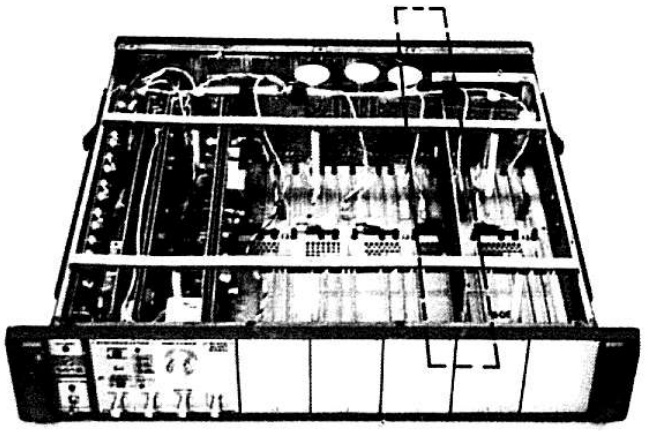

Fig. 3-4. Circuit Board Extender, stored.

MECHANICAL INSTALLATION

Rackmounts

Latching. The 1411 incorporates a spring-latch design built into the rack handle. To release, grasp the handles, press the latch knobs toward the center of the instrument and pull the 1411 forward. To re-latch, push the 1411 in until the spring-latches catch.

Microfiche scan by vintageTEK - Your donations help support the museum - vintagetek.org

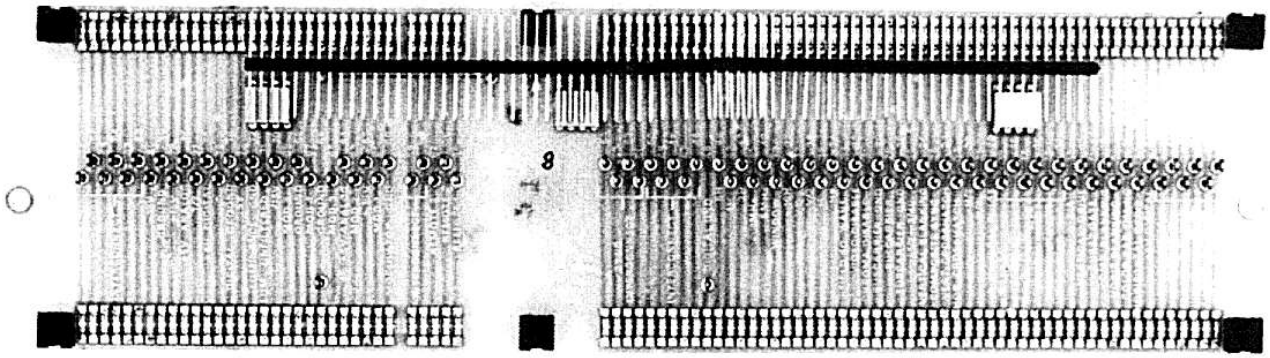

Fig. 3-5. Circuit Board Extender.

Thumbscrews. If additional latch strength is needed, the front castings have mounting holes for thumbscrew hold-downs (not supplied with the 1411). To gain access to these mounting holes, remove the cover plates under each handle by removing the two screws holding each assembly on. Remove the cover plates and reinstall handles with these same screws. See Fig. 3-6 for mounting-hole details.

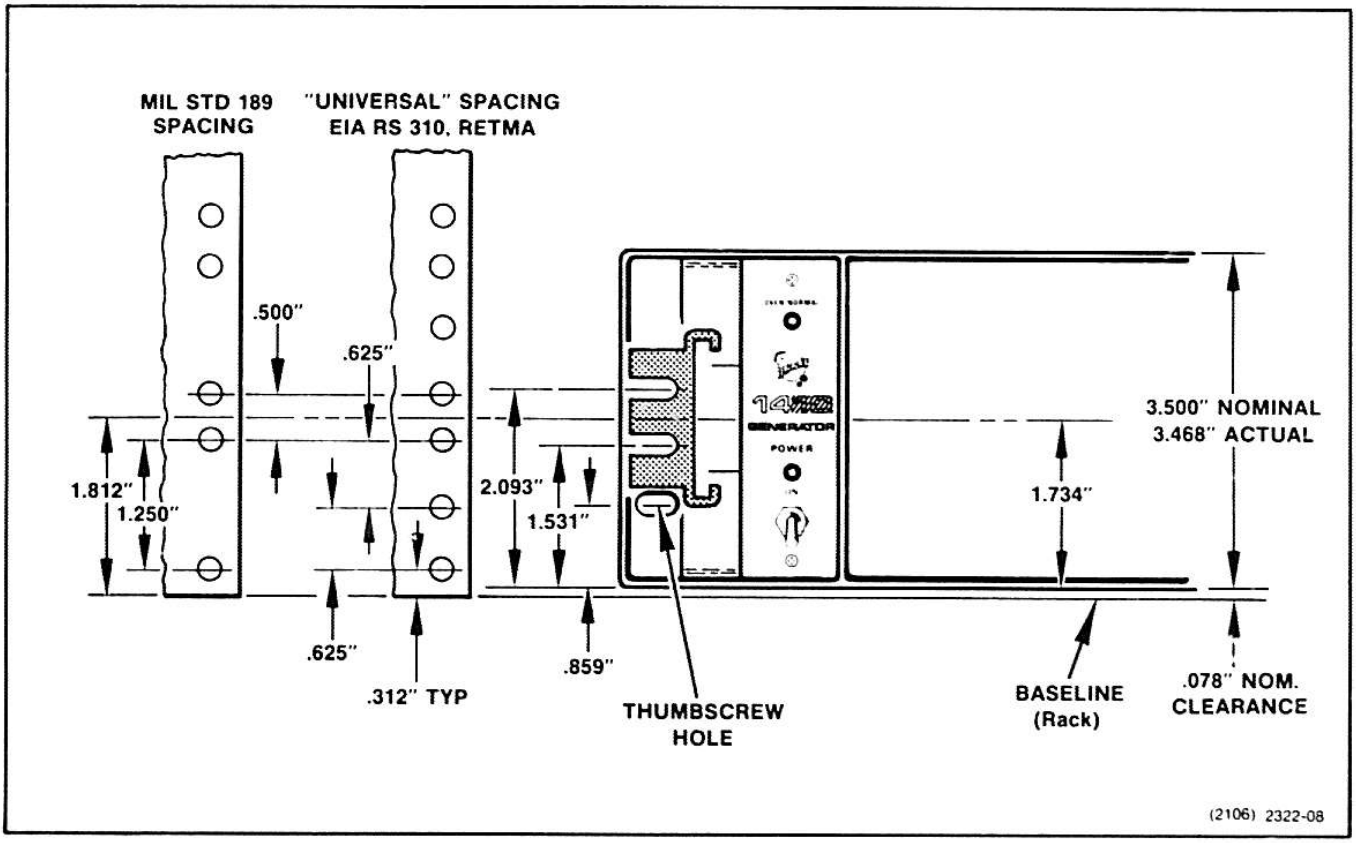

Fig. 3-6. Rackmount hole spacing.

Microfiche scan by vintageTEK - Your donations help support the museum - vintagetek.org

NOTE

Because of the spring-latch feature, the 1411 cannot be racked in already installed stationary slide sections unless thumbscrew hold-downs are used. The slide tracks supplied with the 1411 are required to accommodate the spring latches. The new slides provide a cut-out in the stationary section to catch the shoulder of the spring latch. See Fig. 3-7.

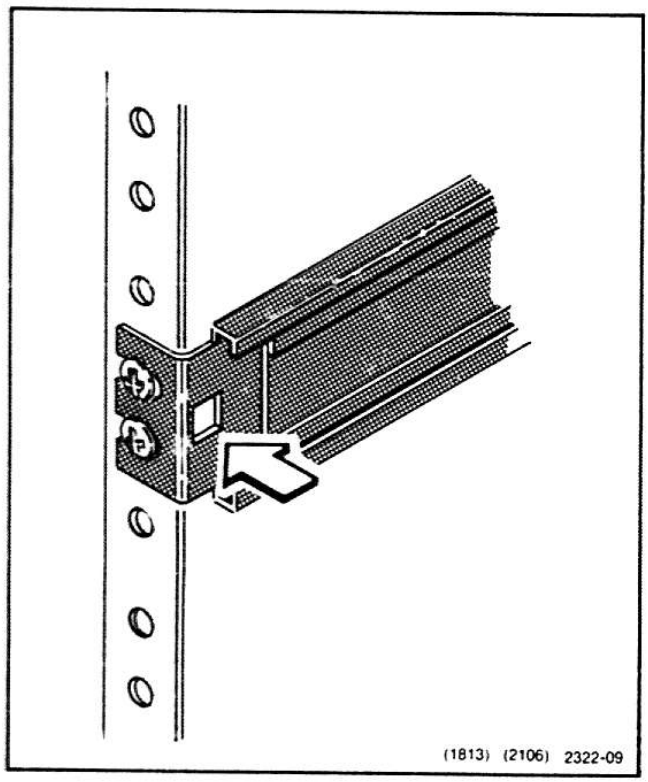

Fig. 3-7. Spring latch catch.

Rackmounting. The 1411 will fit most commercial consoles and 19-inch wide racks whose rail holes conform to universal spacing. See Fig. 3-6 for hole-spacing details.

Allow at least 2 inches of clearance between the 1411 rear panel and the rack enclosure to ensure an adequate supply of cooling air.

The slide-out tracks mount easily to the rack front and rear vertical mounting rails if the inside distance between the rails is within 10 1/2 to 24 1/2 inches.

Some means of support (for example, extensions to the rear mounting brackets) is needed for the rear ends of the slide-out tracks, if the tracks are going to be installed in a rack whose inside dimension is not within 10 1/2 and 24 1/2 inches. See Fig. 3-8.

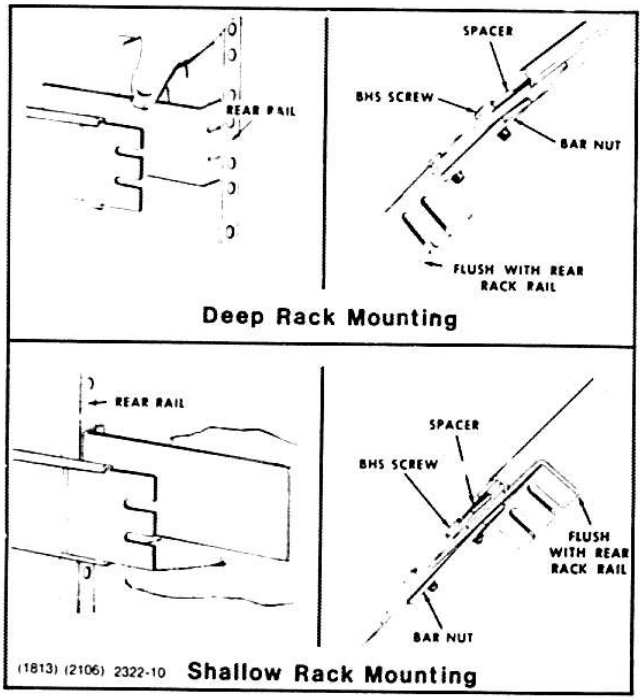

Fig. 3-8. Mounting slide tracks to accommodate various rack depths.

The 1411 is 3.5 inches high, a multiple of 1.75 inches, the standard rack spacing. As long as the 1411 is positioned in the rack some multiple of 1.75 inches from bottom or top, all the holes should line up and no drilling will be necessary.

Microfiche scan by vintageTEK - Your donations help support the museum - vintagetek.org

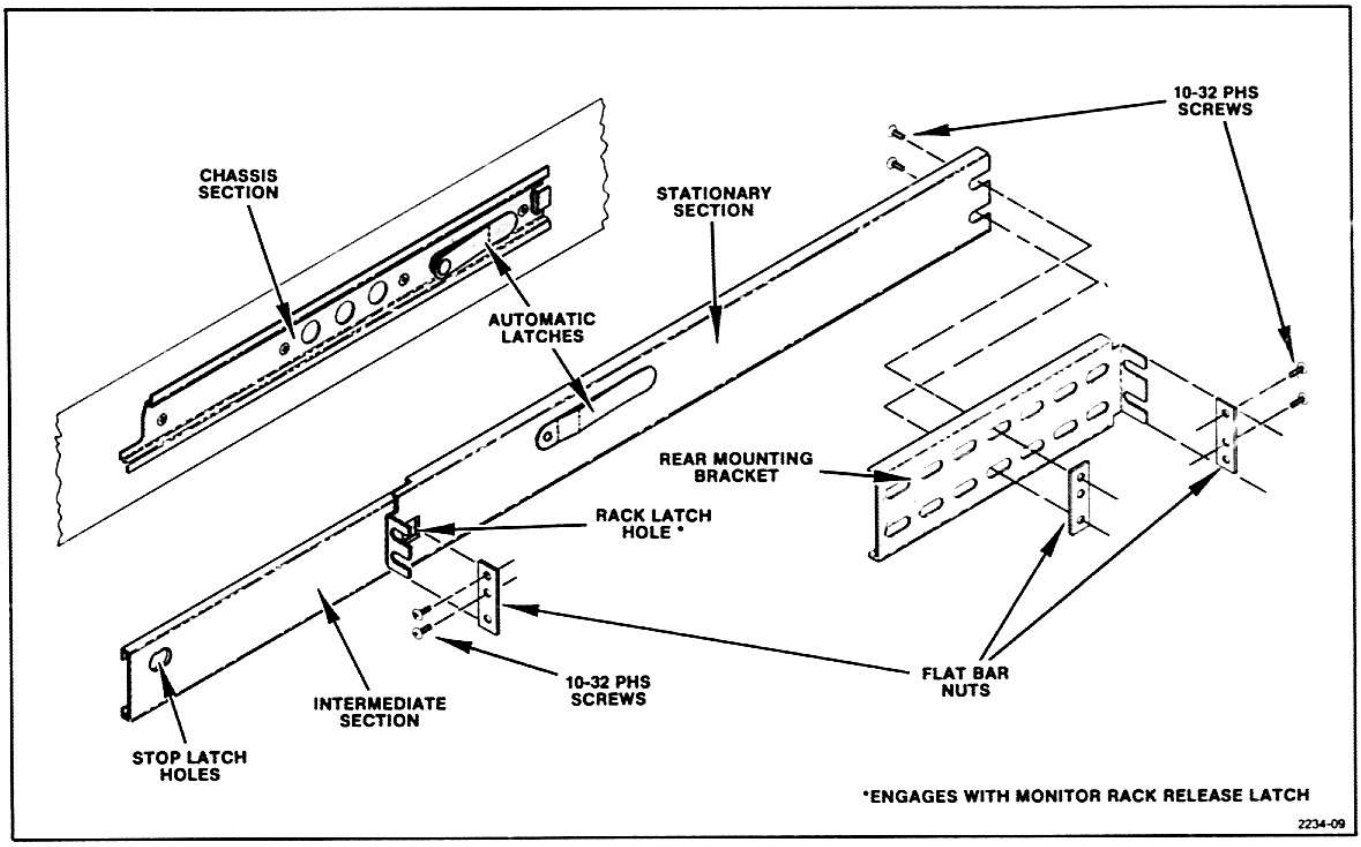

Fig. 3-9. Rackmounting hardware.

The dimensions of the opening between front rack rails must be at least 17 5/8 inches. The front lip of the stationary track section mounts in front of the rail. Use bar nuts behind untapped front rails. The front lip of the stationary track section must mount in front of the front rail to allow the 1411 spring latch to function properly.

The slide-out tracks consist of two assemblies, one for each side of the instrument. Each assembly consists of three sections. See Fig. 3-9. The stationary section of each track attaches to rack rails as illustrated in Fig. 3-10. The chassis section mounts on the instrument and is installed at the factory. The intermediate section fits between the other two sections, allowing the instrument to be fully extended out of the rack.

Microfiche scan by vintageTEK - Your donations help support the museum - vintagetek.org

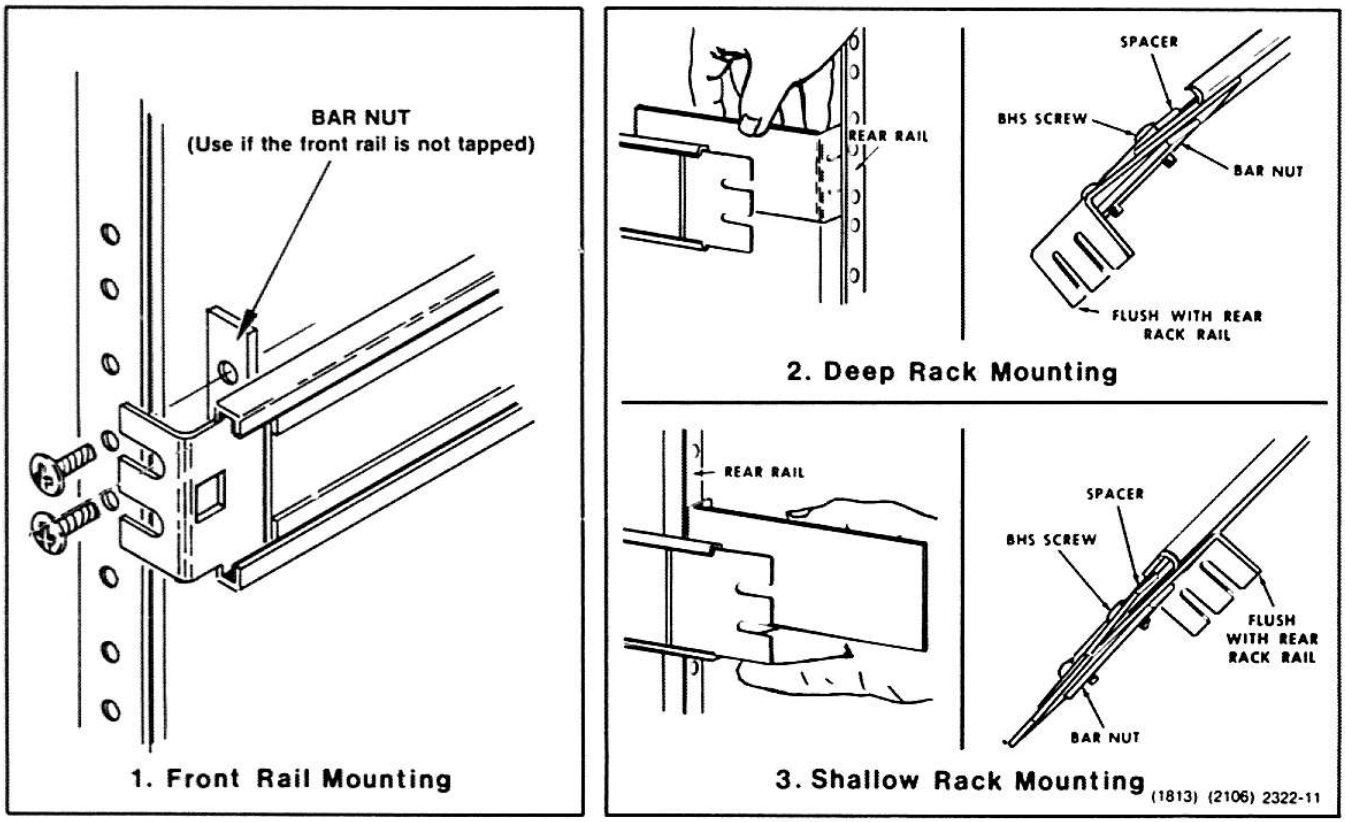

Fig. 3-10. Mounting stationary sections.

The stationary and intermediate sections for both sides are shipped as a matched set and should not be separated. The package includes matched sets for both sides, and mounting hardware. To identify the assemblies, note that the automatic latch and intermediate section stop are located near the top of the matched sets when properly mated to the chassis sections.

To mount the instrument in a rack, select the appropriate holes in the rack rail, using Fig. 3-6 as a guide.

Mount the stationary track sections to the front rack rails with pan head screws (and bar nuts) if the rails are not countersunk. Use flat head screws (and bar nuts) if the rails are countersunk.

Mount the stationary track sections to the rear rails, using one of the methods in Fig. 3-10. Note that the rear mounting bracket can be installed to fit either a deep or shallow cabinet rack.

After mounting the instrument in the slide-out tracks, adjust for proper width by loosening the front screws and allowing the slides to seek the proper width. Be sure that the instrument is centered, and re-tighten the screws.

When the instrument is pushed into the rack, an automatic spring latch engages the back of the front rack rail to hold the instrument in place. To extend the instrument out of the rack, just press in the spring latch on each handle and pull the instrument out.

See Fig. 3-11a for a dimensional drawing of 1411 rackmount.

Cabinet Models

1411 cabinet models use the same chassis as the rackmount, the differences being that the rackmount chassis slide section is removed and plastic sides are installed. The left side includes a carrying handle. See Fig. 3-11b for a dimensional drawing of a 1411 cabinet model.

Microfiche scan by vintageTEK - Your donations help support the museum - vintagetek.org

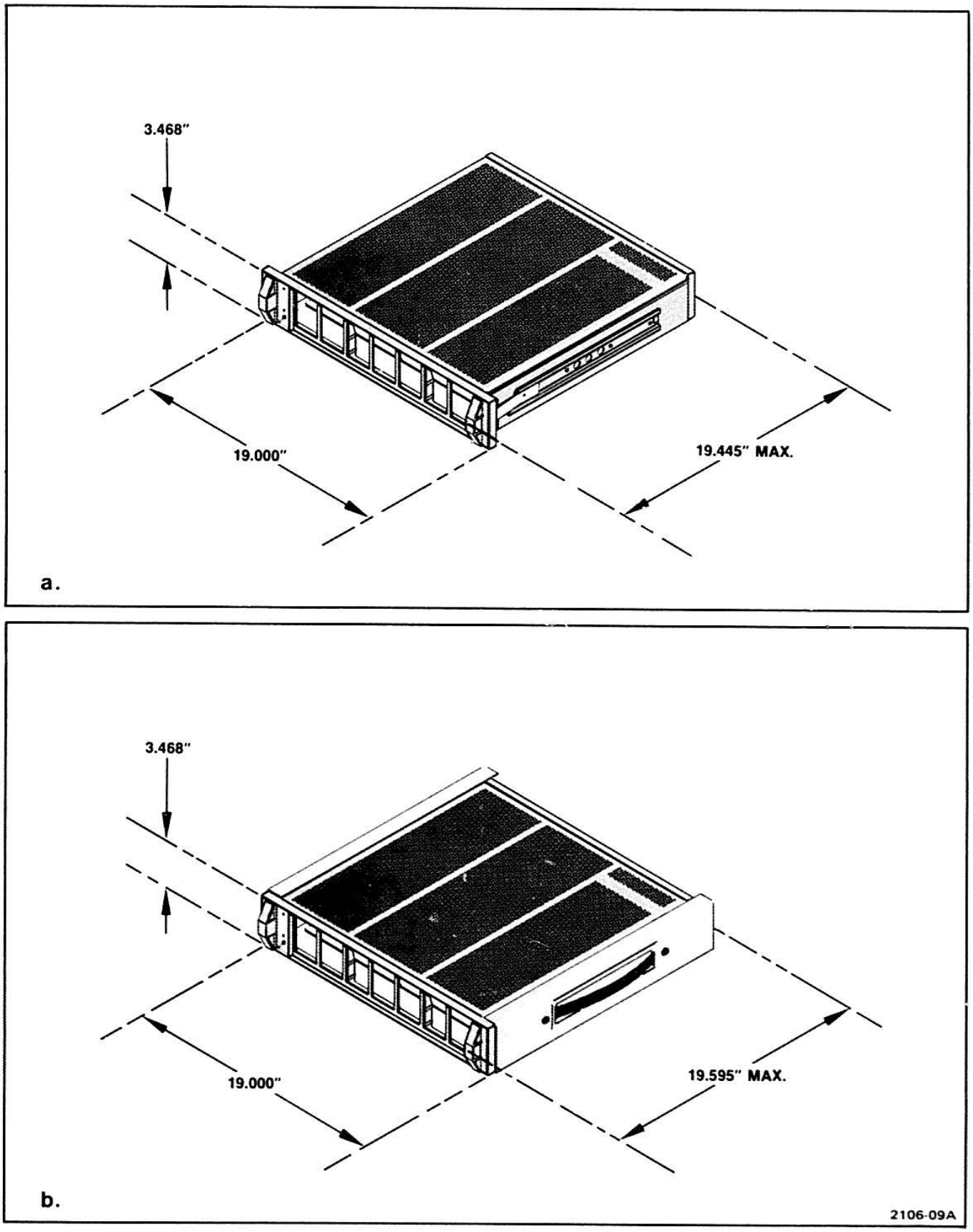

Fig. 3-11. a. 1411 Rackmount dimensions. b. 1411 Cabinet model dimensions.

Microfiche scan by vintageTEK - Your donations help support the museum - vintagetek.org

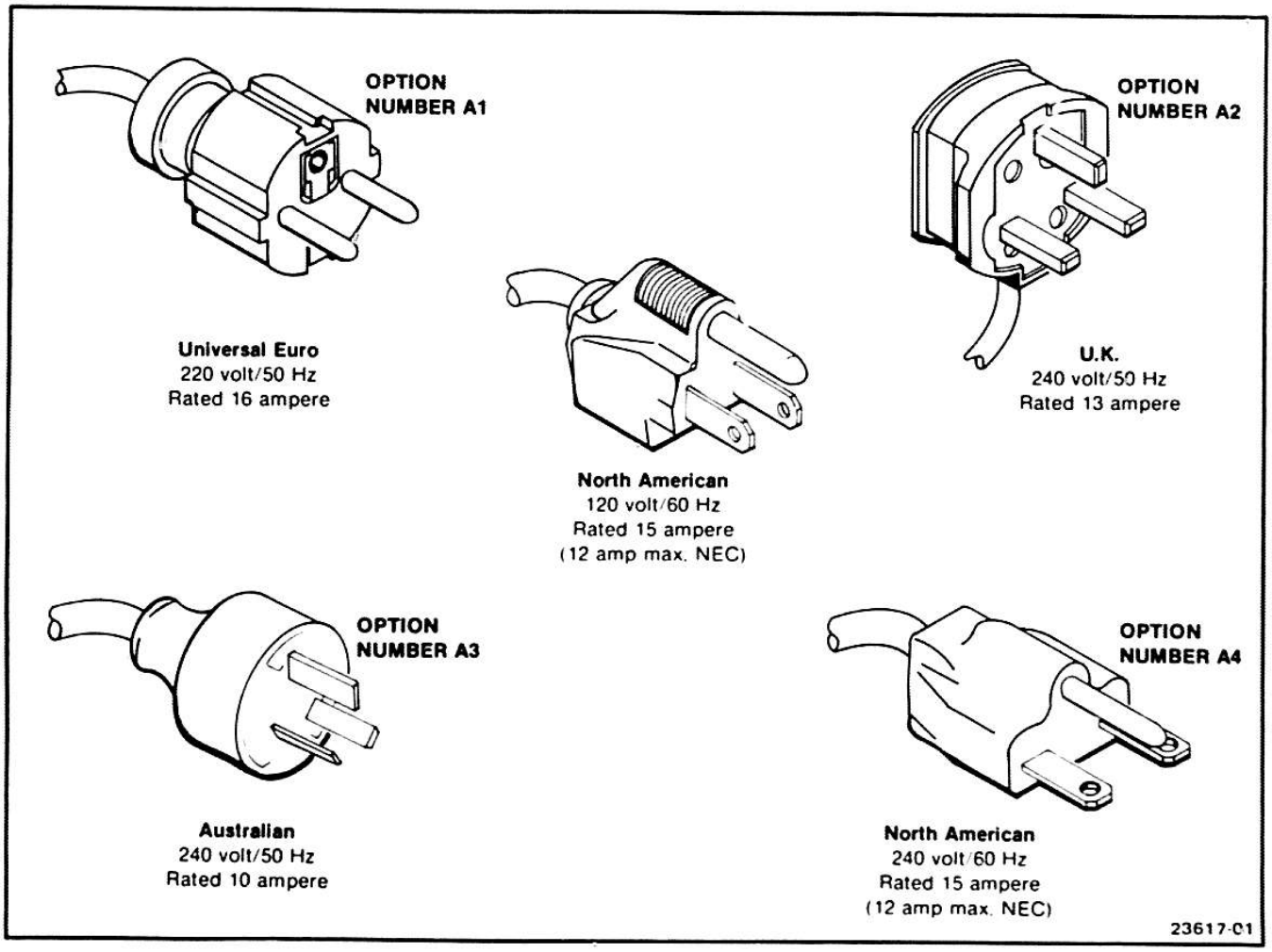

Fig. 3-12. Power Plug Options

Microfiche scan by vintageTEK - Your donations help support the museum - vintagetek.org

SYSTEM CONFIGURATION

This section details the operation of the 1411 as a signal generating system, capable of generating accurate sync and timing signals and a wide range of test signals.

Sync Pulse Generator and Test Module Interface

The 1411, when it contains signal modules, is a system. As a system, its central element is the Interface etched-circuit board. The Interface board consists of 22 full-length plugs, numbered from P51 through P72. In addition, three plugs, P51A, B, and C are used to connect to the Sync Pulse Generator location, location 0 (P51-P54).

P73 connects the Power Supply circuit board to the Interface board, taking care of the interconnections of system grounds and power supplies.

P74 connects the Subcarrier Input circuit board, including the oven to the remainder of the 1411 circuits.

Interface board pins 0-5, 46-50, 58-59, and 82-86, plus 61, 63, 65, 67, 69, 71, 73, 75, and 77 are used to connect the circuit boards used to make up an individual module.

Power supply assignments are listed in Table 4-1.

Table 4-1

POWER SUPPLY INTERFACE

Supply	Pin Numbers
−15 V	70 & 81
+15 V	62 & 79
+ 5 V Analog	64 & 78
+ 5 V Digital	6 & 76
Gnd Digital	45 & 74
Gnd Analog	66, 68 & 80

Subcarrier is routed through the Interface board on line 29, which is accompanied by two subcarrier ground lines, 28 and 30.

Fig. 4-1 shows the Interface circuit board and outlines the use of each line connected to the module plugs.

Module Locations

Because of the flexibility of a system like the 1411, it is necessary to refer to sets of pin connectors or plugs (P51 through P72) as module locations. Fig. 4-2 shows the 1411 mainframe with location numbers.

Location 0 must always contain a Sync Pulse Generator (SPG) module. When a dual-width SPG is used, location 1 is also occupied by that SPG. The use of location 1, then is optional depending on the SPG that is used.

Locations 2 through 6 always contain Test Signal Generator (TSG) modules or remain blank, depending on the selection of modules for an individual 1411. The system Instruction Manual, shipped with that individual system will always reflect the modules that make up that system.

Other than the location of the SPG, there is no requirement on where in the 1411 mainframe a particular test module must be placed.

Adding Additional Modules

As test signal needs change, the 1411 can be updated to include new test signal modules. New or replacement modules can be installed with relative ease. The procedure for installing a new module, or shifting the location of an existing module to a new location is virtually the same.

Remove front panel knobs and the current front panel segment. Remove the etched-circuit boards (making up the old module, if one was installed) and put in the new circuit boards, according to the module's Instruction Manual. Perform the brief Installation Calibration Procedure for the new test module.

Microfiche scan by vintageTEK - Your donations help support the museum - vintagetek.org

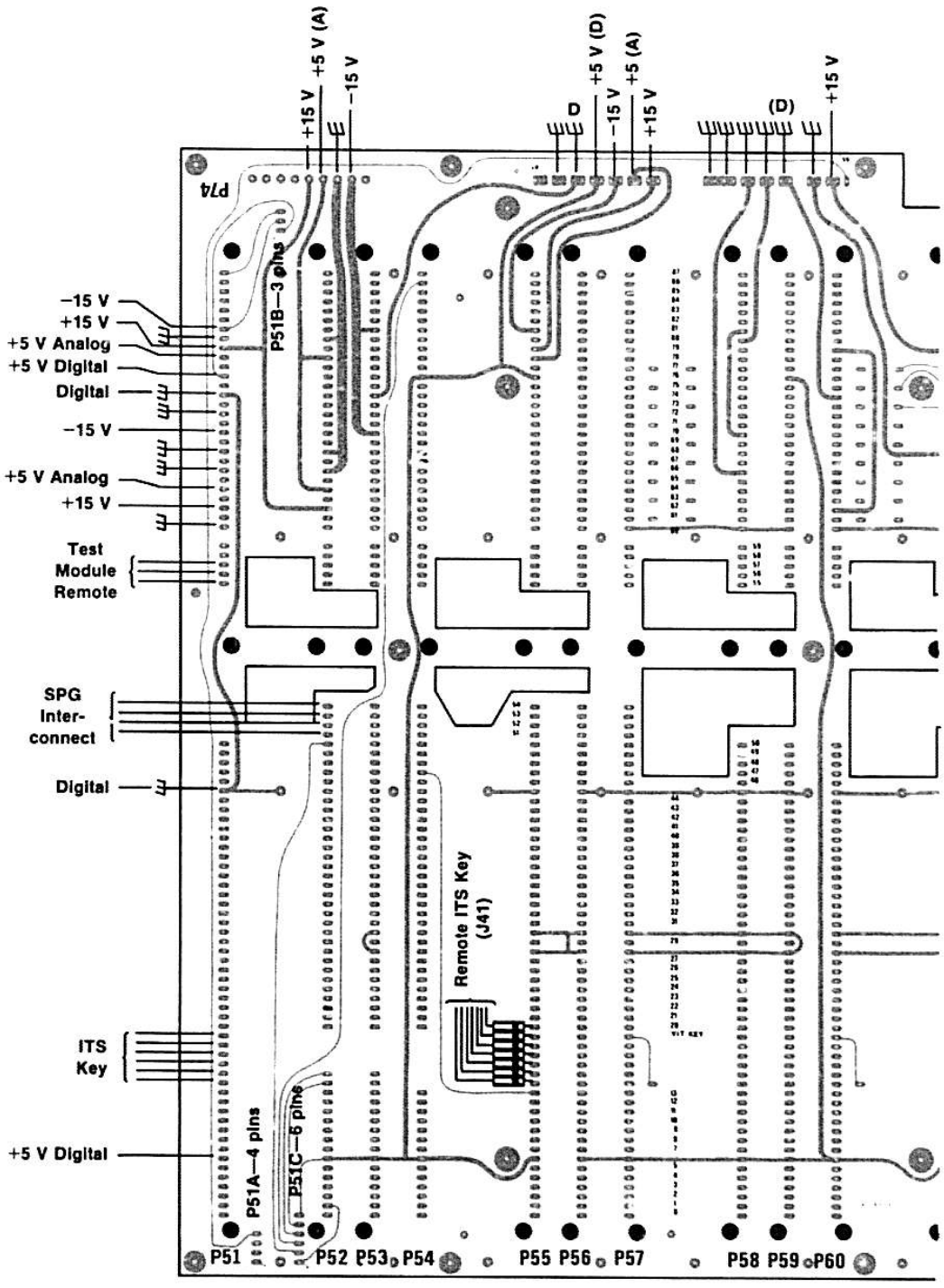

SIGNAL INTERCONNECT (from SPG)

SIGNAL	PIN
H Drive	7
Color Bar Timing	8
H Blanking	9
Composite Blanking	10
Burst Gate	11
V Drive	12
Pal Pulse	20
H/4	21
H/2	22
H Convergence	23
V Convergence	24
Composite Sync	25
V Blanking	26
1/2 - 3/4 V Split	27
Ground (Subcarrier)	28
Subcarrier	29
Ground (Subcarrier)	30
Chroma Disable	31
Video Disable	32
Field Squarewave	33
H*	34
H	35
V/2	36
V/8	37
16H	38
Window	39
5 MHz	40
1 MHz	41
2H	42
4H	43
8H	44

Fig. 4-1A. 1411 Interface Circuit Board.

Microfiche scan by vintageTEK - Your donations help support the museum - vintagetek.org

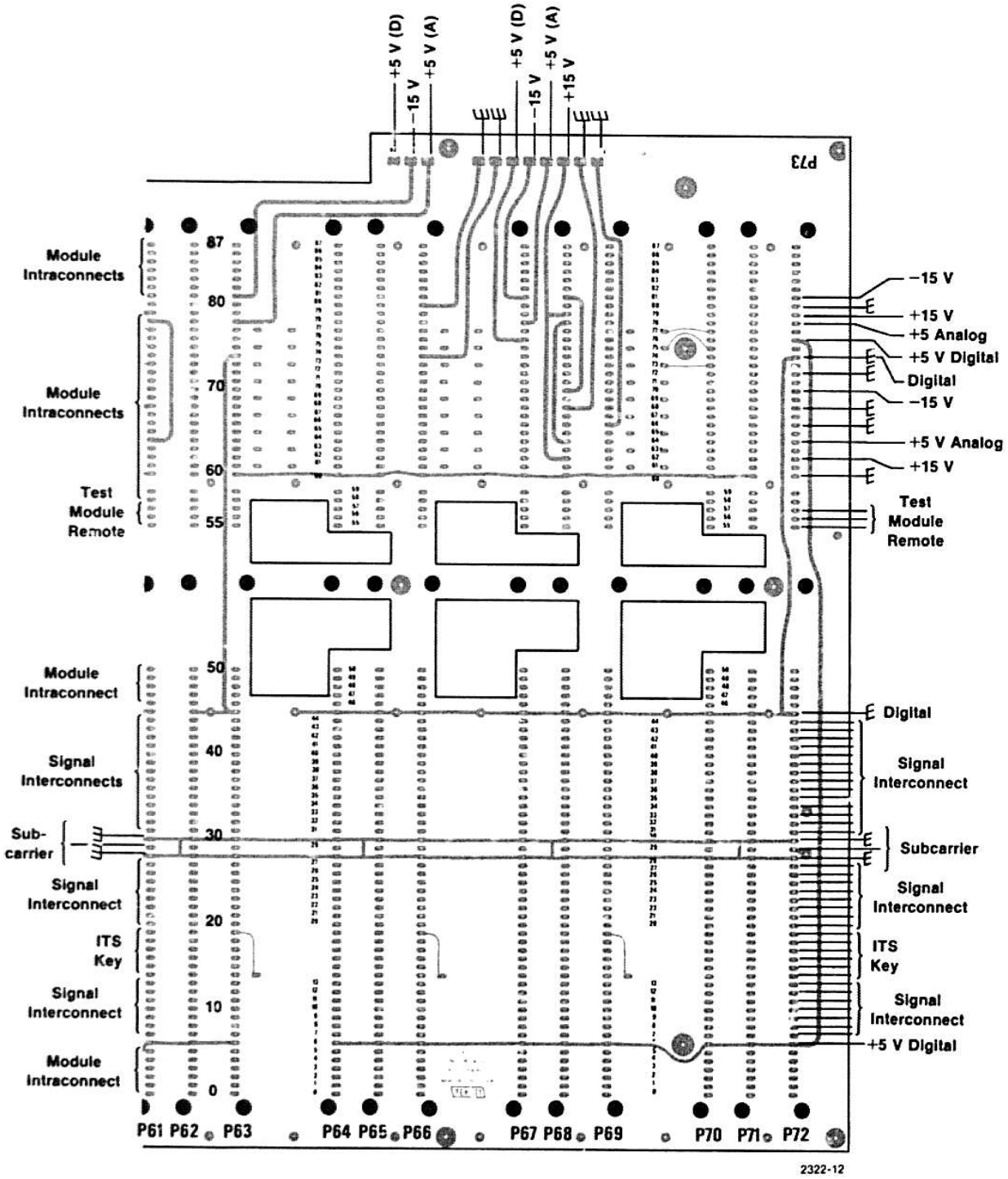

Fig. 4-1B. 1411 Interface Circuit Board (cont).

Microfiche scan by vintageTEK - Your donations help support the museum - vintagetek.org

Module Outputs

Rear panel jacks J1 through J6 are intended for the output of the test module occupying the corresponding location. Cables and plugs that connect to the modules are color coded (EIA code: brown=1, red=2, etc.) to ensure connection to the correct test module.

When the dual-width SPGs are used, J1 will contain a signal from the SPG. With a single-width SPG, location 1 is a test signal module location, and will have the output signal of that module. See Fig. 4-2.

Remote Connector

Sync Pulse Generator. Seven REMOTE connector pins are dedicated to SPG remote operation. They are pins 25 through 31, and are used differently by each of the SPGs. When considering remote operation of the 1411, consult the specific SPG's Instruction Manual to determine what functions are performed by the remote inputs. Table 4-2 is a specific example of how the SPG12 is remote controlled. The table includes the connector pin number and what it is used for.

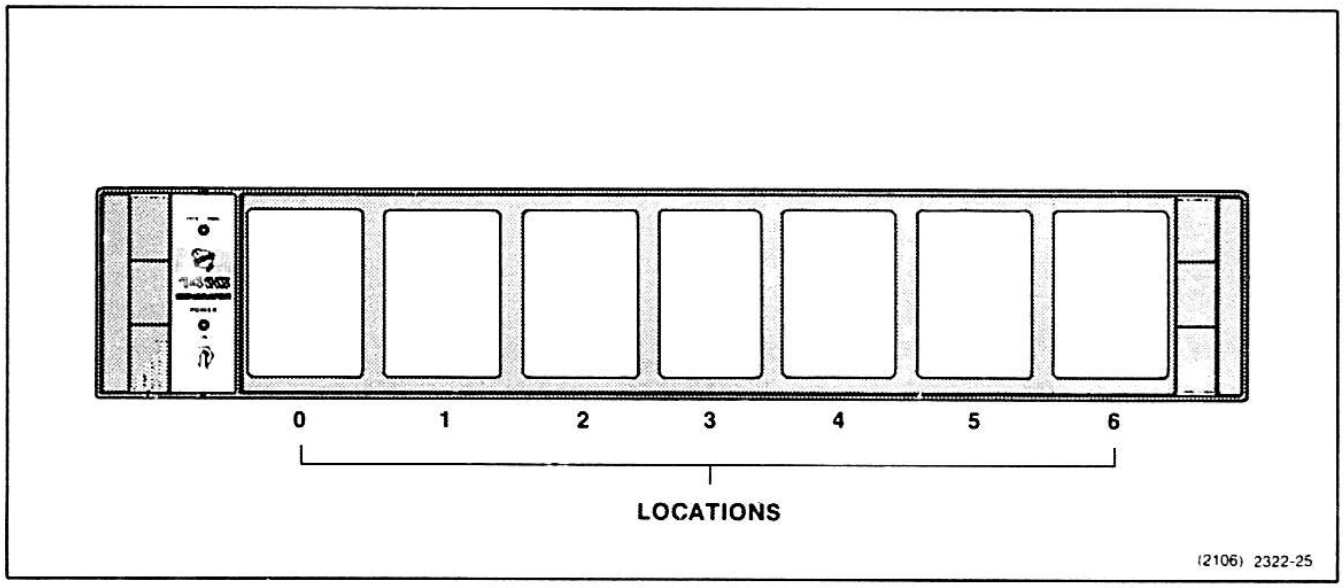

Fig. 4-2. 1411 Module locations.

Sync Generator Outputs

SPGs are available that provide rear panel synchronizing signals. All of the SPGs supply the sync and timing signals required by the test signal modules. Single-width SPGs may not have rear panel outputs.

The 1411 rear panel has the following signal connectors for SPG outputs. However, all outputs may not be present with a particular SPG. Check the SPG Instruction Manual as to which outputs are provided. The outputs are: COMP SYNC, PAL PULSE, COMP BLANKING, FIELD REF, HORIZONTAL (line) DRIVE, BURST FLAG, VERTICAL (field) DRIVE, V/2 (25 Hz), V/4 (12.5 Hz), 64H (1 MHz), and two identical SUBCARRIER OUT jacks.

Table 4-2

SPG12 REMOTE

J41 Pin Number	Used For	Condition Required
25	SUBCARRIER ABSENT	requires LED & gnd.
26	INTERNAL mode indicator	required LED & gnd.
27	SYNC ABSENT	required LED & gnd.
28	PAL PULSE ABSENT	requires LED & gnd.
29	Mode Switching *	high-internal, gnd-external
30	Reference Selection	gnd-external, high-internal
31	Reference Selection	gnd-gen lock, high-internal

***If only pin 29 is high, operation is the same as the front-panel switch. When pin 29 is grounded, front-panel switching is disabled.**

Microfiche scan by vintageTEK - Your donations help support the museum - vintagetek.org

Test Modules. Each test module location has three REMOTE connector pins assigned to it. These pins are permanently connected to test module plug pins 55, 56, and 57 at each location. For specific TEST SIGNAL GENERATOR remote operation, consult that particular Instruction Manual. Table 4-3 is a list of remote connector (J41) pins, their assignment to locations, and interface plugs and pins.

Table 4-3

TEST MODULE REMOTE CONNECTIONS

J41 Pins	Location	Interface Plugs	Pin
1	Module 6	P70-P71-P72	55
2	Module 6	P70-P71-P72	56
3	Module 6	P70-P71-P72	57
4	Module 5	P67-P68-P69	55
5	Module 5	P67-P68-P69	56
6	Module 5	P67-P68-P69	57
7	Module 4	P64-P65-P66	55
8	Module 4	P64-P65-P66	56
9	Module 4	P64-P65-P66	57
10	Module 3	P61-P62-P63	55
11	Module 3	P61-P62-P63	56
12	Module 3	P61-P62-P63	57
13	Module 2	P58-P59-P60	55
14	Module 2	P58-P59-P60	56
15	Module 2	P58-P59-P60	57
16	Module 1	P55-P56-P57	55
17	Module 1	P55-P56-P57	56
18	Module 1	P55-P56-P57	57

Remote ITS Keying

Test module pin 19 is dedicated to the ITS Key signal. When the ITS Key line goes low, the Test Signal Generator will provide one or more lines of composite video. Remote connector pin 24 is the Remote ITS Key for test module location 1. Table 4-4 gives the REMOTE connector pin and test module location it controls.

NOTE

The male plug for the REMOTE connector is Tektronix Part Number 131-0293-00.

Table 4-4

REMOTE ITS KEY LINES

J41 Pin	Test Module Location
24	1
23	2
22	3
21	4
20	5
19	6

Internal ITS Keying

Interface lines 14 through 19 are used to key the ITS signals. Because only position 19, in a particular test module location, will key the signal, lines alter position with each module. Fig. 4-3 shows how the line positions are altered.

Internal ITS Keying is provided by some modules. If internal ITS Keying is used, Remote Keying should not be used for that module.

Microfiche scan by vintageTEK - Your donations help support the museum - vintagetek.org

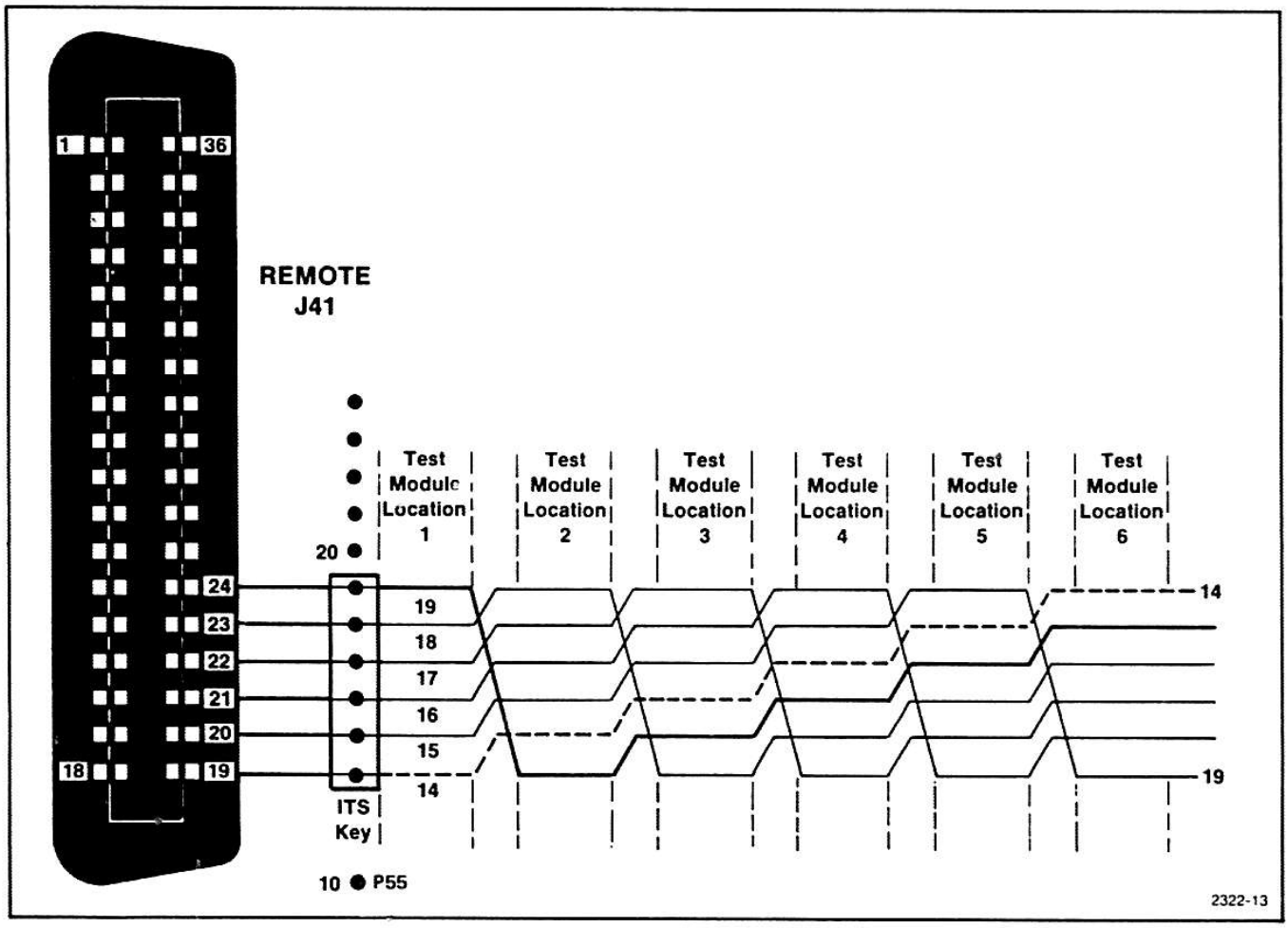

Fig. 4-3. ITS Key lines, showing how interface lines rotate to plug position 19.

Microfiche scan by vintageTEK - Your donations help support the museum - vintagetek.org

RECALIBRATION PROCEDURE

This procedure can be used to either verify that the instrument is performing to specification, or to recalibrate it.

In the procedure, steps or parts of steps that relate to performance check are identified by the word "Check" in the step heading. Steps pertaining to both performance check and calibration are headed "Check/Adjust".

Front- and rear-panel control and connector names on the 1411 are capitalized, for example: POWER. Control and connector names on test equipment and installed 1411 modules and 1411 internal controls start with capital letters, for example: Time/Div, SPG12 Subcarrier output or 1411 Subcarrier Frequency control.

See the illustrations in Section 9, Servicing Illustrations, for adjustment locations.

TEST EQUIPMENT

The test equipment listed here was used in preparing this procedure. Measurement capabilities described are the minimum required to recalibrate the instrument. Each piece of test equipment is assumed to be operating within its stated specification. If other equipment is used, it must meet or exceed these requirements.

1. Test Oscilloscope

Dual Time Base. Range from 50 ns/div to 5 s/div with provision for a delaying sweep and television triggering.

Dual Trace Amplifier. Bandwidth, dc to 30 MHz; minimum deflection factor, 5 mV/div.

For example, A TEKTRONIX 7603 with 7B53A Dual Time Base, and 7A18 Dual Trace Amplifier.

2. PAL Video Signal Source

Capable of generating 2 volts peak-to-peak of subcarrier and 4 volts composite sync signal. For example, another TEKTRONIX 1411 system or a TEKTRONIX 145.

3. Frequency Counter

Capable of resolving 1/4 Hz out of 3 MHz. For example, a Hewlett-Packard 5326A Option 011.

4. Digital Voltmeter

Accuracy to ±0.1%; range 0 to 15 volts dc. For example, a TEKTRONIX DM 501 installed in a TEKTRONIX TM 501.

5. P6028 1X Probe

Tektronix Part Number 010-0075-00.

6. 75 Ohm Cable (1)

42 inches long. Tektronix Part Number 012-0074-00

7. 75 Ohm Feed-Through Termination (1)

Tektronix Part Number 011-0103-02.

PROCEDURE

1. Check OVEN TEMP LED Operation

a. Turn the 1411 POWER ON.

b. CHECK—that the OVEN TEMP indicator lights within 6 minutes.

2. Check/Adjust −15 V (R194)

a. Connect the digital voltmeter between ground and TP162.

b. CHECK—that the voltage at TP162 is between −14.975 V and −15.025 V.

c. ADJUST—R194 for −15 V ±25 mV.

Microfiche scan by vintageTEK - Your donations help support the museum - vintagetek.org

3. Check Power Supply Accuracy and Ripple

a. Connect the digital voltmeter between ground and each of the Test Points listed in Table 5-1.

b. CHECK—power supply accuracy, according to Table 5-1.

Table 5-1

Test Point	Supply	Accuracy	Ripple
TP162	−15 V	±25 mV	3 mV or less
TP187	+5 V Analog	±50 mV	3 mV or less
TP238	+5 V Digital	±50 mV	3 mV or less
TP225	+15 V	±50 mV	3 mV or less

c. Connect the 1X Probe from the test oscilloscope to each of the Test Points listed in Table 5-1.

d. CHECK—ripple, following Table 5-1.

4. Check/Adjust Subcarrier Amplitude (C496)

a. Connect the SPG front-panel Subcarrier output through 75-ohm cable and a 75-ohm termination to the test oscilloscope vertical input.

b. CHECK—that the subcarrier amplitude is 1.8 to 2.2 volts peak-to-peak.

c. ADJUST—C496 (Subcarrier Amplitude) for 2.0 volts peak-to-peak, or maximum amplitude above 1.8 V.

d. CHECK—that the subcarrier signal zero crossing point is at 0 volt dc ±0.2 volt.

NOTE

Steps 5 and 6 apply to 1411s that do not have a Subcarrier Lock board installed.

5. Check/Adjust C1024 (Subcarrier Range) Centering

a. Move the subcarrier signal connection from the test oscilloscope to the frequency counter.

b. Remove the jumper from P484.

c. Connect P484 pin 3 to ground, and check the frequency.

d. Connect P484 pin 3 to −15 volts, and check the frequency.

e. CHECK—that the frequency is approximately equal on both sides of subcarrier frequency, and at least + and − 20 Hz from subcarrier frequency.

f. ADJUST—C1024 (Subcarrier Range) so that the frequency range is approximately equal on both sides of 4.43361875 MHz.

NOTE

Subcarrier frequency should be checked after a two-hour warm-up and at 14-day intervals to ensure specified accuracy.

6. Check/Adjust Subcarrier Frequency (R494)

a. Place P484 jumper on P484 pins 2 and 3.

b. CHECK—that the frequency is within 1 Hz of 4.43361875 MHz.

c. ADJUST—R494 (Subcarrier Frequency) for 4.43361875 MHz.

Microfiche scan by vintageTEK - Your donations help support the museum - vintagetek.org

THEORY OF OPERATION

This section is divided into two parts. First is a basic overview of the instrument's operation that describes circuit relationships and signal flow as illustrated by the Block Diagram. Second is a more detailed discussion of each of the circuit diagrams.

The circuit diagrams are blocked off according to circuit function. The circuit block titles are used as subheadings in the circuit diagram discussion.

The Block Diagram and circuit diagrams are located on fold-out pages at the rear of the manual. Refer to the appropriate diagram when reading this discussion.

BLOCK DIAGRAM DESCRIPTION

The Internal/External Subcarrier switch selects a subcarrier signal from either the internal Subcarrier Oscillator or from an external source. The subcarrier signal is routed to the Output Amplifier for distribution through the Interface board or through an SPG or front-panel Subcarrier connector, if present.

The Subcarrier Oscillator generates the internal subcarrier signal. The internal subcarrier is accurate to within 1 Hz.

The Oven Temperature Detector provides drive to the front-panel OVEN NORMAL indicator. If the oven temperature is either above or below normal, the OVEN NORMAL indicator will not light.

CIRCUIT DESCRIPTION

Diagram 1

Rear Interconnect

Rear Interconnect board, A5, provides for signal inputs and outputs to the 1411 Generator system. All signal inputs to the Sync Pulse Generators are through 15 kilohm resistors and circuit board inductances to determine the amount of return loss. All outputs from the Sync Pulse Generators and test signal modules have a source impedance of 75 ohms.

Diagram 2

Power Supply

The 1411 power supply includes four operational amplifiers, whose input and feedback resistances are incorporated in a single precision-resistor network, R208. Fig. 6-1 is a simplified schematic diagram of the power supply.

The −15 V, +15 V, and both +5 V supplies use similar regulator circuitry. The −15 V supply is the reference for the other supplies and is adjustable, which enables power-supply voltages to be the correct values. An integrated-circuit regulator derives −10 V from the −15 V and +5 V digital supplies.

Each of the −15 V, +15 V, and the two +5 V supply circuits consists of an operational amplifier driving a current-gain amplifier. Short-circuit protection, in each supply, prevents damage to components in case of excessive current demand.

The −15 V regulator, being similar to the other supplies, will be used as an example for the regulator circuit description.

−15 Volt Supply

U202 is a temperature-compensated voltage reference with a nominal value of −6.95 V. This provides the voltage reference for the −15 V supply. VR203 ensures proper start-up of the −15 V supply at turn-on.

The gain of the −15 V regulator is dependent on precision resistors R208F, G, K, and L. R208's construction ensures accurate temperature tracking. U196 drives the current-gain stage, consisting of Q165, Q162, and Q152 to provide the output voltage.

Q185 is the current limit, shutting down the supply if excessive current is demanded.

C195 and C152 provide high-frequency compensation to determine the transient response of the power supply.

Microfiche scan by vintageTEK - Your donations help support the museum - vintagetek.org

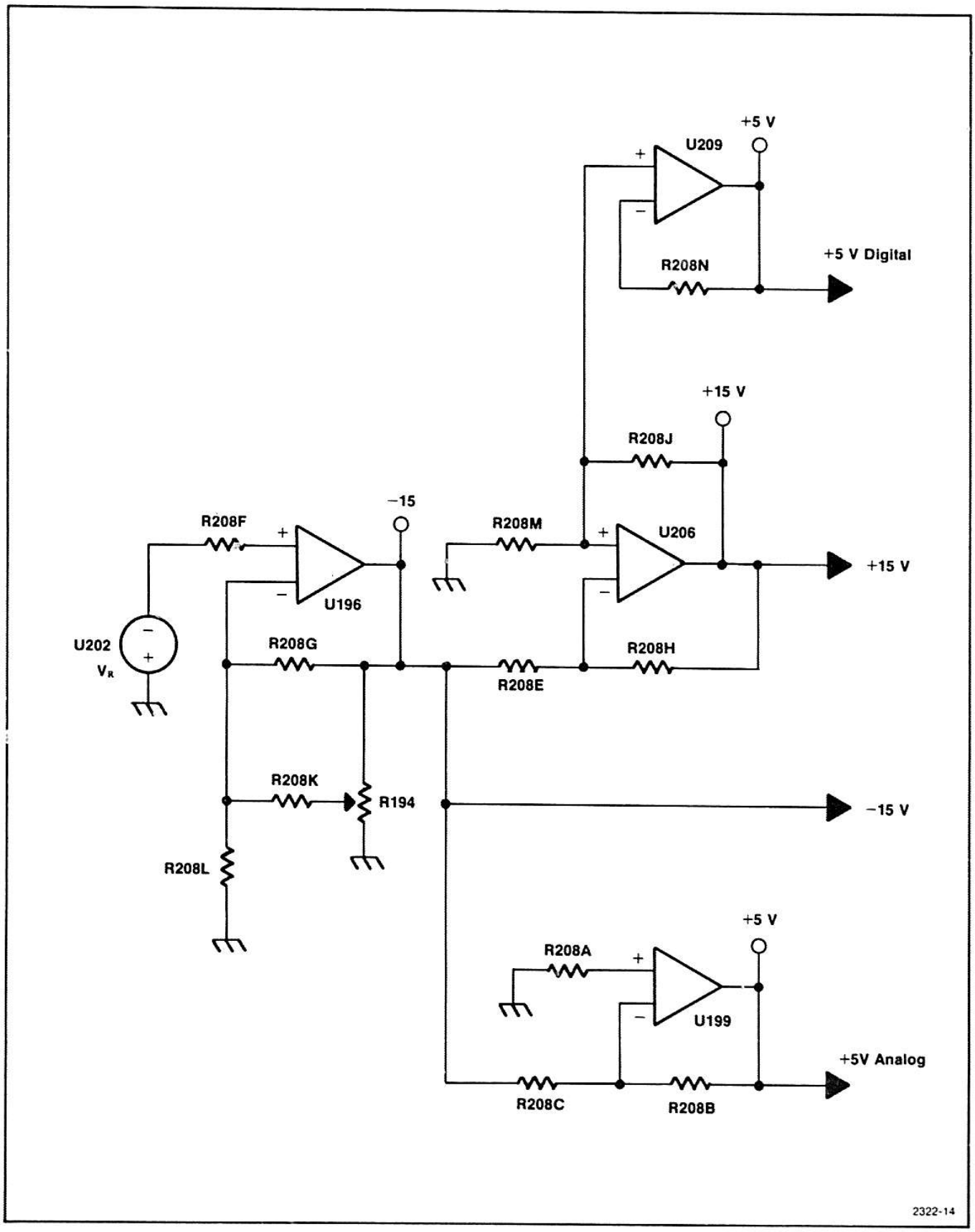

Fig. 6-1. Simplified schematic of the 1411 power supply regulators.

Microfiche scan by vintageTEK - Your donations help support the museum - vintagetek.org

−10 Volt Supply

In addition to the −15 V, +15 V, and two +5 V supplies, the 1411 includes a chassis-mounted IC regulator. When an SPG module requires −10 V, a cable connects the IC regulator to the 1411 Interface circuit board. The IC regulator provides −10 V from the −15 V supply, using +5 V digital as a reference. See Fig. 6-1.

+15 Volt Unregulated Supply

Unregulated +15 V supply current from the Rectifier board is used by the 1411 oven assembly. F223, on the Power Supply board, provides protection. Current is supplied to the oven through the Interface board and Subcarrier Input board.

Power Input

Rear-panel power input J42 is mounted on a line filter-voltage change assembly. The small circuit board can be moved to various positions within the assembly to select different power input levels.

Diagram 3

Subcarrier Input and Oscillator

Circuits on diagram 3 route the CW Subcarrier signal (either from the internal Subcarrier Oscillator, or from an external subcarrier source) to the Interface board for distribution.

External Subcarrier Input and Detector

Q488 and Q478 are an inverting operational amplifier with a gain of 0.5. The collector of Q478 drives the External Subcarrier Detector (through R459), and the Int-Ext Subcarrier switch (through C477).

Q468, Q449, and Q448 form the External Subcarrier Detector. Q449 is a peak detector, biased to detect the positive peaks of CW subcarrier at its base. If subcarrier is of sufficient amplitude, Q499 conducts, driving a collector load (R418, C428, and R428). The charge on C428 keeps Q448 turned on in the event of momentary loss of subcarrier.

R439 and L439 are a hysteresis network, ensuring that Q449 does not conduct if the external subcarrier amplitude falls below a level of 1 V. CR418 protects the base-to-emitter junction of Q448 when subcarrier is not present. The collector of Q448 is high in the presence of external subcarrier, and low in its absence. This output is routed through interface line 59 to the Generator Logic board, A22-1, in SPG11 or SPG12, if present.

Int-Ext Subcarrier Switching

Q467 and Q466 are the external subcarrier limiter. Q464 and Q476 limit internal subcarrier. Q447 and Q457 in the external circuit, and Q466 in the internal circuit, determine which limiter is used.

The control signal is at the junction of R416 and R426, if the Sync Pulse Generator is set to the External mode. This control signal is low, turning on Q447 and Q446. With Q447 on, Q457 is off and Q467 and Q466 route external subcarrier to the filters and Subcarrier Output Amplifier. The conduction of Q446 sets the common emitters of Q464 and Q476 at +5 V, turning off the internal amplifier.

When the Sync Pulse Generator is in Internal, the control signal is high, Q447 and Q446 are off, Q457 is on, inhibiting Q467-Q466 and enabling Q464-Q476. The outputs of the two amplifiers drive the Subcarrier Output Amplifier.

Subcarrier Oscillator

Fine tuning of the Colpitts oscillator, Q1027, is done by varicap CR1022. R494 sets the bias on CR1022, unless P484 is in the 2-3 position.

During gen-lock operation, with a Subcarrier Lock board, frequency and phase of the oscillator signal are compared to incoming burst in the SPG. An error signal is fed back to control the oscillator. R494 is disconnected by P484 in this mode.

The Subcarrier Oscillator's output is routed to the Subcarrier Output Amplifier in gen-lock or internal reference modes.

Oven Temperature Control

Q3012 is used as the heater for the proportional control oven. Thermistor RT3101 controls transistor level of conduction.

At a temperature of 25° C, RT3101 has a value of 100 kilohms, setting the base bias for Q3130 at a point that allows a high rate of conduction. Q3130 then turns Q3012 on hard, rapidly increasing the temperature in the oven.

As oven temperature increases, the resistance of RT3101 decreases and the base bias of Q3130 rises until, at operating temperature, the two transistors cease conduction. A decrease in oven temperature results in increased resistance of RT3101 and increased conduction of Q3012 and Q3130. In this manner, oven temperature is maintained.

Microfiche scan by vintageTEK - Your donations help support the museum - vintagetek.org

Oven Temperature Indicator

U430, Q422, and Q432 sense the temperature state of the oven and turn on the front-panel indicator LED when the temperature is at the operating point. Should the oven temperature increase beyond normal operating range, the front-panel indicator turns off.

When the oven is cold, the base of Q422 is below ground and Q432 is not conducting. As oven temperature increases, the voltage level at U430, pin 3 rises, causing pin 6 to rise. When the base of Q422 reaches about ground, Q432 turns on and saturates, effectively grounding the collector and providing a current source for the front-panel OVEN NORMAL indicator.

If the oven temperature rises beyond normal, Q422 turns on, turning Q432 off and removing the current source for the front-panel LED.

Subcarrier Output

Q456, Q455, and Q425 is an inverting operational amplifier, with a gain of one, driven by subcarrier from a parallel-resonant circuit. Subcarrier is from the External-Internal Subcarrier Switching circuit.

The amplitude of the subcarrier at the input to the amplifier is adjustable by C496. The amplifier output is routed to the Sync Pulse Generator module.

Microfiche scan by vintageTEK - Your donations help support the museum - vintagetek.org

MAINTENANCE

This section is divided into three parts: Preventive Maintenance, Troubleshooting, and Repair.

Preventive Maintenance includes inspection, cleaning, and recalibration. Troubleshooting contains information for isolating a problem. Repair outlines procedures for removing and replacing components.

PREVENTIVE MAINTENANCE

A regular schedule of preventive maintenance improves instrument reliability. The interval should be determined by the severity of the operating environment.

Cleaning

WARNING

Turn off the instrument power and remove the power cord before cleaning.

Dust accumulating on the circuit boards acts as an insulating blanket, preventing efficient heat dissipation, causing overheating and possible component breakdown. A layer of dust can also provide an electrical conduction path, especially under high humidity conditions.

CAUTION

Avoid the use of chemical agents that might damage the plastics used in this instrument. Avoid chemicals that contain benzene, freon, toluene, xylene, or similar solvents.

The best way to remove heavy accumulation of dust is to blow it off with dry, low-velocity air. Remaining dust can be removed with a small brush followed by a soft cloth dampened in a mild detergent and water solution.

Visual Inspection

Visually inspect the circuit boards during the preventive maintenance routine. Make sure that the boards are properly seated in the mainframe and components are properly seated on the etched circuit boards. Boards with shields should be parallel to each other and held firmly by the plastic retainer bars provided for this purpose.

The corrective procedure for most visible defects is obvious; however, care must be taken to determine and correct the cause of heat-damaged components. Heat damage is sometimes an indication of trouble elsewhere in the instrument.

Periodic transistor and integrated-circuit checks are not recommended. The best performance check for these devices is actual operation of the instrument. Performance of the circuit is thoroughly checked during a performance check or recalibration. Substandard transistors or integrated circuits are usually detected at that time.

Recalibration

The length of time between recalibration depends on the amount of use the instrument receives, the nature of the environment, or changes in performance when components are replaced.

In general, a partial recalibration is necessary if components are replaced that affect calibration. Complete recalibration is recommended if the board or boards are not operating to their full capability. To ensure correct and accurate operation, performance should be checked at regular intervals; for example, after 1,000 hours of operation if used continuously, or every six months if used infrequently.

A Performance Check/Calibration Procedure is given in Section 5.

TROUBLESHOOTING

Diagrams

Circuit diagrams are shown on the foldout pages in Section 10. The circuit number and electrical value of each component are shown on the diagrams, along with important waveforms.

Circuit Boards

The circuit boards are outlined on the schematic diagrams, and circuit board illustrations are provided on the back of preceding foldout pages. Assembly numbers are assigned to each circuit board as a method of identifying an individual circuit board.

Microfiche scan by vintageTEK - Your donations help support the museum - vintagetek.org

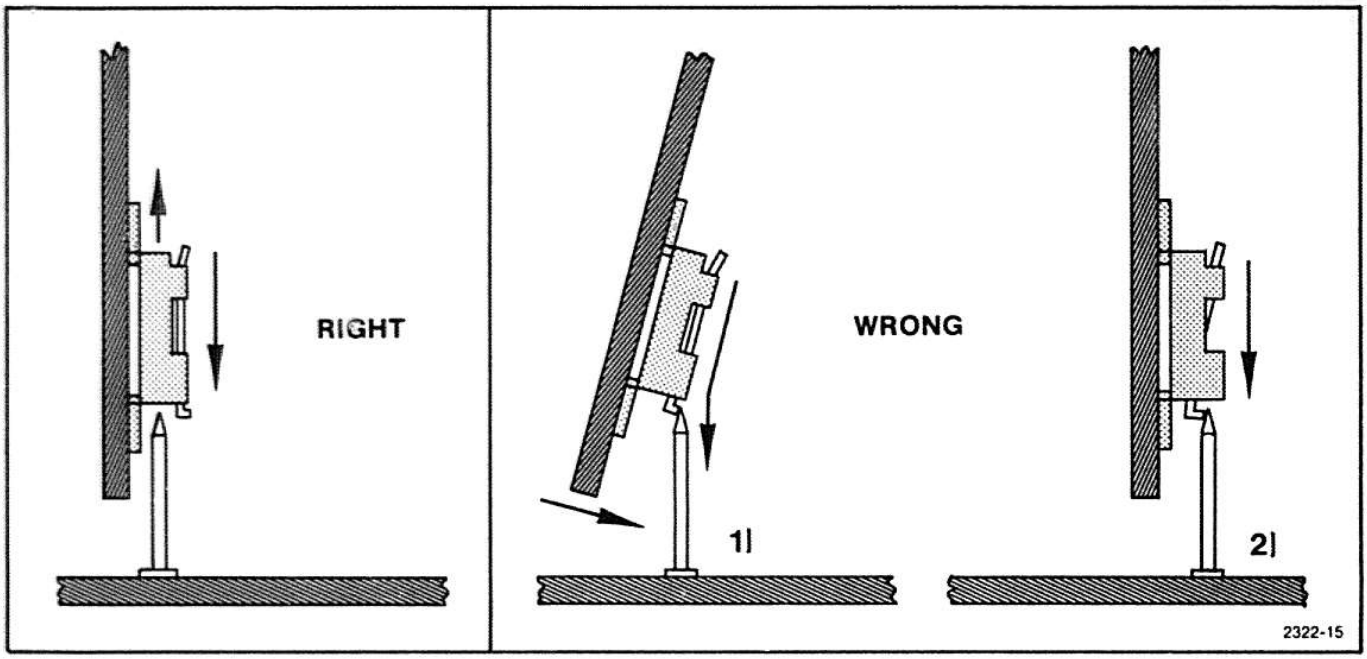

Fig. 7-1. Aligning connectors and pins.

When troubleshooting circuit boards in the instrument, the use of an extender board facilitates access to the board connections and components. Removing the suspected circuit board to the extender board will save time in looking for faults.

Circuit numbers are assigned on a grid system to facilitate component location. Low numbers start at the lower-front corner of the board increasing to the rear and top.

Circuit Board Extender

CAUTION

Do not force circuit boards onto the Circuit Board Extender or Interface board. Pins must fully align or pin connectors may be destroyed. Fig. 7-1 shows correct pin alignment.

Microfiche scan by vintageTEK - Your donations help support the museum - vintagetek.org

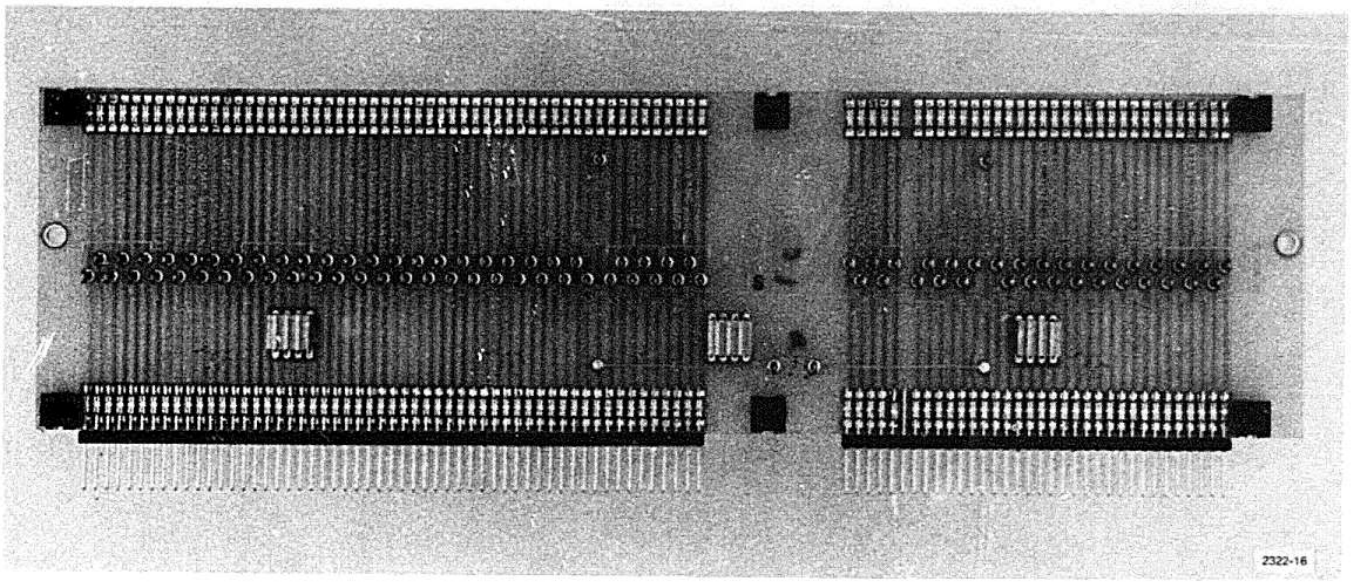

Fig. 7-2. Circuit Board Extender, ready for use.

The 1411 is provided with a reversible Circuit Board Extender. It consists of two sets of pin connectors, mounted on an etched-circuit board that contains test points, and a set of movable mating pins. See Fig. 7-2. The orientation of the mating pins determines whether the Circuit Board Extender will accept right- or left-facing circuit boards. Fig. 7-3 shows an SPG circuit board out on the Extender.

Note from Fig. 7-2 that each interconnecting line is equipped with a test point, and that special ground test points are also brought out.

Fig. 7-4 shows the Circuit Board Extender with the mating pins stowed for board storage.

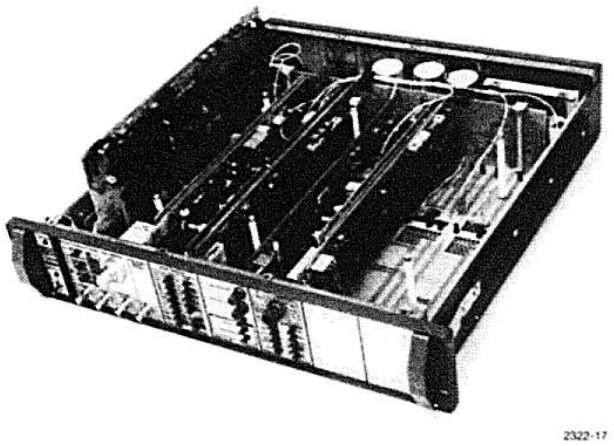

Fig. 7-3. Circuit Board on the Circuit Board Extender.

Microfiche scan by vintageTEK - Your donations help support the museum - vintagetek.org

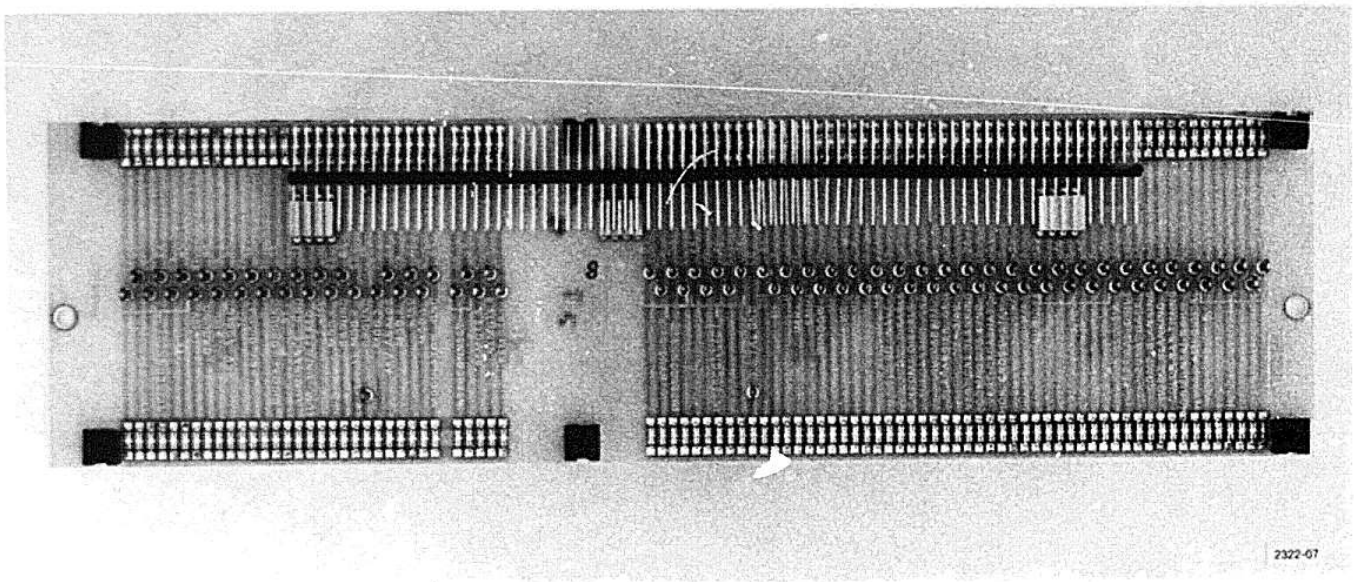

Fig. 7-4. Circuit Board Extender, ready for re-stowage.

Multi-Pin Connectors

Board output signals are fed to the rear-panel connectors through coaxial cable and multi-pin connectors. The connector holder has identification numbers that identify terminal connectors No. 2 and up. A triangular key symbol is also located on the circuit board to identify pin No. 1 (see Fig. 7-5) so that the connector can be properly oriented.

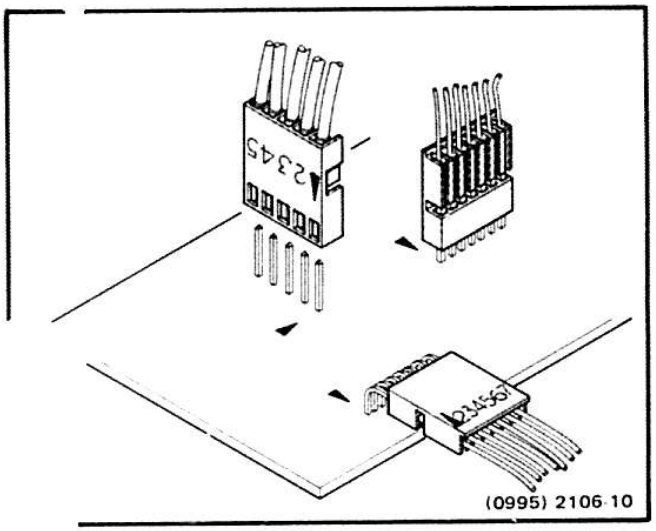

Fig. 7-5. Multi-pin connector holders.

Resistor Colour Code

Colour stripes on resistors signify electrical values a code (see Fig. 7-6). Resistors not colour-coded usu have the value imprinted on the body.

Microfiche scan by vintageTEK - Your donations help support the museum - vintagetek.org

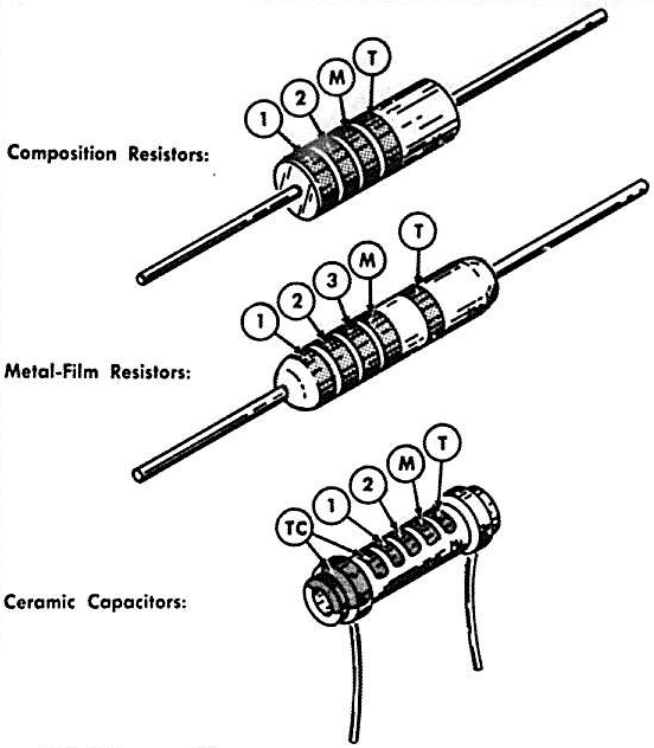

(1) (2) and (3) —1st, 2nd and 3rd significant figures;
(M) —multiplier; (T) —tolerance;
(TC) —temperature coefficient.

Resistor and Capacitor Color Code

Color	Significant Figures	Multiplier		Tolerance	
		Resistors	Capacitors	Resistors	Capacitors
Silver	---	10^{-2}	---	±10%	---
Gold	---	10^{-1}	---	±5%	---
Black	0	1	1	---	±20% or 2 pF*
Brown	1	10	10	±1%	±1% or 0.1 pF*
Red	2	10^2	10^2	±2%	±2%
Orange	3	10^3	10^3	±3%	±3%
Yellow	4	10^4	10^4	±4%	+100% −0%
Green	5	10^5	10^5	±0.5%	±5% or 0.5 pF*
Blue	6	10^6	10^6	---	---
Violet	7	---	---	---	---
Gray	8	---	10^{-2}	---	+80% −20% or 0.25 pF*
White	9	---	10^{-1}	---	±10% or 1 pF*
(none)	---	---	---	±20%	±10% or 1 pF*

*For capacitance of 10 pF or less.

NOTE: (T) and/or (TC) color code for capacitors depends upon manufacturer and capacitor type. May not be present in some cases.

Fig. 7-6. Standard EIA Colour coding for resistors and capacitors.

Capacitor Markings

The capacitance value of common disc capacitors or small electrolytics is marked in microfarads on the component. White ceramic capacitors are colour coded in picofarads using modified EIA code (see Fig. 7-6). The "tear drop" capacitors are colour-coded in microfarads also using a modified EIA code; the dot indicates both temperature and positive (+) side (see Fig. 7-7).

Transistor and Integrated Circuit Basing

Fig. 7-8 shows the lead configurations for socket-mounted transistors and integrated circuits (ICs).

Microfiche scan by vintageTEK - Your donations help support the museum - vintagetek.org

Rated Voltage VDC 25°C	Color	CODE FOR CAPACITANCE IN PICOFARADS		
		1st Figure	2nd Figure	Multiplier–pF
4	Black	0	0	None
6	Brown	1	1	X 10
10	Red	2	2	X 10^2
15	Orange	3	3	X 10^3
20	Yellow	4	4	X 10^4
25	Green	5	5	X 10^5
35	Blue	6	6	X 10^6
50	Violet	7	7	X 10^7
	Gray	8	8	
3	White	9	9	

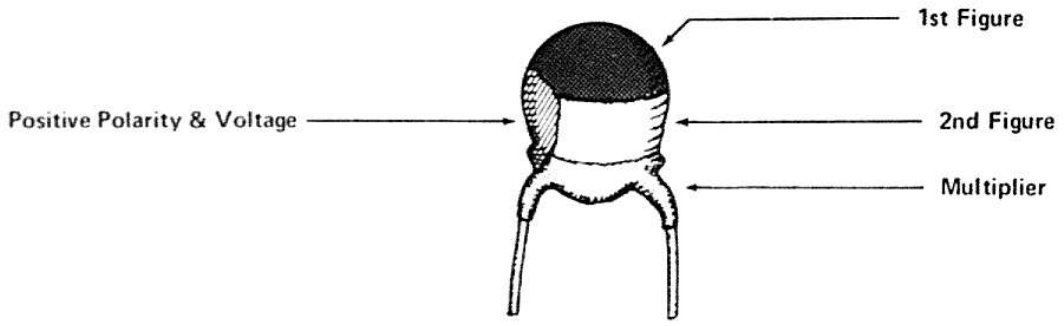

Fig. 7-7. Colour coding for "tear drop" capacitors.

Microfiche scan by vintageTEK - Your donations help support the museum - vintagetek.org

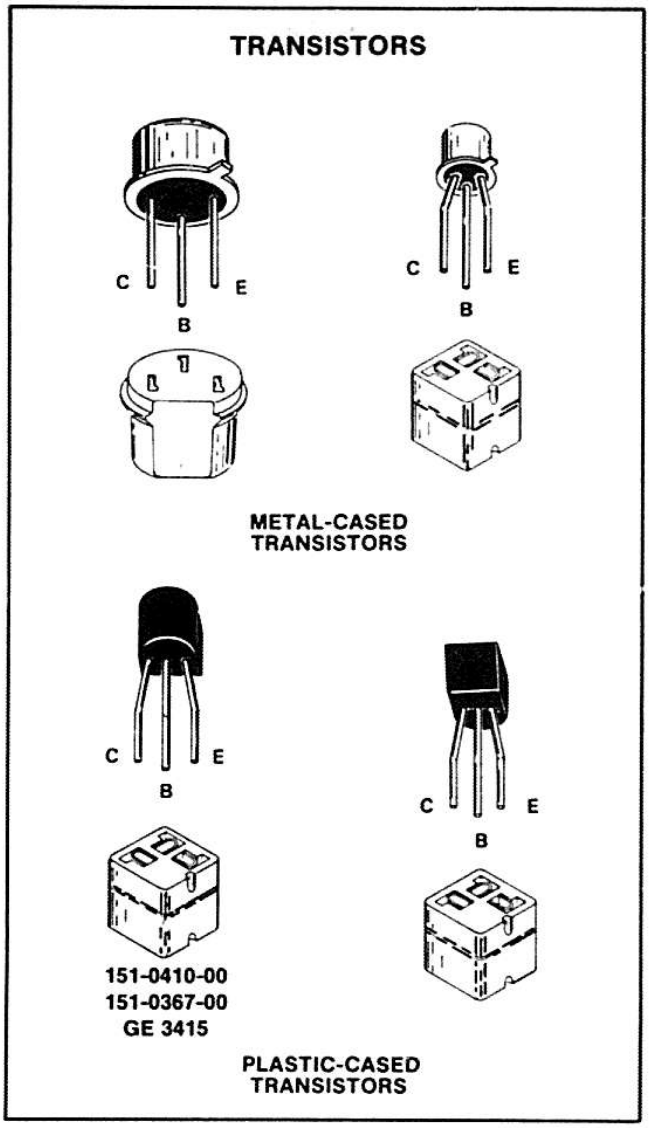

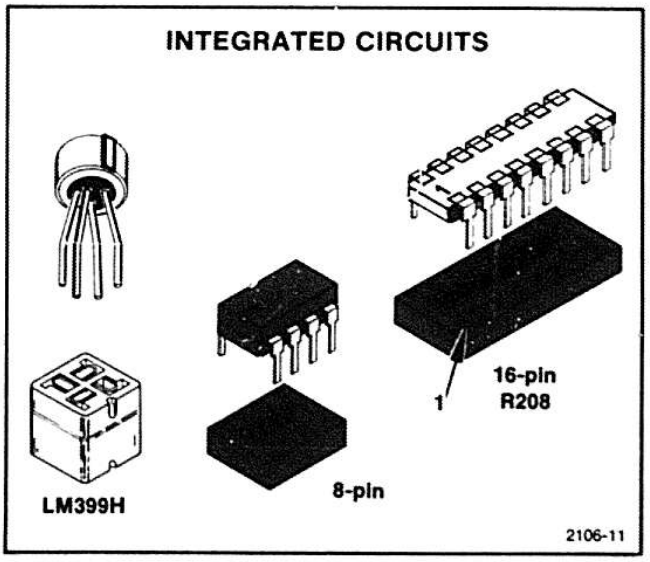

Fig. 7-8. Transistor and Integrated Circuit basing.

Troubleshooting Hints

Before going into a full scale circuit-by-circuit investigation, check control settings. Incorrect control settings or wrong internal jumper positions can indicate a trouble that does not exist. If there is any question about the correct function of any control or jumper, refer to Operating Instructions or Installation. For example, check SPG before looking for a problem in a test signal module.

Before troubleshooting a circuit board, check that the correct input signals and power supplies are present. Make sure that other boards on the Interface board are not defective.

Symptoms will often identify the circuit in which the trouble is located. Incorrect operation of all circuits usually means trouble in the power supply. Consider this possiblity if voltages are incorrect. Make sure that all board pin connectors are making good contact before proceeding with trouble isolation.

Checking for correct voltages and waveforms usually pinpoints the stage or component that has failed. Typical waveforms are given to the left of the diagrams, where applicable.

CAUTION

Due to component density on the circuit boards, special care should be exercised when using meter leads and tips. Accidental shorts can cause abnormal voltages or transients that may destroy components.

WARNING

"Ground lugs" are not always at ground potential. Check the diagrams before using such connections as ground for meter or oscilloscope.

CAUTION

Some transistor cases may be elevated from ground potential.

Special Components

a. Transistors. The best check of transistor operation is actual performance under operating conditions. If a transistor is suspected of being defective, it can be checked by substituting a new component or one which has been checked previously. However, be sure that the circuit conditions will not damage the replacement transistor. If substitute transistors are not available, use a dynamic tester (such as the TEKTRONIX Type 577) to check the transistor.

Microfiche scan by vintageTEK - Your donations help support the museum - vintagetek.org

b. Integrated Circuits. Integrated circuits should not be replaced unless they are actually defective. The best method for checking these devices is by direct substitution with a new component or one which is known to be good. Be sure that circuit conditions will not damage the replacement component.

In a few cases, a power supply may oscillate when full current is required. This oscillation occurs when the current-limiting transistor is operating near its limit point. This problem is most likely to occur when additional modules are added to the mainframe. When oscillations occur on a power supply, one of the following remedies should be implemented. First, replace the current-limiting transistor; then if necessary, replace the operational amplifier. If the oscillation is still present, install the oscillation suppression capacitor listed as C196, C199, C207, or C220.

REPAIR

Corrective maintenance consists of component replacement and circuit board repair. Special techniques required to replace components in this instrument are given here.

WARNING

Disconnect the instrument power cord before soldering.

Soldering Techniques

Reliability and performance of this instrument might be compromised if proper soldering techniques are not used when replacing parts. Soldering techniques that apply to maintenance of precision electronic equipment should be used when working on the boards. Use only 60/40 rosin-core, electronic grade solder.

Before installing components and soldering, oxides can be removed from etched-circuit boards by using a pencil eraser.

The choice of soldering iron is determined by the repair to be made. When soldering on circuit boards, use a 15- to 25-watt pencil type soldering iron with a 1/8-inch wide, wedge-shaped tip. Keep the tip properly tinned for best heat transfer to the solder joint. A higher wattage soldering iron may separate the etched wiring from the circuit board. Avoid excessive heat; apply only enough heat to remove the component or to make a good solder joint. Use only enough solder to make a firm solder joint. Use a desoldering tool, when necessary, to remove excess solder.

A pencil-type soldering iron used for circuit boards should be used for soldering to potentiometers, or metal terminals mounted in plastic holders. Ground lugs that are connected to the chassis, or other metal terminals, connected to a large heat-radiating surface, require a higher-wattage soldering iron with a larger tip.

After soldering is completed, clean the area around the solder connection with a flux-remover solvent. Be careful not to remove any information printed in the area.

Parts Location

The exploded-view drawings associated with the Replaceable Mechanical Parts list (at the rear of the manual) are helpful in the removal or disassembly of components or subassemblies. Circuit board illustrations are provided on the backs of foldout pages in the Diagrams section of this manual.

Circuit Board Replacement

If a circuit board is damaged beyond repair, the entire assembly, including all components, can be replaced. Tektronix part numbers are given in the Replaceable Electrical Parts list.

Circuit Board Removal

1. Power Supply Board

a. Disconnect the multi-pin connectors from the board. Note the order of these connectors, so they can be correctly replaced.

b. Disconnect rear-panel coaxial cables from any installed modules. Lay cables back over the rear of the 1411.

c. Remove plastic clips from metal posts.

d. Grasp the board at both ends and pull straight up from the Interface board.

e. To replace the board, reverse the order of removal. Use the mating plastic guides to align the board pin connectors. Be sure that cables beneath the board are in notches.

f. Reinstall plastic clips.

Match the triangle key symbol on the multi-pin connectors to the same symbol on the board. Note that the component side of the board faces the rear of the instrument.

2. Subcarrier Input Board

a. Remove the multi-pin connectors from the board. Note the order of these connectors, so they can be correctly replaced.

b. Remove the four hold down screws, in the board corners.

Microfiche scan by vintageTEK - Your donations help support the museum - vintagetek.org

c. Remove the six screws that mount the rear panel to the chassis and pull the rear panel back about an inch.

d. Lift the board straight up from the instrument. Take care that the interconnection between the interface board and the Subcarrier Input board (P405) is not damaged.

e. To replace the board, reverse the order of removal. Use caution when replacing this board that Interface pins are not bent.

3. Rectifier Board

a. Remove the Power Supply board.

b. Remove the multi-pin connectors from the board. Note the order of these connectors, so they can be correctly replaced. Lay cables back near the power transformer.

c. Remove the four circuit board hold-down screws.

d. Remove the six screws which mount the rear panel to the chassis and pull the panel back about an inch. Lift the Rectifier board out.

e. To replace the board, reverse the order of removal.

4. Rear Interconnect Board

a. Remove the multi-pin connectors from the board. Note the order of these connectors, so they can be correctly replaced.

b. Remove the mounting nuts from all bnc connectors on the 1411 rear panel.

c. Remove the six screws that mount the rear panel to the chassis and pull the panel back about an inch.

d. Remove the eight screws holding the Interconnect board to the rear panel.

e. Pull the board toward the front of the instrument to free the bnc connectors from the rear panel, and lift out.

f. To replace the board, reverse the order of removal.

5. SPG and TSG Circuit Boards

a. Remove the two test module stabilizer bars. Hold-downs are secured by three flat-head screws each.

b. Check to see if the board to be removed has firmly mounted control shaft extenders. If it does, they must be removed before attempting to remove the board.

c. If the board to be removed has front-panel switches, remove front-panel segment.

d. Raise the board just enough to clear the interface pins.

e. Disconnect interconnecting plugs from the board.

f. Slide the board toward the rear of the instrument, while elevating the rear of the board, until the front-panel switch extenders, if any, have cleared.

g. Lift the circuit board upward from the Interface board.

h. Reverse the procedure to replace the circuit board within its module.

Replacement Components

Any replacement component should be of the original type or a direct replacement. Cut and shape the leads to conform with the component being replaced. After a component is replaced, check the operation and calibration of associated circuits.

Interconnecting Pins. A pin replacement kit including necessary tools, instructions, and replacement pins is available from Tektronix, Inc. Order Tektronix Part No. 040-0542-00.

Extracting Integrated Circuits

An extracting tool should be used to remove the 14- and 16-pin integrated circuits to prevent damage to the pins. This tool is available from Tektronix, Inc. Order Tektronix Part No. 003-0619-00. If an extracting tool is not available, use care to avoid damaging the pins. Pull slowly and evenly on both ends of the IC. Try to avoid having one end of the IC disengage from the socket before the other.

Microfiche scan by vintageTEK - Your donations help support the museum - vintagetek.org

Obtaining Replacement Parts

All electrical and mechanical replacement parts for the 1411 can be obtained through the local Tektronix Field Office or representative. However, many of the standard electronic components can be obtained locally in less time than is required to order from Tektronix, Inc. Before purchasing or ordering replacement parts, consult the parts list for value, tolerance, and rating.

When ordering replacement parts from Tektronix, Inc., please include the following information:

1. Instrument type.

2. Instrument serial number.

3. Description of the part, as it appears in the Replaceable Mechanical Parts list.

4. The Tektronix part number.

Microfiche scan by vintageTEK - Your donations help support the museum - vintagetek.org

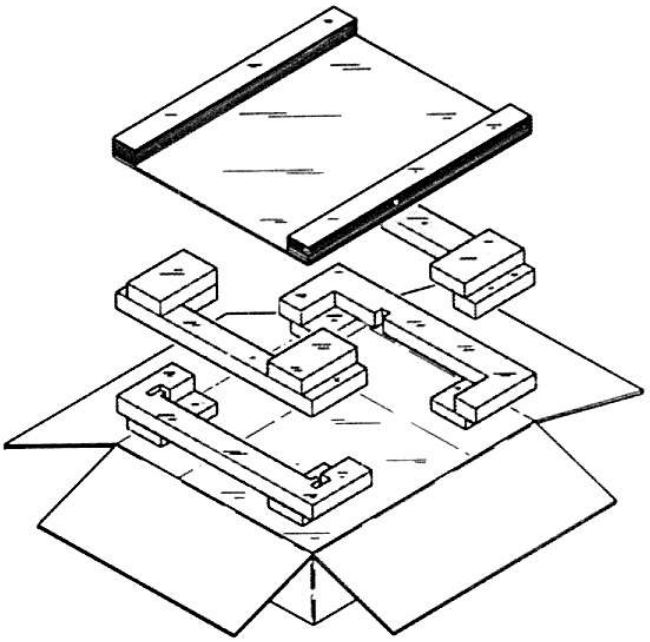

a.

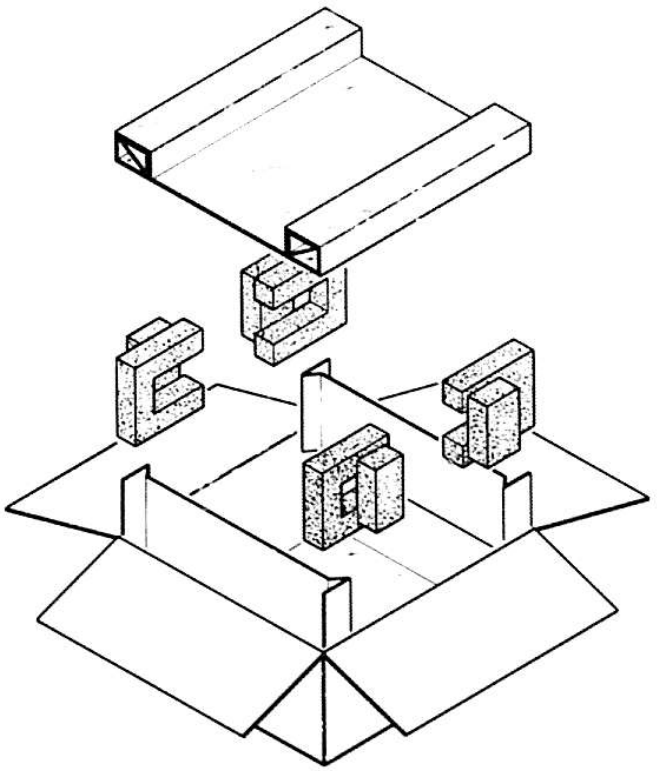

b.

Repackaging for Shipment:

If the Tektronix instrument is to be shipped to a Tektronix Service Center for service or repair, attach a tag showing: owner (with address) and the name of an individual at your firm that can be contacted, complete instrument serial number and a description of the service required.

Save and re-use the package in which your instrument was shipped. If the original packaging is unfit for use or not available, repackage the instrument as follows:

1. **Obtain a carton of corrugated cardboard having inside dimensions of no less than six inches more than the instrument dimensions; this will allow for cushioning. Refer to Table 1 for carton test strength requirements.**
2. **Surround the instrument with polyethylene sheeting to protect the finish of the instrument.**
3. **Cushion the instrument on all sides by tightly packing dunnage or urethane foam between carton and instrument, allowing three inches on all sides.**
4. **Seal carton with shipping tape or industrial stapler.**

Table 1. Shipping Carton Test Strength

Gross Weight (lb.)	Carton Test Strength (lb.)
0—10	200
10—30	275
30—120	375
120—140	500
140—160	600

2106-12

Fig. 7-9. Instrument repackaging a. 1411R b. 1411C.

Microfiche scan by vintageTEK - Your donations help support the museum - vintagetek.org

REPLACEABLE ELECTRICAL PARTS

PARTS ORDERING INFORMATION

Replacement parts are available from or through your local Tektronix, Inc. Field Office or representative

Changes to Tektronix instruments are sometimes made to accommodate improved components as they become available, and to give you the benefit of the latest circuit improvements developed in our engineering department. It is therefore important, when ordering parts, to include the following information in your order: Part number, instrument type or number, serial number, and modification number if applicable.

If a part you have ordered has been replaced with a new or improved part, your local Tektronix, Inc. Field Office or representative will contact you concerning any change in part number

Change information, if any, is located at the rear of this manual

SPECIAL NOTES AND SYMBOLS

X000	Part first added at this serial number
00X	Part removed after this serial number

ITEM NAME

In the Parts List, an Item Name is separated from the description by a colon (:) Because of space limitations, an Item Name may sometimes appear as incomplete. For further Item Name identification, the U.S. Federal Cataloging Handbook H6-1 can be utilized where possible

ABBREVIATIONS

ACTR	ACTUATOR	PLSTC	PLASTIC
ASSY	ASSEMBLY	QTZ	QUARTZ
CAP	CAPACITOR	RECP	RECEPTACLE
CER	CERAMIC	RES	RESISTOR
CKT	CIRCUIT	RF	RADIO FREQUENCY
COMP	COMPOSITION	SEL	SELECTED
CONN	CONNECTOR	SEMICOND	SEMICONDUCTOR
ELCTLT	ELECTROLYTIC	SENS	SENSITIVE
ELEC	ELECTRICAL	VAR	VARIABLE
INCAND	INCANDESCENT	WW	WIREWOUND
LED	LIGHT EMITTING DIODE	XFMR	TRANSFORMER
NONWIR	NON WIREWOUND	XTAL	CRYSTAL

Microfiche scan by vintageTEK - Your donations help support the museum - vintagetek.org

CROSS INDEX—MFR. CODE NUMBER TO MANUFACTURER

Mfr. Code	Manufacturer	Address	City. State. Zip
00853	SANGAMO ELECTRIC CO., S. CAROLINA DIV.	P O BOX 128	PICKENS, SC 29671
01121	ALLEN-BRADLEY COMPANY	1201 2ND STREET SOUTH	MILWAUKEE, WI 53204
01295	TEXAS INSTRUMENTS, INC., SEMICONDUCTOR GROUP	P O BOX 5012, 13500 N CENTRAL EXPRESSWAY	DALLAS, TX 75222
01686	RCL ELECTRONICS, INC.	195 MC GREGOR STREET	MANCHESTER, NH 03102
02735	RCA CORPORATION, SOLID STATE DIVISION	ROUTE 202	SOMERVILLE, NY 08876
02777	HOPKINS ENGINEERING COMPANY	12900 FOOTHILL BLVD.	SAN FERNANDO, CA 91342
03508	GENERAL ELECTRIC COMPANY, SEMI-CONDUCTOR PRODUCTS DEPARTMENT	ELECTRONICS PARK	SYRACUSE, NY 13201
04222	AVX CERAMICS, DIVISION OF AVX CORP.	P O BOX 867, 19TH AVE. SOUTH	MYRTLE BEACH, SC 29577
04713	MOTOROLA, INC., SEMICONDUCTOR PROD. DIV.	5005 E MCDOWELL RD,PO BOX 20923	PHOENIX, AZ 85036
07263	FAIRCHILD SEMICONDUCTOR, A DIV. OF FAIRCHILD CAMERA AND INSTRUMENT CORP.	464 ELLIS STREET	MOUNTAIN VIEW, CA 94042
09353	C AND K COMPONENTS, INC.	103 MORSE STREET	WATERTOWN, MA 02172
14193	CAL-R, INC.	1601 OLYMPIC BLVD.	SANTA MONICA, CA 90404
14433	ITT SEMICONDUCTORS	3301 ELECTRONICS WAY P O BOX 3049	WEST PALM BEACH, FL 33402
14552	MICRO SEMICONDUCTOR CORP.	2830 E FAIRVIEW ST.	SANTA ANA, CA 92704
15801	FENWAL ELECTRONICS, DIV. OF KIDDE WALTER AND CO., INC.	63 FOUNTAIN ST.	FRAMINGHAM, MA 01701
27012	MICRO DEVICES, CORPORATION	1881 SOUTHLAND BLVD.	DAYTON, OHIO 45439
27014	NATIONAL SEMICONDUCTOR CORP.	2900 SEMICONDUCTOR DR.	SANTA CLARA, CA 95051
56289	SPRAGUE ELECTRIC CO.	87 MARSHALL ST.	NORTH ADAMS, MA 01247
59660	TUSONIX INC.	2155 N FORBES BLVD	TUCSON, AZ 85705
71034	BLILEY ELECTRIC CO.	2545 W. GRANDVIEW BLVD.	ERIE, PA 16512
71400	BUSSMAN MFG., DIVISION OF MCGRAW-EDISON CO.	2536 W. UNIVERSITY ST.	ST. LOUIS, MO 63107
72619	DIALIGHT, DIV. AMPEREX ELECTRONIC	203 HARRISON PLACE	BROOKLYN, NY 11237
72982	ERIE TECHNOLOGICAL PRODUCTS, INC.	644 W. 12TH ST.	ERIE, PA 16512
73138	BECKMAN INSTRUMENTS, INC., HELIPOT DIV.	2500 HARBOR BLVD.	FULLERTON, CA 92634
75042	TRW ELECTRONIC COMPONENTS, IRC FIXED RESISTORS, PHILADELPHIA DIVISION	401 N. BROAD ST.	PHILADELPHIA, PA 19108
76493	BELL INDUSTRIES, INC., MILLER, J. W., DIV.	19070 REYES AVE., P O BOX 5825	COMPTON, CA 90224
80009	TEKTRONIX, INC.	P O BOX 500	BEAVERTON, OR 97077
80031	ELECTRA-MIDLAND CORP., MEPCO DIV.	22 COLUMBIA ROAD	MORRISTOWN, NJ 07960
91637	DALE ELECTRONICS, INC.	P. O. BOX 609	COLUMBUS, NE 68601

Microfiche scan by vintageTEK - Your donations help support the museum - vintagetek.org

Ckt No.	Tektronix Part No.	Serial/Model No. Eff	Dscont	Name & Description	Mfr Code	Mfr Part Number
A1	670-4440-01			CKT BOARD ASSY:INTERFACE	80009	670-4440-01
A2	670-4441-00	B010100	B010513	CKT BOARD ASSY:EXTENDER	80009	670-4441-00
A2	670-4441-02	B010514		CKT BOARD ASSY:EXTENDER	80009	670-4441-02
A3	670-4442-00	B010100	B010256	CKT BOARD ASSY:POWER SUPPLY	80009	670-4442-00
A3	670-4442-01	B010257	B011104	CKT BOARD ASSY:POWER SUPPLY	80009	670-4442-01
A3	670-4442-02	B011105		CKT BOARD ASSY:POWER SUPPLY	80009	670-4442-02
A4	670-4443-00			CKT BOARD ASSY:RECTIFIER	80009	670-4443-00
A5	670-4444-00			CKT BOARD ASSY:REAR INTERCONNECT	80009	670-4444-00
A6	119-0813-00			SELECTOR,VOLTS:W/LINE FLTR RCPT & FUSE	02777	F65003
A10	670-4039-01			CKT BOARD ASSY:SUBCARRIER OSCILLATOR	80009	670-4039-01
A11	670-4063-02			CKT BOARD ASSY:TEMP CONTROL	80009	670-4063-02
A13-1	670-4445-02			CKT BOARD ASSY:SUBCARRIER INPUT	80009	670-4445-02
C106	290-0506-00			CAP.,FXD,ELCTLT:9600UF,+100-10%,25V	56289	68D10471
C125	290-0506-00			CAP.,FXD,ELCTLT:9600UF,+100-10%,25V	56289	68D10471
C146	290-0508-00			CAP.,FXD,ELCTLT:18,000UF,+100-10%,15V	56289	68D10444
C152	283-0680-00			CAP.,FXD,MICA D:330PF,1%,500V	00853	D155E331F0
C159	283-0680-00			CAP.,FXD,MICA D:330PF,1%,500V	00853	D155E331F0
C172	290-0745-00			CAP.,FXD,ELCTLT:22UF,+50-10%,25V	56289	502D225
C175	290-0117-00			CAP.,FXD,ELCTLT:50UF,+75-10%,50V	56289	30D506G050DD9
C185	283-0111-00			CAP.,FXD,CER DI:0.1UF,20%,50V	72982	8121-N088Z5U104M
C195	281-0763-00			CAP.,FXD,CER DI:47PF,10%,100V	72982	8035D9AADC1G470K
C196	281-0814-00 ----- -----	XB010257	B010419	CAP.,FXD,CER DI:100PF,10%,100V (NOMINAL VALUE,SELECTED. ADDED WHEN NECESSARY)	04222	GC70-1-A101K
C196	281-0814-00	B010420		CAP.,FXD,CER DI:100PF,10%,100V	04222	GC70-1-A101K
C198	281-0763-00			CAP.,FXD,CER DI:47PF,10%,100V	72982	8035D9AADC1G470K
C199	281-0814-00 ----- -----	XB010257	B010419	CAP.,FXD,CER DI:100PF,10%,100V (NOMINAL VALUE,SELECED. ADDED WHEN NECESSARY)	04222	GC70-1-A101K
C199	281-0814-00	B010420		CAP.,FXD,CER DI:100PF,10%,100V	04222	GC70-1-A101K
C204	283-0111-00			CAP.,FXD,CER DI:0.1UF,20%,50V	72982	8121-N088Z5U104M
C206	281-0763-00			CAP.,FXD,CER DI:47PF,10%,100V	72982	8035D9AADC1G470K
C207	281-0814-00 ----- -----	XB010257	B010419	CAP.,FXD,CER DI:100PF,10%,100V (NOMINAL VALUE,SELECTED. ADDED WHEN NECESSARY)	04222	GC70-1-A101K
C207	281-0814-00	B010420		CAP.,FXD,CER DI:100PF,10%,100V	04222	GC70-1-A101K
C214	283-0111-00			CAP.,FXD,CER DI:0.1UF,20%,50V	72982	8121-N088Z5U104M
C219	281-0763-00			CAP.,FXD,CER DI:47PF,10%,100V	72982	8035D9AADC1G470K
C220	281-0814-00 ----- -----	XB010257	B010419	CAP.,FXD,CER DI:100PF,10%,100V (NOMINAL VALUE,SELECTED. ADDED WHEN NECESSARY)	04222	GC70-1-A101K
C220	281-0814-00	B010420		CAP.,FXD,CER DI:100PF,10%,100V	04222	GC70-1-A101K
C228	290-0117-00			CAP.,FXD,ELCTLT:50UF,+75-10%,50V	56289	30D506G050DD9
C231	290-0745-00			CAP.,FXD,ELCTLT:22UF,+50-10%,25V	56289	502D225
C241	283-0680-00			CAP.,FXD,MICA D:330PF,1%,500V	00853	D155E331F0
C249	283-0680-00			CAP.,FXD,MICA D:330PF,1%,500V	00853	D155E331F0
C415	283-0081-00			CAP.,FXD,CER DI:0.1UF,+80-20%,25V	56289	36C600
C426	290-0745-00			CAP.,FXD,ELCTLT:22UF,+50-10%,25V	56289	502D225
C428	281-0773-00			CAP.,FXD,CER DI:0.01UF,10%,100V	04222	GC70-1C103K
C434	281-0773-00			CAP.,FXD,CER DI:0.01UF,10%,100V	04222	GC70-1C103K
C445	281-0773-00			CAP.,FXD,CER DI:0.01UF,10%,100V	04222	GC70-1C103K
C458	281-0773-00			CAP.,FXD,CER DI:0.01UF,10%,100V	04222	GC70-1C103K
C469	281-0773-00			CAP.,FXD,CER DI:0.01UF,10%,100V	04222	GC70-1C103K
C477	281-0773-00			CAP.,FXD,CER DI:0.01UF,10%,100V	04222	GC70-1C103K
C484	283-0649-00			CAP.,FXD,MICA D:105PF,1%,300V	00853	D153F1050F0
C485	281-0773-00			CAP.,FXD,CER DI:0.01UF,10%,100V	04222	GC70-1C103K
C495	283-0633-00			CAP.,FXD,MICA D:77PF,1%,100V	00853	D151E770F0
C496	281-0205-00			CAP.,VAR,PLSTC:4-65PF,100V	80031	281OC5R565QJ02F0
C498	281-0773-00			CAP.,FXD,CER DI:0.01UF,10%,100V	04222	GC70-1C103K
C1022	283-0663-00 ----- -----			CAP.,FXD,MICA D:16.8PF,+/-0.5PF,500V (NOMINAL VALUE,SELECTED)	00853	D155C16.8D0

Microfiche scan by vintageTEK - Your donations help support the museum - vintagetek.org

Ckt No.	Tektronix Part No.	Serial/Model No. Eff	Dscont	Name & Description	Mfr Code	Mfr Part Number
C1023	283-0643-00			CAP.,FXD,MICA D:22PF,+/-0.5PF,300V	00853	D105C220D
	----- -----			(NOMINAL VALUE,SELECTED)		
C1024	281-0152-00			CAP.,VAR,GL DIE:0.8-10PF,750V	56289	56289GSG-002
C1025	283-0100-00			CAP.,FXD,CER DI:0.0047UF,10%,200V	56289	273C3
C1026	283-0077-00			CAP.,FXD,CER DI:330PF,5%,500V	59660	831-500B331J
C1027	283-0108-00			CAP.,FXD,CER DI:220PF,10%,200V	56289	272C13
C1033	283-0177-00			CAP.,FXD,CER DI:1UF,+80-20%,25V	56289	273C5
CR100	152-0198-00			SEMICOND DEVICE:SILICON,200V,3A	03508	1N5624
CR103	152-0198-00			SEMICOND DEVICE:SILICON,200V,3A	03508	1N5624
CR110	152-0198-00			SEMICOND DEVICE:SILICON,200V,3A	03508	1N5624
CR113	152-0198-00			SEMICOND DEVICE:SILICON,200V,3A	03508	1N5624
CR130	152-0659-00			SEMICOND DEVICE:SILICON,100V,6A	04713	MR751
CR134	152-0659-00			SEMICOND DEVICE:SILICON,100V,6A	04713	MR751
CR140	152-0659-00			SEMICOND DEVICE:SILICON,100V,6A	04713	MR751
CR141	152-0659-00			SEMICOND DEVICE:SILICON,100V,6A	04713	MR751
CR172	152-0066-00			SEMICOND DEVICE:SILICON,400V,750MA	14433	LG4016
CR184	152-0066-00			SEMICOND DEVICE:SILICON,400V,750MA	14433	LG4016
CR202	152-0141-02			SEMICOND DEVICE:SILICON,30V,150MA	01295	1N4152R
CR210	152-0141-02			SEMICOND DEVICE:SILICON,30V,150MA	01295	1N4152R
CR223	152-0066-00			SEMICOND DEVICE:SILICON,400V,750MA	14433	LG4016
CR226	152-0066-00			SEMICOND DEVICE:SILICON,400V,750MA	14433	LG4016
CR411	152-0141-02			SEMICOND DEVICE:SILICON,30V,150MA	01295	1N4152R
CR418	152-0141-02			SEMICOND DEVICE:SILICON,30V,150MA	01295	1N4152R
CR421	152-0141-02			SEMICOND DEVICE:SILICON,30V,150MA	01295	1N4152R
CR1022	152-0269-01			SEMICOND DEVICE:VVC,SI,33PF,5%,35V	80009	152-0269-01
DS210	150-1054-00			LT EMITTING DIO:GREEN,560NM,40MA	72619	558-0201-804
DS422	150-1054-00			LT EMITTING DIO:GREEN,560NM,40MA	72619	558-0201-804
F42	159-0042-00			FUSE,CARTRIDGE:3AG,0.75A,250V,FAST-BLOW	71400	AGC 3/4
F223	159-0042-00			FUSE,CARTRIDGE:3AG,0.75A,250V,FAST-BLOW	71400	AGC 3/4
F1031	159-0125-00			FUSE,THERMAL:150 DEG C OPEN30A MAX,AX LDS	27012	4300A
L439	108-0226-00			COIL,RF:100UH	76493	DWG B4257
L475	108-0443-00			COIL,RF:25UH	80009	108-0443-00
Q152	151-0373-00			TRANSISTOR:SILICON,PNP	80009	151-0373-00
Q155	151-0349-00	B010100	B011439	TRANSISTOR:SILICON,NPN,SEL FROM MJE2801	04713	SJE924
Q155	151-0349-04	B011440		TRANSISTOR:SILICON,NPN,SCREENED	80009	151-0349-04
Q159	151-0465-00			TRANSISTOR:SILICON,PNP	80009	151-0465-00
Q162	151-0466-00			TRANSISTOR:SILICON,NPN	04713	SJE327
Q165	151-0220-00			TRANSISTOR:SILICON,PNP	07263	S036228
Q169	151-0207-00			TRANSISTOR:SILICON,NPN	03508	X32D6191
Q185	151-0220-00			TRANSISTOR:SILICON,PNP	07263	S036228
Q188	151-0207-00			TRANSISTOR:SILICON,NPN	03508	X32D6191
Q215	151-0207-00			TRANSISTOR:SILICON,NPN	03508	X32D6191
Q219	151-0207-00			TRANSISTOR:SILICON,NPN	03508	X32D6191
Q233	151-0465-00			TRANSISTOR:SILICON,PNP	80009	151-0465-00
Q235	151-0207-00			TRANSISTOR:SILICON,NPN	03508	X32D6191
Q243	151-0349-00	B010100	B011439	TRANSISTOR:SILICON,NPN,SEL FROM MJE2801	04713	SJE924
Q243	151-0349-04	B011440		TRANSISTOR:SILICON,NPN,SCREENED	80009	151-0349-04
Q246	151-0349-00	B010100	B011439	TRANSISTOR:SILICON,NPN,SEL FROM MJE2801	04713	SJE924
Q246	151-0349-04	B011440		TRANSISTOR:SILICON,NPN,SCREENED	80009	151-0349-04
Q248	151-0207-00			TRANSISTOR:SILICON,NPN	03508	X32D6191
Q249	151-0465-00			TRANSISTOR:SILICON,PNP	80009	151-0465-00
Q422	151-0207-00			TRANSISTOR:SILICON,NPN	03508	X32D6191
Q425	151-0103-00			TRANSISTOR:SILICON,NPN	80009	151-0103-00
Q432	151-0192-00			TRANSISTOR:SILICON,NPN,SEL FROM MPS6521	04713	SPS8801
Q446	151-0221-00			TRANSISTOR:SILICON,PNP	04713	SPS246

Microfiche scan by vintageTEK - Your donations help support the museum - vintagetek.org

Ckt No.	Tektronix Part No.	Serial/Model No. Eff	Dscont	Name & Description	Mfr Code	Mfr Part Number
Q447	151-0188-00			TRANSISTOR:SILICON,PNP	04713	SPS6868K
Q448	151-0410-00			TRANSISTOR:SILICON,PNP	80009	151-0410-00
Q449	151-0190-00			TRANSISTOR:SILICON,NPN	07263	S032677
Q455	151-0190-00			TRANSISTOR:SILICON,NPN	07263	S032677
Q456	151-0190-00			TRANSISTOR:SILICON,NPN	07263	S032677
Q457	151-0221-00			TRANSISTOR:SILICON,PNP	04713	SPS246
Q464	151-0190-00			TRANSISTOR:SILICON,NPN	07263	S032677
Q466	151-0190-00			TRANSISTOR:SILICON,NPN	07263	S032677
Q467	151-0190-00			TRANSISTOR:SILICON,NPN	07263	S032677
Q468	151-0221-00			TRANSISTOR:SILICON,PNP	04713	SPS246
Q476	151-0190-00			TRANSISTOR:SILICON,NPN	07263	S032677
Q478	151-0190-00			TRANSISTOR:SILICON,NPN	07263	S032677
Q488	151-0367-00			TRANSISTOR:SILICON,NPN,SEL FROM 3571TP	01295	SKA6516
Q1027	151-0325-00			TRANSISTOR:SILICON,PNP,SEL FROM 2N4258	80009	151-0325-00
Q1031	153-0632-00			TRANSISTOR:SILICON,NPN,SEL FOR HFE	04713	SJE1933
Q1035	151-0410-00			TRANSISTOR:SILICON,PNP	80009	151-0410-00
R72	321-0085-00			RES.,FXD,FILM:75 OHM,1%,0.125W	91637	MFF1816G75R00F
R82	315-0153-00			RES.,FXD,CMPSN:15K OHM,5%,0.25W	01121	CB1535
R90	315-0153-00			RES.,FXD,CMPSN:15K OHM,5%,0.25W	01121	CB1535
R95	315-0153-00			RES.,FXD,CMPSN:15K OHM,5%.0.25W	01121	CB1535
R99	315-0153-00			RES.,FXD,CMPSN:15K OHM,5%,0.25W	01121	CB1535
R152	315-0181-00			RES.,FXD,CMPSN:180 OHM,5%,0.25W	01121	CB1815
R153	308-0742-00			RES.,FXD,WW:0.24 OHM,5%,2W	75042	BWH-R2400J
R155	315-0181-00			RES.,FXD,CMPSN:180 OHM,5%,0.25W	01121	CB1815
R159	315-0361-00			RES.,FXD,CMPSN:360 OHM,5%,0.25W	01121	CB3615
R162	315-0361-00			RES.,FXD,CMPSN:360 OHM,5%,0.25W	01121	CB3615
R163	315-0470-00	B010100	B010110	RES.,FXD,CMPSN:47 OHM,5%,0.25W	01121	CB4705
R163	315-0470-03	B010111		RES.,FXD,CMPSN:47 OHM,5%,0.25W	01121	CB4705
R164	321-0129-00			RES.,FXD,FILM:215 OHM,1%,0.125W	91637	MFF1816G215R0F
R165	315-0471-00	B010100	B010256	RES.,FXD,CMPSN:470 OHM,5%,0.25W	01121	CB4715
R165	315-0180-00	B010257		RES.,FXD,CMPSN:18 OHM,5%,0.25W	01121	CB1805
R166	308-0742-00			RES.,FXD,WW:0.24 OHM,5%,2W	75042	BWH-R2400J
R167	315-0470-00	B010100	B010110	RES.,FXD,CMPSN:47 OHM,5%,0.25W	01121	CB4705
R167	315-0470-03	B010111		RES.,FXD,CMPSN:47 OHM,5%,0.25W	01121	CB4705
R168	321-0129-00			RES.,FXD,FILM:215 OHM,1%,0.125W	91637	MFF1816G215R0F
R169	315-0471-00			RES.,FXD,CMPSN:470 OHM,5%,0.25W	01121	CB4715
R181	315-0101-00	B010100	B010256	RES.,FXD,CMPSN:100 OHM,5%,0.25W	01121	CB1015
R181	315-0120-00	B010257		RES.,FXD,CMPSN:12 OHM,5%,0.25W	01121	CB1205
R182	315-0912-00	B010100	B010256	RES.,FXD,CMPSN:9.1K OHM,5%,0.25W	01121	CB9125
R182	321-0285-00	B010257		RES.,FXD,FILM:9.09K OHM,1%,0.125W	91637	MFF1816G90900F
R183	315-0112-00	B010100	B010256	RES.,FXD,CMPSN:1.1K OHM,5%,0.25W	01121	CB1125
R183	321-0197-00	B010257		RES.,FXD,FILM:1.1K OHM,1%,0.125W	91637	MFF1816G11000F
R186	315-0752-00	B010100	B010256	RES.,FXD,CMPSN:7.5K OHM,5%,0.25W	01121	CB7525
R186	321-0277-00	B010257		RES.,FXD,FILM:7.5K OHM,1%,0.125W	91637	MFF1816G75000F
R188	315-0511-00	B010100	B010256	RES.,FXD,CMPSN:510 OHM,5%,0.25W	01121	CB5115
R188	321-0165-00	B010257		RES.,FXD,FILM:511 OHM,1%,0.125W	91637	MFF1816G511R0F
R194	311-1915-00			RES.,VAR,NONWIR:20K OHM,10%,0.50W	73138	72-196-0
R203	315-0103-00			RES.,FXD,CMPSN:10K OHM,5%,0.25W	01121	CB1035
R208	307-1082-00			RES,NTWK,FXD F1:REFERENCE VOLTAGE	80009	307-1082-00
R210	315-0221-00			RES.,FXD,CMPSN:220 OHM,5%,0.25W	01121	CB2215
R214	315-0101-00	B010100	B010256	RES.,FXD,CMPSN:100 OHM,5%,0.25W	01121	CB1015
R214	315-0120-00	B010257		RES.,FXD,CMPSN:12 OHM,5%,0.25W	01121	CB1205
R215	315-0511-00	B010100	B010256	RES.,FXD,CMPSN:510 OHM,5%,0.25W	01121	CB5115
R215	321-0165-00	B010257		RES.,FXD,FILM:511 OHM,1%,0.125W	91637	MFF1816G511R0F
R216	315-0332-00	B010100	B010256	RES.,FXD,CMPSN:3.3K OHM,5%,0.25W	01121	CB3325
R216	321-0243-00	B010257		RES.,FXD,FILM:3.32K OHM,1%,0.125W	91637	MFF1816G33200F
R219	315-0112-00	B010100	B010256	RES.,FXD,CMPSN:1.1K OHM,5%,0.25W	01121	CB1125

Microfiche scan by vintageTEK - Your donations help support the museum - vintagetek.org

Ckt No.	Tektronix Part No.	Serial/Model No. Eff	Dscont	Name & Description	Mfr Code	Mfr Part Number
R219	321-0197-00	B010257		RES.,FXD,FILM:1.1K OHM,1%,0.125W	91637	MFF1816G11000F
R226	315-0153-00	B010100	B010256	RES.,FXD,CMPSN:15K OHM,5%,0.25W	01121	CB1535
R226	321-0306-00	B010257		RES.,FXD,FILM:15K OHM,1%,0.125W	91637	MFF1816G15001F
R231	315-0471-00	B010100	B010256	RES.,FXD,CMPSN:470 OHM,5%,0.25W	01121	CB4715
R231	315-0180-00	B010257		RES.,FXD,CMPSN:18 OHM,5%,0.25W	01121	CB1805
R232	321-0122-00			RES.,FXD,FILM:182 OHM,1%,0.125W	91637	MFF1816G182R0F
R233	315-0470-00	B010100	B010110	RES.,FXD,CMPSN:47 OHM,5%,0.25W	01121	CB4705
R233	315-0470-03	B010111		RES.,FXD,CMPSN:47 OHM,5%,0.25W	01121	CB4705
R237	308-0701-00			RES.,FXD,WW:0.12 OHM,5%,2W	75042	BWH-R1200J
R238	321-0133-00			RES.,FXD,FILM:237 OHM,1%,0.125W	91637	MFF1816G237R0F
R239	315-0471-00			RES.,FXD,CMPSN:470 OHM,5%,0.25W	01121	CB4715
R241	315-0361-00			RES.,FXD,CMPSN:360 OHM,5%,0.25W	01121	CB3615
R242	315-0181-00			RES.,FXD,CMPSN:180 OHM,5%,0.25W	01121	CB1815
R243	308-0742-00			RES.,FXD,WW:0.24 OHM,5%,2W	75042	BWH-R2400J
R246	315-0361-00			RES.,FXD,CMPSN:360 OHM,5%,0.25W	01121	CB3615
R248	315-0470-00	B010100	B010110	RES.,FXD,CMPSN:47 OHM,5%,0.25W	01121	CB4705
R248	315-0470-03	B010111		RES.,FXD,CMPSN:47 OHM,5%,0.25W	01121	CB4705
R249	315-0181-00			RES.,FXD,CMPSN:180 OHM,5%,0.25W	01121	CB1815
R410	315-0103-00			RES.,FXD,CMPSN:10K OHM,5%,0.25W	01121	CB1035
R416	315-0272-00			RES.,FXD,CMPSN:2.7K OHM,5%,0.25W	01121	CB2725
R417	315-0102-00			RES.,FXD,CMPSN:1K OHM,5%,0.25W	01121	CB1025
R418	315-0473-00			RES.,FXD,CMPSN:47K OHM,5%,0.25W	01121	CB4735
R420	321-0316-00			RES.,FXD,FILM:19.1K OHM,1%,0.125W	91637	MFF1816G19101F
R421	315-0393-00			RES.,FXD,CMPSN:39K OHM,5%,0.25W	01121	CB3935
R422	315-0301-00			RES.,FXD,CMPSN:300 OHM,5%,0.25W	01121	CB3015
R423	315-0181-00			RES.,FXD,CMPSN:180 OHM,5%,0.25W	01121	CB1815
R424	315-0101-00			RES.,FXD,CMPSN:100 OHM,5%,0.25W	01121	CB1015
R426	315-0272-00			RES.,FXD,CMPSN:2.7K OHM,5%,0.25W	01121	CB2725
R427	315-0102-00			RES.,FXD,CMPSN:1K OHM,5%,0.25W	01121	CB1025
R428	315-0273-00			RES.,FXD,CMPSN:27K OHM,5%,0.25W	01121	CB2735
R429	315-0103-00			RES.,FXD,CMPSN:10K OHM,5%,0.25W	01121	CB1035
R430	321-0332-00			RES.,FXD,FILM:28K OHM,1%,0.125W	91637	MFF1816G28001F
R431	321-0318-00			RES.,FXD,FILM:20K OHM,1%,0.125W	91637	MFF1816G20001F
R432	315-0101-00			RES.,FXD,CMPSN:100 OHM,5%,0.25W	01121	CB1015
R433	315-0101-00			RES.,FXD,CMPSN:100 OHM,5%,0.25W	01121	CB1015
R435	315-0472-00			RES.,FXD,CMPSN:4.7K OHM,5%,0.25W	01121	CB4725
R437	315-0272-00			RES.,FXD,CMPSN:2.7K OHM,5%,0.25W	01121	CB2725
R438	315-0392-00			RES.,FXD,CMPSN:3.9K OHM,5%,0.25W	01121	CB3925
R439	315-0471-00			RES.,FXD,CMPSN:470 OHM,5%,0.25W	01121	CB4715
R442	308-0299-00			RES.,FXD,WW:300 OHM,1%,3W	01686	T2A-300R-F-10
R444	323-0085-00			RES.,FXD,FILM:75 OHM,1%,0.50W	91637	MFF1226G75R00F
R445	315-0182-00			RES.,FXD,CMPSN:1.8K OHM,5%,0.25W	01121	CB1825
R447	315-0471-00			RES.,FXD,CMPSN:470 OHM,5%,0.25W	01121	CB4715
R448	315-0202-00			RES.,FXD,CMPSN:2K OHM,5%,0.25W	01121	CB2025
R449	315-0103-00			RES.,FXD,CMPSN:10K OHM,5%,0.25W	01121	CB1035
R454	321-0293-00			RES.,FXD,FILM:11K OHM,1%,0.125W	91637	MFF1816G11001F
R455	321-0251-00			RES.,FXD,FILM:4.02K OHM,1%,0.125W	91637	MFF1816G40200F
R456	321-0235-00			RES.,FXD,FILM:2.74K OHM,1%,0.125W	91637	MFF1816G27400F
R458	315-0393-00			RES.,FXD,CMPSN:39K OHM,5%,0.25W	01121	CB3935
R459	315-0101-00			RES.,FXD,CMPSN:100 OHM,5%,0.25W	01121	CB1015
R464	315-0682-00			RES.,FXD,CMPSN:6.8K OHM,5%,0.25W	01121	CB6825
R465	321-0277-00			RES.,FXD,FILM:7.5K OHM,1%,0.125W	91637	MFF1816G75000F
R469	315-0203-00			RES.,FXD,CMPSN:20K OHM,5%,0.25W	01121	CB2035
R475	321-0235-00			RES.,FXD,FILM:2.74K OHM,1%,0.125W	91637	MFF1816G27400F
R476	315-0470-00			RES.,FXD,CMPSN:47 OHM,5%,0.25W	01121	CB4705
R477	321-0301-00			RES.,FXD,FILM:13.3K OHM,1%,0.125W	91637	MFF1816G13301F
R478	315-0470-00			RES.,FXD,CMPSN:47 OHM,5%,0.25W	01121	CB4705

Microfiche scan by vintageTEK - Your donations help support the museum - vintagetek.org

Ckt No.	Tektronix Part No.	Serial/Model No. Eff	Dscont	Name & Description	Mfr Code	Mfr Part Number
R479	315-0152-00			RES.,FXD,CMPSN:1.5K OHM,5%,0.25W	01121	CB1525
R485	315-0470-00			RES.,FXD,CMPSN:47 OHM,5%,0.25W	01121	CB4705
R486	315-0102-00			RES.,FXD,CMPSN:1K OHM,5%,0.25W	01121	CB1025
R487	321-0301-00			RES.,FXD,FILM:13.3K OHM,1%,0.125W	91637	MFF1816G13301F
R488	315-0752-00			RES.,FXD,CMPSN:7.5K OHM,5%,0.25W	01121	CB7525
R489	315-0103-00			RES.,FXD,CMPSN:10K OHM,5%,0.25W	01121	CB1035
R494	311-1879-00			RES.,VAR,NONWIR:20K OHM,0.50W	73138	68-6-0
R495	315-0470-00			RES.,FXD,CMPSN:47 OHM,5%,0.25W	01121	CB4705
R499	315-0470-00			RES.,FXD,CMPSN:47 OHM,5%,0.25W	01121	CB4705
R1023	317-0104-00			RES.,FXD,CMPSN:100K OHM,5%,0.125W	01121	BB1045
R1024	321-0239-00			RES.,FXD,FILM:3.01K OHM,1%,0.125W	91637	MFF1816G30100F
R1025	321-0273-00			RES.,FXD,FILM:6.81K OHM,1%,0.125W	91637	MFF1816G68100F
R1027	317-0221-00			RES.,FXD,CMPSN:220 OHM,5%,0.125W	01121	BB2215
R1029	315-0122-00			RES.,FXD,CMPSN:1.2K OHM,5%,0.25W	01121	CB1225
R1031	308-0641-00			RES.,FXD,WW:9.90 OHM,0.5%,0.5W	14193	S-04 9.9 OHM 0.5
R1032	321-0193-00			RES.,FXD,FILM:1K OHM,1%,0.125W	91637	MFF1816G10000F
R1033	321-0281-00			RES.,FXD,FILM:8.25K OHM,1%,0.125W	91637	MFF1816G82500F
R1035	307-0472-00			RES.,THERMAL:100K OHM,5% DISC	15801	JP51J5
R1038	321-0201-00			RES.,FXD,FILM:1.21K OHM,1%,0.125W	91637	MFF1816G12100F
R1039	321-0327-00			RES.,FXD,FILM:24.9K OHM,1%,0.125W	91637	MFF1816G24901F
S42	260-0834-00	B010100	B011597	SWITCH,TOGGLE:DPDT,5A,125VAC,0.25-40 THD	09353	U21-SHZQE
S42	260-2119-00	B011598		SWITCH,TOGGLE:DPDT,3A,250VAC	09353	9201 SHZQE
T100	120-1069-00			XFMR,PWR,STPDN:	80009	120-1069-00
U196	156-0105-04			MICROCIRCUIT,LI:OPNL AMPL,SCREENED	80009	156-0105-04
U199	156-0105-04			MICROCIRCUIT,LI:OPNL AMPL,SCREENED	80009	156-0105-04
U202	156-0783-00			MICROCIRCUIT,LI:PRECISION VOLTAGE REFR	27014	LM399
U206	156-0105-04			MICROCIRCUIT,LI:OPNL AMPL,SCREENED	80009	156-0105-04
U209	156-0105-04			MICROCIRCUIT,LI:OPNL AMPL,SCREENED	80009	156-0105-04
U430	156-0067-00			MICROCIRCUIT,LI:OPERATIONAL AMPLIFIER	02735	85145
U800	156-0930-00			MICROCIRCUIT,LI:NEGATIVE VOLTAGE REGULATOR	04713	SC75012P
VR203	152-0226-00			SEMICOND DEVICE:ZENER,0.4W,5.1V,5%	14552	TD3810980
Y1026	158-0043-00			XTAL UNIT,QTZ:4.433618 MHZ,+1-5PPM	71034	A606-1

Microfiche scan by vintageTEK - Your donations help support the museum - vintagetek.org

REPLACEABLE MECHANICAL PARTS

PARTS ORDERING INFORMATION

Replacement parts are available from or through your local Tektronix, Inc. Field Office or representative.

Changes to Tektronix instruments are sometimes made to accommodate improved components as they become available, and to give you the benefit of the latest circuit improvements developed in our engineering department. It is therefore important, when ordering parts, to include the following information in your order: Part number, instrument type or number, serial number, and modification number if applicable.

If a part you have ordered has been replaced with a new or improved part, your local Tektronix, Inc. Field Office or representative will contact you concerning any change in part number.

Change information, if any, is located at the rear of this manual.

SPECIAL NOTES AND SYMBOLS

X000	Part first added at this serial number
00X	Part removed after this serial number

FIGURE AND INDEX NUMBERS

Items in this section are referenced by figure and index numbers to the illustrations.

INDENTATION SYSTEM

This mechanical parts list is indented to indicate item relationships. Following is an example of the indentation system used in the description column.

```
1 2 3 4 5                    Name & Description

Assembly and/or Component
Attaching parts for Assembly and/or Component
                - - - * - - -
  Detail Part of Assembly and/or Component
  Attaching parts for Detail Part
                - - - * - - -
    Parts of Detail Part
    Attaching parts for Parts of Detail Part
                - - - * - - -
```

Attaching Parts always appear in the same indentation as the item it mounts, while the detail parts are indented to the right. Indented items are part of, and included with, the next higher indentation. The separation symbol - - - * - - - indicates the end of attaching parts.

Attaching parts must be purchased separately, unless otherwise specified.

ITEM NAME

In the Parts List, an Item Name is separated from the description by a colon (:). Because of space limitations, an Item Name may sometimes appear as incomplete. For further Item Name identification, the U.S. Federal Cataloging Handbook H6-1 can be utilized where possible.

ABBREVIATIONS

"	INCH
#	NUMBER SIZE
ACTR	ACTUATOR
ADPTR	ADAPTER
ALIGN	ALIGNMENT
AL	ALUMINUM
ASSEM	ASSEMBLED
ASSY	ASSEMBLY
ATTEN	ATTENUATOR
AWG	AMERICAN WIRE GAGE
BD	BOARD
BRKT	BRACKET
BRS	BRASS
BRZ	BRONZE
BSHG	BUSHING
CAB	CABINET
CAP	CAPACITOR
CER	CERAMIC
CHAS	CHASSIS
CKT	CIRCUIT
COMP	COMPOSITION
CONN	CONNECTOR
COV	COVER
CPLG	COUPLING
CRT	CATHODE RAY TUBE
DEG	DEGREE
DWR	DRAWER
ELCTRN	ELECTRON
ELEC	ELECTRICAL
ELCTLT	ELECTROLYTIC
ELEM	ELEMENT
EPL	ELECTRICAL PARTS LIST
EQPT	EQUIPMENT
EXT	EXTERNAL
FIL	FILLISTER HEAD
FLEX	FLEXIBLE
FLH	FLAT HEAD
FLTR	FILTER
FR	FRAME or FRONT
FSTNR	FASTENER
FT	FOOT
FXD	FIXED
GSKT	GASKET
HDL	HANDLE
HEX	HEXAGON
HEX HD	HEXAGONAL HEAD
HEX SOC	HEXAGONAL SOCKET
HLCPS	HELICAL COMPRESSION
HLEXT	HELICAL EXTENSION
HV	HIGH VOLTAGE
IC	INTEGRATED CIRCUIT
ID	INSIDE DIAMETER
IDENT	IDENTIFICATION
IMPLR	IMPELLER
IN	INCH
INCAND	INCANDESCENT
INSUL	INSULATOR
INTL	INTERNAL
LPHLDR	LAMPHOLDER
MACH	MACHINE
MECH	MECHANICAL
MTG	MOUNTING
NIP	NIPPLE
NON WIRE	NOT WIRE WOUND
OBD	ORDER BY DESCRIPTION
OD	OUTSIDE DIAMETER
OVH	OVAL HEAD
PH BRZ	PHOSPHOR BRONZE
PL	PLAIN or PLATE
PLSTC	PLASTIC
PN	PART NUMBER
PNH	PAN HEAD
PWR	POWER
RCPT	RECEPTACLE
RES	RESISTOR
RGD	RIGID
RLF	RELIEF
RTNR	RETAINER
SCH	SOCKET HEAD
SCOPE	OSCILLOSCOPE
SCR	SCREW
SE	SINGLE END
SECT	SECTION
SEMICOND	SEMICONDUCTOR
SHLD	SHIELD
SHLDR	SHOULDERED
SKT	SOCKET
SL	SLIDE
SLFLKG	SELF-LOCKING
SLVG	SLEEVING
SPR	SPRING
SQ	SQUARE
SST	STAINLESS STEEL
STL	STEEL
SW	SWITCH
T	TUBE
TERM	TERMINAL
THD	THREAD
THK	THICK
TNSN	TENSION
TPG	TAPPING
TRH	TRUSS HEAD
V	VOLTAGE
VAR	VARIABLE
W/	WITH
WSHR	WASHER
XFMR	TRANSFORMER
XSTR	TRANSISTOR

Microfiche scan by vintageTEK - Your donations help support the museum - vintagetek.org

CROSS INDEX—MFR. CODE NUMBER TO MANUFACTURER

Mfr. Code	Manufacturer	Address	City, State, Zip
000BK	STAUFFER SUPPLY	105 SE TAYLOR	PORTLAND, OR 97214
00779	AMP, INC.	P O BOX 3608	HARRISBURG, PA 17105
01295	TEXAS INSTRUMENTS, INC., SEMICONDUCTOR GROUP	P O BOX 5012, 13500 N CENTRAL EXPRESSWAY	DALLAS, TX 75222
02777	HOPKINS ENGINEERING COMPANY	12900 FOOTHILL BLVD.	SAN FERNANDO, CA 91342
04963	MINNESOTA MINING AND MFG. CO., ADHESIVES COATINGS AND SEALERS DIVISION	3M CENTER	ST. PAUL, MN 55101
06666	GENERAL DEVICES CO., INC.	525 S. WEBSTER AVE.	INDIANAPOLIS, IN 46219
08261	SPECTRA-STRIP CORP.	7100 LAMPSON AVE.	GARDEN GROVE, CA 92642
12327	FREEWAY CORPORATION	9301 ALLEN DRIVE	CLEVELAND, OH 44125
16428	BELDEN CORP.	P. O. BOX 1331	RICHMOND, IN 47374
22526	BERG ELECTRONICS, INC.	YOUK EXPRESSWAY	NEW CUMBERLAND, PA 17070
24931	SPECIALITY CONNECTOR CO., INC.	2620 ENDRESS PLACE	GREENWOOD, IN 46142
49671	RCA CORPORATION	30 ROCKEFELLER PLAZA	NEW YORK, NY 10020
59730	THOMAS AND BETTS COMPANY	36 BUTLER ST.	ELIZABETH, NJ 07207
71785	TRW, CINCH CONNECTORS	1501 MORSE AVENUE	ELK GROVE VILLAGE, IL 60007
73743	FISCHER SPECIAL MFG. CO.	446 MORGAN ST.	CINCINNATI, OH 45206
73803	TEXAS INSTRUMENTS, INC., METALLURGICAL MATERIALS DIV.	34 FOREST STREET	ATTLEBORO, MA 02703
74932	INDUSTRIAL SPECIALTIES, INC.		WARREN, MI 48091
77250	PHEOLL MANUFACTURING CO., DIVISION OF ALLIED PRODUCTS CORP.	5700 W. ROOSEVELT RD.	CHICAGO, IL 60650
78189	ILLINOIS TOOL WORKS, INC. SHAKEPROOF DIVISION	ST. CHARLES ROAD	ELGIN, IL 60120
78553	EATON CORPORATION, ENGINEERED FASTENERS DIVISION, TINNERMAN PLANT	PO BOX 6688,8700 BROOKPARK RD.	CLEVELAND, OH 44101
79807	WROUGHT WASHER MFG. CO.	2100 S. O BAY ST.	MILWAUKEE, WI 53207
80009	TEKTRONIX, INC.	P O BOX 500	BEAVERTON, OR 97077
83309	ELECTRICAL SPECIALITY CO., SUBSIDIARY OF BELDEN CORP.	213 E. HARRIS AVE. SOUTH	SAN FRANCISCO, CA 94080
83385	CENTRAL SCREW CO.	2530 CRESCENT DR.	BROADVIEW, IL 60153
85471	BOYD, A. B., CO.	2527 GRANT AVENUE	SAN LEANDRO, CA 94579
86445	PENN FIBRE AND SPECIALTY CO., INC.	2032 E. WESTMORELAND ST.	PHILADELPHIA, PA 19134
86928	SEASTROM MFG. COMPANY, INC.	701 SONORA AVENUE	GLENDALE, CA 91201
95987	WECKESSER CO., INC.	4444 WEST IRVING PARK RD.	CHICAGO, IL 60641

Microfiche scan by vintageTEK - Your donations help support the museum - vintagetek.org

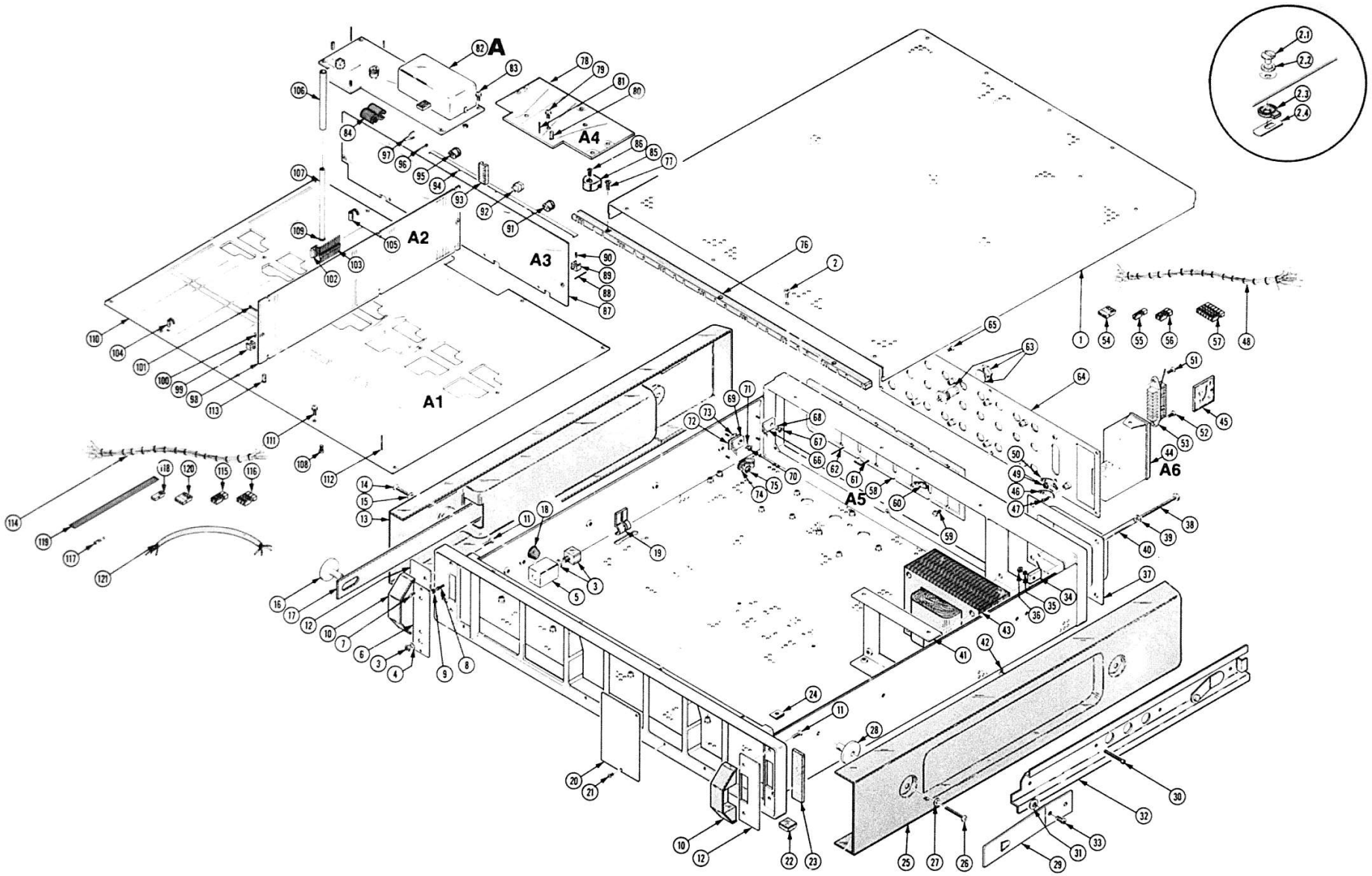

REV A MAR 1980

1411 PAL GENERATOR

Microfiche scan by vintageTEK - Your donations help support the museum - vintagetek.org

Fig. & Index No.	Tektronix Part No.	Serial/Model No. Eff	Dscont	Qty	1 2 3 4 5	Name & Description	Mfr Code	Mfr Part Number
1-1	200-1977-00	B010100	B010239	1		COVER,CONTACT:TOP	80009	200-1977-00
	200-2256-00	B010240		1		COVER,TOP:	80009	200-2256-00
						(ATTACHING PARTS)		
-2	211-0662-00	B010100	B010239X	10		SCREW,MACHINE:6-32 X 0.375 L,FLH,100 DEG	000BK	OBD
	214-0603-02			8		. PIN ASSY,SECRG:	80009	214-0603-02
-2.1	214-0603-01	XB010240		8		. . PIN,SECURING:0.27 INCH LONG	80009	214-0603-01
-2.2	214-0604-00	XB010240		8		. . WASH.,SPG TNSN:0.26 ID X 0.47 INCH OD	80009	214-0604-00
-2.3	386-0227-01	XB010240		8		. STOP,CLP,RIM CL:BLACK ACETAL	80009	386-0227-01
-2.4	386-1151-00	XB010240		8		. CLAMP,RIM CLENC:SPG STL CD PL	80009	386-1151-00
						- - - * - - -		
-3	----- -----			1		SWITCH,TOGGLE:(SEE S42 REPL)		
-4	210-0940-00			2		WASHER,FLAT:0.25 ID X 0.375 INCH OD,STL	79807	OBD
-5	200-1981-00	B010100	B011598X	1		COVER,POWER SW:	80009	200-1981-00
-6	333-2259-00			1		PANEL,FRONT:POWER	80009	333-2259-00
						(ATTACHING PARTS)		
-7	213-0277-00			2		SCR,TPG,THD FOR:2-56 X 0.312 INCH,PNH STL	83385	OBD
						- - - * - - -		
-8	----- -----			2		EMITTING DIO:(SEE DS210,DS422 REPL)		
-9	162-0561-00			FT		INSUL SLVG,ELEC:HT SHRINK,0.093,POLYOLEFIN	80009	162-0561-00
-10	367-0226-01			2		HANDLE,SCOPE:3.238 INCHES,LONG,PLASTIC	80009	367-0226-01
						(ATTACHING PARTS)		
-11	211-0511-00			4		SCREW,MACHINE:6-32 X 0.500,PNH,STL,CD PL	83385	OBD
						- - - * - - -		
-12	124-0332-00			2		STRIP,TRIM:HANDLE	80009	124-0332-00
-13	200-1997-00			1		COVER,SIDE:LEFT	80009	200-1997-00
	----- -----			-		(CABINET ONLY)		
						(ATTACHING PARTS)		
-14	212-0082-00			2		SCREW,MACHINE:8-32 X 1.250 INCH,PNH STL	83385	OBD
	----- -----			-		(CABINET ONLY)		
-15	210-0804-00			2		WASHER,FLAT:0.17 ID X 0.375 INCH OD,STL	12327	OBD
	----- -----			-		(CABINET ONLY)		
-16	361-0789-00			2		SPACER,SLEEVE:0.188 ID X 0.875 L,AL	80009	361-0789-00
	----- -----			-		(CABINET ONLY)		
-17	367-0227-00			1		HANDLE,CARRYING:13.781 INCHES LONG,STL	80009	367-0227-00
	----- -----			-		(CABINET ONLY)		
						- - - * - - -		
-18	348-0430-00	B010100	B010602	2		FOOT,PLASTIC:0.625 OD X 0.32 W/ADH BACK	74932	SJ5027
	348-0090-01	B010603		2		PAD,CUSHIONING:0.69 X 0.46 X0.312 SI RBR	85471	OBD
-19	343-0298-00			1		CLAMP,LOOP:PLASTIC,W/ADHESIVE BACK	95987	HPC25
-20	333-2171-00			4		PANEL,FRONT:BLANK,SINGLE	80009	333-2171-00
						(ATTACHING PARTS)		
-21	213-0277-00			8		SCR,TPG,THD FOR:2-56 X 0.312 INCH,PNH STL	83385	OBD
						- - - * - - -		
-22	348-0502-00			4		FOOT,CABINET:0.812 SQ X 0.3 HIGH	04963	SJ-5023GRAY
-23	348-0090-01			2		PAD,CUSHIONING:0.69 X 0.46 X0.312 SI RBR	85471	OBD
-24	220-0789-00	B010100	B010239X	10		NUT,SHEET SPR:6-32 X 0.44 LX 0.35"W,SST	78553	C18050SS-632
-25	200-1997-01			1		COVER,SIDE:RIGHT	80009	200-1997-01
	----- -----			-		(CABINET ONLY)		
						(ATTACHING PARTS)		
-26	212-0082-00			2		SCREW,MACHINE:8-32 X 1.250 INCH,PNH STL	83385	OBD
	----- -----			-		(CABINET ONLY)		
-27	210-0804-00			2		. WASHER,FLAT:0.17 ID X 0.375 INCH OD,STL	12327	OBD
	----- -----			-		(CABINET ONLY)		
-28	361-0789-00			2		SPACER,SLEEVE:0.188 ID X 0.875 L,AL	80009	361-0789-00
	----- -----			-		(CABINET ONLY)		
						- - - * - - -		
-29	214-2442-00			2		SPRING,FLAT:CHASSIS TRACKLOCK	80009	214-2442-00
	----- -----			-		(RACKMOUNT ONLY)		
						(ATTACHING PARTS)		
-30	212-0004-00			4		SCREW,MACHINE:8-32 X 0.312 INCH,PNH STL	83385	OBD
	----- -----			-		(RACKMOUNT ONLY)		
-31	210-1266-00			2		WASHER,FLAT:0.193 ID X 0.475 OD X 0.0075"	86928	5702-79-75
	----- -----			-		(RACKMOUNT ONLY)		
						- - - * - - -		

Microfiche scan by vintageTEK - Your donations help support the museum - vintagetek.org

Fig. & Index No.	Tektronix Part No.	Serial/Model No. Eff	Dscont	Qty	1 2 3 4 5	Name & Description	Mfr Code	Mfr Part Number
1-32	351-0104-03			PR		SLIDE SECT,DWR:12.625 L,W/O HARDWARE	06666	C-720-2
	----- -----			-		(RACKMOUNT ONLY)		
						(ATTACHING PARTS)		
-33	212-0004-00			6		SCREW,MACHINE:8-32 X 0.312 INCH,PNH STL	83385	OBD
	----- -----			-		(RACKMOUNT ONLY)		
						- - - * - - -		
-34	----- -----			1		TRANSISTOR:(SEE Q152 REPL)		
						(ATTACHING PARTS)		
-35	210-0406-00			1		NUT,PLAIN,HEX.:4-40 X 0.188 INCH,BRS	73743	12161-50
-36	210-1122-00			1		WASHER,LOCK:0.12 ID,DISHED,0.025 THK	86928	OBD
						- - - * - - -		
-37	200-0772-03			1		COVER,ELEC,XFMR:FINISHED	80009	200-0772-03
						(ATTACHING PARTS)		
-38	212-0515-00			1		SCREW,MACHINE:10-32 X 2.250" HEX.HD STL	83385	OBD
-39	210-0812-00			4		WASHER,NONMETAL:#10,FIBER	86445	OBD
-40	166-0227-00			4		INS SLV,ELEC:0.187 ID X 1.50 INCH LONG	80009	166-0227-00
						- - - * - - -		
-41	407-1814-00			1		BRACKET,XFMR:ALUMINUM	80009	407-1814-00
						(ATTACHING PARTS)		
-42	211-0538-00			2		SCREW,MACHINE:6-32 X 0.312"100 DEG,FLH STL	83385	OBD
						- - - * - - -		
-43	----- -----			1		TRANSFORMER:(SEE T100 REPL)		
	255-0632-00	XB010128		1		PLASTIC SHEET:2.5 X 11.0 X 0.002 ADH BACK	80009	255-0632-00
-44	----- -----			1		SELECTOR,VOLTS:(SEE LF42 REPL)		
-45	118-0239-00			1		. CKT BOARD ASSY:VOLTAGE SELECTION	02777	2-028-0009
-46	210-0202-00			1		TERMINAL,LUG:0.146 ID,LOCKING,BRZ TINNED	78189	2104-06-00-2520N
						(ATTACHING PARTS)		
-47	211-0504-00			1		SCREW,MACHINE:6-32 X 0.25 INCH,PNH STL	83385	OBD
						- - - * - - -		
-48	179-2467-00			1		WIRING HARNESS,:CHASSIS	80009	179-2467-00
						(ATTACHING PARTS)		
-49	210-0586-00			1		NUT,PL,ASSEM WA:4-40 X 0.25,STL CD PL	83385	OBD
-50	210-0204-00			1		TERMINAL,LUG:0.146 INCH DIA DE,45 DEG BEND	78189	2157-06-01-2520N
-51	211-0008-00			1		SCREW,MACHINE:4-40 X 0.25 INCH,PNH STL	83385	OBD
-52	211-0097-00			1		SCREW,MACHINE:4-40 X 0.312 INCH,PNH STL	83385	OBD
						- - - * - - -		
-53	131-1921-00			1		. CONN,RCPT,ELEC:36 POSN,BAIL MT,4A	00779	2-552275-1
-54	352-0161-01			1		. CONN BODY,PL,EL:3 WIRE BROWN	80009	352-0161-01
	352-0161-02			1		. CONN BODY,PL,EL:3 WIRE RED	80009	352-0161-02
	352-0161-03			1		. CONN BODY,PL,EL:3 WIRE ORANGE	80009	352-0161-03
	352-0161-04			1		. CONN BODY,PL,EL:3 WIRE YELLOW	80009	352-0161-04
	352-0161-05			1		. CONN BODY,PL,EL:3 WIRE GREEN	80009	352-0161-05
-55	352-0197-00			1		. CONN BODY,PL,EL:1 WIRE BLACK	80009	352-0197-00
-55	352-0198-01			1		. HLDR,TERM CONN:2 WIRE BROWN	80009	352-0198-01
	352-0198-02			1		. HLDR,TERM CONN:2 WIRE RED	80009	352-0198-02
	352-0198-03			1		. HLDR,TERM CONN:2 WIRE ORANGE	80009	352-0198-03
	352-0198-04			1		. HLDR,TERM CONN:2 WIRE YELLOW	80009	352-0198-04
	352-0198-05			1		. HLDR,TERM CONN:2 WIRE GREEN	80009	352-0198-05
	352-0198-06			1		. HLDR,TERM CONN:2 WIRE BLUE	80009	352-0198-06
-57	352-0202-00			1		. HLDR,TERM CONN:6 WIRE BLACK	80009	352-0202-00
-58	----- -----			1		CKT BOARD ASSY:REAR INTCON(SEE A5 REPL)		
						(ATTACHING PARTS)		
-59	211-0292-00			8		SCR,ASSEM WSHR:4-40 X 0.29,BRS NI PL	78189	OBD
-60	210-0201-00			2		TERMINAL,LUG:0.12 ID,LOCKING,BRZ TIN PL	86928	OBD
						- - - * - - -		
	----- -----			-		CKT BOARD ASSY INCLUDES:		
-61	131-0787-00			12		. CONTACT,ELEC:0.64 INCH LONG	22526	47359
-62	131-0608-00			10		. TERMINAL,PIN:0.365 L X 0.025 PH BRZ GOLD	22526	47357
	131-0589-00			12		. TERMINAL,PIN:0.46 L X 0.025 SQ	80009	131-0589-00
	131-0591-00			12		. CONTACT,ELEC:0.835 INCH LONG	22526	47352
-63	131-1910-00			27		CONN,RCPT,ELEC:BNC,FEMALE	24931	28JR284-1
-64	333-2258-00			1		PANEL,REAR:1411	80009	333-2258-00
						(ATTACHING PARTS)		
-65	213-0088-00			6		SCR,TPG,THD CTG:4-24 X 0.25 INCH,PNH STL	83385	OBD
						- - - * - - -		

Microfiche scan by vintageTEK - Your donations help support the museum - vintagetek.org

Fig. & Index No.	Tektronix Part No.	Serial/Model No. Eff	Dscont	Qty	1 2 3 4 5	Name & Description	Mfr Code	Mfr Part Number
1-66	----- -----			3		TRANSISTOR:(SEE Q155,Q243,Q246 REPL)		
						(ATTACHING PARTS)		
-67	210-0406-00			3		NUT,PLAIN,HEX.:4-40 X 0.188 INCH,BRS	73743	12161-50
-68	210-1122-00			3		WASHER,LOCK:0.12 ID,DISHED,0.025 THK	86928	OBD
						- - - * - - -		
-69	----- -----			1		MICROCIRCUIT,LI:(SEE U800 REPL)		
						(ATTACHING PARTS)		
-70	210-0406-00			1		NUT,PLAIN,HEX.:4-40 X 0.188 INCH,BRS	73743	12161-50
-71	210-1178-00			1		WASHER,SHLDR:U/W TO-220 TRANSISTOR	49671	DF137A
						- - - * - - -		
-72	342-0163-00	B010100	B010142	4		INSULATOR,PLATE:XSTR,0.675 X 0.625 X 0.001"	80009	342-0163-00
	342-0202-00	B010143		1		INSULATOR,PLATE:TRANSISTOR	01295	10-21-023-106
-73	210-1178-00			1		WASHER,SHLDR:U/W TO-220 TRANSISTOR	49671	DF137A
-74	343-0136-00			1		CLAMP,LOOP:0.234 INCH MOUNTING HOLE	80009	343-0136-00
						(ATTACHING PARTS)		
-75	210-0586-00			1		NUT,PL,ASSEM WA:4-40 X 0.25,STL CD PL	83385	OBD
						- - - * - - -		
-76	361-0783-00			2		SPACER,SHLD BD:	80009	361-0783-00
						(ATTACHING PARTS)		
-77	211-0038-00			6		SCREW,MACHINE:4-40 X 0.312,FLH,100 DEG	83385	OBD
						- - - * - - -		
-78	----- -----			1		CKT BOARD ASSY:RECTIFIER(SEE A4 REPL)		
						(ATTACHING PARTS)		
-79	211-0292-00			6		SCR,ASSEM WSHR:4-40 X 0.29,BRS NI PL	78189	OBD
						- - - * - - -		
	----- -----			-		CKT BOARD ASSY INCLUDES:		
-80	214-2441-00			2		. PIN,SHLDR,HDLS:CIRCUIT CARD	80009	214-2441-00
-81	131-0589-00			20		. TERMINAL,PIN:0.46 L X 0.025 SQ	80009	131-0589-00
-82	672-0682-00			1		CKT BOARD ASSY:SUBCARRIER INPUT	80009	672-0682-00
						(ATTACHING PARTS)		
-83	211-0292-00			4		SCR,ASSEM WSHR:4-40 X 0.29,BRS NI PL	78189	OBD
						- - - * - - -		
-84	343-0170-00			3		RTNR,CA TO CA:U/W 0.25 OD CABLES	80009	343-0170-00
-85	343-0699-00			2		RETAINER,CKT CD:PLASTIC	80009	343-0699-00
						(ATTACHING PARTS)		
-86	211-0038-00			2		SCREW,MACHINE:4-40 X 0.312,FLH,100 DEG	83385	OBD
						- - - * - - -		
-87	----- -----			1		CKT BOARD ASSY:POWER SUPPLY(SEE A3 REPL)		
-88	131-0589-00			12		. TERMINAL,PIN:0.46 L X 0.025 SQ	80009	131-0589-00
-89	214-2440-00			4		. RECEPTACLE,PIN:CIRCUIT CARD	80009	214-2440-00
-90	136-0328-03			66		. SOCKET,PIN TERM:HORIZ,SQ PIN RCPT	22526	47710
-91	136-0183-00			1		. SOCKET,PLUG-IN:3 PIN,ROUND	80009	136-0183-00
-92	136-0220-00	B010100	B010632X	8		. SKT,PL-IN ELEK:TRANSISTOR 3 CONTACT,PCB MT	71785	133-23-11-034
-93	136-0260-02			3		. SKT,PL-IN ELEK:MICROCIRCUIT,16 DIP,LOW CLE	71785	133-51-92-008
-94	131-0998-00			5		. BUS BAR:9 TERM,8.132"LONG,CUT TO FIT	80009	131-0998-00
-95	136-0219-00			1		. SOCKET,PLUG-IN:4 PIN	80009	136-0219-00
-96	214-0579-00			10		. TERM,TEST POINT:BRS CD PL	80009	214-0579-00
-97	344-0154-00			2		. CLIP,ELECTRICAL:FUSE,CKT BD MT	80009	344-0154-00
-98	----- -----			1		CKT BOARD ASSY:EXTENDER(SEE A2 REPL)		
-99	214-2440-00	B010100	B010513	6		. RECEPTACLE,PIN:CIRCUIT CARD	80009	214-2440-00
	214-2440-01	B010514		6		. RECEPTACLE,PIN:CIRCUIT BOARD	80009	214-2440-01
	131-2362-00	XB010514		2		. CONN,RCPT,ELEC:CKT BD,55 CONT,FEMALE	00779	4-86105-6
	131-2363-00	XB010514		2		. CONN,RCPT,ELEC:CKT BD,34 CONT,FEMALE	00779	2-86105-5
-100	136-0328-03	B010100	B010513X	176		. SOCKET,PIN TERM:HORIZ,SQ PIN RCPT	22526	47710
-101	214-0579-00			90		. TERM,TEST POINT:BRS CD PL	80009	214-0579-00
	214-0579-02	XB010514		90		. TERM,TEST POINT:BRASS	80009	214-0579-02
-102	136-0630-00			3		. SKT,PL-IN ELEK:CKT CARD,4 CONT,FEMALE	00779	1-380949-4
-103	131-1934-00			3		. TERM. SET,PIN:1 X 36,0.1 CTR,0.9 L	22526	65539-001
	348-0070-01	XB010514		3		. PAD,CUSHIONING:0.69 INCH,RUBBER	80009	348-0070-01
-104	343-0088-00			2		CLAMP,LOOP:0.062 INCH DIA	80009	343-0088-00
-105	343-0213-00			1		CLAMP,LOOP:0.2 ID,PLASTIC	80009	343-0213-00
-106	162-0055-00			6		INSUL SLVG,ELEC:0.268 ID,VINYL,0.303 OD	83309	OBD
-107	129-0660-00			8		SPACER,POST:2.985 L X 0.250 OD,ALUMINUM	80009	129-0660-00
						(ATTACHING PARTS)		
-108	211-0008-00			8		SCREW,MACHINE:4-40 X 0.25 INCH,PNH STL	83385	OBD
-109	210-0004-00			64		WASHER,LOCK:#4 INTL,0.015THK,STL CD PL	78189	OBD
						- - - * - - -		

Microfiche scan by vintageTEK - Your donations help support the museum - vintagetek.org

Fig. & Index No.	Tektronix Part No.	Serial/Model No. Eff	Dscont	Qty	1 2 3 4 5	Name & Description	Mfr Code	Mfr Part Number
1-110	----- -----			1		CKT BOARD ASSY:INTERFACE(SEE A1 REPL)		
						(ATTACHING PARTS)		
-111	211-0292-00			14		SCR,ASSEM WSHR:4-40 X 0.29,BRS NI PL	78189	OBD
						- - - * - - -		
-112	131-0589-00			1987		. TERMINAL,PIN:0.46 L X 0.025 SQ	80009	131-0589-00
-113	214-2441-00			68		. PIN,SHLDR,HDLS:CIRCUIT CARD	80009	214-2441-00
-114	179-2492-00			1		WIRING HARNESS:TRANSFORMER	80009	179-2492-00
	343-0549-00			9		. STRAP,TIEDOWN:0.091 W X 3.62 INCH LONG	59730	TY100
-115	352-0198-00			1		. HLDR,TERM CONN:2 WIRE BLACK	80009	352-0198-00
-116	352-0199-00			1		. CONN BODY,PL,EL:3 WIRE BLACK	80009	352-0199-00
	198-3725-00			1		WIRE SET,ELEC:	80009	198-3725-00
-117	131-0707-00			4		CONNECTOR,TERM:22-26 AWG,BRS& CU BE GOLD	22526	47439
-118	352-0169-00			2		. HLDR,TERM CONN:2 WIRE BLACK	80009	352-0169-00
	198-3292-00	XB010143		1		WIRE SET,ELEC:	80009	198-3292-00
	131-0707-00			4		CONNECTOR,TERM:22-26 AWG,BRS& CU BE GOLD	22526	47439
-119	175-0827-00			FT		. CABLE,SP,ELEC:4,26 AWG,STRD,PVC JKT,RBN	08261	SS04267(1061)0C
-120	352-0162-02			1		. CONN BODY,PL,EL:4 WIRE RED	80009	352-0162-02
	352-0169-00			1		. HLDR,TERM CONN:2 WIRE BLACK	80009	352-0169-00
	352-0198-00			1		. HLDR,TERM CONN:2 WIRE BLACK	80009	352-0198-00
-121	175-1148-00			FT		. CABLE,SP,ELEC:4,22 AWG STRD,GRAY VINYL JKT	80009	175-1148-00
-122	426-1312-00	B010100	B010239	1		. FRAME,CABINET:	80009	426-1312-00
	426-1567-00	B010240		1		. FRAME,CABINET:	80009	426-1567-00
	334-3472-00			2		MARKER,IDENT:MKD INTCON CAARRANGEMENT	80009	334-3472-00

Microfiche scan by vintageTEK - Your donations help support the museum - vintagetek.org

FIG. 2 OVEN ASSY.

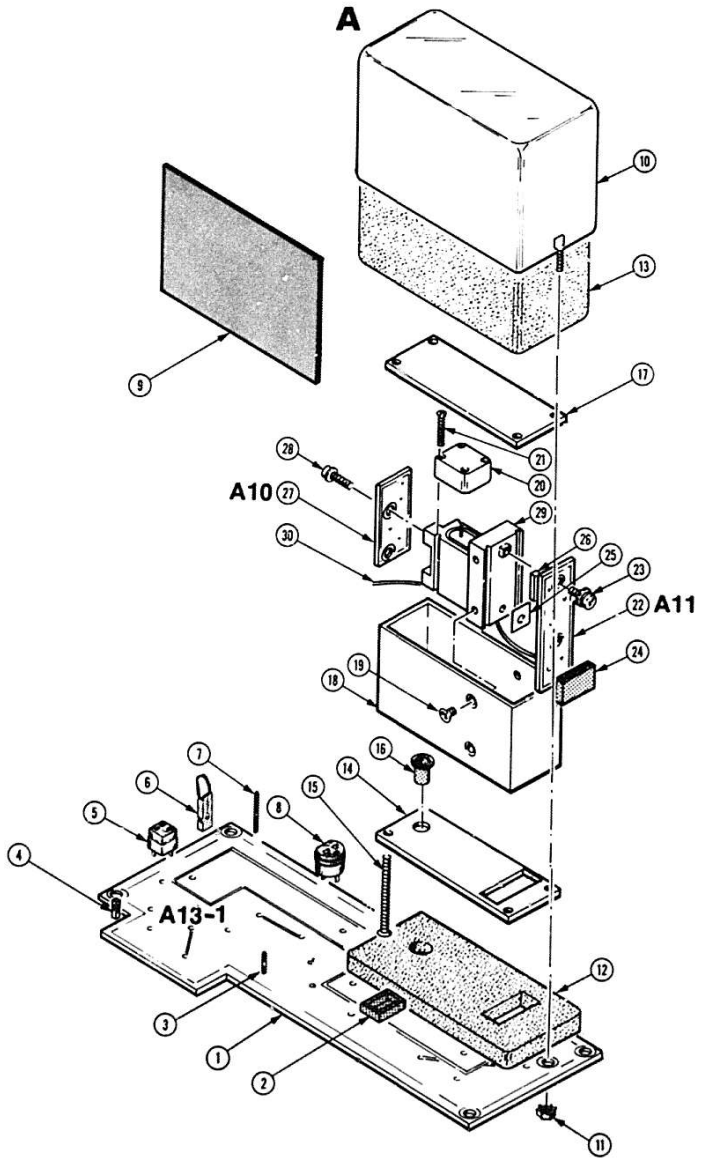

Microfiche scan by vintageTEK - Your donations help support the museum - vintagetek.org

Fig. & Index No.	Tektronix Part No.	Serial/Model No. Eff	Dscont	Qty	1 2 3 4 5	Name & Description	Mfr Code	Mfr Part Number
2-	672-0682-00			1		COMPLETE ASSY:OVEN	80009	672-0682-00
-1	----- -----			1		. CKT BOARD ASSY:SUBCARRIER INPUT		
	----- -----			-		. (SEE A13-1 REPL)		
-2	136-0514-00			1		. . SKT,PL-IN ELEC:MICROCIRCUIT,8 DIP	73803	CS9002-8
-3	131-0608-00			13		. . TERMINAL,PIN:0.365 L X 0.025 PH BRZ GOLD	22526	47357
-4	136-0263-04			9		. . SOCKET,PIN TERM:FOR 0.025 INCH SQUARE PIN	22526	75377-001
-5	136-0220-00	B010100	B010632X	16		. . SKT,PL-IN ELEK:TRANSISTOR 3 CONTACT,PCB MT	71785	133-23-11-034
-6	131-0993-00			1		. . BUS,CONDUCTOR:2 WIRE BLACK	00779	530153-2
-7	131-0589-00			2		. . TERMINAL,PIN:0.46 L X 0.025 SQ	80009	131-0589-00
-8	136-0183-00	B010100	B010632X	1		. . SOCKET,PLUG-IN:3 PIN,ROUND	80009	136-0183-00
	119-0903-00			1		. OVEN ASSEMBLY:SUBCARRIER	80009	119-0903-00
-9	255-0632-00			1		. . PLASTIC SHEET:2.5 X 11.0) 0.002 ADH BACK	80009	255-0632-00
-10	200-1838-00			1		. . COVER ASSY,OVEN:	80009	200-1838-00
						(ATTACHING PARTS)		
-11	210-0586-00			2		. . NUT,PL,ASSEM WA:4-40 X 0.25,STL CD PL	83385	OBD
						- - - * - - -		
-12	214-1096-02			1		. . INSUL,OVEN THRM:POLYURETHANE FOAM	80009	214-1096-02
-13	214-2296-01			1		. . INSUL,OVEN THRM:1.4 X 1.694 X2.994,PLSTC	80009	214-2296-01
-14	200-1739-00			1		. . COVER,OVEN:FRONT	80009	200-1739-00
						(ATTACHING PARTS)		
-15	211-0208-00			4		. . SCREW,MACHINE:4-40 X 1.625,100 DEG,FLH STL	77250	OBD
-16	352-0157-00			1		. . LAMPHOLDER:WHITE PLASTIC	80009	352-0157-00
-17	200-1740-00			1		. . COVER,OVEN:REAR	80009	200-1740-00
-18	380-0423-00			1		. . HSG,XTAL OVEN:ALUMINUM	80009	380-0423-00
						(ATTACHING PARTS)		
-19	211-0105-00			4		. . SCREW,MACHINE:4-40 X 0.188,100 DEG,FLH STL	83385	OBD
						- - - * - - -		
-20	343-0522-01			1		. . RETAINER,XTAL:	80009	343-0522-01
						(ATTACHING PARTS)		
-21	213-0202-00			4		. . SCREW,MACHINE:2-56 X 0.625 INCH,FLH STL	83385	OBD
						- - - * - - -		
-22	----- -----			1		. . CKT BOARD ASSY:TEMP CONTROL(SEE A11 REPL)		
						(ATTACHING PARTS)		
-23	211-0116-00			1		. . SCR,ASSEM WSHR:4-40 X 0.312 INCH,PNH BRS	83385	OBD
	211-0121-00			1		. . SCR,ASSEM WSHR:4-40 X 0.438 INCH,PNH BRS	83385	OBD
						- - - * - - -		
	----- -----			-		. . CKT BOARD ASSY INCLUDES:		
-24	131-1771-00			1		. . . CONNECTOR,RCPT,:CIRCUIT CARD,6 FEMALE	22526	65001-111
-25	342-0224-00			1		. . INSULATOR,PLATE:TRANSISTOR	80009	342-0224-00
-26	348-0413-00			2		. . PAD,CUSHIONING:ELECTRICAL COMPONENT	80009	348-0413-00
-27	----- -----			1		. . CKT BOARD ASSY:SUBCARRIER OSC(SEE A10 REPL)		
						(ATTACHING PARTS)		
-28	211-0116-00			2		. . SCR,ASSEM WSHR:4-40 X 0.312 INCH,PNH BRS	83385	OBD
						- - - * - - -		
-29	214-2180-00			1		. . STABILIZER,TEMP:1.22 INCHES L,W(2)4-40 THD	80009	214-2180-00
-30	198-3361-00			1		. . WIRE SET,ELEC:	80009	198-3361-00

Microfiche scan by vintageTEK - Your donations help support the museum - vintagetek.org

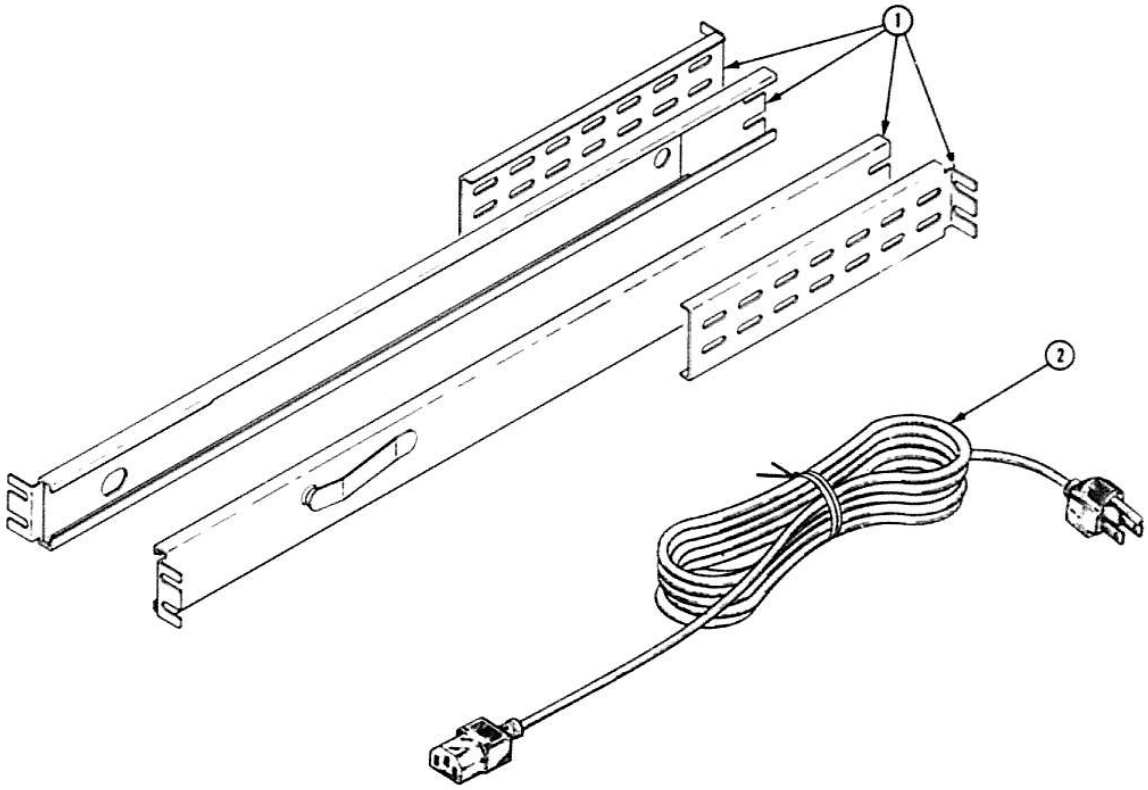

Fig. & Index No.	Tektronix Part No.	Serial/Model No. Eff	Dscont	Qty 1 2 3 4 5	Name & Description	Mfr Code	Mfr Part Number
					STANDARD ACCESSORIES		
-1	351-0487-02			PR	SLIDE,DWR EXT:W/CLOSED MOUNTING SLOTS	80009	351-0487-02
-2	161-0066-00			1	CABLE ASSY,PWR,:3,18 AWG,115V,98.0 L	16428	KH8481
-3	070-2322-00			1	MANUAL,TECH:INSTRUCTION	80009	070-2322-00

Microfiche scan by vintageTEK - Your donations help support the museum - vintagetek.org

SERVICING ILLUSTRATIONS

Information contained in this section serves as an aid to the service technician who performs the calibrations, maintenance, and troubleshooting procedures. Included are illustrations showing the adjustment and jumper locations for each circuit board, and the dimensional illustrations.

@

Microfiche scan by vintageTEK - Your donations help support the museum - vintagetek.org

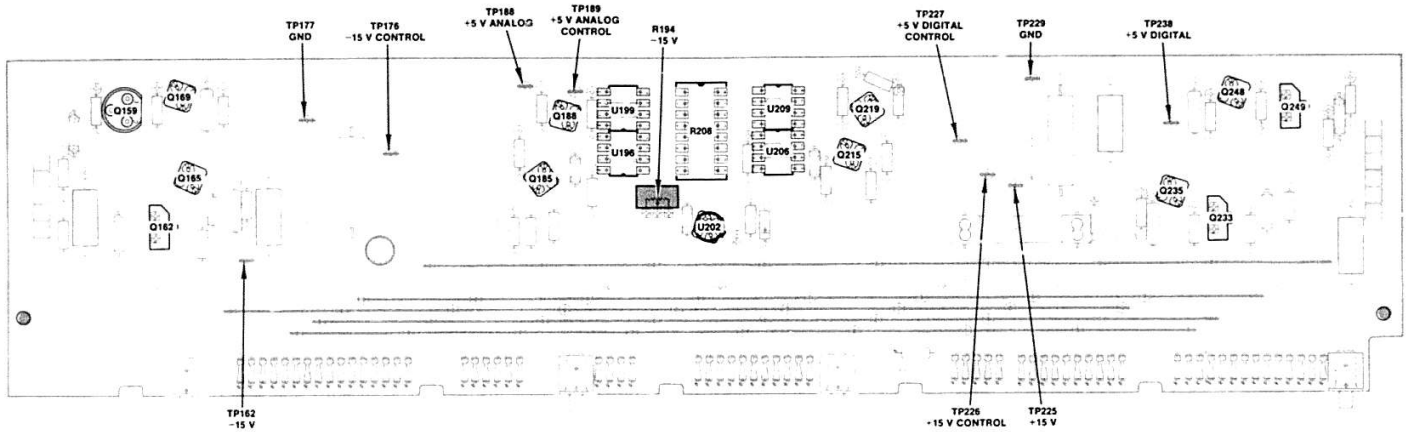

A3 POWER SUPPLY BOARD ADJUSTMENT LOCATIONS.

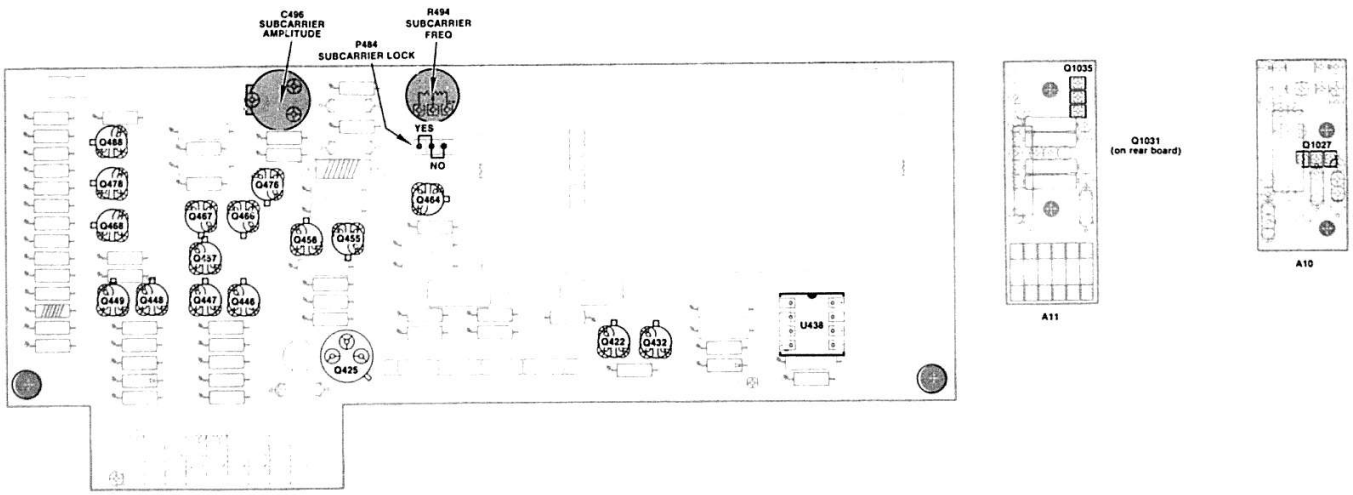

A10 SUBCARRIER OSCILLATOR, A11 TEMP CONTROL, & A13 SUBCARRIER BOARDS ADJUSTMENT AND JUMPER LOCATION

Microfiche scan by vintageTEK - Your donations help support the museum - vintagetek.org

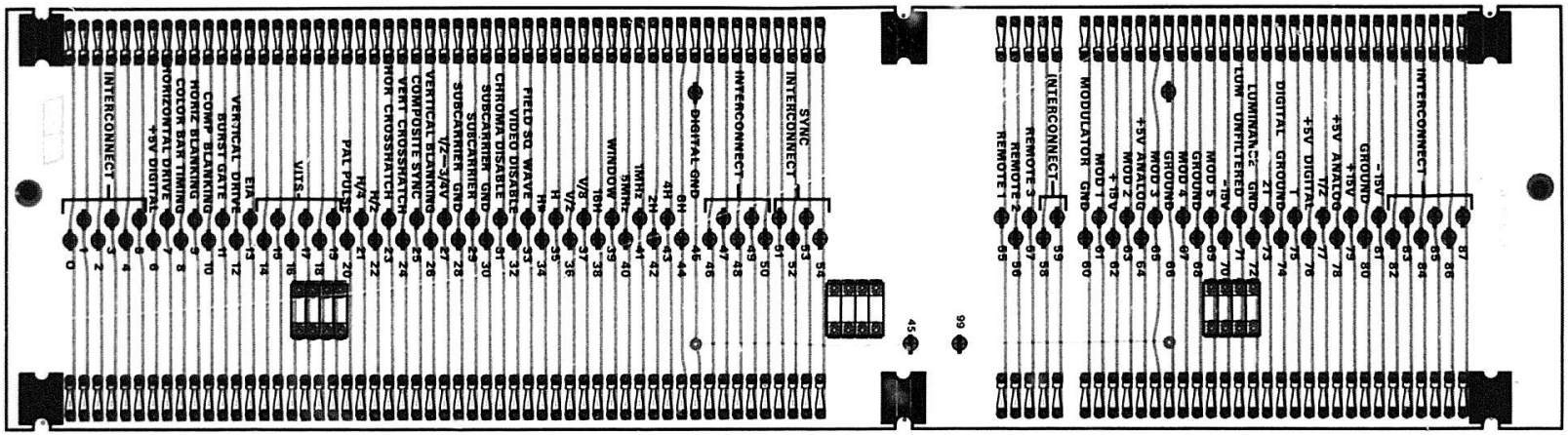

A2 EXTENDER BOARD

TOP

Microfiche scan by vintageTEK - Your donations help support the museum - vintagetek.org

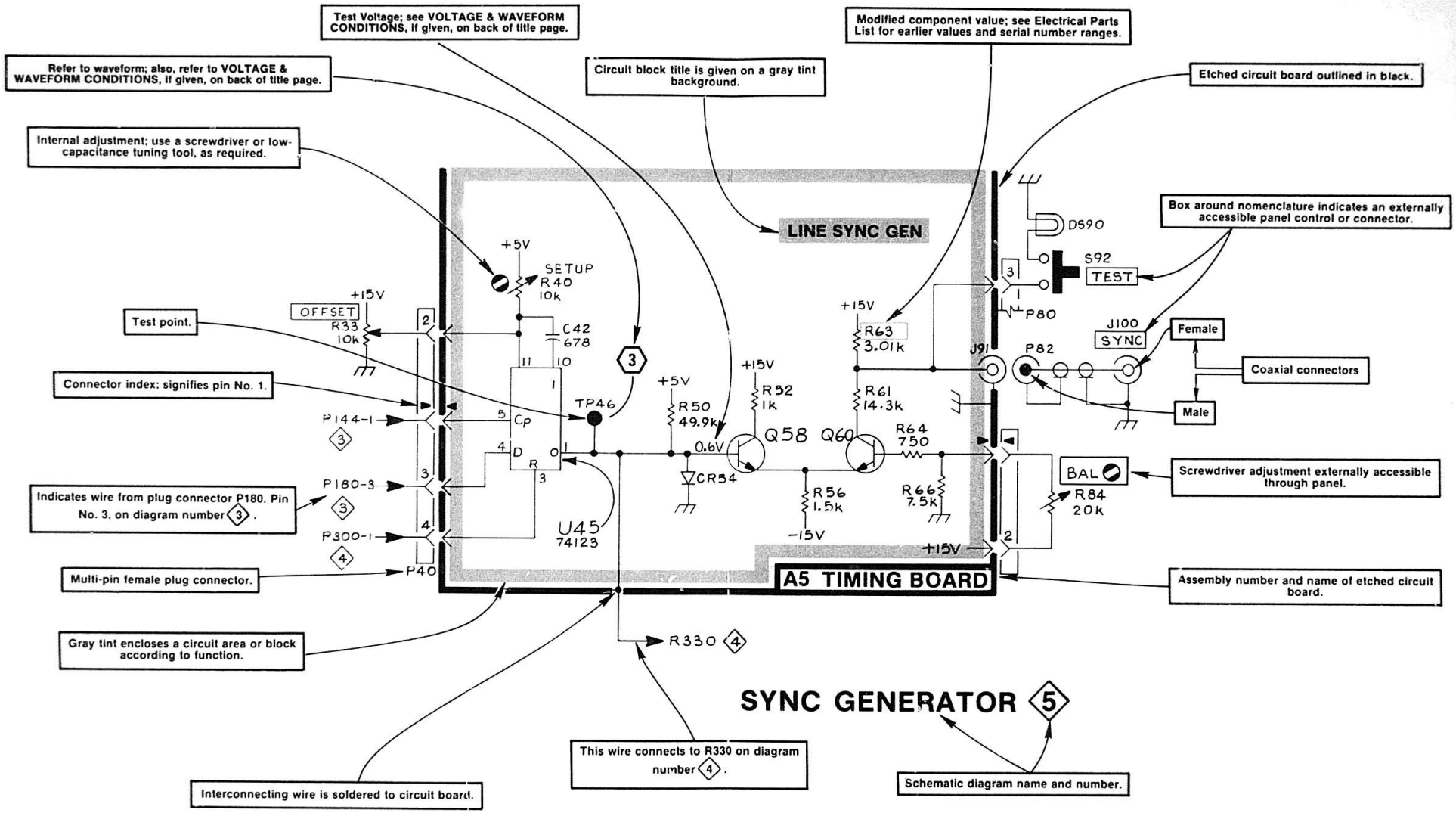

SCHEMATIC EXAMPLE

(2234)2238-50

Microfiche scan by vintageTEK - Your donations help support the museum - vintagetek.org

DIAGRAMS & CIRCUIT BOARD ILLUSTRATIONS

This section of the manual contains block and schematic diagrams with waveforms, and etched circuit board illustrations.

Symbols

Symbols used on the diagrams are based on ANSI Y32.2-1975 and IEEE No. 315 March 1971. Logic symbology is based on ANSI Y32.14-1973 (IEEE Std. 91-1973). Logic symbols depict the logic function performed and may differ from the manufacturer's data.

Component values

Electrical components shown on the diagrams are in the following units unless noted otherwise:

Capacitors = Values one or greater are in picofarads (pF).
Values less than one are in microfarads (μF).

Resistors = Ohms (Ω).

Semiconductor Types

Refer to the Replaceable Electrical Parts list.

Reference Designators

The following letters are used as reference designators to identify components or assemblies on Tektronix, Inc. schematic diagrams.

A	Assembly, separable or repairable (circuit board, etc.)
AT	Attenuator, fixed or variable
B	Motor
BT	Battery
C	Capacitor, fixed or variable
CR	Diode, signal or rectifier
DH	Decoupling Hybrid
DL	Delay Line
DS	Indicating device (lamp)
E	Spark Gap
F	Fuse
FL	Filter
H	Heat dissipating device (heat sink, heat radiator, etc.)
HR	Heater
J	Connector, stationary portion
K	Relay
L	Inductor, fixed or variable
LR	Inductor/resistor combination
M	Meter
P	Connector, movable portion
Q	Transistor, silicon-controlled rectifier, or programmable unijunction transistor
R	Resistor, fixed or variable
RT	Thermistors
S	Switch
T	Transformer
TC	Thermocouple
TP	Test Point
U	Assembly, inseparable or non-repairable (integrated circuit, etc.)
V	Electron tube
VR	Voltage regulator (zener diode, etc.)
Y	Crystal

Partial Schematic Diagram With Explanations

The partial diagram at the left is an example of the various symbols and other information provided on Tektronix, Inc. diagrams.

@

Microfiche scan by vintageTEK - Your donations help support the museum - vintagetek.org

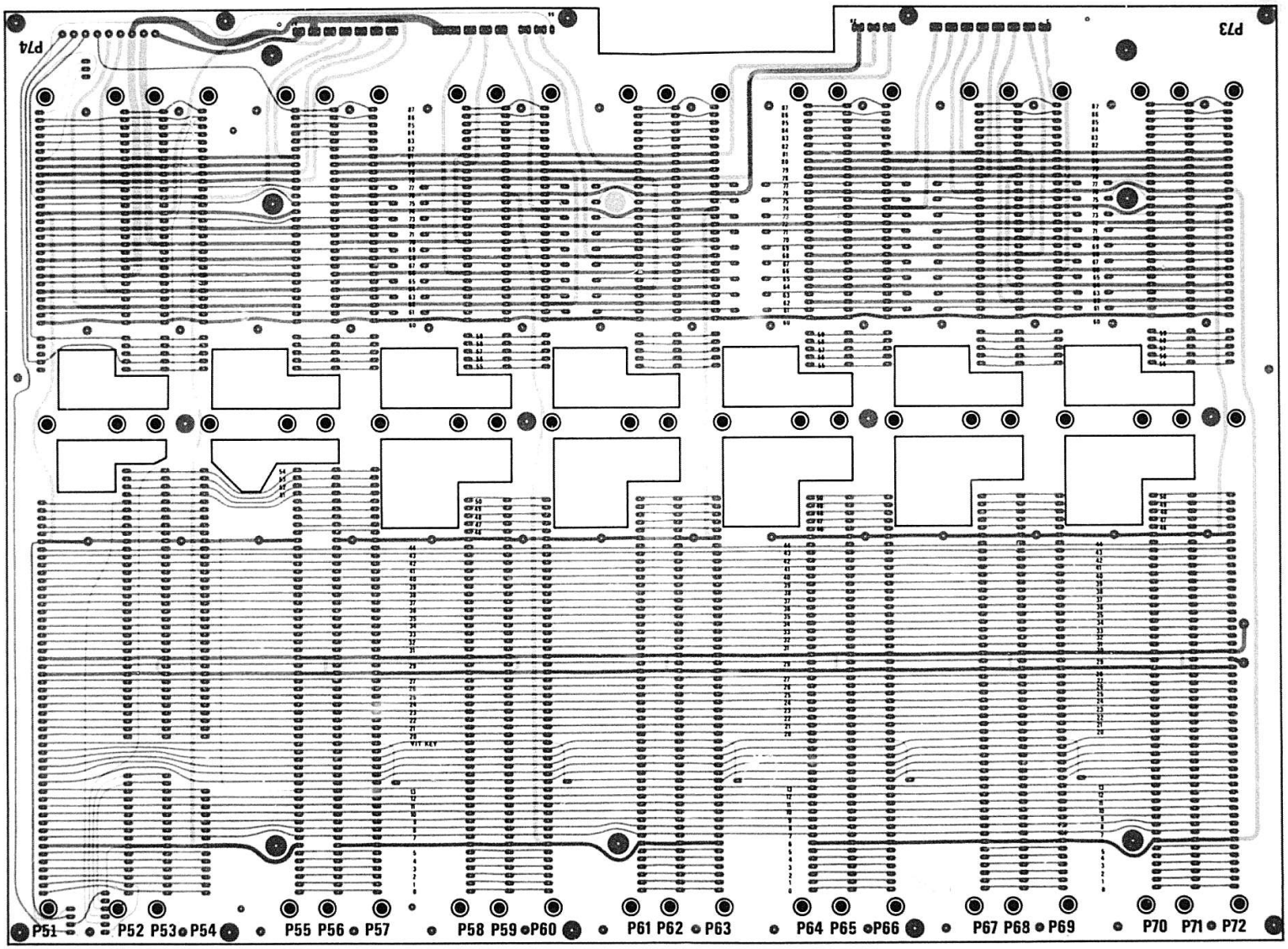

A1 INTERFACE BOARD

2322-20

Microfiche scan by vintageTEK - Your donations help support the museum - vintagetek.org

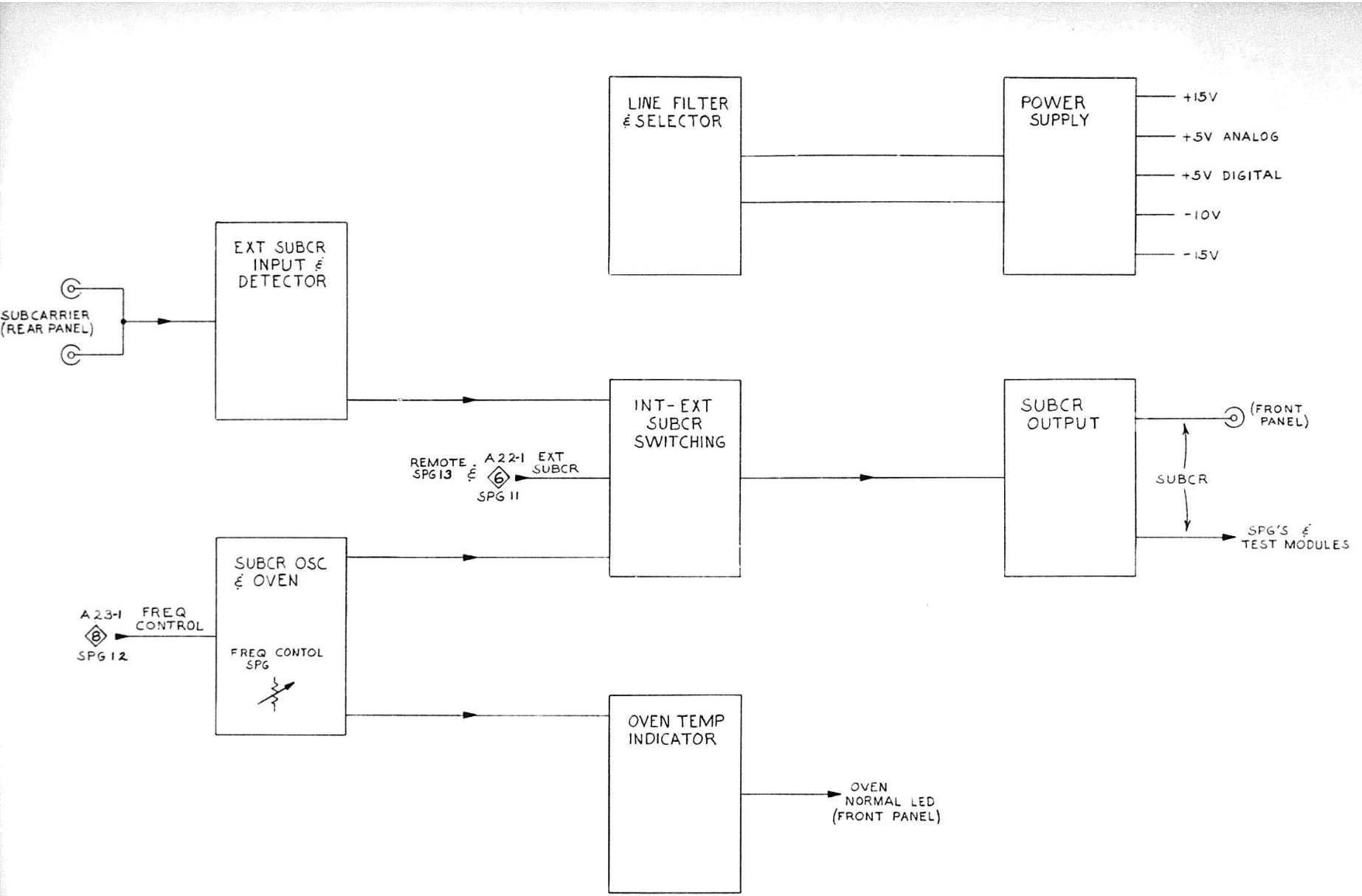

1411 @ GEM 11/77 BLOCK DIAGRAM

Block Diagram

Microfiche scan by vintageTEK - Your donations help support the museum - vintagetek.org

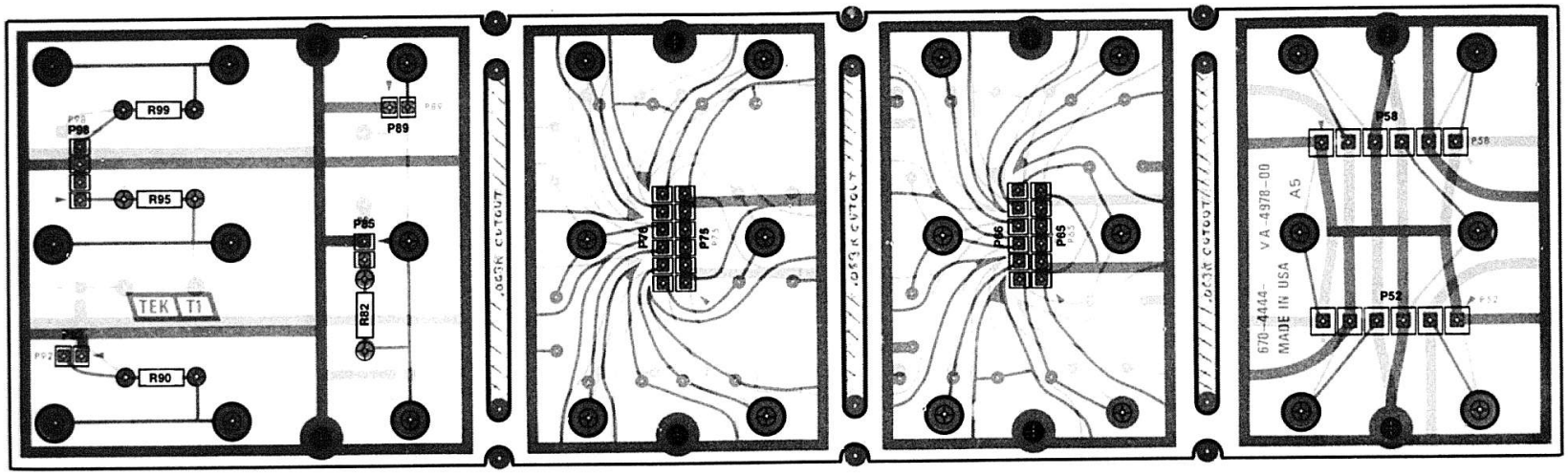

A5 REAR INTERCONNECT BOARD

TOP BOTTOM

Microfiche scan by vintageTEK - Your donations help support the museum - vintagetek.org

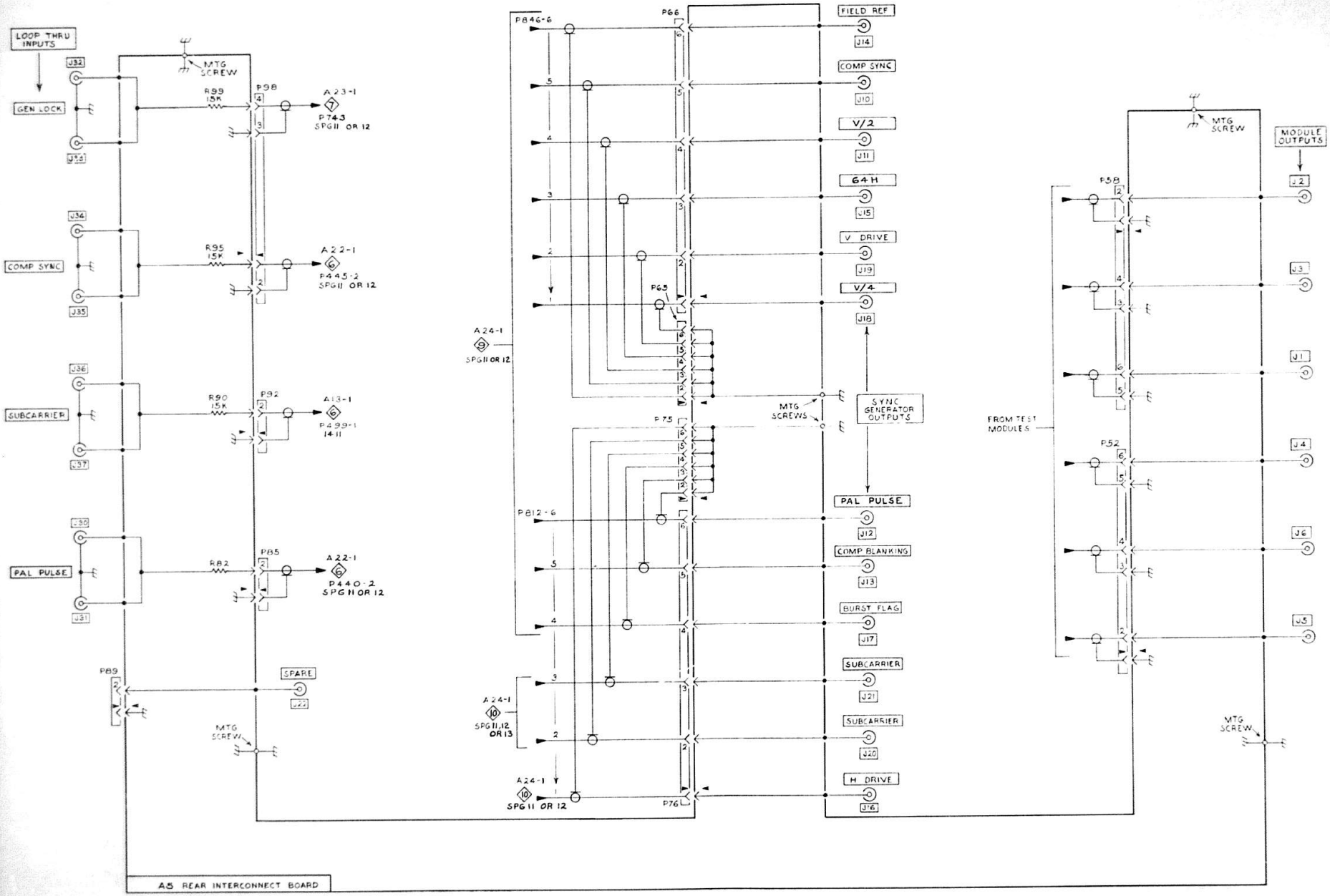

2322-26
REV A, DEC 1979

GEM 11/77

REAR INTERCONNECT BOARD ①

Microfiche scan by vintageTEK - Your donations help support the museum - vintagetek.org

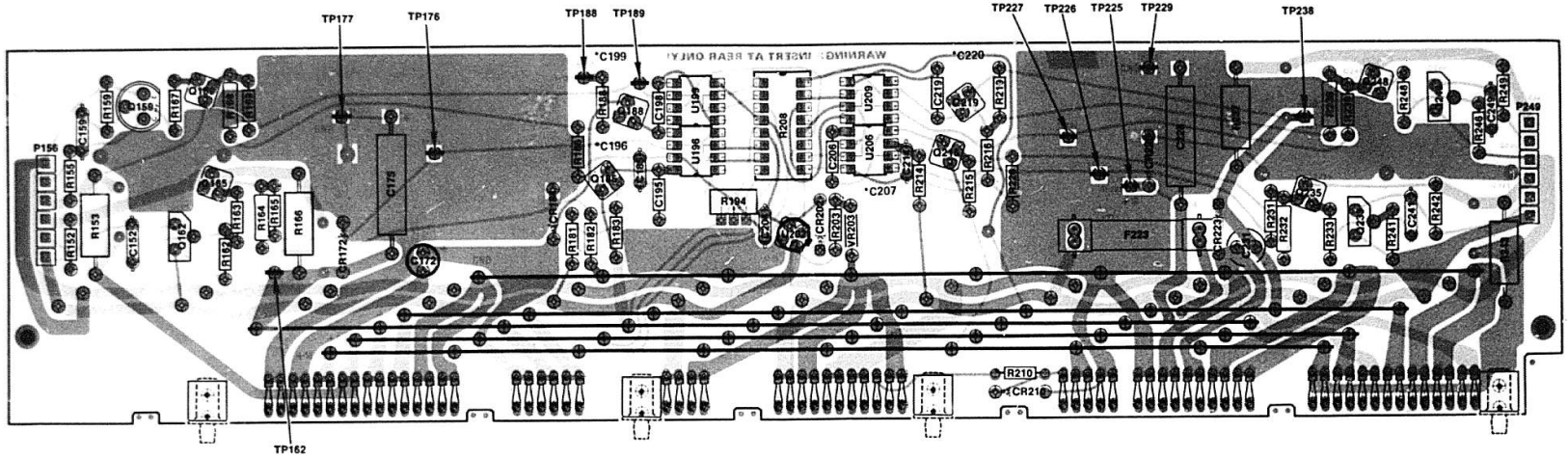

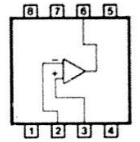

CIRCUIT NUMBERING SEQUENCE

A3 POWER SUPPLY BOARD

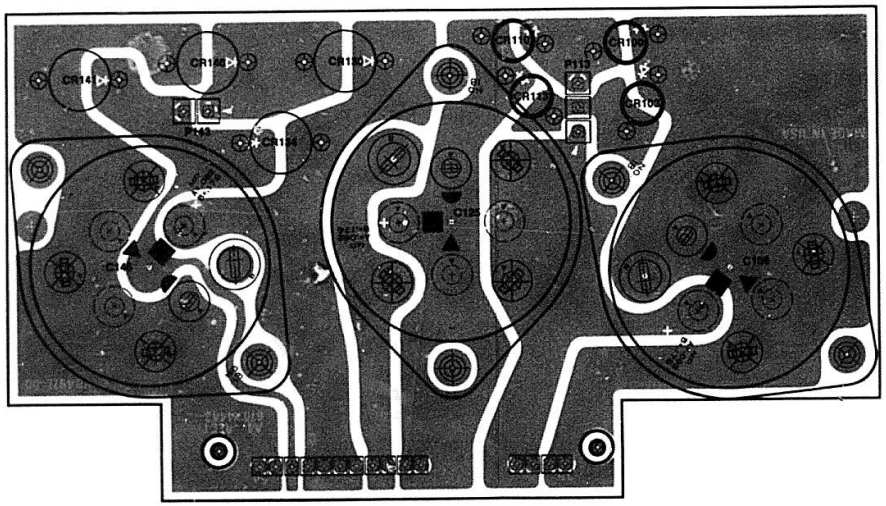

TOP BOTTOM

A4 RECTIFIER BOARD

REV A, DEC 1978 (2106) 2322-22A

Microfiche scan by vintageTEK - Your donations help support the museum - vintagetek.org

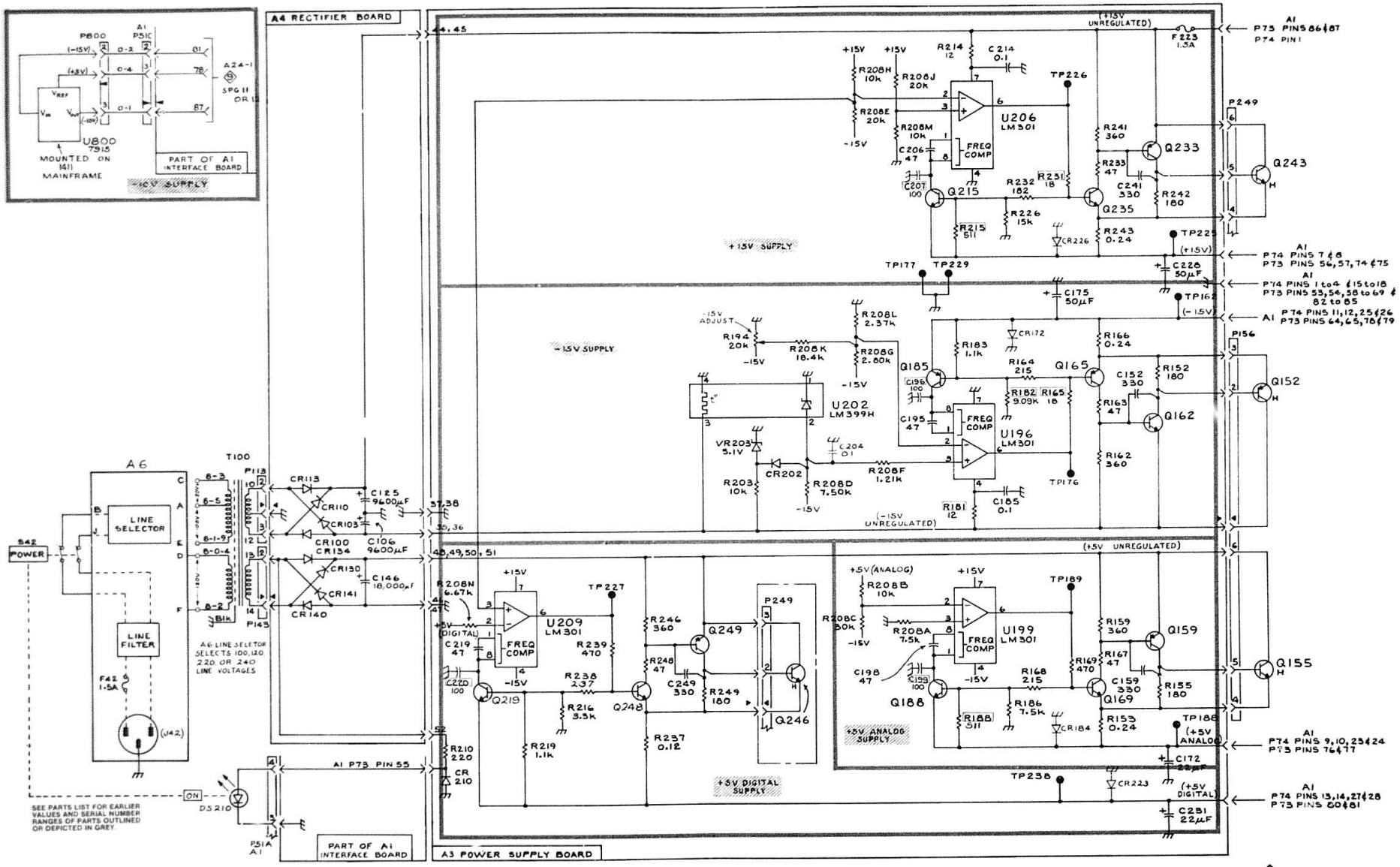

Microfiche scan by vintageTEK - Your donations help support the museum - vintagetek.org

TOP BOTTOM

741

A11
(FRONT)

(REAR)

(FRONT) A10 (REAR)

(2106) 2322-23

CIRCUIT NUMBERING SEQUENCE

A10-1 SUBCARRIER OSCILLATOR, A11-1 TEMP CONTROL, & A13 SUBCARRIER BOARDS

Microfiche scan by vintageTEK - Your donations help support the museum - vintagetek.org

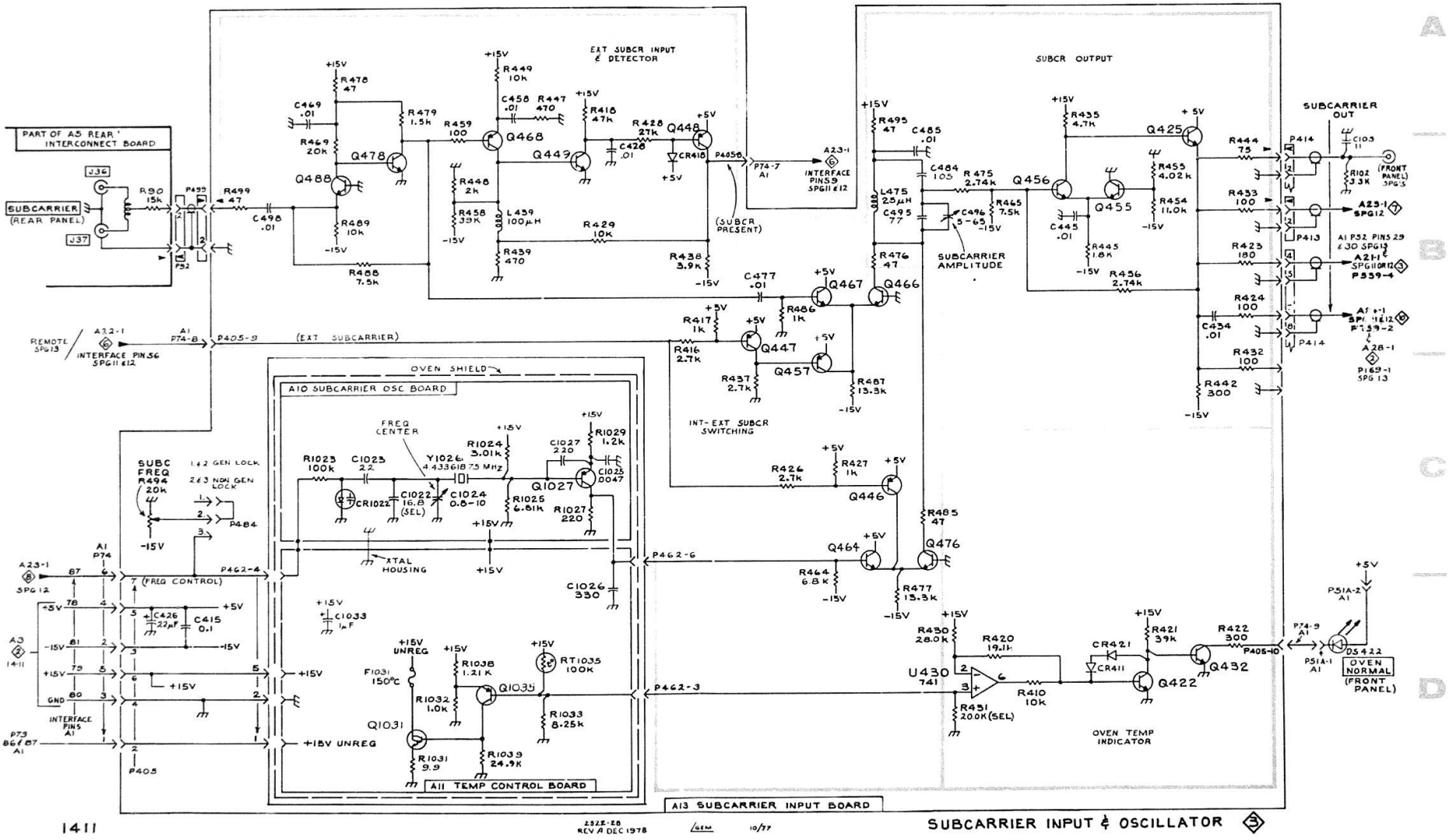

Microfiche scan by vintageTEK - Your donations help support the museum - vintagetek.org

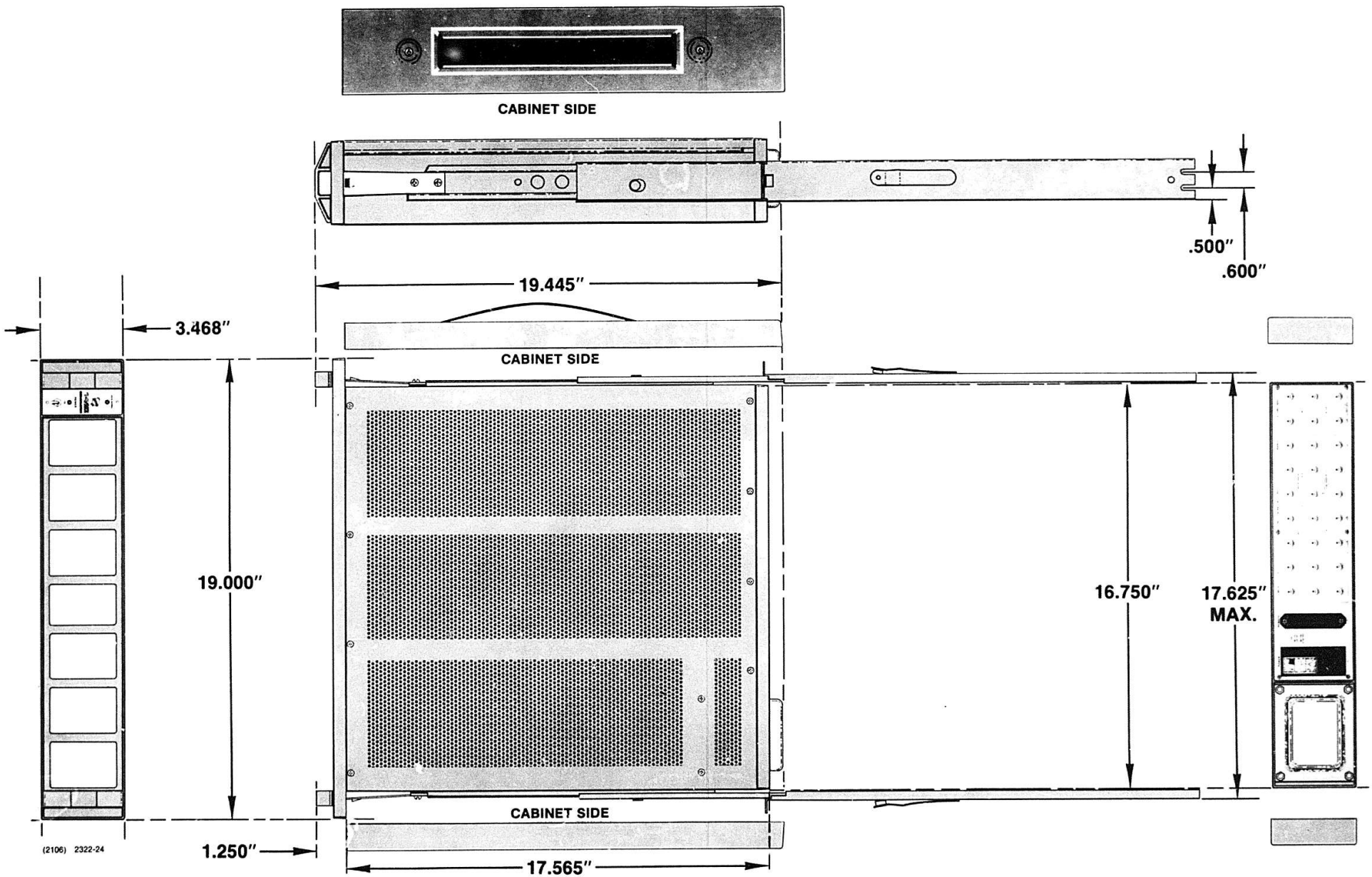

1411 RACKMOUNT & CABINET MODEL DIMENSIONAL DRAWINGS.

Microfiche scan by vintageTEK - Your donations help support the museum - vintagetek.org

Tektronix
COMMITTED TO EXCELLENCE

MANUAL CHANGE INFORMATION

Group Code 20

Date: 4/9/91 Change Reference: M75054

Product: 1410, 1411, 1412 Manual Part No: See List

DESCRIPTION

INST	EFF S/N	MANUAL P/N
1410	B041461	070-2759-00
1411	B033982	070-2322-00
1412	B020206	070-2323-00

MECHANICAL PARTS LIST CHANGE

REPLACEABLE MECHANICAL PARTS

CHANGE TO READ:

1-59	348-0055-00	1	GROMMET,RING:GRAY ACETAL,0.207 ID X 0.280 OD

Microfiche scan by vintageTEK - Your donation help support the museum - vintagetek.org

Tektronix Television Systems

MANUAL CHANGE INFORMATION

Group Code 20

Date: 11/10/92 Change Reference: M78523

Product: See List Manual Part No: See List

DESCRIPTION

INST	EFF S/N	MANUAL P/N
1410	B041549	070–2759–00
1411	B034017	070–2322–00
1412	B020214	070–2323–00

ELECTRICAL PARTS LIST CHANGES

REPLACEABLE ELECTRICAL PARTS LIST

CHANGE TO READ:

A11	670–4063–03	CKT BD ASSY:TEMP CONTROL
Q1031	151–0405–00	TRANSISTOR, PWR:BIPOLAR,NPN,DARLINGTON,MJE800

Microfiche scan by vintageTEK - Your donations help support the museum - vintagetek.org

Tektronix

MANUAL CHANGE INFORMATION

Group Code 20

Date: 4/8/93 Change Reference: M79028

Product: See List Manual Part No: See List

DESCRIPTION

INST	EFF S/N	MANUAL P/N
1410	B041563	070-2759-00
1411	B034031	070-2322-00
1412	B020217	070-2323-00

MECHANICAL PARTS LIST CHANGES

In the 1410, **CHANGE TO READ:**

1–3	333–2158–04	1	PANEL,FRONT:POWER (ATTACHING PARTS)
–4	211–0118–00	2	SCREW,MACHINE:2-56 X 0.25,PNH,STL;BLACK OXD,POZ (END ATTACHING PARTS)
–5	333–2171–01	3	PANEL,BLANK:1410,BLANK,SINGLE (ATTACHING PARTS)
–6	211–0118–00	6	SCREW,MACHINE:2-56 X 0.25,PNH,STL;BLACK OXD,POZ (END ATTACHING PARTS)
–7	333–2171–01	1	PANEL,BLANK:1410,BLANK,SINGLE (ATTACHING PARTS)
–8	211–0118–00	2	SCREW,MACHINE:2-56 X 0.25,PNH,STL;BLACK OXD,POZ (END ATTACHING PARTS)

In the 1411, **CHANGE TO READ:**

1–6	333–2259–02	1	PANEL,FRONT:POWER (ATTACHING PARTS)
–7	211–0118–00	2	SCREW,MACHINE:2-56 X 0.25,PNH,STL;BLACK OXD,POZ (END ATTACHING PARTS)
–20	333–2171–01	4	PANEL,BLANK:1410,BLANK,SINGLE (ATTACHING PARTS)
–21	211–0118–00	8	SCREW,MACHINE:2-56 X 0.25,PNH,STL;BLACK OXD,POZ (END ATTACHING PARTS)

In the 1412, **CHANGE TO READ:**

1–6	333–2295–01	1	PANEL,FRONT:POWER (ATTACHING PARTS)
–7	211–0118–00	2	SCREW,MACHINE:2-56 X 0.25,PNH,STL;BLACK OXD,POZ (END ATTACHING PARTS)
–20	333–2171–01	4	PANEL,BLANK:1410,BLANK,SINGLE (ATTACHING PARTS)
–21	211–0118–00	8	SCREW,MACHINE:2-56 X 0.25,PNH,STL;BLACK OXD,POZ (END ATTACHING PARTS)

Microfiche scan by vintageTEK - Your donations help support the museum - vintagetek.org