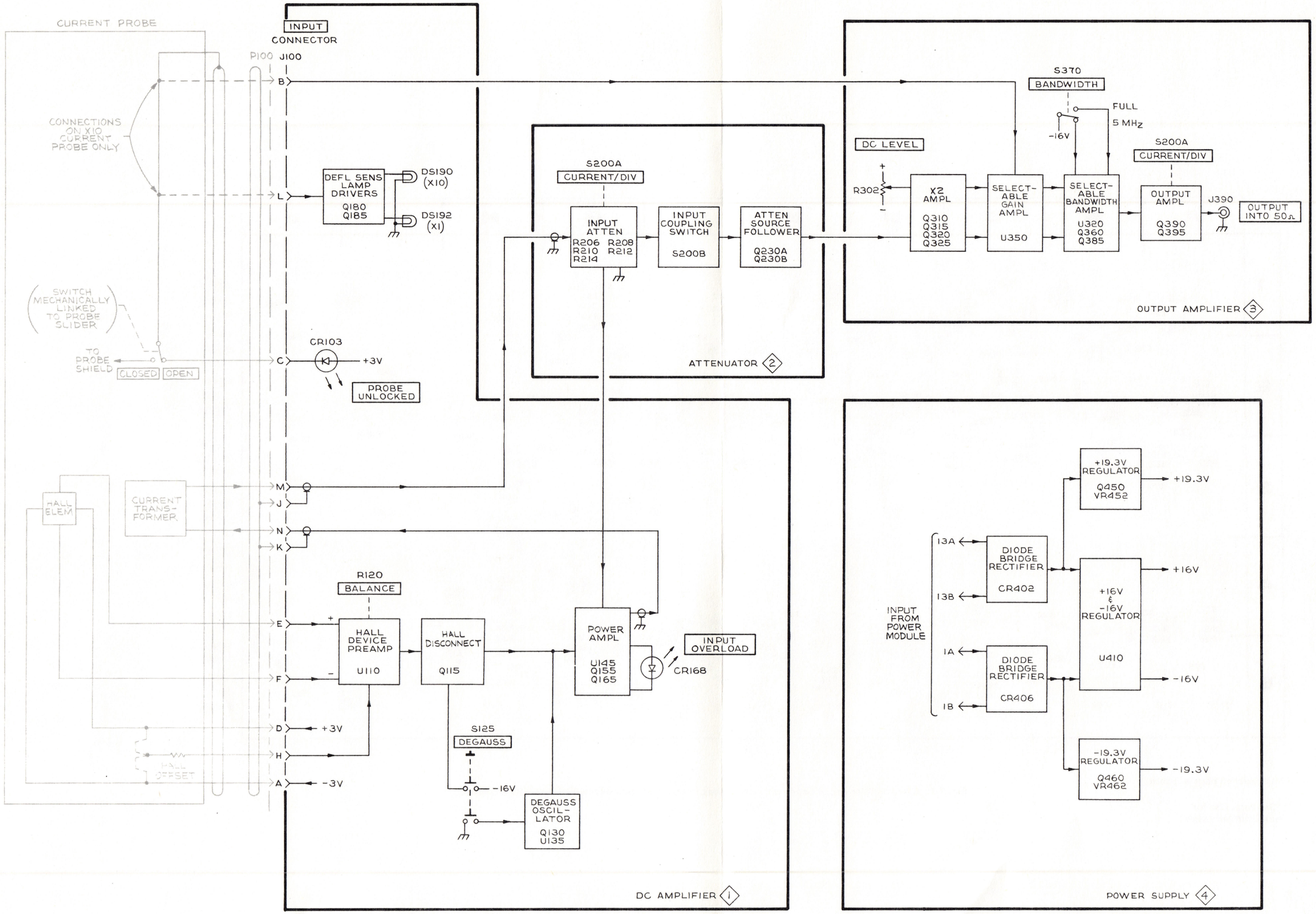

AM503

2052-32
REV. B, OCT. 1979

BLOCK DIAGRAM

Scan by vintageTEK - Your donations help support the museum - vintagetek.org

AMPLIFIER BOARD
COMPONENT LOCATIONS
SN B030830 & ABOVE

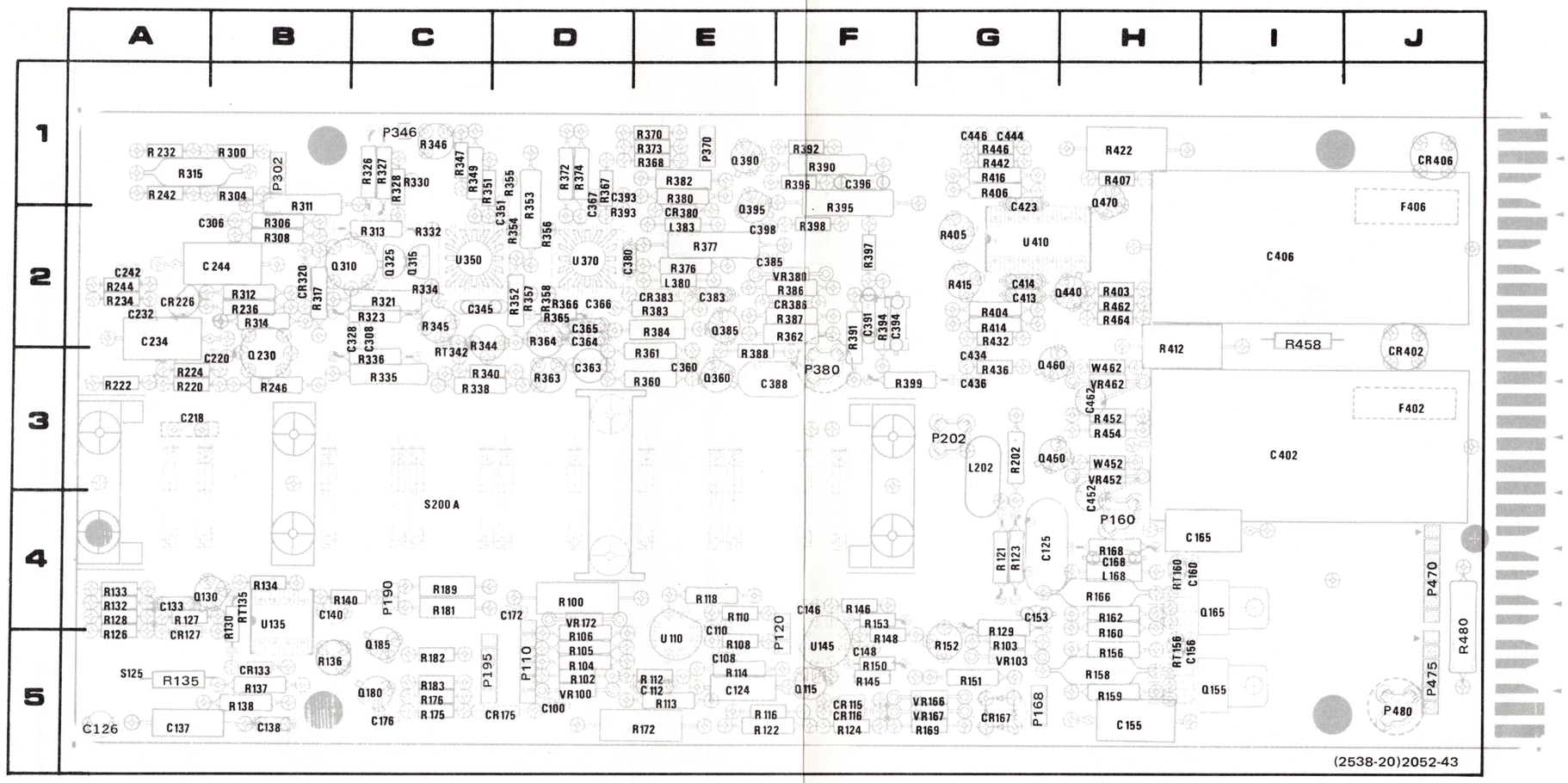

† Located on back of board

*See Parts List for serial number ranges.

Fig. 7-1. A1—Amplifier circuit board with component locations of components (SN B030830 & above).

Scan by vintageTEK - Your donations help support the museum - vintagetek.org

CKT NO	GRID LOC	CKT NO	GRID LOC	CKT NO	GRID LOC	CKT NO	GRID LOC	CKT NO	GRID LOC
C100	5D	CR133	5B	R112	5E	R314	2B	R404	2G
C108	5E	CR167	5G	R113	5E	R315	1A	R405	2G
C110	4E	CR175	5D	R114	5E	R317	2B	R406	1G
C112	5E	CR226	2A	R116	5E	R321	2C	R407	1H
C124	5E	CR320	2B	R118	4E	R323	2C	R412	3H
C125	4G	CR380	2E	R121	4G	R326	1C	R414	2G
C133	4A	CR383	2E	R122	5E	R327	1C	R415	2G
C137	5A	CR386	2F	R123	4G	R328	1C	R416	1G
C138	5B	CR402	3J	R124	5F	R330	1C	R422	1H
C140	4B	CR406	1J	R126	5A	R332	2C	R432	2G
C146	4F			R127	4A	R334	2C	R436	3G
C148	5F	F402 †	3J	R128	4A	R335	3C	R442	1G
C153	4G	F406 †	1J	R129	5G	R336	3C	R446	1G
C155	5H			R130	4B	R338	3C	R452	3H
C156	5H	L168	4H	R132	4A	R340	3C	R454	3H
C160	4H	L202	3G	R133	4A	R344	2C	R458 *	3I
C165	4I	L380	2E	R134	4B	R345	2C	R462	2H
C168	4H	L383	2E	R135 *	5A	R346	1C	R464	2H
C172	4D			R136	5B	R347	1C	R480	5J
C176	5C	P110	5D	R137	5B	R349	1C	RT135	4B
C218 †	3A	P120	5F	R138	5B	R351	1C	RT156	5H
C220	3B	P160	4H	R140	4B	R352	2D	RT160	4H
C232	2A	P168	5G	R145	5F	R353	1D	RT342	3C
C234	2A	P190	4C	R146	4F	R354	2D		
C242	2A	P195	5C	R148	5F	R355	1D	S125	5A
C244	2B	P202	3G	R150	5F	R356	2D	S200A	4C
C306	2B	P302	1B	R151	5G	R357	2D		
C308	2C	P346	1C	R152	5G	R358	2C	U110	5E
C328	2C	P370	1E	R153	4F	R360	3E	U135	4B
C345	2C	P380 †	3F	R156	5H	R361	3E	U145	5F
C351	2D	P470	4J	R158	5H	R362	2F	U350	2C
C360	3E	P475	5J	R159	5H	R363	3D	U370	2D
C363	3D	P480 †	5J	R160	5H	R364	2D	U410	2G
C364	2D			R162	4H	R365	2D		
C365	2D	Q115	5F	R166	4H	R366	2D	VR100	5D
C366	2D	Q130	4A	R168	4H	R367	1D	VR103	5G
C367	1D	Q155	5I	R169	5G	R368	1E	VR166	5G
C380	2D	Q165	4I	R172	5E	R370	1E	VR167 *	5G
C383	2E	Q180	5C	R175	5C	R372	1D	VR172	4D
C385	2E	Q185	5C	R176	5C	R373	1E	VR380	2F
C388	3E	Q230	3B	R181	4C	R374	1D	VR452	3H
C391	2F	Q310	2B	R182	5C	R376	2E	VR462	3H
C393	1D	Q315	2C	R183	5C	R377	2E		
C394	2F	Q325	2C	R189	4C	R380	1E	W452 *	3H
C396	1F	Q360	3E	R202	3G	R382	1E	W462 *	3H
C398	2E	Q385	2E	R220	3A	R383	2E		
C402	3I	Q390	1E	R222	3A	R384	2E		
C406	2I	Q395	2E	R224	3A	R386	2F		
C413	2G	Q440	2H	R232	1A	R387	2F		
C414	2G	Q450	3G	R234	2A	R388	3E		
C423	2G	Q460	3G	R236	2B	R390	1F		
C434	3G	Q470	1H	R242	1A	R391	2F		
C436	3G			R244	2A	R392	1F		
C444	1G	R100	4D	R246	3B	R393	2D		
C446	1G	R102	5D	R300	1B	R394	2F		
C452	4H	R103	5G	R304	1B	R395	2F		
C462	3H	R104	5D	R306	2B	R396	1F		
		R105	5D	R308	2B	R397	2F		
CR115	5F	R106	5D	R311	2B	R398	2F		
CR116	5F	R108	5E	R312	2B	R399	3F		
CR127	5A	R110	4E	R313	2C	R403	2H		

Scan by vintageTEK - Your donations help support the museum - vintagetek.org

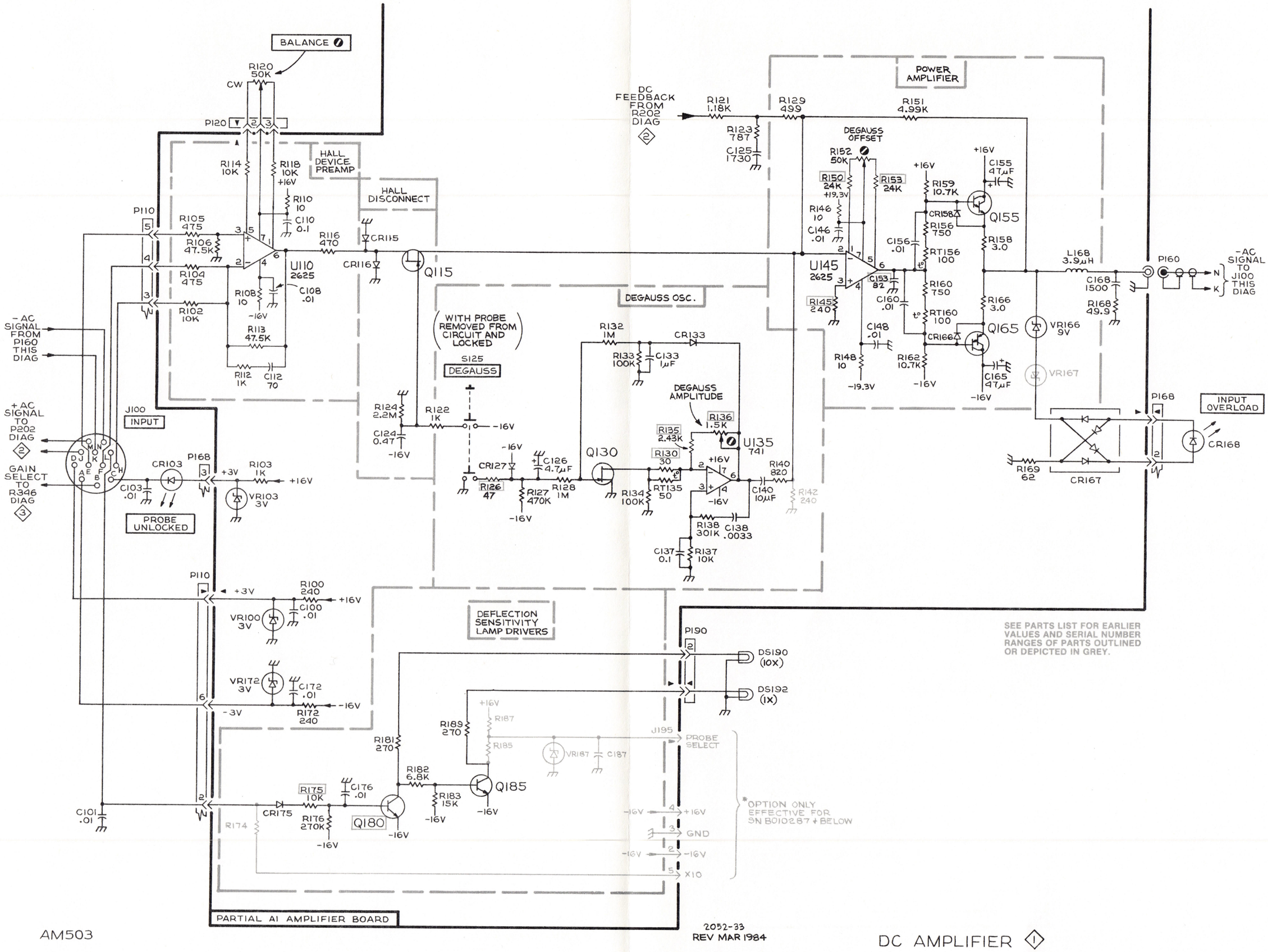

Scan by vintageTEK - Your donations help support the museum - vintagetek.org

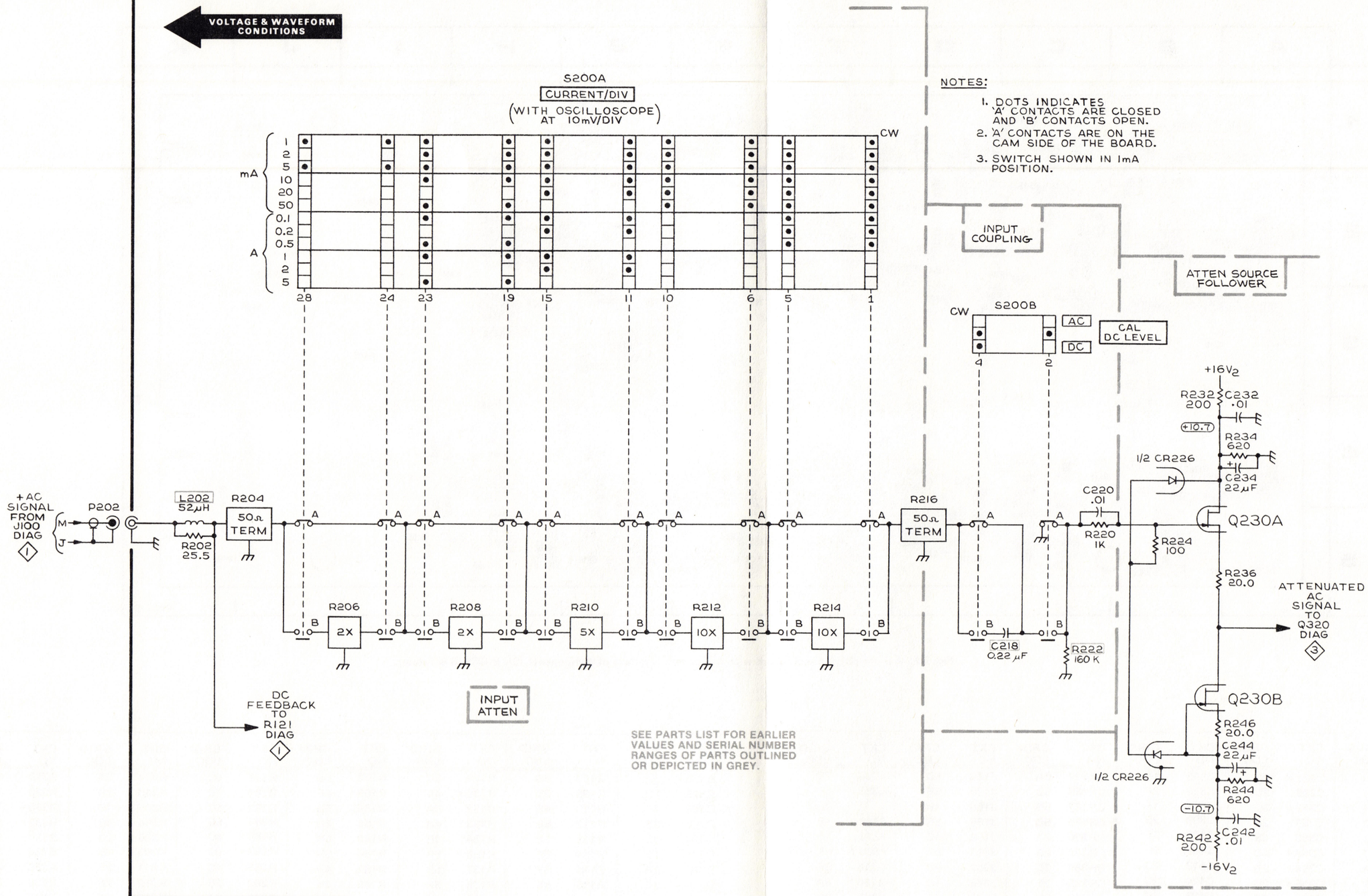

AM 503

2052-34
REV. C, OCT. 1979

ATTENUATOR 2

ATTENUATOR 2

Scan by vintageTEK - Your donations help support the museum - vintagetek.org

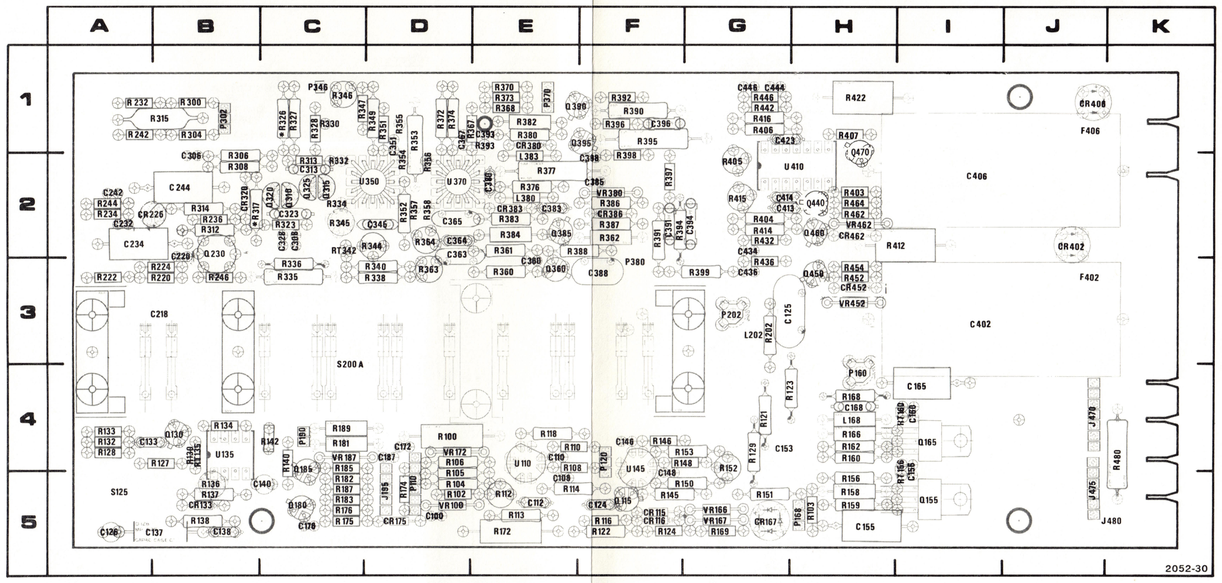

*See Parts List for serial number ranges.

† Located on back of board

Fig. 7-2. A1—Amplifier circuit board with component locations of components (SN B030829 & below).

CKT NO	GRID LOC	CKT NO	GRID LOC	CKT NO	GRID LOC	CKT NO	GRID LOC	CKT NO	GRID LOC	CKT NO	GRID LOC	CKT NO	GRID LOC
C100	5D	C160	4H	C323 *	2C	C393	1D	CR127	5A	J110	5D	L380	2E
C108	5E	C165	4I	C328	2C	C394	2F	CR133	5B	J120	5F	L383	2E
C110	4E	C168	4H	C345 *	2C	C396	1F	CR167	5G	J160	4H		
C112	5E	C172	4D	C351	2D	C398	2E	CR175	5D	J168	5G	P302	1B
C124	5E	C176	5C	C360	3E	C402	3I	CR226	2A	J190	4C	P370	1E
C125	4G	C187 *	4D	C363 *	3D	C406	2I	CR320	2B	J195	5C	P380 †	3F
C133	4A	C218 * †	3A	C364 *	2D	C413	2G	CR380	2E	J202	3G	Q115	5F
C137	5A	C220	3B	C365 *	2D	C414	2G	CR383	2E	J346	1C	Q130	4A
C138	5B	C232	2A	C366	2D	C423	2G	CR386	2F	J380	3F	Q155	5I
C140	4B	C234	2A	C367	1D	C434	3G	CR402	3J	J470	4J	Q165	4I
C146	4F	C242	2A	C380	2D	C436	3G	CR406	1J	J475	5J	Q180	5C
C148	5F	C244	2B	C383	2E	C444	1G			J480	5J	Q185	5C
C153 *	4G	C306	2B	C385	2E	C446	1G	F402 * †	3J			Q230	3B
C155	5H	C308	2C	C388	3E	CR115	5F	F406 * †	1J	L168	4H	Q310 *	2C
C156	5H	C313 *	2C	C391	2F	CR116	5F			L202	3G	Q315	2C

CKT NO	GRID LOC	CKT NO	GRID LOC	CKT NO	GRID LOC	CKT NO	GRID LOC	CKT NO	GRID LOC	CKT NO	GRID LOC	CKT NO	GRID LOC
Q320 *	2C	R106	5D	R129	5G	R152	5G	R176	5C	R244	2A	R327	1C
Q325	2C	R108	5E	R130 *	4B	R153 *	4F	R181	4C	R246	3B	R328	1C
Q360	3E	R110	4E	R132	4A	R156	5H	R182	5C	R300	1B	R330 *	1C
Q385	2E	R112	5E	R133	4A	R158	5H	R183	5C	R304	1B	R332 *	2C
Q390	1E	R113	5E	R134	4B	R159	5H	R185 *	4C	R306 *	2B	R334 *	2C
Q395	2E	R114	5E	R136	5B	R160	5H	R187 *	5C	R308 *	2B	R335	3C
Q440 *	2H	R116	5E	R137	5B	R162	4H	R189	4C	R311	2B	R336	3C
Q450	3G	R118	4E	R138	5B	R166	4H	R202	3G	R312	2B	R338	3C
Q460	3G	R121	4G	R140	4B	R168	4H	R220 *	3A	R313 *	2C	R340	3C
Q470 *	1H	R122	5E	R142 *	4B	R169	5G	R222	3A	R314	2B	R344	2C
R100	4D	R123	4G	R145 *	5F	R172	5E	R224	3A	R315	1A	R345	2C
R102	5D	R124	5F	R146	4F	R174 *	5D	R232	1A	R317 *	2B	R346	1C
R103	5G	R126	5A	R148	5F	R175	5C	R234	2A	R321	2C	R347	1C
R104	5D	R127	4A	R150 *	5F			R236	2B	R323 *	2C	R349	1C
R105	5D	R128	4A	R151	5G			R242	1A	R326 *	1C	R351	1C

CKT NO	GRID LOC	CKT NO	GRID LOC	CKT NO	GRID LOC	CKT NO	GRID LOC	CKT NO	GRID LOC	CKT NO	GRID LOC
R352	2D	R368	1E	R391 *	2F	R414	2G	RT160	4H	VR103	5G
R353	1D	R370	1E	R392	1F	R415	2G	RT342	3C	VR166	5G
R354	2D	R372	1D	R393	2D	R416	1G	RT135	4B	VR167	5G
R355	1D	R373	1E	R394	2F	R422 *	1H			VR172	4D
R356	2D	R374	1D	R395	2F	R432	2G	S125	5A	VR187 *	4C
R357	2D	R376	2E	R396	1F	R436	3G	S200A	4C	VR380	2F
R358	2C	R377	2E	R397	2F	R442	1G			VR452 *	3H
R360	3E	R380	1E	R398	2F	R446	1G	U110	5E	VR462 *	3H
R361	3E	R382	1E	R399	3F	R452	3H	U135	4B		
R362	2F	R383	2E	R403	2H	R454 *	3H	U145	5F		
R363 *	3D	R384	2E	R404	2G	R462	2H	U350 *	2C		
R364	2D	R386	2F	R405	2G	R464 *	2H	U370 *	2D		
R365	2D	R387	2F	R406	1G	R480	5J	U410	2G		
R366	2D	R388	3E	R407	1H						
R367	1D	R390	1F	R412 *	3H	RT156	5H	VR100	5D		

AMPLIFIER BOARD
COMPONENT LOCATIONS
SN B030829 & BELOW

@ OCT 1979
Scan by vintageTEK - Your donations help support the museum - vintagetek.org

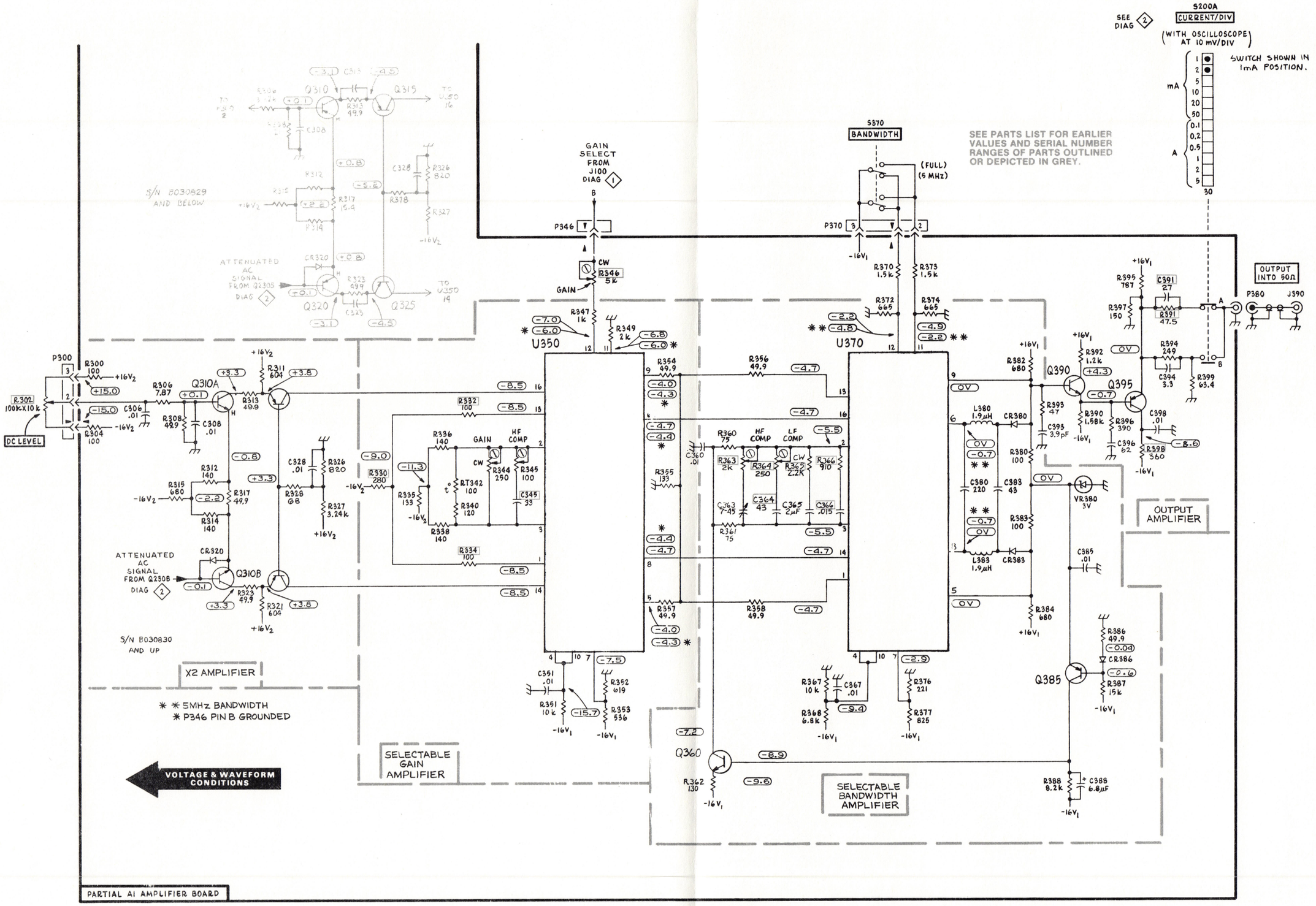

Scan by vintageTEK - Your donations help support the museum - vintagetek.org

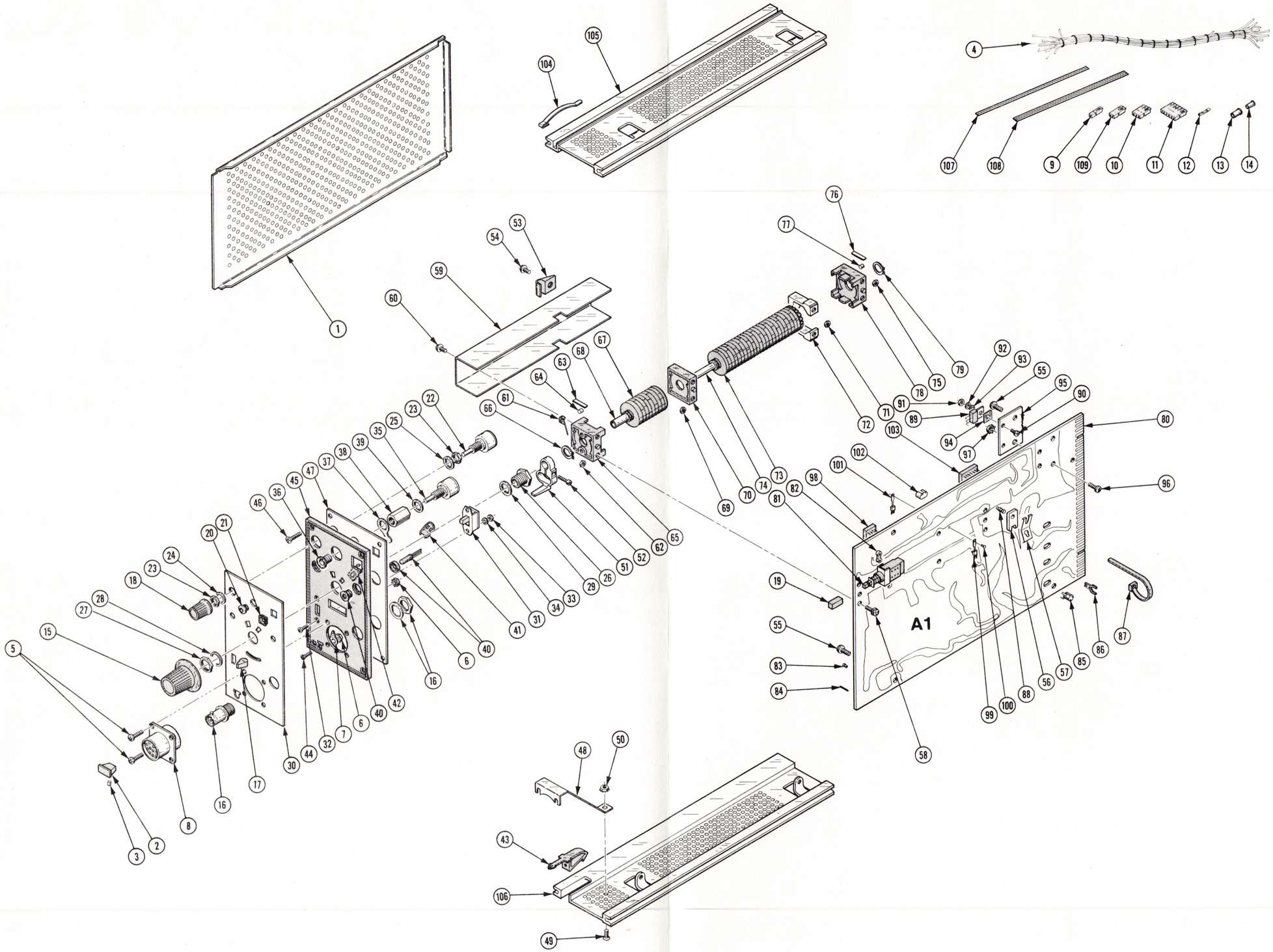

FIG. 1 EXPLODED

Scan by vintageTEK - Your donations help support the museum - vintagetek.org