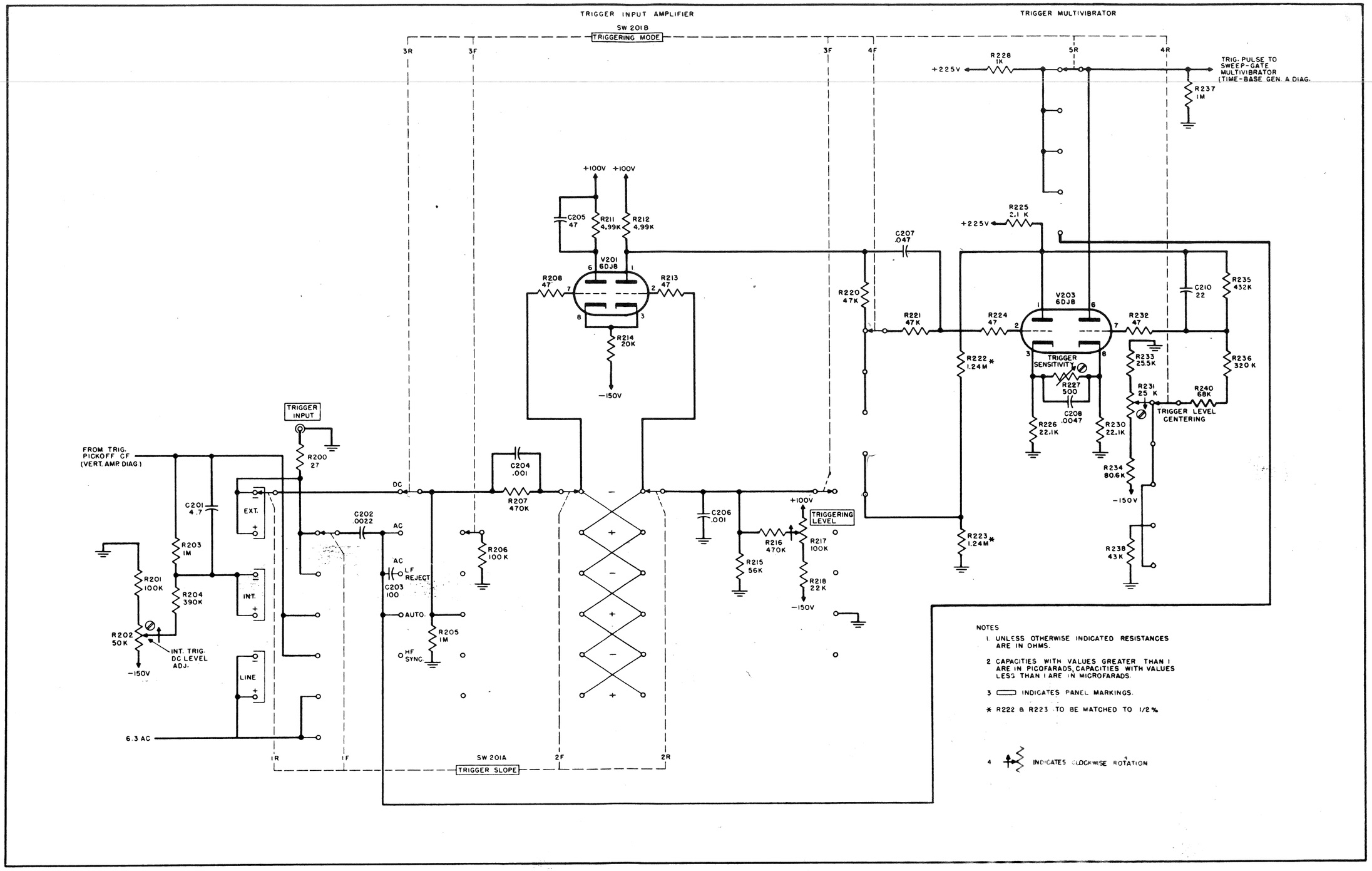

Figure 1-22. Time Base A Trigger, Schematic Diagram.

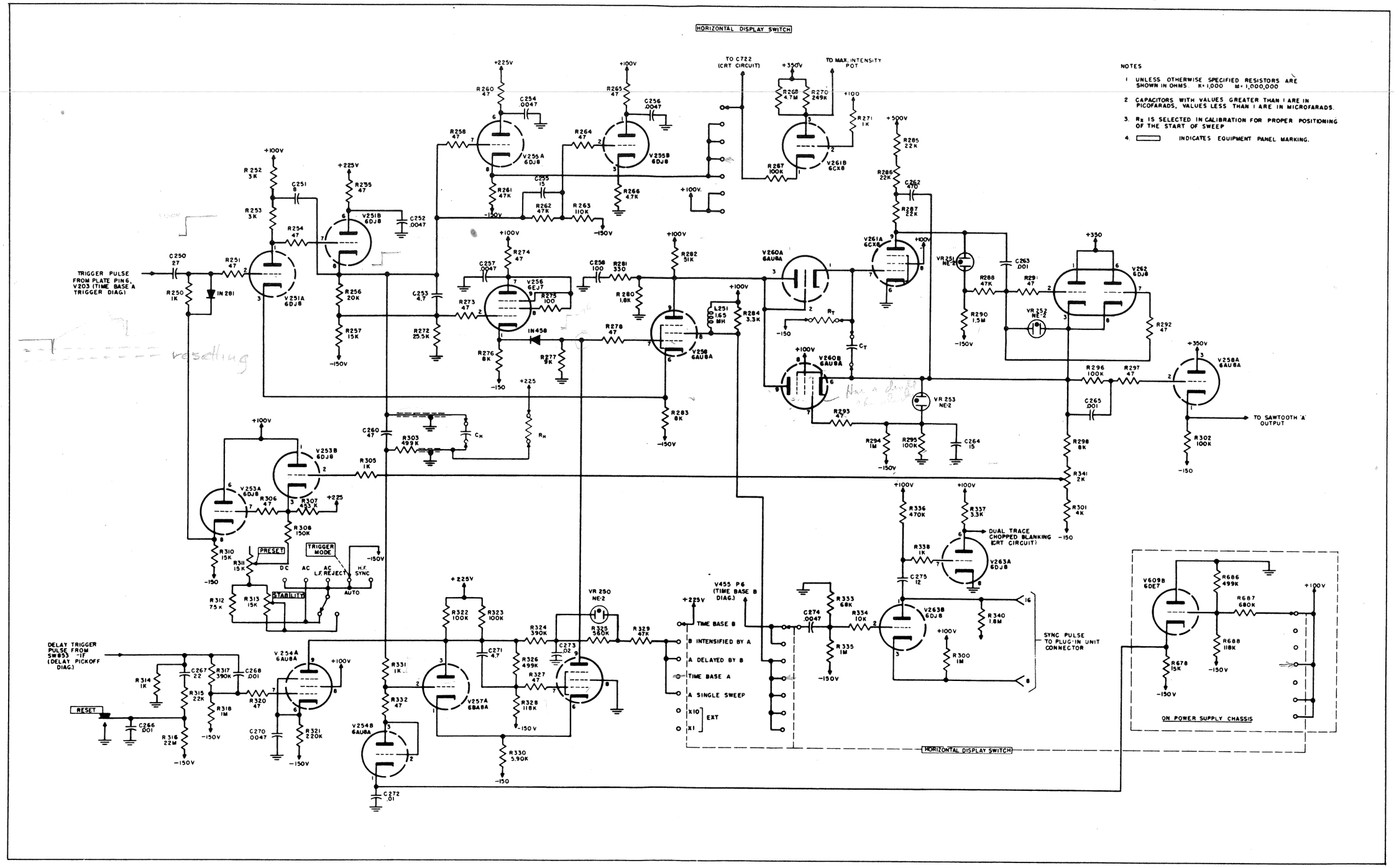

Figure 1-23. Time Base Generator A, Schematic Diagram.

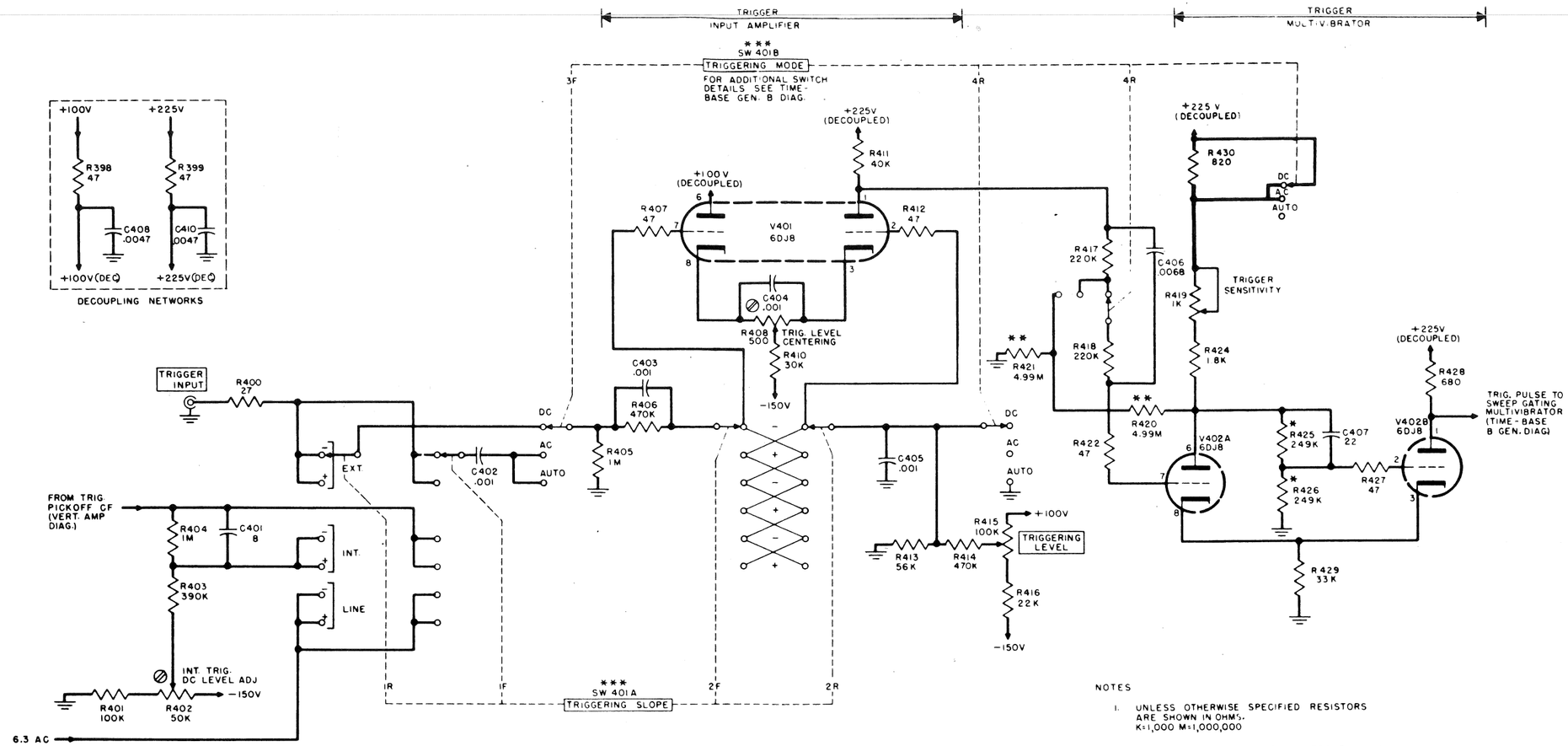

NOTES

1. UNLESS OTHERWISE SPECIFIED RESISTORS ARE SHOWN IN OHMS. K=1,000 M=1,000,000
2. CAPACITORS WITH VALUES GREATER THAN 1.0 ARE IN PICOFARADS, VALUES LESS THAN 1.0 ARE IN MICROFARADS.
3. ▭ INDICATES EQUIPMENT PANEL MARKING.
4. *** SW 401A & SW 401B ARE CONCENTRIC CONTROLS
5. ** RESISTORS MATCHED TO 1/2%
6. * RESISTORS MATCHED TO 1/2%

Figure 1-24. Time Base B Trigger, Schematic Diagram.

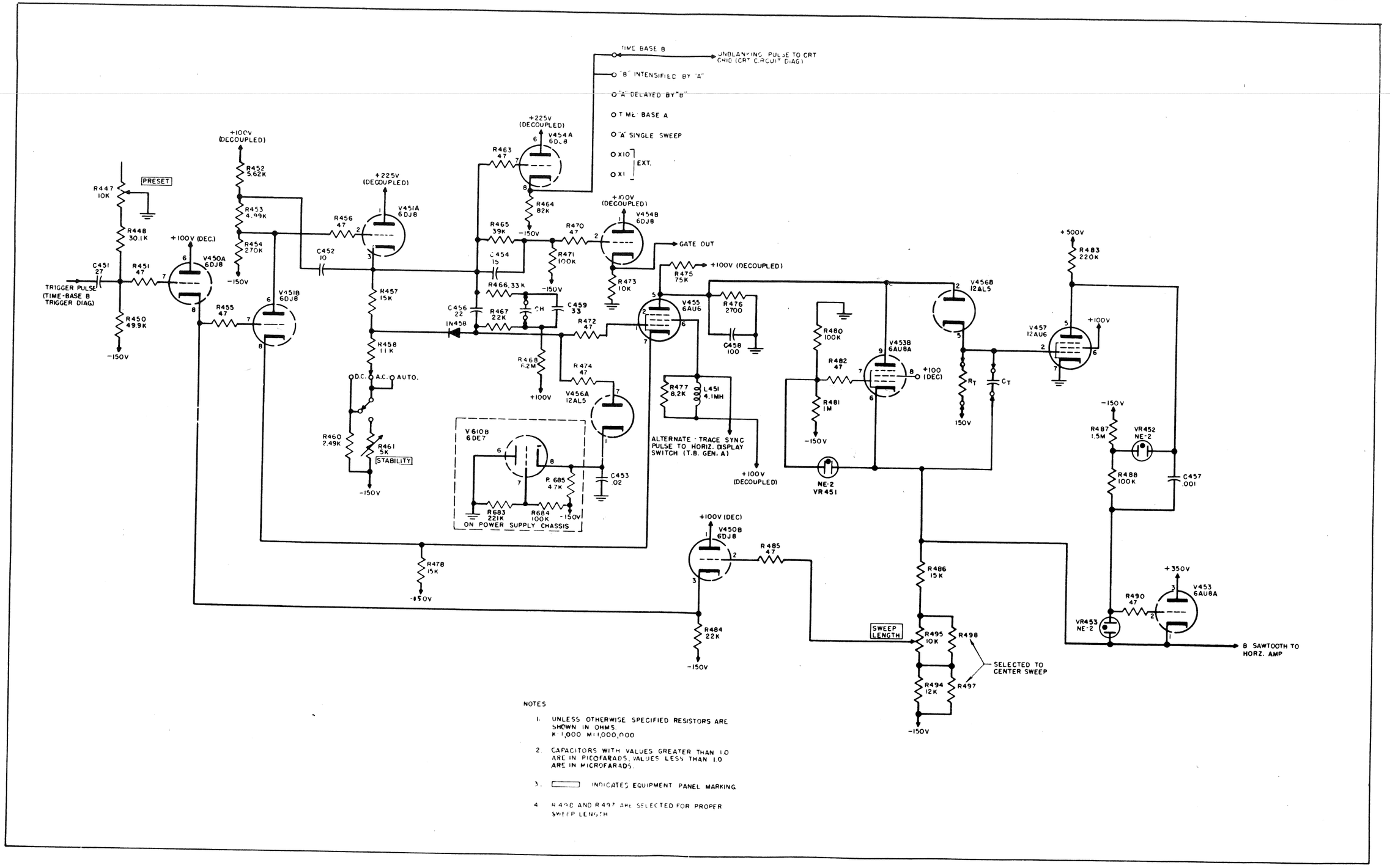

NOTES

1. UNLESS OTHERWISE SPECIFIED RESISTORS ARE SHOWN IN OHMS. K=1,000 M=1,000,000
2. CAPACITORS WITH VALUES GREATER THAN 1.0 ARE IN PICOFARADS. VALUES LESS THAN 1.0 ARE IN MICROFARADS.
3. ▭ INDICATES EQUIPMENT PANEL MARKING.
4. R498 AND R497 ARE SELECTED FOR PROPER SWEEP LENGTH

Figure 1-25. Time Base Generator B, Schematic Diagram.

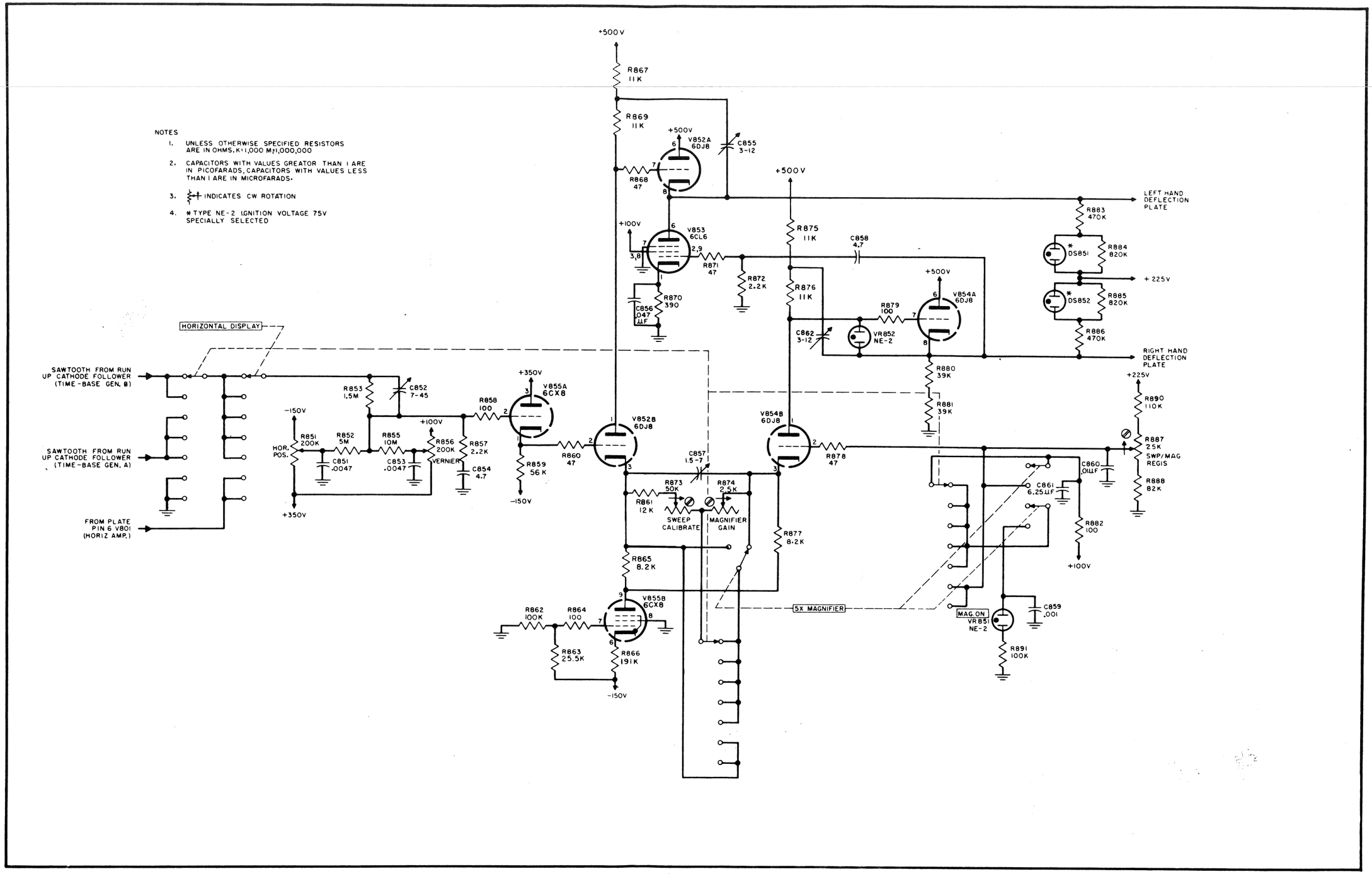

Figure 1-26. Horizontal Amplifier, Schematic Diagram.

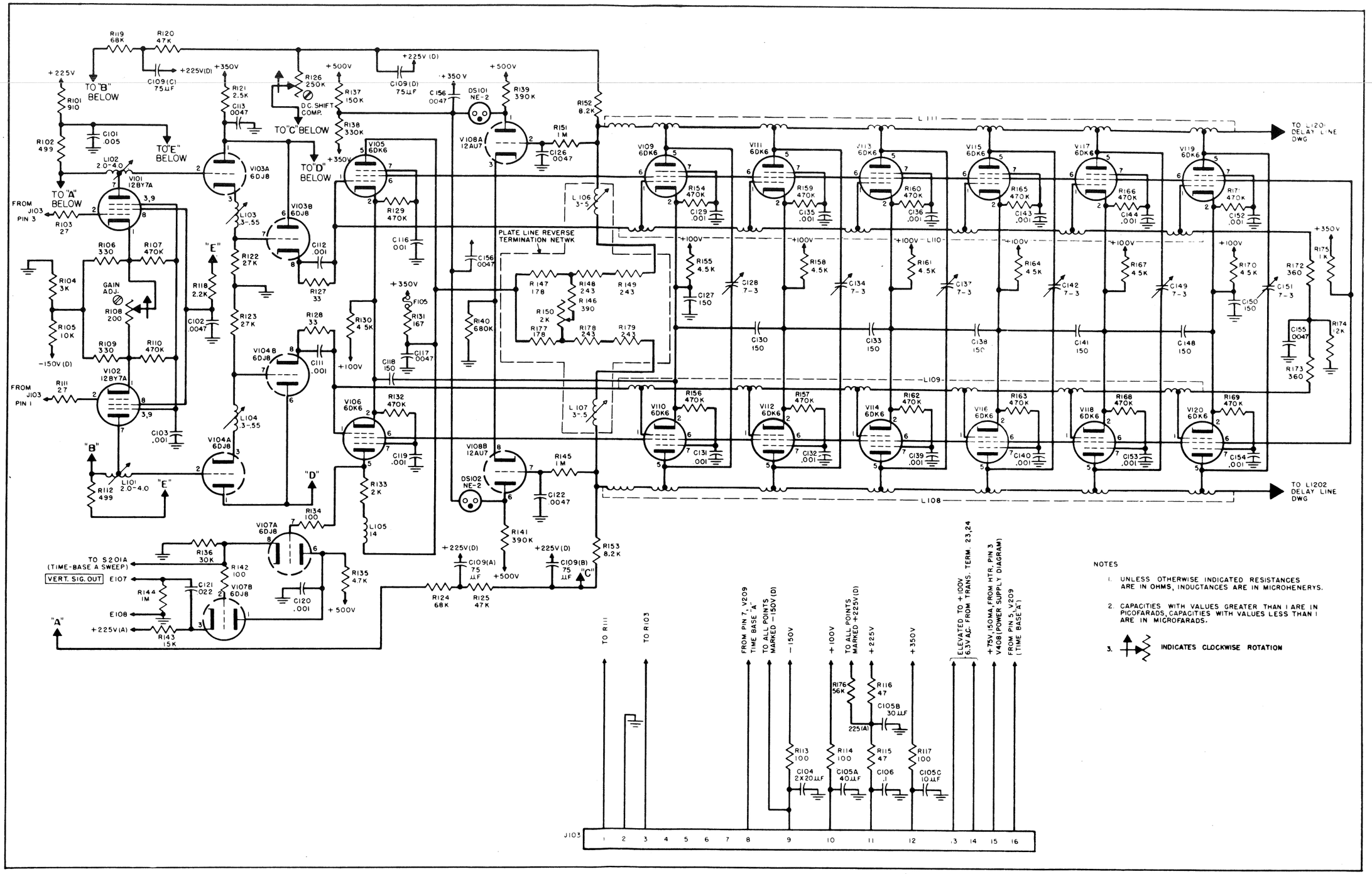

Figure 1-32. Vertical Amplifier, Schematic Diagram.

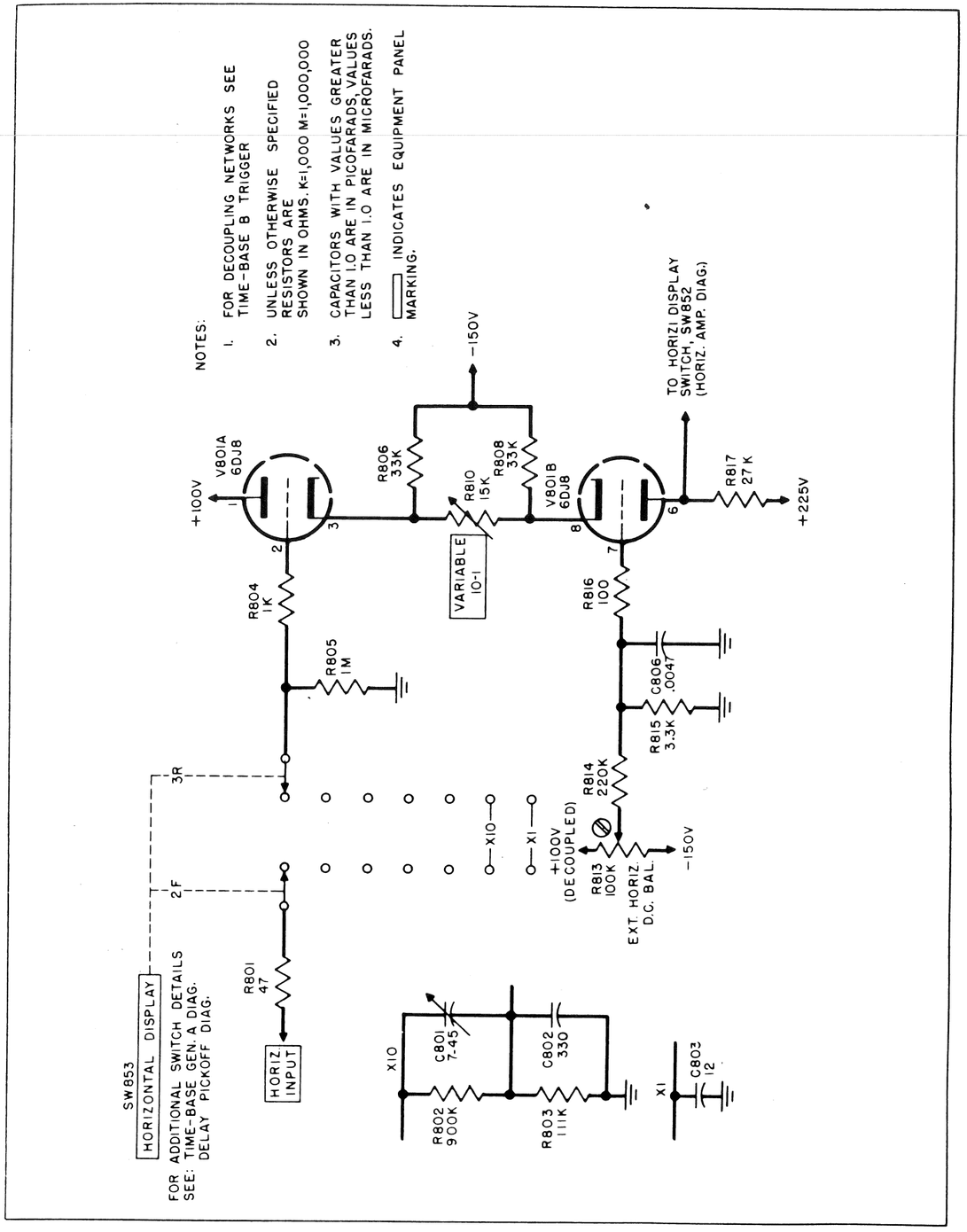

Figure 1-27. External Horizontal Amplifier, Schematic Diagram.

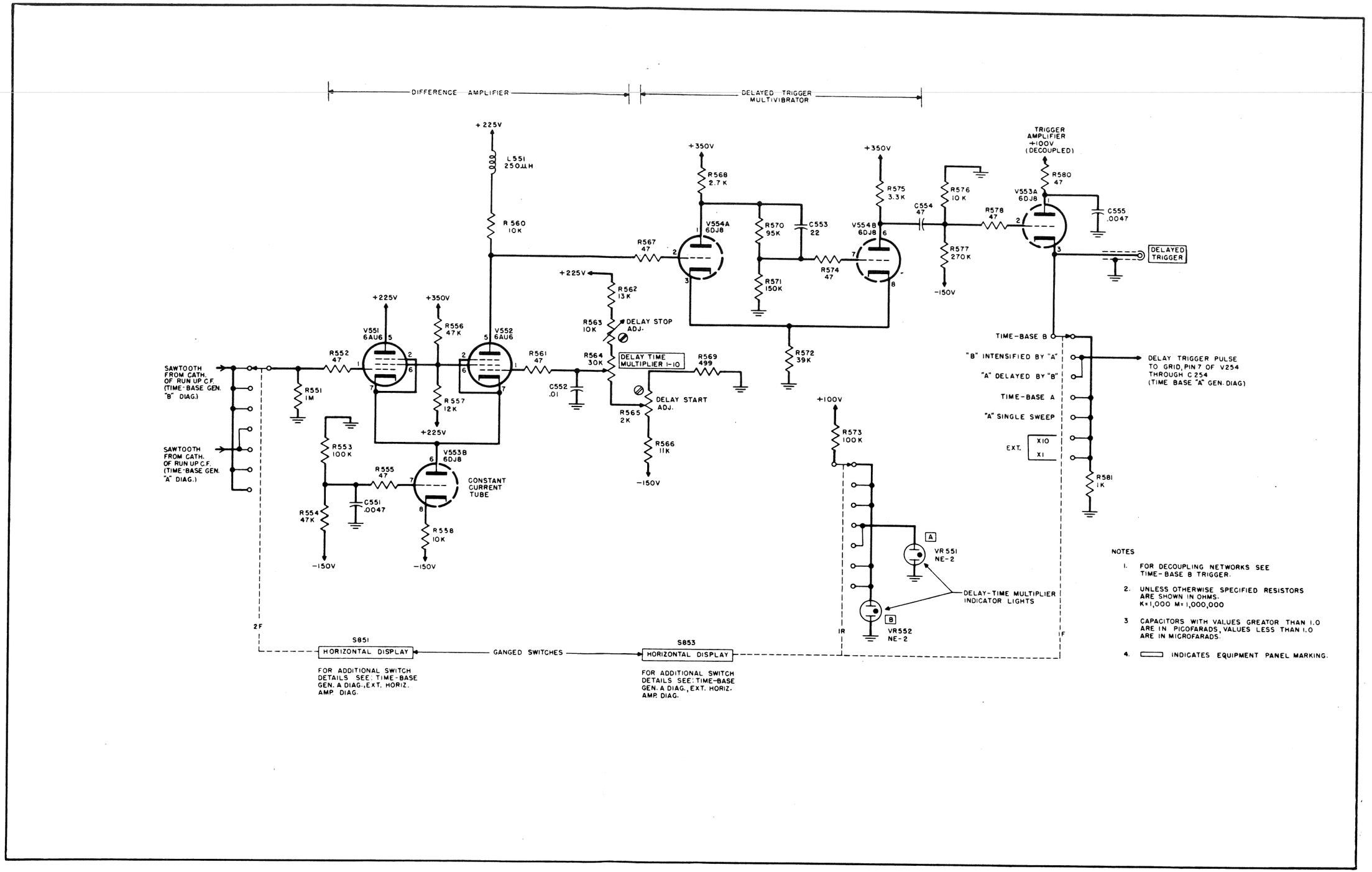

Figure 1-28. Delay Pickoff, Schematic Diagram.

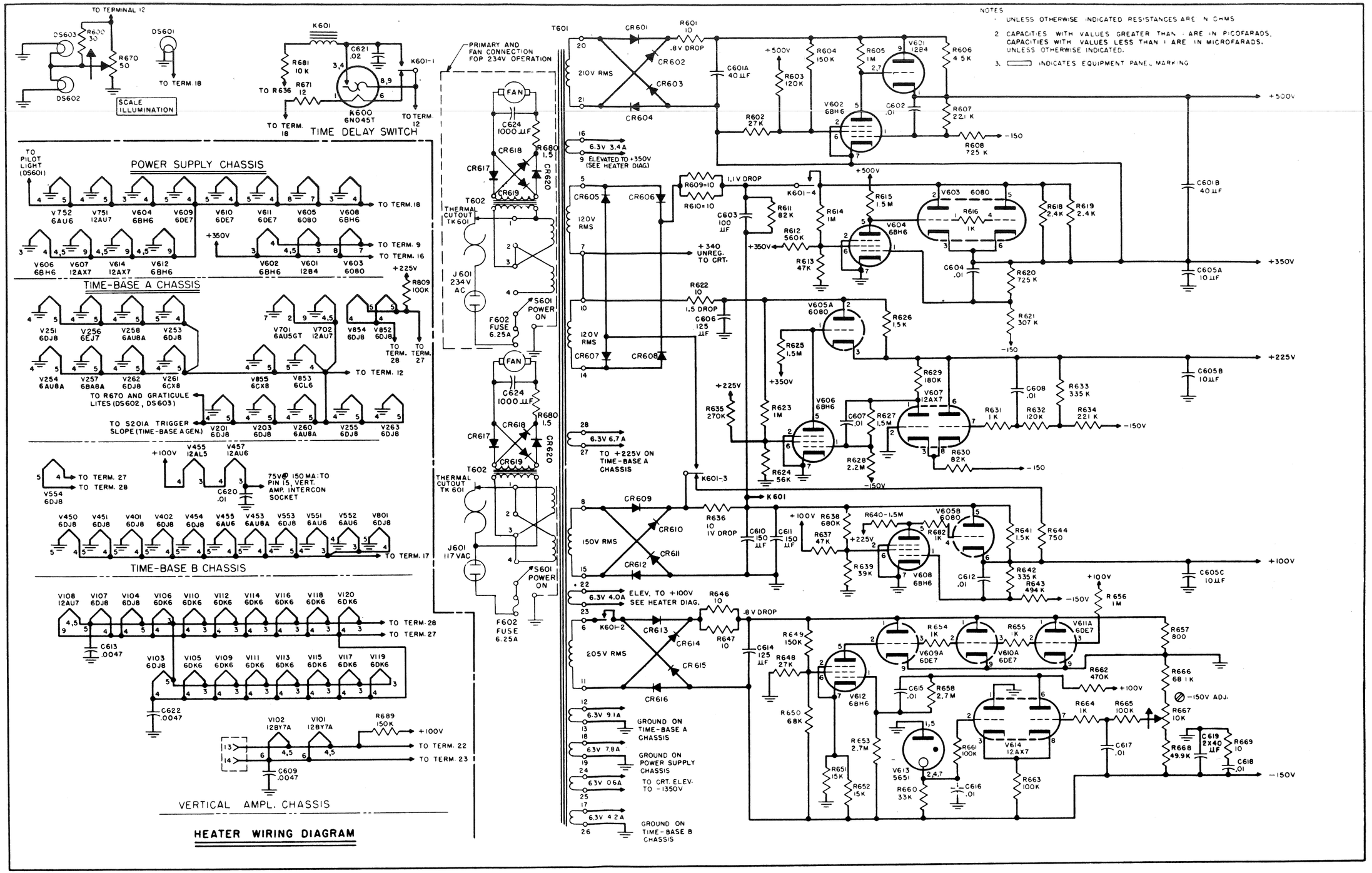

Figure 1-29. Low Voltage Power Supply, Schematic Diagram.

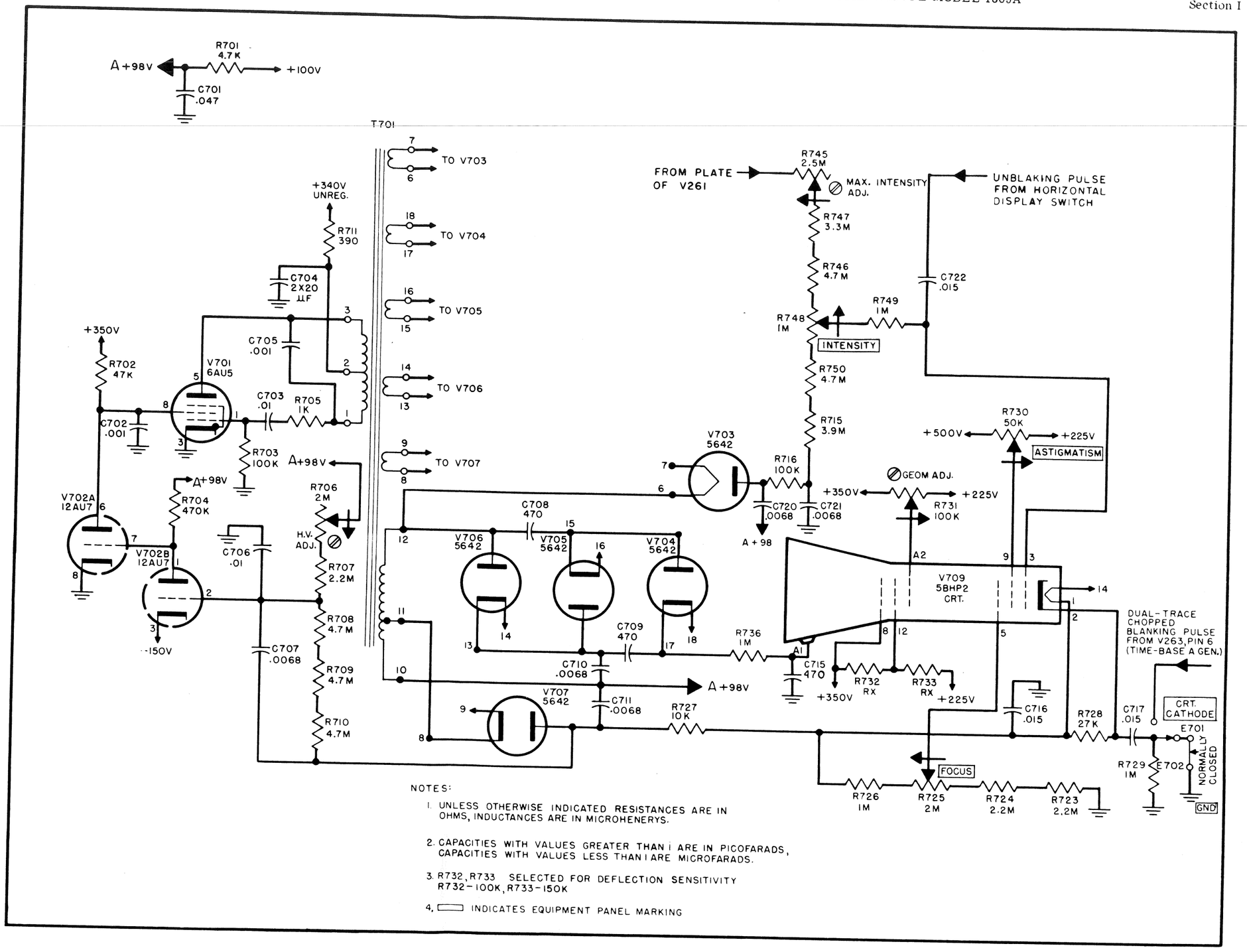

NOTES:

1. UNLESS OTHERWISE INDICATED RESISTANCES ARE IN OHMS, INDUCTANCES ARE IN MICROHENERYS.
2. CAPACITIES WITH VALUES GREATER THAN 1 ARE IN PICOFARADS, CAPACITIES WITH VALUES LESS THAN 1 ARE MICROFARADS.
3. R732, R733 SELECTED FOR DEFLECTION SENSITIVITY R732-100K, R733-150K
4. ▭ INDICATES EQUIPMENT PANEL MARKING

Figure 1-30. Cathode Ray Tube Circuit, Schematic Diagram.

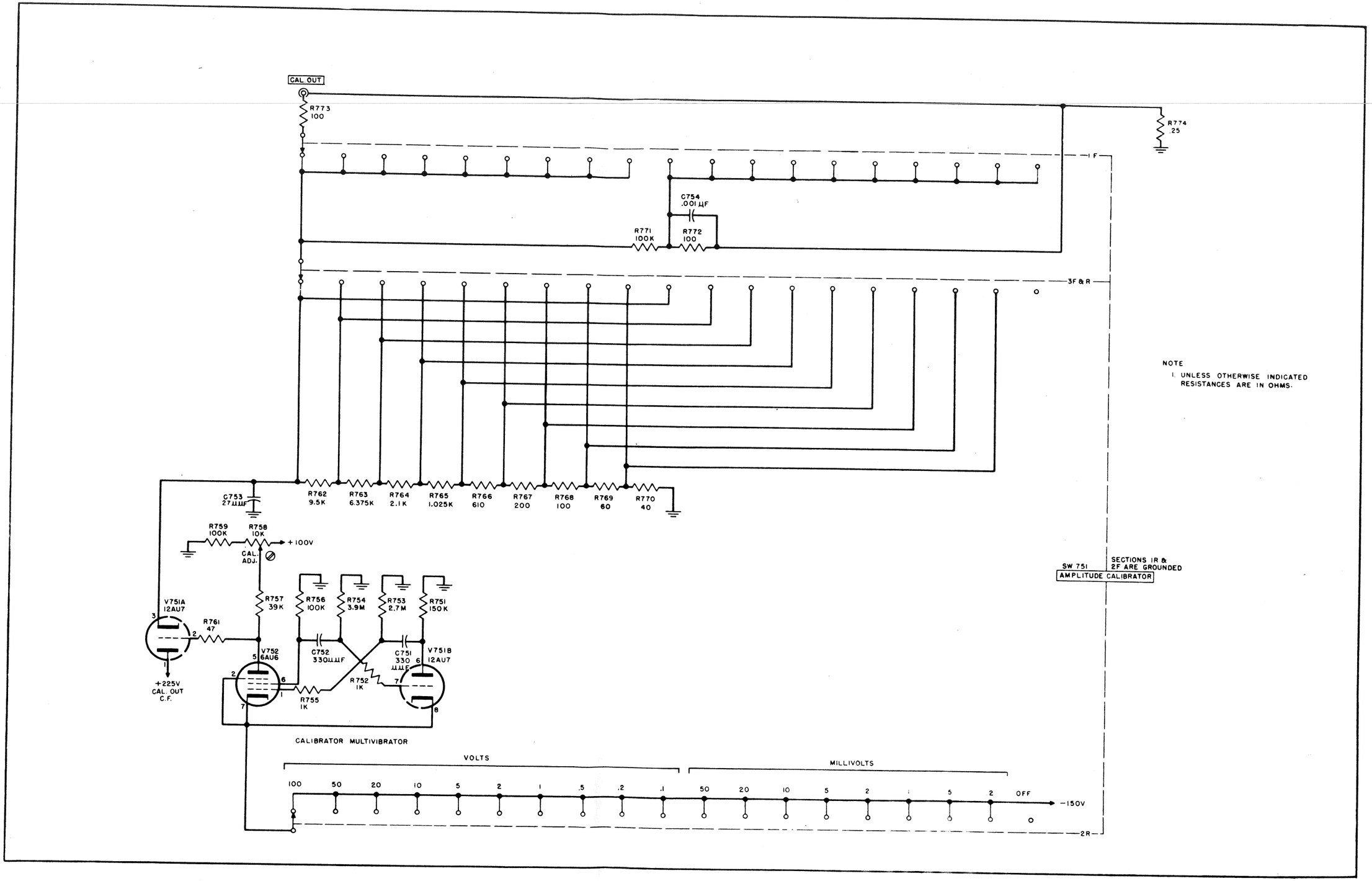

Figure 1-31. Calibrator, Schematic Diagram.

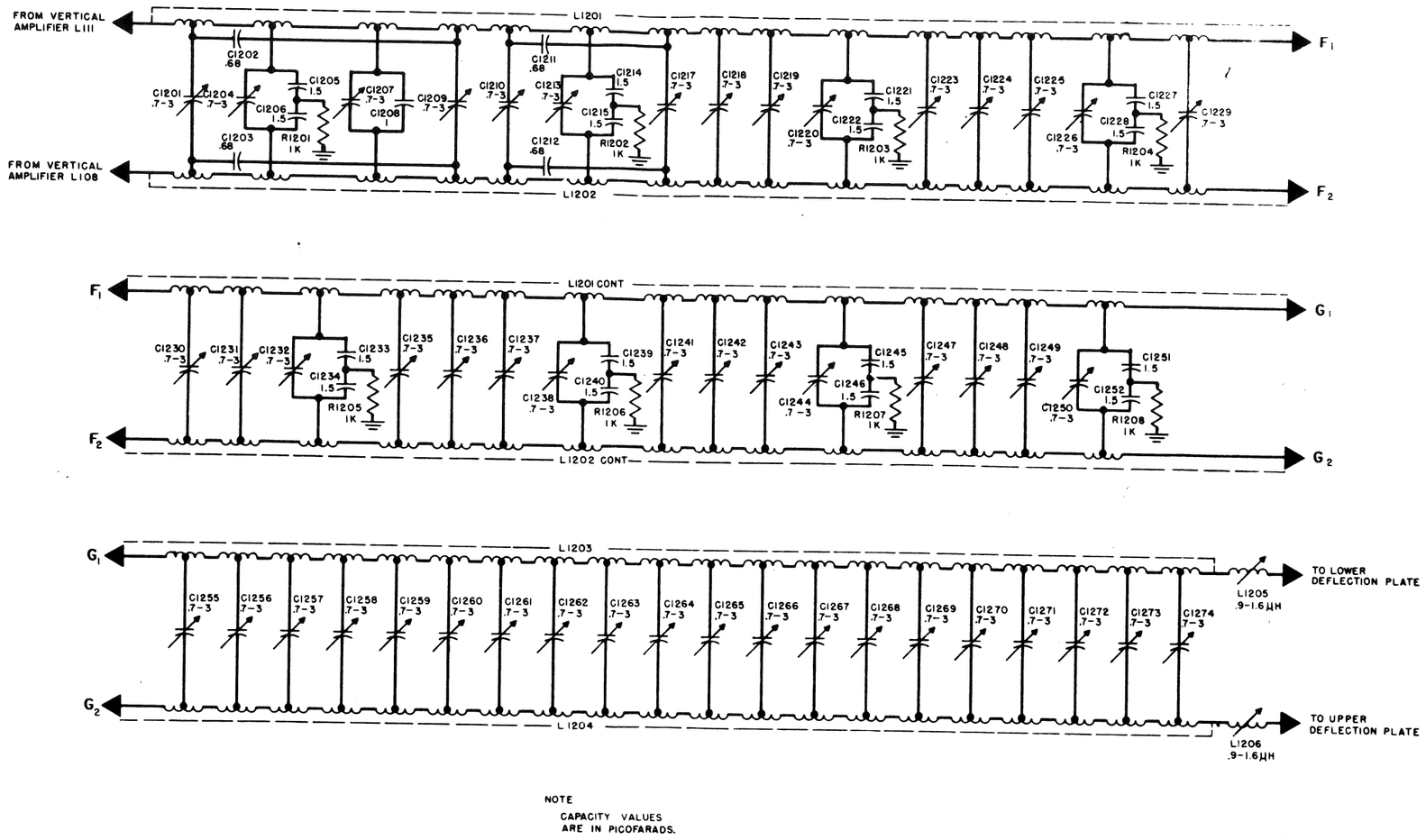

NOTE

CAPACITY VALUES ARE IN PICOFARADS.

Figure 1-33. Delay Line Network, Schematic Diagram.

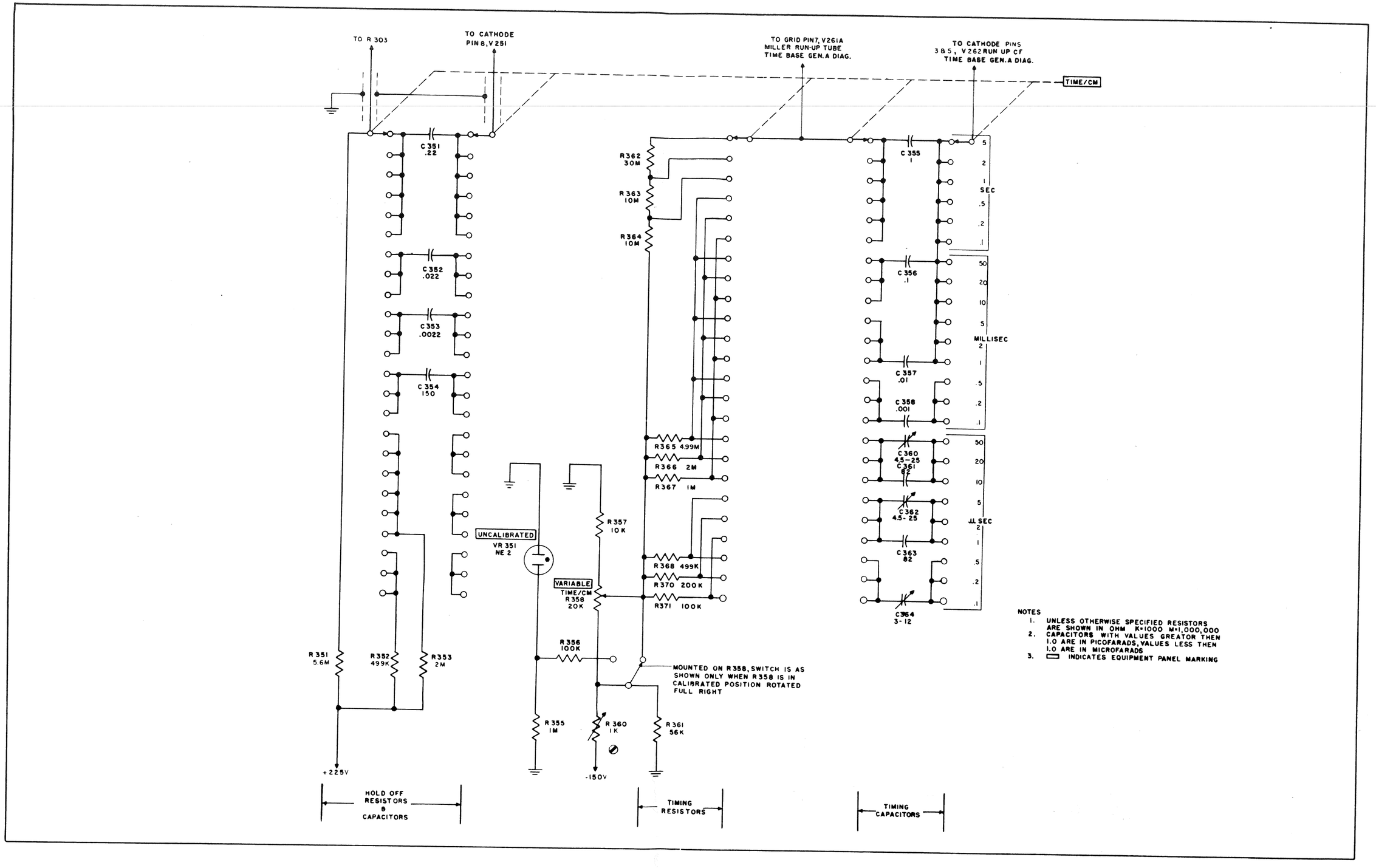

Figure 1-34. Time Base A Timing Switch, Schematic Diagram.

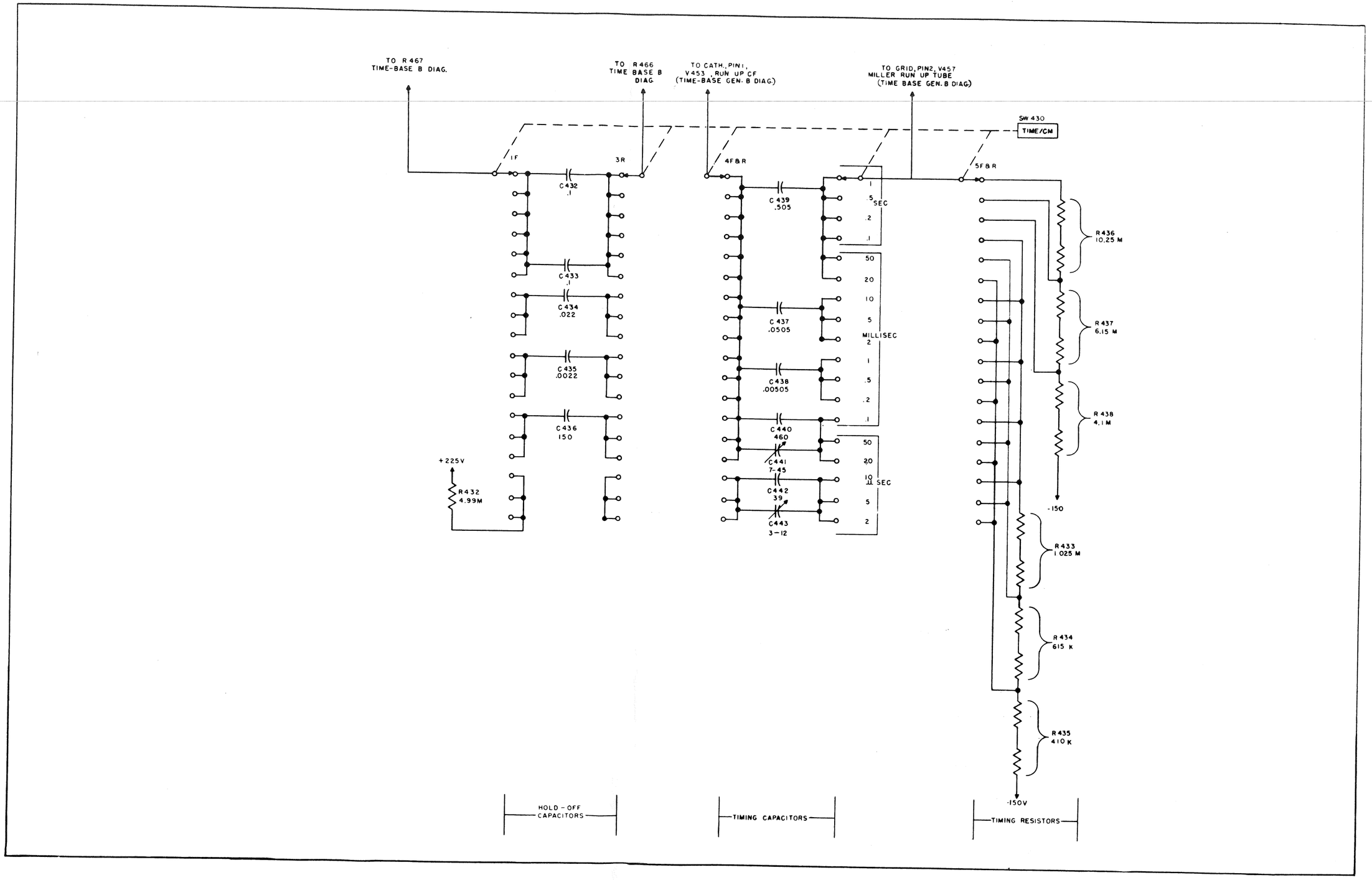

Figure 1-35. Time Base B Timing Switch, Schematic Diagram.