TEKTRONIX®

M3 RMS VOLTS MODULE

WITH OPTIONS

SERVICE

INSTRUCTION MANUAL

Tektronix, Inc.
P.O. Box 500
Beaverton, Oregon 97077

Serial Number _____

070-1513-00

First Printing APRIL 1975

WARRANTY

All TEKTRONIX instruments are warranted against defective materials and workmanship for one year. Any questions with respect to the warranty should be taken up with your TEKTRONIX Field Engineer or representative.

All requests for repairs and replacement parts should be directed to the TEKTRONIX Field Office or representative in your area. This will assure you the fastest possible service. Please include the instrument Type Number or Part Number and Serial Number with all requests for parts or service.

Specifications and price change privileges reserved.

U.S.A. and foreign TEKTRONIX products covered by U.S. and foreign patents and/or patents pending.

TABLE OF CONTENTS

LIST OF ILLUSTRATIONS

The illustrations in Section 7 are located near their associated Diagrams on the foldout pages.

LIST OF TABLES

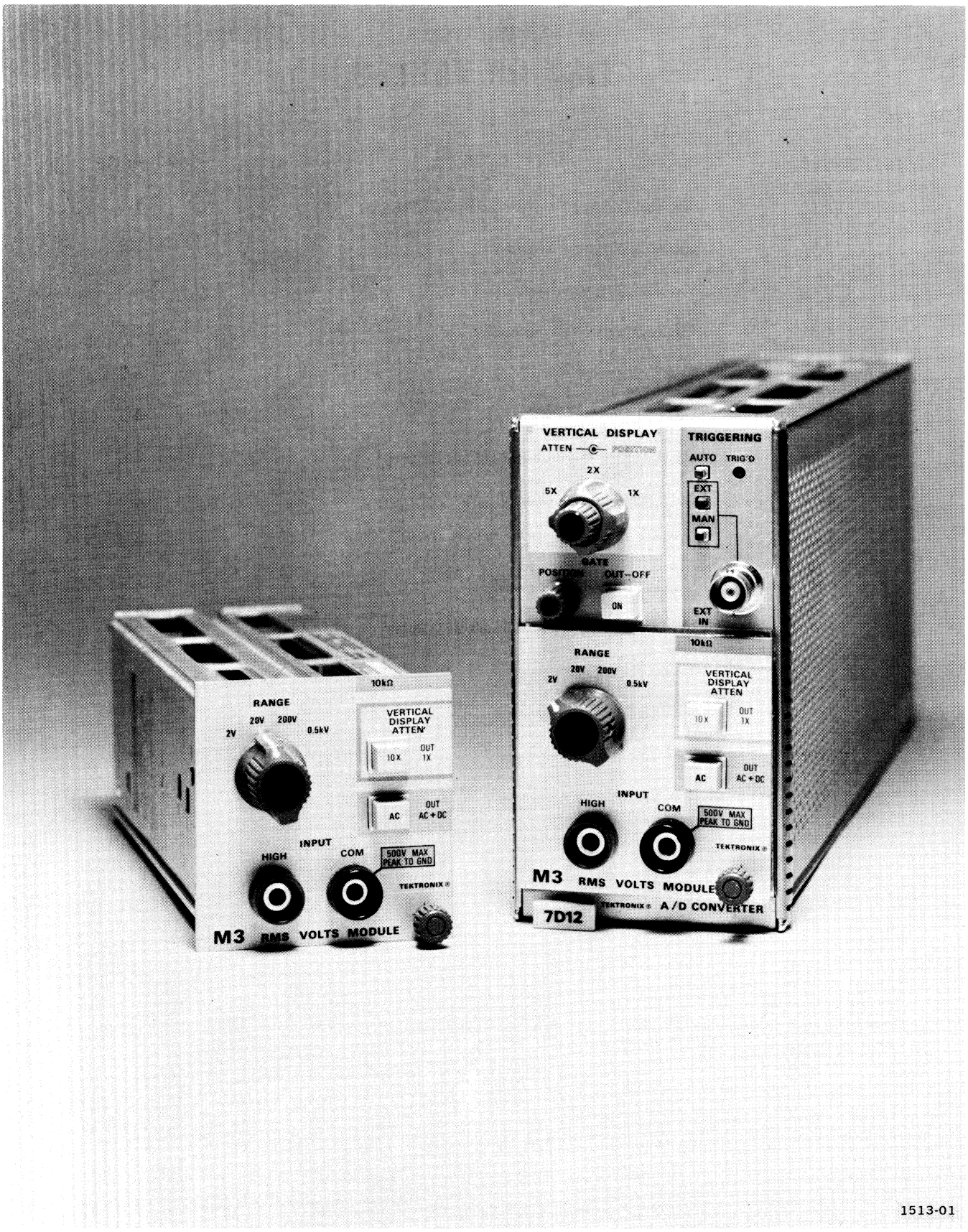

Fig. 1-1. M3 RMS VOLTS MODULE.

OPERATING INFORMATION

PRELIMINARY

M3 Features

The M3 RMS VOLTS MODULE operates with the 7D12 A/D Converter unit and a Tektronix 7000-series oscilloscope equipped with readout. The M3 provides the capability to measure the true rms value of any dc or ac voltage (see Frequency Response in Table 2-1) with a crest factor of less than five. Floating INPUT terminals that allow up to 500 volts peak to ground are used to couple the signal to the M3. The 7D12 converts the scaled dc equivalent of the ac analog signal into a digital readout to be displayed on the mainframe crt. The M3 input waveform can also be displayed on the mainframe crt.

To effectively use the M3, the operation and capabilities of the instrument should be known. This section describes the operation of the front-panel controls, giving first-time and general operating information.

Installation

The M3 is designed to operate in the 7D12 A/D Converter, which can be installed in any vertical plug-in compartment of a Tektronix 7000-series oscilloscope.

Display

The output from the M3 Module is a dc analog voltage. The 7D12 converts the analog voltage to a digital readout display presented on the mainframe crt. The input waveform can also be displayed on the crt through the 7D12 vertical amplifier section. The 7D12 readout and waveform displays are written by the crt beam along with the readout and waveforms from other plug-in units on a time-shared basis.

The digital readout display for the M3 will appear in the top division of the crt, and the vertical sensitivity, in volts per division, will appear in the bottom division of the crt in a location corresponding to the plug-in compartment used. If the analog input signal is to be displayed on the crt, the 7D12 and M3 must be selected by the oscilloscope Vertical Mode switch.

The rms readout display ranges from 000 to 2000 with a > symbol for over-ranging. The measurement units and decimal positions are determined by the M3 RANGE switch setting. The 7D12 Vertical Display Atten switch sets the first significant figure on the vertical sensitivity readout display.

OPERATING CHECKOUT

When shipped from the factory, the M3 was calibrated to meet the specifications listed in Table 2-1 and is ready to be used with a 7D12 A/D Converter and a readout-equipped Tektronix 7000-series oscilloscope.

The Digital Display Check in the following procedure provides an operational check to verify proper operation of the unit and the associated oscilloscope. This portion of the procedure is intended as a quick functional check only and should be performed each time the M3 and 7D12 is placed in a different oscilloscope.

The RMS Voltage portion of the procedure demonstrates the basic operation of the M3 RANGE control, VERTICAL DISPLAY ATTEN, and Coupling switches, and the 7D12 Vertical Display Atten switch, (see M3 front-panel control and connector functions, Fig. 1-2). It is recommended that the entire Operating Checkout procedure be followed completely for familiarization with the instrument. Operation of the oscilloscope is described in the oscilloscope instruction manual.

Vertical display sensitivity with relation to various control combinations is shown in Table 1-1. The tolerances given for the digital readout are for operation in an ambient temperature range of +15°C to +40°C. For operation outside these limits, refer to Table 2-1 in the Specification section.

TABLE 1-1
Vertical Display Sensitivity
(Volts/Division)

M3 Range	M3 Vertical Display Atten	7D12 Vertical Display Atten		
		1X	2X	5X
2 V	1 X	100 mV	200 mV	500 mV
	10 X	1000 mV	2000 mV	5000 mV
20 V	1 X	1 V	2 V	5 V
	10 X	10 V	20 V	50 V
200 V	1 X	10 V	20 V	50 V
	10 X	100 V	200 V	500 V
0.5 kV	1 X	100 V	200 V	500 V
	10 X	1000 V	2000 V	5000 V

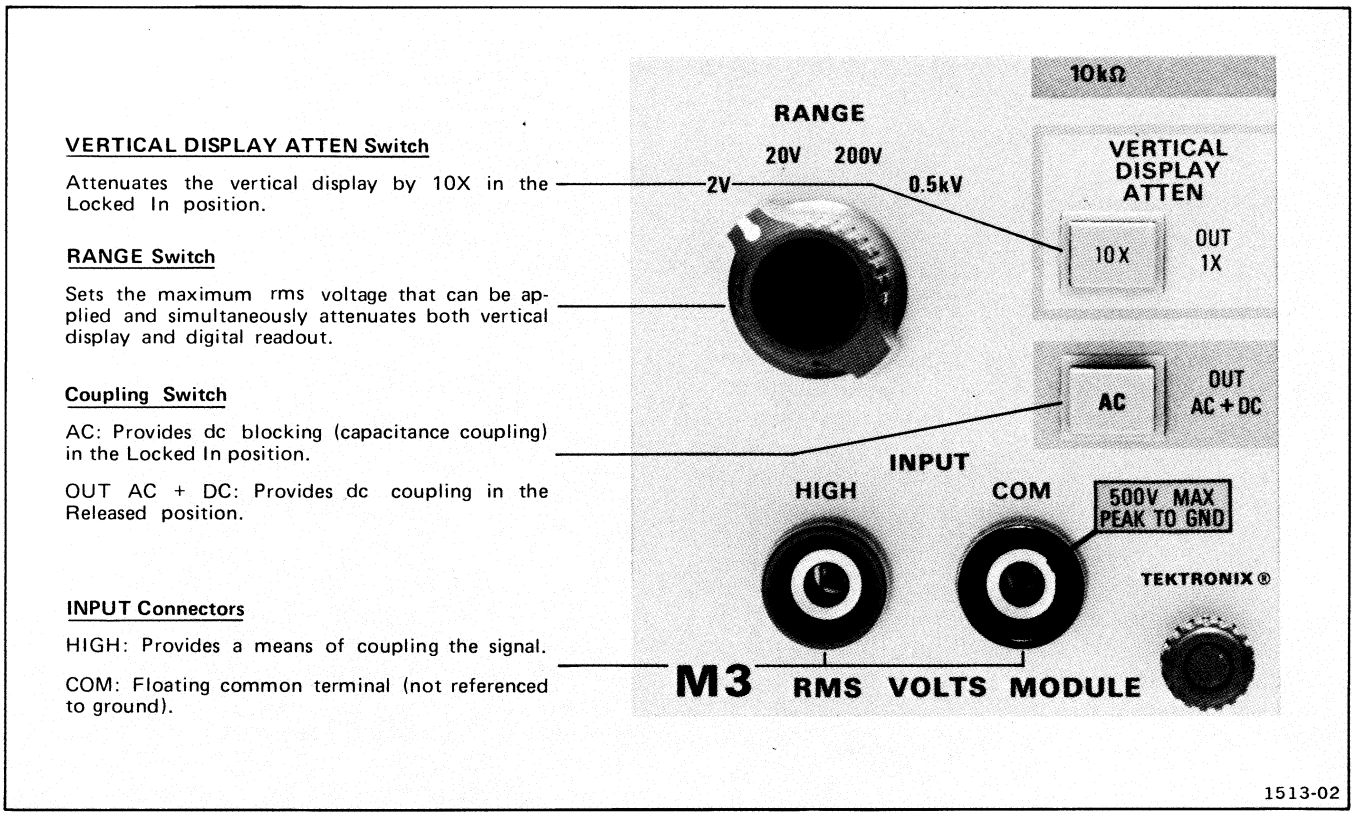

Fig. 1-2. M3 Front-panel control and connector functions.

Preliminary Instructions

1. Insert the M3 RMS VOLTS MODULE into the 7D12 A/D Converter and install in the left vertical compartment of a 7000-series oscilloscope.

2. Install a time base in a horizontal plug-in compartment of the oscilloscope.

3. Turn the oscilloscope power on and allow about twenty minutes warm-up time. During the warm-up period, set the controls as follows:

Oscilloscope	
Intensity	Counterclockwise
Readout	Off
Vertical Mode	Left
Horizontal Mode	A

7D12	
Vertical Display Atten	1X
Gate	Out-Off
Triggering	Auto

M3	
RANGE	2 V
VERTICAL DISPLAY ATTEN	OUT 1X
Coupling	OUT AC+DC

Digital Display Check

1. Connect the M3 INPUT connectors together with a short banana-plug jumper.

2. Adjust the oscilloscope controls to obtain a usable readout and sweep display on the crt. The M3 readout display (rms voltage) should appear in the upper graticule division, and the vertical sensitivity in volts per division should appear in the lower graticule division.

3. The readout should read within the limits of .000 V to .001 V and the vertical sensitivity should read 100 mV.

4. Set the M3 VERTICAL DISPLAY ATTEN to 10X.

5. The vertical sensitivity should read 1000 mV.

6. Set the RANGE switch to 20 V.

7. The readout should read within the limits of 0.00 V to 0.01 V, and the vertical sensitivity should read 10 V.

8. Set the M3 VERTICAL DISPLAY ATTEN to 1X.

9. The vertical sensitivity should read 1 V.

10. Set the RANGE switch to 200 V.

11. The readout should read within the limits of 00.0 V to 00.1 V, and the vertical sensitivity should read 10 V.

12. Set the M3 VERTICAL DISPLAY ATTEN to 10X.

13. The vertical sensitivity should read 100 V.

14. Set the RANGE switch to 0.5 kV.

15. The readout should read within the limits of .000 kV to .001 kV, and the vertical sensitivity should read 1000 V.

16. Set the M3 VERTICAL DISPLAY ATTEN to 1X.

17. The vertical sensitivity should read 100 V.

18. Set the 7D12 Vertical Display Atten to 2X.

19. The vertical sensitivity should read 200 V.

20. Set the 7D12 Vertical Display Atten to 5X.

21. The vertical sensitivity should read 500 V.

22. Rotate the 7D12 Vertical Display Position control fully clockwise and fully counterclockwise. Check that the trace can be positioned off the graticule area in both directions. Position the trace to the center horizontal graticule line.

23. Remove the banana-plug jumper from the INPUT connectors.

RMS Voltage

1. Connect the supplied test lead set to the INPUT connectors.

2. Set the controls as follows:

7D12	
Vertical Display Atten	1X
M3	
RANGE	20 V
VERTICAL DISPLAY ATTEN	OUT 1X
Coupling	OUT AC+DC

3. Connect a 4-volt calibrator signal from the oscilloscope to the INPUT connectors.

4. Set the time base controls to obtain a triggered calibrator waveform display.

5. Check the amplitude of the calibrator waveform display for approximately four divisions. (Note that the calibrator waveform baseline is referenced to zero volts.) See Fig. 1-3A.

6. Check that the readout display is the rms value of the input signal (approximately 2.83 V).

7. Set the M3 Coupling switch to AC.

8. The display should center itself on the crt, and the loss of the dc factor should change the rms readout display to read approximately 2.00 V. See Fig. 1-3B.

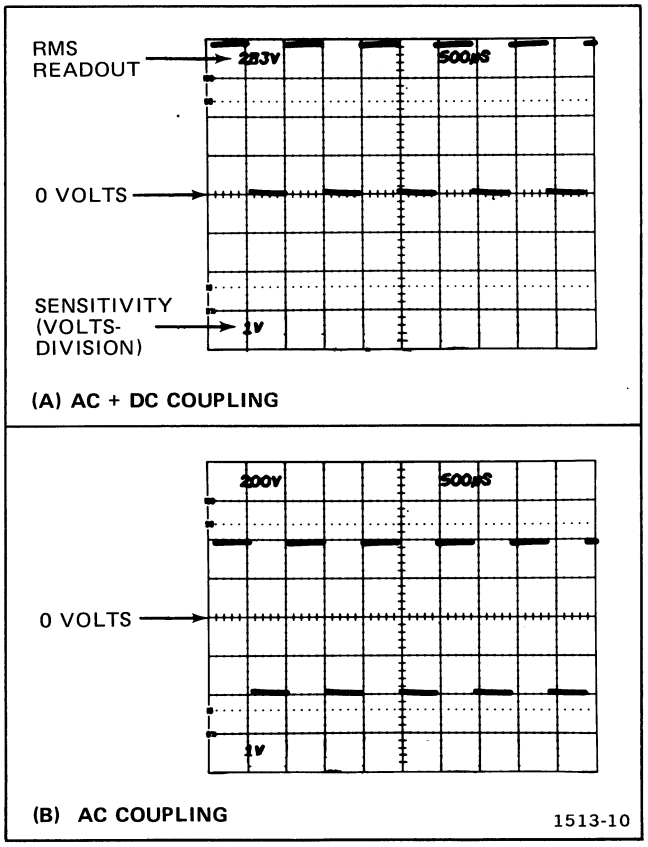

Fig. 1-3. Analog waveform and digital displays.

SPECIFICATION

The electrical characteristics listed in Table 2-1 are valid over the stated environmental range for instruments calibrated at an ambient temperature of +20°C to +30°C, and after a 20-minute warmup unless otherwise noted. Limits and tolerances given in the Supplemental Information column are provided for user information only and should not be interpreted as Performance Requirements.

TABLE 2-1
Electrical Characteristics

Characteristic	Performance Requirement	Supplemental Information
Input		
Impedance		1 megohm, within 1%, shunted by 50 picofarads or less.
Crest Factor (Maximum)		Five. $\text{Crest Factor} = \frac{E_{pk}}{E_{RMS}}$
Peak Voltage (Maximum)		2.5 times the RANGE setting, except 500 volt rms range which is limited to 1,000 volts peak.
Maximum Non-Destruct Input Voltage (Between INPUT Connectors)		500 volts rms. 1000 volts peak.
Maximum Non-Destruct Input Voltage (Between Either INPUT Connector and Chassis Ground)		500 volts peak.
DC in AC Coupled Mode (Maximum)		200 volts.
Digital System CMR (100 Ω Unbalance)		66 dB at DC to 60 Hz. Decreases 20 dB per decade for higher frequencies.
Digital Accuracy (M3 and 7D12 Combination) +15°C to +40°C		
Sine Wave Input Reading Greater Than 5% of Full Scale		Waveforms with form factors greater than 1.2 add: ± [0.1% X (form factor −1] to the percentage of full scale accuracy specifications. $\text{Form Factor} = \frac{E_{RMS}}{E_{Average}}$

TABLE 2-1 (CONT.)
Electrical Characteristics

Characteristic	Performance Requirement	Supplemental Information
2 Volt and 20 Volt Ranges		
DC	Within 0.5% of full scale.	
40 Hz to 40 kHz	Within 0.25% of full scale.	
40 kHz to 100 kHz	Within 0.5% of full scale.	
200 Volt Range		
DC	Within 0.5% of full scale.	
40 Hz to 4 kHz	Within 0.25% of full scale.	
4 kHz to 100 kHz	Within 0.5% of full scale; within 1% of reading.	
500 Volt Range		
DC	Within 1% of full scale.	
40 Hz to 4 kHz	Within 1% of full scale.	
4 kHz to 100 kHz	Within (2% of full scale plus 1% of reading).	
Digital Measurement		
RMS Readout Display Range	0 to 500 volts.	Selected in four ranges of: .000 V to 2.000 V 0.00 V to 20.00 V 00.0 V to 200.0 V, and .000 V to .500 kV.
Setting Time		250 milliseconds to 63% of final answer after step function from zero volts.
Display		3-1/2 digits of display.
Legend on Channel 2		Vertical display sensitivity.
Vertical Display		
(M3 and 7D12 Combination) Sensitivity (Vertical Display and Scale Factor Readout)	M3 VERTICAL DISPLAY ATTEN in 1X position provides twelve steps in a 1, 2, 5 sequence from 100 mV/division to 500 V/division. M3 VERTICAL DISPLAY ATTEN in 10X position reduces the vertical sensitivity by a factor of 10.	Selected by combination settings of the M3 RANGE and 7D12 Vertical Display Atten switches.

TABLE 2-1 (CONT.)
Electrical Characteristics

Characteristic	Performance Requirement	Supplemental Information
Frequency Response	Dc to 0.7 MHz at 3 dB down.	Slew rate limited to full scale voltage per microsecond (maximum 100 volts per microsecond).
Aberrations		Less than 5%.
Gain Accuracy		Within 7%.

TABLE 2-2
Physical Characteristics

Size	Fits the 7D12 A/D Converter only.
Weight	12 Ounces (0.340 Kilogram).

TABLE 2-3
Environmental Characteristics

Refer to the specification for the associated Mainframe.

MAINTENANCE

This section of the manual contains specific maintenance information for the M3 Module. General maintenance information may be found in the Maintenance section of the 7D12 Service manual.

CIRCUIT BOARDS

The RMS Converter board has a polyphenylene oxide base. Use more than normal care when cleaning or soldering this board. The following rules should be observed when removing and replacing parts:

1. Use a low-wattage soldering iron (not over 15 watts).

2. Do not apply more heat than is absolutely necessary.

3. Use a vacuum type solder remover when removing multi-lead devices.

4. Use only water-soluble detergents, methyl, ethyl, or isopropyl alcohol to clean the circuit boards.

The Floating Coupler board has a fiberglass base. Components mounted on this board can be replaced using normal circuit board soldering techniques as outlined in the Maintenance section of the 7D12 Service manual.

CIRCUIT BOARD REPLACEMENT

The circuit boards may be removed from the M3 by following the procedure listed below:

1. Remove both side-cover retaining screws from rear panel and slide side covers from rear of module.

2. Disconnect both cable connectors from RMS Converter board.

3. Loosen hex-socket set-screws on RANGE switch knob and remove knob from shaft.

4. Remove 10 MHz crystal from its socket in Floating Coupler board.

5. Remove spring clip from threaded end of module retaining shaft.

6. Remove four screws from the rear panel and remove rear panel.

7. Remove board mounting screw from top front corner of RMS Converter board.

8. Pull both circuit boards from rear of module.

9. Loosen both mounting screws on Floating Coupler board.

10. Pull Floating Coupler board from interconnecting pins.

11. Reverse procedure to replace circuit boards.

PERFORMANCE CHECK/CALIBRATION

PRELIMINARY INFORMATION

Calibration Interval

To insure instrument accuracy, check the performance of the M3 every 1000 hours of operation, or every six months if used infrequently. Before complete calibration, thoroughly clean and inspect this instrument.

Tektronix Field Services

Tektronix, Inc. provides complete instrument repair and recalibration at local Field Service Centers and the Factory Service Center. Contact your local Tektronix Field Office or representative for further information.

Using This Procedure

This procedure provides several features to facilitate calibration of the M3. These are:

INDEX. An index is given preceding the Performance and Calibration Procedures to aid in locating steps.

PERFORMANCE CHECK. The performance of this instrument can be checked without making internal adjustments by performing only Part I—Performance Check. This procedure checks the M3 against the tolerances listed as a Performance Requirement (see Specification section).

CALIBRATION PROCEDURE. Completion of each step in Part II—Calibration ensures that this instrument is correctly adjusted and performing within all given tolerances. Where possible, instrument performance is checked before an adjustment is made. For best overall performance when performing a complete calibration, make each adjustment to the exact setting, even if the CHECK— is in tolerance.

PARTIAL PROCEDURES. A partial performance check or calibration is often desireable after replacing components, or to touch up the adjustment of a portion of the instrument between major recalibrations. To check or adjust only part of the instrument, start with the Equipment Required list preceding the desired portion of the procedure. To prevent unnecessary recalibration of other parts of the instrument, re-adjust only if the tolerance given in the CHECK— part of the step is not met.

TEST EQUIPMENT REQUIRED

The test equipment and accessories listed in Table 4-1 are required for complete calibration of the M3. Specifications given for the equipment are the minimum necessary for accurate calibration. Therefore, the equipment used must meet or exceed the listed specifications. Detailed operating instructions for the test equipment are not given in this procedure. Refer to the appropriate instruction manual if more information is needed.

If only a Performance Check is to be performed, not all of the listed test equipment is required. Items used only for calibration are indicated by footnote 1. The remaining pieces of equipment are common to both procedures.

Special Calibration Fixtures

Special Tektronix calibration fixtures are used only where they facilitate instrument calibration. These special calibration fixtures are available from Tektronix, Inc. Order by part number through your local Tektronix Field Office or representative.

Test Equipment Alternatives

All of the listed test equipment is required to completely check and calibrate this instrument. However, complete checking or calibration may not always be necessary or desirable. The user may be satisfied with checking only selected characteristics, thereby reducing the amount of test equipment actually required.

The Performance Check and Calibration procedures are based on the first item of equipment given as an example. When other equipment is substituted, control settings or calibration setup might need to be altered. If the exact item of equipment given as an example in the Test Equipment list is not available, first check the specifications column carefully to see if any other equipment might suffice. Then check the Usage column to see what this item is used for. If used for a check or adjustment that is of little or no importance to your measurement requirements, the item and corresponding step(s) can be deleted.

Signal Connections

Detailed signal-connection information is not given in this procedure except when critical for a particular test. In general, the M3 INPUT should be connected to other equipment with the test lead set provided. However, 50-ohm coaxial cables may be used with a BNC female to dual banana plug adapter (Tektronix part 103-0090-00).

TABLE 4-1
Test Equipment

Description	Minimum Specifications	Usage	Examples of Applicable Test Equipment
1. Indicator Oscilloscope	Tektronix 7000-series oscilloscope equipped with a readout system.	Used throughout procedure to provide vertical and readout displays.	a. Tektronix 7704A Oscilloscope. b. Tektronix 7603 Oscilloscope.
2. 7D12 A/D Converter		Used throughout procedure as interface between M3 and indicator oscilloscope.	a. Tektronix 7D12 A/D Converter.
3. Time-base Plug-in Unit	Tektronix 7B-series.	Used throughout procedure to provide sweep display.	a. Tektronix 7B70 Time Base. b. Tektronix 7B50 Time Base.
4. Ac Calibration System	Frequency range, 40 Hz to 700 kHz with accuracy within 2%; voltage range, 2 V to 500 V with accuracy within 0.05%.	Used throughout procedure as standard amplitude and frequency sine-wave source.	a. Hewlett Packard 745A AC Calibrator and 746A HV Amplifier.
5. Dc Voltage Standard	Range, 2 V to 500 V; accuracy, within 0.05%.	Dc voltage measurement accuracy check.	a. Fluke Model 341A or 343A DC Voltage Calibrator.
6. Amplitude Calibrator	Square-wave output; amplitude, 0.5 V, 5 V, 50 V, and 100 V; frequency approximately 1 kHz.	Display gain checks. Vertical display gain adjustment.	a. Tektronix Calibration Fixture 067-0502-01.
7. Precision Dc Voltmeter[1]	Accuracy, within 0.1% of reading; range, 0.000 V to 0.010 V; resolution, 100 μV.	Lo offset adjustment. Hi offset adjustment.	a. Tektronix DM501 Digital Multimeter and power module. b. Tektronix 7D12 A/D Converter and M1 Multifunction Module.
8. Plug-in Extender[1]	Tektronix 7000-series plug-in extender.	Allows access to internal adjustments in M3.	a. Tektronix Part 067-0616-00 (flexible). b. Tektronix Part 067-0589-00 (rigid).
9. Adapter	BNC to dual binding post.	200 V and 0.5 kV range attenuator compensation adjustment.	a. Tektronix Part 103-0035-00.
10. Adapter (two required)	BNC female to dual banana plug.	Used throughout procedure for coupling coaxial cable to M3 INPUT jacks.	a. Tektronix Part 103-0090-00.
11. Coaxial Cable	Impedance, 50 Ω; connectors, BNC male; length, 42 inches.	Used throughout procedure for signal coupling where test lead set is not used.	a. Tektronix Part 012-0057-01.

[1] **Used for calibration only; NOT used for performance check.**

TABLE 4-1 (CONT.)
Test Equipment

Description	Minimum Specifications	Usage	Examples of Applicable Test Equipment
12. Test Lead Set (M3 Standard Accessory)		Used throughout procedure to connect signal to M3 INPUT jacks.	a. Tektronix Part 012-0427-00.
13. Screwdriver[1]	Three-inch shaft, 3/32-inch bit.	Used throughout procedure to adjust variable resistors.	a. Xcelite R-3323.
14. Alignment Tool[1]	Low capacitance; metal or plastic blade tip; shank must be non-conducting.	Carrier filter null adjustment. Attenuator compensation adjustments.	a. Tektronix Part 003-0307-00 (handle) and 003-0308-00 (insert).

[1] **Used for calibration only; NOT used for performance check.**

PART I—PERFORMANCE CHECK

The following procedure checks the performance of the M3 without making internal adjustments. All tolerances given in this procedure are based on the M3 Performance Requirements given in the Specification section.

INDEX TO PART I—PERFORMANCE CHECK

PRELIMINARY PROCEDURE

NOTE

The performance of this instrument can be checked at any temperature within the +15°C to +40°C range unless stated otherwise.

1. Remove left side cover from 7D12 A/D Converter and set internal Display Mode switch to Chop position (refer to Operators Manual).

2. Insert M3 Module into 7D12 A/D Converter and install 7D12 in vertical plug-in compartment of indicator oscilloscope.

3. Install time-base unit in horizontal plug-in compartment of indicator oscilloscope.

4. Turn indicator oscilloscope power on. Allow at least twenty minutes warm-up before checking M3 to given accuracy.

5. Set indicator oscilloscope controls to display time base and 7D12. Select 7D12 as internal trigger source for time-base unit and set time-base sweep rate for 200 microseconds per division.

6. Set indicator oscilloscope controls for well-defined sweep and readout displays.

NOTE

Titles for external controls of the M3 are capitalized in this procedure (e.g., RANGE). 7D12 external controls and M3 internal adjustments are initial capitalized only (e.g., Triggering).

A. ATTENUATOR AND READOUT DISPLAY

Equipment Required

1. Indicator oscilloscope
2. 7D12 A/D Converter
3. Time-base unit
4. Amplitude calibrator
5. BNC female to dual banana-plug adapter
6. 50-ohm coaxial cable

1. CHECK DISPLAY GAIN

a. Set the 7D12 controls as follows:

Vertical Display Atten	1X
Triggering	Auto
Gate	Out-Off

b. Connect 0.5-volt square-wave signal from amplitude calibrator to M3 INPUT connectors.

c. Set time-base controls for stable square-wave display.

d. CHECK—Set M3 RANGE and amplitude calibrator controls to settings given in Table 4-2. Square-wave display should be within amplitude limits indicated for each combination of control settings given in Table 4-2.

TABLE 4-2
Vertical Display Accuracy

M3		Amplitude Calibrator	Vertical Display Amplitude (divisions)	
RANGE	VERTICAL DISPLAY ATTEN		Min	Max
2 V	OUT 1X	0.5 V	4.6	5.4
20 V	OUT 1X	5 V	4.6	5.4
20 V	10X	50 V	4.6	5.4
200 V	OUT 1X	50 V	4.6	5.4
0.5 kV	OUT 1X	100 V	0.9	1.1

2. CHECK VERTICAL SENSITIVITY AND READOUT DISPLAYS

a. Readout display (rms voltage readout) should appear in upper graticule division, and vertical display sensitivity (volts per division) should appear in lower graticule division. The following check confirms proper operation of vertical display sensitivity controls only. Rms voltage readout accuracy will be verified in a later check.

b. CHECK—Set M3 RANGE, VERTICAL DISPLAY ATTEN, and 7D12 Vertical Display Atten controls to settings given in Table 4-3 (on following page). Lower graticule readout display should show vertical sensitivity, and upper graticule readout display should show decimal placement for each combination of control settings listed in Table 4-3.

3. CHECK INPUT COUPLING

a. Set amplitude calibrator for a square-wave output of 0.2 volts.

b. Set M3 RANGE switch to 2 V.

c. Position square-wave display to vertical center of crt.

d. CHECK—Set M3 Coupling switch to AC. Waveform should shift downward (negative) approximately 1 division.

e. Disconnect square-wave signal.

f. CHECK—Trace moves off the graticule area in both directions as 7D12 Vertical Display Position control is rotated fully counterclockwise and clockwise.

TABLE 4-3
Vertical Sensitivity and Readout Display

M3		7D12	Vertical	Rms
RANGE	VERTICAL DISPLAY ATTEN	Vertical Display Atten	Sensitivity Readout Display	Voltage Readout Display[1]
2 V	OUT 1X	1X	100 mV	.NNN V
2 V	OUT 1X	2X	200 mV	.NNN V
2 V	OUT 1X	5X	500 mV	.NNN V
2 V	10X	5X	5000 mV	.NNN V
2 V	10X	2X	2000 mV	.NNN V
2 V	10X	1X	1000 mV	.NNN V
20 V	10X	1X	10 V	N.NN V
20 V	10X	2X	20 V	N.NN V
20 V	10X	5X	50 V	N.NN V
20 V	OUT 1X	5X	5 V	N.NN V
20 V	OUT 1X	2X	2 V	N.NN V
20 V	OUT 1X	1X	1 V	N.NN V
200 V	OUT 1X	1X	10 V	NN.N V
200 V	OUT 1X	2X	20 V	NN.N V
200 V	OUT 1X	5X	50 V	NN.N V
200 V	10X	5X	500 V	NN.N V
200 V	10X	2X	200 V	NN.N V
200 V	10X	1X	100 V	NN.N V
0.5 kV	10X	1X	1000 V	.NNN kV
0.5 kV	10X	2X	2000 V	.NNN kV
0.5 kV	10X	5X	5000 V	.NNN kV
0.5 kV	OUT 1X	5X	500 V	.NNN kV
0.5 kV	OUT 1X	2X	200 V	.NNN kV
0.5 kV	OUT 1X	1X	100 V	.NNN kV

[1] Decimal placement check only. Disregard numerals (N) which may be displayed.

B. RMS VOLTAGE MEASUREMENT ACCURACY

Equipment Required

1. Indicator oscilloscope
2. 7D12 A/D Converter
3. Time-base unit
4. Ac calibration system
5. Test lead set (M3 standard accessory)

Control Settings

Set controls as follows:

7D12	
Vertical Display Atten	5X
Triggering	Auto
Gate	Out-Off
M3	
RANGE	2 V
VERTICAL DISPLAY ATTEN	OUT 1X
Coupling	OUT AC+DC

Controls not mentioned can be set as desired.

M3 readout display (rms voltage readout) should appear in upper graticule division.

1. CHECK RMS VOLTAGE MEASUREMENT ACCURACY

a. Set output of ac calibrator system to zero volts.

b. Using test lead set, connect M3 HIGH and COM INPUT connectors to ac calibration system low-voltage output and common terminals respectively.

c. CHECK—Set M3 RANGE switch and output of ac calibrator system to settings given in Table 4-4. Readout display should show rms voltage within limits given for each RANGE switch setting and ac calibrator system output listed in Table 4-4. Time-base sweep rate has no effect on rms readout display.

NOTE

Readout will be preceded by > symbol if INPUT voltage equals or exceeds M3 RANGE switch setting, except on 0.5 kV range; however, this will not affect accuracy of check.

CAUTION

Instrument damage may result if input voltage exceeds 500 volts rms or 1000 volts peak, and input voltage should always be reduced to zero before switching M3 RANGE switch.

TABLE 4-4
RMS Readout Accuracy

M3 RANGE	AC Calibration System		RMS Readout Limits	
	FREQUENCY	RMS AMPLITUDE	MIN	MAX (Refer to preceding note)
2 V	40 Hz	2.00000 V	1.995 V	2.005 V
2 V	40 kHz	2.00000 V	1.995 V	2.005 V
2 V	100 kHz	2.00000 V	1.990 V	2.010 V
20 V	40 Hz	20.0000 V	19.95 V	20.05 V
20 V	40 kHz	20.0000 V	19.95 V	20.05 V
20 V	100 kHz	20.0000 V	19.90 V	20.10 V
200 V	40 Hz	200.000 V	199.5 V	200.5 V
200 V	4 kHz	200.000 V	199.5 V	200.5 V
200 V	100 kHz	200.000 V	197.0 V	203.0 V
0.5 kV	40 Hz	500.000 V	.495 kV	.505 kV
0.5 kV	4 kHz	500.000 V	.495 kV	.505 kV
0.5 kV	100 kHz	500.000 V	.485 kV	.515 kV

d. Set ac calibration system for 40 Hz at 2.00000 volts, and M3 RANGE switch to 2 V position.

e. CHECK—Note exact readout voltage, then set M3 Coupling switch to AC. Readout voltage should remain within three (3) counts of first reading.

C. VERTICAL DISPLAY FREQUENCY RESPONSE

Equipment Required

1. Indicator oscilloscope
2. 7D12 A/D Converter
3. Time-base unit
4. Ac calibration system
5. Test lead set (M3 standard accessory)

Control Settings

Set the controls as follows:

7D12	
Vertical Display Atten	1X
Triggering	Auto
Gate	Off
M3	
RANGE	2 V
VERTICAL DISPLAY ATTEN	OUT 1X
Coupling	OUT AC+DC

Controls not mentioned can be set as desired.

1. CHECK VERTICAL DISPLAY BANDWIDTH

a. Set ac calibration system to display 6 divisions of amplitude at 35 kilohertz on crt.

b. Set ac calibration system output frequency to 700 kilohertz.

c. CHECK—Crt display amplitude should be at least 4.2 divisions.

d. Remove test lead connections from ac calibrator system terminals.

D. DC VOLTAGE MEASUREMENT ACCURACY

Equipment Required

1. Indicator oscilloscope
2. 7D12 A/D Converter
3. Time-base unit
4. Dc voltage standard
5. Test lead set (M3 standard accessory)

Control Settings

Set controls as follows:

7D12	
Vertical Display Atten	5X
Triggering	Auto
Gate	Out-Off
M3	
RANGE	2 V
VERTICAL DISPLAY ATTEN	OUT 1X
Coupling	OUT AC+DC

Controls not mentioned can be set as desired.

1. CHECK DC VOLTAGE MEASUREMENT ACCURACY

a. Set output of dc voltage standard to zero volts.

b. Using the test lead set, connect M3 HIGH and COM INPUT connectors to plus (+) and minus (−) output terminals respectively on dc voltage standard.

c. CHECK—Set M3 RANGE switch and output of dc voltage standard to settings given in Table 4-5. Readout display should read within limits given for each RANGE switch setting and dc voltage output listed in Table 4-5.

NOTE

The readout will be preceded by > symbol if INPUT voltage equals or exceeds M3 RANGE switch setting, except on 0.5 kV range; however, this will not affect accuracy of check.

TABLE 4-5
DC Voltage Accuracy

M3 RANGE	DC Voltage Standard Output	Readout Limits	
		Min	Max (Refer to preceding note)
2 V	2.00000 V	1.990 V	2.010 V
20 V	20.0000 V	19.90 V	20.10 V
200 V	200.000 V	199.0 V	201.0 V
0.5 kV	500.000 V	.495 kV	.505 kV

d. Set dc voltage standard output to zero, and position horizontal trace to crt center horizontal graticule line.

e. Set M3 RANGE switch to 2 V, and dc voltage standard to 2 volts. Note horizontal trace is deflected off crt graticule area.

f. CHECK—Set M3 Coupling switch to AC. Horizontal trace should return to crt center horizontal graticule line.

g. Set output of dc voltage standard to zero.

h. Disconnect all test equipment.

This completes the Performance Check of the M3, RMS VOLTS MODULE.

PART II– CALIBRATION

The following procedure returns the M3 to correct calibration. All limits and tolerances given in this procedure are calibration guides, and should not be interpreted as instrument specifications except as listed as a Performance Requirement in the Specification section.

INDEX TO PART II—CALIBRATION PROCEDURE

PRELIMINARY PROCEDURE

NOTE

This instrument should be calibrated at an ambient temperature of +25°C for best overall accuracy.

1. Remove both side covers from M3 Module.

2. Remove both side covers from 7D12 A/D Converter.

3. Insert M3 Module into 7D12.

4. Remove bottom panel from indicator oscilloscope.

5. Connect plug-in extender from vertical plug-in compartment of indicator oscilloscope to 7D12.

6. Install time-base unit in horizontal plug-in compartment of indicator oscilloscope.

7. Turn indicator oscilloscope power on. Allow at least twenty minutes warmup time before checking M3 to given accuracy.

8. Set indicator oscilloscope controls to display time base and 7D12. Select 7D12 as internal trigger source for time-base unit.

9. Set indicator oscilloscope readout and intensity controls to obtain usable readout and vertical display at sweep rate of 200 microseconds per division. Adjust focus and astigmatism controls as necessary for well-defined characters in display.

NOTE

Titles for external controls of the M3 are capitalized in this procedure (e.g., RANGE). 7D12 external controls and M3 internal adjustments are initial capitalized only (e.g., Triggering).

A. VERTICAL DISPLAY

Equipment Required

1. Indicator oscilloscope
2. 7D12 A/D Converter
3. Time-base unit
4. Plug-in extender
5. Amplitude calibrator
6. Ac calibration system
7. BNC female to dual banana-plug adapter
8. 50-ohm coaxial cable
9. Alignment tool
10. Screwdriver
11. Test lead set (M3 standard accessory)

BEFORE YOU BEGIN, see ADJUSTMENT LOCATOR in the Diagrams section.

Control Settings

Set the controls as follows:

7D12

Vertical Display Atten	1X
Triggering	Auto
Gate	Out-Off

M3

RANGE	2 V
VERTICAL DISPLAY ATTEN	OUT 1X
Coupling	OUT AC+DC

1. ADJUST 10-MEGAHERTZ CARRIER FILTER

a. Connect 0.5 volt square-wave signal from amplitude calibrator to M3 INPUT connectors.

b. Adjust time base controls for stable square-wave display.

c. ADJUST—Carrier Null adjustment, C152, for minimum trace width.

2. ADJUST DISPLAY GAIN

a. Center square wave display on crt using 7D12 Vertical Display Position control.

b. ADJUST—Display Gain adjustment, R117, for exactly 5 divisions of amplitude.

c. CHECK—Set M3 RANGE and amplitude calibrator controls to settings given in Table 4-6. Square-wave display should be within amplitude indicated for each combination of control settings given in Table 4-6.

TABLE 4-6
Vertical Display Accuracy

M3		Amplitude Calibrator	Vertical Display Amplitude (div)	
RANGE	VERTICAL DISPLAY ATTEN		MIN	MAX
2 V	OUT 1X	0.5 V	adjusted in part b.	
20 V	OUT 1X	5 V	4.6	5.4
20 V	10X	50 V	4.6	5.4
200 V	OUT 1X	50 V	4.6	5.4
0.5 kV	OUT 1X	100 V	0.9	1.1

3. CHECK VERTICAL SENSITIVITY AND READOUT DISPLAY

a. Readout display (rms voltage readout) should appear in upper graticule division, and vertical display sensitivity (volts per division) should appear in lower graticule division. Following check confirms proper operation of vertical display sensitivity controls only, rms voltage readout accuracy will be verified in later check.

b. CHECK—Set M3 RANGE, VERTICAL DISPLAY ATTEN, and 7D12 Vertical Display Atten controls to settings given in Table 4-7. Lower graticule readout display should show vertical sensitivity and upper graticule readout display should show decimal placement for each combination of control settings listed in Table 4-7.

TABLE 4-7
Vertical Sensitivity and Readout Display

M3		7D12	Vertical	Rms
RANGE	VERTICAL DISPLAY ATTEN	Vertical Display Atten	Sensitivity Readout Display	Voltage Readout Display[1]
2 V	OUT 1X	1X	100 mV	.NNN V
2 V	OUT 1X	2X	200 mV	.NNN V
2 V	OUT 1X	5X	500 mV	.NNN V
2 V	10X	5X	5000 mV	.NNN V
2 V	10X	2X	2000 mV	.NNN V
2 V	10X	1X	1000 mV	.NNN V
20 V	10X	1X	10 V	N.NN V
20 V	10X	2X	20 V	N.NN V
20 V	10X	5X	50 V	N.NN V
20 V	OUT 1X	5X	5 V	N.NN V
20 V	OUT 1X	2X	2 V	N.NN V
20 V	OUT 1X	1X	1 V	N.NN V
200 V	OUT 1X	1X	10 V	NN.N V
200 V	OUT 1X	2X	20 V	NN.N V
200 V	OUT 1X	5X	50 V	NN.N V
200 V	10X	5X	500 V	NN.N V
200 V	10X	2X	200 V	NN.N V
200 V	10X	1X	100 V	NN.N V
0.5 kV	10X	1X	1000 V	.NNN kV
0.5 kV	10X	2X	2000 V	.NNN kV
0.5 kV	10X	5X	5000 V	.NNN kV
0.5 kV	OUT 1X	5X	500 V	.NNN kV
0.5 kV	OUT 1X	2X	200 V	.NNN kV
0.5 kV	OUT 1X	1X	100 V	.NNN kV

[1] Decimal placement check only. Disregard numerals (N) which may be displayed.

4. CHECK INPUT COUPLING

a. Set M3 RANGE switch to 2 V.

b. Set amplitude calibrator for square wave output amplitude of 0.2 volts.

c. Position square wave display to vertical center of crt.

d. CHECK—Set M3 Coupling switch to AC. Waveform should shift downward (negative) approximately one division.

e. Disconnect square wave signal.

f. CHECK—Trace moves off graticule area in both directions as 7D12 Vertical Display Position control is rotated fully counterclockwise and clockwise.

5. ADJUST DISPLAY OFFSET

a. Set vertical display trace to center horizontal graticule line.

b. CHECK—For no vertical trace shift while switching the M3 VERTICAL DISPLAY ATTEN switch between 10X and OUT 1X.

c. ADJUST—Display Offset adjustment, R121, for no vertical trace shift while switching VERTICAL DISPLAY ATTEN switch between 10X and OUT 1X.

6. CHECK DISPLAY FREQUENCY RESPONSE

a. Set controls as follows:

7D12	
Vertical Display Atten	1X
M3	
RANGE	2 V
VERTICAL DISPLAY ATTEN	OUT 1X
Coupling	OUT AC+DC

Controls not mentioned can be set as desired.

b. Set ac calibration system to zero volts.

c. Using test lead set, connect M3 HIGH and COM INPUT connectors to ac calibration system low voltage output and common terminals respectively.

d. Set ac calibration system to display 6 divisions of amplitude at 35 kilohertz on crt.

e. Change ac calibration system output frequency to 700 kilohertz.

f. CHECK—Crt display amplitude should be equal to or greater than 4.2 divisions.

g. Disconnect test lead connections from ac calibration system terminals.

B. RMS CONVERTER

Equipment Required

1. Indicator oscilloscope
2. 7D12 A/D Converter
3. Plug-in extender
4. Ac calibration system
5. Precision dc voltmeter
6. Test lead set (M3 standard accessory)
7. BNC female to dual banana-plug adapter (two required)
8. BNC male to dual binding post adapter
9. 50-ohm coaxial cable
10. Screwdriver
11. Alignment tool

BEFORE YOU BEGIN, see ADJUSTMENT LOCATOR in the Diagrams section.

1. ADJUST LO OFFSET

a. Set controls as follows:

7D12

Vertical Display Atten	1X
Triggering	Auto
Gate	Out-Off

M3

RANGE	2 V

M3 (CONT.)

VERTICAL DISPLAY ATTEN	10X
Coupling	OUT AC+DC

b. Connect precision dc voltmeter plus lead to M3 test point, TP35. Connect minus lead to 7D12 floating ground (F GND) test point (see Fig. 4-1).

c. Short M3 INPUT HIGH and COM test leads together.

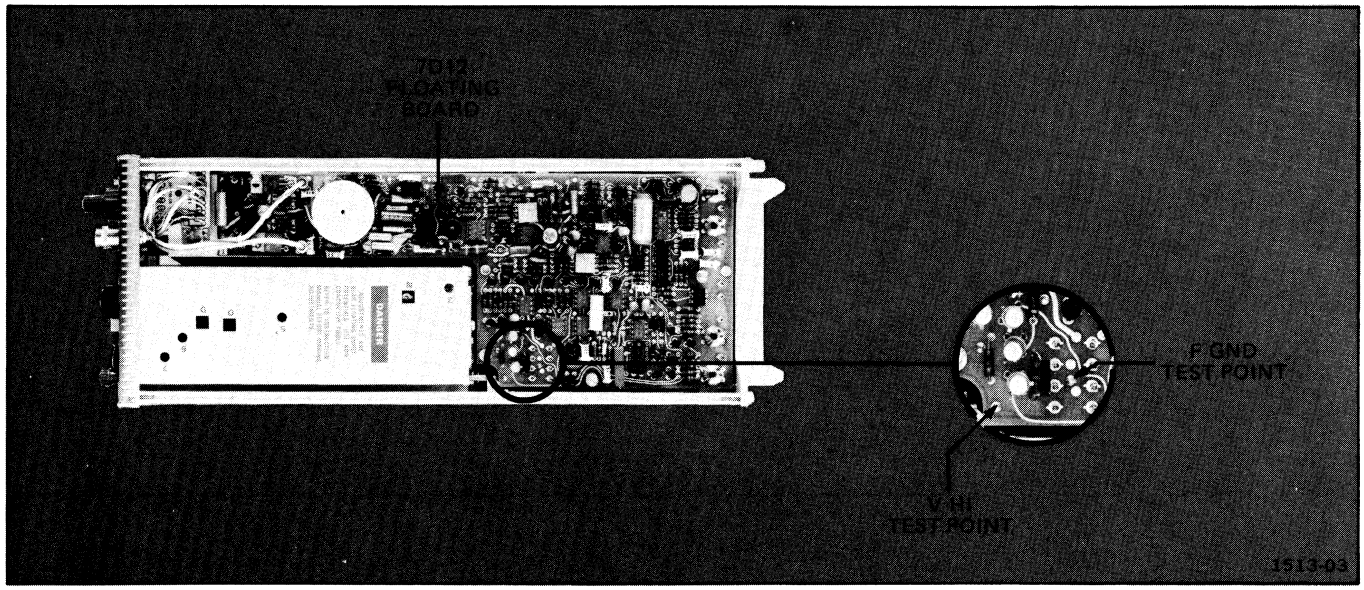

Fig. 4-1. Partial view of 7D12 floating board (A2).

d. ADJUST—Lo Offset adjustment, R37, for meter reading of 0.000 volts.

2. ADJUST HI OFFSET

a. Move precision dc voltmeter plus lead to M3 test point TP25.

b. ADJUST—Hi Offset adjustment, R27, for meter reading of 0.000 volts.

3. ADJUST OUTPUT OFFSET

a. Move precision dc voltmeter plus lead to 7D12 test point, V HI (refer to Fig. 4-1).

b. ADJUST—Output Offset adjustment, R76, for meter reading of +600 microvolts.

c. Disconnect all test leads.

4. ADJUST CONVERTER GAIN

a. Install both side covers on M3 module.

b. Disconnect plug-in extender and insert 7D12 directly into vertical plug-in compartment of indicator oscilloscope.

c. Set controls as follows:

7D12

Vertical Display Atten	5X
Triggering	Auto
Gate	Out-Off

M3

RANGE	2 V
VERTICAL DISPLAY ATTEN	10X
Coupling	OUT AC+DC

d. Connect 1.7000 volt, 1 kilohertz signal from ac calibration system to M3 INPUT using BNC female to dual banana-plug adapters and coaxial cable.

e. ADJUST—Converter Gain adjustment, R66, for readout display of 1.700 V.

5. CHECK 2-VOLT RANGE ACCURACY

a. Set M3 RANGE switch to 2 V.

b. CHECK—Set output of ac calibration system to settings given in Table 4-8. Readout display should show rms voltage within limits given for each ac calibration system output listed in Table 4-8. Time-base sweep rate has no effect on rms readout display.

NOTE

Readout will be preceded by > symbol if INPUT voltage equals or exceeds M3 RANGE switch setting; however, this will not affect accuracy of check.

TABLE 4-8
2-Volt Range Accuracy

AC Calibration System		RMS Readout Limits	
Frequency	RMS Amplitude	Min	Max (refer to preceding note)
40 Hz	1.00000 V	.995 V	1.005 V
40 Hz	2.00000 V	1.995 V	2.005 V
40 kHz	2.00000 V	1.995 V	2.005 V
40 kHz	1.00000 V	.995 V	1.005 V
100 kHz	1.00000 V	.995 V	1.005 V
100 kHz	2.00000 V	1.990 V	2.010 V

c. Set ac calibration system output to zero volts.

6. ADJUST 20-VOLT RANGE ATTENUATOR COMPENSATION

a. Set M3 RANGE switch to 20 V.

b. Set ac calibration system output for 20.0000 volt, 40 kilohertz signal.

c. ADJUST—10X Freq Comp adjustment, C11, for readout display of exactly > 20.00 V.

d. CHECK—Set output of ac calibration system to settings given in Table 4-9. Readout display should show rms voltage within limits given for each ac calibration system output listed in Table 4-9.

NOTE

Readout will be preceded by > symbol if M3 INPUT voltage equals or exceeds M3 RANGE switch setting; however, this will not affect accuracy of check.

TABLE 4-9
20-Volt Range Accuracy

AC Calibration System		RMS Readout Limits	
Frequency	RMS Amplitude	Min	Max (refer to preceding note)
40 Hz	20.0000 V	19.95 V	20.05 V
40 kHz	20.0000 V	19.95 V	20.05 V
100 kHz	20.0000 V	19.90 V	20.10 V

e. Set ac calibration system output to zero volts.

f. Disconnect coaxial cable.

7. ADJUST 200-VOLT RANGE ATTENUATOR COMPENSATION

a. Set controls as follows:

7D12

Vertical Display Atten	5X
Triggering	Auto
Gate	Out-Off

M3

RANGE	200 V
VERTICAL DISPLAY ATTEN	10X
Coupling	OUT AC+DC

CAUTION

To prevent switch arc-over, reduce the input voltage to zero before switching the M3 RANGE switch.

WARNING

M3 circuit boards elevated to input voltage. Use fiber or plastic alignment tools for all adjustments. Refer to test equipment list for recommended alignment tool.

b. Connect 200-volt, 40 kilohertz signal from ac calibration system to M3 INPUT jacks.

c. ADJUST—100X Freq Comp adjustment, C15, for readout display of exactly > 200.0 V.

d. CHECK—Set output of ac calibration system to settings given in Table 4-10. Readout display should show rms voltage within limits given for each ac calibration system output listed in Table 4-10.

NOTE

Readout will be preceded by a > symbol if the M3 INPUT voltage equals or exceeds M3 RANGE switch setting; however, this will not affect accuracy of check.

TABLE 4-10
200-Volt Range Accuracy

AC Calibration System		RMS Readout Limits	
Frequency	RMS Amplitude	Min	Max (refer to preceding note)
40 Hz	200.000 V	199.5 V	200.5 V
4 kHz	200.000 V	199.5 V	200.5 V
100 kHz	200.000 V	197.0 V	203.0 V

8. ADJUST 500-VOLT RANGE ATTENUATOR COMPENSATION

CAUTION

Instrument damage may result if input voltage exceeds 500 volts rms or 1000 volts peak, and input voltage should always be reduced to zero before switching M3 RANGE switch.

a. Set M3 RANGE switch to 0.5 kV, and 7D12 Vertical Display Atten switch to 2X.

b. Set ac calibration system for 500.00 volt, 40 kilohertz output signal.

WARNING

M3 circuit boards elevated to input voltage. Use fiber or plastic alignment tools for all adjustments. Refer to test equipment list for recommended alignment tool.

c. ADJUST—1000X Freq Comp adjustment, C19, for readout display of exactly > 500.0 V.

d. CHECK—Set output of ac calibration system to settings given in Table 4-11. Readout display should show rms voltage within limits given for each ac calibration system output listed in Table 4-11.

NOTE

Readout will be preceded by > symbol if M3 INPUT voltage equals or exceeds M3 RANGE switch setting; however, this will not affect accuracy of check.

TABLE 4-11
500-Volt Range Accuracy

AC Calibration System		RMS Readout Limits	
Frequency	RMS Amplitude	Min	Max (refer to preceding note)
40 Hz	500.000 V	.495 kV	.505 kV
4 kHz	500.000 V	.495 kV	.505 kV
100 kHz	500.000 V	.485 kV	.515 kV

e. Set ac calibration system for 40 Hz at 2.00000 volts, and M3 RANGE switch to 2 V position.

f. CHECK—Note exact readout voltage, then set M3 Coupling switch to AC. Readout voltage should remain within three (3) counts of first reading.

g. Set ac calibration system output to zero volts.

h. Disconnect all connections.

C. DC VOLTAGE MEASUREMENT ACCURACY

Equipment Required

1. Indicator oscilloscope
2. 7D12 A/D Converter
3. Time-base unit
4. Dc voltage standard
5. Test lead set (M3 standard accessory)

BEFORE YOU BEGIN, see ADJUSTMENT LOCATOR in the Diagrams section.

Control Settings

Set controls as follows:

7D12	
Vertical Display Atten	1X
Triggering	Auto
Gate	Out-Off
M3	
RANGE	2 V
VERTICAL DISPLAY ATTEN	OUT 1X
Coupling	OUT AC+DC

1. CHECK DC VOLTAGE MEASUREMENT ACCURACY

a. Set output of dc voltage standard to zero volts.

b. Using test lead set, connect M3 HIGH and COM INPUT connectors to plus (+) and minus (–) output terminals respectively on dc voltage standard.

c. CHECK—Set M3 RANGE switch and dc voltage standard output to settings given in Table 4-12.

NOTE

Readout will be preceded by > symbol if INPUT voltage equals or exceeds M3 RANGE switch setting, except on 0.5 kV range; however, this will not affect accuracy of check.

TABLE 4-12
DC Voltage Accuracy

M3 RANGE Switch	DC Voltage Standard Output	Readout Limits	
		Min	Max (refer to preceding note)
2 V	2.00000 V	1.990 V	2.010 V
20 V	20.0000 V	19.90 V	20.10 V
200 V	200.000 V	199.0 V	201.0 V
0.5 kV	500.000 V	.495 kV	.505 kV

d. Set dc voltage standard output to zero volts.

e. Disconnect all test equipment.

f. Install both 7D12 side covers and indicator oscilloscope bottom panel.

This completes the calibration of the M3 RMS VOLTS MODULE.

REPLACEABLE ELECTRICAL PARTS

PARTS ORDERING INFORMATION

Replacement parts are available from or through your local Tektronix, Inc. Field Office or representative.

Changes to Tektronix instruments are sometimes made to accommodate improved components as they become available, and to give you the benefit of the latest circuit improvements developed in our engineering department. It is therefore important, when ordering parts, to include the following information in your order: Part number, instrument type or number, serial number, and modification number if applicable.

If a part you have ordered has been replaced with a new or improved part, your local Tektronix, Inc. Field Office or representative will contact you concerning any change in part number.

Change information, if any, is located at the rear of this manual.

SPECIAL NOTES AND SYMBOLS

X000	Part first added at this serial number
00X	Part removed after this serial number

ITEM NAME

In the Parts List, an Item Name is separated from the description by a colon (:). Because of space limitations, an Item Name may sometimes appear as incomplete. For further Item Name identification, the U.S. Federal Cataloging Handbook H6-1 can be utilized where possible.

ABBREVIATIONS

ACTR	ACTUATOR	PLSTC	PLASTIC
ASSY	ASSEMBLY	QTZ	QUARTZ
CAP	CAPACITOR	RECP	RECEPTACLE
CER	CERAMIC	RES	RESISTOR
CKT	CIRCUIT	RF	RADIO FREQUENCY
COMP	COMPOSITION	SEL	SELECTED
CONN	CONNECTOR	SEMICOND	SEMICONDUCTOR
ELCTLT	ELECTROLYTIC	SENS	SENSITIVE
ELEC	ELECTRICAL	VAR	VARIABLE
INCAND	INCANDESCENT	WW	WIREWOUND
LED	LIGHT EMITTING DIODE	XFMR	TRANSFORMER
NONWIR	NON WIREWOUND	XTAL	CRYSTAL

CROSS INDEX MFR. CODE NUMBER TO MANUFACTURER

MFR.CODE	MANUFACTURER	ADDRESS	CITY,STATE,ZIP
00853	SANGAMO ELECTRIC CO., S. CAROLINA DIV.	P. O. BOX 128	PICKENS, SC 29671
01121	ALLEN-BRADLEY CO.	1201 2ND ST. SOUTH	MILWAUKEE, WI 53204
04713	MOTOROLA, INC., SEMICONDUCTOR PRODUCTS DIV.	5005 E. MCDOWELL RD.	PHOENIX, AZ 85036
07263	FAIRCHILD SEMICONDUCTOR, A DIV. OF FAIRCHILD CAMERA AND INSTRUMENT CORP.	464 ELLIS ST.	MOUNTAIN VIEW, CA 94042
07910	TELEDYNE SEMICONDUCTOR	12515 CHADRON AVE.	HAWTHORNE, CA 90250
12040	NATIONAL SEMICONDUCTOR CORP.	COMMERCE DRIVE	DANBURY, CT 06810
14752	ELECTRO CUBE INC.	1710 S. DEL MAR AVE.	SAN GABRIEL, CA 91776
18324	SIGNETICS CORP.	811 E. ARQUES	SUNNYVALE, CA 94086
22229	SOLITRON DEVICES, INC., DIODES, INTEGRATED CIRCUITS AND CMOS	8808 BALBOA AVE.	SAN DIEGO, CA 92123
34371	HARRIS SEMICONDUCTOR, DIV. OF HARRIS-INTERTYPE CORP.	P. O. BOX 883	MELBOURNE, FL 32901
34553	AMPEREX ELECTRONIC CORP., COMPONENT DIV.	35 HOFFMAN AVE.	HAPPAUGE, NY 11787
56289	SPRAGUE ELECTRIC CO.		NORTH ADAMS, MA 01247
71590	CENTRALAB ELECTRONICS, DIV. OF GLOBE-UNION, INC.	5757 N. GREEN BAY AVE.	MILWAUKEE, WI 53201
72982	ERIE TECHNOLOGICAL PRODUCTS, INC.	644 W. 12TH ST.	ERIE, PA 16512
73138	BECKMAN INSTRUMENTS, INC., HELIPOT DIV.	2500 HARBOR BlVD.	FULLERTON, CA 92634
75042	TRW ELECTRONIC COMPONENTS, IRC FIXED RESISTORS, PHILADELPHIA DIVISION	401 N. BROAD ST.	PHILADELPHIA, PA 19108
80009	TEKTRONIX, INC.	P. O. BOX 500	BEAVERTON, OR 97077
80294	BOURNS, INC., INSTRUMENT DIV.	6135 MAGNOLIA AVE.	RIVERSIDE, CA 92506
80740	BECKMAN INSTRUMENTS, INC.	2500 HARBOR BlVD.	FULLERTON, CA 92634
86684	RCA CORP., ELECTRONIC COMPONENTS	415 S. 5TH ST.	HARRISON, NJ 07029
90201	MALLORY CAPACITOR CO., DIV. OF P. R. MALLORY CO., INC.	3029 E. WASHINGTON ST.	INDIANAPOLIS, IN 46206
91637	DALE ELECTRONICS, INC.	P. O. BOX 609	COLUMBUS, NB 68601

Ckt No.	Tektronix Part No.	Serial/Model No. Eff	Dscont	Name & Description	Mfr Code	Mfr Part Number
A1	670-2445-00			CKT BOARD ASSY:--RMS CONVERTER	80009	670-2445-00
A2	670-2446-00			CKT BOARD ASSY:--COUPLER	80009	670-2446-00
C6	285-1082-00			CAP.,FXD,PLSTC:0.47UF,20%,200V	14752	23081C474
C10	283-0637-00			CAP.,FXD,MICA D:20PF,2.5%,100V	00853	D151E200D0
C11	281-0064-00			CAP.,VAR,PLSTC:0.25-1.5PF,600V	72982	530-002
C12	283-0668-00			CAP.,FXD,MICA D:184PF,1%,500V	00853	D155P1840P0
C14	281-0717-00			CAP.,FXD,CER DI:7.8PF,+/-0.1PF,50DV	72982	374-005CDG789F
C15	281-0064-00			CAP.,VAR,PLSTC:0.25-1.5PF,600V	72982	530-002
C16	283-0623-00			CAP.,FXD,MICA D:1200PF,1%,100V	00853	D191F122F0
C19	281-0064-00			CAP.,VAR,PLSTC:0.25-1.5PF,600V	72982	530-002
C20	285-0627-00			CAP.,FXD,PLSTC:0.0033UF,5%,100V	56289	410P33251
C24	283-0111-00			CAP.,FXD,CER DI:0.1UF,20%,50V	72982	8131N075651104M
C25	281-0617-00			CAP.,FXD,CER DI:15PF,10%,200V	72982	374-001C0G0150K
C26	281-0513-00			CAP.,FXD,CER DI:27PF,+/-5.4PF,500V	72982	301-000P2G0270M
C27	283-0111-00			CAP.,FXD,CER DI:0.1UF,20%,50V	72982	8131N075651104M
C33	281-0549-00			CAP.,FXD,CER DI:68PF,10%,500V	72982	301-000U2J0680K
C34	283-0111-00			CAP.,FXD,CER DI:0.1UF,20%,50V	72982	8131N075651104M
C35	281-0513-00			CAP.,FXD,CER DI:27PF,+/-5.4PF,500V	72982	301-000P2G0270M
C36	281-0651-00			CAP.,FXD,CER DI:47PF,5%,200V	72982	374-001T2H0470J
C46	283-0251-00			CAP.,FXD,CER DI:87 PF,5%,100V	72982	8121N116C0G870J
C51	283-0059-00			CAP.,FXD,CER DI:1UF,+80-20%,25V	72982	8141N038651105Z
C52	290-0536-00			CAP.,FXD,ELCTLT:10UF,20%,25V	90201	TDC106M025NLF
C62	283-0111-00			CAP.,FXD,CER DI:0.1UF,20%,50V	72982	8131N075651104M
C78	283-0198-00			CAP.,FXD,CER DI:0.22UF,20%,50V	72982	8131N075651224M
C101	281-0536-00			CAP.,FXD,CER DI:1000PF,10%,500V	72982	301-055X5P0102K
C126	283-0081-00			CAP.,FXD,CER DI:0.1UF,+80-20%,25V	56289	36C600
C128	283-0638-00			CAP.,FXD,MICA D:130PF,1%,100V	00853	D151E131F0
C134	283-0638-00			CAP.,FXD,MICA D:130PF,1%,100V	00853	D151E131F0
C138	283-0081-00			CAP.,FXD,CER DI:0.1UF,+80-20%,25V	56289	36C600
C142	283-0081-00			CAP.,FXD,CER DI:0.1UF,+80-20%,25V	56289	36C600
C148	283-0081-00			CAP.,FXD,CER DI:0.1UF,+80-20%,25V	56289	36C600
C150	281-0546-00			CAP.,FXD,CER DI:330PF,10%,500V	72982	301-000X5P0331K
C152	281-0184-00			CAP.,VAR,PLSTC:2-18PF,500VDC	34553	2222-809-09003
C155	281-0615-00			CAP.,FXD,CER DI:3.9PF,+/-0.5PF,200V	72982	374-001C0J0399D
C159	281-0540-00			CAP.,FXD,CER DI:51PF,5%,500V	72982	301-000U2J0510J
C170	283-0178-00			CAP.,FXD,CER DI:0.1UF,+80-20%,100V	72982	8131N145651104Z
C172	283-0081-00			CAP.,FXD,CER DI:0.1UF,+80-20%,25V	56289	36C600
C174	283-0081-00			CAP.,FXD,CER DI:0.1UF,+80-20%,25V	56289	36C600
C176	283-0178-00			CAP.,FXD,CER DI:0.1UF,+80-20%,100V	72982	8131N145651104Z
CR22	152-0246-00			SEMICOND DEVICE:SILICON,400PIV,200MA	07910	CD12676
CR23	152-0246-00			SEMICOND DEVICE:SILICON,400PIV,200MA	07910	CD12676
CR30	152-0246-00			SEMICOND DEVICE:SILICON,400PIV,200MA	07910	CD12676
CR40	152-0246-00			SEMICOND DEVICE:SILICON,400PIV,200MA	07910	CD12676
CR50	152-0141-02			SEMICOND DEVICE:SILICON,30V,150MA	07910	1N4152
CR51	152-0141-02			SEMICOND DEVICE:SILICON,30V,150MA	07910	1N4152
CR52	152-0141-02			SEMICOND DEVICE:SILICON,30V,150MA	07910	1N4152
CR62	152-0141-02			SEMICOND DEVICE:SILICON,30V,150MA	07910	1N4152
CR98	152-0141-02			SEMICOND DEVICE:SILICON,30V,150MA	07910	1N4152
CR101	152-0246-00			SEMICOND DEVICE:SILICON,400PIV,200MA	07910	CD12676
CR102	152-0246-00			SEMICOND DEVICE:SILICON,400PIV,200MA	07910	CD12676
L152	108-0443-00			COIL,RF:25UH	80009	108-0443-00

Ckt No.	Tektronix Part No.	Serial/Model No. Eff	Dscont	Name & Description	Mfr Code	Mfr Part Number
L158	108-0443-00			COIL,RF:25UH	80009	108-0443-00
Q29	151-0302-00			TRANSISTOR:SILICON,NPN	04713	2N2222A
Q31	151-0190-00			TRANSISTOR:SILICON,NPN	80009	151-0190-00
Q39	151-0302-00			TRANSISTOR:SILICON,NPN	04713	2N2222A
Q48A,B	151-0309-00			TRANSISTOR:SILICON,NPN,DUAL	07263	SP13378
Q50A,B	151-0309-00			TRANSISTOR:SILICON,NPN,DUAL	07263	SP13378
Q60	151-0188-00			TRANSISTOR:SILICON,PNP	04713	2N3906
Q67	151-0188-00			TRANSISTOR:SILICON,PNP	04713	2N3906
Q99	151-0190-00			TRANSISTOR:SILICON,NPN	80009	151-0190-00
Q103A,B	151-1054-00			TRANSISTOR:SILICON,JFE,N-CHANNEL,DUAL	22229	FD1644
Q109	151-0333-00			TRANSISTOR:SILICON,NPN,SEL FROM MPS918	80009	151-0333-00
Q113	151-0220-00			TRANSISTOR:SILICON,PNP	80009	151-0220-00
Q103A,B	151-0232-00			TRANSISTOR:SILICON,NPN,DUAL	12040	NS7348
R10, R12	325-0151-00			RES.,MATCHED:900K/100K OHM,0.1%,0.125W	80009	325-0151-00
R14, R16	315-0152-00			RES.,FXD,CMPSN:1.5K OHM,5%,0.25W	01121	CB1525
R18, R20	325-0153-00			RES.,FXD,FILM:999K OHM,/1K OHM,0.1%	80009	325-0153-00
R22	305-0203-00			RES.,FXD,CMPSN:20K OHM,5%,2W	01121	HB2035
R27	311-0613-00			RES.,VAR,NONWIR:100K OHM,10%,0.50W	80740	62-63-3
R33	321-0929-07			RES.,FXD,FILM:2.5K OHM,0.10%,0.125W	91637	MFF1816C25000B
R37	311-0613-00			RES.,VAR,NONWIR:100K OHM,10%,0.50W	80740	62-63-3
R52	321-0986-07			RES.,FXD,FILM:25K OHM,0.1%,0.125W	75042	CEAT9-2502B
R55	315-0243-00			RES.,FXD,CMPSN:24K OHM,5%,0.25W	01121	CB2435
R57	315-0511-00			RES.,FXD,CMPSN:510 OHM,5%,0.25W	01121	CB5115
R58	321-0193-07			RES.,FXD,FILM:1K OHM,0.1%,0.125W	75042	CEAT9-1001B
R62	315-0621-00			RES.,FXD,CMPSN:620 OHM,5%,0.25W	01121	CB6215
R66	311-1319-00			RES.,VAR,NONWIR:10K OHM,10%,0.75W	01121	4SP103
R68	321-0289-07			RES.,FXD,FILM:10K OHM,0.1%,0.125W	75042	CEAT9-1002B
R69	321-0289-07			RES.,FXD,FILM:10K OHM,0.1%,0.125W	75042	CEAT9-1002B
R71	321-0289-07			RES.,FXD,FILM:10K OHM,0.1%,0.125W	75042	CEAT9-1002B
R73	321-0289-07			RES.,FXD,FILM:10K OHM,0.1%,0.125W	75042	CEAT9-1002B
R76	311-0607-00			RES.,VAR,NONWIR:10K OHM,10%,0.50W	80740	62-59-3
R78	315-0104-00			RES.,FXD,CMPSN:100K OHM,5%,0.25W	01121	CB1045
R80	315-0154-00			RES.,FXD,CMPSN:150K OHM,5%,0.25W	01121	CB1545
R81	315-0753-00			RES.,FXD,CMPSN:75K OHM,5%,0.25W	01121	CB7535
R82	321-0356-00			RES.,FXD,FILM:49.9K OHM,1%,0.125W	75042	CEAT0-4992F
R83	321-0327-00			RES.,FXD,FILM:24.9K OHM,1%,0.125W	75042	CEAT0-2492F
R85	321-0327-00			RES.,FXD,FILM:24.9K OHM,1%,0.125W	75042	CEAT0-2492F
R86	321-0356-00			RES.,FXD,FILM:49.9K OHM,1%,0.125W	75042	CEAT0-4992F
R88	315-0753-00			RES.,FXD,CMPSN:75K OHM,5%,0.25W	01121	CB7535
R89	321-0344-00			RES.,FXD,FILM:37.4K OHM,1%,0.125W	75042	CEAT0-3742F
R90	315-0154-00			RES.,FXD,CMPSN:150K OHM,5%,0.25W	01121	CB1545
R91	315-0154-00			RES.,FXD,CMPSN:150K OHM,5%,0.25W	01121	CB1545
R93	315-0154-00			RES.,FXD,CMPSN:150K OHM,5%,0.25W	01121	CB1545
R94	321-0356-00			RES.,FXD,FILM:49.9K OHM,1%,0.125W	75042	CEAT0-4992F
R95	315-0753-00			RES.,FXD,CMPSN:75K OHM,5%,0.25W	01121	CB7535
R96	315-0753-00			RES.,FXD,CMPSN:75K OHM,5%,0.25W	01121	CB7535
R97	321-0344-00			RES.,FXD,FILM:37.4K OHM,1%,0.125W	75042	CEAT0-3742F
R98	315-0154-00			RES.,FXD,CMPSN:150K OHM,5%,0.25W	01121	CB1545
R101	301-0204-00			RES.,FXD,CMPSN:200K OHM,5%,0.50W	01121	EB2045

Ckt No.	Tektronix Part No.	Serial/Model No. Eff	Dscont	Name & Description	Mfr Code	Mfr Part Number
R105	321-0114-00			RES.,FXD,FILM:150 OHM,1%,0.125W	75042	CEAT0-1500F
R107	321-0114-00			RES.,FXD,FILM:150 OHM,1%,0.125W	75042	CEAT0-1500F
R109	315-0301-00			RES.,FXD,CMPSN:300 OHM,5%,0.25W	01121	CB3015
R111	315-0302-00			RES.,FXD,CMPSN:3K OHM,5%,0.25W	01121	CB3025
R113	315-0152-00			RES.,FXD,CMPSN:1.5K OHM,5%,0.25W	01121	CB1525
R115	315-0301-00			RES.,FXD,CMPSN:300 OHM,5%,0.25W	01121	CB3015
R117	311-1265-00			RES.,VAR,NONWIR:2K OHM,10%,0.50W	80294	3329P-L58-202
R118	321-0215-00			RES.,FXD,FILM:1.69K OHM,1%,0.125W	75042	CEAT0-1691F
R119	321-0385-00			RES.,FXD,FILM:100K OHM,1%,0.125W	75042	CEAT0-1003F
R121	311-1268-00			RES.,VAR,NONWIR:10K OHM,10%,0.50W	73138	62PT-351-0
R123	321-0114-00			RES.,FXD,FILM:150 OHM,1%,0.125W	75042	CEAT0-1500F
R126	315-0201-00			RES.,FXD,CMPSN:200 OHM,5%,0.25W	01121	CB2015
R128	315-0201-00			RES.,FXD,CMPSN:200 OHM,5%,0.25W	01121	CB2015
R130	315-0301-00			RES.,FXD,CMPSN:300 OHM,5%,0.25W	01121	CB3015
R132	315-0301-00			RES.,FXD,CMPSN:300 OHM,5%,0.25W	01121	CB3015
R134	315-0201-00			RES.,FXD,CMPSN:200 OHM,5%,0.25W	01121	CB2015
R137	315-0202-00			RES.,FXD,CMPSN:2K OHM,5%,0.25W	01121	CB2025
R138	315-0201-00			RES.,FXD,CMPSN:200 OHM,5%,0.25W	01121	CB2015
R139	315-0202-00			RES.,FXD,CMPSN:2K OHM,5%,0.25W	01121	CB2025
R142	315-0202-00			RES.,FXD,CMPSN:2K OHM,5%,0.25W	01121	CB2025
R148	315-0202-00			RES.,FXD,CMPSN:2K OHM,5%,0.25W	01121	CB2025
R150	315-0102-00			RES.,FXD,CMPSN:1K OHM,5%,0.25W	01121	CB1025
R154	321-0134-00			RES.,FXD,FILM:243 OHM,1%,0.125W	75042	CEAT0-2430F
R156	321-0254-00			RES.,FXD,FILM:4.32K OHM,1%,0.125W	75042	CEAT0-4321F
R158	321-0193-00			RES.,FXD,FILM:1K OHM,1%,0.125W	75042	CEAT0-1001F
R160	321-0163-00			RES.,FXD,FILM:487 OHM,1%,0.125W	75042	CEAT0-4870F
R161	321-0071-00			RES.,FXD,FILM:53.6 OHM,1%,0.125W	75042	CEAT0-53R6F
R162	315-0510-00			RES.,FXD,CMPSN:51 OHM,5%,0.25W	01121	CB5105
R165	315-0623-00			RES.,FXD,CMPSN:62K OHM,5%,0.25W	01121	CB6235
R167	315-0682-00			RES.,FXD,CMPSN:6.8K OHM,5%,0.25W	01121	CB6825
R168	315-0104-00			RES.,FXD,CMPSN:100K OHM,5%,0.25W	01121	CB1045
S6	260-1208-00			SWITCH,PUSH:DPDT	71590	2KAB010000-359
S20	263-1033-00			ACTR ASSY,CAM S:--RANGE	80009	263-1033-00
S165	260-1208-00			SWITCH,PUSH:DPDT	71590	2KAB010000-359
T125	120-0858-00			XFMR,POT CORE:MODULATOR,T-125	80009	120-0858-00
T145	120-0859-00			XFMR,POT CORE:MODULATOR,T-145	80009	120-0859-00
U25	156-0317-00			MICROCIRCUIT,DI:OPERATIONAL AMPLIFLER	34371	HA2-2625-5
U35	156-0317-00			MICROCIRCUIT,DI:OPERATIONAL AMPLIFLER	34371	HA2-2625-5
U41	156-0068-00			INTEGRATED CKT:5 NPN XSTR ARRAY CA3045	86684	80364
U45	156-0317-02			INTEGRATED CKT:OPNL AMPL,SEL	80009	156-0317-02
U55	156-0158-00			MICROCIRCUIT,LI:DUAL OPERATIONAL AMPLIFIER	18324	S5558V
U65	156-0067-08			INTEGRATED CKT:OPERATIONAL AMPL,UA741C,SEL	80009	156-0067-08
U75	156-0067-00			MICROCIRCUIT,LI:OPERATIONAL AMPLIFIER	80009	156-0067-00
U142	156-0106-00			INTEGRATED CKT:ML 6 DIODE ARRAY,RCA3039	86684	CA3039
U148	156-0106-00			INTEGRATED CKT:ML 6 DIODE ARRAY,RCA3039	86684	CA3039
U155	156-0317-00			MICROCIRCUIT,DI:OPERATIONAL AMPLIFLER	34371	HA2-2625-5
VR63	152-0437-00			SEMICOND DEVICE:ZENER,8.2V,5%,0.4W,1N959	80009	152-0437-00
Y136	158-0031-01			XTAL UNIT,QTZ:10MHZ,0.01%	80009	158-0031-01

DIAGRAMS AND CIRCUIT BOARD ILLUSTRATIONS

Symbols and Reference Designators

Electrical components shown on the diagrams are in the following units unless noted otherwise:

Capacitors = Values one or greater are in picofarads (pF).
Values less than one are in microfarads (μF).
Resistors = Ohms (Ω).

Symbols used on the diagrams are based on USA Standard Y32.2-1967.

Logic symbology is based on MIL-STD-806B in terms of positive logic. Logic symbols depict the logic function performed and may differ from the manufacturer's data.

The following prefix letters are used as reference designators to identify components or assemblies on the diagrams.

A	Assembly, separable or repairable (circuit board, etc.)	H	Heat dissipating device (heat sink, heat radiator, etc.)	RT	Thermistor
AT	Attenuator, fixed or variable	HR	Heater	S	Switch
B	Motor	HY	Hybrid circuit	T	Transformer
BT	Battery	J	Connector, stationary portion	TC	Thermocouple
C	Capacitor, fixed or variable	K	Relay	TP	Test point
CB	Circuit breaker	L	Inductor, fixed or variable	U	Assembly, inseparable or non-repairable (integrated circuit, etc.)
CR	Diode, signal or rectifier	LR	Inductor/resistor combination	V	Electron tube
DL	Delay line	M	Meter	VR	Voltage regulator (zener diode, etc.)
DS	Indicating device (lamp)	P	Connector, movable portion	Y	Crystal
E	Spark Gap	Q	Transistor or silicon-controlled rectifier	Z	Phase shifter
F	Fuse				
FL	Filter	R	Resistor, fixed or variable		

The following special symbols are used on the diagrams:

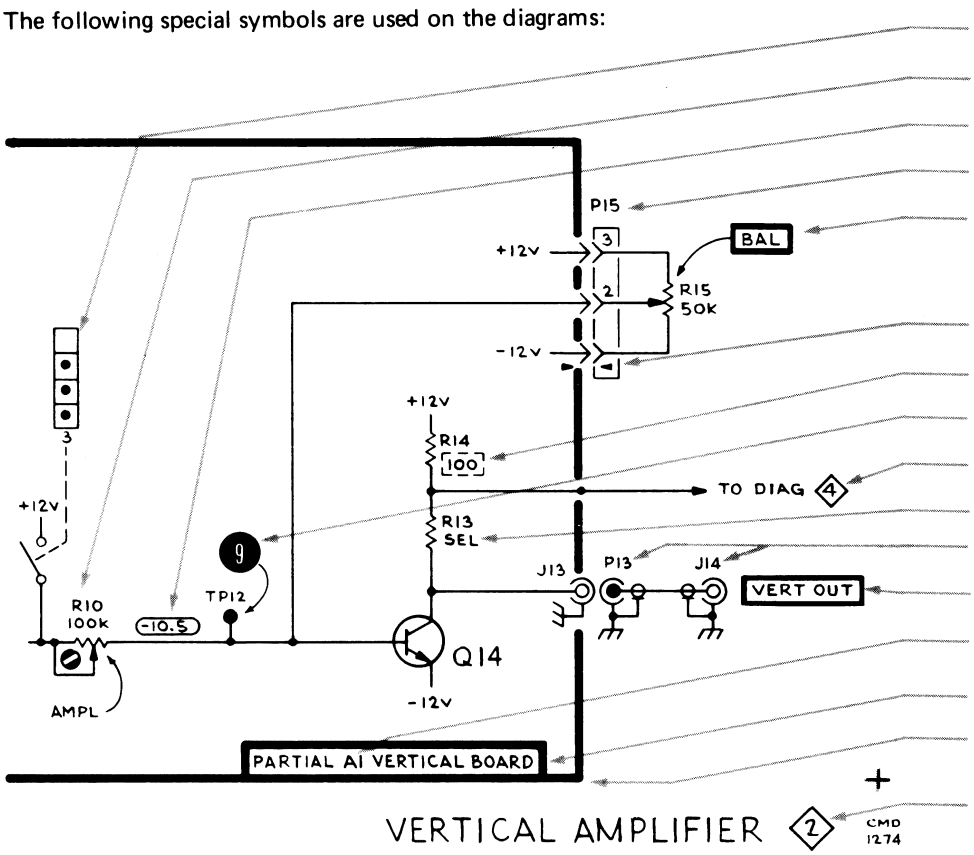

Cam Switch Closure Chart

Internal Screwdriver Adjustment

Test Voltage

Plug to E.C. Board

Panel Adjustment

Plug Index

Modified Component—See Parts List

Refer to Waveform

Refer to Diagram Number

SEL Value Selected at Factory

Coaxial Connector

Panel Connector

Assembly Number

Board Name

Etched Circuit Board Outlined in Black

Schematic Name and Number

@

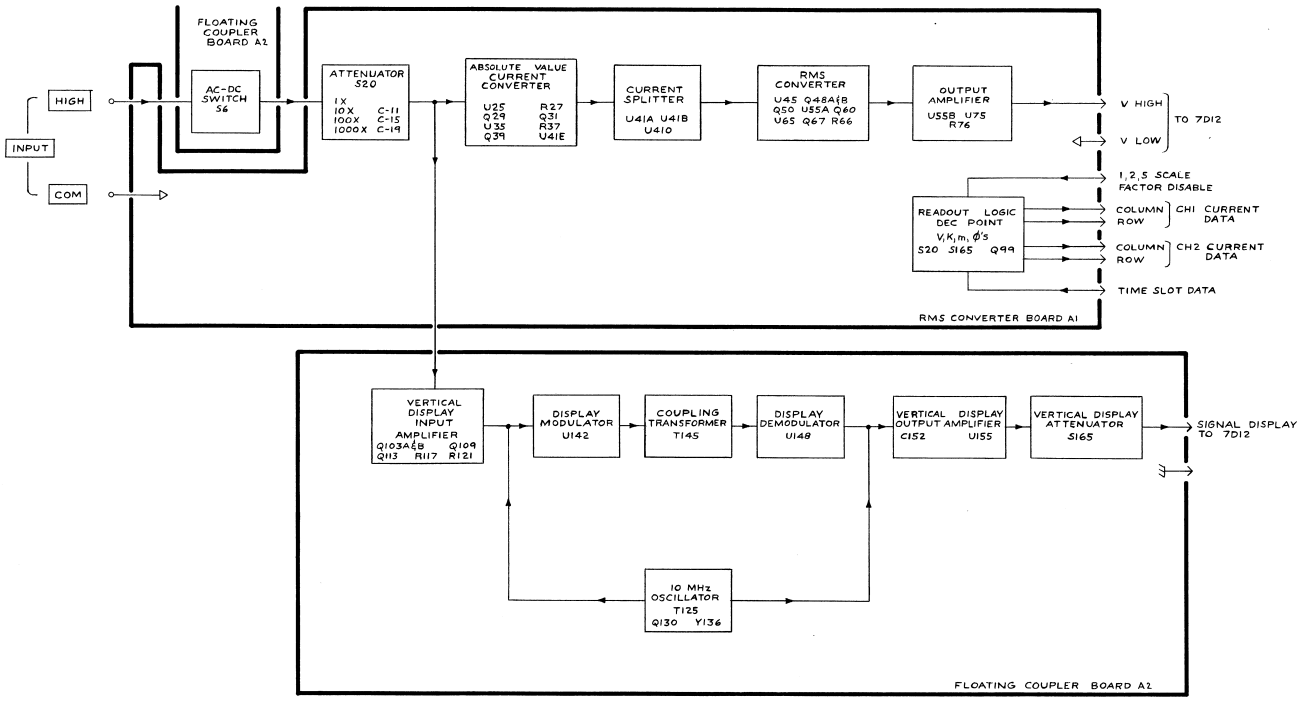

M 3

FIG. 7-1. BLOCK DIAGRAM

1513-04

@

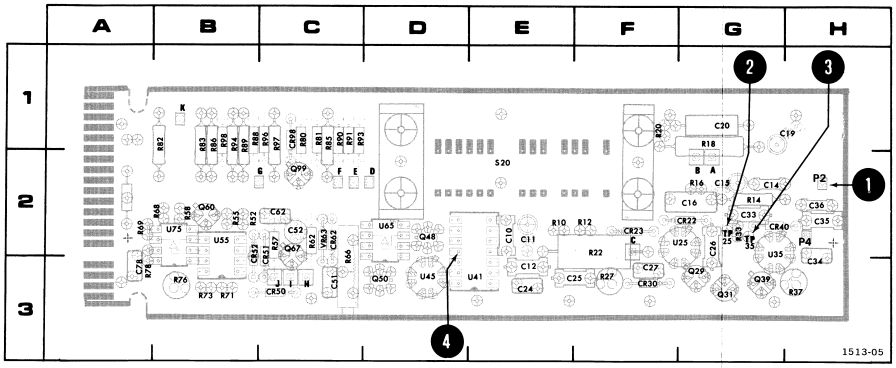

Fig. 7-2. A1—RMS Converter board.

CKT NO	GRID LOC	CKT NO	GRID LOC	CKT NO	GRID LOC	CKT NO	GRID LOC	CKT NO	GRID LOC
C10	2E	CR22	2G	Q99	2C	R71	3B	S20	2E
C11	2E	CR23	2F			R73	3B		
C12	3E	CR30	3F	R10	2E	R76	3B	TP25	2G
C14	2G	CR40	2G	R12	2F	R78	3A	TP35	2G
C15	2G	CR50	3C	R14	2G	R80	1C		
C16	2G	CR51	2C	R16	2G	R81	1C	U25	2G
C19	1H	CR52	2B	R18	1G	R82	1B	U35	2G
C20	1G	CR62	2C	R20	1F	R83	1B	U41	3E
C24	3E	CR98	1C	R22	2F	R85	1C	U45	3D
C25	3F			R27	3F	R86	1B	U55	2B
C26	2G	P2	2H	R33	2G	R88	1B	U65	2D
C27	3F	P4	2H	R37	3H	R89	1B	U75	2B
C33	2G			R52	2B	R90	1C		
C34	3H	Q29	3G	R55	2B	R91	1C	VR63	2C
C35	2H	Q31	3G	R57	2C	R93	1C		
C36	2H	Q39	3G	R58	2B	R94	1B		
C51	3C	Q48	2D	R62	2C	R96	1C		
C52	2C	Q50	3D	R66	3C	R97	1C		
C62	2C	Q60	2B	R68	2A	R98	1B		
C78	3A	Q67	2C	R69	2B				

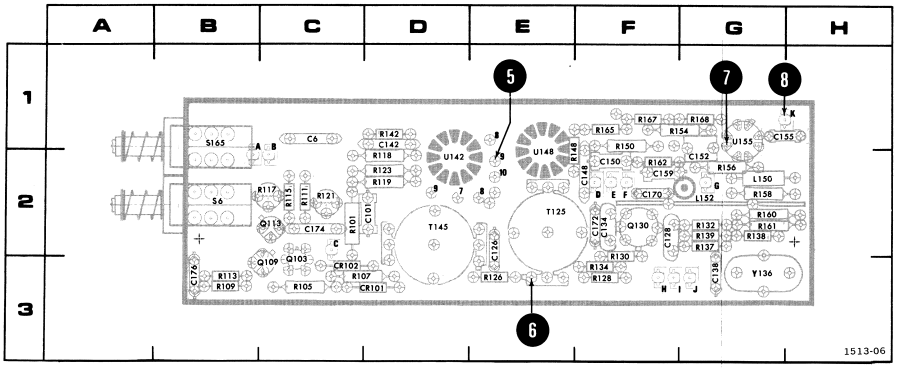

Fig. 7-3. A2—Floating Coupler board.

CKT NO	GRID LOC	CKT NO	GRID LOC	CKT NO	GRID LOC	CKT NO	GRID LOC	CKT NO	GRID LOC
C6	1C	CR101	3D	R113	3B	R148	2E	T145	2D
C101	2D	CR102	3C	R115	2C	R150	1F		
C126	2E			R117	2C	R154	1F	U142	2D
C128	2F	L150	2G	R118	2D	R156	2G	U148	2E
C134	2F	L152	2G	R119	2D	R158	2G	U155	1G
C138	3G			R121	2C	R160	2G		
C142	1D	Q103	3C	R123	2D	R161	2G	Y136	3G
C148	2F	Q109	3C	R126	3E	R162	2F		
C150	2F	Q113	2C	R128	3F	R165	1F		
C152	2G	Q130	2F	R130	3F	R167	1F		
C155	1H			R132	2G	R168	1G		
C159	2F	R101	2C	R134	3F				
C170	2F	R105	3C	R137	2G	S6	2B		
C172	2F	R107	3C	R138	2G	S165	1B		
C174	2C	R109	3B	R139	2G				
C176	3B	R111	2C	R142	1D	T125	2E		

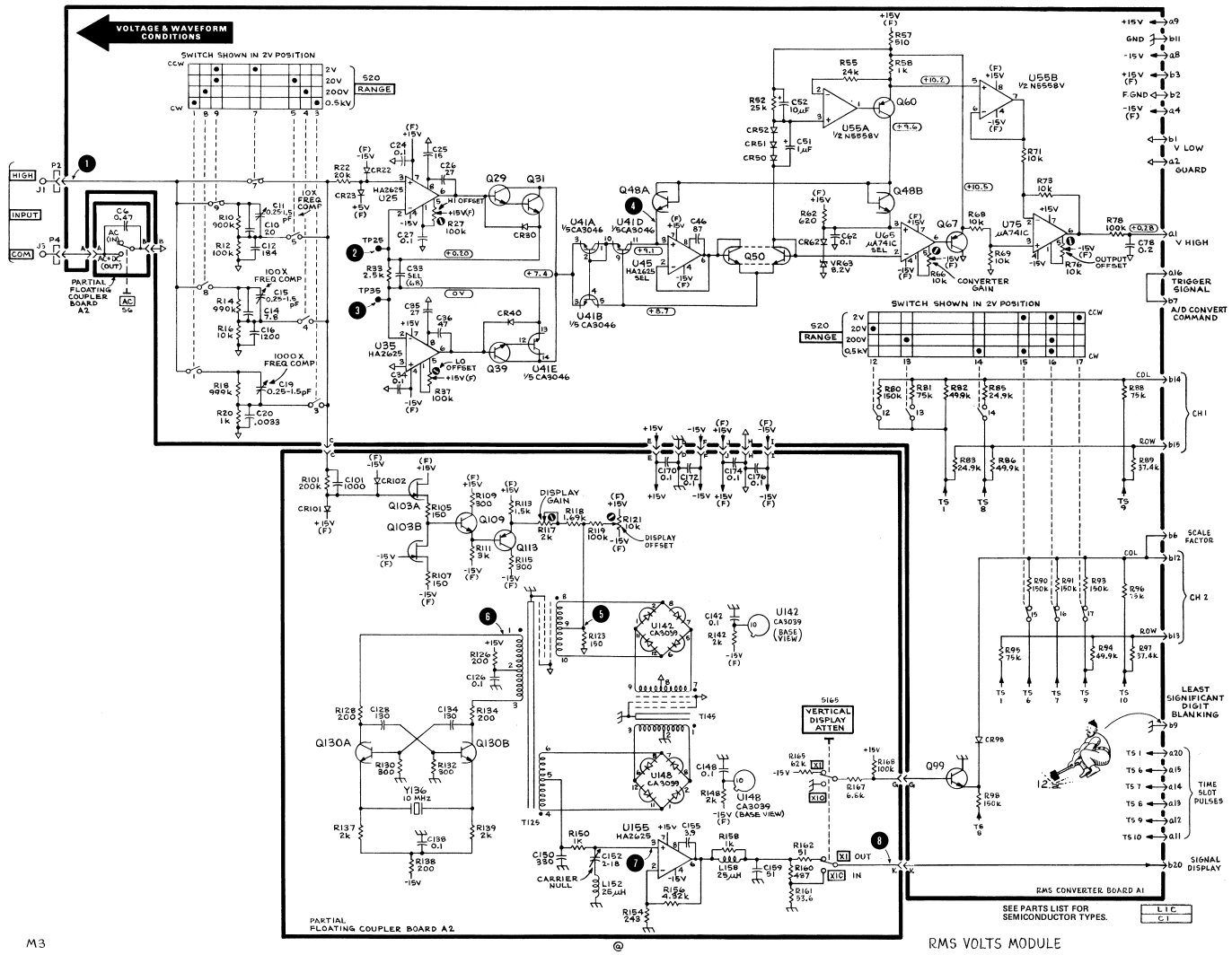

M3

RMS VOLTS MODULE

VOLTAGE AND WAVEFORM CONDITIONS

The voltages and waveforms shown on this diagram were obtained by using the test conditions and equipment listed below. Voltages and waveforms are not absolute and may vary between instruments.

Recommended Test Equipment

Item	Specification		Recommended Type
Test Oscilloscope System	Bandwidth	Dc to 65 MHz.	Tektronix 7603 Oscilloscope with 7A15A Amplifier, 7B53A Dual Time Base, and P6053B Probe; or equivalent.
	Deflection Factor	5 mV to 5 V.	
	Sweep Rate	To 0.5 μs/div.	
	Input Impedance	10 MΩ.	
	Probe	10X, fast rise.	
Voltmeter	Input impedance	10 MΩ.	Tektronix 7D12 with M1 Module; or Tektronix DM501 with TM500-series Power Module.
	Range	To 200 V dc.	
Plug-in Extender	Allows Tektronix 7000-series plug-ins to be extended from the oscilloscope mainframe.		Tektronix Part 067-0589-00 (rigid) or 067-0616-00 (flexible).

Control Settings

M3	RANGE	2 V
	VERTICAL DISPLAY ATTEN	OUT 1X
	Coupling	OUT AC + DC
7D12	Vertical Display Atten	1X
	Vertical Display Position	To center waveform
	Triggering	Auto
	Gate	Out - off

A 400-millivolt, 1 kilohertz square-wave signal is applied to the M3 INPUT connectors (COM connected to chassis ground). The test oscilloscope input is ac coupled. All voltages are referenced to chassis ground.

@

1
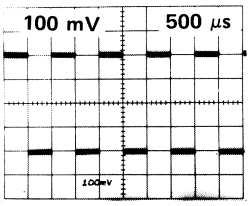

2
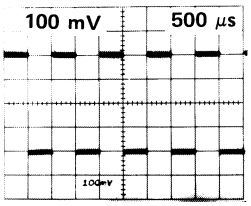

3
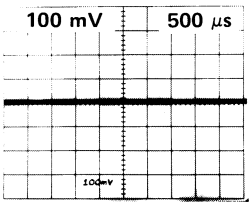

4
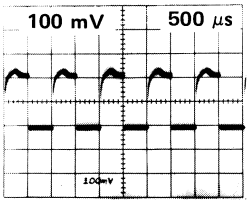

5
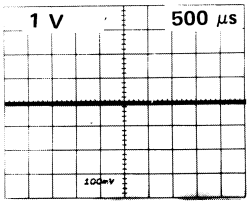

6
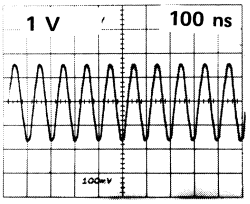

7
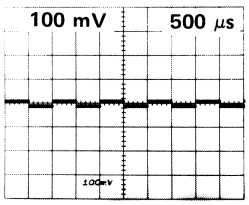

8
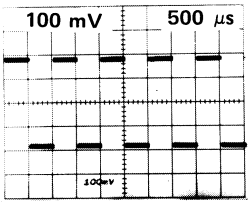

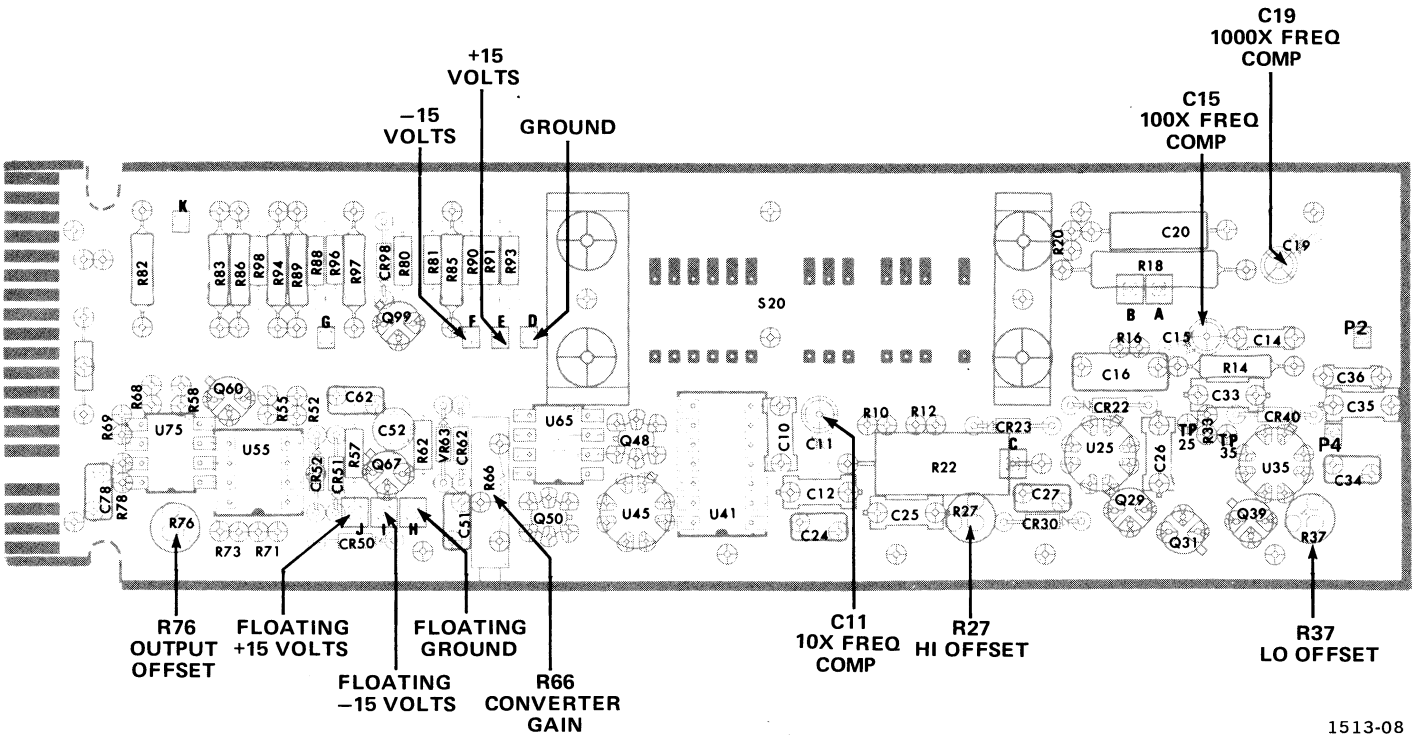

Fig. 7-5. A1—RMS Converter board.

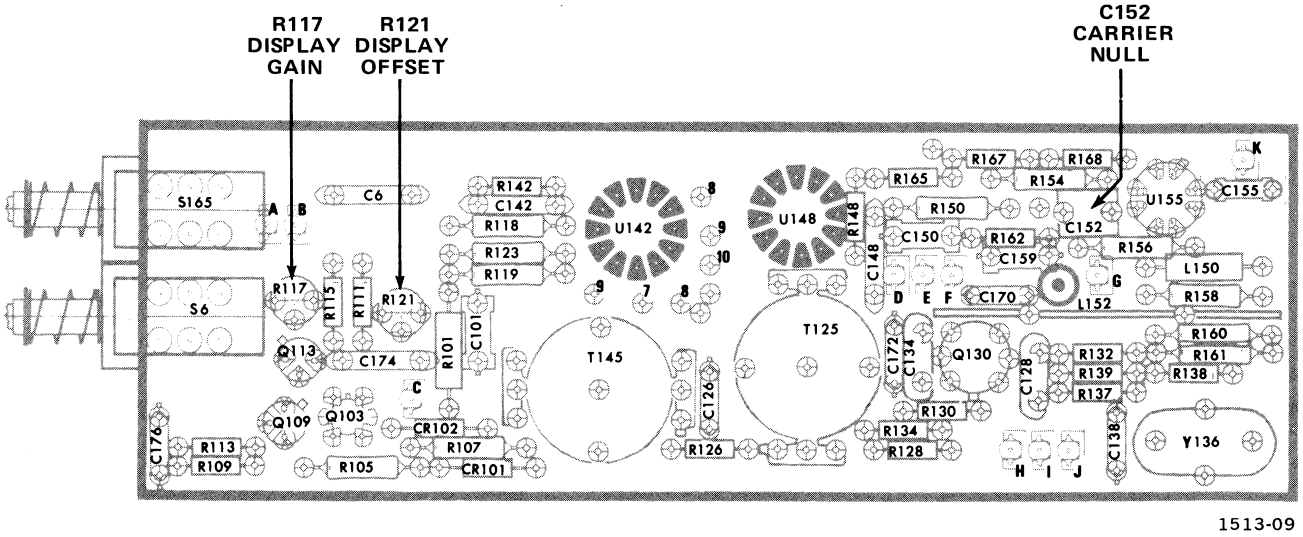

Fig. 7-6. A2—Floating Coupler board.

@

REPLACEABLE MECHANICAL PARTS

PARTS ORDERING INFORMATION

Replacement parts are available from or through your local Tektronix, Inc. Field Office or representative.

Changes to Tektronix instruments are sometimes made to accommodate improved components as they become available, and to give you the benefit of the latest circuit improvements developed in our engineering department. It is therefore important, when ordering parts, to include the following information in your order: Part number, instrument type or number, serial number, and modification number if applicable.

If a part you have ordered has been replaced with a new or improved part, your local Tektronix, Inc. Field Office or representative will contact you concerning any change in part number.

Change information, if any, is located at the rear of this manual.

SPECIAL NOTES AND SYMBOLS

X000	Part first added at this serial number
00X	Part removed after this serial number

FIGURE AND INDEX NUMBERS

Items in this section are referenced by figure and index numbers to the illustrations.

INDENTATION SYSTEM

This mechanical parts list is indented to indicate item relationships. Following is an example of the indentation system used in the description column.

1 2 3 4 5 Name & Description

Assembly and/or Component
Attaching parts for Assembly and/or Component
- - - * - - -
Detail Part of Assembly and/or Component
Attaching parts for Detail Part
- - - * - - -
Parts of Detail Part
Attaching parts for Parts of Detail Part
- - - * - - -

Attaching Parts always appear in the same indentation as the item it mounts, while the detail parts are indented to the right. Indented items are part of, and included with, the next higher indentation. The separation symbol - - - * - - - indicates the end of attaching parts.

Attaching parts must be purchased separately, unless otherwise specified.

ITEM NAME

In the Parts List, an Item Name is separated from the description by a colon (:). Because of space limitations, an Item Name may sometimes appear as incomplete. For further Item Name identification, the U.S. Federal Cataloging Handbook H6-1 can be utilized where possible.

ABBREVIATIONS

"	INCH
#	NUMBER SIZE
ACTR	ACTUATOR
ADPTR	ADAPTER
ALIGN	ALIGNMENT
AL	ALUMINUM
ASSEM	ASSEMBLED
ASSY	ASSEMBLY
ATTEN	ATTENUATOR
AWG	AMERICAN WIRE GAGE
BD	BOARD
BRKT	BRACKET
BRS	BRASS
BRZ	BRONZE
BSHG	BUSHING
CAB	CABINET
CAP	CAPACITOR
CER	CERAMIC
CHAS	CHASSIS
CKT	CIRCUIT
COMP	COMPOSITION
CONN	CONNECTOR
COV	COVER
CPLG	COUPLING
CRT	CATHODE RAY TUBE
DEG	DEGREE
DWR	DRAWER
ELCTRN	ELECTRON
ELEC	ELECTRICAL
ELCTLT	ELECTROLYTIC
ELEM	ELEMENT
EPL	ELECTRICAL PARTS LIST
EQPT	EQUIPMENT
EXT	EXTERNAL
FIL	FILLISTER HEAD
FLEX	FLEXIBLE
FLH	FLAT HEAD
FLTR	FILTER
FR	FRAME or FRONT
FSTNR	FASTENER
FT	FOOT
FXD	FIXED
GSKT	GASKET
HDL	HANDLE
HEX	HEXAGON
HEX HD	HEXAGONAL HEAD
HEX SOC	HEXAGONAL SOCKET
HLCPS	HELICAL COMPRESSION
HLEXT	HELICAL EXTENSION
HV	HIGH VOLTAGE
IC	INTEGRATED CIRCUIT
ID	INSIDE DIAMETER
IDENT	IDENTIFICATION
IMPLR	IMPELLER
IN	INCH
INCAND	INCANDESCENT
INSUL	INSULATOR
INTL	INTERNAL
LPHLDR	LAMPHOLDER
MACH	MACHINE
MECH	MECHANICAL
MTG	MOUNTING
NIP	NIPPLE
NON WIRE	NOT WIRE WOUND
OBD	ORDER BY DESCRIPTION
OD	OUTSIDE DIAMETER
OVH	OVAL HEAD
PH BRZ	PHOSPHOR BRONZE
PL	PLAIN or PLATE
PLSTC	PLASTIC
PN	PART NUMBER
PNH	PAN HEAD
PWR	POWER
RCPT	RECEPTACLE
RES	RESISTOR
RGD	RIGID
RLF	RELIEF
RTNR	RETAINER
SCH	SOCKET HEAD
SCOPE	OSCILLOSCOPE
SCR	SCREW
SE	SINGLE END
SECT	SECTION
SEMICOND	SEMICONDUCTOR
SHLD	SHIELD
SHLDR	SHOULDERED
SKT	SOCKET
SL	SLIDE
SLFLKG	SELF-LOCKING
SLVG	SLEEVING
SPR	SPRING
SQ	SQUARE
SST	STAINLESS STEEL
STL	STEEL
SW	SWITCH
T	TUBE
TERM	TERMINAL
THD	THREAD
THK	THICK
TNSN	TENSION
TPG	TAPPING
TRH	TRUSS HEAD
V	VOLTAGE
VAR	VARIABLE
W/	WITH
WSHR	WASHER
XFMR	TRANSFORMER
XSTR	TRANSISTOR

CROSS INDEX MFR. CODE NUMBER TO MANUFACTURER

MFR.CODE	MANUFACTURER	ADDRESS	CITY,STATE,ZIP
0000C	GETTIG ENGINEERING AND MANUFACTURING CO.		SPRINGMILL, PA 16875
00779	AMP, INC.	P. O. BOX 3608	HARRISBURG, PA 17105
22526	BERG ELECTRONICS, INC.	YOUK EXPRESSWAY	NEW CUMBERLAND, PA 17070
70276	ALLEN MFG. CO.	P. O. DRAWER 570	HARTFORD, CT 06101
71590	CENTRALAB ELECTRONICS, DIV. OF GLOBE-UNION, INC.	5757 N. GREEN BAY AVE.	MILWAUKEE, WI 53201
73743	FISCHER SPECIAL MFG. CO.	446 MORGAN ST.	CINCINNATI, OH 45206
74445	HOLO-KROME CO.	31 BROOK ST. WEST	HARTFORD, CT 06110
78189	ILLINOIS TOOL WORKS, INC. SHAKEPROOF DIVISION	ST. CHARLES ROAD	ELGIN, IL 60120
79136	WALDES, KOHINOOR, INC.	47-16 AUSTEL PLACE	LONG ISLAND CITY, NY 11101
80009	TEKTRONIX, INC.	P. O. BOX 500	BEAVERTON, OR 97077
83385	CENTRAL SCREW CO.	2530 CRESCENT DR.	BROADVIEW, IL 60153

Fig. & Index No.	Tektronix Part No.	Serial/Model No. Eff	Dscont	Qty	1 2 3 4 5 Name & Description	Mfr Code	Mfr Part Number
1-1	337-1910-00			2	SHIELD,ELEC:LEFT AND RIGHT SIDE	80009	337-1910-00
					(ATTACHING PARTS FOR EACH)		
-2	213-0138-00			1	SCR,TPG,THD FOR:4-40 X 0.188 INCH,PNH STL	83385	OBD
					- - - * - - -		
-3	366-1054-00			1	KNOB:GRAY	80009	366-1054-00
	213-0153-00			2	. SETSCREW:5-40 X 0.125 INCH,HEX SOC STL	74445	OBD
-4	136-0497-00			1	JACK,TIP:RED	80009	136-0497-00
-5	136-0498-00			1	JACK,TIP:BLACK	80009	136-0498-00
					(ATTACHING PARTS FOR EACH JACK)		
-6	210-0583-00			1	NUT,PLAIN,HEX.:0.25-32 X 0.312 INCH,BRS	73743	2X20319-402
-7	210-0223-00			1	TERMINAL,LUG:0.25 INCH DIA,SE	78189	2101-14-03-2520N
-8	342-0137-00			1	WASHER,NONMETAL OD	80009	342-0137-00
					- - - * - - -		
-9	384-0853-00			1	SHAFT,CAM SW:OUTER CONC,FRONT DRIVER	80009	384-0853-00
					(ATTACHING PARTS)		
-10	354-0163-00			1	RING,RETAINING:	79136	5133-12MD
					- - - * - - -		
-11	366-1402-83			1	PUSH BUTTON:GRAY,10X	80009	366-1402-83
-12	366-1257-02			1	PUSH BUTTON:GRAY--AC	80009	366-1257-02
-13	426-0681-00			2	FR,PUSH BUTTON:GRAY PLASTIC	80009	426-0681-00
-14	333-1670-00			1	PANEL,FRONT:	80009	333-1670-00
					(ATTACHING PARTS)		
-15	210-0405-00			1	NUT,PLAIN,HEX.:2-56 X 0.188 INCH,BRS	73743	2X12157-402
-16	211-0101-00			1	SCREW,MACHINE:4-40 X 0.25" 100 DEG,FLH STL	83385	OBD
					- - - * - - -		
-17	337-1818-00			1	SHIELD,ELEC:	80009	337-1818-00
-18	220-0455-00			1	NUT,BLOCK:0.281"SQ,THREE 4-40 THRU THDS	80009	220-0455-00
					(ATTACHING PARTS)		
-19	211-0030-00			1	SCREW,MACHINE:2-56 X 0.25"82 DEG,FLH STL	83385	OBD
-20	211-0116-00			1	SCR,ASSEM WSHR:4-40 X 0.312 INCH,PNH BRS	83385	OBD
					- - - * - - -		
-21	386-2456-00			1	SUBPANEL,FRONT:	80009	386-2456-00
					(ATTACHING PARTS)		
-22	213-0012-00			4	SCREW,MACHINE:4-40 X 0.375 INCH,FLH STL	83385	OBD
					- - - * - - -		
-23	352-0171-00			2	CONN BODY,PL,EL:1 WIRE BLACK	80009	352-0171-00
-24	131-0707-00			2	CONTACT,ELEC:0.48"L,22-26 AWG WIRE	22526	47439
-25	----- -----			1	CKT BOARD ASSY:COUPLER(SEE A2 EPL)		
					(ATTACHING PARTS)		
-26	211-0155-00			2	SCREW,EXT,RLV B:4-40 X 0.375 INCH,SST	80009	211-0155-00
					- - - * - - -		
-27	361-0238-00			2	. SPACER,SLEEVE:0.25 OD X 0.34 INCH LONG	80009	361-0238-00
-28	260-1208-00			2	. SWITCH,PUSH:DPDT	71590	2KAB010000-359
-29	361-0382-00			4	. SPACER,PB SW:BROWN,0.275 INCH LONG	80009	361-0382-00
-30	136-0263-03			11	. CONTACT,ELEC:FOR 0.025 INCH SQUARE PIN	00779	86250-2
-31	136-0252-04			50	. CONTACT,ELEC:0.188 INCH LONG	22526	75060
-32	----- -----			1	. XTAL UNIT,QTZ:10MHZ,0.01%(SEE Y136 EPL)		
					(ATTACHING PARTS)		
-33	352-0096-00			1	. CLIP,SPR,TNSN:CRYSTAL	80009	352-0096-00
					- - - * - - -		
-34	136-0234-00			2	. . CONTACT,ELEC:0.088 OD X 0.247 INCH L	00779	380598-1
-35	337-0896-00			1	. . PLATE,ELEC SHLD:CKT BOARD MOUNT,BRS	80009	337-0896-00
-36	131-1462-00			1	CONTACT,ELEC:	80009	131-1462-00
-37	386-2321-00			1	SUBPANEL,REAR:	80009	386-2321-00
					(ATTACHING PARTS)		
-38	213-0012-00			1	SCREW,MACHINE:4-40 X 0.375 INCH,FLH STL	83385	OBD
-39	213-0034-00			3	SCR,TPG,THD CTG:4-40 X 0.188 INCH,PNH STL	83385	OBD
					- - - * - - -		
-40	384-1207-00			1	EXTENSION SHAFT:5.6" L X 0.125 STEP OD	80009	384-1207-00
					(ATTACHING PARTS)		
-41	213-0075-00			2	SETSCREW:4-40 X 0.094 INCH,HEX SOC STL	70276	OBD
					- - - * - - -		

Fig. & Index No.	Tektronix Part No.	Serial/Model No. Eff	Dscont	Qty	1 2 3 4 5 Name & Description	Mfr Code	Mfr Part Number
1-	672-0425-00			1	CKT BOARD ASSY:W/CAM SWITCH		
	263-1033-00			1	. ACTR ASSY,CAM S:	80009	263-1033-00
					(ATTACHING PARTS)		
-42	211-0116-00			4	. SCR,ASSEM WSHR:4-40 X 0.312 INCH,PNH BRS	83385	OBD
					- - - * - - -		
-43	200-1520-00			1	. . COVER,CAM SW:	80009	200-1520-00
					(ATTACHING PARTS)		
-44	211-0022-00			2	. . SCREW,MACHINE:2-56 X 0.188 INCH,PNH STL	83385	OBD
-45	210-0001-00			2	. . WASHER,LOCK:INTL,0.092 ID X 0.18"OD,STL	78189	1202-00-00-0541C
					- - - * - - -		
-46	210-0405-00			1	. . NUT,PLAIN,HEX.:2-56 X 0.188 INCH,BRS	73743	2X12157-402
-47	210-0406-00			2	. . NUT,PLAIN,HEX.:4-40 X 0.188 INCH,BRS	73743	2X12161-402
-48	401-0058-00			1	. . BEARING,CAM SW:FRONT:	80009	401-0058-00
-49	105-0441-00			1	. . ACTUATOR,CAM SW:	80009	105-0441-00
					(ATTACHING PARTS)		
-50	354-0219-00			1	. . RING,RETAINING:FOR 0.25 INCH SHAFT	79136	5103-25-MD-R
					- - - * - - -		
-51	214-1126-01			2	. . SPRING,FLAT:GOLD COLORED	80009	214-1126-01
-52	214-1127-01			1	. . ROLLER,DETENT:0.125 DIA X 0.125 INCH L	80009	214-1127-01
-53	401-0061-00			1	. . BEARING,CAM SW:REAR:	80009	401-0061-00
-54	407-0714-00			1	. . BRACKET,CAM SW:	80009	407-0714-00
-55	131-0840-00			1	. . CONTACT,ELEC:GROUNDING	80009	131-0840-00
-56	----- -----			1	. CKT BOARD ASSY:CONVERTER(SEE A1 EPL)		
-57	337-1821-00			1	. . SHIELD,ELEC:	80009	337-1821-00
-58	214-0579-00			2	. . TERM.,TEST PT:0.40 INCH LONG	80009	214-0579-00
-59	337-1820-00			1	. . SHIELD,ELEC:	80009	337-1820-00
-60	131-0608-00			2	. . CONTACT,ELEC:0.365 INCH LONG	22526	47357
-61	131-0590-00			11	. . TERMINAL,PIN:0.71 INCH LONG	22526	47351
-62	337-1819-00			1	. . SHIELD,ELEC:	80009	337-1819-00
-63	131-0604-00			13	. . CONTACT,ELEC:0.025 SQ X 0.365 INCH LONG	80009	131-0604-00
-64	131-0566-00			1	. . LINK,TERM.CONNE:0.086 DIA X 2.375 INCH L	0000C	L-2007-1
-65	136-0252-04			92	. . CONTACT,ELEC:0.188 INCH LONG	22526	75060
-66	351-0188-00			2	. . GUIDE-POST,LOCK:0.65 INCH LONG	80009	351-0188-00
-67	214-2044-00			1	SPRING,FLAT:	80009	214-2044-00
-68	200-1654-00			1	COVER,CMPNT:	80009	200-1654-00
-69	426-0930-00			2	FRAME SECTION:TOP AND BOTTOM	80009	426-0930-00

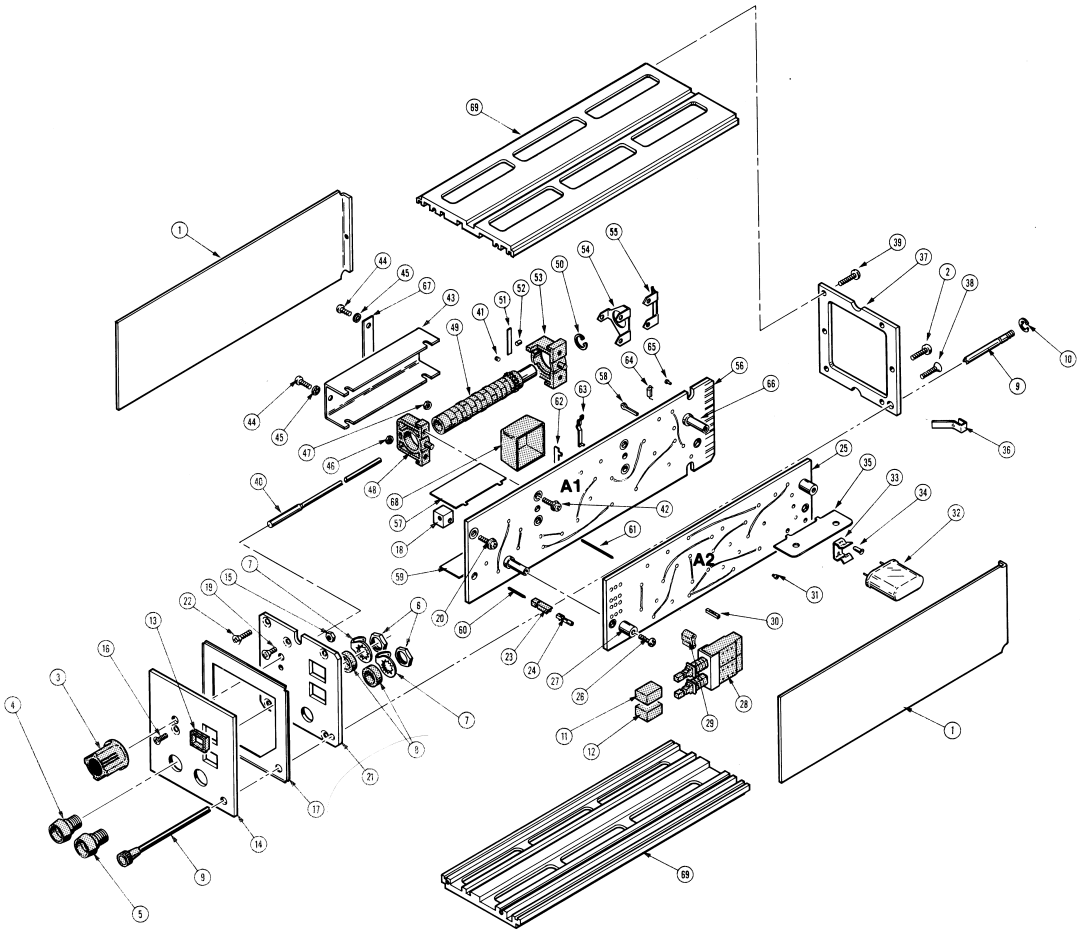

M3 RMS VOLTS MODULE