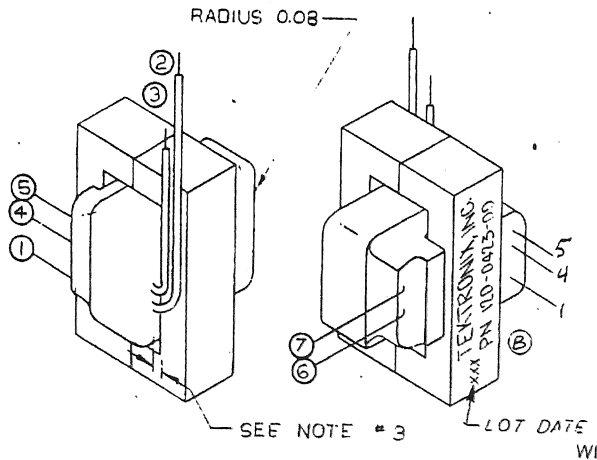

PART NO. 120-0423-00 REV. C

REV.	BY	REFER.	DESCRIPTION OF CHANGE	CKD BY	DATE
A	BOB BVE	COGAN	ADDED: CORE 276-0544-00 & 276-0545-00		4-13-66
B	L. CLEM		RELOCATE MARKING		6 AUG 68
C	CH	LJW	ADDED CS		13 FEB 74

MATERIAL

WIRE	176-0058-00	#29
	175-0566-00	#38
FORM	166-0011-00	(SMALL)
TAPE	253-0015-00	(RAYON)
	253-0019-00	(MYLAR)
WEB	253-0046-00	
EPOXY	252-0089-00	
CORE	276-0544-00	A
	276-0545-00	

TEK 549 Scope

PRIMARY

LEAD	VOLTS
1-4	90
1-3	180
3-4	270

SECONDARY

LEAD	VOLTS	CURRENT
2-6	2650	100 μa
5-7	2650	400 μa

OPERATING FREQUENCY: 50 KHz
RATINGS ARE NOMINAL & VARY WITH LOAD & INPUT VOLTAGE

WINDING DATA

PRIMARY: #29 AWG
4-1-3: Ø-34-102 T HAND WOUND

SECONDARY: #38 AWG 5/16" CAM BIFILAR
SEC #1 2-6: Ø-1000 T
SEC #2 5-7: Ø-1000 T

LEAD DATA

TERM	LEAD	LENGTH	NOTES
1	BARE	1.50" S'	PRI TAP
2	GREEN	4.75" * S'	SEC 1 START
3	BLUE	2.25" * S'	PRI FINISH
4	BARE	1.50" S'	PRI START
5	BARE	1.50" S'	SEC 2 START
6	BARE	1.50" S'	SEC 1 FINISH
7	BARE	1.50" S'	SEC 2 FINSH

* * 20 TUBING GREEN 162-0520-00 4.25 ± 0.06
* * 20 TUBING BLUE 162-0524-00 1.75 ± 0.06
S' #24 TIN COPPER 176-0055-00

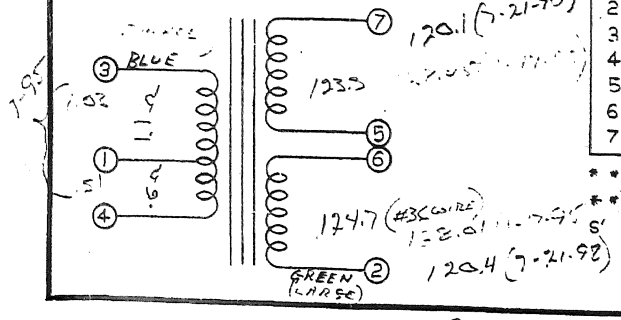

3. SECURE COIL TO CORE WITH WOODEN WEDGES TO MAINTAIN MAXIMUM SPACE 0.08
2. COIL ENCAPSULATED WITH EPOXY RESIN
1. LEAD LENGTHS MINIMUM

NOTES: C

CUSTOMER SERVICE

TEKTRONIX, INC. BEAVERTON, OREGON, U.S.A.	TITLE TRANSFORMER, HIGH VOLTAGE			
	MATERIAL LISTED			
	FINISH NOTED			
TOLERANCE UNLESS OTHERWISE SPECIFIED DEC ±.010 ANG ± 2° HOLES +.010 -.002 MM ±	DR. BY L. CLEM	2-3-66	ENGR. W. CRAYNE	2-3-66
	CH. BY	2-11-66	PROD R. Gerson	2-7-66
	SCALE NONE		FIRST USED 549	
	SIZE B	PART NO. 120-0423-00		REV. C