TEK INSTRUCTION MANUAL

Part No. 070-1455-00
Product Group 20

1430
RANDOM NOISE MEASURING SET

Please Check for CHANGE INFORMATION at the Rear of This Manual

First Printing NOV 1972
Revised APR 1986

Tektronix®
COMMITTED TO EXCELLENCE

TABLE OF CONTENTS

INSTALLATION

Your instrument has been shipped from the factory wired according to your instructions. Perform the following steps:

1. CHECK PROGRAMMING

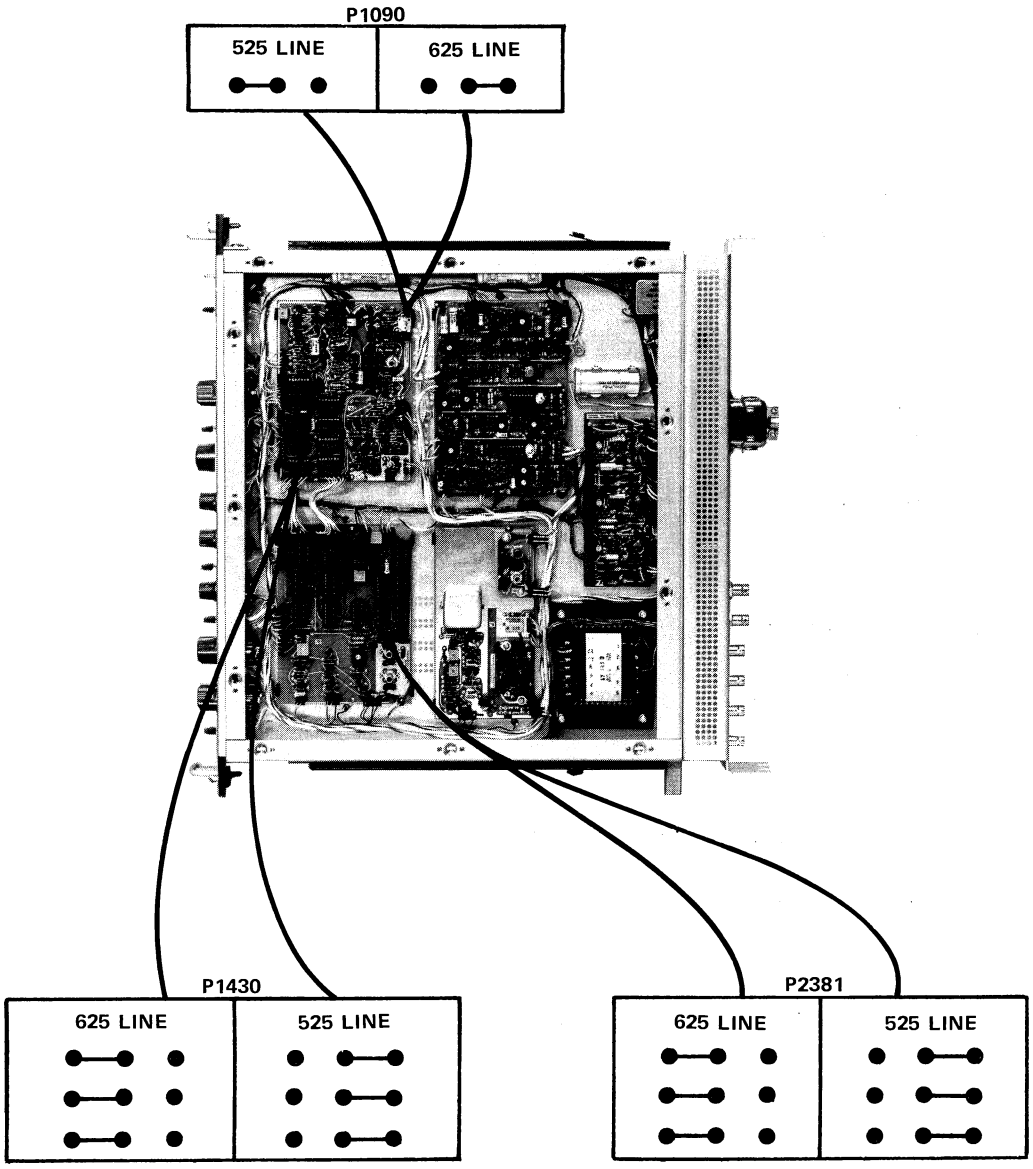

2. CHECK POWER CONNECTIONS

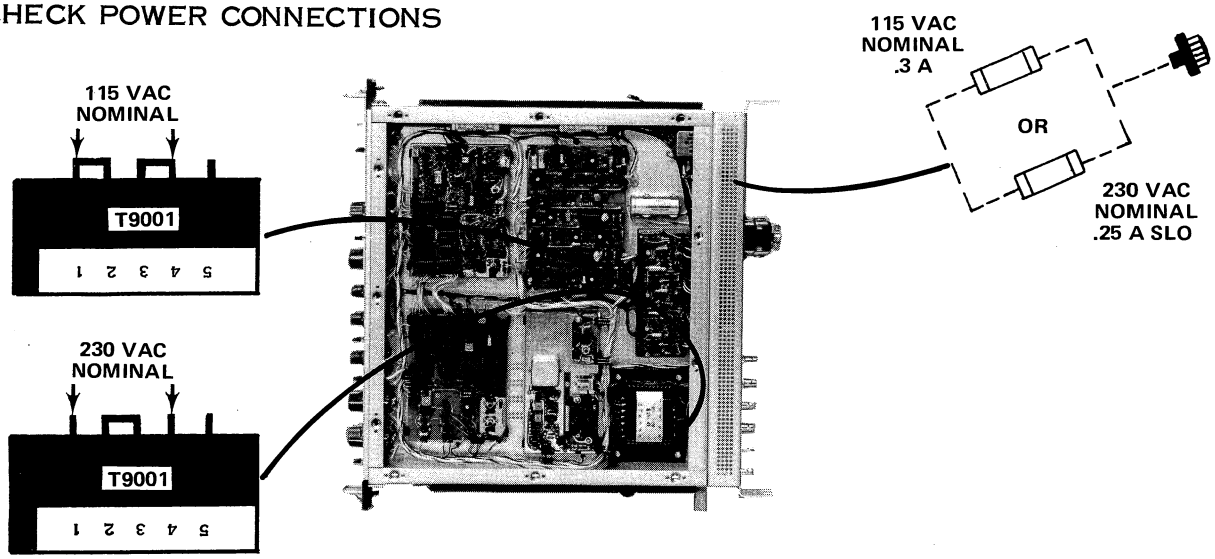

3. INSTALL THE 1430 IN A STANDARD 19-INCH RACK

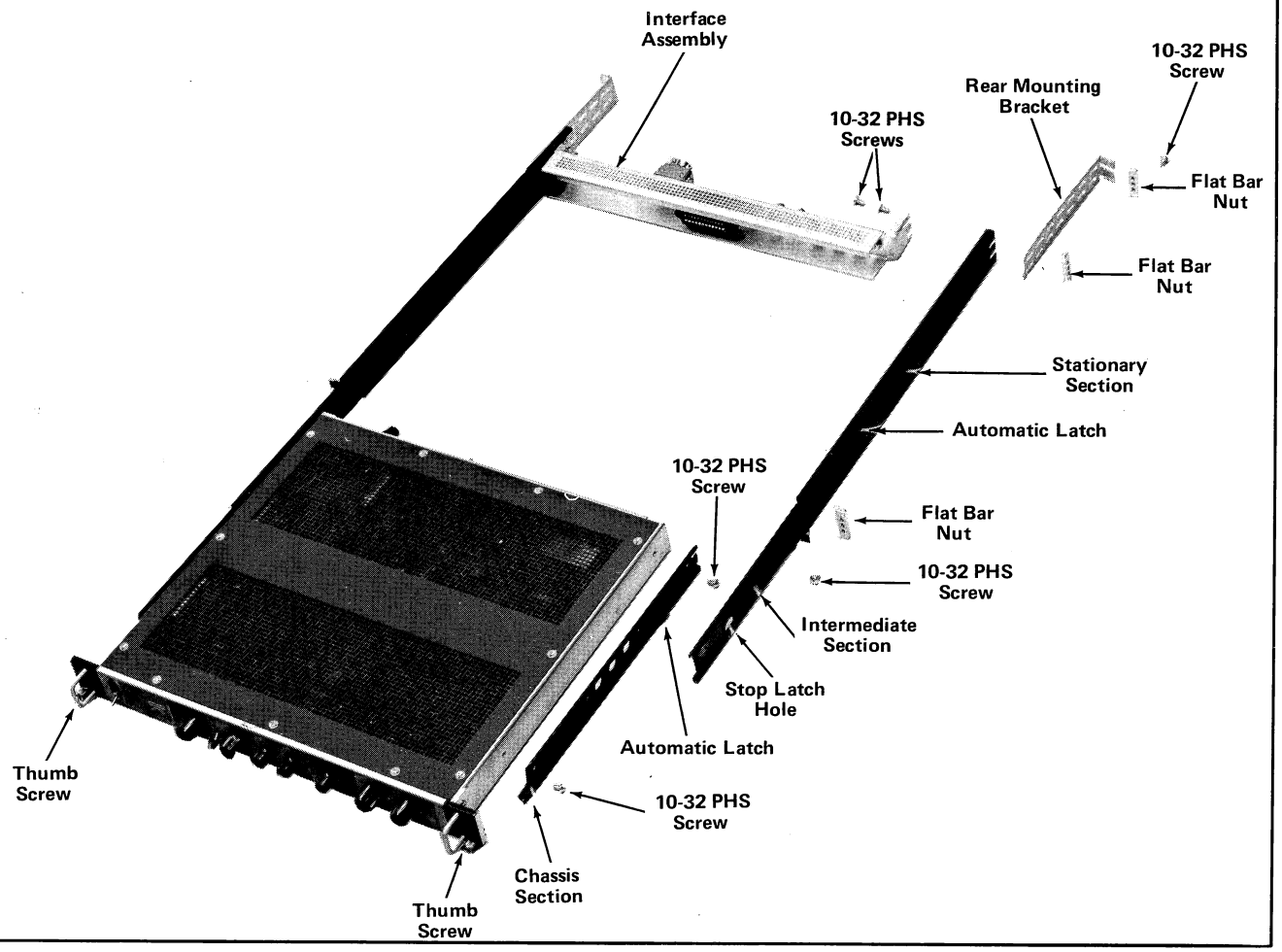

Ⓐ

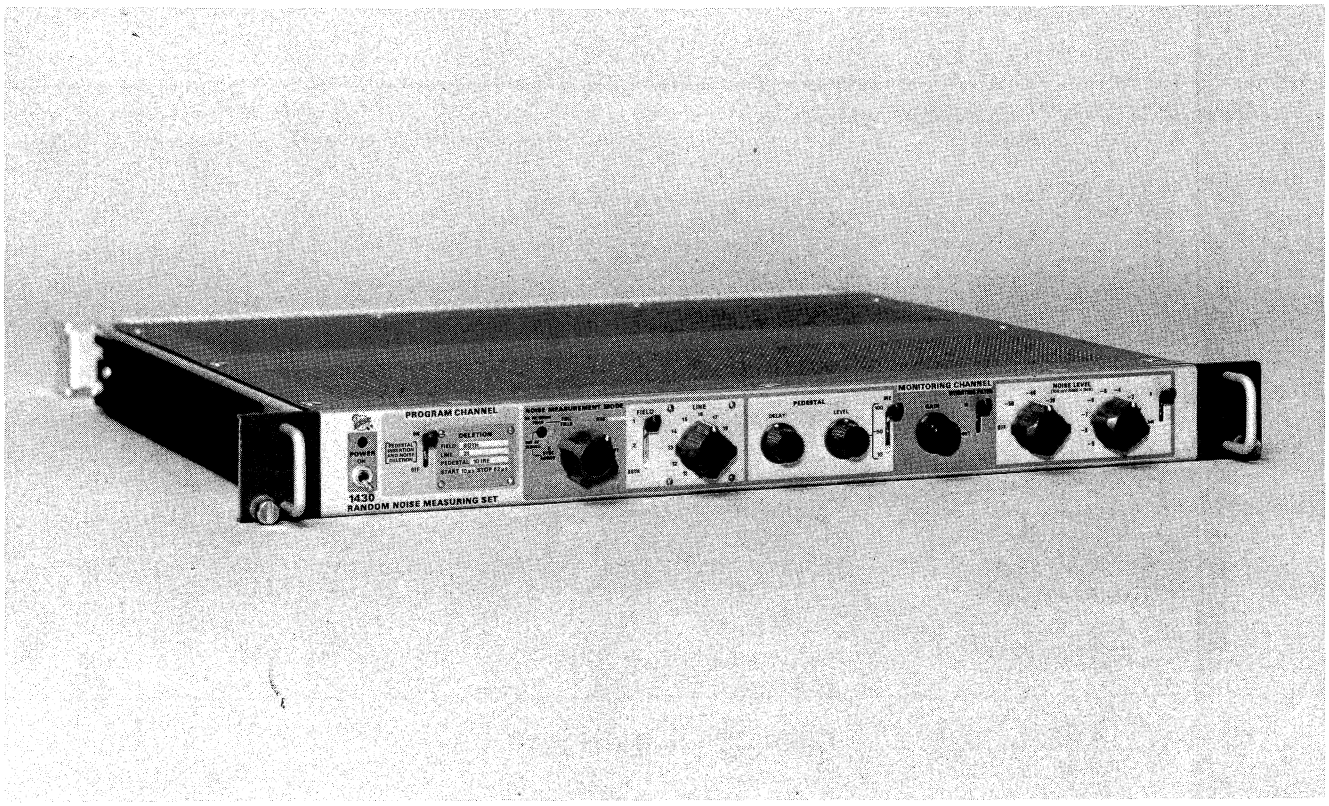

(A) 525 Line Systems

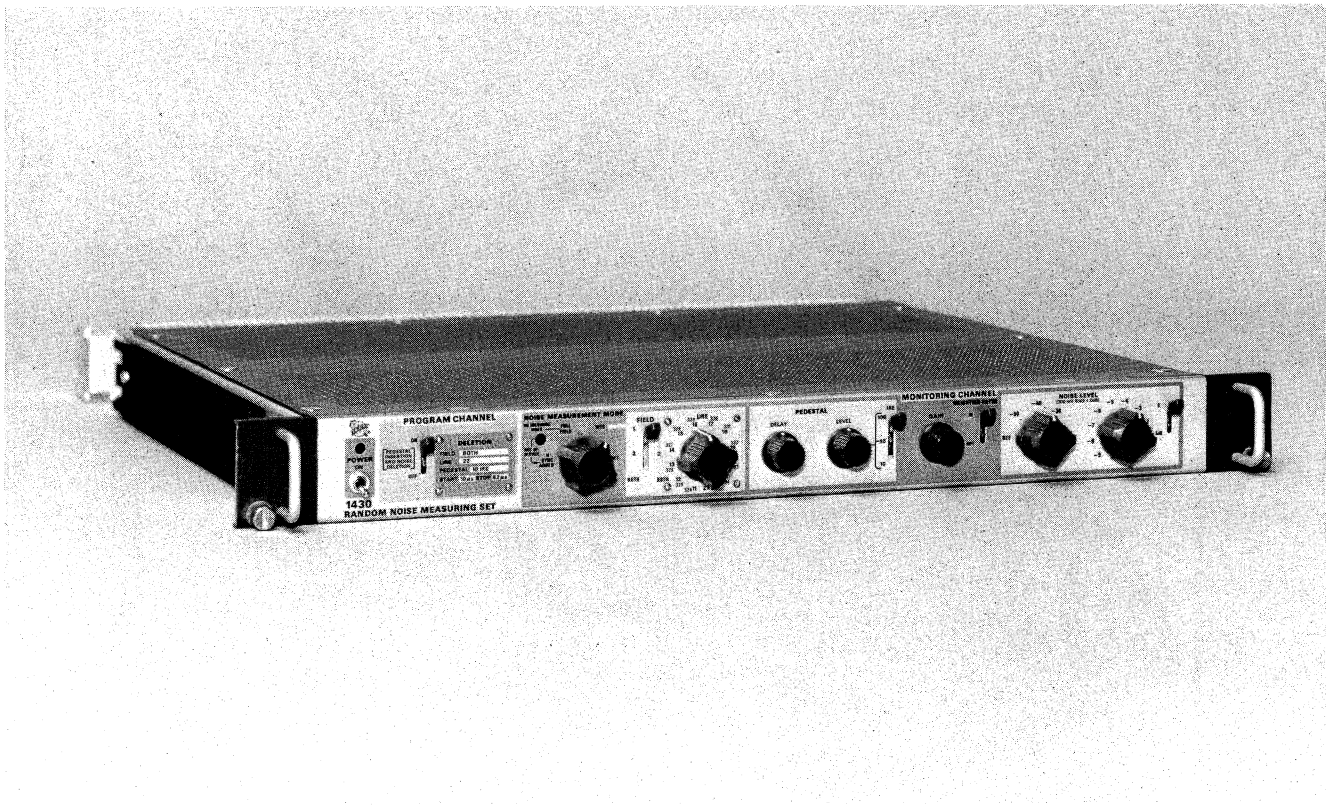

(B) 625 Line Systems

Fig. 1-1. The 1430 Random Noise Measuring Set.

SPECIFICATION

Introduction

The 1430 Random Noise Measuring Set provides measurement capabilities on an in-service basis using the adjacent noise matching technique with a waveform monitor as described in "In Service Noise Measurement on a CATV System", by Charles W. Rhodes (20th Annual NCTA Convention and Exposition, Washington, D.C.; July 6 through 9, 1971)[1] and "Measuring Distortions in the Television Signal", by Charles W. Rhodes (TEKscope, November, 1971)[1] and "In-service Measurement of Continuous Random Noise Using the Vertical Interval (525/60 Standards)", by Charles W. Rhodes (112th Technical Conference and Equipment Exhibit of the SMPTE, Los Angeles, California; October 22 through 27, 1972.[1]

Program Channel

A program channel is provided for deletion of test signals or noise on selected lines during the vertical blanking interval.

The program channel has 75 Ω input impedance, unity gain, and 75 Ω output impedance. No program signal impairment is introduced by the program channel. A relay provides video program signal continuity if the 1430 loses power. All deletion parameters are controlled by internal programming, which are readily changeable within the 1430. Deletion of any three lines (10-21 in 525 line systems, 8-22, 321-335 in 625 line systems) in either or both fields is provided. The deletion may be selected between the first half, second half, or a full active portion of the video line. A pedestal may be inserted in the deleted portion of the line at one of three levels (10, 50, or 100 IRE in 525 line system; 352.5 mV, 650 mV or 1000 mV in 625 line systems).

Monitor Channel

The monitor channel has an independent output for use with a waveform monitor when comparing the noise of the incoming video signal against the noise from the internal noise generator.

Four operating modes are provided: OFF, program signal bypassed to monitor output without interruption; VITS, lines selected by front-panel switches are available for insertion of the reference noise; FULL FIELD, insertion on all active lines; and H SYNC ADDED, horizontal sync added for synchronization of monitoring equipment when the measurement source does not contain composite sync.

A front-panel controlled, noise weighting network[2] is included for "weighted" measurements of the spectral content of the incoming noise. The output of the monitor channel passes through a low-pass filter to the MONITOR OUTPUT. The noise weighting networks, along with the low-pass filters vary with the scanning systems. A Unified Noise Weighting Network[3] is provided for the scanning system.

Performance Conditions

The specified limits of the instrument calibration characteristics are valid with the following conditions: the instrument must be calibrated at an ambient temperature between +20°C and +30°C, operated within an ambient temperature of 0°C to +50°C, and must have a warm-up period of at least 5 minutes.

[1] **Available on request.**

[2] **In accord with CCIR Recommendations 567 and 568, Kyoto 1978, Vol. X11, pp. 1-39.**

[3] **Complies with CMTT Document 1048-E.**

TABLE 1-1

Program Channel Electrical Characteristics

Characteristics	Performance Requirements	Supplemental Information
Signal Input Level	1 volt nominal.	
Input Impedance	75 Ω nominal.	
Input Return Loss		
POWER ON	At least 46 dB to 5 MHz.	
POWER OFF or BYPASS	At least 40 dB to 5 MHz.	
Output Impedance (Operating)	75 Ω nominal.	Non-operating; Tied to input by relay.
Output Return Loss (ALL)	At least 30 dB to 5 MHz.	
Output DC Level	0 Volts within 50 mV, for blanking pulses	
Inserted Pedestal Level	Adjustable to 100, 50, 10, or 0 IRE.	
2T Pulses to Bar Amplitude	Within 0.25%.	
Relative Chrominance/Luminance Gain	100% within 0.5%.	
Differential Phase (10%, 90% APL, Standard Input) PROGRAM OUT	0.15° or less.	
Differential Gain (10%, 90% APL, Standard Input) PROGRAM OUT	0.2% or less.	
Line Time Amplitude Non-Linearity (10%-90% APL, Standard Input)	0.5% or less.	
Random Noise		
PROGRAM OUTPUT	At least 75 dB (RMS) down.	Using weighted and low pass filters (5 MHz).
Hum or Transients on Non-Inserted Lines	At least 60 dB down.	Using weighted and low pass filters (5 MHz).
Spurious Signals During Blanking Lines	At least 40 dB down.	Low pass (5 MHz).
Signal Attenuation in "Delete" Mode		
2T Pulse	At least 70 dB down	Low pass (5 MHz)
Subcarrier (Color Bars)	At least 60 dB down	Low pass (5 MHz)
Line and Field Time Linear Waveform Distortion[3]		Measured differentially
Field Rate Squarewave	0.5% or less	
26 μs Bar	0.5% or less	
Unwanted Pedestal at Time of VITS Insertion	0.7 IRE or less	

[3] See F. Davidoff, "Improvements in Color TV Studio System Performance", Journal of the SMPTE, August, 1972; pp. 788-791.

TABLE 1-2

Monitor Channel Electrical Characteristics

Characteristic	Performance Requirements	Supplemental Information
Noise		
Noise Measurement Signals		
Pedestal Amplitude		
10 IRE	10 IRE nominal.	
50 IRE	50 IRE nominal.	
100 IRE	100 IRE nominal.	
PEDESTAL LEVEL (Insertion mode only)		Provides continuous over-lapping.
Delay	10 to 50 μs.	
Noise Amplitude	−20 dB to −59.5 dB (0 dB = 700 mV RMS)	Per CCIR Recommendation 421-2.[4]
Noise Attenuators		
Absolute Amplitude	Within 1 dB.	
Noise Spectrum		
Energy/Unit Bandwidth	Flat within 6 dB, 50 kHz to 5 MHz.	
Output Impedance	75 Ω nominal.	
Return Loss	At least 30 dB.	
Noise Weighting Network	Per CCIR Recommendation 567 and 568	See Table 1-3
Low Pass Filter	Per CCIR Recommendation 567 and 568	See Fig. 1-2.
Gain	±3 dB range.	
2T Pulse to Bar Amp	0.4%	
Relative Chrominance/ Luminance Gain	100% within 0.75% in off mode.	
Line and Field Time Linear Waveform Distortions[3]		Measured differentially.
Field Rate Squarewave	0.75%	
26 μs Bar	0.75%	
Differential Phase (10%-90% APL, Standard Input)	0.4° or less	
Differential Gain (10%-90% APL, Standard Input)	0.5% or less	

[4] CCIR, XII Plenary Assembly, New Delhi, 1970, Vol. V, Part 2, Recommendation 421-2, Annex II and III, pp. 187-188.

	frequency	f/fc	dB	f/fc	dB
f_c	5.0 MHz	1.00	1.8	1.05	18.8
f_1	4.9 MHz	1.01	4.2	1.06	23.0
f_2	5.5 MHz	1.02	7.3	1.07	27.7
f_{L1} Each inductor is tuned for maxi-	9.41 MHz	1.03	10.9	1.08	33.3
f_{L2} mum insertion loss of associated	5.51 MHz	1.04	14.8	1.09	41.0
f_{L3} frequency.	6.15 MHz				

For use in the measurement of continuous random noise in 75 ohm video systems. For additional information see CCIR Recommendations 567

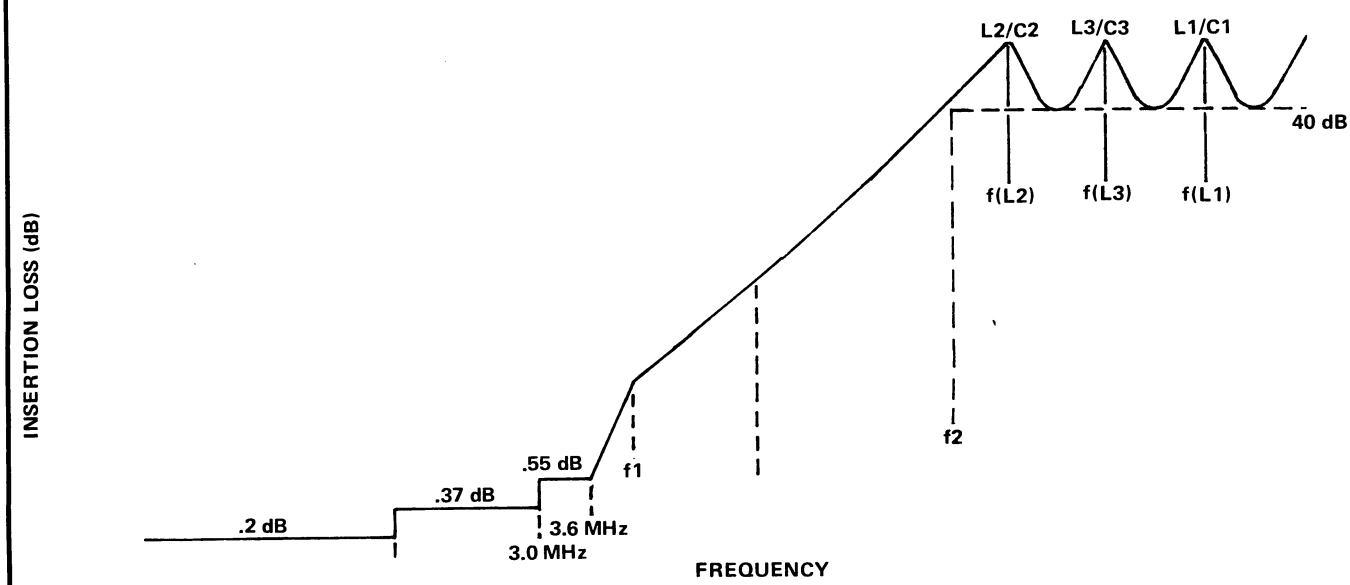

Fig. 1-2. Low Pass filter details.

TABLE 1-3

Unified Noise Weighting Network

FREQ (MHz)	.01	.05	.1	.5	1	2	3	4	5
Insertion Loss (dB)	0	0	.2	2.6	6.1	10.1	12.0	13.0	13.6
Return Loss		>40 dB at 5 MHz							

TABLE 1-4

Power Supply Electrical Characteristics

Characteristics	Performance Requirements	Supplemental Information
Line Voltage Range		
115 VAC	90 V to 132 V	
230 VAC		180 V to 264 V
Crest Factor		At least 1.35
Maximum Line Current	.25 A	
Maximum Power Consumption	30 W	
Line Frequency Range	48 to 66 Hz	

Environmental Characteristics

The following environmental test limits apply when tested in accordance with the recommended test procedure. This instrument will meet the electrical performance requirements given in this section following an environmental test. Complete details on environmental test procedures, including failure criteria, etc., may be obtained from Tektronix, Inc. Contact your local TEKTRONIX Field Office or representative.

TABLE 1-5

Environmental

Characteristic	Information
Temperature	
Non-Operating Range	–40°C to +65°C
Operating Range	0°C to ± 50°C
Altitude	
Non-Operating Range	to 50,000 feet
Operating Range	to 15,000 feet

OPERATING INSTRUCTIONS

General

This section furnishes information for operating the 1430. Included are (1) Controls and Connectors, describing each front-panel control and rear-panel connector; (2) First Time Operation, a step-by-step procedure simulating actual operating conditions; and (3) Operating Changes, describing how to change the 1430 for certain user applications.

CONTROLS AND CONNECTORS

POWER — Toggle switch to turn instrument power ON and OFF. Lamp indicates when POWER switch is ON and power is being applied to the instrument.

PROGRAM CHANNEL — Two position lever switch to control PROGRAM OUT SIGNAL.

ON — In this position, test signals (or noise) during the vertical interval on selected lines are deleted, and a pedestal (internally selected) may be inserted in place of the external test signal (or noise).

OFF — In this position, PROGRAM IN signal is routed to PROGRAM OUT without interruption.

NOTE

Pedestal is the **only** *signal inserted on PROGRAM OUT.*

MONITOR CHANNEL — Consists of four rotary switches, three lever switches, and three variable adjustments to control MONITOR OUT signal.

MODE — Four position rotary switch to select mode of operation. Lamp (NO INCOMING VIDEO) indicates loss of incoming video.

OFF — In this position, PROGRAM IN signal is routed (via relay) to MONITOR OUT. No insertion is available in this mode.

VITS — In this position, internally generated noise (1/2 line) is inserted into the vertical blanking interval of the applied composite video signal, according to the FIELD and LINE switch settings.

FIELD — Three position lever switch to select field in which noise signal is inserted. 525 Line Systems: FIELD 1, FIELD 2, or BOTH; 625 Line Systems: FIELDS 1/3, FIELDS 2/4, or ALL.

LINE — Twelve position rotary switch to select line on which noise signal is inserted. 525 Line System: 10 through 21; 625 Line System: 11/324 through 22/335.

FULL FIELD — In this position, internally generated noise (1/2 line) is inserted in all active lines.

H SYNC ADDED — In this position, internally generated noise (1/2 line) and **H SYNC ONLY** is inserted and added to the incoming signal.

NOTE

H SYNC ADDED mode is for use only when incoming signal lacks sync.

PEDESTAL — One lever switch and two variable adjustments to control inserted noise signal in all modes, except OFF.

IRE — Three position lever switch to select one of three indicated levels of pedestal on which noise measurements can be made.

LEVEL — Control to permit variation in the pedestal amplitude for accurate matching of pedestal level on which noise measurement is made.

DELAY — Control to allow any portion of active line time to be selected as pedestal level on which noise measurement can be made.

NOISE LEVEL (dB) — Consists of two rotary switches and one lever switch to set the amplitude of the internally generated noise signal between −20 and −59.5 dB. (700 mV RMS = 0 dB).

WEIGHTING FILTER — Consists of one lever switch and 1 variable adjustment to control MONITOR OUT.

OUT	Weighting network switched out of circuit.
IN	Weighting network switched in circuit for use in evaluating spectral content of signal.
GAIN	Control to permit unity gain between PROGRAM IN and MONITOR OUT or Variable gain.
CAL	In this position, PROGRAM IN and MONITOR OUT have unity gain.
VAR	Amplitude of MONITOR OUT signal is variable + and −3 dB of unity gain.
PROGRAM IN	Rear-panel 75 Ω BNC input for program signal.
PROGRAM OUT	Rear-panel 75 Ω BNC output for program signal with pedestal added (depending on PROGRAM CHANNEL switch position).
MONITOR OUT	Rear-panel 75 Ω BNC output. Noise may be added, depending on MONITOR CHANNEL controls.
REMOTE	24 pin connector. Factory wired for Local (1430 front-panel) operation.

FIRST TIME OPERATION

The following consists of a step-by-step procedure which makes use of each control and connector. This procedure, in most cases, simulates the actual in-service operation of the 1430.

The procedure is written using the 525 line system and makes use of a waveform monitor to observe field and line rate displays. An external video source is needed to provide program signal (composite video) and a test signal during the vertical interval. The following equipment is used: TEKTRONIX Type 140 NTSC Test Signal Generator (used as an external video source), and TEKTRONIX Type 529 Waveform Monitor (used to observe field and line rate displays). Proper operation of each unit is assumed; refer to the operating instructions for each. Also required are: two end-line, 75 Ω, BNC terminations, TEKTRONIX Part No. 011-0102-00; two 75 Ω, BNC coaxial cables, TEKTRONIX Part No. 012-0074-00.

For 625 line systems a TEKTRONIX Type 141A PAL Television Test Signal Generator and a TEKTRONIX Type 529 Mod 188D Waveform Monitor are recommended.

(1) Set the 1430 front-panel controls as follows:

POWER	OFF
PROGRAM CHANNEL	OFF
MONITORING CHANNEL	
NOISE MEASUREMENT MODE	OFF
FIELD	BOTH
LINE	17
PEDESTAL	
DELAY	Midrange
LEVEL	Midrange
IRE	50
GAIN	CAL
WEIGHTING FILTER	OUT
NOISE LEVEL	
10 dB	OFF
1 dB	−9 dB
.5 dB	0

(2) From the 1430 PROGRAM OUT connector, connect a 75 Ω coaxial cable to the waveform monitor A Input connector. Terminate the loop-through A Input with a 75 Ω end-line termination. Connect the 1430 MONITOR OUT signal to the waveform monitor B Input in the same manner. Connect the signal source composite video to the 1430 PROGRAM IN with a 75 Ω coaxial cable. The signal source should provide a vertical interval test signal on line 17 of both fields.

(3) Set the waveform monitor to view the A Input at a 2 Field Display rate, and observe the vertical interval at maximum magnification. Notice that the displayed signal is the incoming program signal indicating that the 1430 has been bypassed via the relay to the PROGRAM OUT connector.

(4) Set the 1430 POWER switch ON. Note the power-on indicator lamp is lit. If the NO-INCOMING VIDEO lamp stays lit, there is no Gen-Lock, and the signal source should be checked for sync.

NOTE

Without Gen-Lock, the 1430 will not delete or insert test signals on the incoming composite video.

(5) Set the PROGRAM CHANNEL switch to ON. Notice the PROGRAM OUT signal (waveform monitor A Input). It should consist of the signal source composite video, a test signal on line 17, and the program indicated on the 1430 DELETION plate (e.g., pedestal on line 21 of both fields). Change the signal source vertical interval test signal to the LINE and FIELD indicated on the DELETION plate. Note that the test signal is deleted.

(6) Remove the 1430 rear-panel REMOTE plug. The pedestal generated by the 1430 should be replaced by the signal source test signal, indicating that the 1430 has been bypassed. Reconnect the REMOTE plug. Return the signal source vertical interval test signal to line 17.

(7) Observe the 1430 MONITOR OUT (waveform monitor B Input) signal. Note the signal source composite video and the vertical interval test signal. Set the NOISE MEASUREMENT MODE switch to VITS. Notice that a half-line pedestal is added to line 17.

(8) Vary the PEDESTAL DELAY control. Notice that the pedestal moves from left to right with clockwise rotation of the control.

(9) Vary the LEVEL control. Notice that the pedestal amplitude increases with clockwise rotation of the control.

(10) Set the IRE switch to 100. Notice that the pedestal amplitude increases. Set the IRE switch to 10. Notice that the pedestal amplitude is reduced.

(11) Check the FIELD and LINE selection switches for indicated operation.

(12) Switch the waveform monitor from B Input (MONTIOR OUT) to A Input (PROGRAM OUT) and back. Notice that the composite video amplitudes remain the same. Vary the GAIN control. Notice a gain change of ≈+40% to ≈–30% from the CAL position for the incoming composite video, while the 1430 vertical interval signal remains unchanged. Set the GAIN control to CAL.

(13) Set the WEIGHTING FILTER switch to IN. Notice deterioration of composite video and reduction of chrominance amplitude. Set the WEIGHTING FILTER switch to OUT.

(14) Set the NOISE LEVEL OFF/–20 switch to –20. Note that noise has been added on the pedestal. Rotate the NOISE LEVEL –9 and –0 dB switches. There should be a decrease in noise level. (The 0/–.5 dB switch will have no apparent effect on the display.) Leave the switches at –20, –0, and 0.

(15) Set the NOISE MEASUREMENT MODE switch to FULL FIELD. There should be half-line noise on all active lines, except the last active line or last one and one-half active line of each field. Set the waveform monitor for a 2 Line Display rate.

(16) Set the MODE switch to H SYNC ADDED. Notice that the 1430 adds sync pulses to the existing sync pulses. Remove the signal source from PROGRAM IN and notice a 1430 signal consisting of sync and a half-line of noise.

This completes the First Time Operation procedure.

OPERATING CHANGES

The 1430 is factory-connected to provide outputs which are most frequently used by the industry. However, many internal changes can be made to the 1430 which alter the usual outputs to fit other applications.

The following provides information necessary to change or modify the 1430 where possible.

Program Pedestal Insertion and Noise Deletion. As stated in the 1430 introduction, the program channel is provided for the deletion of test signals (or noise) during the vertical interval on selected lines. In place of the deleted signal (or noise), and available at the PROGRAM OUTPUT, is a pedestal generated by the 1430. This pedestal is internally programmed at the factory, as indicated by the front-panel DELETION plate.

If desired, up to three pedestals may be inserted into the vertical interval on three of 15 lines. Additional changes are: (1) four levels of pedestal amplitude; (2) the ability to vary the pedestal between the first half, second half, or full portion of a line; or (3) a pedestal on each line (full field).

As a convenience to personnel operating the 1430, the front-panel DELETION plate may be removed, and the front-panel will consist of an array of write-in spaces where the new pedestal programming may be written in.

Refer to Fig. 2-1 and diagrams 1 and 2 for reprogramming information.

Superimposed Noise. If desired, noise may be added to the MONITOR OUT signal at all times by changing the connector on pins 1 and 2 of P3545 to pins 2 and 3. See Fig. 2-2 and diagram 3 for physical and electrical location of P3545.

Continuous Noise. If desired, continuous noise at the MONITOR OUT can be obtained by changing the connector on P2735 from the INS position to the CW position. See Fig. 2-3 and diagram 2 for physical and electrical locations of P2370.

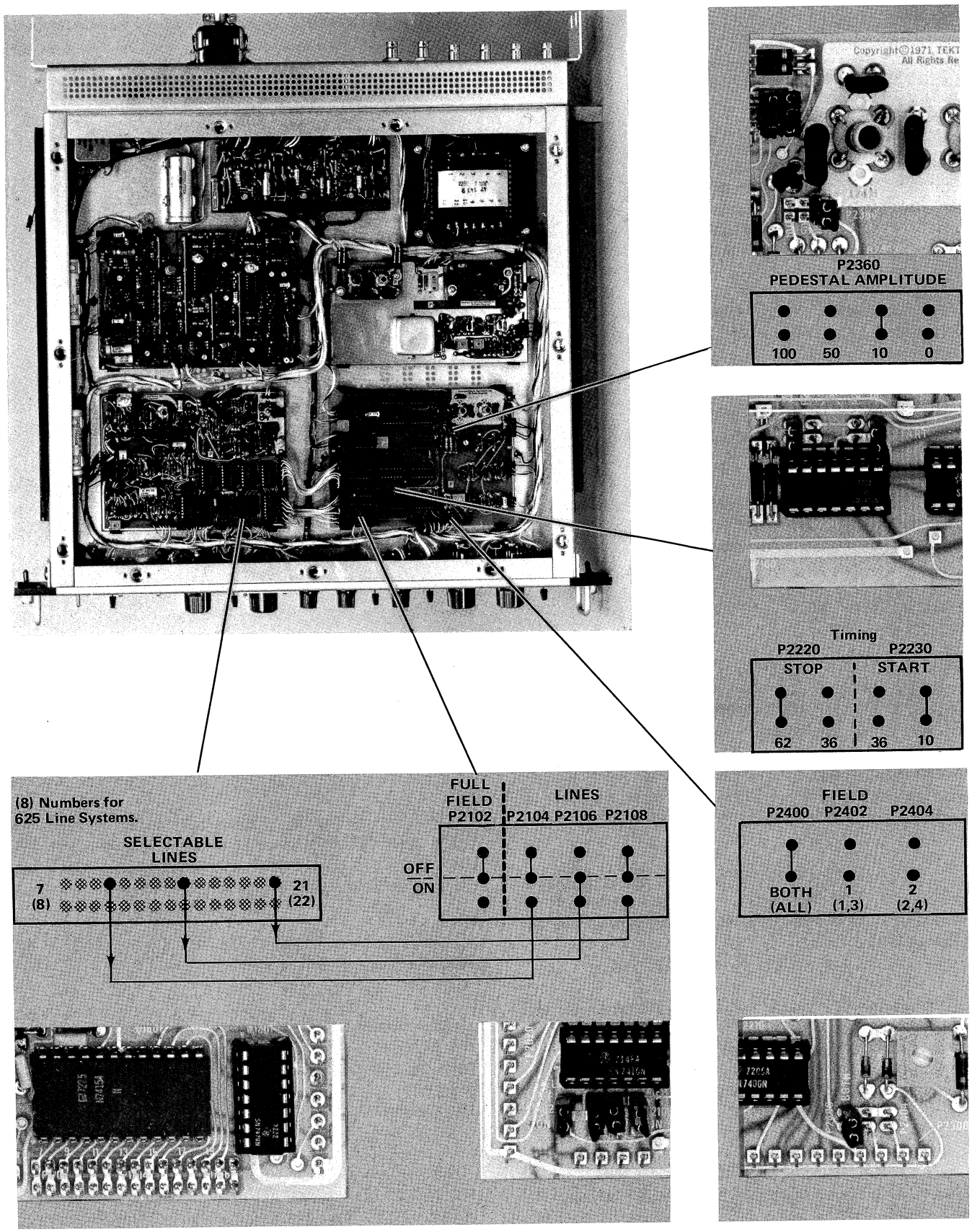

Fig. 2-1. Program pedestal insertion and noise deletion programming instructions with illustrations.

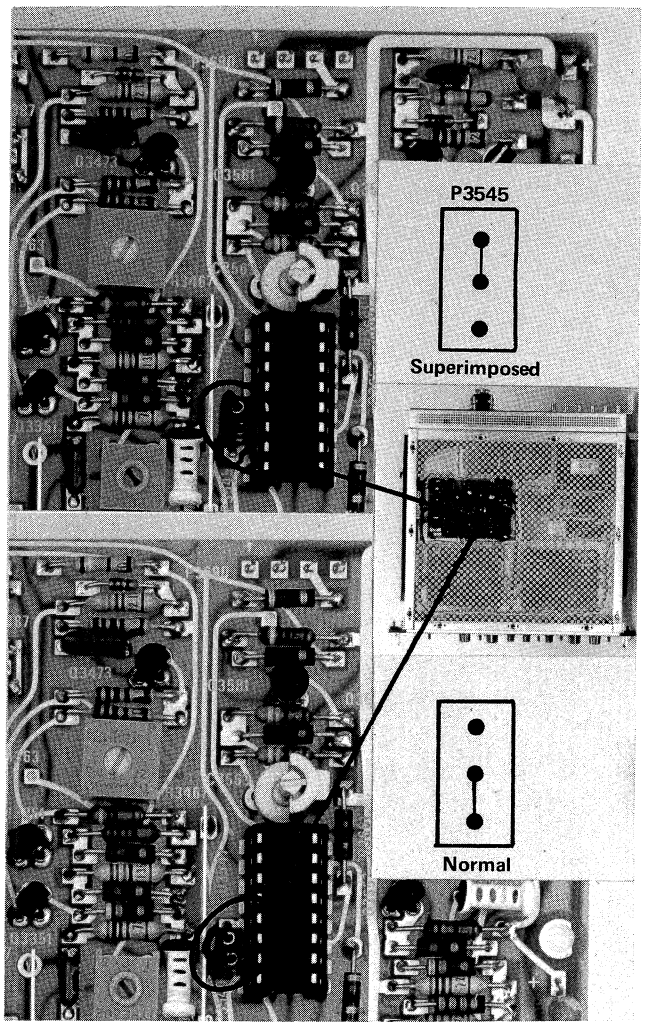

Fig. 2-2. Physical location of P3545: for MONITOR OUT superimposed noise.

NOTE

In H SYNC ADDED mode, H sync will be added to the continuous noise for use with monitoring equipment.

Remote Connector. As factory connected, the 1430 REMOTE PLUG, P9014 (located on rear-panel), has been factory wired for local operation. (Local refers to 1430 operation from the front-panel.) See Fig. 2-4A.

If desired, this plug may be wired for REMOTE BYPASS at a remote location. See Fig. 2-4B for wiring and switch information.

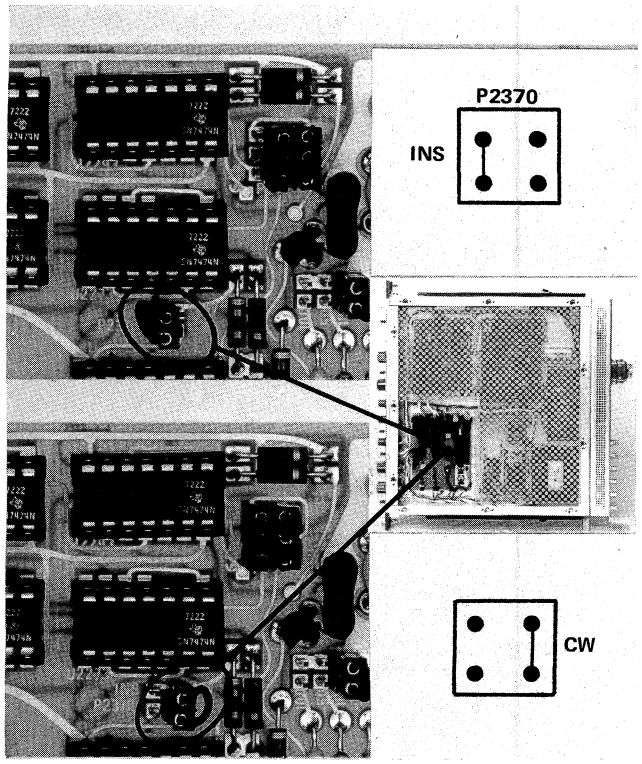

Fig. 2-3. Physical location of P2735: for continuous noise.

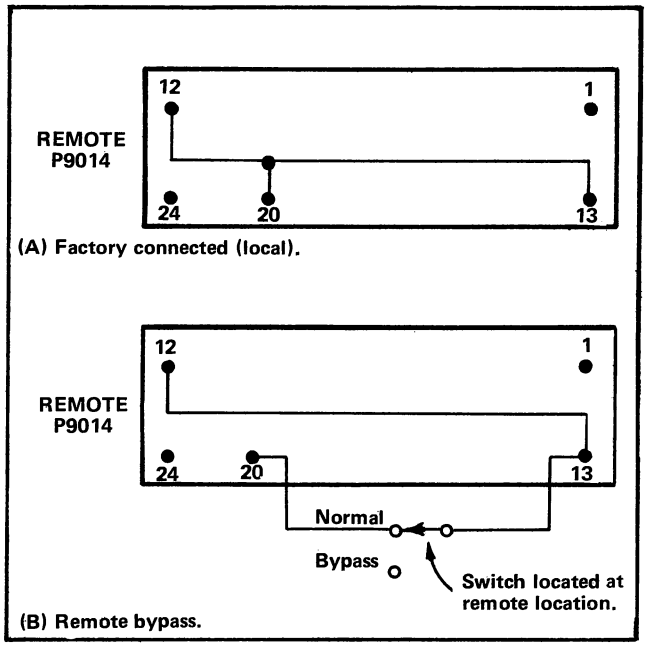

Fig. 2-4. Wiring diagram for Remote Bypass of the 1430.

CIRCUIT DESCRIPTION

CIRCUIT DESCRIPTION

This section of the manual describes the electrical operation of circuits within the 1430 using a "block" description. The description is organized in relation to the individual diagrams and a master signal flow block diagram given on separate pull-out pages in the Diagram Section. Each block described is shown in these diagrams. Where new or unusual circuitry has been used or where additional detail is necessary, it is fully explained.

DIAGRAM 1

The Sync Lock and Vertical timing circuitry reprocesses the incoming video composite sync, synchronizes the 1430 to the reprocessed composite sync, and generates the timing signals required for operation of the 1430.

Sync Separator

The circuit removes sync from the externally applied PROGRAM IN composite video signal. Processing of the composite sync reduces any degradation of the incoming composite sync, such as white noise, mains hum, etc. Processing of the composite sync is accomplished by clamping the sync tip level of the externally applied composite video to a predetermined level, then adjusting the blanking level by controlling the overall circuit gain.

Fig. 3-1 is a block diagram of the Sync Separator circuit and the description that follows is organized with respect to the block diagram and diagram 1.

The sync tip of the external video signal (applied to the PROGRAM IN connector) is clamped at the sync tip level by the Sync Tip Comparator circuit, consisting of voltage

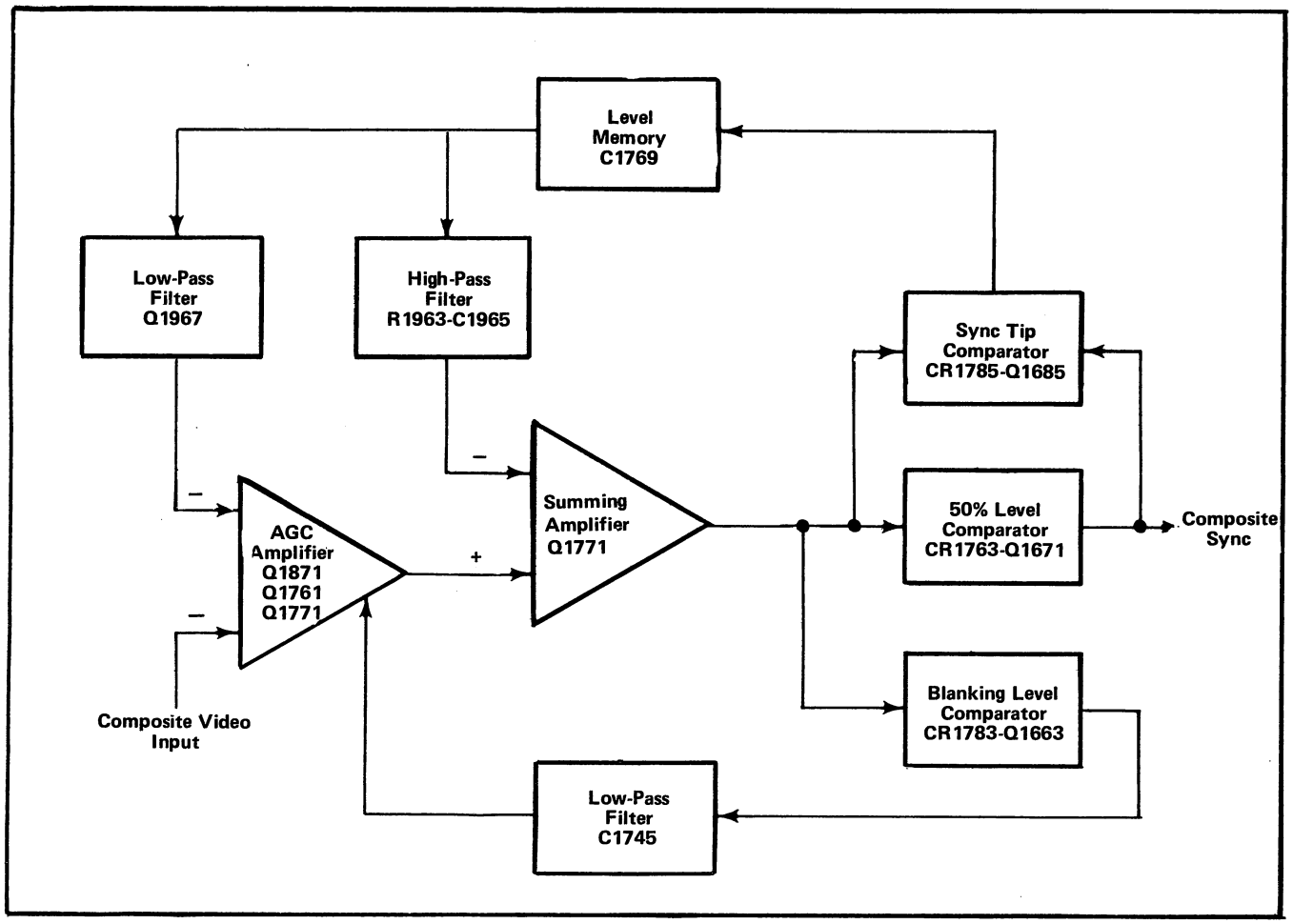

Fig. 3-1. Block diagram of the Sync Separator.

comparator CR1785 and Q1685, operating as a current switch. The comparator is rate-limited and uses the DC coupled sync to activate it. Once the comparator is switched, any tilt from the field or the line rate sync tips is eliminated. The rate limiting allows the feedback loop (through Q1775 and Q1773) to open at the trailing edge of the sync pulse, and makes the loop unresponsive to impulse noise. It also allows the Level Memory (C1769) to average the white noise on the sync tip during the time the loop is closed; this determines sync tip level.

The output from the Level Memory is applied to two filters. The high frequency errors (sync tip tilt) pass through the High Pass Filter (R1963 and C1965) to control the Summing Amplifier (Q1771). The low frequency components are fed back via the Low Pass Filter (Q1967) to drive the AGC Amplifier (Q1871, Q1761, and Q1771). This eliminates most mains frequency interference.

The 50% Level Comparator (CR1763 and Q1671) processes the sync at the 50% amplitude point between the sync tip level and the blanking level, ensuring correct sync width.

The Blanking Level Comparator (CR1783 and Q1663) uses the difference in the duty factor between the sync pulse width and blanking width to determine the blanking level. This method allows the entire system to function, since timing information is not required to close the AGC Loop. The Low Pass Filter (C1745) averages the output of the comparator; this voltage controls the overall system gain through Q1761.

Horizontal Integrator, AFC Sampler, 1 MHz Oscillator, 64 μs Counter, and Delayed Feedback

A 1 MHz oscillator generates a pulse that is counted down to the line rate. The line rate gate is then compared to the external composite sync. Any timing error between these two signals will produce an error voltage to change the oscillator frequency. This action keeps the 64 μs counter in step with the external sync.

1 MHz Oscillator. Q1463 and Q1465 are the active components of the modified Colpitts oscillator. CR1181, L1367, C1471 and C1361 are the frequency-determining constants. (For 625 Line Systems, C1105 is included.) Substaining feedback is provided via C1471. C1483 provides temperature compensation. The output of the oscillator, collector of Q1465, consists of positive-going pulses (limited sine-waves) which are then used to toggle the 64 μs counter.

64 μs Counter. U1721, U1801, and U1831 form the stage. Each counter is level sensitive (positive) and divides the 1 MHz toggle pulses in a divide-by-2, divide-by-4, . . . divide-by-64 sequence.

Delayed Feedback. U1501B combines three of the 64 μs counter outputs to produce a negative gate, approximately 8 μs wide, for each horizontal line. During the 8 μs interval, this pulse disconnects CR1451, which allows C1461 to charge towards +15 volts at an approximate rate of 0.5 V/μs. (Charge path via R1445.)

The ramp is then compared against the setting of R1001 (Insert Delay) by voltage comparator Q1255 and Q1353. When the ramp voltage exceeds the delay voltage, Q1353 is turned off and a ringing pulse is developed across L1151. This pulse is then peak-detected by CR1345 to drive the AFC Sampler.

AFC Sampler. Q1363 and Q1453 form the AFC Sampler. When Q1453 is turned on, Q1363 acts as a gate which allows the voltage obtained by the ramp in the Horizontal Integrator to be transferred to the variable capacitance diode CR1181, which controls the 1 MHz oscillator.

Horizontal Integrator. During sync time, the stage produces a ramp which is sampled to control the 1 MHz Oscillator. Composite sync is coupled to switching pair Q1063-Q1065. This switch, during sync time, allows current determined by R1081 to charge C1185 via Q1065. This produces a positive (approximately 3 V/μs) ramp, made linear by Q1165. At approximately 4.7 volts positive, Q1163 is saturated to clamp the ramp, preventing breakdown of Q1363 in the AFC Sampler circuit.

At the end of sync time, Q1063 is turned on, and current via R1083 causes the ramp to go in a negative direction towards 0 volts at an approximate rate of 2.5 V/μs, made linear by Q1165. Ramp voltage at sample time is transferred via the AFC Sampler stage to the 1 MHz Oscillator, which brings the 64 μs Counter into step with the external sync.

Vertical Integrator

The vertical integrator produces a ramp during the vertical serration pulses, which is then applied to the Peak Detector. This integrator is similar to the Horizontal Integrator except for circuit values.

Peak Detector

On the last vertical serration pulse, Q1223 is biased on by the integrated serration pulses, producing one negative pulse per field to drive the Field Recognition (in addition, PAL Delay in 625 Line Systems) and Line Counter circuits.

Field Recognition

Q1225 and U1535A & B are the active components of this set-reset stage, and identify field 1 and field 2 (fields 1-3 and fields 2-4 in 625 Line Systems).

The circuit is driven by the field pulse obtained from the Peak Detector and by the 8 μs gate obtained from the Delayed Feedback Stage. The set-reset stage recognizes field 1 (fields 1-3 in 625 Line Systems) when the 8 μs gate and field pulse are coincident; no coincidence with the 8 μs gate is required for field 2 (fields 2-4 in 625 Line Systems) recognition. See Fig. 3-2 for timing waveforms.

Line Counter

This stage consists of U1535C & D, U1631, and U1601. Its purpose is to provide pulses which correspond to (1) 525 Line Systems; lines 7, 8, 9, . . . 20, and 21 or (2) 625 Line Systems; lines 8-321, 9-322, . . . 22-335. These pulses are then used to select the lines on which noise measurements, during insertion time, can be made.

U1535C & D is a set-reset flipflop and is used to preset a ÷16 counter (U1631). The counter is toggled at a line rate which drives a decoder (U1601). The decoder, in turn, provides the line pulses.

PAL Delay

This stage is used for 625 Line Systems only, and is used to delay the field pulse so that the line counter is delayed 4 lines. This is because in 625 Line Systems, line 1 starts coincident with the first vertical serration pulse rather than

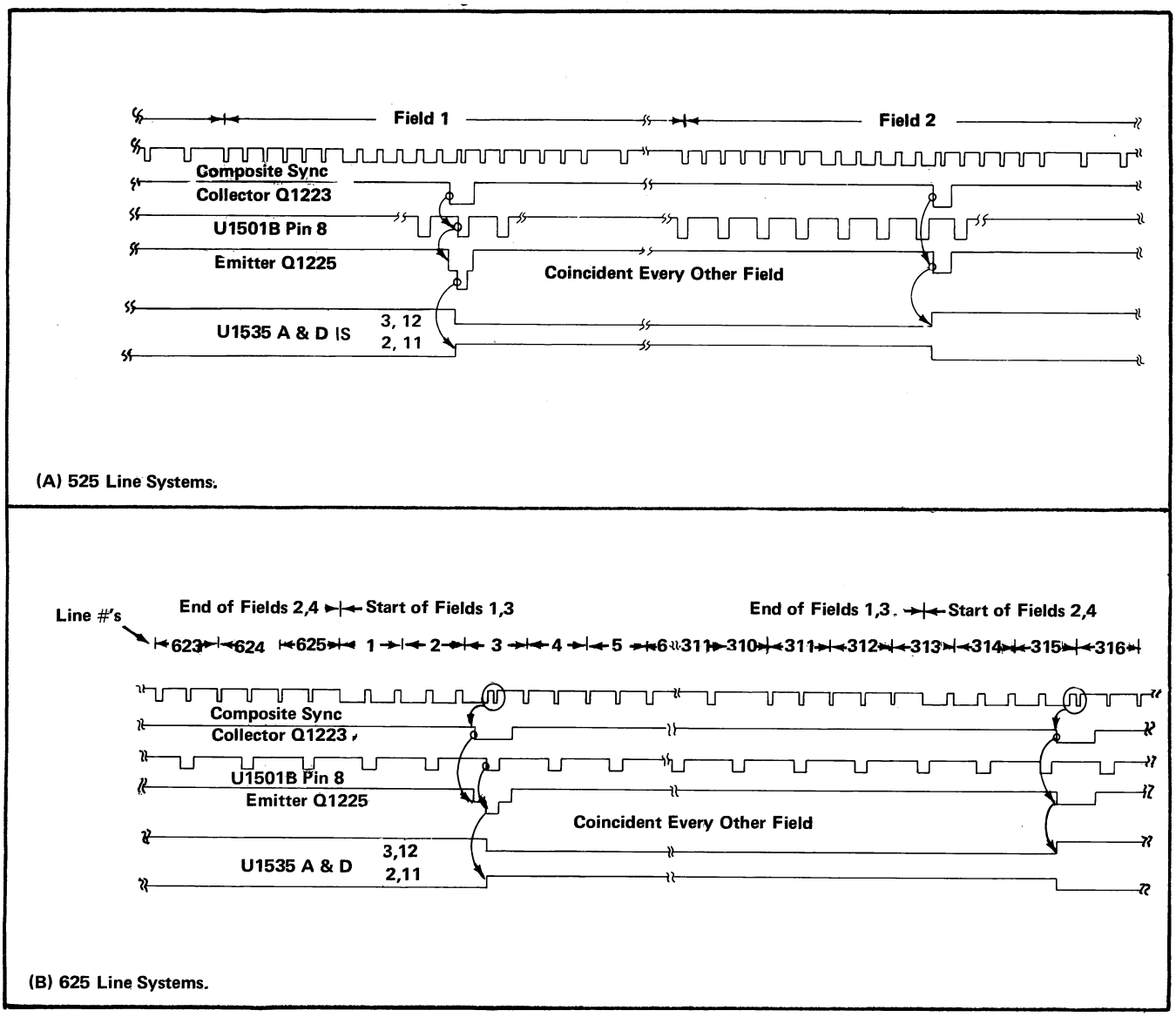

Fig. 3-2. Field recognition timing waveforms.

the first equalizing pulse, hense 3 lines must be delayed; the fourth line delay enables the line counter to reach line 22. This delay is accomplished by U1401, and one-shot multi, which delays the reset to U1535C & D.

Field Timing Preset Driver

U1501A is used to provide the correct polarity of drive signal to preset the Field Counter (see discussion for diagram 2).

DIAGRAM 2

The circuitry on diagram 2 is used to: (1) generate horizontal sync for use in H SYNC ADDED MODE, (2) time and generate the pedestal for use in the program channel, (3) time and generate the pedestal on which noise measurements are made, and (4) recognize loss of incoming video.

H Sync Generator

This stage consists of U2021A & C, and U2210A & D. Driven by the 8 μs gate obtained in the Delayed Feedback circuitry (see diagram 1) and two signals from the 64 μs counter (see diagram 1), the stage provides a switching pulse every 64 μs to allow H Sync to be generated.

H Sync Amplifier

The stage consists of current switch CR2421, CR2321, and Q2427. When both CR2421 and CR2321 are reverse biased, current determined by R2423 is switched through Q2427. The H Sync current is then amplified by the Monitor Output Amplifier (see diagram 3) and available at the MONITOR OUT in the H SYNC ADDED MODE.

Program Pedestal Deletion/Insertion Timing

This stage consists of U2031, U2131, U2231, and U2211A & B and is used to provide the timing signal required to drive the Program Deletion/Insertion Logic so that the program pedestal may be inserted on the program signal via the Program Switch.

U2031, U2131, and U2231 combine, in matrix form, the various 64 μs Counter outputs, so that the inserted program pedestal may be started and stopped as programmed by P2220 and P2230. (See Operating Instructions; Operating Changes, this manual for details.)

U2211A and U2211B provide the switching pulses to enable the Pedestal Amplifier and drive the Program Deletion/Insertion Logic stages.

Program Field & Line Selection

This stage consists of active components U2021B and U2251A. Its purpose is to allow the operator to select that line and field on which the pedestal may be inserted onto the program signal. The output drives the Program Deletion/Insertion Logic stage.

Pedestal Amplifier

This stage consists of current switch CR2321 and Q2381. Current, as set by R2453 and determined by the position of P2360, is switched through Q2381 during pedestal time. This current is then shaped by a filter and is used to drive the Program Switch (see diagram 3).

Program Deletion/Insertion Logic

This stage consists of U2251B and is used to provide a switching pulse at the appropriate time so that the pedestal is inserted onto the program signal via the Program Switch for use at the PROGRAM OUT.

Field Timing Preset

Q2073, when turned on during line 10, presets the Field Timing stage.

Field Timing

This stage consists of U2083, U2291, U2271, U2273, and U2293. It produces pulses that prevent noise insertion during vertical sync.

The counter output is dependent upon the position of P2381 which (1) clears or presets the counters and (2) selects the desired output. For 525 Line Systems, U2293A pin 6 is the output and consists of a pulse whose duration is 252 lines. For 625 Line Systems, U2293B pin 8 is the output and consists of a pulse whose duration is 310 lines.

The output pulse, either pin 6 of U2293A or pin 8 of U2293B, is inverted by U2210B for use in the Monitor Insertion Timing stage.

No Incoming Video Lamp & Relay Driver

This stage, driven by the Field Recognition stage, is used: (1) should loss of incoming program signal occur, to provide a turn on voltage to DS9320 to indicate status and (2) should loss of incoming program sync occur, to switch the bypass relay. (In H SYNC ADDED MODE, the bypass relay is held in that state which provides PROGRAM IN signal at all times.)

Q2437, an inverter, is turned on by a rectified DC level which corresponds to the field square-wave. Q2431 is turned on (saturated) and holds the bypass relay so that the PROGRAM IN signal passes through the 1430. With Q2431 saturated, Q2561 is off and DS9320 is extinguished. With loss of sync, Q2437 turns off, Q2431 turns off, and Q2561 turns on. In the H SYNC ADDED MODE, +15 volts is applied to the bypass relay via S9340.

DIAGRAM 3

The circuitry on diagram 3 is used to condition the PROGRAM IN signal for further processing (required for insertion of pedestal or noise), routes the internally generated and externally applied signals during selected intervals so that a composite of each is available at the PROGRAM OUT or MONITOR OUT connectors.

Program Amplifier

The Program Amplifier is an AC-coupled operational amplifier. AC coupling removes any DC component that may be applied to the PROGRAM IN.

Q3041 provides constant current, determined by Q3043, for emitter coupled amplifier Q3055 and Q3057. Current through Q3057 flows through R3011 (Rf of operational amplifier Q3021-Q3023) to set the overall circuit gain.

The output signal (emitter of Q3021) is applied to the Program Switch and the Weighting Filter Driver after DC Restoration.

Back Porch Gate Generator

This stage is used to generate a pulse during back porch time to drive the Back Porch Clamps.

Q3175, normally on, is driven by reprocessed composite sync (negative-going). On the trailing edge of each sync pulse, Q3175 turns off (current shunted via Q3173), producing a pulse which is differentiated by C3171 and R3163. When Q3175 turns back on, the differentiated pulse turns Q3133 (normally on) off. A negative-going pulse (that has been delayed from sync) is obtained at the collector of Q3133, such that during back porch time, the Back Porch Clamps will DC-restore the program signal via the Program Amplifier stage.

Back Porch Clamps

Q3135 and Q3229 are the active circuit elements. During back porch time, they are biased on, which effectively grounds C3003 and C3005. This DC-restores the signal.

Weighting Filter Driver

This stage is used to drive the Monitor Switch (U3547). Program signal via C3003 is applied to emitter followers Q3211A & B. When the front-panel WEIGHTING FILTER switch (S9480, see diagram 7) is set to OUT, the program signal is applied to the front-panel CAL/GAIN switch, S9460. When the WEIGHTING FILTER switch is set to IN, the program signal is applied to the weighting filter. (See discussion of diagram 4.)

S9460 is used so that either unity gain or variable gain (GAIN) of the program signal is available. The output is then applied to the Monitor Switch.

Q3111 (controlled by the NOISE MEASUREMENT MODE switch) is used to inhibit any program signal from being applied to the Monitor Switch when H SYNC ADDED MODE has been selected. In this mode, Q3111 is turned on, which grounds the input to the Weighting Filter Driver stage.

Program and Monitor Switches

U3363 and U3547 are used to route the program signal to the Output Amplifiers, (Program signal via Q3265A & B to the Program Switch, Program signal via the Weighting Filter Driver to the Monitor Switch) except when vertical interval test signals are inserted. During insertion time, the switches route internally-generated signals to the Output Amplifier.

Basically, the circuitry acts like two double-pole double-throw switches. In one position, signals applied to pins 2 and 15 reach the differential output, pins 12 and 13. In the other position, signals at pins 7 and 10 reach the output. Switching between the two channels of each switch is dependent upon the condition of pin 4. (See diagram 3.) Signals reaching the output of each switch are also dependent upon the condition of pin 6 (if high, no output will be obtained). Thus, the incoming program signal is applied to one channel, the inserted signal to the other; dependent upon switch settings, a combined output is obtained.

Output Amplifiers

The Output Amplifiers are operational amplifiers driven by current developed by the differential voltage across R3467 and R3661. This current, through R3421 and R3643 (Rf for each amplifier), sets the gain of each stage. These operational amplifiers provide the low impedance necessary to drive the PROGRAM OUT and MONITOR OUT.

In the H SYNC ADDED MODE, internally generated H Sync current through R3641 (Monitor Output Amplifier) enables the H Sync to be available at the MONITOR OUT.

DIAGRAM 4

The circuitry on diagram 4 is used to: (NOISE) generate the noise for use in making noise measurements, (WEIGHTING NETWORK) evaluate the spectral content of the incoming noise, and (LOW PASS FILTER) measure the continuous random noise.

Noise Generator

This stage uses the thermal characteristics of two resistors (R4321 and R4323) and one transistor (Q4431) to generate noise. The resistor noise (main source of noise) may be computed by the formula:

$e = \sqrt{4KT\Delta fR}$, where K equals Boltzmann Constant, T equals 300°K, Δf equals 5 MHz, and R equals 7.5 kΩ (parallel combination of R4321 and R4323).

The generated noise is then applied to the Noise Amplifier.

Noise Amplifier

Q4411-Q4431, Q4611-Q4613, and Q4727-Q4737 are connected as operational amplifiers. The ratio of R4409, R4517, and R4835 to R4423, R4533, and R4931 respectively, set the gain of the stage. (0 dB = 700 mV RMS). C4613 and R4717 affects the low frequency cutoff, hence noise is flat (within the tolerance listed in the Specification Section of this manual.)

Weighting Network and Low Pass Filter

Refer to the Specification Section of this manual for details.

DIAGRAM 5

The Low Voltage Power Supply circuit provides three regulated supplies; +15 volts, +5 volts, and −15 volts. Electronic regulation is used to provide stable, low ripple output voltages. All the supplies are current-limited to prevent instrument damage in the event that a supply is shorted to ground. The primary circuit of the transformer can be connected to be operated from either a 115 VAC nominal line voltage source or a 230 VAC nominal line voltage source.

−15 V Supply

The −15 volt supply provides the reference voltage for the +5 and +15 volt supplies. The reference for the −15 volt supply is a 9.1 volt zener diode, VR9850.

The output from the secondary winding (pins 6 and 7 of T9001) is rectified by a full-wave rectifier consisting of CR9870, CR9872, CR9874, and CR9876. The rectified voltage is filtered by C9061 and applied through a −15 volt series regulator, Q9805, to the load. Series regulator Q9085 and its driver, Q9850, are controlled by a voltage comparator consisting of Q9854 and Q9856 with associated components. C9852 filters any noise generated by the −15 volt reference, VR9850.

Q9852 and associated components, is an overload protection circuit. During excessive load current, Q9852 (normally off) turns on, which turns Q9850 and Q9085 off, disconnecting the −15 volt supply.

+5 and +15 Volt Supplies

Both supplies are similar to the −15 volt supply.

DIAGRAM 6

The circuitry on diagram 6 is used to: (Relay) route the PROGRAM IN signal to the PROGRAM OUT in the event of instrument malfunction, loss of power, etc., or to route the PROGRAM IN signal to the active circuits for further processing before applying the processed signal to the PROGRAM OUT; and (Interface) provide signal connection paths between the front- and rear-section of the 1430.

K9967 routes the PROGRAM IN signal, J-P9010 is the interface connector, and J-P9014 is the REMOTE connector. (See Operating Instructions; Operating Changes, this manual for REMOTE information.)

DIAGRAM 7

The circuitry on diagram 7 is used to provide front-panel switching for control of the 1430.

MAINTENANCE AND CALIBRATION

This section of the manual contains information for use in maintenance and calibration of the 1430 as follows:

Maintenance

Preventive Maintenance: Cleaning, lubrication, visual inspection, etc.

Troubleshooting: Aids for isolating trouble to a particular stage, etc.

Corrective Maintenance: Replacement procedures and parts ordering information.

Calibration

Test Equipment Required: A list of recommended test equipment used to calibrate the 1430.

Procedure: Step-by-step instructions for returning the 1430 to specification.

MAINTENANCE

PREVENTIVE MAINTENANCE

Preventive maintenance consists of cleaning, visual inspection, and lubrication. Preventive maintenance performed on a regular basis may prevent instrument breakdown, and will improve the reliability of this instrument.

Cleaning

General. The 1430 should be cleaned as often as operating conditions require. Accumulation of dirt in the instrument can cause overheating and component breakdown. Dirt on components acts as an insulating blanket that prevents efficient heat dissipation. It also provides an electrical conduction path.

CAUTION

Avoid the use of chemical cleaning agents which might damage the plastics used in this instrument. Avoid chemicals which contain benzene, toluene, xylene, acetone, or similar solvents.

Exterior. Loose dirt accumulated on the outside of the 1430 can be removed with a soft cloth or small paint brush. The paint brush is particularly useful for dislodging dirt on and around the front-panel controls. Dirt which remains can be removed with a soft cloth dampened in a solution of water and mild detergent. Abrasive cleaners should not be used.

Interior. Dust in the interior of the instrument should be removed occasionally due to its electrical conductivity under high-humidity conditions. The best way to clean the interior is to blow off the accumulated dust with dry, low velocity air. Remove any dirt which remains with a soft paint brush or a cloth dampened with a mild detergent and water solution. A cotton-tipped applicator is useful for cleaning in narrow spaces.

Lubrication

The reliability of switches and other moving parts can be maintained if they are kept properly lubricated. Use a cleaning-type lubricant (e.g., TEKTRONIX Part No. 006-0172-00) for switch contacts. This lubricant does not affect the electrical characteristics of the switch. To lubricate the switch detent, use a heavier lubricant (e.g., TEKTRONIX Part No. 006-0219-00). Do not over-lubricate.

Visual Inspection

The 1430 should be inspected occasionally for such defects as broken connections, loose or disconnected pin connectors, improperly seated solid-state devices, damaged circuit boards and heat-damaged components.

The correct procedure for most defects is obvious; however, particular care must be taken if heat-damaged components are found. Overheating usually indicates other trouble in the instrument; therefore, it is important that the cause of overheating be corrected to prevent recurrence of the damage.

Transistor and Integrated Circuit Checks

Periodic checks of the transistors and integrated circuits (IC's) used in the 1430 are not recommended. The best indication of performance is the actual operation of the component in the circuit. Performance of the circuit is thoroughly checked when performing either the performance check or calibration procedure. Any substandard transistors or integrated circuits will usually be detected at that time.

TROUBLESHOOTING

The following information is provided to facilitate troubleshooting of the 1430. Information contained in other sections of this manual should be used along with the following information to aid in locating the defective component. An understanding of the circuit operation is very helpful in locating troubles.

Troubleshooting Aids

Diagrams. Circuit diagrams are provided on foldout pages at the rear of this manual. Each component, its electrical value and circuit number are shown on the diagrams. In addition, typical voltages which can be expected are also shown.

Each diagram has been assigned a diagram number and name. For example, the first diagram has been assigned the number 1 and is called SYNC LOCK & VERTICAL TIMING. Notice the solid blue line that surrounds the circuitry on this diagram. This line is used to identify a particular circuit board on which the components are physically located. This reference allows for correlation between the diagrams, circuit boards, and electrical parts list.

Circuit Boards. The Adjustment pull-out page in the diagram section shows the location of each circuit board within the instrument. In addition, each circuit board is shown (full view) opposite the appropriate diagram in the diagram section. Each electrical component on the board is identified by its circuit number. In most cases, these circuit numbers were assigned on a grid system as a convenience to the user of the instrument. For example, notice the circuit board photo opposite diagram 1. The upper left hand corner of this board has been assigned numbers around 1000. Proceeding left to right, the numbers go towards 1100 at the upper right hand corner. From top to bottom, the numbers increase to 1900 at the bottom left corner and 1999 at the bottom right corner. Using this method, the physical location of each component is readily available.

Waveforms. Important waveforms (typical) are given opposite the appropriate diagram in the diagram section. These waveforms aid in determining if a circuit is functioning properly.

Wire Color Codes. All insulated wires in the 1430 are color coded to facilitate circuit tracing. Table 4-1 summarizes the coding system used in the 1430.

Resistor Color Code. In addition to the brown composition resistors, metal film resistors (identified by their gray or light blue color) are used in the 1430. The resistance values of composition and metal film resistors are color-coded on the components with the standard EIA color code.

Capacitor Marking. The capacitance value of a common disc capacitor or small electrolytic is marked in microfarads on the side of the component body. The white ceramic capacitors used in the 1430 are color-coded in picofarads using a modified EIA code. The new "tear drop" capacitors are color-coded in microfarads using a modified EIA code, with the dot indicating both voltage and the positive (+) side.

Power Cord Conductor Identification

Conductor	Color	Alternate Color
Ungrounded (Line)	Brown	Black
Grounded (Neutral)	Blue	White
Grounding (Earthing)	Green-Yellow	Green-Yellow

Troubleshooting Techniques

This troubleshooting procedure is arranged in an order which checks the simple possibilities before proceeding with extensive troubleshooting.

1. Check Control Settings. Incorrect control settings can indicate trouble that does not exist. If there is any question about the correct function or operation of any control, see the Operating Instructions.

2. Check Operation of Associated Equipment. Many times malfunction of equipment can be traced to associated equipment.

3. Visual Check. Visually inspect the portion of the instrument in which the trouble is located. Look for unsoldered connections, loose pin connectors, broken wires, damaged circuit boards, damaged components, etc.

TABLE 4-1

Color Code	Significance
Black	Chassis Ground
White on Black	Floating Ground
Yellow on Green	Safety Ground
Brown[1]	Filament and Heaters
Gray[1]	AC Line
White[1]	Signal
Red[2]	B+
Violet[2]	B−

[1] Color Stripes are used on these wires as an aid to circuit tracing.

[2] Color Stripe on wire indicates position of supply with respect to 0 volts (e.g., a black stripe on a red wire would be the first voltage in the positive direction). If a second stripe is used (white only), this indicates a non-regulated supply.

4. Check Circuit or Instrument Calibration. The apparent trouble may only be a result of misadjustment and may be corrected by calibration. Complete calibration instructions are given in this section.

5. Isolate Trouble to a Circuit. To isolate trouble to a circuit, note the trouble symptoms. The symptoms often identify the circuit in which the trouble is located. When trouble symptoms appear in more than one circuit, check affected circuits by taking voltage and waveform readings.

Incorrect operation of all circuits often indicates trouble in the power supply. Check first for correct voltage of the individual supplies. A defective component elsewhere in the circuit can also appear as a power supply trouble, and affect the operation of other circuits.

The Circuit Description section of this manual can be used as a guide for isolating a trouble. This description explains how the various signal components are combined to form the video signal. By using the front-panel controls and checking the signals at the BNC connectors, it is possible to determine circuits that are functioning properly and those that are not.

When a trouble is isolated to the smallest possible area, proceed with steps 6 through 8 in this troubleshooting procedure to locate the defective component(s).

6. Check Circuit Board Interconnections. After the trouble has been isolated to a particular area or circuit, check the pin connectors on the circuit board for correct connection.

The pin connectors used in this instrument also provide a convenient means of circuit isolation. For example, a short in a power supply can be isolated by disconnecting the power distribution pin connectors for the voltage at the Power Supply board when making resistance to ground checks.

7. Check Voltage and Waveforms. Often the defective component can be located by checking for the correct voltage or waveform in the circuit. Typical voltages and waveforms are given in the Diagrams section.

NOTE

Voltages and waveforms given on the diagrams are not absolute and may vary slightly between instruments. To obtain operating conditions similar to those used to take these readings, see the back side of the Diagrams Title page.

CAUTION

Due to the component density on the circuit boards, care should be taken with meter leads and probe tips. Accidental shorts can cause abnormal voltages or transients which may destroy many components.

WARNING

"Ground lugs" are not always at ground potential. Check the diagrams before using such connections as a ground for the voltmeter test prod or oscilloscope probe. Some transistor cases may be elevated.

8. Check Individual Components. The following procedures describe methods of checking components in the 1430. Components which are soldered in place should be checked without removal, by isolating the component if circuit conditions allow. If component isolation is questionable unsolder one end.

a. Transistors (excluding FETS, Field Effect Transistors). The best check of transistor operation is actual performance under operating conditions. If a transistor is suspected of being defective, it can best be checked by substituting a new transistor. However, be sure that circuit conditions are not such that a replacement might also be damaged. If substitute transistors are not available, use a dynamic tester such as the TEKTRONIX Type 576.

b. Diodes. A diode can be checked for an open or shorted condition by measuring the resistance between terminals.

CAUTION

Do not use an ohmmeter range that has a high internal current. High current may damage the diodes.

9. Repair and Readjust the Circuit. If any defective component or part is located, follow the replacement procedure given in this section. Be sure to check the performance of any circuit that has been repaired or that has had any electrical components replaced.

CORRECTIVE MAINTENANCE

Corrective maintenance consists of component replacement and instrument repair. Special techniques or procedures required to replace components in this instrument are described here.

Obtaining Replacement Parts

All electrical and mechanical replacement parts for the 1430 can be obtained through your local TEKTRONIX Field Office or representative. However, many of the standard electronic components can be obtained locally in less time than is required to order from Tektronix, Inc. Before purchasing or ordering replacement parts, consult the Parts List for value, tolerance, and rating.

NOTE

When selecting replacement parts, it is important to remember that the physical size and shape of a component may affect its performance at high frequencies.

Multiple Terminal Connector Holders. Most inter-circuit connections between the circuit boards, or between the boards and chassis mounted components, are made through pin connectors. The terminals in the connector holder are identified with numbers. Connector orientation to the circuit board is keyed with triangles, one on the holder and one on the circuit board. See Fig. 4-1.

Circuit Boards. If the circuit board is damaged beyond repair, the entire assembly including all soldered-on components can be replaced.

Transistor and Integrated Circuit Replacement. Transistors and integrated circuits, (IC's) should not be replaced unless they are actually defective. Replacement or exchange of components may affect the calibration of the instrument. If a transistor or integrated circuit is removed during routine maintenance, return it to its original socket.

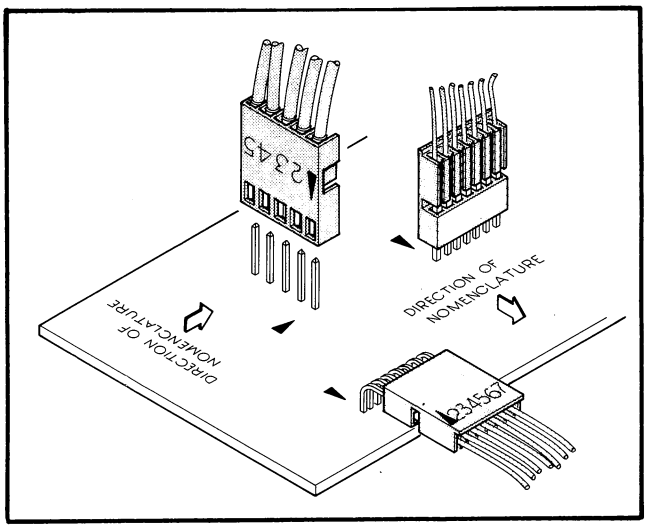

Fig. 4-1. Multipin circuit board connectors.

Any replacement component should be of the original type or a direct replacement. Bend the leads to fit the socket and cut the leads to the same length as on the component being replaced. See Fig. 4-2 for basing diagrams.

After any component is replaced, check the operation and calibration of the associated circuits.

Switches. If a switch is defective, replace the entire assembly. Replacement switches can be ordered by referring to the Part List for the applicable part numbers.

Power Transformer Replacement. If the power transformer becomes defective, contact your local TEKTRONIX Field Office or representative for replacement. Replace only with a direct replacement TEKTRONIX transformer.

Power Input Connector and RFI Filter Replacement. The Power Input Connector and RFI Filter is replaceable as a unit and repair should not be attempted. If replacement is necessary, observe proper polarity to assure instrument protection.

The narrow blade (terminal number 4) should show continuity to terminal number 3, which connects to fuse F9201, see diagram 5. (The filter contains an internal non-replaceable fuse between these two terminals.) Use care when soldering to terminals numbers 1 and 3, as excess solder could possibly short the filter case.

CALIBRATION

This section of your manual is provided as a guide for recalibration of the 1430. Limits and tolerances in the procedure are given as guides and are not instrument specifications unless given in the Specification portion of the manual.

Test Equipment Required

All of the following test equipment, or its equivalent, is required for recalibration. Specifications given are the minimum necessary for accurate indication. All test equipment is assumed to be correctly calibrated and operating within the given specification. If equipment is substituted, it must meet or exceed the specifications of the recommended equipment.

1. Test Oscilloscope. Bandwidth, DC to 30 MHz; minimum deflection, 1 mV/div; two input channels with provisions for independent or differential operation. For example, a TEKTRONIX Type 547 Oscilloscope with a Type 1A5 Plug-In Unit was used for the procedure.

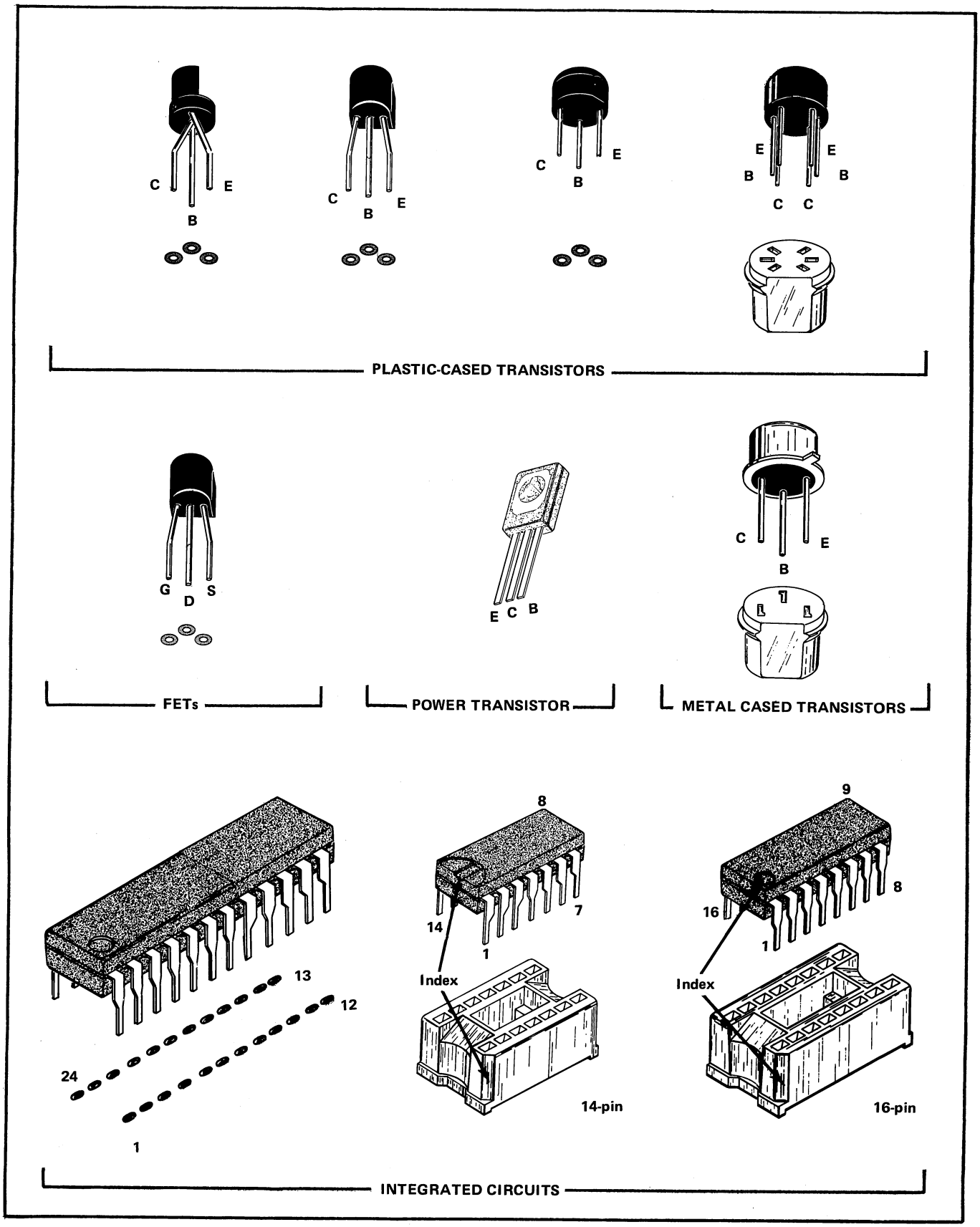

Fig. 4-2. Transistor and Integrated Circuit basing diagrams.

2. DC Voltmeter. Accuracy, within 0.1%. For example, Fluke Model 825A.

3. Voltage Control Unit[3]. For example, GENERAL RADIO W10MT3W Metered VARIAC Autotransformer.

4. Video Signal Source. For example, a TEKTRONIX 147 was used for the procedure. (For 625 Line Systems, a TEKTRONIX 148 is recommended.)

5. Vectorscope. For example, a TEKTRONIX 520A was used for the procedure. (For 625 Line Systems, a TEKTRONIX 521A is recommended.)

6. RMS Voltmeter. Must be capable of measuring 70 mV RMS within 1%; must be capable of indicating dB, accurate within 1 dB. For example, HEWLETT-PACKARD Model 3400A.

7. Spectrum Analyzer[4]. For example, a TEKTRONIX 1401A was used for the procedure.

8. Constant Amplitude Signal Generator. For example, a TEKTRONIX Type 191 was used for the procedure.

9. Digital Counter[5]. For example, HEWLETT-PACKARD Model 5245L Electronic Counter.

10. Return Loss Bridge. TEKTRONIX Part No. 015-0149-00.

11. Minimum Loss Attenuator. TEKTRONIX Part No. 011-0057-00.

12. Cables (3). TEKTRONIX Part No. 012-0074-00.

13. Termination. Type: end-line. TEKTRONIX Part No. 011-0102-00.

14. Termination. Type: feed-through. TEKTRONIX Part No. 011-0103-00.

15. Adapter. Type: BNC-T. TEKTRONIX Part No. 103-0030-00.

[3] Used to check power supply ripple; step 2 of procedure.

[4] Used to check or adjust noise bandwidth; step 7 of procedure.

[5] Used to check low pass filter; step 15 of procedure.

16. Adapter. Type: GR to BNC Female. TEKTRONIX Part No. 017-0063-00.

17. Cable. TEKTRONIX Part No. 012-0001-00.

18. 5 MHz Low Pass Filter. TEKTRONIX Part No. 015-0213-00.

19. Weighting Network. TEKTRONIX Part No. 015-0215-00.

20. 10X Probe. For example, TEKTRONIX Probe P6008. TEKTRONIX Part No. 010-0129-00.

21. 1X Probe[3]. For example, TEKTRONIX Probe P6011. TEKTRONIX Part No. 010-0190-00.

General. The following procedure is arranged in a sequence designed for calibration, with minimum interaction of adjustment. All 1430 front- and rear-panel controls and connectors are CAPITALIZED. Internal adjustments are initial-capitalized only. The procedure uses the 525 Line System, but is adaptable to 625 Line Systems.

NOTE

If adjustments are made on the power supplies, the entire procedure must be completed.

PROCEDURE

1. Setup

a. Set the 1430 POWER switch to ON and the PROGRAM CHANNEL PROGRAM PEDESTAL AND NOISE DELETION switch to ON. The remaining 1430 controls and switches may be set to any position desired.

b. Connect the 1430 to the Voltage Control Unit.

c. Connect an external 1-volt peak-to-peak multiburst composite video signal via a 75Ω coaxial cable to the 1430 PROGRAM IN connector.

NOTE

For 525 Line Systems, the multiburst signal should have a white flag at 714.6 mV (100 IRE). For 625 Line Systems, the white flag should be 700 mV.

d. Allow at least 5 minutes warm up before continuing.

2. Power Supply

a. Voltage. Connect the DC Voltmeter between chassis ground and the power supply under test. (All adjustment locations are shown on a pull-out page in the diagram section.) Check as follows:

−15 V	−14.85 to −15.15 volts	R9851 (−15 V Adj)
+15 V	14.85 to 15.15 volts	R9831 (+15 V Adj)
+5 V	4.95 to 5.05 volts	R9801 (+5 V Adj)

b. Ripple. Connect the 1X probe between the test oscilloscope and the power supply under test. Ripple content should be 10 mV peak-to-peak or less from 104 VAC to 126 VAC.

c. Disconnect the Voltage Control Unit. Connect the 1430 directly to a suitable power source.

3. Timing

a. 1 MHz Oscillator. Connect a 10X probe between the test oscilloscope and TP1171. Externally trigger the test oscilloscope from an external composite sync source. Observe the display at a line rate (≈10 μs/div).

525 Line Systems: Adjust L1367 (1 MHz Osc) to center the aberration on the leading edge of the displayed trapezoidal waveform.

625 Line Systems: Adjust L1367 (1 MHz Osc) and C1195 (625 Line Offset) to center the aberration on the leading edge of the displayed trapezoidal waveform.

b. Insert Delay. Connect the 1430 PROGRAM OUT connector via a 75 Ω coaxial cable and 75 Ω feed-through termination to the test oscilloscope. Set the test oscilloscope to view the 1430 Inserted Pedestal. (See PROGRAM CHANNEL DELETION cover plate on the 1430 front-panel for information.)

Adjust—R1001 (Insert Delay) so that the inserted pedestal starts 10 μs from the leading edge of sync. Range of control should be + and −1 μs.

4. Output Amplitude & Response

a. Unwanted Pedestal. Change the connector on P2360 to the 0 IRE position.

Adjust—R3319 (Program Deletion Level) so that the inserted pedestal is aligned with the blanking level of the display. Pedestal amplitude should be 5 mV or less from blanking.

b. Pre-Amplifier. Change the connector on P2360 to the 100 IRE position.

Preadjust—R2453 (Pedestal Amplitude) to mechanical midrange.

Adjust—R3061 (Preamp Ampl) to match the white flag portion of the multiburst signal with the inserted pedestal.

c. Signal Input Level.

Adjust—R3467 (Program Gain) for an overall signal amplitude of 1 volt peak-to-peak. Should be within 0.5% of unity gain.

d. Program DC Level. Establish a "ground" (0 volts) reference on the test oscilloscope.

Adjust—R3449 (Program DC Level) to position the blanking level of the display to the reference established above. Should be 0 volts within 50 mV.

e. Monitor DC Level. Set the 1430 NOISE MEASUREMENT MODE switch to OFF. Change the cable on the PROGRAM OUT to the MONITOR OUT connector.

Adjust—R3663 (Monitor DC Level) to position the blanking level of the display to the reference established in part d. Should be 0 volts within 50 mV.

f. Monitor Gain.

Adjust—R3661 (Monitor Gain) for an overall signal amplitude of 1 volt peak-to-peak. Should be within 0.5% of unity gain.

g. Program Bandwidth. Change the cable on the MONITOR OUT to the PROGRAM OUT connector. Set the external video source for a Sin^2 Pulse & Bar signal.

Adjust—R3311 (Program Bandwidth) so that the modulated pulse is the same amplitude as the bar. Should be within 0.25% of the bar amplitude.

h. Program HF Compensation. Set the external video source for the Multiburst signal.

Adjust—C3365 (Program HF Comp) so that little or no tilt is evident between the first and last burst packets of the multiburst signal.

i. Pedestal Amplitude. Change the connector on P2360 to the 10 IRE position. Set the external video source for a 10 step staircase signal.

Adjust—R2453 (Pedestal Amplitude) so that the pedestal amplitude is the same as the first step of the staircase signal.

Check—Pedestal amplitude at 50 and 100 levels.

j. Pedestal Response.

Adjust—L2471 and L2481 (Pedestal Filter) for the best square corner on the top leading edge of the pedestal.

k. Switch. Observing the test oscilloscope display of the inserted pedestal, set the 1430 PEDESTAL INSERTION AND NOISE DELETION switch to OFF.

Check—Inserted pedestal should have been removed.

l. Monitor HF Comp. Change the cable on the PROGRAM OUT to the MONITOR OUT connector. Set the external video source for a Multiburst signal. Set the 1430 NOISE MEASUREMENT MODE switch to OFF and the PEDESTAL INSERTION AND NOISE DELETION switch to ON.

Adjust—C3563 (Monitor HF Comp) so that little or no tilt is evident between the first and last burst packets of the multiburst signal.

5. Noise Pedestal

a. Centering. Set the 1430 NOISE MEASUREMENT MODE switch to VITS, PEDESTAL IRE switch to 10 IRE, WEIGHTING FILTER switch to OUT, and the NOISE LEVEL dB switches to OFF, 0, and 0. Set the test oscilloscope to view that line and field as selected by the 1430 FIELD and LINE switches.

Adjust—R3503 (Level Center) so that the pedestal, with rotation of the LEVEL control, has equal range above and below the indicated 10 IRE level.

b. Noise Insertion Start. Rotate the DELAY control fully-counterclockwise, and set the NOISE MEASUREMENT MODE switch to FULL FIELD. View the display at a line rate (≈10 μs/div).

Adjust—R2071 (Noise Start) so that the inserted noise pedestal starts approximately 9 μs after the leading edge of sync.

c. Noise Insertion Stop. Rotate the DELAY control to midrange.

Adjust—R2161 (Noise Stop) so that the pedestal ends 26 μs from start.

d. DELAY Range. Rotate the DELAY control fully clockwise and fully counterclockwise.

Check—Range of control should cover the entire 10 to 64 μs active portion of the line. If it does not, the Noise Insertion Start timing cap, C2063, may be selected (1800 pF nominal ±600 pF) to achieve this coverage. If C2063 is selected, parts b and c of this step must be repeated.

e. LEVEL/IRE Range. Rotate the LEVEL control from fully counterclockwise to fully clockwise at each setting of the IRE switch.

Check—Should provide continuous overlapping of the noise pedestal between any adjacent settings of the IRE switch.

f. FIELD and LINE Range. Set the 1430 NOISE MEASUREMENT MODE switch to VITS. Set the test oscilloscope to view the vertical interval of the display.

Check—The inserted noise pedestal is on that line and field selected by the FIELD and LINE switches.

g. FULL FIELD. Set the 1430 NOISE MEASUREMENT MODE switch to FULL FIELD.

Check—The inserted noise pedestal should be on all active lines of each field.

6. H Sync Amplitude

a. Amplitude. Disconnect the cable on the 1430 PROGRAM IN connector. Set the NOISE MEASUREMENT MODE switch to H SYNC ADDED.

Adjust—R2423 (Sync Ampl) for: 525 Line Systems, −286 mV as measured between the blanking level and sync tip level; 625 Line Systems, 300 mV as measured between the blanking level and sync tip level.

b. Indicator.

Check—1430 front-panel NO INCOMING VIDEO lamp should be lit.

7. Noise

a. Amplitude. Connect the 1430 MONITOR OUT via a 75 Ω coaxial cable and 75 Ω feed-through termination to the RMS Voltmeter. Change the connector on P2370 from

the INS position to the CW position. Set the NOISE LEVEL dB switches to −20, 0, and 0. Set the NOISE MEASUREMENT MODE switch to VITS.

Adjust—R4615 (Noise Ampl) for 70 mV RMS.

NOTE

700 mV RMS equals 0 dB.

b. Attenuator Accuracy. Observing the RMS Voltmeter, rotate (or switch) the NOISE LEVEL dB switches through −59.5 dB.

Check—Should be within 1 dB of indicated attenuation.

c. Noise Bandwidth. Disconnect the RMS Voltmeter and connect the 75 Ω termination to a Spectrum Analyzer.

Adjust—R4717 (Noise Bandwidth) so that the Flat Energy/Unit Bandwidth is flat within 6 dB from 15 kHz to 5 MHz.

d. Interaction. Repeat part a before proceeding.

e. Disconnect all test equipment. Change the connector on P2370 from the CW position to the INS position.

8. Diff Phase & Diff Gain

a. Setup. Connect an external 5-Step Staircase (or 10-step) composite video signal to the 1430 PROGRAM IN connector via a 75 Ω coaxial cable. From the PROGRAM OUT connector, connect a 75 Ω coaxial cable to the Vectorscope A Input; terminate the Vectorscope A Input loop-thru with the 75 Ω end-line termination.

b. Program Diff Phase. Set the Vectorscope to measure differential phase.

Adjust—R3103 (Diff Phase) for best differential phase; it should be 0.15° or less.

c. Monitor Diff Phase. Change the cable on the 1430 PROGRAM OUT to the MONITOR OUT connector.

Check—Diff Phase should be 0.4° or less.

d. Monitor Diff Gain. Set the Vectorscope to measure differential gain.

Check—Diff gain should be 0.5% or less.

e. Program Diff Gain. Change the cable on the MONITOR OUT to the PROGRAM OUT connector.

Check—Diff gain should be 0.2% or less.

f. Disconnect all test equipment.

9. Return Loss

a. Setup. Connect the 015-0149-00 Return Loss Bridge to the test oscilloscope differential inputs. Set the test oscilloscope for a free-running display rate. (Use AC coupling.) Connect the Constant Amplitude Signal Generator via a 50 Ω coaxial cable and 50 Ω to 75 Ω Minimum Loss Attenuator to the Input of the Return Loss Bridge. Remove one of the matched 75 Ω feedthrough terminations and set the Constant Amplitude Signal Generator for 250 mV of 50 kHz signal.

b. Program Return Loss. Connect the unterminated coaxial cable from the Return Loss Bridge to the 1430 PROGRAM IN connector; connect the 75 Ω termination just removed to the PROGRAM OUT connector.

Check—Return loss should be at least 46 dB (1.25 mV or less) to 5 MHz.

Check—Return loss should be at least 40 dB (2.5 mV or less) to 5 MHz with the 1430 POWER switch set to OFF; return the POWER switch to ON.

c. Monitor Return Loss. Change the cable on the PROGRAM IN to the MONITOR OUT connector.

Check—Return loss should be at least 30 dB (7.9 mV or less) to 5 MHz.

d. Disconnect all test equipment.

10. Waveform Tilt

a. Setup. Connect an external Sin^2 Pulse & Bar composite video signal via a 75 Ω coaxial cable and a BNC-T Adapter to the 1430 PROGRAM IN connector. Connect a second 75 Ω coaxial cable from the BNC-T Adapter to either differential input on the test oscilloscope. (DO NOT TERMINATE.) From the PROGRAM OUT connector, connect a 75 Ω coaxial cable and a 75 Ω feedthrough termination to the other differential input on the test oscilloscope.

b. Program Tilt. View the test oscilloscope differential display at a line rate (≈10 μs/div).

Check—Waveform tilt of the 25 μs bar should be 3.6 mV or less (0.5%). Set the external video source to provide a Field Square Wave composite video signal. Set the test oscilloscope to view the display at a field rate (≈5 ms/div).

Check—Waveform tilt of the Field Square Wave should be 3.6 mV or less (0.5%).

c. Monitor Tilt. Change the cable on the PROGRAM OUT to the MONITOR OUT connector.

Check—Waveform tilt of the Field Square Wave should be 5.4 mV or less (0.75%).

Set the external video source to provide a Sin^2 Pulse & Bar composite video signal. Set the test oscilloscope to view the display at a line rate (≈10 μs).

Check—Waveform tilt of the 25 μs bar should be 5.4 mV or less (0.75%).

d. Disconnect all test equipment.

11. GAIN Range

a. Setup. Connect an external composite video signal (any signal) via a 75 Ω coaxial cable to the 1430 PROGRAM IN connector. From the MONITOR OUT connector, connect a 75 Ω coaxial cable and a 75 Ω feed-through termination to the test oscilloscope.

b. Range. Observing the test oscilloscope display at a line rate (≈10 μs/div), rotate the GAIN control from just out of the CAL (detent) position to fully counterclockwise.

Check—Range of control should be + and −3 dB from the CAL position. (If using a 1-volt peak-to-peak composite video drive signal, the range should be from at least 707.9 mV to 1.413 V.)

c. Disconnect all test equipment.

12. Signal Attenuation

a. Setup. Connect an external 1-volt peak-to-peak composite video signal, which contains a Sin^2 Pulse & Bar VITS on line 21 of both fields, via a 75 Ω coaxial cable to the 1430 PROGRAM IN connector. From the PROGRAM OUT connector, connect in listed order: a 75 Ω coaxial cable, 015-0213-00 Low-Pass Filter, and a 75 Ω feed-through termination to the test oscilloscope.

b. 2T Pulse Attenuation. Set the test oscilloscope to view line 21.

Check—2T pulse should have been attenuated by at least 75 dB (0.22 mV or less).

c. Subcarrier Attenuation. Set the external video source to provide a color bar VITS on line 21 of each field.

Check—Subcarrier (color bars) should have been attenuated by at least 60 dB (0.7 mV or less).

d. Spurious Signals. Set the test oscilloscope to view all lines in the vertical interval.

Check—There should be no signal (other than programmed VITS) greater than 40 dB (7 mV or less) during the vertical interval.

e. Disconnect all test equipment.

13. Hum, Transients, & Noise

a. Setup. Connect a 75 Ω termination to the 1430 PROGRAM IN connector. From the PROGRAM OUT connector, connect in listed order, a 75 Ω coaxial cable, 015-0215-00 Weighting Network, 015-0213-00 Low Pass Filter, and a 75 Ω feed-through termination to the test oscilloscope.

b. Hum & Transients. Set the test oscilloscope to view the display at power line rate.

Check—Hum and power line transients should be at least 60 dB down (0.7 mV or less).

c. Random Noise. Disconnect the 75 Ω feed-through termination from the test oscilloscope and connect it to the RMS Voltmeter.

Check—Random noise output should be at least 75 dB (RMS) down (0.14 mV or less).

14. Weighting Filter

NOTE

The weighting filter has been calibrated at the factory as per the limits given in the Specification portion of this manual. We recommend that the step not be performed. The filter can be checked or adjusted as follows.

a. Setup. Connect an external Multiburst composite video signal via a 75 Ω coaxial cable to the 1430 PROGRAM IN connector. Connect the MONITOR OUT to the test oscilloscope via a 75 Ω coaxial cable and 75 Ω feed-through termination. Set the NOISE MEASUREMENT MODE switch to OFF, and the NOISE WEIGHTING switch to OUT. Observing the test oscilloscope display, set the test oscilloscope so that each burst packet of the Multiburst signal is 6 divisions peak-to-peak.

NOTE

Six (6) divisions will be used as a reference.

b. Reponse. Set the 1430 NOISE WEIGHTING switch to IN.

Adjust L5577 for a peak-to-peak amplitude of 4.43 divisions of the 500 kHz burst packet.

Check

1.5 Mhz burst packet for 2.25 divisions within 5%.
2.5 MHz burst packet for 1.64 divisions within 5%.
4.0 MHz burst packet for 1.34 divisions within 5%.

c. Disconnect all test equipment.

15. Low Pass Filter

NOTE

The low-pass filter has been calibrated at the factory as per the limits given in the Specification portion of the manual. We recommend that the step not be performed. The filter can be checked or calibrated as follows.

a. Setup. Set the 1430 NOISE MEASUREMENT MODE switch to H SYNC ADDED, WEIGHTING FILTER switch to OUT, and the GAIN switch to CAL (detent position). Remove the connector on P2370 and remove Q2427. From the Constant Amplitude Signal Generator, connect a GR to BNC Female Adapter followed by a BNC-T Adapter. From one side of the BNC-T, connect a 50 Ω coaxial cable to the Digital Counter. From the unused side of the BNC-T, connect a 50 Ω coaxial cable and a 50 Ω to 75 Ω Minimum Loss Attenuator to the 1430 PROGRAM IN connector. From the MONITOR OUT connector, connect a 75 Ω coaxial cable and a 75 Ω feed-through termination to the test oscilloscope.

b. Response.

Adjust L5625 at 9.41 MHz for minimum amplitude.

Adjust L5653 at 5.51 MHz for minimum amplitude.

Adjust L5679 at 6.15 MHz for minimum amplitude.

Check—Observing the test oscilloscope display, set the Constant Amplitude Signal Generator for 5 divisions of 50 kHz. Use the following tables to check the low pass filter.

NOTE

Five (5) divisions will be used as the reference.

Set Frequency as indicated on Counter to:	Check for:	dB
Below 1 MHz	4.9 div within 5%	0.2
1 MHz to 3 MHz	4.8 div within 5%	0.37
3 MHz to 3.6 MHz	4.7 div within 5%	0.55

Frequency as Indicated on Counter:	Set Generator for:	dB
4.9 MHz ±2%	4.1 div	1.6
5.0 MHz ±2%	4.0 div	1.8
5.05 MHz ±2%	3.18 div	4.2
5.10 MHz ±2%	2.15 div	7.3
5.15 MHz ±2%	1.42 div	10.9
5.20 MHz ±2%	1.1 div	14.8
5.25 MHz ±2%	0.6 div	18.8

Frequency as indicated on Counter:	Set Generator for:	dB
5.30 MHz ±2%	0.4 div	23.0
5.35 MHz ±2%	0.2 div	27.7
5.40 MHz ±2%	0.1 div	33.3
5.45 MHz ±2%	0.04 div	41.0

c. Replace Q2427 and connect P2370.

REPLACEABLE ELECTRICAL PARTS

PARTS ORDERING INFORMATION

Replacement parts are available from or through your local Tektronix, Inc. Field Office or representative.

Changes to Tektronix instruments are sometimes made to accommodate improved components as they become available, and to give you the benefit of the latest circuit improvements developed in our engineering department. It is therefore important, when ordering parts, to include the following information in your order: Part number, instrument type or number, serial number, and modification number if applicable.

If a part you have ordered has been replaced with a new or improved part, your local Tektronix, Inc. Field Office or representative will contact you concerning any change in part number.

Change information, if any, is located at the rear of this manual.

ITEM NAME

In the Parts List, an Item Name is separated from the description by a colon (:). Because of space limitations, an Item Name may sometimes appear as incomplete. For further Item Name identification, the U.S. Federal Cataloging Handbook H6-1 can be utilized where possible.

ABBREVIATIONS

ACTR	ACTUATOR	PLSTC	PLASTIC
ASSY	ASSEMBLY	QTZ	QUARTZ
CAP	CAPACITOR	RECP	RECEPTACLE
CER	CERAMIC	RES	RESISTOR
CKT	CIRCUIT	RF	RADIO FREQUENCY
COMP	COMPOSITION	SEL	SELECTED
CONN	CONNECTOR	SEMICOND	SEMICONDUCTOR
ELCTLT	ELECTROLYTIC	SENS	SENSITIVE
ELEC	ELECTRICAL	VAR	VARIABLE
INCAND	INCANDESCENT	WW	WIREWOUND
LED	LIGHT EMITTING DIODE	XFMR	TRANSFORMER
NONWIR	NON WIREWOUND	XTAL	CRYSTAL

CROSS INDEX - MFR. CODE NUMBER TO MANUFACTURER

Mfr. Code	Manufacturer	Address	City, State, Zip Code
00213	NYTRONICS COMPONENTS GROUP INC SUBSIDIARY OF NYTRONICS INC	ORANGE ST	DARLINGTON SC 29532
00853	SANGAMO WESTON INC SANGAMO CAPACITOR DIV	SANGAMO RD P O BOX 128	PICKENS SC 29671
01121	ALLEN-BRADLEY CO	1201 SOUTH 2ND ST	MILWAUKEE WI 53204
01295	TEXAS INSTRUMENTS INC SEMICONDUCTOR GROUP	13500 N CENTRAL EXPRESSWAY P O BOX 225012 M/S 49	DALLAS TX 75265
01686	RCL ELECTRONICS INC	195 MCGREGOR ST	MANCHESTER NH 03102
02660	BUNKER RAMO CORP AMPHENOL NORTH AMERICA DIV	2801 S 25TH AVE	BROADVIEW IL 60153
02777	HOPKINS ENGINEERING CO	12900 FOOTHILL BLVD	SAN FERNANDO CA 91342
03508	GENERAL ELECTRIC CO SEMI-CONDUCTOR PRODUCTS DEPT	W GENESEE ST	AUBURN NY 13021
04099	CAPCO INC	FORESIGHT INDUSTRIAL PARK P O BOX 2164	GRAND JUNCTION CO 81501
04222	AVX CERAMICS DIV OF AVX CORP	19TH AVE SOUTH P O BOX 867	MYRTLE BEACH SC 29577
04713	MOTOROLA INC SEMICONDUCTOR GROUP	5005 E MCDOWELL RD	PHOENIX AZ 85008
05397	UNION CARBIDE CORP MATERIALS SYSTEMS DIV	11901 MADISON AVE	CLEVELAND OH 44101
05828	GENERAL INSTRUMENT CORP GOVERNMENT SYSTEMS DIV	600 W JOHN ST	HICKSVILLE NY 11802
07263	FAIRCHILD CAMERA AND INSTRUMENT CORP SEMICONDUCTOR DIV	464 ELLIS ST	MOUNTAIN VIEW CA 94042
07716	TRW INC TRW ELECTRONICS COMPONENTS TRW IRC FIXED RESISTORS/BURLINGTON	2850 MT PLEASANT AVE	BURLINGTON IA 52601
09353	C AND K COMPONENTS INC	15 RIVERDALE AVE	NEWTON MA 02158
12697	CLAROSTAT MFG CO INC	LOWER WASHINGTON ST	DOVER NH 03820
14099	SEMTECH CORP	652 MITCHELL ROAD	NEWBURY PARK CA 91320
18324	SIGNETICS CORP	811 E ARQUES	SUNNYVALE CA 94086
19396	ILLINOIS TOOL WORKS INC PAKTRON DIVISION	900 FOLLIN LANE S E	VIENNA VA 22180
19701	MEPCO/ELECTRA INC A NORTH AMERICAN PHILIPS CO	P O BOX 760	MINERAL WELLS TX 76067
24931	SPECIALTY CONNECTOR CO INC	2620 ENDRESS PLACE P O BOX D	GREENWOOD IN 46142
29587	BUNKER RAMO CORP AMPHENOL INDUSTRIAL DIV	1830 S 54TH AVE	CHICAGO IL 60650
31433	UNION CARBIDE CORP ELECTRONICS DIV	PO BOX 5928	GREENVILLE SC 29606
32159	WEST-CAP ARIZONA	2201 E ELVIRA ROAD	TUCSON AZ 85706
32997	BOURNS INC TRIMPOT DIV	1200 COLUMBIA AVE	RIVERSIDE CA 92507
49956	RAYTHEON CO EXECUTIVE OFFICES	141 SPRING ST	LEXINGTON MA 02173
52763	STETTNER ELECTRONICS INC	6135 AIRWAYS BLVD PO BOX 21947	CHATTANOOGA TN 37421
54583	TDK ELECTRONICS CORP	755 EASTGATE BLVD	GARDEN CITY NY 11530
56289	SPRAGUE ELECTRIC CO	87 MARSHALL ST	NORTH ADAMS MA 01247
57668	ROHM CORP	16931 MILLIKEN AVE	IRVINE CA 92713
58361	GENERAL INSTRUMENT CORP OPTOELECTRONICS DIV	3400 HILLVIEW AVE	PALO ALTO CA 94304
59660	TUSONIX INC	2155 N FORBES BLVD	TUCSON, ARIZONA 85705
59821	CENTRALAB INC SUB NORTH AMERICAN PHILIPS CORP	7158 MERCHANT AVE	EL PASO TX 79915
71400	MCGRAW-EDISON CO BUSSMANN MFG DIV	502 EARTH CITY PLAZA P O BOX 14460	ST LOUIS MO 63178
71590	GLOBE-UNION INC CENTRALAB ELECTRONICS DIV	HWY 20 W P O BOX 858	FORT DODGE IA 50501
71785	TRW INC TRW CINCH CONNECTORS	1501 WORSE AVE	ELK GROVE VILLAGE IL 60007
72982	ERIE TECHNOLOGICAL PRODUCTS INC	645 W 11TH ST	ERIE PA 16512
74970	JOHNSON E F CO	299 10TH AVE S W	WASECA MN 56093

CROSS INDEX - MFR. CODE NUMBER TO MANUFACTURER

Mfr. Code	Manufacturer	Address	City, State, Zip Code
75042	TRW INC TRW ELECTRONIC COMPONENTS IRC FIXED RESISTORS PHILADELPHIA DIV	401 N BROAD ST	PHILADELPHIA PA 19108
76493	BELL INDUSTRIES INC MILLER J W DIV	19070 REYES AVE P O BOX 5825	COMPTON CA 90224
76854	OAK SWITCH SYSTEMS INC SUB OF OAK TECHNOLOGY INC	100 S MAIN ST	CRYSTAL LAKE IL 60014
80009	TEKTRONIX INC	4900 S W GRIFFITH DR P O BOX 500	BEAVERTON OR 97077
90201	MALLORY CAPACITOR CO DIV P R MALLORY AND CO INC	4760 KENTUCKY AVE P O BOX 372	INDIANAPOLIS IN 46206
91637	DALE ELECTRONICS INC	P O BOX 609	COLUMBUS NE 68601
TK0213	TOPTRON CORP	TOKYO	JAPAN

Component No.	Tektronix Part No.	Serial/Assembly No. Effective	Dscont	Name & Description	Mfr. Code	Mfr. Part No.
A1	670-2292-00	B010100	B019999	CIRCUIT BD ASSY:TIMING	80009	670-2292-00
A1	670-2292-02	B020000		CIRCUIT BD ASSY:TIMING	80009	670-2292-02
A2	670-2290-00	B010100	B049999	CIRCUIT BD ASSY:AMPLIFIER	80009	670-2290-00
A2	670-2290-01	B050000	B059999	CIRCUIT BD ASSY:AMPLIFIER	80009	670-2290-01
A2	670-2290-02	B060000		CIRCUIT BD ASSY:AMPLIFIER	80009	670-2290-02
A3	670-2291-00	B010100	B101002	CIRCUIT BD ASSY:PROGRAM	80009	670-2291-00
A3	670-2291-01	B101003		CIRCUIT BD ASSY:PROGRAM	80009	670-2291-01
A4	670-2288-00			CIRCUIT BD ASSY:NOISE GENERATOR	80009	670-2288-00
A5	670-2289-00	B010100	B089999	CIRCUIT BD ASSY:LP FILTER (STANDARD ONLY)	80009	670-2289-00
A5	670-2289-01	B090000		CIRCUIT BD ASSY:LP FILTER (STANDARD ONLY)	80009	670-2289-01
A5	670-2289-01			CIRCUIT BD ASSY:LP FILTER (OPTION 1 ONLY)	80009	670-2289-01
A6	670-2425-00	B010100	B089999	CIRCUIT BD ASSY:NOISE WEIGHING NETWORK (STANDARD ONLY)	80009	670-2425-00
A6	670-2425-02	B090000		CIRCUIT BD ASSY:NOISE WEIGHING NETWORK (STANDARD ONLY)	80009	670-2425-02
A6	670-2425-01	B010100	B089999	CIRCUIT BD ASSY:NOISE WEIGHING NETWORK (OPTION 1 ONLY)	80009	670-2425-01
A6	670-2425-02	B090000		CIRCUIT BD ASSY:NOISE WEIGHING NETWORK (OPTION 1 ONLY)	80009	670-2425-02
A6	670-2425-02			CIRCUIT BD ASSY:NOISE WEIGHING NETWORK (OPTION 2 ONLY)	80009	670-2425-02
A7	670-1473-03			CIRCUIT BD ASSY:POWER SUPPLY	80009	670-1473-03
A8	670-2146-00			CIRCUIT BD ASSY:RELAY	80009	670-2146-00
A1	670-2292-00	B010100	B019999	CIRCUIT BD ASSY:TIMING	80009	670-2292-00
A1	670-2292-02	B020000		CIRCUIT BD ASSY:TIMING	80009	670-2292-02
A2	670-2290-00	B010100	B049999	CIRCUIT BD ASSY:AMPLIFIER	80009	670-2290-00
A2	670-2290-01	B050000	B059999	CIRCUIT BD ASSY:AMPLIFIER	80009	670-2290-01
A2	670-2290-02	B060000		CIRCUIT BD ASSY:AMPLIFIER	80009	670-2290-02
A3	670-2291-00	B010100	B101002	CIRCUIT BD ASSY:PROGRAM	80009	670-2291-00
A3	670-2291-01	B101003		CIRCUIT BD ASSY:PROGRAM	80009	670-2291-01
A4	670-2288-00			CIRCUIT BD ASSY:NOISE GENERATOR	80009	670-2288-00
A5	670-2289-00	B010100	B089999	CIRCUIT BD ASSY:LP FILTER (STANDARD ONLY)	80009	670-2289-00
A5	670-2289-01	B090000		CIRCUIT BD ASSY:LP FILTER (STANDARD ONLY)	80009	670-2289-01
A5	670-2289-01			CIRCUIT BD ASSY:LP FILTER (OPTION 1 ONLY)	80009	670-2289-01
A6	670-2425-00	B010100	B089999	CIRCUIT BD ASSY:NOISE WEIGHING NETWORK (STANDARD ONLY)	80009	670-2425-00
A6	670-2425-02	B090000		CIRCUIT BD ASSY:NOISE WEIGHING NETWORK (STANDARD ONLY)	80009	670-2425-02
A6	670-2425-01	B010100	B089999	CIRCUIT BD ASSY:NOISE WEIGHING NETWORK (OPTION 1 ONLY)	80009	670-2425-01
A6	670-2425-02	B090000		CIRCUIT BD ASSY:NOISE WEIGHING NETWORK (OPTION 1 ONLY)	80009	670-2425-02
A6	670-2425-02			CIRCUIT BD ASSY:NOISE WEIGHING NETWORK (OPTION 2 ONLY)	80009	670-2425-02
A7	670-1473-03			CIRCUIT BD ASSY:POWER SUPPLY	80009	670-1473-03
A8	670-2146-00			CIRCUIT BD ASSY:RELAY	80009	670-2146-00
C1015	283-0000-00			CAP,FXD,CER DI:0.001UF,+100-0%,500V	59660	831-610-Y5U0102P
C1031	283-0177-00			CAP,FXD,CER DI:1UF,+80-20%,25V	04222	SR302E105ZAATR
C1045	283-0177-00			CAP,FXD,CER DI:1UF,+80-20%,25V	04222	SR302E105ZAATR
C1061	283-0177-00			CAP,FXD,CER DI:1UF,+80-20%,25V	04222	SR302E105ZAATR
C1105	281-0131-00			CAP,VAR,AIR DI:2.4-24.5PF,250V	74970	189-0509-075
C1107	283-0058-00			CAP,FXD,CER DI:0.027UF,10%,100V	04222	SR301C273KAA
C1131	283-0003-00			CAP,FXD,CER DI:0.01UF,+80-20%,150V	59821	D103Z40Z5UJDCEX

Component No.	Tektronix Part No.	Serial/Assembly No. Effective	Dscont	Name & Description	Mfr. Code	Mfr. Part No.
C1171	283-0594-00			CAP,FXD,MICA DI:0.001UF,1%,100V	00853	D151F102FD
C1185	283-0622-00			CAP,FXD,MICA DI:450PF,1%,300V	00853	D155F451FD
C1189	283-0004-00			CAP,FXD,CER DI:0.02UF,+80-20%,150V	59660	855-558Z5V0203Z
C1191	283-0622-00			CAP,FXD,MICA DI:450PF,1%,300V	00853	D155F451FD
C1207	283-0000-00			CAP,FXD,CER DI:0.001UF,+100-0%,500V	59660	831-610-Y5U0102P
C1221	285-0835-00			CAP,FXD,PLASTIC:0.22UF,2%,100V	04099	TEK15-7
C1243	283-0077-00			CAP,FXD,CER DI:330PF,5%,500V	59660	831-500B331J
C1251	283-0615-00			CAP,FXD,MICA DI:33PF,5%,500V	00853	D155E330JO
C1319	283-0003-00			CAP,FXD,CER DI:0.01UF,+80-20%,150V	59821	D103Z40Z5UJDCEX
C1361	283-0593-00			CAP,FXD,MICA DI:0.01UF,1%,100V	00853	D301F103FD
C1363	283-0593-00			CAP,FXD,MICA DI:0.01UF,1%,100V	00853	D301F103FD
C1365	283-0178-00			CAP,FXD,CER DI:0.1UF,+80-20%,100V	05397	C330C104Z1U1CA
C1401	283-0593-00			CAP,FXD,MICA DI:0.01UF,1%,100V	00853	D301F103FD
C1461	285-0626-00			CAP,FXD,PLASTIC:0.0015UF,10%,100V	56289	192P15292R458
C1471	283-0594-00			CAP,FXD,MICA DI:0.001UF,1%,100V	00853	D151F102FD
C1483	281-0721-00			CAP,FXD,CER DI:72PF,5%,500V	52763	2RDPLZ007 72P0JU
C1593	283-0178-00	B010100	B080269	CAP,FXD,CER DI:0.1UF,+80-20%,100V	05397	C330C104Z1U1CA
C1601	283-0032-00			CAP,FXD,CER DI:470PF,5%,500V	59660	831-000-Z5E0471J
C1621	283-0032-00			CAP,FXD,CER DI:470PF,5%,500V	59660	831-000-Z5E0471J
C1681	283-0003-00			CAP,FXD,CER DI:0.01UF,+80-20%,150V	59821	D103Z40Z5UJDCEX
C1745	290-0512-00			CAP,FXD,ELCTLT:22UF,20%,15V	05397	T368B226M015AS
C1769	283-0239-00			CAP,FXD,CER DI:0.022UF,10%,50V	04222	3439-050C-223K
C1863	283-0239-00			CAP,FXD,CER DI:0.022UF,10%,50V	04222	3439-050C-223K
C1961	283-0004-00			CAP,FXD,CER DI:0.02UF,+80-20%,150V	59660	855-558Z5V0203Z
C1965	290-0529-00			CAP,FXD,ELCTLT:47UF,20%,20V	05397	T362C476M020AS
C1985	283-0638-00			CAP,FXD,MICA DI:130PF,1%,100V	00853	D155F131FD
C1989	283-0177-00			CAP,FXD,CER DI:1UF,+80-20%,25V	04222	SR302E105ZAATR
C2061	290-0517-00			CAP,FXD,ELCTLT:6.8UF,20%,35V	05397	T368B685M035AZ
C2063	283-0626-00	B010100	B010899	CAP,FXD,MICA DI:1800PF,5%,500V (NOMINAL VALUE SELECTED)	00853	D195F182JO
C2151	283-0664-00			CAP,FXD,MICA DI:2800PF,5%,500V	00853	D195F282JO
C2181	281-0525-00			CAP,FXD,CER DI:470PF,+/-94PF,500V	52763	2RDPLZ007 470PM0
C2383	283-0604-00			CAP,FXD,MICA DI:304PF,2%,500V	00853	D155F304GO
C2471	283-0618-00			CAP,FXD,MICA DI:130PF,2%,400V	00853	D155F131GO
C2491	283-0642-00			CAP,FXD,MICA DI:33PF,+/-0.5PF,300V	00853	D105E330GO
C2525	283-0111-00			CAP,FXD,CER DI:0.1UF,20%,50V	05397	C330C104M5U1CA
C2531	281-0536-00			CAP,FXD,CER DI:1000PF,10%,500V	52763	2RDPLZ007 1N00M0
C2541	283-0023-00			CAP,FXD,CER DI:0.1UF,+80-20%,12V	71590	2DDU66B104Z
C2543	283-0023-00			CAP,FXD,CER DI:0.1UF,+80-20%,12V	71590	2DDU66B104Z
C2565	283-0177-00			CAP,FXD,CER DI:1UF,+80-20%,25V	04222	SR302E105ZAATR
C2567	290-0517-00			CAP,FXD,ELCTLT:6.8UF,20%,35V	05397	T368B685M035AZ
C2571	283-0177-00			CAP,FXD,CER DI:1UF,+80-20%,25V	04222	SR302E105ZAATR
C2583	283-0648-00			CAP,FXD,MICA DI:10PF,5%,500V	00853	D155C100DO
C3001	290-0517-00			CAP,FXD,ELCTLT:6.8UF,20%,35V	05397	T368B685M035AZ
C3003	285-0835-00			CAP,FXD,PLASTIC:0.22UF,2%,100V	04099	TEK15-7
C3004	290-0517-00			CAP,FXD,ELCTLT:6.8UF,20%,35V	05397	T368B685M035AZ
C3005	285-0622-00			CAP,FXD,PLASTIC:0.1UF,20%,100V	19396	104M01DU591
C3029	281-0501-00			CAP,FXD,CER DI:4.7PF,+/-1PF,500V	59660	301-000S2H0479F
C3045	283-0059-00			CAP,FXD,CER DI:1UF,+80-20%,50V	31433	C330C105M5R5CA
C3081	290-0367-00			CAP,FXD,ELCTLT:70UF,20%,6V NONPOLARIZED	56289	30D1802
C3089	281-0578-00	B010100	B070219	CAP,FXD,CER DI:18PF,5%,500V	52763	2RDPLZ007 18P0JC
C3089	281-0577-00	B070220		CAP,FXD,CER DI:14PF,5%,500V	52763	2RDPLZ007 14P0JC
C3109	283-0000-00			CAP,FXD,CER DI:0.001UF,+100-0%,500V	59660	831-610-Y5U0102P
C3133	290-0534-00	B020000		CAP,FXD,ELCTLT:1UF,20%,35V	05397	T368A105M035AZ
C3134	290-0534-00	B020000		CAP,FXD,ELCTLT:1UF,20%,35V	05397	T368A105M035AZ
C3136	283-0001-00	B010100	B019999	CAP,FXD,CER DI:0.005UF,+100-0%,500V	59821	2DDH61L502P
C3136	281-0591-00	B020000	B080547	CAP,FXD,CER DI:5600PF,+80-20%,200V	72982	393 001 Z5V0562Z
C3136	283-0180-00	B080548		CAP,FXD,CER DI:5600PF,20%,200V	04222	3429 200E 562M
C3143	283-0178-00	B010100	B019999	CAP,FXD,CER DI:0.1UF,+80-20%,100V	05397	C330C104Z1U1CA

Component No.	Tektronix Part No.	Serial/Assembly No. Effective	Dscont	Name & Description	Mfr. Code	Mfr. Part No.
C3143	290-0534-00	B020000		CAP,FXD,ELCTLT:1UF,20%,35V	05397	T368A105M035AZ
C3149	283-0001-00	B010100	B019999	CAP,FXD,CER DI:0.005UF,+100-0%,500V	59821	2DDH61L502P
C3149	281-0591-00	B020000	B080547	CAP,FXD,CER DI:5600PF,+80-20%,200V	72982	393 001 Z5V0562Z
C3149	283-0180-00	B080548		CAP,FXD,CER DI:5600PF,20%,200V	04222	3429 200E 562M
C3155	283-0059-00			CAP,FXD,CER DI:1UF,+80-20%,50V	31433	C330C105M5R5CA
C3171	283-0060-00			CAP,FXD,CER DI:100PF,5%,200V	59660	855-535U2J101J
C3183	283-0178-00	B010100	B059999	CAP,FXD,CER DI:0.1UF,+80-20%,100V	05397	C330C104Z1U1CA
C3189	283-0054-00			CAP,FXD,CER DI:150PF,5%,200V	59660	855-535 U2J0151J
C3191	283-0054-00			CAP,FXD,CER DI:150PF,5%,200V	59660	855-535 U2J0151J
C3193	290-0517-00	B010100	B019999	CAP,FXD,ELCTLT:6.8UF,20%,35V	05397	T368B685M035AZ
C3193	290-0527-00	B020000		CAP,FXD,ELCTLT:15UF,20%,20V	05397	T368B156M020AS
C3213	283-0059-00			CAP,FXD,CER DI:1UF,+80-20%,50V	31433	C330C105M5R5CA
C3365	281-0166-00			CAP,VAR,AIR DI:1.9-15.7 PF,250V	74970	187-0109-055
C3409	283-0060-00			CAP,FXD,CER DI:100PF,5%,200V	59660	855-535U2J101J
C3413	290-0531-00			CAP,FXD,ELCTLT:100UF,20%,10V	05397	T368C107M010AS
C3415	283-0060-00			CAP,FXD,CER DI:100PF,5%,200V	59660	855-535U2J101J
C3447	283-0178-00			CAP,FXD,CER DI:0.1UF,+80-20%,100V	05397	C330C104Z1U1CA
C3451	281-0504-00			CAP,FXD,CER DI:10PF,+/-1PF,500V	54583	TCC20CH2H100FYA
C3475	283-0026-00			CAP,FXD,CER DI:0.2UF,+80-20%,25V	31433	C330C204M5R5CA
C3543	283-0111-00			CAP,FXD,CER DI:0.1UF,20%,50V	05397	C330C104M5U1CA
C3563	281-0166-00			CAP,VAR,AIR DI:1.9-15.7 PF,250V	74970	187-0109-055
C3602	281-0605-00	B010100	B079999	CAP,FXD,CER DI:200PF,10%,500V	59660	301000Y5D201K
C3602	281-0549-00	B080000		CAP,FXD,CER DI:68PF,10%,500V	52763	2RDPLZ007 68P0KU
C3605	283-0060-00			CAP,FXD,CER DI:100PF,5%,200V	59660	855-535U2J101J
C3611	283-0060-00			CAP,FXD,CER DI:100PF,5%,200V	59660	855-535U2J101J
C3617	290-0531-00			CAP,FXD,ELCTLT:100UF,20%,10V	05397	T368C107M010AS
C3619	283-0178-00			CAP,FXD,CER DI:0.1UF,+80-20%,100V	05397	C330C104Z1U1CA
C3649	290-0517-00			CAP,FXD,ELCTLT:6.8UF,20%,35V	05397	T368B685M035AZ
C3659	281-0626-00	B010100	B079999	CAP,FXD,CER DI:3.3PF,+/-0.1PF,500V	52763	2RDPLZ007 3P30BC
C3659	281-0526-00	B080000		CAP,FXD,CER DI:1.5PF,+/-0.5PF,500V (NOMINAL VALUE, SELECTED)	52763	2RDPLZ007 1P50DS
C3681	290-0517-00			CAP,FXD,ELCTLT:6.8UF,20%,35V	05397	T368B685M035AZ
C3687	290-0517-00			CAP,FXD,ELCTLT:6.8UF,20%,35V	05397	T368B685M035AZ
C3689	283-0000-00			CAP,FXD,CER DI:0.001UF,+100-0%,500V	59660	831-610-Y5U0102P
C4323	290-0512-00			CAP,FXD,ELCTLT:22UF,20%,15V	05397	T368B226M015AS
C4423	283-0625-00	B080000		CAP,FXD,MICA DI:220PF,1%,500V (NOMINAL VALUE, SELECTED)	00853	D105F221F0
C4425	290-0519-00			CAP,FXD,ELCTLT:100UF,20%,20V	90201	TDC107M020MLD
C4433	283-0059-00			CAP,FXD,CER DI:1UF,+80-20%,50V	31433	C330C105M5R5CA
C4531	290-0519-00			CAP,FXD,ELCTLT:100UF,20%,20V	90201	TDC107M020MLD
C4590	281-0504-00			CAP,FXD,CER DI:10PF,+/-1PF,500V	54583	TCC20CH2H100FYA
C4613	283-0003-00			CAP,FXD,CER DI:0.01UF,+80-20%,150V	59821	D103Z40Z5UJDCEX
C4629	290-0512-00			CAP,FXD,ELCTLT:22UF,20%,15V	05397	T368B226M015AS
C4633	283-0618-00	B080000		CAP,FXD,MICA DI:130PF,2%,400V (NOMINAL VALUE, SELECTED)	00853	D155F131G0
C4635	283-0003-00			CAP,FXD,CER DI:0.01UF,+80-20%,150V	59821	D103Z40Z5UJDCEX
C4715	283-0003-00			CAP,FXD,CER DI:0.01UF,+80-20%,150V	59821	D103Z40Z5UJDCEX
C4911	283-0059-00			CAP,FXD,CER DI:1UF,+80-20%,50V	31433	C330C105M5R5CA
C4913	283-0115-00			CAP,FXD,CER DI:47PF,5%,200V	59821	2DDT60K470J
C4915	290-0517-00			CAP,FXD,ELCTLT:6.8UF,20%,35V	05397	T368B685M035AZ
C4921	290-0519-00			CAP,FXD,ELCTLT:100UF,20%,20V	90201	TDC107M020MLD
C4941	290-0519-00			CAP,FXD,ELCTLT:100UF,20%,20V	90201	TDC107M020MLD
C4943	290-0517-00			CAP,FXD,ELCTLT:6.8UF,20%,35V	05397	T368B685M035AZ
C5531	283-0680-00	B010100	B089999	CAP,FXD,MICA DI:330PF,1%,500V (STANDARD ONLY)	00853	D155F331F0
C5531	283-0620-00	B090000		CAP,FXD,MICA DI:470PF,1%,300V (STANDARD ONLY)	00853	D155F471F0
C5531	283-0666-00	B010100	B089999	CAP,FXD,MICA DI:890PF,2%,100V (OPTION 1 ONLY)	00853	D151F891G0
C5531	283-0620-00	B090000		CAP,FXD,MICA DI:470PF,1%,300V	00853	D155F471F0

Component No.	Tektronix Part No.	Serial/Assembly No. Effective	Dscont	Name & Description	Mfr. Code	Mfr. Part No.
				(OPTION 1 ONLY)		
C5531	283-0620-00			CAP,FXD,MICA DI:470PF,1%,300V	00853	D155F471F0
				(OPTION 2 ONLY)		
C5571	283-0598-00	B010100	B089999	CAP,FXD,MICA DI:253PF,5%,300V	00853	D155F2530J0
				(STANDARD ONLY)		
C5571	283-0637-00	B090000		CAP,FXD,MICA DI:20PF,2.5%,500V	00853	D155E200D0
				(STANDARD ONLY)		
C5571	283-0637-00			CAP,FXD,MICA DI:20PF,2.5%,500V	00853	D155E200D0
				(OPTION 2 ONLY)		
C5601	283-0660-00	B010100	B089999	CAP,FXD,MICA DI:510PF,2%,500V	00853	D155F511G0
				(STANDARD ONLY)		
C5601	283-0651-00	B090000		CAP,FXD,MICA DI:430PF,1%,500V	00853	D155F431F0
				(STANDARD ONLY)		
C5601	283-0651-00			CAP,FXD,MICA DI:430PF,1%,500V	00853	D155F431F0
				(OPTION 1 ONLY)		
C5623	283-0692-00	B010100	B089999	CAP,FXD,MICA DI:670PF,1%,300V	00853	D153F671F0
				(STANDARD ONLY)		
C5623	283-0690-00	B090000		CAP,FXD,MICA DI:560PF,1%,300V	00853	D153F561F0
				(STANDARD ONLY)		
C5623	283-0690-00			CAP,FXD,MICA DI:560PF,1%,300V	00853	D153F561F0
				(OPTION 1 ONLY)		
C5631	283-0638-00	B010100	B089999	CAP,FXD,MICA DI:130PF,1%,100V	00853	D155F131F0
				(STANDARD ONLY)		
C5631	283-0631-00	B090000		CAP,FXD,MICA DI:95PF,1%,500V	00853	D155F950F0
				(STANDARD ONLY)		
C5631	283-0631-00			CAP,FXD,MICA DI:95PF,1%,500V	00853	D155F950F0
				(OPTION 1 ONLY)		
C5657	283-0691-00	B010100	B089999	CAP,FXD,MICA DI:650PF,1%,300V	00853	D153F651F0
				(STANDARD ONLY)		
C5657	283-0697-00	B090000		CAP,FXD,MICA DI:545PF,1%,300V	00853	D153F5450F0
				(STANDARD ONLY)		
C5657	283-0697-00			CAP,FXD,MICA DI:545PF,1%,300V	00853	D153F5450F0
				(OPTION 1 ONLY)		
C5671	283-0689-00	B010100	B089999	CAP,FXD,MICA DI:550PF,1%,300V	00853	D153F551F0
				(STANDARD ONLY)		
C5671	283-0688-00	B090000		CAP,FXD,MICA DI:464PF,1%,300V	00853	D155F4640F0
				(STANDARD ONLY)		
C5671	283-0688-00			CAP,FXD,MICA DI:464PF,1%,300V	00853	D155F4640F0
				(OPTION 1 ONLY)		
C5673	283-0688-00	B010100	B089999	CAP,FXD,MICA DI:464PF,1%,300V	00853	D155F4640F0
				(STANDARD ONLY)		
C5673	283-0698-00	B090000		CAP,FXD,MICA DI:390PF,1%,500V	00853	D155F391F0
				(STANDARD ONLY)		
C5673	283-0698-00			CAP,FXD,MICA DI:390PF,1%,500V	00853	D155F391F0
				(OPTION 1 ONLY)		
C5679	283-0604-00	B010100	B089999	CAP,FXD,MICA DI:304PF,2%,500V	00853	D155F3040G0
				(STANDARD ONLY)		
C5679	283-0598-00	B090000		CAP,FXD,MICA DI:253PF,5%,300V	00853	D155F2530J0
				(STANDARD ONLY)		
C5679	283-0598-00			CAP,FXD,MICA DI:253PF,5%,300V	00853	D155F2530J0
				(OPTION 1 ONLY)		
C9010	283-0111-00			CAP,FXD,CER DI:0.1UF,20%,50V	05397	C330C104M5U1CA
C9011	290-0334-00			CAP,FXD,ELCTLT:1250UF,+75-10%,50V	56289	53D282
C9042	290-0443-00			CAP,FXD,ELCTLT:3000UF,+50-10%,20V	00853	057JL302T020B
C9061	290-0334-00			CAP,FXD,ELCTLT:1250UF,+75-10%,50V	56289	53D282
C9410	283-0177-00			CAP,FXD,CER DI:1UF,+80-20%,25V	04222	SR302E105ZAATR
C9515	281-0629-00	B080000		CAP,FXD,CER DI:33PF,5%,600V	52763	2RDPLZ007 33P0JC
				(NOMINAL VALUE, SELECTED)		
C9545	281-0572-00	B080000		CAP,FXD,CER DI:6.8PF,0.5%,500V	52763	2RDPLZ007 6P80DC
				(NOMINAL VALUE, SELECTED)		
C9575	281-0604-00	B080000		CAP,FXD,CER DI:2.2PF,+/-0.25PF,500V	52763	2RDPLZ007 2P20CC
				(NOMINAL VALUE, SELECTED)		
C9802	285-0598-00			CAP,FXD,PLASTIC:0.01UF,5%,100V	19396	DU490B103J

Component No.	Tektronix Part No.	Serial/Assembly No. Effective	Dscont	Name & Description	Mfr. Code	Mfr. Part No.
C9810	283-0026-00			CAP,FXD,CER DI:0.2UF,+80-20%,25V	31433	C330C204M5R5CA
C9824	290-0296-00			CAP,FXD,ELCTLT:100UF,20%,20V	05397	T110D107M020AS
C9830	285-0598-00			CAP,FXD,PLASTIC:0.01UF,5%,100V	19396	DU490B103J
C9831	283-0000-00			CAP,FXD,CER DI:0.001UF,+100-0%,500V	59660	831-610-Y5U0102P
C9832	290-0135-00			CAP,FXD,ELCTLT:15UF,20%,20V	05397	T110B156M020AS
C9840	283-0026-00			CAP,FXD,CER DI:0.2UF,+80-20%,25V	31433	C330C204M5R5CA
C9850	290-0135-00			CAP,FXD,ELCTLT:15UF,20%,20V	05397	T110B156M020AS
C9852	283-0026-00			CAP,FXD,CER DI:0.2UF,+80-20%,25V	31433	C330C204M5R5CA
C9854	283-0000-00			CAP,FXD,CER DI:0.001UF,+100-0%,500V	59660	831-610-Y5U0102P
C9856	285-0598-00			CAP,FXD,PLASTIC:0.01UF,5%,100V	19396	DU490B103J
CR1017	152-0141-02			SEMICOND DVC,DI:SW,SI,30V,150MA,30V,DO-35	03508	DA2527 (1N4152)
CR1181	152-0270-00			SEMICOND DVC,DI:VVC,SI,40V,62.6PF,DO-7	04713	SMV1563
CR1209	152-0141-02			SEMICOND DVC,DI:SW,SI,30V,150MA,30V,DO-35	03508	DA2527 (1N4152)
CR1311	152-0141-02			SEMICOND DVC,DI:SW,SI,30V,150MA,30V,DO-35	03508	DA2527 (1N4152)
CR1315	152-0141-02			SEMICOND DVC,DI:SW,SI,30V,150MA,30V,DO-35	03508	DA2527 (1N4152)
CR1345	152-0141-02			SEMICOND DVC,DI:SW,SI,30V,150MA,30V,DO-35	03508	DA2527 (1N4152)
CR1441	152-0141-02			SEMICOND DVC,DI:SW,SI,30V,150MA,30V,DO-35	03508	DA2527 (1N4152)
CR1451	152-0141-02			SEMICOND DVC,DI:SW,SI,30V,150MA,30V,DO-35	03508	DA2527 (1N4152)
CR1563	152-0141-02			SEMICOND DVC,DI:SW,SI,30V,150MA,30V,DO-35	03508	DA2527 (1N4152)
CR1565	152-0141-02	B010100	B080269	SEMICOND DVC,DI:SW,SI,30V,150MA,30V,DO-35	03508	DA2527 (1N4152)
CR1591	152-0141-02			SEMICOND DVC,DI:SW,SI,30V,150MA,30V,DO-35	03508	DA2527 (1N4152)
CR1781	152-0141-02			SEMICOND DVC,DI:SW,SI,30V,150MA,30V,DO-35	03508	DA2527 (1N4152)
CR1783	152-0141-02			SEMICOND DVC,DI:SW,SI,30V,150MA,30V,DO-35	03508	DA2527 (1N4152)
CR1785	152-0141-02			SEMICOND DVC,DI:SW,SI,30V,150MA,30V,DO-35	03508	DA2527 (1N4152)
CR2321	152-0141-02			SEMICOND DVC,DI:SW,SI,30V,150MA,30V,DO-35	03508	DA2527 (1N4152)
CR2331	152-0141-02			SEMICOND DVC,DI:SW,SI,30V,150MA,30V,DO-35	03508	DA2527 (1N4152)
CR2421	152-0141-02			SEMICOND DVC,DI:SW,SI,30V,150MA,30V,DO-35	03508	DA2527 (1N4152)
CR2429	152-0141-02			SEMICOND DVC,DI:SW,SI,30V,150MA,30V,DO-35	03508	DA2527 (1N4152)
CR2545	152-0141-02			SEMICOND DVC,DI:SW,SI,30V,150MA,30V,DO-35	03508	DA2527 (1N4152)
CR2547	152-0141-02			SEMICOND DVC,DI:SW,SI,30V,150MA,30V,DO-35	03508	DA2527 (1N4152)
CR3105	152-0269-00	B010100	B080478	SEMICOND DVC,DI:VVC,SI,35V,33PF,DO-7	04713	SMV1263
CR3105	152-0269-01	B080479		SEMICOND DVC,DI:VVC,SI,33PF,5%,35V,DO-7	04713	SMV1263-1
CR3167	152-0141-02			SEMICOND DVC,DI:SW,SI,30V,150MA,30V,DO-35	03508	DA2527 (1N4152)
CR3401	152-0141-02			SEMICOND DVC,DI:SW,SI,30V,150MA,30V,DO-35	03508	DA2527 (1N4152)
CR3481	152-0141-02			SEMICOND DVC,DI:SW,SI,30V,150MA,30V,DO-35	03508	DA2527 (1N4152)
CR3615	152-0141-02			SEMICOND DVC,DI:SW,SI,30V,150MA,30V,DO-35	03508	DA2527 (1N4152)
CR3683	152-0141-02			SEMICOND DVC,DI:SW,SI,30V,150MA,30V,DO-35	03508	DA2527 (1N4152)
CR4831	152-0141-02			SEMICOND DVC,DI:SW,SI,30V,150MA,30V,DO-35	03508	DA2527 (1N4152)
CR9802	152-0198-00			SEMICOND DVC,DI:RECT,SI,200V,3A,A249	03508	1N5624
CR9804	152-0198-00			SEMICOND DVC,DI:RECT,SI,200V,3A,A249	03508	1N5624
CR9830	152-0066-00	B010100	B080546	SEMICOND DVC,DI:RECT,SI,400V,1A,DO-41	05828	GP10G-020
CR9830	152-0066-01	B080547		SEMICOND DVC,DI:SELECTED	14099	SS6106
CR9832	152-0066-00	B010100	B080546	SEMICOND DVC,DI:RECT,SI,400V,1A,DO-41	05828	GP10G-020
CR9832	152-0066-01	B080547		SEMICOND DVC,DI:SELECTED	14099	SS6106
CR9834	152-0066-00	B010100	B080546	SEMICOND DVC,DI:RECT,SI,400V,1A,DO-41	05828	GP10G-020
CR9834	152-0066-01	B080547		SEMICOND DVC,DI:SELECTED	14099	SS6106
CR9836	152-0066-00	B010100	B080546	SEMICOND DVC,DI:RECT,SI,400V,1A,DO-41	05828	GP10G-020
CR9836	152-0066-01	B080547		SEMICOND DVC,DI:SELECTED	14099	SS6106
CR9870	152-0066-00	B010100	B080546	SEMICOND DVC,DI:RECT,SI,400V,1A,DO-41	05828	GP10G-020
CR9870	152-0066-01	B080547		SEMICOND DVC,DI:SELECTED	14099	SS6106
CR9872	152-0066-00	B010100	B080546	SEMICOND DVC,DI:RECT,SI,400V,1A,DO-41	05828	GP10G-020
CR9872	152-0066-01	B080547		SEMICOND DVC,DI:SELECTED	14099	SS6106
CR9874	152-0066-00	B010100	B080546	SEMICOND DVC,DI:RECT,SI,400V,1A,DO-41	05828	GP10G-020
CR9874	152-0066-01	B080547		SEMICOND DVC,DI:SELECTED	14099	SS6106
CR9876	152-0066-00	B010100	B080546	SEMICOND DVC,DI:RECT,SI,400V,1A,DO-41	05828	GP10G-020
CR9876	152-0066-01	B080547		SEMICOND DVC,DI:SELECTED	14099	SS6106
DS9201	150-0035-00			LAMP,GLOW:90V MAX,0.3MA,AID-T,WIRE LD	TK0213	JH005/3011JA
DS9320	150-1001-00			LT EMITTING DIO:RED,660NM,100MA MAX	58361	MV5024
F9201	159-0030-00	B010100	B039999	FUSE,CARTRIDGE:3AG,0.3A,250V,FAST BLOW	71400	AGC-CM-3/10

Component No.	Tektronix Part No.	Serial/Assembly No. Effective	Dscont	Name & Description	Mfr. Code	Mfr. Part No.
F9201	159-0025-00	B040000		FUSE,CARTRIDGE:3AG,0.5A,250V,0.25SEC	71400	AGC-CM-1/2
FL9201	119-0389-00			FILTER,RFI:3A,115/230VAC,60HZ	02777	F11935-3
J9010	131-0148-00			CONN,RCPT,ELEC:FEMALE,24 CONTACT	02660	26-190-24-1004
J9014	131-0324-00			CONN,RCPT,ELEC:24 CONTACT,FEMALE	29587	57-40240 (398)
J9923	131-0126-00			CONN,RCPT,ELEC:BNC,FEMALE	24931	28JR205-2
J9943	131-1097-00			CONN,RCPT,ELEC:BNC,FEMALE,CKT BOARD MT	24931	28JR220-2
J9983	131-1097-00			CONN,RCPT,ELEC:BNC,FEMALE,CKT BOARD MT	24931	28JR220-2
K4571	148-0034-00	B010100	B080449	RELAY,ARMATURE:DPDT,15VDC,600 OHM	80009	148-0034-00
K4571	148-0107-04	B080450		RELAY,ARMATURE:W/8 PIN HEADER	80009	148-0107-04
K9967	148-0034-00	B010100	B080449	RELAY,ARMATURE:DPDT,15VDC,600 OHM	80009	148-0034-00
K9967	148-0107-04	B080450		RELAY,ARMATURE:W/8 PIN HEADER	80009	148-0107-04
L1151	108-0174-00			COIL,RF:FIXED,275UH	80009	108-0174-00
L1287	108-0443-00			COIL,RF:FIXED,23.5UH	80009	108-0443-00
L1367	114-0308-00	B010100	B080570	COIL,RF:VARIABLE,2.9-6.5UH	80009	114-0308-00
L1367	114-0222-00	B080571		COIL,RF:VARIABLE,2-6UH	80009	114-0222-00
L1983	108-0317-00			COIL,RF:FIXED,15 UH	32159	71501M+10PERCENT
L2481	114-0310-00			COIL,RF:VARIABLE,22-80UH	80009	114-0310-00
L2581	114-0310-00			COIL,RF:VARIABLE,22-80UH	80009	114-0310-00
L3127	108-0226-00			COIL,RF:FIXED,100UH	76493	DWG B4257
L3233	108-0226-00			COIL,RF:FIXED,100UH	76493	DWG B4257
L5529	114-0219-00	B010100	B089999	COIL,RF:VARIABLE,45-130UH (STANDARD ONLY)	80009	114-0219-00
L5577	114-0310-00	B010100	B089999	COIL,RF:VARIABLE,22-80UH (STANDARD ONLY)	80009	114-0310-00
L5577	114-0311-00	B090000		COIL,RF:VARIABLE,65-190UH (STANDARD ONLY)	80009	114-0311-00
L5577	114-0311-00			COIL,RF:VARIABLE,65-190UH (OPTION 1 ONLY)	80009	114-0311-00
L5577	114-0311-00			COIL,RF:VARIABLE,65-190UH (OPTION 2 ONLY)	80009	114-0311-00
L5625	114-0312-00	B010100	B089999	COIL,RF:VARIABLE,3.25-3.59UH (STANDARD ONLY)	80009	114-0312-00
L5625	114-0315-00	B090000		COIL,RF:VARIABLE,2.73-3.0UH (STANDARD ONLY)	80009	114-0315-00
L5625	114-0315-00			COIL,RF:VARIABLE,2.73-3.0UH (OPTION 1 ONLY)	80009	114-0315-00
L5653	114-0313-00	B010100	B089999	COIL,RF:VARIABLE,1.73-1.91UH (STANDARD ONLY)	80009	114-0313-00
L5653	114-0316-00	B090000		COIL,RF:VARIABLE,1.46-1.6UH (STANDARD ONLY)	80009	114-0316-00
L5653	114-0316-00			COIL,RF:VARIABLE,1.46-1.6UH (OPTION 1 ONLY)	80009	114-0316-00
L5679	114-0314-00	B010100	B089999	COIL,RF:VARIABLE,1.94-2.14UH (STANDARD ONLY)	80009	114-0314-00
L5679	114-0317-00	B090000		COIL,RF:VARIABLE,1.64-1.8UH (STANDARD ONLY)	80009	114-0317-00
L5679	114-0317-00			COIL,RF:VARIABLE,1.64-1.8UH (OPTION 1 ONLY)	80009	114-0317-00
L9465	108-0249-00	B050000		CHOKE,RF:FIXED,12MF	76493	B-4992
P9010	131-0149-00			CONN,RCPT,ELEC:MALE,24 CONTACT	02660	26-159-24
P9014	131-0325-00			CONN,PLUG,ELEC:24 CONTACT,MALE	71785	57-30240(398)
Q1021	151-0190-00			TRANSISTOR:NPN,SI,TO-92	80009	151-0190-00
Q1023	151-0190-00			TRANSISTOR:NPN,SI,TO-92	80009	151-0190-00
Q1063	151-0190-00			TRANSISTOR:NPN,SI,TO-92	80009	151-0190-00
Q1065	151-0190-00			TRANSISTOR:NPN,SI,TO-92	80009	151-0190-00
Q1121	151-0190-00			TRANSISTOR:NPN,SI,TO-92	80009	151-0190-00
Q1163	151-0220-00			TRANSISTOR:PNP,SI,TO-92	80009	151-0220-00
Q1165	151-0190-00			TRANSISTOR:NPN,SI,TO-92	80009	151-0190-00
Q1223	151-0190-00			TRANSISTOR:NPN,SI,TO-92	80009	151-0190-00
Q1225	151-0190-00			TRANSISTOR:NPN,SI,TO-92	80009	151-0190-00
Q1255	151-0190-00			TRANSISTOR:NPN,SI,TO-92	80009	151-0190-00

Component No.	Tektronix Part No.	Serial/Assembly No. Effective	Dscont	Name & Description	Mfr. Code	Mfr. Part No.
Q1353	151-0190-00			TRANSISTOR:NPN,SI,TO-92	80009	151-0190-00
Q1363	151-0188-00			TRANSISTOR:PNP,SI,TO-92	80009	151-0188-00
Q1453	151-0190-00			TRANSISTOR:NPN,SI,TO-92	80009	151-0190-00
Q1455	151-0190-00			TRANSISTOR:NPN,SI,TO-92	80009	151-0190-00
Q1463	151-0220-00			TRANSISTOR:PNP,SI,TO-92	80009	151-0220-00
Q1465	151-0220-00			TRANSISTOR:PNP,SI,TO-92	80009	151-0220-00
Q1653	151-0192-00			TRANSISTOR:SELECTED	04713	SPS8801
Q1655	151-0224-00			TRANSISTOR:NPN,SI,TO-92	04713	SPS6917
Q1663	151-0188-00			TRANSISTOR:PNP,SI,TO-92	80009	151-0188-00
Q1671	151-0188-00			TRANSISTOR:PNP,SI,TO-92	80009	151-0188-00
Q1685	151-0188-00			TRANSISTOR:PNP,SI,TO-92	80009	151-0188-00
Q1687	151-0223-00			TRANSISTOR:NPN,SI,TO-92	04713	SPS8026
Q1761	151-0216-00			TRANSISTOR:PNP,SI,TO-92	04713	SPS8803
Q1771	151-0192-00			TRANSISTOR:SELECTED	04713	SPS8801
Q1773	151-0223-00			TRANSISTOR:NPN,SI,TO-92	04713	SPS8026
Q1775	151-0190-00			TRANSISTOR:NPN,SI,TO-92	80009	151-0190-00
Q1789	151-0190-00			TRANSISTOR:NPN,SI,TO-92	80009	151-0190-00
Q1791	151-0190-00			TRANSISTOR:NPN,SI,TO-92	80009	151-0190-00
Q1871	151-0188-00			TRANSISTOR:PNP,SI,TO-92	80009	151-0188-00
Q1967	151-0190-00			TRANSISTOR:NPN,SI,TO-92	80009	151-0190-00
Q2073	151-0190-00			TRANSISTOR:NPN,SI,TO-92	80009	151-0190-00
Q2381	151-0188-00			TRANSISTOR:PNP,SI,TO-92	80009	151-0188-00
Q2427	151-0188-00			TRANSISTOR:PNP,SI,TO-92	80009	151-0188-00
Q2431	151-0164-00			TRANSISTOR:PNP,SI,TO-92	04713	2N2907A
Q2437	151-0192-00			TRANSISTOR:SELECTED	04713	SPS8801
Q2561	151-0164-00			TRANSISTOR:PNP,SI,TO-92	04713	2N2907A
Q3021	151-0216-00			TRANSISTOR:PNP,SI,TO-92	04713	SPS8803
Q3023	151-0190-00			TRANSISTOR:NPN,SI,TO-92	80009	151-0190-00
Q3041	151-0190-00			TRANSISTOR:NPN,SI,TO-92	80009	151-0190-00
Q3043	151-0188-00			TRANSISTOR:PNP,SI,TO-92	80009	151-0188-00
Q3055	151-0190-00			TRANSISTOR:NPN,SI,TO-92	80009	151-0190-00
Q3057	151-0190-00			TRANSISTOR:NPN,SI,TO-92	80009	151-0190-00
Q3111	151-0223-00			TRANSISTOR:NPN,SI,TO-92	04713	SPS8026
Q3133	151-0220-00			TRANSISTOR:PNP,SI,TO-92	80009	151-0220-00
Q3135	151-1039-00			TRANSISTOR:FET,P-CHAN,SI,TO-92	04713	SPFB77
Q3173	151-0220-00			TRANSISTOR:PNP,SI,TO-92	80009	151-0220-00
Q3175	151-0220-00			TRANSISTOR:PNP,SI,TO-92	80009	151-0220-00
Q3211	151-0361-00			TRANSISTOR:NPN,SI,R-138	56289	TD702
Q3229	151-1039-00			TRANSISTOR:FET,P-CHAN,SI,TO-92	04713	SPFB77
Q3265	151-0104-00			TRANSISTOR:NPN,SI,TO-77	49956	TA1075
Q3327	151-0190-00			TRANSISTOR:NPN,SI,TO-92	80009	151-0190-00
Q3351	151-0216-00			TRANSISTOR:PNP,SI,TO-92	04713	SPS8803
Q3361	151-0216-00			TRANSISTOR:PNP,SI,TO-92	04713	SPS8803
Q3387	151-0190-00			TRANSISTOR:NPN,SI,TO-92	80009	151-0190-00
Q3411	151-0301-00			TRANSISTOR:PNP,SI,TO-18	04713	ST898
Q3429	151-0190-00			TRANSISTOR:NPN,SI,TO-92	80009	151-0190-00
Q3431	151-0190-00			TRANSISTOR:NPN,SI,TO-92	80009	151-0190-00
Q3473	151-0216-00			TRANSISTOR:PNP,SI,TO-92	04713	SPS8803
Q3511	151-0190-00			TRANSISTOR:NPN,SI,TO-92	80009	151-0190-00
Q3581	151-0190-00			TRANSISTOR:NPN,SI,TO-92	80009	151-0190-00
Q3621	151-0301-00			TRANSISTOR:PNP,SI,TO-18	04713	ST898
Q3629	151-0190-00			TRANSISTOR:NPN,SI,TO-92	80009	151-0190-00
Q3631	151-0190-00			TRANSISTOR:NPN,SI,TO-92	80009	151-0190-00
Q3657	151-0216-00			TRANSISTOR:PNP,SI,TO-92	04713	SPS8803
Q3675	151-0216-00			TRANSISTOR:PNP,SI,TO-92	04713	SPS8803
Q3677	151-0216-00			TRANSISTOR:PNP,SI,TO-92	04713	SPS8803
Q4411	151-0223-00			TRANSISTOR:NPN,SI,TO-92	04713	SPS8026
Q4431	151-0223-00			TRANSISTOR:NPN,SI,TO-92	04713	SPS8026
Q4611	151-0223-00			TRANSISTOR:NPN,SI,TO-92	04713	SPS8026

Component No.	Tektronix Part No.	Serial/Assembly No. Effective	Dscont	Name & Description	Mfr. Code	Mfr. Part No.
Q4613	151-0223-00			TRANSISTOR:NPN,SI,TO-92	04713	SPS8026
Q4727	151-0190-00			TRANSISTOR:NPN,SI,TO-92	80009	151-0190-00
Q4737	151-0220-00			TRANSISTOR:PNP,SI,TO-92	80009	151-0220-00
Q9035	151-0323-00			TRANSISTOR:SELECTED	04713	SJE916
Q9055	151-0323-00			TRANSISTOR:SELECTED	04713	SJE916
Q9085	151-0323-00			TRANSISTOR:SELECTED	04713	SJE916
Q9800	151-0301-00			TRANSISTOR:PNP,SI,TO-18	04713	ST898
Q9802	151-0188-00			TRANSISTOR:PNP,SI,TO-92	80009	151-0188-00
Q9804	151-0190-00			TRANSISTOR:NPN,SI,TO-92	80009	151-0190-00
Q9806	151-0190-00			TRANSISTOR:NPN,SI,TO-92	80009	151-0190-00
Q9830	151-0301-00			TRANSISTOR:PNP,SI,TO-18	04713	ST898
Q9832	151-0188-00			TRANSISTOR:PNP,SI,TO-92	80009	151-0188-00
Q9834	151-0190-00			TRANSISTOR:NPN,SI,TO-92	80009	151-0190-00
Q9836	151-0190-00			TRANSISTOR:NPN,SI,TO-92	80009	151-0190-00
Q9850	151-0301-00			TRANSISTOR:PNP,SI,TO-18	04713	ST898
Q9852	151-0188-00			TRANSISTOR:PNP,SI,TO-92	80009	151-0188-00
Q9854	151-0190-00			TRANSISTOR:NPN,SI,TO-92	80009	151-0190-00
Q9856	151-0190-00			TRANSISTOR:NPN,SI,TO-92	80009	151-0190-00
R1001	311-1228-00			RES,VAR,NONWW:TRMR,10K OHM,0.5W	32997	3386F-T04-103
R1011	315-0102-00			RES,FXD,FILM:1K OHM,5%,0.25W	57668	NTR25JE01K0
R1013	315-0222-00			RES,FXD,FILM:2.2K OHM,5%,0.25W	57668	NTR25J-E02K2
R1041	315-0100-00			RES,FXD,FILM:10 OHM,5%,0.25W	19701	5043CX10RR00J
R1043	315-0100-00			RES,FXD,FILM:10 OHM,5%,0.25W	19701	5043CX10RR00J
R1071	315-0153-00			RES,FXD,FILM:15K OHM,5%,0.25W	19701	5043CX15K00J
R1081	321-0270-00			RES,FXD,FILM:6.34K OHM,1%,0.125W,TC=T0	19701	5043ED6K340F
R1083	321-0255-00			RES,FXD,FILM:4.42K OHM,1%,0.125W,TC=T0	19701	5033ED4K420F
R1085	315-0432-00			RES,FXD,FILM:4.3K OHM,5%,0.25W	57668	NTR25J-E04K3
R1101	315-0513-00			RES,FXD,FILM:51K OHM,5%,0.25W	57668	NTR25J-E51K0
R1103	321-0270-00			RES,FXD,FILM:6.34K OHM,1%,0.125W,TC=T0	19701	5043ED6K340F
R1105	321-0255-00			RES,FXD,FILM:4.42K OHM,1%,0.125W,TC=T0	19701	5033ED4K420F
R1107	315-0332-00			RES,FXD,FILM:3.3K OHM,5%,0.25W	57668	NTR25J-E03K3
R1141	315-0101-00			RES,FXD,FILM:100 OHM,5%,0.25W	57668	NTR25J-E 100E
R1143	315-0472-00			RES,FXD,FILM:4.7K OHM,5%,0.25W	57668	NTR25J-E04K7
R1145	315-0473-00			RES,FXD,FILM:47K OHM,5%,0.25W	57668	NTR25J-E47K0
R1181	315-0113-00			RES,FXD,FILM:11K OHM,5%,0.25W	19701	5043CX11K00J
R1183	315-0272-00			RES,FXD,FILM:2.7K OHM,5%,0.25W	57668	NTR25J-E02K7
R1187	315-0623-00			RES,FXD,FILM:62K OHM,5%,0.25W	19701	5043CX62K00J
R1193	315-0623-00			RES,FXD,FILM:62K OHM,5%,0.25W	19701	5043CX62K00J
R1201	315-0185-00			RES,FXD,FILM:1.8M OHM,5%,0.25W	01121	CB1855
R1203	315-0275-00			RES,FXD,FILM:2.7M OHM,5%,0.25W	01121	CB2755
R1205	315-0472-00			RES,FXD,FILM:4.7K OHM,5%,0.25W	57668	NTR25J-E04K7
R1211	315-0103-00			RES,FXD,FILM:10K OHM,5%,0.25W	19701	5043CX10K00J
R1241	315-0473-00			RES,FXD,FILM:47K OHM,5%,0.25W	57668	NTR25J-E47K0
R1245	315-0332-00			RES,FXD,FILM:3.3K OHM,5%,0.25W	57668	NTR25J-E03K3
R1247	315-0102-00			RES,FXD,FILM:1K OHM,5%,0.25W	57668	NTR25JE01K0
R1249	315-0122-00			RES,FXD,FILM:1.2K OHM,5%,0.25W	57668	NTR25J-E01K2
R1283	315-0474-00			RES,FXD,FILM:470K OHM,5%,0.25W	19701	5043CX470K0J92U
R1285	315-0475-00			RES,FXD,FILM:4.7M OHM,5%,0.25W	01121	CB4755
R1313	315-0472-00			RES,FXD,FILM:4.7K OHM,5%,0.25W	57668	NTR25J-E04K7
R1317	315-0103-00			RES,FXD,FILM:10K OHM,5%,0.25W	19701	5043CX10K00J
R1319	315-0102-00			RES,FXD,FILM:1K OHM,5%,0.25W	57668	NTR25JE01K0
R1321	315-0202-00			RES,FXD,FILM:2K OHM,5%,0.25W	57668	NTR25J-E 2K
R1323	315-0202-00			RES,FXD,FILM:2K OHM,5%,0.25W	57668	NTR25J-E 2K
R1341	315-0622-00			RES,FXD,FILM:6.2K OHM,5%,0.25W	19701	5043CX6K200J
R1343	315-0154-00			RES,FXD,FILM:150K OHM,5%,0.25W	57668	NTR25J-E150K
R1347	315-0332-00			RES,FXD,FILM:3.3K OHM,5%,0.25W	57668	NTR25J-E03K3
R1349	315-0471-00			RES,FXD,FILM:470 OHM,5%,0.25W	57668	NTR25J-E470E
R1351	315-0472-00			RES,FXD,FILM:4.7K OHM,5%,0.25W	57668	NTR25J-E04K7
R1369	315-0333-00			RES,FXD,FILM:33K OHM,5%,0.25W	57668	NTR25J-E33K0

Component No.	Tektronix Part No.	Serial/Assembly No. Effective	Dscont	Name & Description	Mfr. Code	Mfr. Part No.
R1443	315-0271-00			RES,FXD,FILM:270 OHM,5%,0.25W	57668	NTR25J-E270E
R1445	315-0472-00			RES,FXD,FILM:4.7K OHM,5%,0.25W	57668	NTR25J-E04K7
R1447	321-0312-00			RES,FXD,FILM:17.4K OHM,1%,0.125W,TC=T0	19701	5033ED17K40F
R1449	315-0101-00			RES,FXD,FILM:100 OHM,5%,0.25W	57668	NTR25J-E 100E
R1457	315-0391-00			RES,FXD,FILM:390 OHM,5%,0.25W	57668	NTR25J-E390E
R1473	315-0821-00			RES,FXD,FILM:820 OHM,5%,0.25W	19701	5043CX820R0J
R1475	315-0181-00			RES,FXD,FILM:180 OHM,5%,0.25W	57668	NTR25J-E180E
R1481	315-0103-00			RES,FXD,FILM:10K OHM,5%,0.25W	19701	5043CX10K00J
R1485	315-0223-00			RES,FXD,FILM:22K OHM,5%,0.25W	19701	5043CX22K00J92U
R1487	315-0240-00			RES,FXD,FILM:24 OHM,5%,0.25W	57668	NTR25J-E24E0
R1521	321-0377-00	B010100	B019999	RES,FXD,FILM:82.5K OHM,1%,0.125W,TC=T0	07716	CEAD82501F
R1521	321-0377-00	B020000		RES,FXD,FILM:82.5K OHM,1%,0.125W,TC=T0 (NOMINAL VALUE, SELECTED)	07716	CEAD82501F
R1531	315-0272-00			RES,FXD,FILM:2.7K OHM,5%,0.25W	57668	NTR25J-E02K7
R1533	315-0272-00			RES,FXD,FILM:2.7K OHM,5%,0.25W	57668	NTR25J-E02K7
R1561	315-0623-00			RES,FXD,FILM:62K OHM,5%,0.25W	19701	5043CX62K00J
R1567	315-0113-00			RES,FXD,FILM:11K OHM,5%,0.25W	19701	5043CX11K00J
R1581	315-0473-00	B010100	B080269	RES,FXD,FILM:47K OHM,5%,0.25W	57668	NTR25J-E47K0
R1583	315-0152-00			RES,FXD,FILM:1.5K OHM,5%,0.25W	57668	NTR25J-E01K5
R1623	315-0102-00			RES,FXD,FILM:1K OHM,5%,0.25W	57668	NTR25JE01K0
R1651	315-0274-00			RES,FXD,FILM:270K OHM,5%,0.25W	57668	NTR25J-E270K
R1661	315-0473-00			RES,FXD,FILM:47K OHM,5%,0.25W	57668	NTR25J-E47K0
R1665	315-0561-00			RES,FXD,FILM:560 OHM,5%,0.25W	19701	5043CX560R0J
R1667	315-0361-00			RES,FXD,FILM:360 OHM,5%,0.25W	19701	5043CX360R0J
R1669	315-0332-00			RES,FXD,FILM:3.3K OHM,5%,0.25W	57668	NTR25J-E03K3
R1683	315-0152-00			RES,FXD,FILM:1.5K OHM,5%,0.25W	57668	NTR25J-E01K5
R1741	315-0914-00			RES,FXD,FILM:910K OHM,5%,0.25W	19701	5043CX910K00J
R1743	315-0274-00			RES,FXD,FILM:270K OHM,5%,0.25W	57668	NTR25J-E270K
R1763	315-0272-00			RES,FXD,FILM:2.7K OHM,5%,0.25W	57668	NTR25J-E02K7
R1765	315-0393-00			RES,FXD,FILM:39K OHM,5%,0.25W	57668	NTR25J-E39K0
R1767	315-0153-00			RES,FXD,FILM:15K OHM,5%,0.25W	19701	5043CX15K00J
R1787	315-0152-00			RES,FXD,FILM:1.5K OHM,5%,0.25W	57668	NTR25J-E01K5
R1861	315-0102-00			RES,FXD,FILM:1K OHM,5%,0.25W	57668	NTR25JE01K0
R1865	315-0153-00			RES,FXD,FILM:15K OHM,5%,0.25W	19701	5043CX15K00J
R1867	315-0301-00			RES,FXD,FILM:300 OHM,5%,0.25W	57668	NTR25J-E300E
R1869	315-0153-00			RES,FXD,FILM:15K OHM,5%,0.25W	19701	5043CX15K00J
R1873	315-0241-00			RES,FXD,FILM:240 OHM,5%,0.25W	19701	5043CXZ40R0J
R1890	315-0102-00			RES,FXD,FILM:1K OHM,5%,0.25W	57668	NTR25JE01K0
R1963	315-0100-00			RES,FXD,FILM:10 OHM,5%,0.25W	19701	5043CX10RR00J
R1981	315-0391-00			RES,FXD,FILM:390 OHM,5%,0.25W	57668	NTR25J-E390E
R1987	315-0430-00			RES,FXD,FILM:43 OHM,5%,0.25W	19701	5043CX43R00J
R2071	311-1228-00			RES,VAR,NONWW:TRMR,10K OHM,0.5W	32997	3386F-T04-103
R2081	315-0472-00			RES,FXD,FILM:4.7K OHM,5%,0.25W	57668	NTR25J-E04K7
R2101	315-0102-00			RES,FXD,FILM:1K OHM,5%,0.25W	57668	NTR25JE01K0
R2103	315-0102-00			RES,FXD,FILM:1K OHM,5%,0.25W	57668	NTR25JE01K0
R2161	311-1228-00			RES,VAR,NONWW:TRMR,10K OHM,0.5W	32997	3386F-T04-103
R2170	315-0272-00			RES,FXD,FILM:2.7K OHM,5%,0.25W	57668	NTR25J-E02K7
R2173	315-0102-00			RES,FXD,FILM:1K OHM,5%,0.25W	57668	NTR25JE01K0
R2175	316-0220-00			RES,FXD,CMPSN:22 OHM,10%,0.25W	01121	CB2201
R2251	316-0103-00			RES,FXD,CMPSN:10K OHM,10%,0.25W	01121	CB1031
R2263	315-0273-00			RES,FXD,FILM:27K OHM,5%,0.25W	57668	NTR25J-E27K0
R2357	321-0287-00			RES,FXD,FILM:9.53K OHM,1%,0.125W,TC=T0	19701	5033ED9K530F
R2359	321-0321-00			RES,FXD,FILM:21.5K OHM,1%,0.125W,TC=T0	07716	CEAD21501F
R2361	315-0432-00			RES,FXD,FILM:4.3K OHM,5%,0.25W	57668	NTR25J-E04K3
R2363	315-0102-00			RES,FXD,FILM:1K OHM,5%,0.25W	57668	NTR25JE01K0
R2365	316-0470-00			RES,FXD,CMPSN:47 OHM,10%,0.25W	01121	CB4701
R2391	316-0102-00			RES,FXD,CMPSN:1K OHM,10%,0.25W	01121	CB1021
R2393	316-0102-00			RES,FXD,CMPSN:1K OHM,10%,0.25W	01121	CB1021
R2423	311-1228-00			RES,VAR,NONWW:TRMR,10K OHM,0.5W	32997	3386F-T04-103

Component No.	Tektronix Part No.	Serial/Assembly No. Effective	Dscont	Name & Description	Mfr. Code	Mfr. Part No.
R2425	315-0622-00			RES,FXD,FILM:6.2K OHM,5%,0.25W	19701	5043CX6K200J
R2426	316-0470-00			RES,FXD,CMPSN:47 OHM,10%,0.25W	01121	CB4701
R2433	315-0123-00			RES,FXD,FILM:12K OHM,5%,0.25W	57668	NTR25J-E12K0
R2435	315-0273-00			RES,FXD,FILM:27K OHM,5%,0.25W	57668	NTR25J-E27K0
R2451	321-0373-00			RES,FXD,FILM:75.0K OHM,1%,0.125W,TC=T0	19701	5033ED75K00F
R2453	311-1231-00			RES,VAR,NONWW:TRMR,25K OHM,0.5W	32997	3386F-T04-253
R2455	315-0103-00			RES,FXD,FILM:10K OHM,5%,0.25W	19701	5043CX10K00J
R2457	315-0103-00			RES,FXD,FILM:10K OHM,5%,0.25W	19701	5043CX10K00J
R2521	315-0302-00			RES,FXD,FILM:3K OHM,5%,0.25W	57668	NTR25J-E03K0
R2523	315-0152-00			RES,FXD,FILM:1.5K OHM,5%,0.25W	57668	NTR25J-E01K5
R2527	315-0470-00			RES,FXD,FILM:47 OHM,5%,0.25W	57668	NTR25J-E47E0
R2529	315-0301-00			RES,FXD,FILM:300 OHM,5%,0.25W	57668	NTR25J-E300E
R2541	316-0224-00			RES,FXD,CMPSN:220K OHM,10%,0.25W	01121	CB2241
R2563	315-0201-00			RES,FXD,FILM:200 OHM,5%,0.25W	57668	NTR25J-E200E
R3009	315-0681-00			RES,FXD,FILM:680 OHM,5%,0.25W	57668	NTR25J-E680E
R3011	321-0193-00			RES,FXD,FILM:1K OHM,1%,0.125W,TC=T0	19701	5033ED1K00F
R3025	315-0101-00			RES,FXD,FILM:100 OHM,5%,0.25W	57668	NTR25J-E 100E
R3027	315-0682-00			RES,FXD,FILM:6.8K OHM,5%,0.25W	57668	NTR25J-E06K8
R3031	321-0296-00			RES,FXD,FILM:11.8K OHM,1%,0.125W,TC=T0	07716	CEAD11801F
R3033	321-0241-00			RES,FXD,FILM:3.16K OHM,1%,0.125W,TC=T0	07716	CEAD31600F
R3049	321-0152-00			RES,FXD,FILM:374 OHM,1%,0.125W,TC=T0	07716	CEAD374R0F
R3051	315-0682-00			RES,FXD,FILM:6.8K OHM,5%,0.25W	57668	NTR25J-E06K8
R3053	321-0222-00			RES,FXD,FILM:2.00K OHM,1%,0.125W,TC=T0	19701	5033ED2K00F
R3061	311-1224-00			RES,VAR,NONWW:TRMR,500 OHM,0.5W	32997	3386F-T04-501
R3063	321-0222-00			RES,FXD,FILM:2.00K OHM,1%,0.125W,TC=T0	19701	5033ED2K00F
R3065	321-0181-00			RES,FXD,FILM:750 OHM,1%,0.125W,TC=T0	07716	CEAD750R0F
R3067	316-0101-00			RES,FXD,CMPSN:100 OHM,10%,0.25W	01121	CB1011
R3071	315-0333-00			RES,FXD,FILM:33K OHM,5%,0.25W	57668	NTR25J-E33K0
R3085	316-0221-00			RES,FXD,CMPSN:220 OHM,10%,0.25W	01121	CB2211
R3087	321-0085-00			RES,FXD,FILM:75 OHM,1%,0.125W,TC=T0	57668	CRB14FXE 75 OHM
R3089	315-0821-00	B030000	B070219	RES,FXD,FILM:820 OHM,5%,0.25W	19701	5043CX820R0J
R3089	315-0242-00	B070220		RES,FXD,FILM:2.4K OHM,5%,0.25W	57668	NTR25J-E02K4
R3101	315-0104-00			RES,FXD,FILM:100K OHM,5%,0.25W	57668	NTR25J-E100K
R3103	311-1231-00			RES,VAR,NONWW:TRMR,25K OHM,0.5W	32997	3386F-T04-253
R3107	315-0823-00			RES,FXD,FILM:82K OHM,5%,0.25W	57668	NTR25J-E82K
R3121	315-0203-00			RES,FXD,FILM:20K OHM,5%,0.25W	57668	NTR25J-E 20K
R3123	316-0470-00			RES,FXD,CMPSN:47 OHM,10%,0.25W	01121	CB4701
R3125	315-0474-00			RES,FXD,FILM:470K OHM,5%,0.25W	19701	5043CX470K0J92U
R3129	315-0102-00			RES,FXD,FILM:1K OHM,5%,0.25W	57668	NTR25JE01K0
R3141	316-0101-00			RES,FXD,CMPSN:100 OHM,10%,0.25W	01121	CB1011
R3145	315-0474-00			RES,FXD,FILM:470K OHM,5%,0.25W	19701	5043CX470K0J92U
R3147	315-0472-00			RES,FXD,FILM:4.7K OHM,5%,0.25W	57668	NTR25J-E04K7
R3151	315-0472-00			RES,FXD,FILM:4.7K OHM,5%,0.25W	57668	NTR25J-E04K7
R3153	315-0101-00			RES,FXD,FILM:100 OHM,5%,0.25W	57668	NTR25J-E 100E
R3161	315-0682-00			RES,FXD,FILM:6.8K OHM,5%,0.25W	57668	NTR25J-E06K8
R3163	315-0563-00			RES,FXD,FILM:56K OHM,5%,0.25W	19701	5043CX56K00J
R3165	315-0332-00			RES,FXD,FILM:3.3K OHM,5%,0.25W	57668	NTR25J-E03K3
R3169	315-0153-00			RES,FXD,FILM:15K OHM,5%,0.25W	19701	5043CX15K00J
R3177	315-0202-00			RES,FXD,FILM:2K OHM,5%,0.25W	57668	NTR25J-E 2K
R3179	316-0221-00			RES,FXD,CMPSN:220 OHM,10%,0.25W	01121	CB2211
R3181	315-0332-00			RES,FXD,FILM:3.3K OHM,5%,0.25W	57668	NTR25J-E03K3
R3185	316-0470-00			RES,FXD,CMPSN:47 OHM,10%,0.25W	01121	CB4701
R3189	315-0102-00			RES,FXD,FILM:1K OHM,5%,0.25W	57668	NTR25JE01K0
R3201	315-0102-00			RES,FXD,FILM:1K OHM,5%,0.25W	57668	NTR25JE01K0
R3203	315-0472-00			RES,FXD,FILM:4.7K OHM,5%,0.25W	57668	NTR25J-E04K7
R3205	315-0470-00			RES,FXD,FILM:47 OHM,5%,0.25W	57668	NTR25J-E47E0
R3207	316-0100-00			RES,FXD,CMPSN:10 OHM,10%,0.25W	01121	CB1001
R3209	315-0102-00			RES,FXD,FILM:1K OHM,5%,0.25W	57668	NTR25JE01K0
R3221	316-0100-00			RES,FXD,CMPSN:10 OHM,10%,0.25W	01121	CB1001

Component No.	Tektronix Part No.	Serial/Assembly No. Effective	Dscont	Name & Description	Mfr. Code	Mfr. Part No.
R3223	315-0823-00	B010100	B049999	RES,FXD,FILM:82K OHM,5%,0.25W	57668	NTR25J-E82K
R3223	315-0513-00	B050000		RES,FXD,FILM:51K OHM,5%,0.25W	57668	NTR25J-E51K0
R3225	315-0470-00			RES,FXD,FILM:47 OHM,5%,0.25W	57668	NTR25J-E47E0
R3227	315-0153-00			RES,FXD,FILM:15K OHM,5%,0.25W	19701	5043CX15K00J
R3231	315-0102-00			RES,FXD,FILM:1K OHM,5%,0.25W	57668	NTR25JE01K0
R3235	315-0106-00			RES,FXD,FILM:10M OHM,5%,0.25W	01121	CB1065
R3245	316-0470-00			RES,FXD,CMPSN:47 OHM,10%,0.25W	01121	CB4701
R3247	321-0164-00			RES,FXD,FILM:499 OHM,1%,0.125W,TC=T0	19701	5033ED499R0F
R3249	315-0182-00			RES,FXD,FILM:1.8K OHM,5%,0.25W	57668	NTR25J-E1K8
R3251	316-0470-00			RES,FXD,CMPSN:47 OHM,10%,0.25W	01121	CB4701
R3253	315-0823-00			RES,FXD,FILM:82K OHM,5%,0.25W	57668	NTR25J-E82K
R3261	315-0823-00			RES,FXD,FILM:82K OHM,5%,0.25W	57668	NTR25J-E82K
R3263	316-0470-00			RES,FXD,CMPSN:47 OHM,10%,0.25W	01121	CB4701
R3267	315-0106-00			RES,FXD,FILM:10M OHM,5%,0.25W	01121	CB1065
R3269	316-0470-00			RES,FXD,CMPSN:47 OHM,10%,0.25W	01121	CB4701
R3311	311-1224-00			RES,VAR,NONWW:TRMR,500 OHM,0.5W	32997	3386F-T04-501
R3313	315-0432-00			RES,FXD,FILM:4.3K OHM,5%,0.25W	57668	NTR25J-E04K3
R3315	315-0102-00			RES,FXD,FILM:1K OHM,5%,0.25W	57668	NTR25JE01K0
R3317	315-0123-00			RES,FXD,FILM:12K OHM,5%,0.25W	57668	NTR25J-E12K0
R3319	311-1233-00			RES,VAR,NONWW:TRMR,50K OHM,0.25W	32997	3386F-T05-503
R3321	315-0101-00			RES,FXD,FILM:100 OHM,5%,0.25W	57668	NTR25J-E 100E
R3323	321-0171-00			RES,FXD,FILM:590 OHM,1%,0.125W,TC=T0	19701	5033ED590R0F
R3325	316-0101-00			RES,FXD,CMPSN:100 OHM,10%,0.25W	01121	CB1011
R3341	321-0164-00			RES,FXD,FILM:499 OHM,1%,0.125W,TC=T0	19701	5033ED499R0F
R3343	321-0164-00			RES,FXD,FILM:499 OHM,1%,0.125W,TC=T0	19701	5033ED499R0F
R3349	316-0470-00			RES,FXD,CMPSN:47 OHM,10%,0.25W	01121	CB4701
R3381	321-0164-00			RES,FXD,FILM:499 OHM,1%,0.125W,TC=T0	19701	5033ED499R0F
R3383	315-0511-00			RES,FXD,FILM:510 OHM,5%,0.25W	19701	5043CX510R0J
R3385	321-0164-00			RES,FXD,FILM:499 OHM,1%,0.125W,TC=T0	19701	5033ED499R0F
R3389	321-0171-00			RES,FXD,FILM:590 OHM,1%,0.125W,TC=T0	19701	5033ED590R0F
R3391	316-0101-00			RES,FXD,CMPSN:100 OHM,10%,0.25W	01121	CB1011
R3403	321-0085-00			RES,FXD,FILM:75 OHM,1%,0.125W,TC=T0	57668	CRB14FXE 75 OHM
R3405	316-0330-00			RES,FXD,CMPSN:33 OHM,10%,0.25W	01121	CB3301
R3407	315-0680-00			RES,FXD,FILM:68 OHM,5%,0.25W	57668	NTR25J-E68E0
R3417	315-0821-00			RES,FXD,FILM:820 OHM,5%,0.25W	19701	5043CX820R0J
R3421	321-0210-00			RES,FXD,FILM:1.50K OHM,1%,0.125W,TC=T0	19701	5033ED1K50F
R3423	301-0122-00			RES,FXD,FILM:1.2K OHM,5%,0.5W	57668	TR50J-E 1K2
R3425	315-0221-00			RES,FXD,FILM:220 OHM,5%,0.25W	57668	NTR25J-E220E
R3427	315-0151-00			RES,FXD,FILM:150 OHM,5%,0.25W	57668	NTR25J-E150E
R3441	315-0362-00			RES,FXD,FILM:3.6K OHM,5%,0.25W	19701	5043CX3K600J
R3443	316-0100-00			RES,FXD,CMPSN:10 OHM,10%,0.25W	01121	CB1001
R3445	315-0333-00			RES,FXD,FILM:33K OHM,5%,0.25W	57668	NTR25J-E33K0
R3449	311-1233-00			RES,VAR,NONWW:TRMR,50K OHM,0.25W	32997	3386F-T05-503
R3453	321-0239-00			RES,FXD,FILM:3.01K OHM,1%,0.125W,TC=T0	19701	5043ED3K010F
R3455	315-0431-00			RES,FXD,FILM:430 OHM,5%,0.25W	19701	5043CX430R0J
R3457	315-0182-00			RES,FXD,FILM:1.8K OHM,5%,0.25W	57668	NTR25J-E1K8
R3459	321-0131-00			RES,FXD,FILM:226 OHM,1%,0.125W,TC=T0	19701	5043ED226R0F
R3461	315-0182-00			RES,FXD,FILM:1.8K OHM,5%,0.25W	57668	NTR25J-E1K8
R3463	321-0131-00			RES,FXD,FILM:226 OHM,1%,0.125W,TC=T0	19701	5043ED226R0F
R3465	321-0178-00			RES,FXD,FILM:698 OHM,1%,0.125W,TC=T0	07716	CEAD698R0F
R3467	311-1224-00			RES,VAR,NONWW:TRMR,500 OHM,0.5W	32997	3386F-T04-501
R3469	321-0126-00			RES,FXD,FILM:200 OHM,1%,0.125W,TC=T0	19701	5033ED200R0F
R3471	321-0126-00			RES,FXD,FILM:200 OHM,1%,0.125W,TC=T0	19701	5033ED200R0F
R3477	321-0165-00			RES,FXD,FILM:511 OHM,1%,0.125W,TC=T0	07716	CEAD511R0F
R3479	321-0258-00			RES,FXD,FILM:4.75K OHM,1%,0.125W,TC=T0	19701	5033ED4K750F
R3483	321-0238-00			RES,FXD,FILM:2.94K OHM,1%,0.125W,TC=T0	07716	CEAD29400F
R3501	315-0123-00			RES,FXD,FILM:12K OHM,5%,0.25W	57668	NTR25J-E12K0
R3503	311-1233-00			RES,VAR,NONWW:TRMR,50K OHM,0.25W	32997	3386F-T05-503
R3505	315-0101-00			RES,FXD,FILM:100 OHM,5%,0.25W	57668	NTR25J-E 100E

Component No.	Tektronix Part No.	Serial/Assembly No. Effective	Dscont	Name & Description	Mfr. Code	Mfr. Part No.
R3507	321-0171-00			RES,FXD,FILM:590 OHM,1%,0.125W,TC=T0	19701	5033ED590R0F
R3509	316-0101-00			RES,FXD,CMPSN:100 OHM,10%,0.25W	01121	CB1011
R3515	321-0612-03			RES,FXD,FILM:500 OHM,0.25%,0.125W,TC=T2	19701	5033RC500R0C
R3517	316-0470-00			RES,FXD,CMPSN:47 OHM,10%,0.25W	01121	CB4701
R3521	321-0164-00			RES,FXD,FILM:499 OHM,1%,0.125W,TC=T0	19701	5033ED499R0F
R3523	321-0164-00			RES,FXD,FILM:499 OHM,1%,0.125W,TC=T0	19701	5033ED499R0F
R3535	316-0470-00			RES,FXD,CMPSN:47 OHM,10%,0.25W	01121	CB4701
R3561	315-0182-00			RES,FXD,FILM:1.8K OHM,5%,0.25W	57668	NTR25J-E1K8
R3565	321-0164-00			RES,FXD,FILM:499 OHM,1%,0.125W,TC=T0	19701	5033ED499R0F
R3567	315-0511-00			RES,FXD,FILM:510 OHM,5%,0.25W	19701	5043CX510R0J
R3569	321-0164-00			RES,FXD,FILM:499 OHM,1%,0.125W,TC=T0	19701	5033ED499R0F
R3583	316-0101-00			RES,FXD,CMPSN:100 OHM,10%,0.25W	01121	CB1011
R3585	321-0171-00			RES,FXD,FILM:590 OHM,1%,0.125W,TC=T0	19701	5033ED590R0F
R3587	316-0470-00			RES,FXD,CMPSN:47 OHM,10%,0.25W	01121	CB4701
R3601	321-0085-00			RES,FXD,FILM:75 OHM,1%,0.125W,TC=T0	57668	CRB14FXE 75 OHM
R3602	316-0561-00	B010100	B079999	RES,FXD,CMPSN:560 OHM,10%,0.25W	01121	CB5611
R3602	315-0681-00	B080000		RES,FXD,FILM:680 OHM,5%,0.25W	57668	NTR25J-E680E
R3603	315-0680-00			RES,FXD,FILM:68 OHM,5%,0.25W	57668	NTR25J-E68E0
R3607	315-0221-00			RES,FXD,FILM:220 OHM,5%,0.25W	57668	NTR25J-E220E
R3609	315-0821-00			RES,FXD,FILM:820 OHM,5%,0.25W	19701	5043CX820R0J
R3613	316-0330-00			RES,FXD,CMPSN:33 OHM,10%,0.25W	01121	CB3301
R3623	316-0100-00			RES,FXD,CMPSN:10 OHM,10%,0.25W	01121	CB1001
R3625	315-0362-00			RES,FXD,FILM:3.6K OHM,5%,0.25W	19701	5043CX3K600J
R3627	315-0151-00			RES,FXD,FILM:150 OHM,5%,0.25W	57668	NTR25J-E150E
R3633	301-0122-00			RES,FXD,FILM:1.2K OHM,5%,0.5W	57668	TR50J-E 1K2
R3635	315-0221-00			RES,FXD,FILM:220 OHM,5%,0.25W	57668	NTR25J-E220E
R3641	321-0210-00			RES,FXD,FILM:1.50K OHM,1%,0.125W,TC=T0	19701	5033ED1K50F
R3643	321-0226-00			RES,FXD,FILM:2.21K OHM,1%,0.125W,TC=T0	07716	CEAD22100F
R3645	315-0333-00			RES,FXD,FILM:33K OHM,5%,0.25W	57668	NTR25J-E33K0
R3647	321-0239-00			RES,FXD,FILM:3.01K OHM,1%,0.125W,TC=T0	19701	5043ED3K010F
R3651	315-0431-00			RES,FXD,FILM:430 OHM,5%,0.25W	19701	5043CX430R0J
R3653	315-0182-00			RES,FXD,FILM:1.8K OHM,5%,0.25W	57668	NTR25J-E1K8
R3655	321-0131-00			RES,FXD,FILM:226 OHM,1%,0.125W,TC=T0	19701	5043ED226R0F
R3661	311-1224-00			RES,VAR,NONWW:TRMR,500 OHM,0.5W	32997	3386F-T04-501
R3663	311-1233-00			RES,VAR,NONWW:TRMR,50K OHM,0.25W	32997	3386F-T05-503
R3665	321-0126-00			RES,FXD,FILM:200 OHM,1%,0.125W,TC=T0	19701	5033ED200R0F
R3667	321-0126-00			RES,FXD,FILM:200 OHM,1%,0.125W,TC=T0	19701	5033ED200R0F
R3669	321-0159-00			RES,FXD,FILM:442 OHM,1%,0.125W,TC=T0	07716	CEAD442R0F
R3671	321-0131-00			RES,FXD,FILM:226 OHM,1%,0.125W,TC=T0	19701	5043ED226R0F
R3673	315-0182-00			RES,FXD,FILM:1.8K OHM,5%,0.25W	57668	NTR25J-E1K8
R3679	321-0165-00			RES,FXD,FILM:511 OHM,1%,0.125W,TC=T0	07716	CEAD511R0F
R3685	321-0238-00			RES,FXD,FILM:2.94K OHM,1%,0.125W,TC=T0	07716	CEAD29400F
R3691	321-0258-00			RES,FXD,FILM:4.75K OHM,1%,0.125W,TC=T0	19701	5033ED4K750F
R4311	315-0101-00			RES,FXD,FILM:100 OHM,5%,0.25W	57668	NTR25J-E 100E
R4321	315-0153-00			RES,FXD,FILM:15K OHM,5%,0.25W	19701	5043CX15K00J
R4323	315-0153-00			RES,FXD,FILM:15K OHM,5%,0.25W	19701	5043CX15K00J
R4409	321-0222-00			RES,FXD,FILM:2.00K OHM,1%,0.125W,TC=T0	19701	5033ED2K00F
R4412	315-0472-00			RES,FXD,FILM:4.7K OHM,5%,0.25W	57668	NTR25J-E04K7
R4421	315-0132-00			RES,FXD,FILM:1.3K OHM,5%,0.25W	57668	NTR25J-E01K3
R4423	321-0128-00			RES,FXD,FILM:210 OHM,1%,0.125W,TC=T0	07716	CEAD210R0F
R4471	302-0102-00			RES,FXD,CMPSN:1K OHM,10%,0.5W	01121	EB 1021
R4511	315-0202-00			RES,FXD,FILM:2K OHM,5%,0.25W	57668	NTR25J-E 2K
R4513	315-0202-00			RES,FXD,FILM:2K OHM,5%,0.25W	57668	NTR25J-E 2K
R4515	315-0113-00			RES,FXD,FILM:11K OHM,5%,0.25W	19701	5043CX11K00J
R4517	321-0222-00			RES,FXD,FILM:2.00K OHM,1%,0.125W,TC=T0	19701	5033ED2K00F
R4521	315-0220-00			RES,FXD,FILM:22 OHM,5%,0.25W	19701	5043CX22R00J
R4533	321-0128-00			RES,FXD,FILM:210 OHM,1%,0.125W,TC=T0	07716	CEAD210R0F
R4615	311-1225-00			RES,VAR,NONWW:TRMR,1K OHM,0.5W	32997	3386F-T04-102
R4631	315-0362-00			RES,FXD,FILM:3.6K OHM,5%,0.25W	19701	5043CX3K600J

Component No.	Tektronix Part No.	Serial/Assembly No. Effective	Dscont	Name & Description	Mfr. Code	Mfr. Part No.
R4633	315-0472-00			RES,FXD,FILM:4.7K OHM,5%,0.25W	57668	NTR25J-E04K7
R4634	315-0471-00	B080000		RES,FXD,FILM:470 OHM,5%,0.25W	57668	NTR25J-E470E
R4713	315-0102-00			RES,FXD,FILM:1K OHM,5%,0.25W	57668	NTR25JE01K0
R4717	311-1230-00			RES,VAR,NONWW:TRMR,20K OHM,0.5W	32997	3386F-T04-203
R4719	315-0682-00			RES,FXD,FILM:6.8K OHM,5%,0.25W	57668	NTR25J-E06K8
R4731	315-0220-00			RES,FXD,FILM:22 OHM,5%,0.25W	19701	5043CX22R00J
R4733	315-0102-00			RES,FXD,FILM:1K OHM,5%,0.25W	57668	NTR25JE01K0
R4735	315-0102-00			RES,FXD,FILM:1K OHM,5%,0.25W	57668	NTR25JE01K0
R4811	315-0392-00			RES,FXD,FILM:3.9K OHM,5%,0.25W	57668	NTR25J-E03K9
R4813	315-0470-00			RES,FXD,FILM:47 OHM,5%,0.25W	57668	NTR25J-E47E0
R4815	315-0220-00			RES,FXD,FILM:22 OHM,5%,0.25W	19701	5043CX22R00J
R4817	315-0220-00			RES,FXD,FILM:22 OHM,5%,0.25W	19701	5043CX22R00J
R4833	315-0392-00			RES,FXD,FILM:3.9K OHM,5%,0.25W	57668	NTR25J-E03K9
R4835	321-0222-00			RES,FXD,FILM:2.00K OHM,1%,0.125W,TC=T0	19701	5033ED2K00F
R4837	315-0102-00			RES,FXD,FILM:1K OHM,5%,0.25W	57668	NTR25JE01K0
R4931	321-0081-00			RES,FXD,FILM:68.1 OHM,1%,0.125W,TC=T0	91637	CMF55116G68R10F
R5533	322-0612-00			RES,FXD,FILM:500 OHM,1%,0.25W,TC=T0	75042	CEBT0-5000F
R5573	321-0212-00	B010100	B089999	RES,FXD,FILM:1.58K OHM,1%,0.125W,TC=70 (STANDARD & OPTION 1)	19701	5033ED1K58F
R5573	321-0101-00	B090000		RES,FXD,FILM:110 OHM,1%,0.125W,TC=T0 (STANDARD & OPTION 1)	07716	CEAD110R0F
R5573	321-0101-00			RES,FXD,FILM:110 OHM,1%,0.125W,TC=T0 (OPTION 2 ONLY)	07716	CEAD110R0F
R5575	322-0612-00			RES,FXD,FILM:500 OHM,1%,0.25W,TC=T0	75042	CEBT0-5000F
R5579	321-0115-00	B010100	B089999	RES,FXD,FILM:154 OHM,1%,0.125W,TC=T0 (STANDARD & OPTION 1)	19701	5043ED154R0F
R5579	321-0227-00	B090000		RES,FXD,FILM:2.26K OHM,1%,0.125W,TC=T0 (STANDARD & OPTION 1)	07716	CEAD22600F
R5579	321-0227-00			RES,FXD,FILM:2.26K OHM,1%,0.125W,TC=T0 (OPTION 2 ONLY)	07716	CEAD22600F
R5693	321-0114-00	B010100	B089999	RES,FXD,FILM:150 OHM,1%,0.125 W,TC=T0 (STANDARD ONLY)	19701	5033ED150R0F
R5693	321-0117-00	B090000		RES,FXD,FILM:162 OHM,1%,0.125W,TC=T0 (STANDARD ONLY)	07716	CEAD162R0F
R5693	321-0117-00			RES,FXD,FILM:162 OHM,1%,0.125W,TC=T0 (OPTION 1 ONLY)	07716	CEAD162R0F
R5695	321-0201-00	B010100	B089999	RES,FXD,FILM:1.21K OHM,1%,0.125W,TC=T0 (STANDARD ONLY)	19701	5043ED1K210F
R5695	321-0198-00	B090000		RES,FXD,FILM:1.13K OHM,1%,0.125W,TC=T0 (STANDARD ONLY)	07716	CEAD11300F
R5695	321-0198-00			RES,FXD,FILM:1.13K OHM,1%,0.125W,TC=T0 (OPTION 1 ONLY)	07716	CEAD11300F
R9201	316-0224-00			RES,FXD,CMPSN:220K OHM,10%,0.25W	01121	CB2241
R9400	311-0580-00			RES,VAR,NONWW:PNL,50K OHM,0.5W	01121	W-8155
R9420	311-0170-00			RES,VAR,NONWW:PNL,20K OHM,0.5W	12697	381-CM26546
R9430	315-0103-00			RES,FXD,FILM:10K OHM,5%,0.25W	19701	5043CX10K00J
R9450	315-0332-00			RES,FXD,FILM:3.3K OHM,5%,0.25W	57668	NTR25J-E03K3
R9460	311-1485-00			RES,VAR,NONWW:PNL,500 OHM,1W,W/SW (PART OF S9460)	01121	11W111
R9463	321-1154-08			RES,FXD,FILM:397 OHM,1%,0.125W,TC=T2	91637	MFF1816D397R0F
R9466	321-0152-00			RES,FXD,FILM:374 OHM,1%,0.125W,TC=T0	07716	CEAD374R0F
R9469	321-0181-00			RES,FXD,FILM:750 OHM,1%,0.125W,TC=T0	07716	CEAD750R0F
R9470	315-0622-00			RES,FXD,FILM:6.2K OHM,5%,0.25W	19701	5043CX6K200J
R9505	321-0191-00			RES,FXD,FILM:953 OHM,1%,0.125W,TC=T0	07716	CEAD953R0F
R9515	321-0179-00			RES,FXD,FILM:715 OHM,1%,0.125W,TC=T0	07716	CEAD715R0F
R9525	321-0191-00			RES,FXD,FILM:953 OHM,1%,0.125W,TC=T0	07716	CEAD953R0F
R9535	321-0172-00			RES,FXD,FILM:604 OHM,1%,0.125W,TC=T0	19701	5033ED604R0F
R9545	321-0231-00			RES,FXD,FILM:2.49K OHM,1%,0.125W,TC=T0	19701	5033ED2K49F
R9555	321-0172-00			RES,FXD,FILM:604 OHM,1%,0.125W,TC=T0	19701	5033ED604R0F
R9565	321-0166-00			RES,FXD,FILM:523 OHM,1%,0.125W,TC=T0	07716	CEAD523R0F
R9575	321-0279-00			RES,FXD,FILM:7.87K OHM,1%,0.125W,TC=T0	07716	CEAD78700F

Component No.	Tektronix Part No.	Serial/Assembly No. Effective	Dscont	Name & Description	Mfr. Code	Mfr. Part No.
R9585	321-0166-00			RES,FXD,FILM:523 OHM,1%,0.125W,TC=T0	07716	CEAD523R0F
R9595	321-0164-00			RES,FXD,FILM:499 OHM,1%,0.125W,TC=T0	19701	5033ED499R0F
R9613	321-0283-00			RES,FXD,FILM:8.66K OHM,1%,0.125W,TC=T0	19701	5043ED8K660F
R9615	321-0074-00			RES,FXD,FILM:57.6 OHM,1%,0.125W,TC=T0	91637	CMF55116G57R60F
R9617	321-0283-00			RES,FXD,FILM:8.66K OHM,1%,0.125W,TC=T0	19701	5043ED8K660F
R9623	321-0254-00			RES,FXD,FILM:4.32K OHM,1%,0.125W,TC=T0	07716	CEAD43200F
R9625	321-0103-00			RES,FXD,FILM:115 OHM,1%,0.125W,TC=T0	07716	CEAD115R0F
R9627	321-0254-00			RES,FXD,FILM:4.32K OHM,1%,0.125W,TC=T0	07716	CEAD43200F
R9633	321-0238-00			RES,FXD,FILM:2.94K OHM,1%,0.125W,TC=T0	07716	CEAD29400F
R9635	321-0120-00			RES,FXD,FILM:174 OHM,1%,0.125W,TC=T0	07716	CEAD174R0F
R9637	321-0238-00			RES,FXD,FILM:2.94K OHM,1%,0.125W,TC=T0	07716	CEAD29400F
R9643	321-0226-00			RES,FXD,FILM:2.21K OHM,1%,0.125W,TC=T0	07716	CEAD22100F
R9645	321-0133-00			RES,FXD,FILM:237 OHM,1%,0.125W,TC=T0	07716	CEAD237R0F
R9647	321-0226-00			RES,FXD,FILM:2.21K OHM,1%,0.125W,TC=T0	07716	CEAD22100F
R3653	321-0217-00			RES,FXD,FILM:1.78K OHM,1%,0.125W,TC=T0	19701	5043D1K780F
R9655	321-0143-00			RES,FXD,FILM:301 OHM,1%,0.125W,TC=T0	07716	CEAD301R0F
R9657	321-0217-00			RES,FXD,FILM:1.78K OHM,1%,0.125W,TC=T0	19701	5043D1K780F
R9663	321-0210-00			RES,FXD,FILM:1.50K OHM,1%,0.125W,TC=T0	19701	5033ED1K50F
R9665	321-0152-00			RES,FXD,FILM:374 OHM,1%,0.125W,TC=T0	07716	CEAD374R0F
R9667	321-0210-00			RES,FXD,FILM:1.50K OHM,1%,0.125W,TC=T0	19701	5033ED1K50F
R9673	321-0203-00			RES,FXD,FILM:1.27K OHM,1%,0.125W,TC=T0	07716	CEAD12700F
R9675	321-0159-00			RES,FXD,FILM:442 OHM,1%,0.125W,TC=T0	07716	CEAD442R0F
R9677	321-0203-00			RES,FXD,FILM:1.27K OHM,1%,0.125W,TC=T0	07716	CEAD12700F
R9683	321-0200-00			RES,FXD,FILM:1.18K OHM,1%,0.125W,TC=T0	19701	5033ED11K80F
R9685	321-0166-00			RES,FXD,FILM:523 OHM,1%,0.125W,TC=T0	07716	CEAD523R0F
R9687	321-0200-00			RES,FXD,FILM:1.18K OHM,1%,0.125W,TC=T0	19701	5033ED11K80F
R9693	321-0195-00			RES,FXD,FILM:1.05K OHM,1%,0.125W,TC=T0	07716	CEAD10500F
R9695	321-0173-00			RES,FXD,FILM:619 OHM,1%,0.125W,TC=T0	07716	CEAD619R0F
R9697	321-0195-00			RES,FXD,FILM:1.05K OHM,1%,0.125W,TC=T0	07716	CEAD10500F
R9730	321-0312-00			RES,FXD,FILM:17.4K OHM,1%,0.125W,TC=T0	19701	5033ED17K40F
R9750	321-0044-00			RES,FXD,FILM:28.0 OHM,1%,0.125W,TC=T0	91637	CMF55116G28R00F
R9770	321-0312-00			RES,FXD,FILM:17.4K OHM,1%,0.125W,TC=T0	19701	5033ED17K40F
R9800	315-0101-00			RES,FXD,FILM:100 OHM,5%,0.25W	57668	NTR25J-E 100E
R9801	311-1268-00			RES,VAR,NONWW:TRMR,10K OHM,0.5W	32997	3329P-L58-103
R9802	315-0101-00			RES,FXD,FILM:100 OHM,5%,0.25W	57668	NTR25J-E 100E
R9804	308-0245-00			RES,FXD,WW:0.6 OHM,5%,2W	00213	310S .6-5
R9806	315-0431-00			RES,FXD,FILM:430 OHM,5%,0.25W	19701	5043CX430R0J
R9808	321-0197-00			RES,FXD,FILM:1.10K OHM,1%,0.125W,TC=T0	07716	CEAD11000F
R9810	321-0189-00			RES,FXD,FILM:909 OHM,1%,0.125W,TC=T2	19701	5033ED909R0F
R9812	315-0752-00			RES,FXD,FILM:7.5K OHM,5%,0.25W	57668	NTR25J-E07K5
R9814	315-0101-00			RES,FXD,FILM:100 OHM,5%,0.25W	57668	NTR25J-E 100E
R9816	315-0471-00			RES,FXD,FILM:470 OHM,5%,0.25W	57668	NTR25J-E470E
R9818	315-0751-00			RES,FXD,FILM:750 OHM,5%,0.25W	57668	NTR25J-E750E
R9830	315-0101-00			RES,FXD,FILM:100 OHM,5%,0.25W	57668	NTR25J-E 100E
R9831	311-1268-00			RES,VAR,NONWW:TRMR,10K OHM,0.5W	32997	3329P-L58-103
R9832	308-0459-00			RES,FXD,WW:1.1 OHM,5%,3W	01686	T28-791.1-5
R9834	315-0101-00			RES,FXD,FILM:100 OHM,5%,0.25W	57668	NTR25J-E 100E
R9836	315-0431-00			RES,FXD,FILM:430 OHM,5%,0.25W	19701	5043CX430R0J
R9838	321-0224-00			RES,FXD,FILM:2.10K OHM,1%,0.125W,TC=T0	07716	CEAD21000F
R9840	321-0189-00			RES,FXD,FILM:909 OHM,1%,0.125W,TC=T2	19701	5033ED909R0F
R9842	315-0472-00			RES,FXD,FILM:4.7K OHM,5%,0.25W	57668	NTR25J-E04K7
R9844	315-0471-00			RES,FXD,FILM:470 OHM,5%,0.25W	57668	NTR25J-E470E
R9846	315-0301-00			RES,FXD,FILM:300 OHM,5%,0.25W	57668	NTR25J-E300E
R9848	315-0182-00			RES,FXD,FILM:1.8K OHM,5%,0.25W	57668	NTR25J-E1K8
R9850	315-0152-00			RES,FXD,FILM:1.5K OHM,5%,0.25W	57668	NTR25J-E01K5
R9851	311-1268-00			RES,VAR,NONWW:TRMR,10K OHM,0.5W	32997	3329P-L58-103
R9852	315-0431-00			RES,FXD,FILM:430 OHM,5%,0.25W	19701	5043CX430R0J
R9854	321-0172-00			RES,FXD,FILM:604 OHM,1%,0.125W,TC=T0	19701	5033ED604R0F
R9856	321-0189-00			RES,FXD,FILM:909 OHM,1%,0.125W,TC=T2	19701	5033ED909R0F

Component No.	Tektronix Part No.	Serial/Assembly No. Effective	Dscont	Name & Description	Mfr. Code	Mfr. Part No.
R9858	321-0173-00			RES,FXD,FILM:619 OHM,1%,0.125W,TC=T0	07716	CEAD619R0F
R9860	315-0471-00			RES,FXD,FILM:470 OHM,5%,0.25W	57668	NTR25J-E470E
R9862	315-0301-00			RES,FXD,FILM:300 OHM,5%,0.25W	57668	NTR25J-E300E
R9864	315-0472-00			RES,FXD,FILM:4.7K OHM,5%,0.25W	57668	NTR25J-E04K7
R9866	315-0101-00			RES,FXD,FILM:100 OHM,5%,0.25W	57668	NTR25J-E 100E
R9868	315-0101-00			RES,FXD,FILM:100 OHM,5%,0.25W	57668	NTR25J-E 100E
R9870	315-0331-00			RES,FXD,FILM:330 OHM,5%,0.25W	57668	NTR25J-E330E
R9872	315-0682-00			RES,FXD,FILM:6.8K OHM,5%,0.25W	57668	NTR25J-E06K8
R9874	308-0459-00			RES,FXD,WW:1.1 OHM,5%,3W	01686	T2B-791.1-5
R9905	315-0153-00			RES,FXD,FILM:15K OHM,5%,0.25W	19701	5043CX15K00J
R9913	302-0102-00			RES,FXD,CMPSN:1K OHM,10%,0.5W	01121	EB 1021
S9201	260-0834-00			SWITCH,TOGGLE:DPDT,5A,125VAC,ON-ON	09353	U21-SHZQE
S9300	260-0731-00			SWITCH,LEVER:1 SECT,2 POSN,30 DEG	80009	260-0731-00
S9340	260-1473-00			SWITCH,ROTARY:NOISE MEASUREMENT 7	80009	260-1473-00
S9360	260-0621-00			SWITCH,LEVER:1 SECT,3 POSN,30 DEG	80009	260-0621-00
S9380	260-1474-00			SWITCH,ROTARY:LINE SELECTOR	80009	260-1474-00
S9440	260-0621-00			SWITCH,LEVER:1 SECT,3 POSN,30 DEG	80009	260-0621-00
S9460	----- -----			(PART OF R9460)		
S9480	260-0664-00			SWITCH,LEVER:1 SECT,2 POSN,30 DEG	80009	260-0664-00
S9500	260-1475-00			SWITCH,ROTARY:NOISE ATTEN (45 DEG)	80009	260-1475-00
S9500	262-0982-00	B070000		SWITCH,WIRED:OFF TO 20 DB NOISE LEVEL	80009	262-0982-00
S9600	260-1476-00			SWITCH,ROTARY:NOISE ATTEN (30 DEG)	76854	5-16951-416
S9600	262-0983-00	B070000		SWITCH,WIRED:9 TO 0 DB NOISE LEVEL	80009	262-0983-00
T9001	120-0820-00	B010100	B039999	XFMR,PWR,STPDN:	80009	120-0820-00
T9001	120-0820-01	B040000		XFMR,PWR,STPDN:	80009	120-0820-01
U1401	156-0072-02			MICROCKT,DGTL:MONOSTABLE MV,SCRN	18324	N74121(NB OR FB)
U1501	156-0034-02			MICROCKT,DGTL:DUAL 4 INP NAND GATE,SCRN	18324	N7420(NB OR FB)
U1535	156-0030-03			MICROCKT,DGTL:QUAD 2 INPUT NAND GATE,SCRN	18324	N7400(NB OR FB)
U1601	156-0078-02			MICROCKT,DGTL:1 OF 16 DECODER/DEMUX,SCRN	18324	N74154(NB OR FB)
U1631	156-0032-03			MICROCKT,DGTL:4 BIT BINARY COUNTER,SCRN	01295	SN7493NP3
U1721	156-0041-05			MICROCKT,DGTL:DUAL D FLIP FLOP SCRN	01295	SN7474NP3
U1801	156-0041-05			MICROCKT,DGTL:DUAL D FLIP FLOP SCRN	01295	SN7474NP3
U1831	156-0041-05			MICROCKT,DGTL:DUAL D FLIP FLOP SCRN	01295	SN7474NP3
U2021	156-0047-02			MICROCKT,DGTL:TPL 3 INP,NAND GATE	18324	N7410(NB OR FB)
U2031	156-0035-00			MICROCKT,DGTL:SGL 8-INPUT NAND GATE	01295	SN7430N
U2063	156-0172-02			MICROCKT,DGTL:DUAL RETRIG MONOSTABLE MV	07263	74123PCQR
U2083	156-0041-05			MICROCKT,DGTL:DUAL D FLIP FLOP SCRN	01295	SN7474NP3
U2131	156-0035-00			MICROCKT,DGTL:SGL 8-INPUT NAND GATE	01295	SN7430N
U2210	156-0030-03			MICROCKT,DGTL:QUAD 2 INPUT NAND GATE,SCRN	18324	N7400(NB OR FB)
U2211	156-0041-05			MICROCKT,DGTL:DUAL D FLIP FLOP SCRN	01295	SN7474NP3
U2231	156-0035-00			MICROCKT,DGTL:SGL 8-INPUT NAND GATE	01295	SN7430N
U2251	156-0129-02			MICROCKT,DGTL:QUAD 2-INP & GATE,SCRN	18324	N7408(NB OR FB)
U2271	156-0041-05			MICROCKT,DGTL:DUAL D FLIP FLOP SCRN	01295	SN7474NP3
U2273	156-0041-05			MICROCKT,DGTL:DUAL D FLIP FLOP SCRN	01295	SN7474NP3
U2291	156-0041-05			MICROCKT,DGTL:DUAL D FLIP FLOP SCRN	01295	SN7474NP3
U2293	156-0041-05			MICROCKT,DGTL:DUAL D FLIP FLOP SCRN	01295	SN7474NP3
U3363	155-0022-00			MICROCKT,DGTL:CHANNEL SWITCH	80009	155-0022-00
U3547	155-0022-00			MICROCKT,DGTL:CHANNEL SWITCH	80009	155-0022-00
VR9850	152-0212-00			SEMICOND DVC,DI:ZEN,SI,9V,5%,0.5W,DO-7	04713	SZ50646RL

DIAGRAMS AND CIRCUIT BOARD ILLUSTRATIONS

Symbols and Reference Designators

Electrical components shown on the diagrams are in the following units unless noted otherwise:

Capacitors =	Values one or greater are in picofarads (pF).
	Values less than one are in microfarads (μF).
Resistors =	Ohms (Ω)

Symbols used on the diagrams are based on USA Standard U32.2-1970.

Logic symbology is based on MIL-STD-806B in terms of positive logic. Logic symbols depict the logic function performed and may differ from the manufacturer's data.

The following special symbols are used on the diagrams:

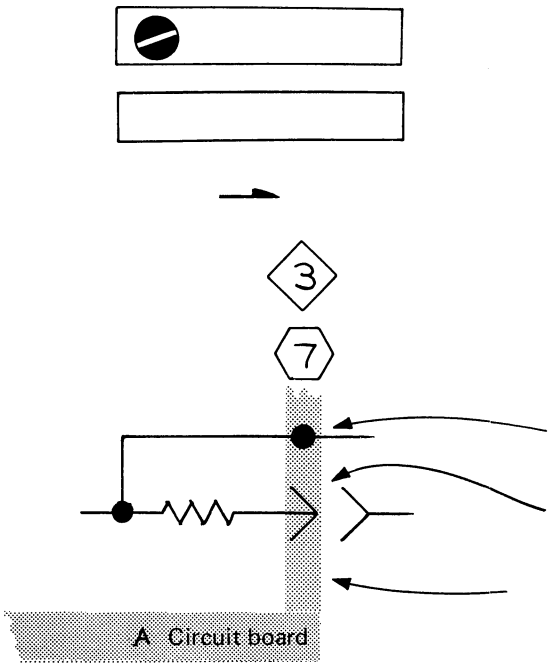

External Screwdriver adjustment.

External control or connector.

Clockwise control rotation in direction of arrow.

Refer to diagram number indicated in diamond.

Refer to waveform number indicated in hexagon.

Connection made to circuit board by soldering.

Connection made to circuit board with interconnecting pin.

Grey tint encloses components located on circuit board.

The following prefix letters are used as reference designators to identify components or assemblies on the diagrams.

A	Assembly, separable or repairable (circuit board, etc.)
AT	Attenuator, fixed or variable
B	Motor
BT	Battery
C	Capacitor, fixed or variable
CR	Diode, signal or rectifier
DL	Delay line
DS	Indicating device (lamp)
F	Fuse
FL	Filter
H	Heat dissipating device (heat sink, heat radiator, etc.)
HR	Heater
J	Connector, stationary portion
K	Relay
L	Inductor, fixed or variable
LR	Inductor/resistor combination
M	Meter
Q	Transistor or silicon-controlled rectifier
P	Connector, movable portion
R	Resistor, fixed or variable
RT	Thermistor
S	Switch
T	Transformer
TP	Test point
U	Assembly, inseparable or non-repairable (integrated circuit, etc.)
V	Electron tube
VR	Voltage regulator (zener diode, etc.)
Y	Crystal

VOLTAGE AND WAVEFORM CONDITIONS

Circuit voltages measured with a 20,000 Ω/volt VOM; all readings in volts. Voltages are measured with respect to chassis ground unless noted otherwise.

Waveforms shown are actual photographs taken with a TEKTRONIX Oscilloscope Camera System. Test oscilloscope deflection factor and sweep rate conditions are noted on each waveform. DC coupling was used to obtain the DC levels that are recorded at the right side of each waveform. These DC levels are located with respect to the graticule rather than to the waveform. To indicate time relationship between signals, the test oscilloscope was triggered externally, where possible. The triggering source, except where noted, was the 144 VERT DRIVE output; triggering was adjusted to display lines 19, 20, and 21 of Field 2 on the delayed sweep.

Voltages and Waveforms on the diagram (shown in blue) are not absolute and may vary between instruments because of differing component tolerances, internal calibration, etc.

The test oscilloscope used for obtaining the waveform photographs had the following minimum characteristics: Deflection factor, 1 mV/DIV (10 mV/DIV with a 10X probe); frequency response, DC to 10 MHz; sweep rates, 0.05 μs/DIV to 5 ms/DIV; and delayed Sweep capability. (Delayed and delaying sweeps are displayed. The DELAY TIME MULTIPLIER, DTM, setting is noted on each waveform.)

WARNING

"Coaxial shields and ground lugs" are not always at ground potential. Check the diagram before using such connections as a ground for the VOM or test oscilloscope probe.

A TEKTRONIX Type 144 NTSC TEST SIGNAL GENERATOR was used to provide an external 1 volt peak to peak composite video signal to the 1430 PROGRAM IN.

Unless noted otherwise on each diagram, the 1430 switches were set as follows:

POWER	ON
PROGRAM CHANNEL	ON
MONITORING CHANNEL:	
NOISE MEASUREMENT MODE	VITS
FIELD	2
LINE	20
PEDESTAL:	
DELAY	Midrange
LEVEL	Midrange
IRE	50
GAIN	CAL
WEIGHTING FILTER	OUT
NOISE LEVEL	−20 dB

The 1430 OUTPUTS were terminated with 75 Ω.

POWER SUPPLY

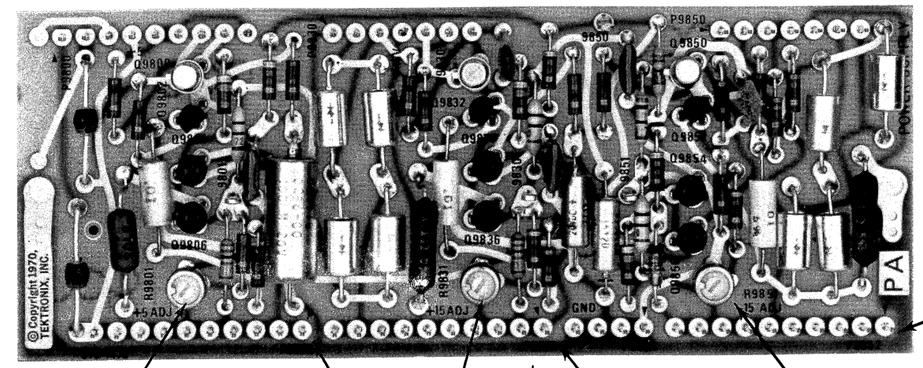

AMPLIFIER

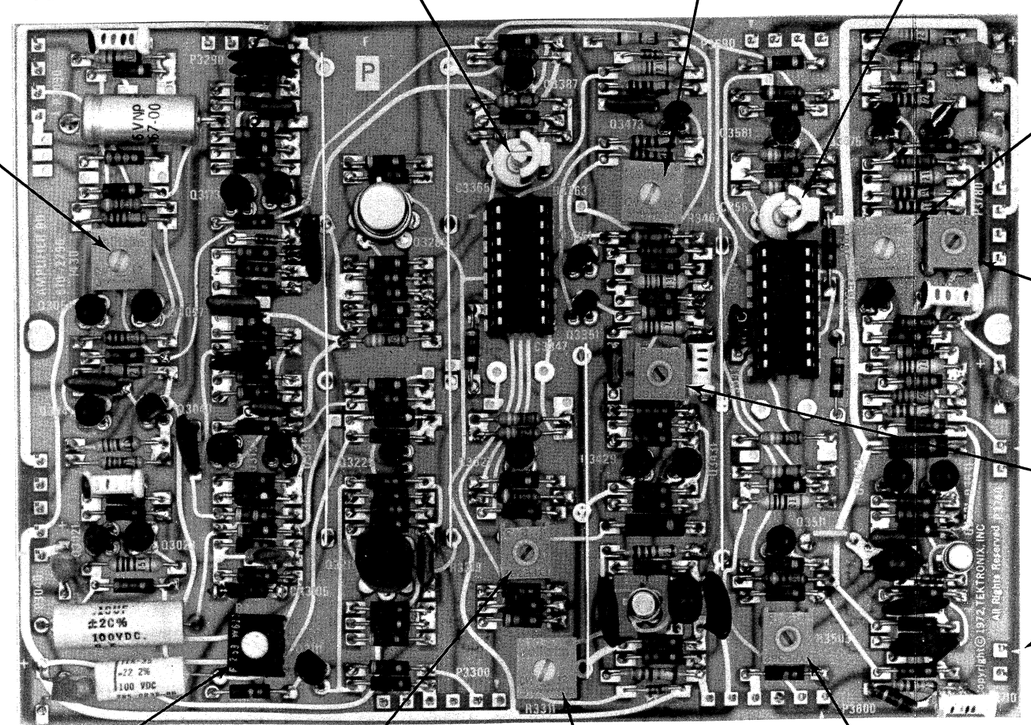

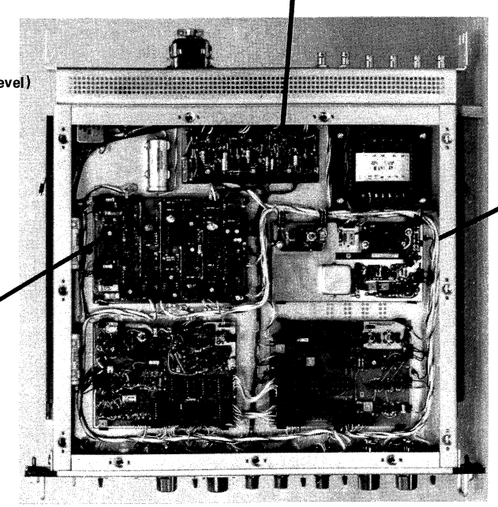

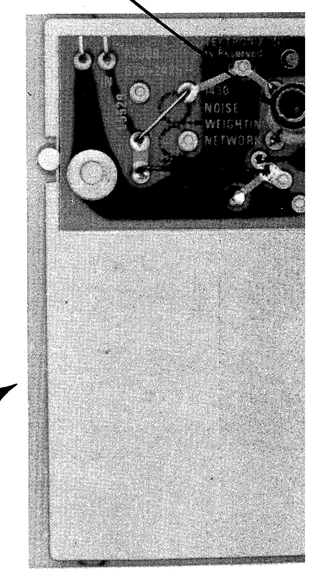

POWER SUPPLY

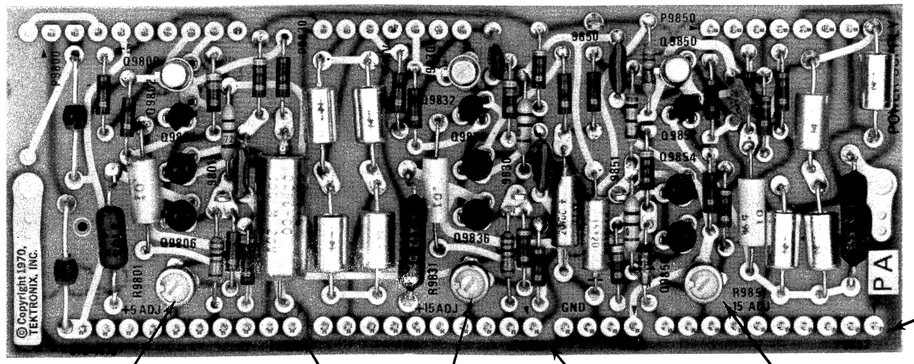

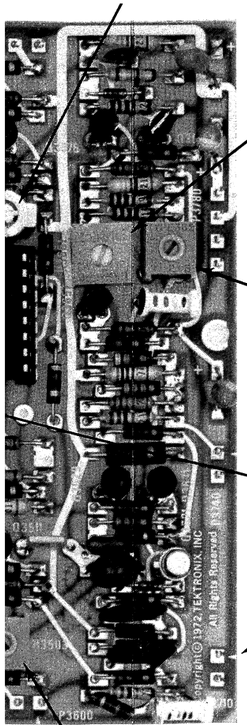

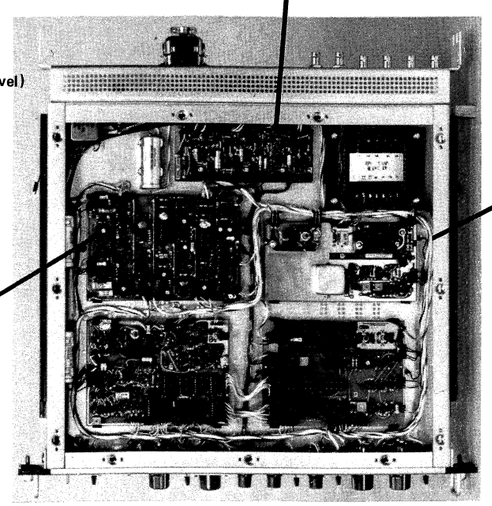

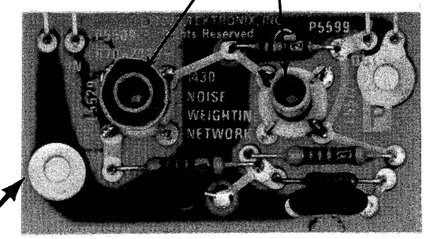

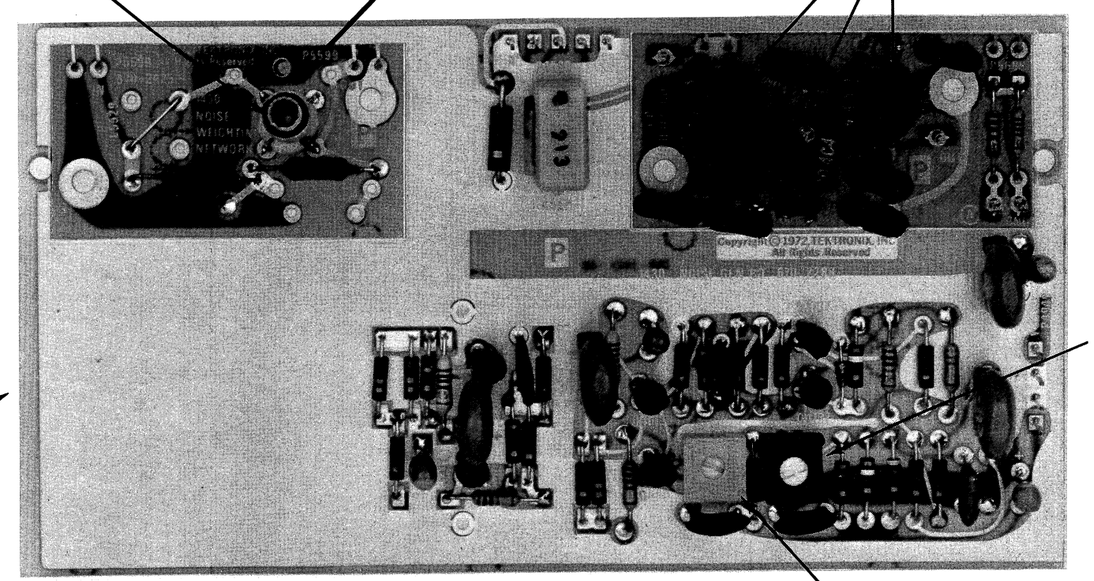

NOISE GENERATOR

POWER SUPPLY

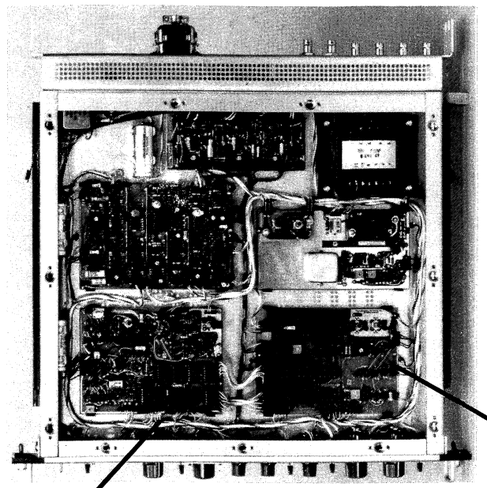

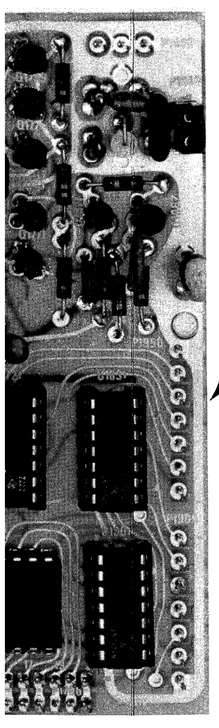

TIMING

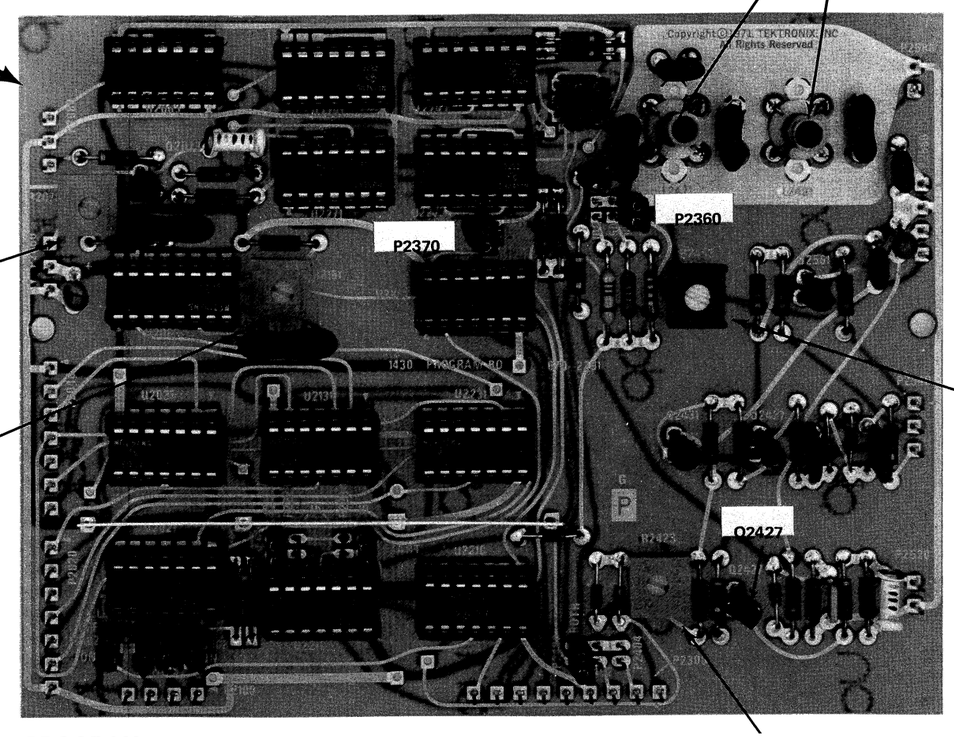

PROGRAM

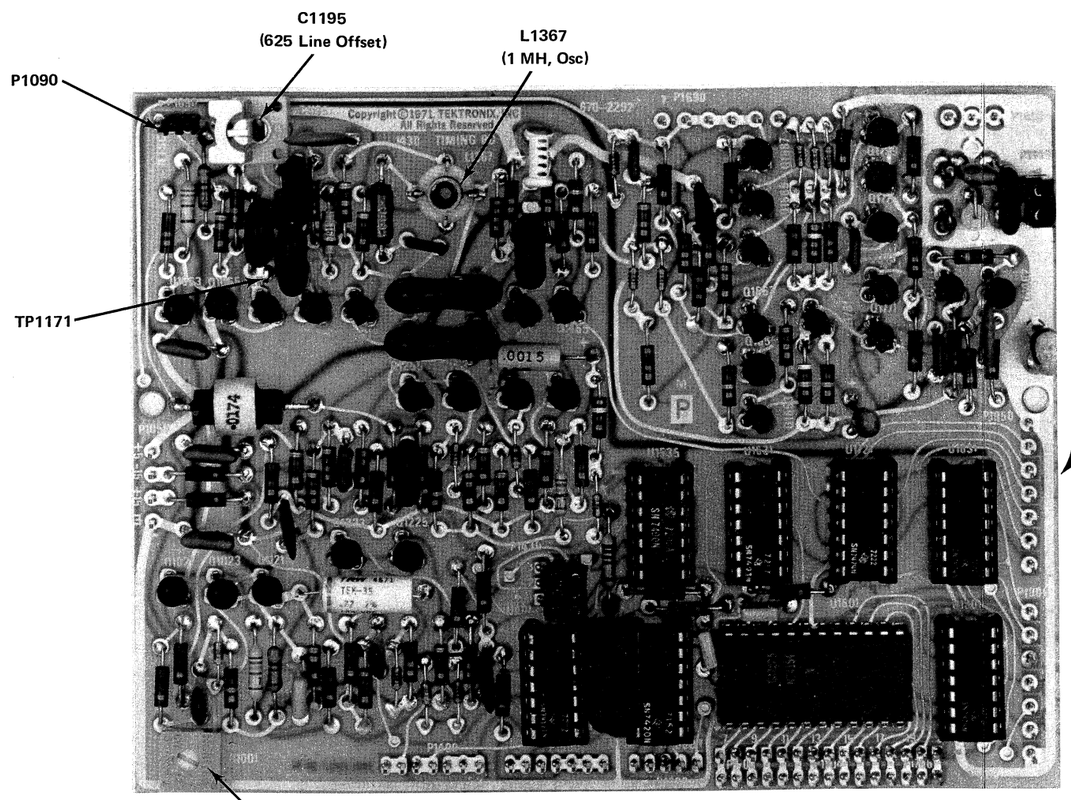

TIMING

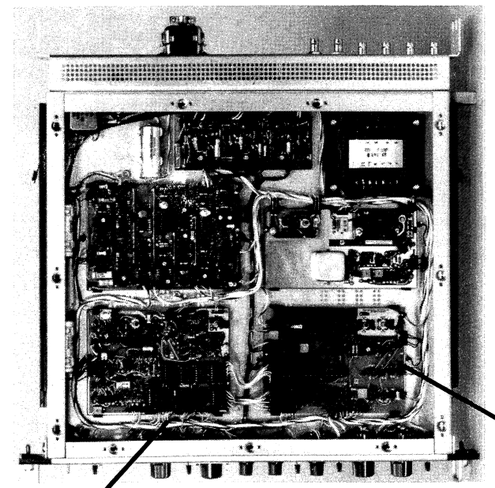

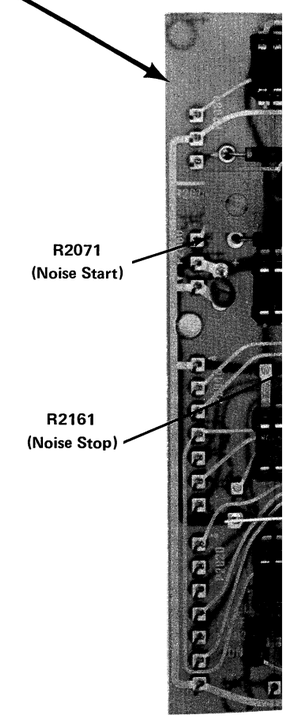

PROGRAM

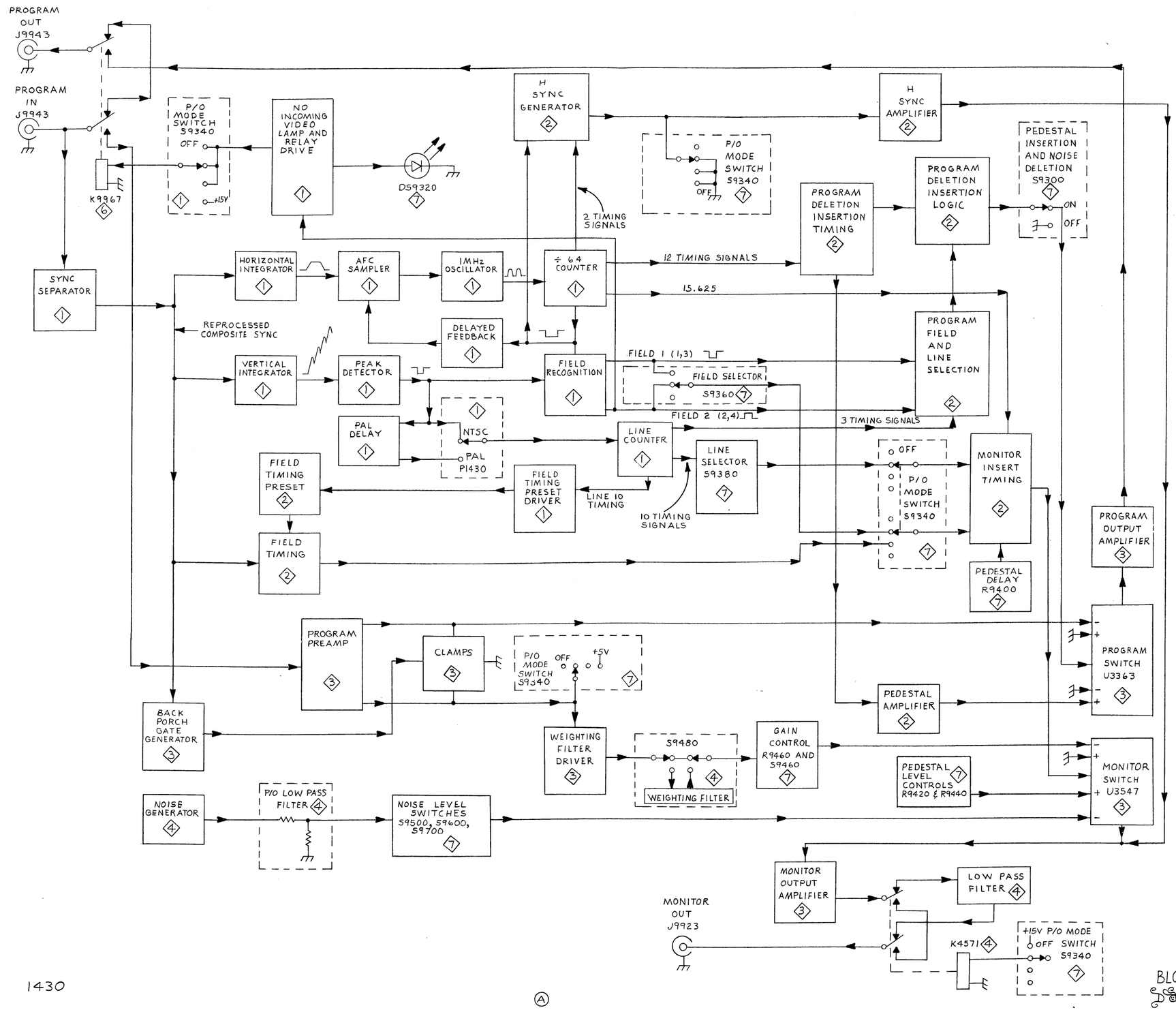

1430

Ⓐ

BLOCK DIAGRAM

7-6-72

BLOCK DIAGRAM

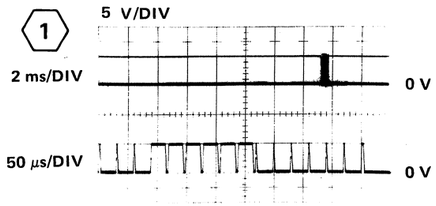

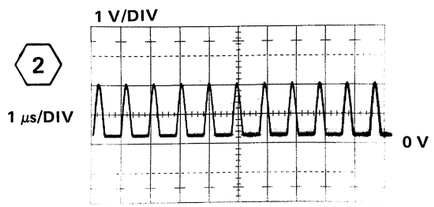

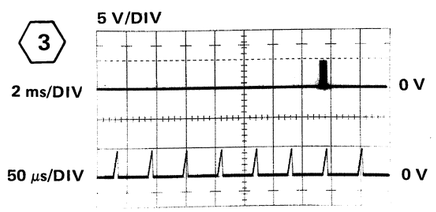

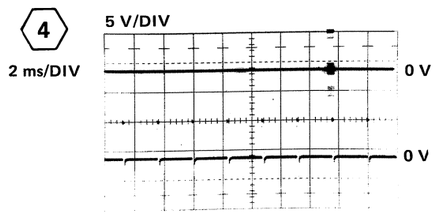

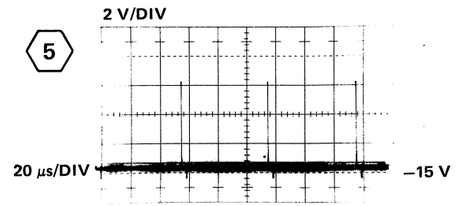

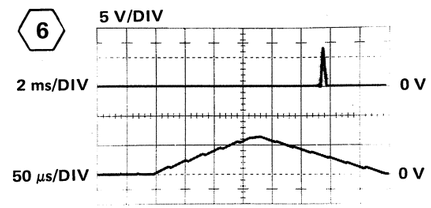

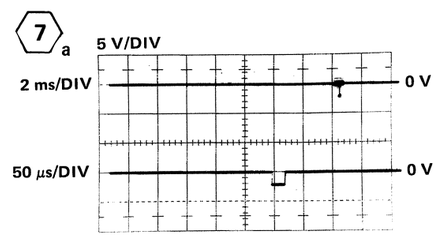

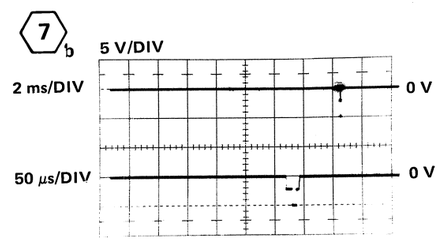

Voltages and Waveforms obtained under conditions given on back side of Section 6 Title page except: Waveforms 2 and 5 test oscilloscope internally triggered; and waveform 7b triggered to display lines 19, 20 & 21 of Field 2.

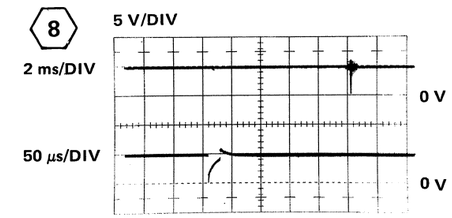

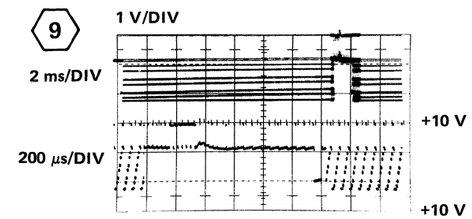

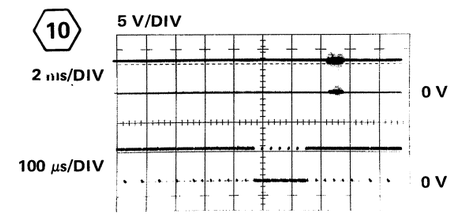

NOTES:
1. SEE PARTS LIST FOR SEMICONDUCTOR TYPES.
2. IC's; 7400N, 7420N 7474N, 74121, PIN 7 GND, & PIN 14 + 5V.
   7493N, PIN 10 GND, PIN 5 +5V; PINS 4, 6, 7 & 13 UNUSED.
3. CIRCUIT NUMBERS 1000–1999

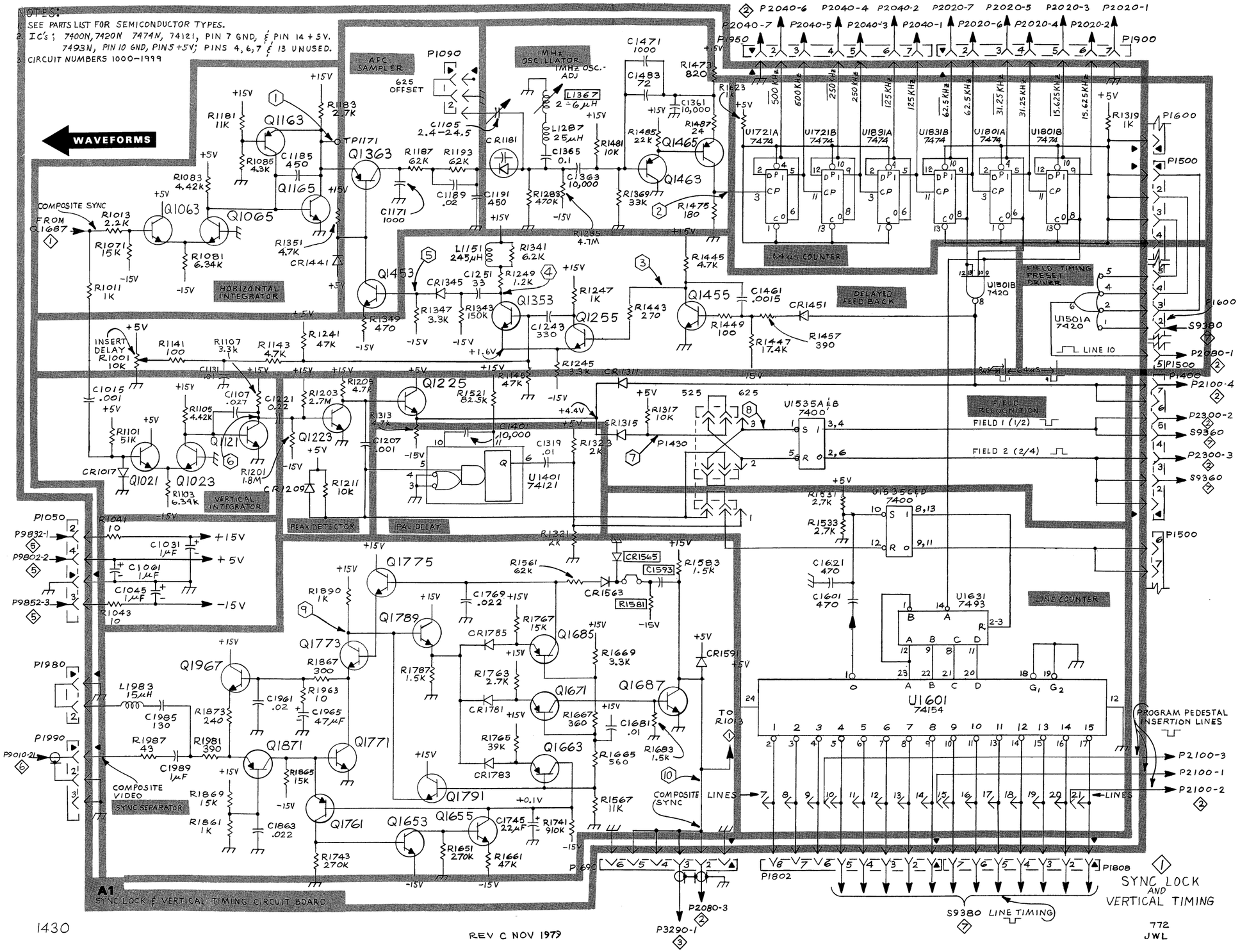

1430

REV C NOV 1979

772
JWL

SYNC LOCK & VERTICAL TIMING

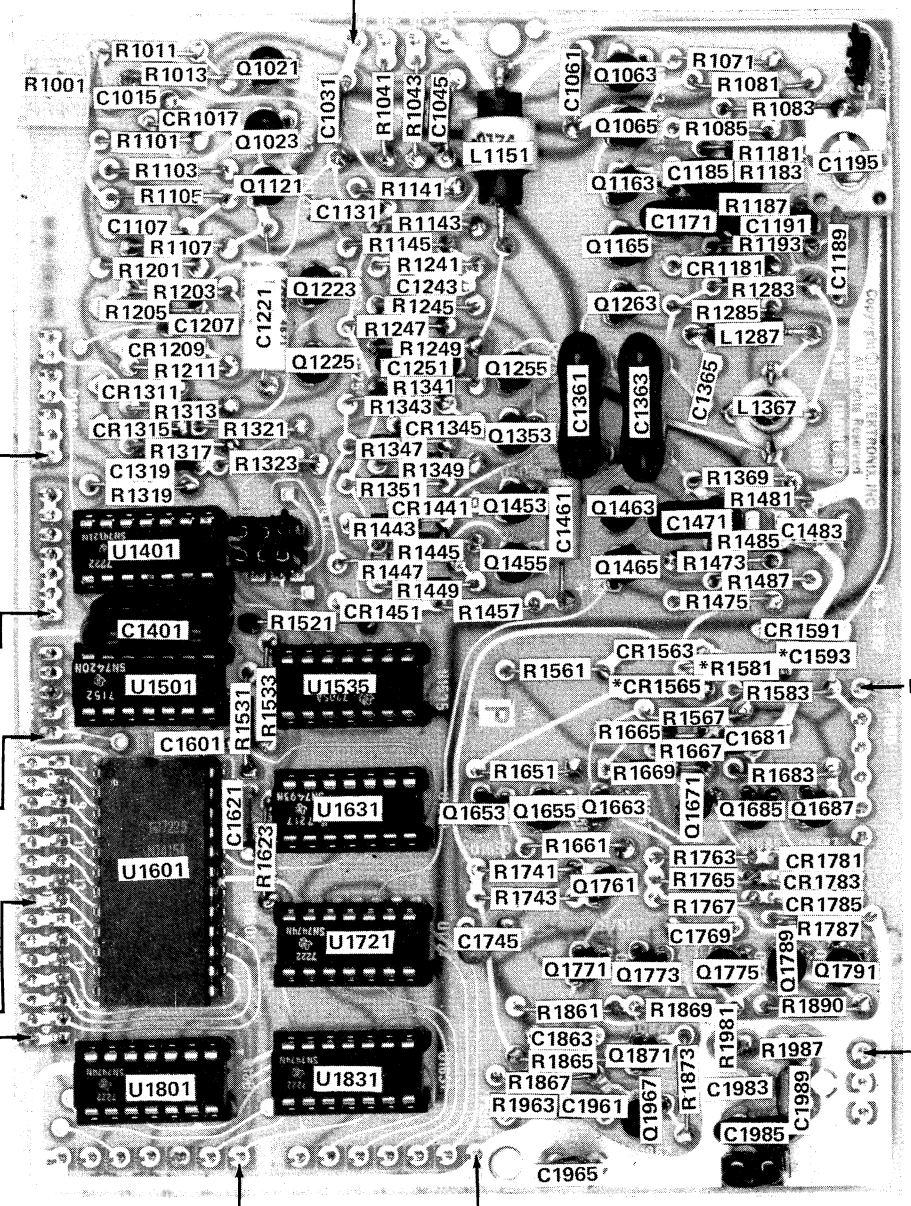

*See Parts List for serial number ranges.

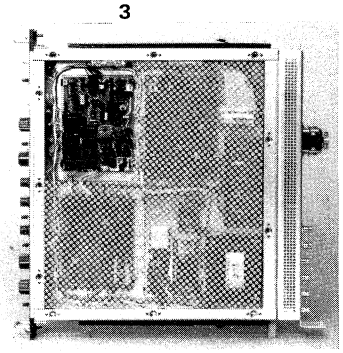

A1–TIMING CIRCUIT BOARD

P2040-1 vio on wht
2 blu on wht
3 grn on wht
4 yel on wht
5 orn on wht
6 red on wht
7 brn on wht

P2020-1 vio on wht
2 blu on wht
3 grn on wht
4 yel on wht
5 orn on wht
6 red on wht
7 brn on wht

P2060-1 blk
2 blk on red
3 blk on wht

P2080-1 blk-orn on wht
2 shield for 3
3 blk on wht coax

4 blu on wht
3 blk-brn-blu on wht
2 blk-grn on wht
P2100-1 blk-yel on wht

10
9 red-grn on wht
8 red-orn on wht
7 gry on wht
6 vio on wht
5 red on wht coax
4 shield for 5
3 red on wht
2 yel on wht
P2300-1 brn-red on wht

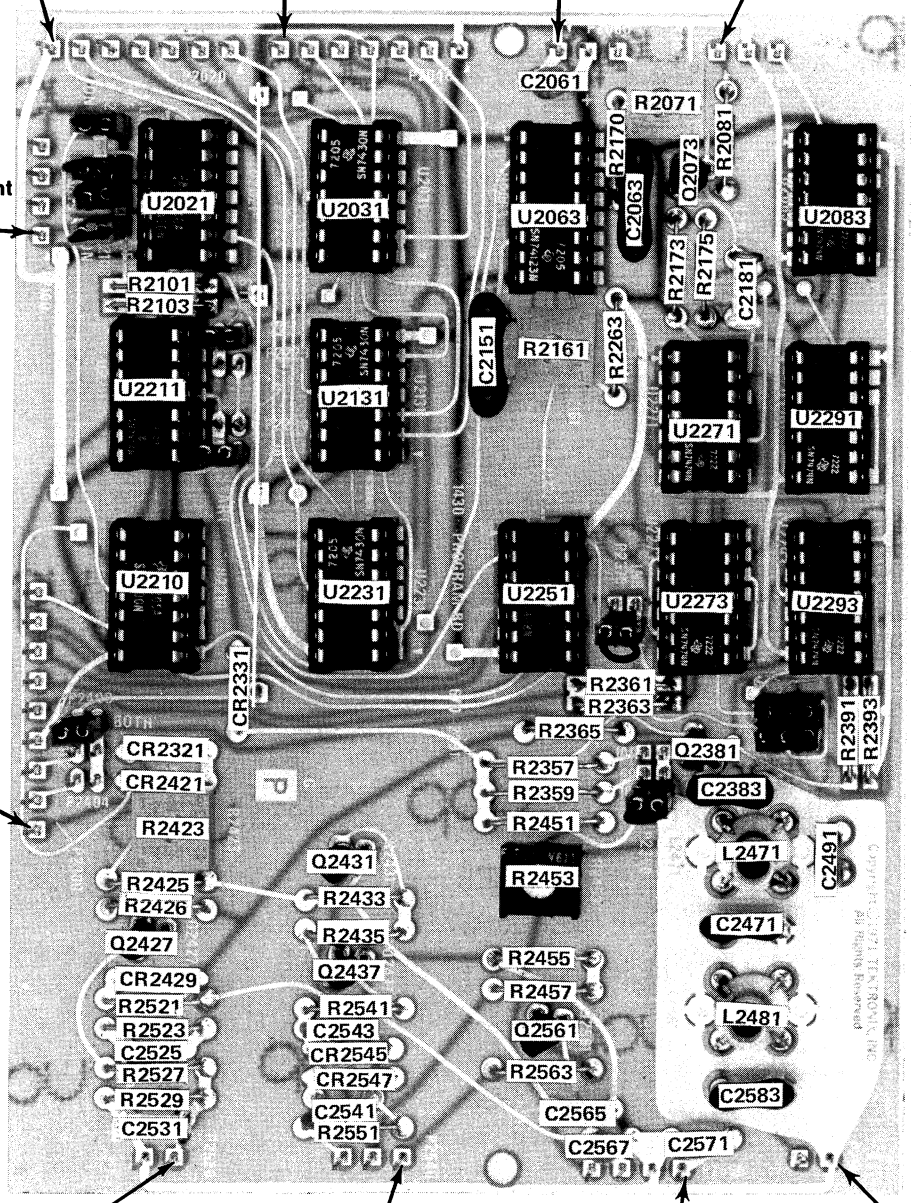

P2520-1 orn on wht coax
2 shield for 1

P2540-1 brn
2 orn-yel on wht
3 brn-orn on wht

P2560-1 blk on vio
2 blk
3 blk on red
4 brn on red

P2580-1 shield for 2
2 yel on wht coax

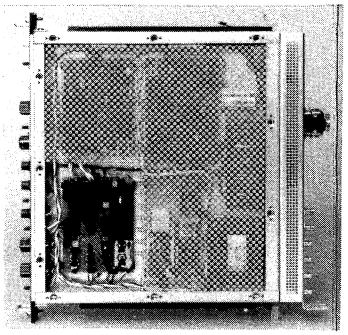

A2-PROGRAM CIRCUIT BOARD

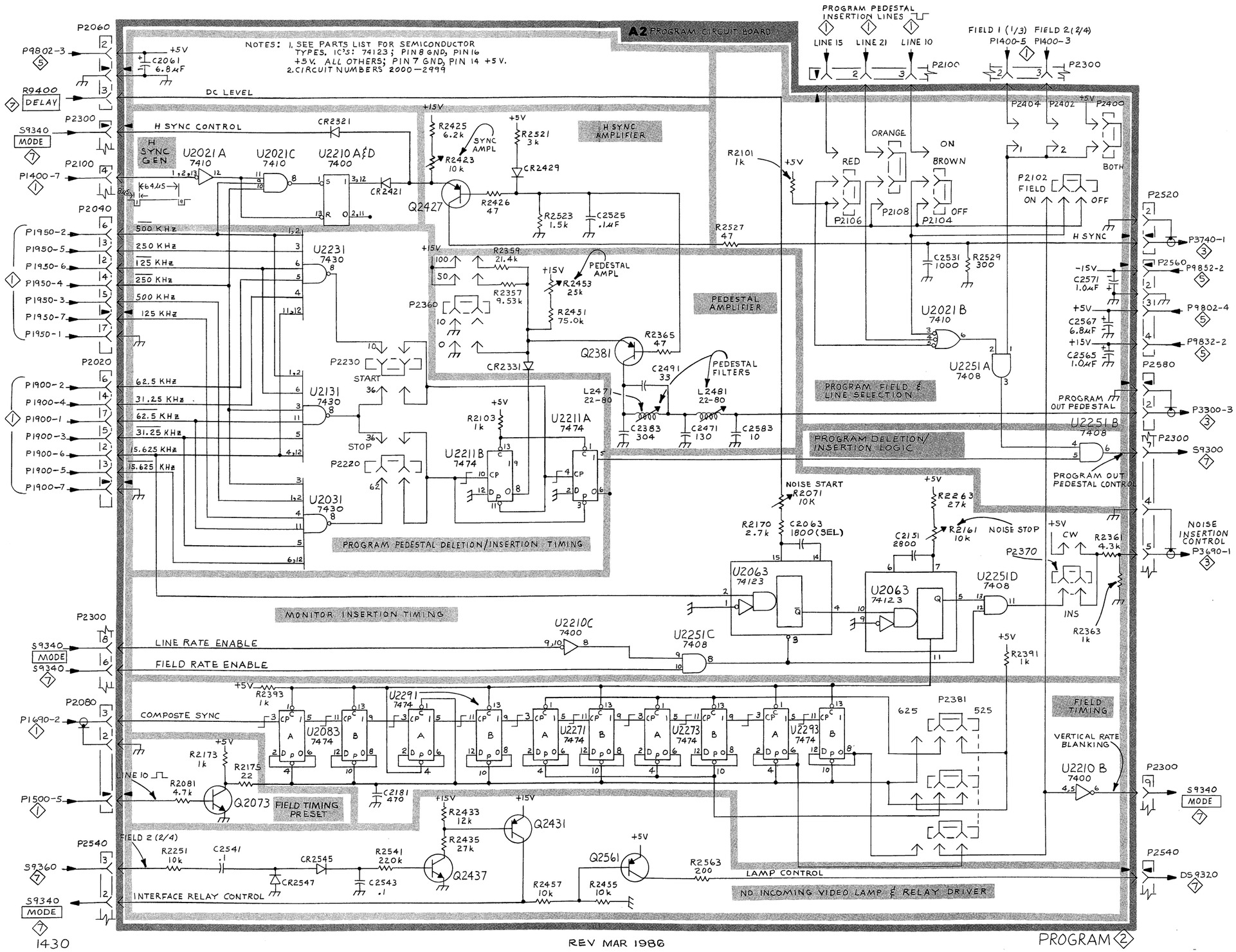
A2 PROGRAM CIRCUIT BOARD
NOTES: 1. SEE PARTS LIST FOR SEMICONDUCTOR TYPES. IC'S: 74123; PIN 8 GND, PIN 16 +5V. ALL OTHERS; PIN 7 GND, PIN 14 +5V.
2. CIRCUIT NUMBERS 2000–2999
PROGRAM PEDESTAL INSERTION LINES
LINE 15
LINE 21
LINE 10
FIELD 1 (1/3)
FIELD 2 (2/4)
P1400-5
P1400-3
P2100
P2300
P2060
P9802-3
R9400 DELAY
S9340 MODE
P1400-7
P2040
P1950-2
P1950-5
P1950-6
P1950-4
P1950-3
P1950-7
P1950-1
P2020
P1900-2
P1900-4
P1900-1
P1900-3
P1900-6
P1900-5
P1900-7
DC LEVEL
H SYNC CONTROL
H SYNC GEN
U2021A 7410
U2021C 7410
U2210A&D 7400
CR2321
CR2421
Q2427
R2425 6.2k
SYNC AMPL
R2423 10k
R2521 3k
CR2429
H SYNC AMPLIFIER
R2426 47
R2523 1.5k
C2525 .1µF
R2527 47
500 KHz
250 KHz
125 KHz
62.5 KHz
31.25 KHz
15.625 KHz
U2231 7430
U2131 7430
U2031 7430
P2230 START
P2220 STOP
R2359 21.4k
R2357 9.53k
P2360
PEDESTAL AMPL
R2453 25k
R2451 75.0k
Q2381
R2365 47
CR2331
PEDESTAL AMPLIFIER
C2491 33
PEDESTAL FILTERS
L2471 22-80
L2481 22-80
C2383 304
C2471 130
C2583 10
R2103 1k
U2211B 7474
U2211A 7474
PROGRAM PEDESTAL DELETION/INSERTION TIMING
R2101 1k
RED
ORANGE
ON
BROWN
OFF
P2106
P2108
P2104
P2404
P2402
P2400
BOTH
P2102 FIELD
ON
OFF
C2531 1000
R2529 300
U2021B 7410
U2251A 7408
PROGRAM FIELD & LINE SELECTION
PROGRAM DELETION/INSERTION LOGIC
NOISE START
R2071 10K
R2170 2.7k
C2063 1800(SEL)
R2263 27k
R2161 10k
NOISE STOP
C2151 2800
U2063 74123
U2251D 7408
U2251B 7408
PROGRAM OUT PEDESTAL
PROGRAM OUT PEDESTAL CONTROL
P2520
H SYNC
P3740-1
P2560
P9852-2
-15V
C2571 1.0µF
+5V
C2567 6.8µF
+15V
C2565 1.0µF
P9802-4
P9832-2
P2580
P3300-3
P2300
S9300
NOISE INSERTION CONTROL
P3690-1
CW
R2361 4.3k
P2370
INS
R2363 1k
R2391 1k
U2210C 7400
U2251C 7408
LINE RATE ENABLE
FIELD RATE ENABLE
MONITOR INSERTION TIMING
P2080
P1690-2
COMPOSITE SYNC
R2393 1k
U2083 7474
U2291 7474
U2271 7474
U2273 7474
U2293 7474
P2381
625
525
FIELD TIMING
VERTICAL RATE BLANKING
U2210 B 7400
P1500-5
LINE 10
R2173 1k
R2175 22
R2081 4.7k
Q2073
FIELD TIMING PRESET
C2181 470
R2433 12k
R2435 27k
Q2431
Q2437
P2540
FIELD 2 (2/4)
R2251 10k
C2541 .1
CR2545
CR2547
R2541 220k
C2543 .1
INTERFACE RELAY CONTROL
Q2561
R2563 200
R2457 10k
R2455 10k
LAMP CONTROL
NO INCOMING VIDEO LAMP & RELAY DRIVER
DS9320

1

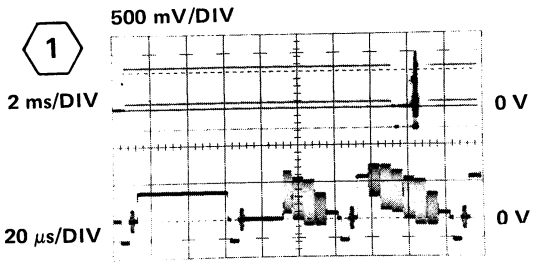

2

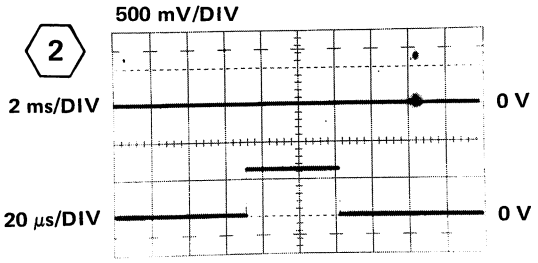

3

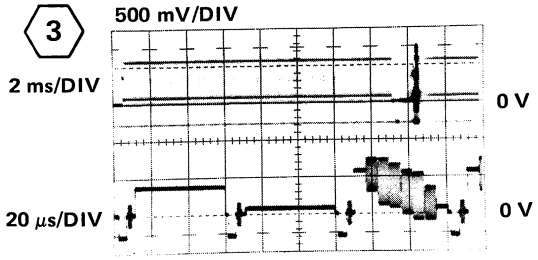

4

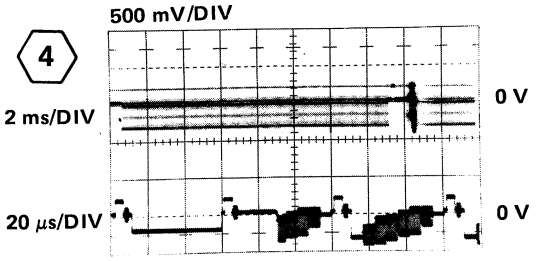

5

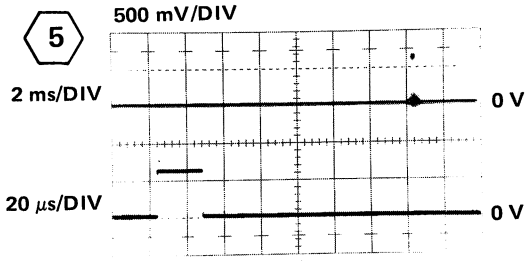

6

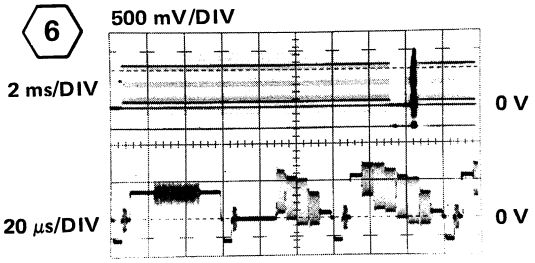

7

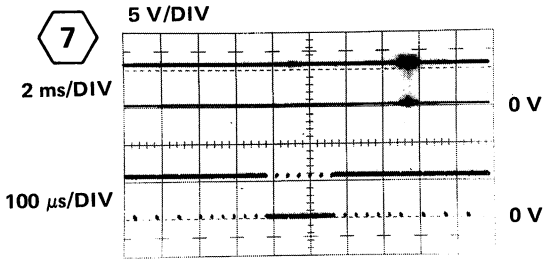

8

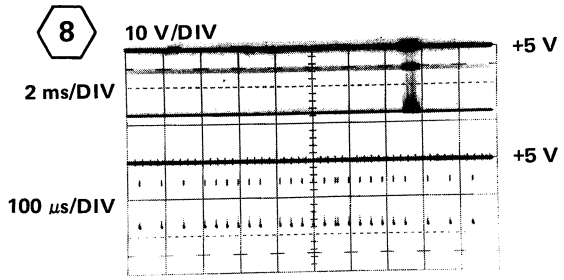

Voltages and Waveforms obtained under conditions given on back side of Section 7 Title page.

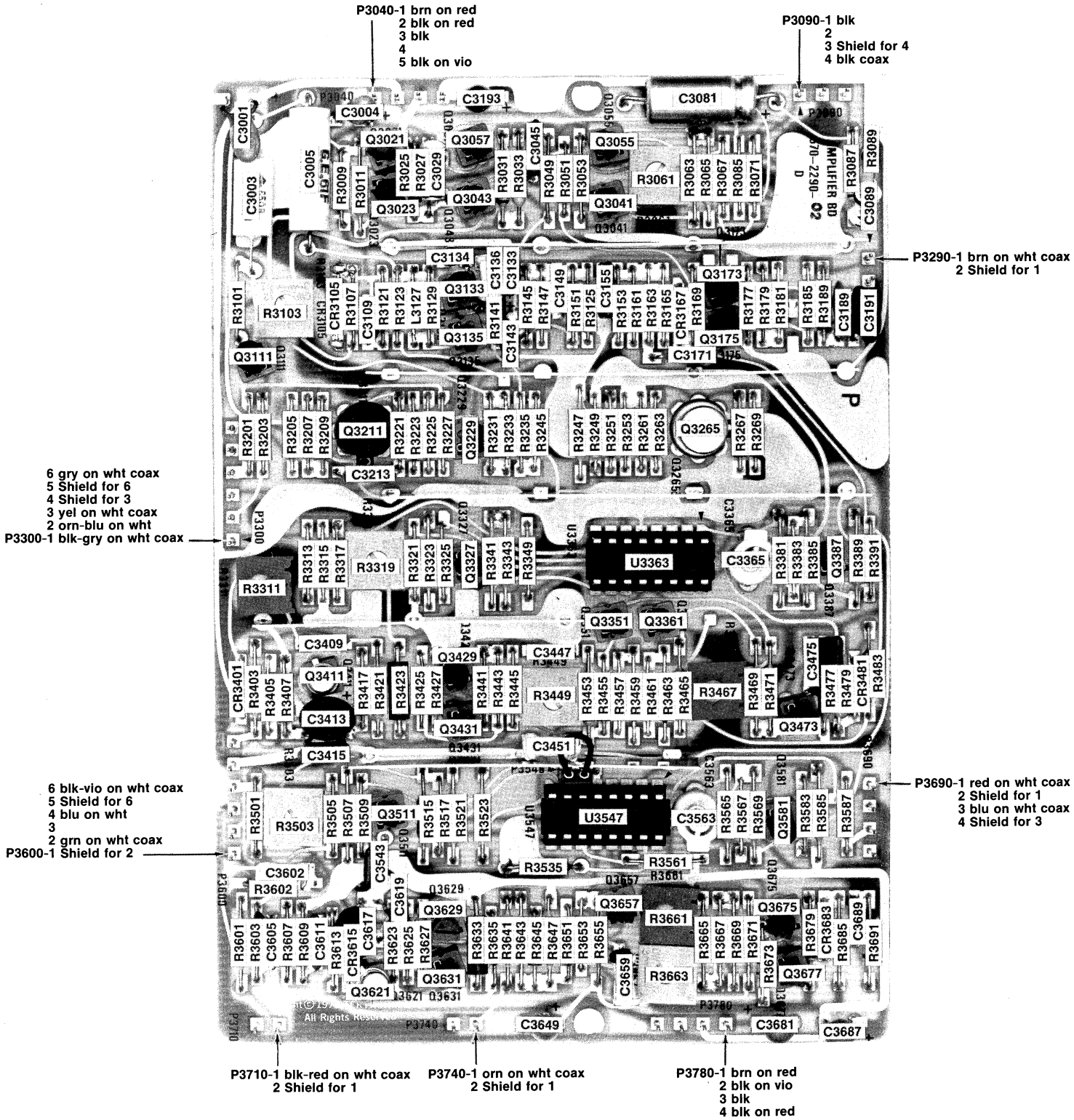

A3—AMPLIFIER CIRCUIT BOARD

SN B060000 & up

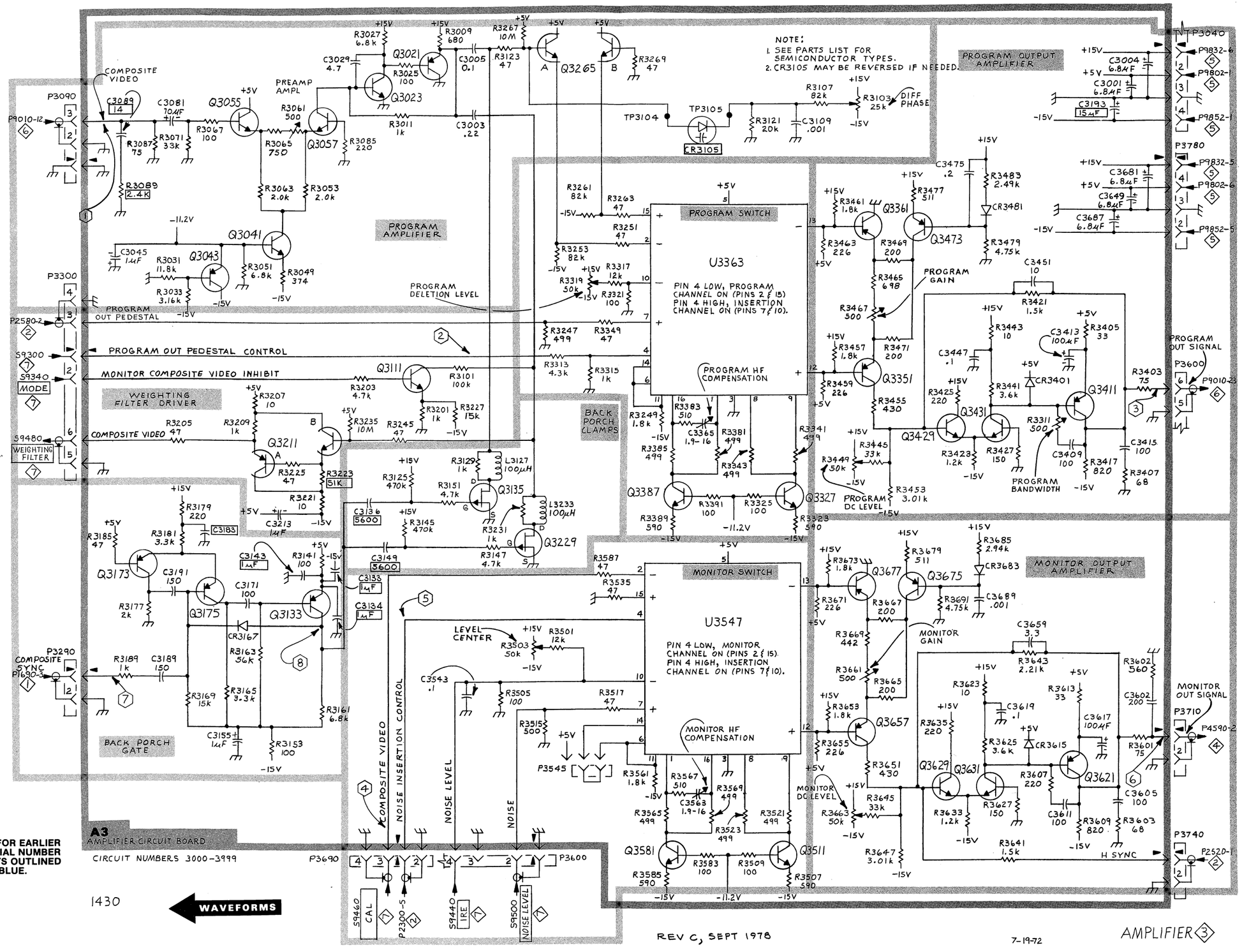
NOTE:
1. SEE PARTS LIST FOR SEMICONDUCTOR TYPES.
2. CR3105 MAY BE REVERSED IF NEEDED.
PROGRAM OUTPUT AMPLIFIER
PROGRAM AMPLIFIER
PROGRAM SWITCH
U3363
PIN 4 LOW, PROGRAM CHANNEL ON (PINS 2 & 15)
PIN 4 HIGH, INSERTION CHANNEL ON (PINS 7 & 10).
PROGRAM HF COMPENSATION
PROGRAM GAIN
PROGRAM BANDWIDTH
PROGRAM DC LEVEL
PROGRAM DELETION LEVEL
PROGRAM OUT PEDESTAL
PROGRAM OUT PEDESTAL CONTROL
MONITOR COMPOSITE VIDEO INHIBIT
COMPOSITE VIDEO
WEIGHTING FILTER DRIVER
WEIGHTING FILTER
MODE
BACK PORCH CLAMPS
BACK PORCH GATE
PREAMP AMPL
MONITOR SWITCH
U3547
PIN 4 LOW, MONITOR CHANNEL ON (PINS 2 & 15).
PIN 4 HIGH, INSERTION CHANNEL ON (PINS 7 & 10).
MONITOR HF COMPENSATION
MONITOR GAIN
MONITOR DC LEVEL
MONITOR OUTPUT AMPLIFIER
LEVEL CENTER
COMPOSITE SYNC
COMPOSITE VIDEO
NOISE INSERTION CONTROL
NOISE LEVEL
NOISE
PROGRAM OUT SIGNAL
MONITOR OUT SIGNAL
H SYNC
DIFF PHASE
CAL
IRE
NOISE LEVEL
A3
AMPLIFIER CIRCUIT BOARD
CIRCUIT NUMBERS 3000-3999
SEE PARTS LIST FOR EARLIER VALUES AND SERIAL NUMBER RANGES OF PARTS OUTLINED OR DEPICTED IN BLUE.
1430
WAVEFORMS
REV C, SEPT 1978
7-19-72
AMPLIFIER 3

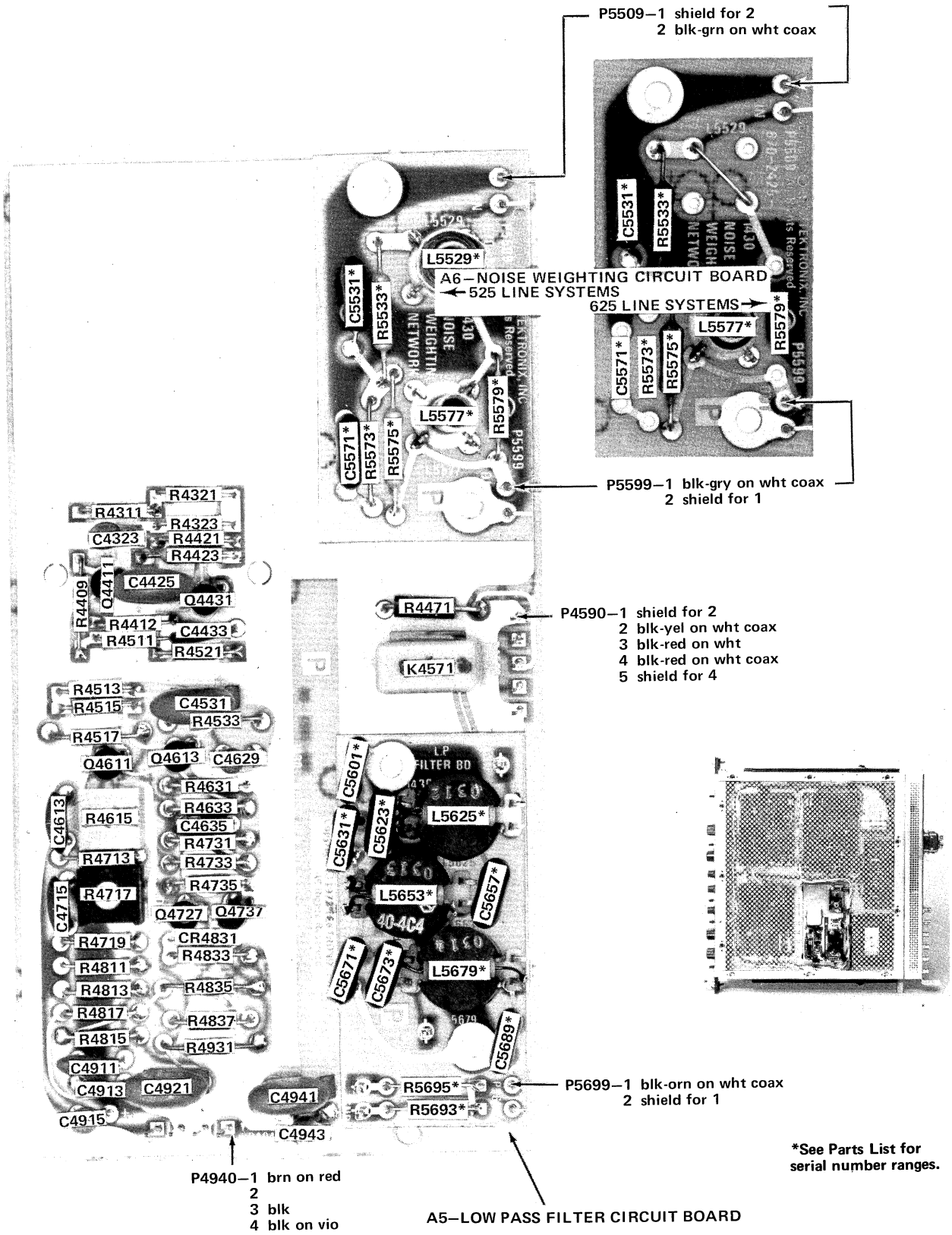

*See Parts List for serial number ranges.

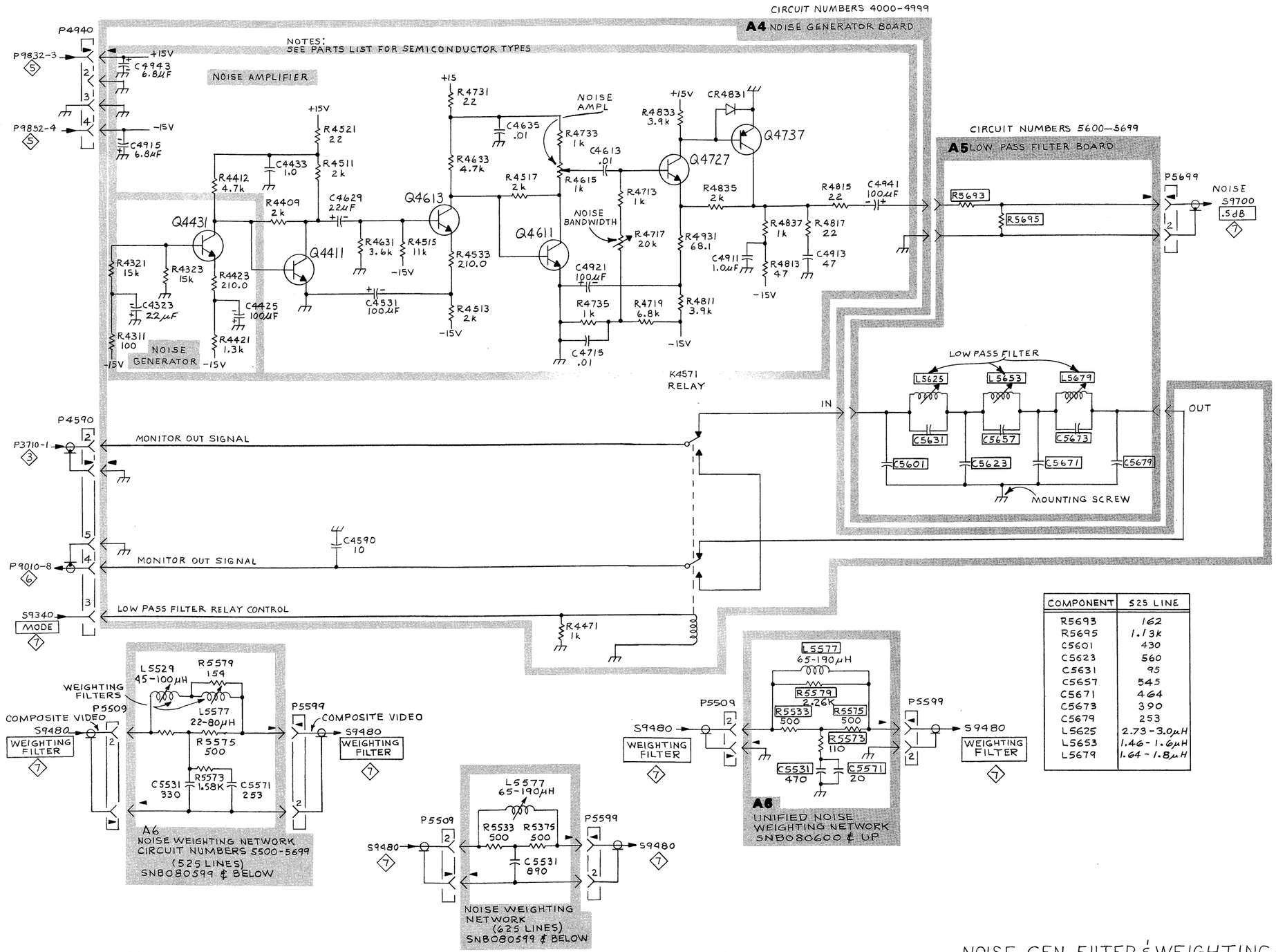

COMPONENT	525 LINE
R5693	162
R5695	1.13k
C5601	430
C5623	560
C5631	95
C5657	545
C5671	464
C5673	390
C5679	253
L5625	2.73-3.0µH
L5653	1.46-1.6µH
L5679	1.64-1.8µH

REV B DEC1980

NOISE GEN, FILTER & WEIGHTING 4

7-24-72

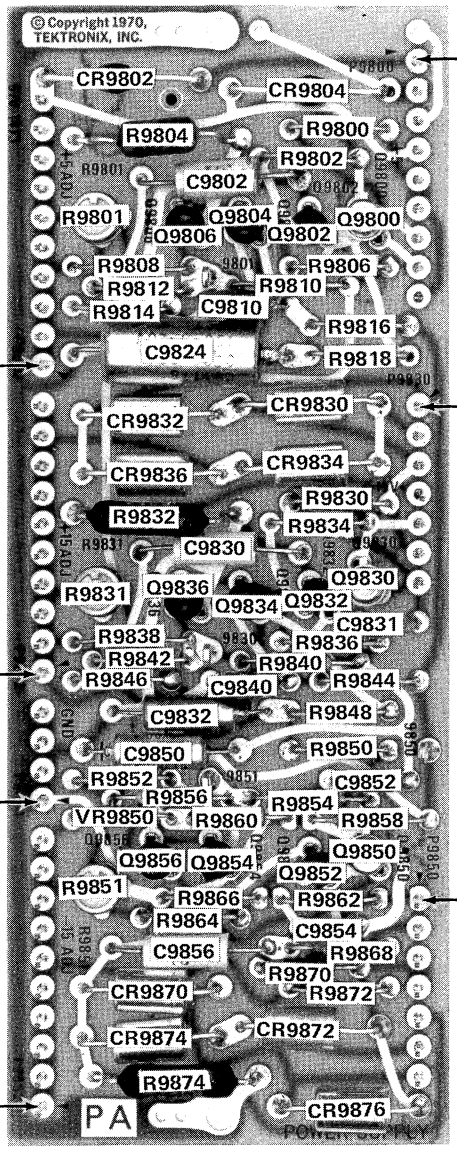

P9800—1 blk-blu on gry
2 brn on gry
3
4 red on wht
5 blk-vio on gry
6 brn on wht
7 blk on red
8 blk-brn on red
9 blk-orn on red

10
9
8
6 blk on red
5 blk on red
4 blk on red
3 blk on red
2 blk on red
P9802—1 blk on red

P9830—1 wht on gry
2 blk-brn on gry
3 orn on wht
4 yel on wht
5 brn on red
6 brn-yel on red
7 brn-orn on red

10
9
8
7
6 brn on red
5 brn on red
4 brn on red
3 brn on red
2 brn on red
P9832—1 brn on red

4
3
2
P9834—1 blk

P9850-1 blk-brn on vio
2 blk on vio
3 blk-red on vio
4 grn on wht
5 blu on wht
6 blk-red on gry
7 blk-grn on gry

10
9
8
7
6 blk on vio
5 blk on vio
4 blk on vio
3 blk on vio
2 blk on vio
P9852—1 blk on vio

CHASSIS MOUNTED PARTS

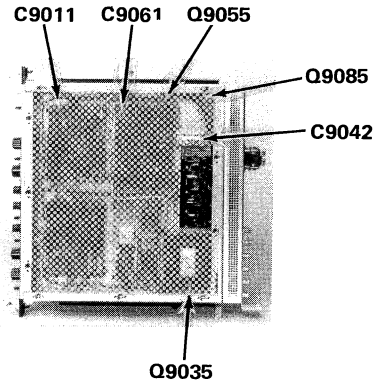

A7—POWER SUPPLY CIRCUIT BOARD

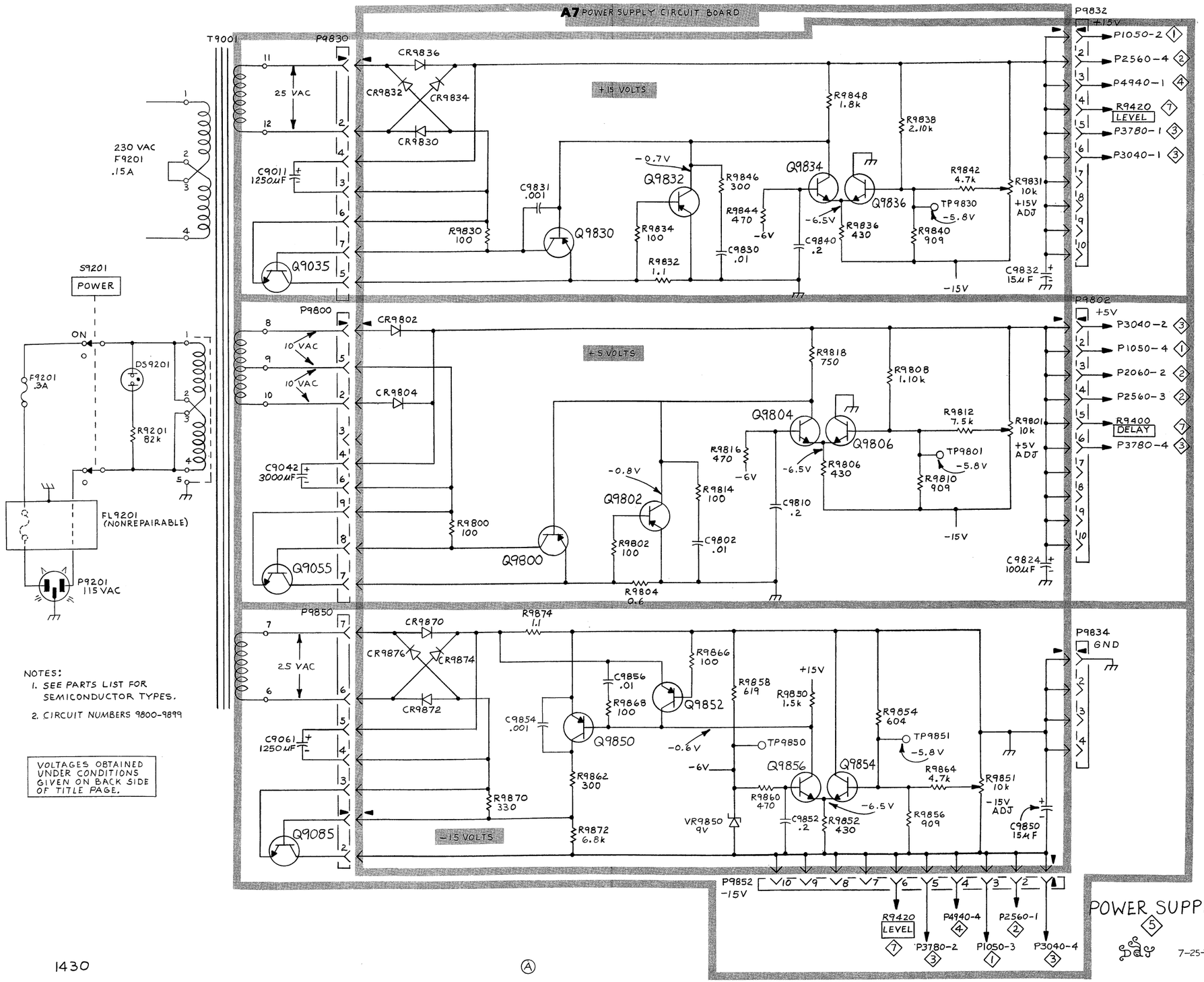

NOTES:
1. SEE PARTS LIST FOR SEMICONDUCTOR TYPES.
2. CIRCUIT NUMBERS 9800-9899

VOLTAGES OBTAINED UNDER CONDITIONS GIVEN ON BACK SIDE OF TITLE PAGE.

POWER SUPPLY 5

7-25-72

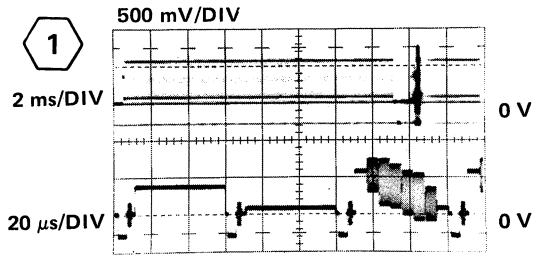

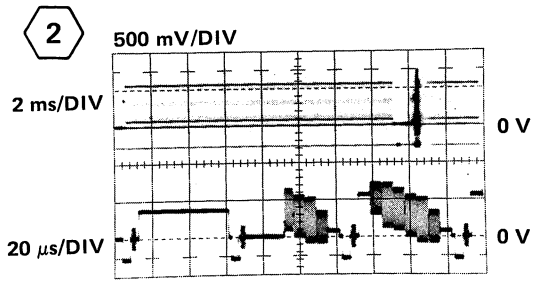

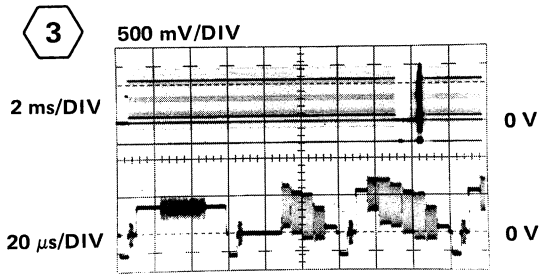

Voltages and Waveforms obtained under conditions given on back side of Section 7 Title page.

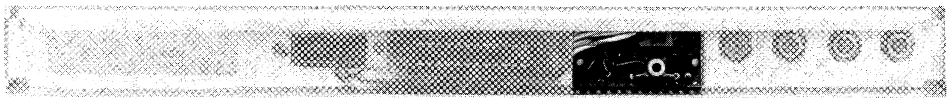

P9919–
1 shield for 2
2 brn on wht coax
3 brn on wht
4
5 blu on wht
6 shield for 7
7 orn on wht coax

P9999–
1 red on wht coax
2 shield for 1

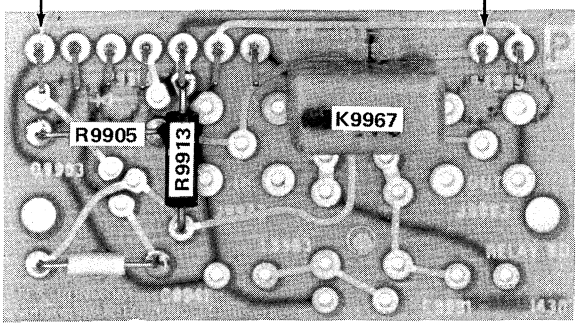

A8–RELAY CIRCUIT BOARD

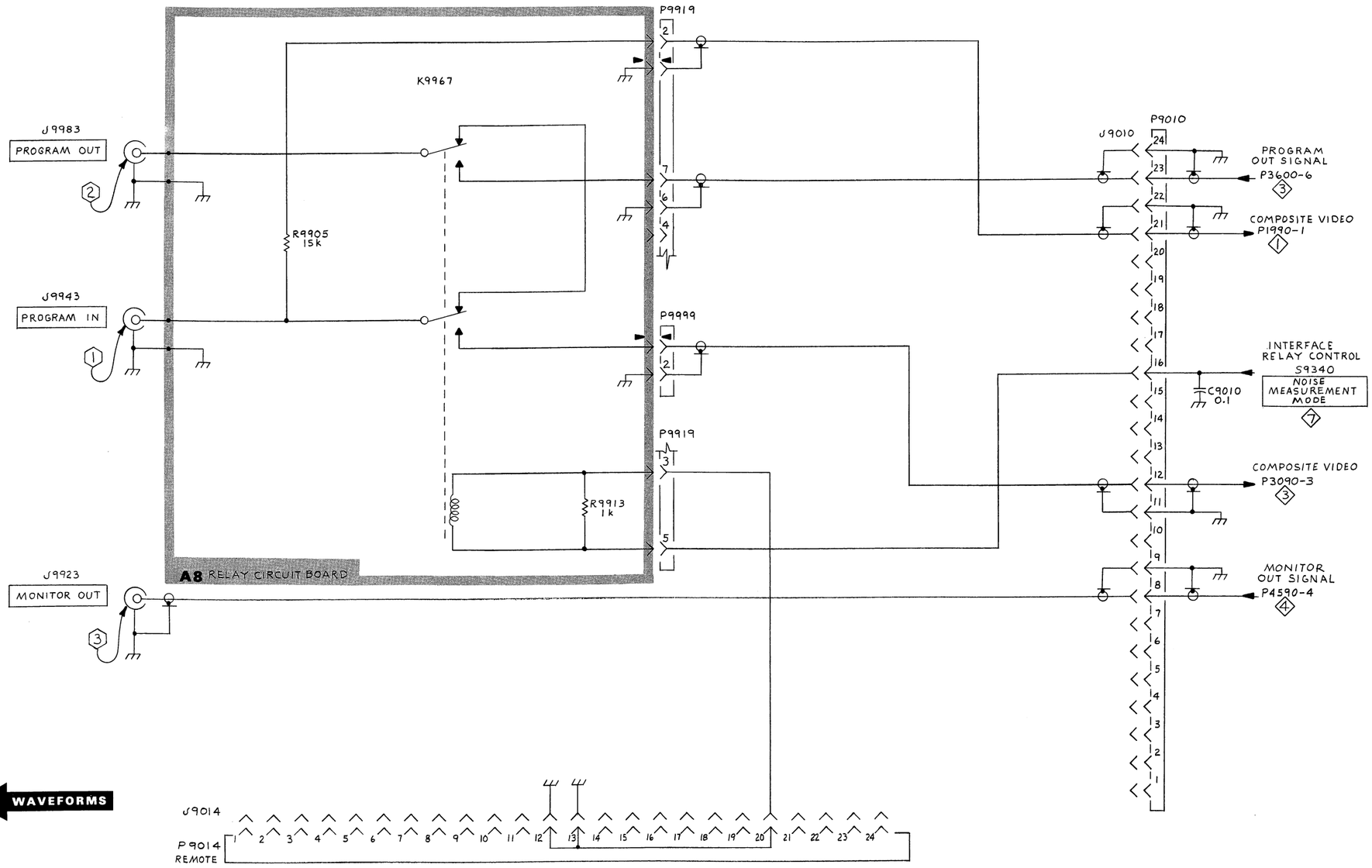
P9919
K9967
J9983
PROGRAM OUT
R9905
15k
J9943
PROGRAM IN
P9999
P9919
R9913
1k
A8 RELAY CIRCUIT BOARD
J9923
MONITOR OUT
J9010
P9010
PROGRAM
OUT SIGNAL
P3600-6
COMPOSITE VIDEO
P1990-1
INTERFACE
RELAY CONTROL
S9340
NOISE
MEASUREMENT
MODE
C9010
0.1
COMPOSITE VIDEO
P3090-3
MONITOR
OUT SIGNAL
P4590-4
WAVEFORMS
J9014
P9014
REMOTE

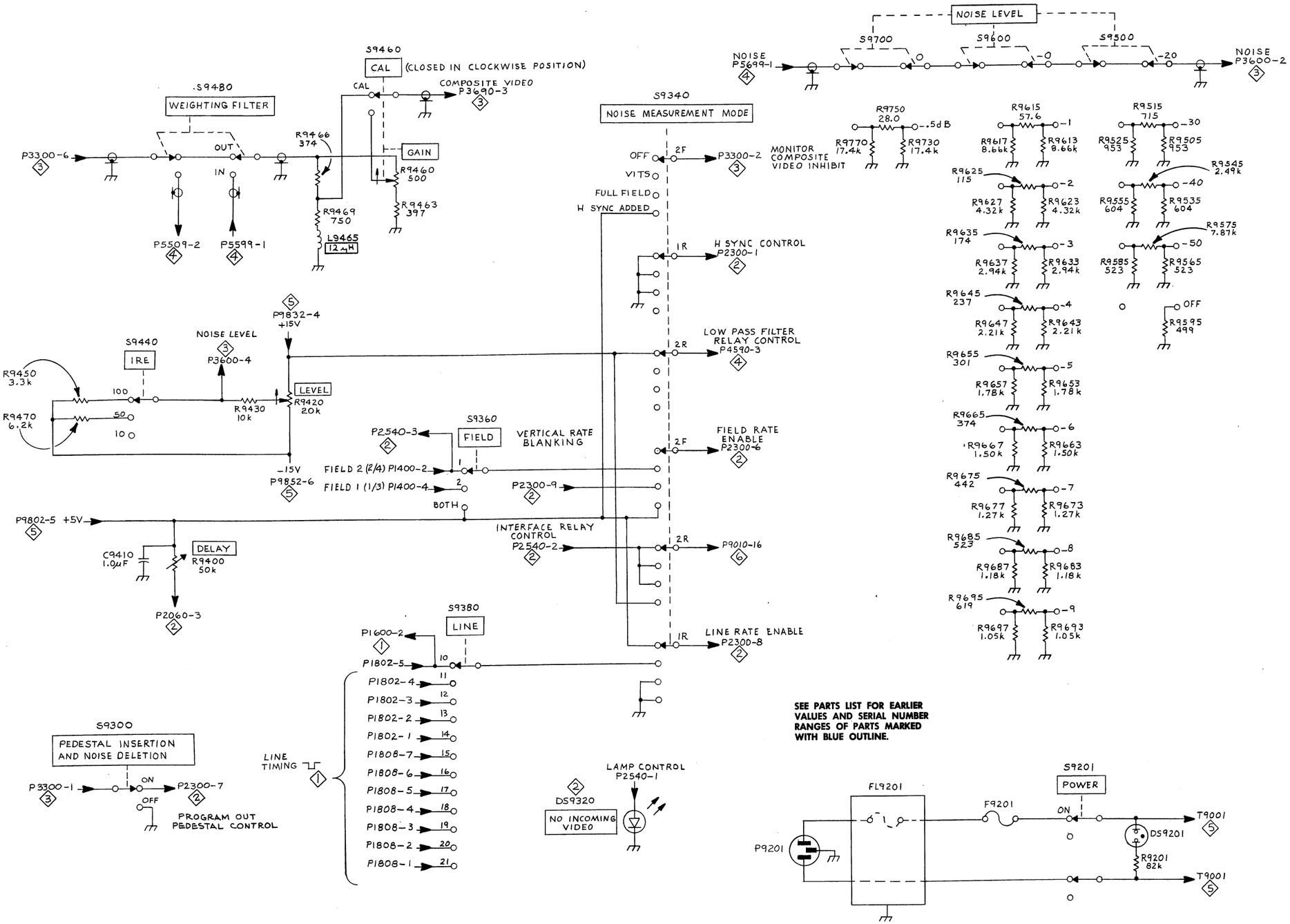
S9460
CAL
(CLOSED IN CLOCKWISE POSITION)
CAL
COMPOSITE VIDEO
P3690-3
S9480
WEIGHTING FILTER
P3300-6
OUT
IN
R9466
374
GAIN
R9460
500
R9463
397
R9469
750
L9465
12μH
P5509-2
P5599-1
S9340
NOISE MEASUREMENT MODE
OFF
VITS
FULL FIELD
H SYNC ADDED
2F
P3300-2
MONITOR COMPOSITE VIDEO INHIBIT
1R
H SYNC CONTROL
P2300-1
NOISE LEVEL
S9700
S9600
S9500
NOISE
P5699-1
NOISE
P3600-2
R9750
28.0
-.5dB
R9770
17.4k
R9730
17.4k
R9615
57.6
R9617
8.66k
R9613
8.66k
R9515
715
R9525
953
R9505
953
R9625
115
R9627
4.32k
R9623
4.32k
R9545
2.49k
R9555
604
R9535
604
R9635
174
R9637
2.94k
R9633
2.94k
R9575
7.87k
R9585
523
R9565
523
R9645
237
R9647
2.21k
R9643
2.21k
OFF
R9595
499
R9655
301
R9657
1.78k
R9653
1.78k
R9665
374
R9667
1.50k
R9663
1.50k
R9675
442
R9677
1.27k
R9673
1.27k
R9685
523
R9687
1.18k
R9683
1.18k
R9695
619
R9697
1.05k
R9693
1.05k
P9832-4
+15V
S9440
IRE
NOISE LEVEL
P3600-4
R9450
3.3k
R9470
6.2k
100
50
10
R9430
10k
LEVEL
R9420
20k
-15V
P9852-6
2R
LOW PASS FILTER RELAY CONTROL
P4590-3
S9360
FIELD
VERTICAL RATE BLANKING
P2540-3
FIELD 2 (2/4) P1400-2
FIELD 1 (1/3) P1400-4
BOTH
P2300-9
2F
FIELD RATE ENABLE
P2300-6
P9802-5 +5V
C9410
1.0μF
DELAY
R9400
50k
P2060-3
INTERFACE RELAY CONTROL
P2540-2
2R
P9010-16
S9380
LINE
P1600-2
P1802-5
P1802-4
P1802-3
P1802-2
P1802-1
P1808-7
P1808-6
P1808-5
P1808-4
P1808-3
P1808-2
P1808-1
1R
LINE RATE ENABLE
P2300-8
S9300
PEDESTAL INSERTION AND NOISE DELETION
P3300-1
ON
OFF
P2300-7
PROGRAM OUT PEDESTAL CONTROL
LINE TIMING
DS9320
NO INCOMING VIDEO
LAMP CONTROL
P2540-1
SEE PARTS LIST FOR EARLIER VALUES AND SERIAL NUMBER RANGES OF PARTS MARKED WITH BLUE OUTLINE.
S9201
POWER
FL9201
F9201
ON
T9001
DS9201
R9201
82k
P9201

REPLACEABLE MECHANICAL PARTS

PARTS ORDERING INFORMATION

Replacement parts are available from or through your local Tektronix, Inc. Field Office or representative.

Changes to Tektronix instruments are sometimes made to accommodate improved components as they become available, and to give you the benefit of the latest circuit improvements developed in our engineering department. It is therefore important, when ordering parts, to include the following information in your order: Part number, instrument type or number, serial number, and modification number if applicable.

If a part you have ordered has been replaced with a new or improved part, your local Tektronix, Inc. Field Office or representative will contact you concerning any change in part number.

Change information, if any, is located at the rear of this manual.

ITEM NAME

In the Parts List, an Item Name is separated from the description by a colon (:). Because of space limitations, an Item Name may sometimes appear as incomplete. For further Item Name identification, the U.S. Federal Cataloging Handbook H6-1 can be utilized where possible.

FIGURE AND INDEX NUMBERS

Items in this section are referenced by figure and index numbers to the illustrations.

INDENTATION SYSTEM

This mechanical parts list is indented to indicate item relationships. Following is an example of the indentation system used in the description column.

1 2 3 4 5 *Name & Description*

Assembly and/or Component
Attaching parts for Assembly and/or Component
**** END ATTACHING PARTS ****
Detail Part of Assembly and/or Component
Attaching parts for Detail Part
**** END ATTACHING PARTS ****
Parts of Detail Part
Attaching parts for Parts of Detail Part
**** END ATTACHING PARTS ****

Attaching Parts always appear in the same indentation as the item it mounts, while the detail parts are indented to the right. Indented items are part of, and included with, the next higher indentation.

Attaching parts must be purchased separately, unless otherwise specified.

ABBREVIATIONS

"	INCH
#	NUMBER SIZE
ACTR	ACTUATOR
ADPTR	ADAPTER
ALIGN	ALIGNMENT
AL	ALUMINUM
ASSEM	ASSEMBLED
ASSY	ASSEMBLY
ATTEN	ATTENUATOR
AWG	AMERICAN WIRE GAGE
BD	BOARD
BRKT	BRACKET
BRS	BRASS
BRZ	BRONZE
BSHG	BUSHING
CAB	CABINET
CAP	CAPACITOR
CER	CERAMIC
CHAS	CHASSIS
CKT	CIRCUIT
COMP	COMPOSITION
CONN	CONNECTOR
COV	COVER
CPLG	COUPLING
CRT	CATHODE RAY TUBE
DEG	DEGREE
DWR	DRAWER
ELCTRN	ELECTRON
ELEC	ELECTRICAL
ELCTLT	ELECTROLYTIC
ELEM	ELEMENT
EPL	ELECTRICAL PARTS LIST
EQPT	EQUIPMENT
EXT	EXTERNAL
FIL	FILLISTER HEAD
FLEX	FLEXIBLE
FLH	FLAT HEAD
FLTR	FILTER
FR	FRAME or FRONT
FSTNR	FASTENER
FT	FOOT
FXD	FIXED
GSKT	GASKET
HDL	HANDLE
HEX	HEXAGON
HEX HD	HEXAGONAL HEAD
HEX SOC	HEXAGONAL SOCKET
HLCPS	HELICAL COMPRESSION
HLEXT	HELICAL EXTENSION
HV	HIGH VOLTAGE
IC	INTEGRATED CIRCUIT
ID	INSIDE DIAMETER
IDENT	IDENTIFICATION
IMPLR	IMPELLER
IN	INCH
INCAND	INCANDESCENT
INSUL	INSULATOR
INTL	INTERNAL
LPHLDR	LAMPHOLDER
MACH	MACHINE
MECH	MECHANICAL
MTG	MOUNTING
NIP	NIPPLE
NON WIRE	NOT WIRE WOUND
OBD	ORDER BY DESCRIPTION
OD	OUTSIDE DIAMETER
OVH	OVAL HEAD
PH BRZ	PHOSPHOR BRONZE
PL	PLAIN or PLATE
PLSTC	PLASTIC
PN	PART NUMBER
PNH	PAN HEAD
PWR	POWER
RCPT	RECEPTACLE
RES	RESISTOR
RGD	RIGID
RLF	RELIEF
RTNR	RETAINER
SCH	SOCKET HEAD
SCOPE	OSCILLOSCOPE
SCR	SCREW
SE	SINGLE END
SECT	SECTION
SEMICOND	SEMICONDUCTOR
SHLD	SHIELD
SHLDR	SHOULDERED
SKT	SOCKET
SL	SLIDE
SLFLKG	SELF-LOCKING
SLVG	SLEEVING
SPR	SPRING
SQ	SQUARE
SST	STAINLESS STEEL
STL	STEEL
SW	SWITCH
T	TUBE
TERM	TERMINAL
THD	THREAD
THK	THICK
TNSN	TENSION
TPG	TAPPING
TRH	TRUSS HEAD
V	VOLTAGE
VAR	VARIABLE
W/	WITH
WSHR	WASHER
XFMR	TRANSFORMER
XSTR	TRANSISTOR

CROSS INDEX - MFR. CODE NUMBER TO MANUFACTURER

Mfr. Code	Manufacturer	Address	City, State, Zip Code
00779	AMP INC	P O BOX 3608	HARRISBURG PA 17105
01634	ALUMINUM CO OF AMERICA	1501 ALCOA BLDG	PITTSBURGH PA 15219
02660	BUNKER RAMO CORP AMPHENOL NORTH AMERICA DIV	2801 S 25TH AVE	BROADVIEW IL 60153
06666	GENERAL DEVICES CO INC	1410 S POST RD P O BOX 39100	INDIANAPOLIS IN 46239
06950	VSI CORP SCREWCORP DIVISION	13001 E TEMPLE AVE	CITY OF INDUSTRY CA 91746
08261	SPECTRA-STRIP AN ELTRA CO	7100 LAMPSON AVE	GARDEN GROVE CA 92642
09422	PLASTIC STAMPING CORP	2216 W ARMITAGE AVE	CHICAGO IL 60647
09922	BURNDY CORP	RICHARDS AVE	NORWALK CT 06852
11897	PLASTIGLIDE MFG CORP	2701 W EL SEGUNDO BLVD	HAWTHORNE CA 90250
12327	FREEWAY CORP	9301 ALLEN DR	CLEVELAND OH 44125
12360	ALBANY FASTENERS INC DIV OF PNEUMO CORP	145 WOODWARD AVE	SOUTH NORWALK CT 06854
16428	BELDEN CORP ELECTRONIC DIV	2200 US HWY 27 SOUTH P O BOX 1980	RICHMOND IN 47374
22526	DU PONT E I DE NEMOURS AND CO INC DU PONT CONNECTOR SYSTEMS	30 HUNTER LANE	CAMP HILL PA 17011
24546	CORNING GLASS WORKS	550 HIGH ST	BRADFORD PA 16701
24931	SPECIALTY CONNECTOR CO INC	2620 ENDRESS PLACE P O BOX D	GREENWOOD IN 46142
27238	BRISTOL INDUSTRIES	630 E LAMBERT RD P O BOX 630	BREA CA 92621
29587	BUNKER RAMO CORP AMPHENOL INDUSTRIAL DIV	1830 S 54TH AVE	CHICAGO IL 60650
32436	SYSCON INTERNATIONAL, INC.	205 SYCAMORE ST.	SOUTH BEND, IN 46622
46384	PENN ENGINEERING AND MFG CORP	P O BOX 311	DOYLESTOWN PA 18901
70903	BELDEN CORP	2000 S BATAVIA AVE	GENEVA IL 60134
71785	TRW INC TRW CINCH CONNECTORS	1501 MORSE AVE	ELK GROVE VILLAGE IL 60007
73743	FISCHER SPECIAL MFG CO	446 MORGAN ST	CINCINNATI OH 45206
73803	TEXAS INSTRUMENTS INC METALLURGICAL MATERIALS DIVISION	34 FOREST ST	ATTLEBORO MA 02703
74445	HOLO-KROME CO	31 BROOK ST	WEST HARTFORD CT 06110
75915	LITTELFUSE INC	800 E NORTHWEST HWY	DES PLAINES IL 60016
77900	SHAKEPROOF DIV OF ILLINOIS TOOL WORKS	SAINT CHARLES RD	ELGIN IL 60120
78189	ILLINOIS TOOL WORKS INC SHAKEPROOF DIVISION	ST CHARLES ROAD	ELGIN IL 60120
79136	WALDES KOHINOOR INC	47-16 AUSTEL PLACE	LONG ISLAND CITY NY 11101
80009	TEKTRONIX INC	4900 S W GRIFFITH DR P O BOX 500	BEAVERTON OR 97077
80033	MICRODOT MANUFACTURING INC PRESTOLE EVERLOCK DIV	1345 MIAMI ST P O BOX 278	TOLEDO OH 43605
86928	SEASTROM MFG CO INC	701 SONORA AVE	GLENDALE CA 91201
93907	TEXTRON INC CAMCAR DIV	600 18TH AVE	ROCKFORD IL 61101
94222	SOUTHCO INC	210 N BRINTON LAKE RD	CONCORDVILLE PA 19331
95146	ALCO ELECTRONIC PRODUCTS INC	1551 OSGOOD ST	NORTH ANDOVER MA 01845
S3109	FELLER ASA ADOLF AG C/O PANEL COMPONENTS CORP	355 TESCONI CIRCLE	SANTA ROSA CA 95401
TK0435	LEWIS SCREW CO	4114 S PEORIA	CHICAGO IL 60609
TK0861	H SCHURTER AG DIST PANEL COMPONENTS	2015 SECOND STREET	BERKELEY CA 94170
TK1373	PATELEC-CEM (ITALY)	10156 TORINO	VAICENTALLO 62/455 ITALY

Fig. & Index No.	Tektronix Part No.	Serial/Assembly No. Effective	Dscont	Qty	12345 Name & Description	Mfr. Code	Mfr. Part No.
1-1	366-0500-00			2	KNOB:GY,0.252 ID X 0.925 OD X 0.67 H	80009	366-0500-00
	213-0153-00			2	.SETSCREW:5-40 X 0.125,STL	27238	ORDER BY DESCR
-2	366-0500-00			2	KNOB:GY,0.252 ID X 0.925 OD X 0.67 H	80009	366-0500-00
	213-0153-00			2	.SETSCREW:5-40 X 0.125,STL	27238	ORDER BY DESCR
-3	366-0497-00			3	KNOB:GY,0.127 ID X 0.706 OD X 0.6 H	80009	366-0497-00
	213-0153-00			1	.SETSCREW:5-40 X 0.125,STL	27238	ORDER BY DESCR
-4	366-0215-02			5	KNOB:LEVER SWITCH	80009	366-0215-02
-5	390-0276-00	B010100	B100761	1	CAB.TOP,CAL FIX:TOP	80009	390-0276-00
	390-0276-01	B100762		1	CAB.TOP,CAL FIX:	80009	390-0276-01
-6	355-0134-00			11	.STUD,TURNLOCK F:FLAT HEAD,STL CD PL	94222	82-14-140-16
-7	214-0389-00			11	.FSTNR,RETAINER:SPLIT RING	94222	82-32-101-17
-8	213-0126-00			2	SETSCREW:6-32 X 0.25,STL	74445	ORDER BY DESCR
-9	354-0025-00			2	RING,RETAINING:EXTERNAL,U/O 0.187 DIA SFT	79136	5555-18
-10	210-0894-00			2	WASHER,FLAT:0.19 ID X 0.438 OD X 0.031	09422	ORDER BY DESCR
-11	367-0160-00	B010100	B100953	2	HANDLE,BOW:1.25 L,AL ANODIZED	80009	367-0160-00
	367-0160-02	B100954		2	HANDLE,BOW:1.25 L,ALUMINUM	80009	367-0160-02
					(ATTACHING PARTS)		
-12	211-0014-00			4	SCREW,MACHINE:4-40 X 0.5,PNH,STL	TK0435	ORDER BY DESCR
					(END ATTACHING PARTS)		
-13	407-1073-00			2	BRACKET,ANGLE:RACKMOUNT,ALUMINUM	80009	407-1073-00
					(ATTACHING PARTS)		
-14	212-0004-00			4	SCREW,MACHINE:8-32 X 0.312,PNH,STL	TK0435	ORDER BY DESCR
					(END ATTACHING PARTS)		
-15	351-0104-00	B010100	B080359	1	SL SECT,DWR EXT:12.625 X 2.25	06666	C-720-2
	351-0104-03	B080360		1	SL SECT,DWR EXT:12.625 L,W/O HARDWARE	06666	C-720-3
					(ATTACHING PARTS)		
-16	212-0004-00			2	SCREW,MACHINE:8-32 X 0.312,PNH,STL	TK0435	ORDER BY DESCR
					(END ATTACHING PARTS)		
	342-0444-00	B080840		1	INSUL,SW HANDLE:GRAY,VINYL	95146	C-10-GREY
-17	333-1678-00			1	PANEL,FRONT:	80009	333-1678-00
	333-1678-01			1	PANEL,FRONT:	80009	333-1678-01
					(ATTACHING PARTS)		
-18	211-0107-00			4	SCREW,MACHINE:1-72 X 0.312,RDH,SST	12360	ORDER BY DESCR
					(END ATTACHING PARTS)		
-19	----- -----			1	SWITCH,TOGGLE:(SEE S9201 REPL)		
					(ATTACHING PARTS)		
-20	210-0562-00			2	NUT,PLAIN,HEX:0.25-40 X 0.312 BRS CD PL	73743	20224-402
-21	210-0940-00			1	WASHER,FLAT:0.25 ID X 0.375 OD X 0.02,STL	12327	ORDER BY DESCR
					(END ATTACHING PARTS)		
-22	----- -----			1	SWITCH,LEVER:(SEE S9300 REPL)		
					(ATTACHING PARTS)		
-23	220-0413-00			2	NUT,SLEEVE:4-40 X 0.562 HEX,BRS CD PL	80009	220-0413-00
					(END ATTACHING PARTS)		
-24	----- -----			2	SWITCH,LEVER:(SEE S9360 REPL)		
					(ATTACHING PARTS)		
	220-0413-00			4	NUT,SLEEVE:4-40 X 0.562 HEX,BRS CD PL	80009	220-0413-00
					(END ATTACHING PARTS)		
-25	----- -----			2	SWITCH,LEVER:(SEE S9480 REPL)		
					(ATTACHING PARTS)		
	220-0413-00			4	NUT,SLEEVE:4-40 X 0.562 HEX,BRS CD PL	80009	220-0413-00
					(END ATTACHING PARTS)		
-26	----- -----			1	SWITCH,ROTARY:(SEE S9340 REPL)		
					(ATTACHING PARTS)		
-27	210-0590-00			1	NUT,PLAIN,HEX:0.375-32 X 0.438 BRS CD PL	73743	28269-402
-28	210-0978-00			1	WASHER,FLAT:0.375 ID X 0.5 OD X 0.024,STL	12327	ORDER BY DESCR
					(END ATTACHING PARTS)		
-29	----- -----			1	SWITCH,ROTARY:(SEE S9380 REPL)		
					(ATTACHING PARTS)		
-30	210-0590-00			1	NUT,PLAIN,HEX:0.375-32 X 0.438 BRS CD PL	73743	28269-402
-31	210-0978-00			1	WASHER,FLAT:0.375 ID X 0.5 OD X 0.024,STL	12327	ORDER BY DESCR
					(END ATTACHING PARTS)		
-32	----- -----			1	SWITCH,ROTARY:(SEE S9500 REPL)		
					(ATTACHING PARTS)		
-33	210-0590-00			1	NUT,PLAIN,HEX:0.375-32 X 0.438 BRS CD PL	73743	28269-402
-34	210-0978-00			1	WASHER,FLAT:0.375 ID X 0.5 OD X 0.024,STL	12327	ORDER BY DESCR
					(END ATTACHING PARTS)		
-35	----- -----			1	SWITCH ROTARY:(SEE S9600 REPL)		

Fig. & Index No.	Tektronix Part No.	Serial/Assembly No. Effective	Dscont	Qty	12345 Name & Description	Mfr. Code	Mfr. Part No.
1-					(ATTACHING PARTS)		
-36	210-0590-00			1	NUT,PLAIN,HEX:0.375-32 X 0.438 BRS CD PL	73743	28269-402
-37	210-0978-00			1	WASHER,FLAT:0.375 ID X 0.5 OD X 0.024,STL	12327	ORDER BY DESCR
					(END ATTACHING PARTS)		
-38	----- -----			1	RES.,VAR:(SEE R9400 REPL)		
					(ATTACHING PARTS)		
-39	210-0583-00			1	NUT,PLAIN,HEX:0.25-32 X 0.312,BRS CD PL	73743	2X-20319-402
-40	210-0940-00			1	WASHER,FLAT:0.25 ID X 0.375 OD X 0.02,STL	12327	ORDER BY DESCR
-41	210-0223-00			1	TERMINAL,LUG:0.26 ID,LOCKING,BRZ TIN PL	86928	5441-37
					(END ATTACHING PARTS)		
-42	----- -----			1	RES.,VAR:(SEE R9420 REPL)		
					(ATTACHING PARTS)		
-43	210-0583-00			1	NUT,PLAIN,HEX:0.25-32 X 0.312,BRS CD PL	73743	2X-20319-402
-44	210-0940-00			1	WASHER,FLAT:0.25 ID X 0.375 OD X 0.02,STL	12327	ORDER BY DESCR
-45	210-0046-00			1	WASHER,LOCK:0.261 ID,INTL,0.018 THK,STL	77900	1214-05-00-0541C
					(END ATTACHING PARTS)		
-46	----- -----			1	RES.,VAR:(SEE R9460 REPL)		
					(ATTACHING PARTS)		
-47	210-0583-00			1	NUT,PLAIN,HEX:0.25-32 X 0.312,BRS CD PL	73743	2X-20319-402
-48	210-0940-00			1	WASHER,FLAT:0.25 ID X 0.375 OD X 0.02,STL	12327	ORDER BY DESCR
					(END ATTACHING PARTS)		
-49	333-1679-00			1	PANEL,FRONT:	80009	333-1679-00
-50	333-1663-00			1	PANEL,FRONT:	80009	333-1663-00
					(ATTACHING PARTS)		
-51	211-0107-00			4	SCREW,MACHINE:1-72 X 0.312,RDH,SST	12360	ORDER BY DESCR
					(END ATTACHING PARTS)		
-52	200-0609-00			1	BASE,LAMPHOLDER:0.4 OD X 0.16"L,GRAY PLSTC	80009	200-0609-00
-53	378-0541-00			1	LENS,LIGHT:FROSTED,PLASTIC	80009	378-0541-00
-54	352-0084-00			1	HOLDER,NEON:T-2 OR SMALLER UNBASED LAMP	80009	352-0084-00
-55	----- -----			1	LAMP,LED:(SEE DS9320 REPL)		
-56	----- -----			3	TRANSISTOR:(SEE Q9035,Q9055 & Q9085 REPL)		
					(ATTACHING PARTS)		
-57	210-0586-00			3	NUT,PL,ASSEM WA:4-40 X 0.25,STL CD PL	78189	211-041800-00
-58	342-0163-00			3	INSULATOR,PLATE:TRANSISTOR,MICA	80009	342-0163-00
					(END ATTACHING PARTS)		
-59	----- -----			1	CKT BOARD ASSY:TIMING(SEE A1 REPL)		
-60	131-0589-00			29	.TERM,PIN:0.46 L X 0.025 SQ PH BRZ GLD	22526	48283-029
	131-0608-00			61	.TERMINAL,PIN:0.365 L X 0.025 BRZ GLD PL	22526	48283-036
-61	136-0252-04	B010100	B040199	114	.SOCKET,PIN TERM:U/W 0.016-0.018 DIA PINS	22526	75060 007
	136-0220-00	B040200	B080589	30	.SKT,PL-IN ELEK:TRANSISTOR 3 CONTACT	71785	133-23-11-034
-62	136-0269-00			7	.SKT,PL-IN ELEK:MICROCIRCUIT,14 DIP,PCB MT	73803	CS9002-14
-63	214-0579-00			1	.TERM,TEST POINT:BRS CD PL	80009	214-0579-00
-64	131-0621-00			2	.CONN,TERM:22-26 AWG,BRS,CU BE GLD PL	22526	46231-000
-65	131-0707-00			6	.CONTACT,ELEC:22-26 AWG,BRS,CU BE GLD PL	22526	47439-000
-66	131-0993-00			1	.BUS,CONDUCTOR:SHUNT ASSEMBLY,BLACK	22526	65474-005
-67	352-0177-00			1	.HLDR,TERM CONN:6 WIRE,DBL ROW BLACK	80009	352-0177-00
-68	352-0198-00			1	.HLDR,TERM CONN:2 WIRE,BLACK	80009	352-0198-00
-69	----- -----			1	CKT BOARD ASSY:PROGRAM(SEE A3 REPL)		
-70	131-0589-00			44	.TERM,PIN:0.46 L X 0.025 SQ PH BRZ GLD	22526	48283-029
	131-0608-00			47	.TERMINAL,PIN:0.365 L X 0.025 BRZ GLD PL	22526	48283-036
-71	131-0998-00			1	.BUS,CONDUCTOR:9 TERM,8.132 X 0.375 PH BRZ	80009	131-0998-00
-72	136-0252-04	B010100	B040199	18	.SOCKET,PIN TERM:U/W 0.016-0.018 DIA PINS	22526	75060-007
	136-0220-00	B040200	B080589	6	.SKT,PL-IN ELEK:TRANSISTOR 3 CONTACT	71785	133-23-11-034
-73	136-0260-02	B010100	B090707	1	.SKT,PL-IN ELEK:MICROCKT,16 DIP,LOW CL	09922	DILB16P-108T
-74	136-0269-00			12	.SKT,PL-IN ELEK:MICROCIRCUIT,14 DIP,PCB MT	73803	CS9002-14
-75	131-0707-00			24	.CONTACT,ELEC:22-26 AWG,BRS,CU BE GLD PL	22526	47439-000
-76	131-0993-01			1	.BUS,CONDUCTOR:SHUNT ASSEMBLY,BROWN	00779	850100-9
	131-0993-02			1	.BUS,CONDUCTOR:SHUNT ASSEMBLY,RED	00779	1-850100-0
	131-0993-03			1	.BUS,CONDUCTOR:SHUNT ASSEMBLY,ORANGE	00779	850100-3
	131-0993-06			6	.BUS,CONDUCTOR:SHUNT ASSEMBLY,BLUE	00779	850100-6
-77	352-0177-00			1	.HLDR,TERM CONN:6 WIRE,DBL ROW BLACK	80009	352-0177-00
-78	----- -----			1	CKT BOARD ASSY:AMPLIFIER(SEE A2 REPL)		
	337-1417-00			2	.SHIELD,ELEC:0.55 SQ X 0.685 INCH HIGH	32436	A-1020002
-79	131-0589-00			33	.TERM,PIN:0.46 L X 0.025 SQ PH BRZ GLD	22526	48283-029
	131-0608-00			3	.TERMINAL,PIN:0.365 L X 0.025 BRZ GLD PL	22526	48283-036
-80	131-0998-00			2	.BUS,CONDUCTOR:9 TERM,8.132 X 0.375 PH BRZ	80009	131-0998-00
-81	136-0235-00			2	.SKT,PL-IN ELEK:TRANSISTOR,6 CONTACT	71785	133-96-12-062

Fig. & Index No.	Tektronix Part No.	Serial/Assembly No. Effective	Dscont	Qty	12345 Name & Description	Mfr. Code	Mfr. Part No.
1-82	136-0252-04	B010100	B040199	84	.SOCKET,PIN TERM:U/M 0.016-0.018 DIA PINS	22526	75060-007
	136-0220-00	B040200	B080589	28	.SKT,PL-IN ELEK:TRANSISTOR 3 CONTACT	71785	133-23-11-034
	136-0220-00	B080590		2	.SKT,PL-IN ELEK:TRANSISTOR 3 CONTACT	71785	133-23-11-034
-83	136-0260-01			2	.SKT,PL-IN ELEK:MICROCIRCUIT,16 DIP,PCB MT	71785	133-51-02-075
-84	214-0579-00			2	.TERM,TEST POINT:BRS CD PL	80009	214-0579-00
-85	131-0707-00			2	.CONTACT,ELEC:22-26 AWG,BRS,CU BE GLD PL	22526	47439-000
-86	131-0993-06			1	.BUS,CONDUCTOR:SHUNT ASSEMBLY,BLUE	00779	850100-6
-87	----- -----			1	CKT BOARD ASSY:NOISE WEIGHT NETWORK (SEE A6 REPL)		
-88	131-0787-00			4	.TERMINAL,PIN:0.64 L X 0.025 SQ PH BRZ	22526	47359-000
					.(ATTACHING PARTS)		
-89	211-0012-00			2	.SCREW,MACHINE:4-40 X 0.375,PNH,STL	TK0435	ORDER BY DESCR
					.(END ATTACHING PARTS)		
-90	----- -----			1	CKT BOARD ASSY:LP FILTER(SEE A5 REPL)		
-91	131-0787-00			2	.TERMINAL,PIN:0.64 L X 0.025 SQ PH BRZ	22526	47359-000
-92	136-0263-03	B010100	B080249	4	.SOCKET,PIN TERM:U/M 0.025 SQ PINS	00779	85864-2
	136-0263-04	B080250		4	.SOCKET,PIN TERM:U/M 0.025 SQ PIN	22526	75377-001
					.(ATTACHING PARTS)		
-93	211-0012-00			2	.SCREW,MACHINE:4-40 X 0.375,PNH,STL	TK0435	ORDER BY DESCR
					.(END ATTACHING PARTS)		
-94	----- -----			1	CKT BD ASSY:NOISE GENERATOR(SEE A4 REPL)		
-95	131-0589-00			9	.TERM,PIN:0.46 L X 0.025 SQ PH BRZ GLD	22526	48283-029
	131-0590-00			4	.TERMINAL,PIN:0.71 L X 0.025 SQ PH BRZ	80009	131-0590-00
-96	136-0252-04	B010100	B040199	26	.SOCKET,PIN TERM:U/M 0.016-0.018 DIA PINS	22526	75060-007
	136-0220-00	B040200	B080589	6	.SKT,PL-IN ELEK:TRANSISTOR 3 CONTACT	71785	133-23-11-034
	136-0252-01	B040200		8	.SOCKET,PIN TERM:U/M 0.0.19 DIA PINS	00779	1-332095-2
-97	202-0196-00			1	.SHIELD,ELEC:1.25 SQ X 0.68,AL	80009	202-0196-00
-98	361-0094-00			4	.SPACER,POST:0.25 L 0.188 HEX HD	46384	SOA 440-8
					.(ATTACHING PARTS)		
-99	211-0007-00			4	.SCREW,MACHINE:4-40 X 0.188,PNH,STL	TK0435	ORDER BY DESCR
					.(END ATTACHING PARTS)		
-100	----- -----			1	CKT BOARD ASSY:POWER SUPPLY(SEE A7 REPL)		
-101	131-0589-00			57	.TERM,PIN:0.46 L X 0.025 SQ PH BRZ GLD	22526	48283-029
-102	136-0252-04	B010100	B040199	36	.SOCKET,PIN TERM:U/M 0.016-0.018 DIA PINS	22526	75060-007
	136-0220-00	B040200	B080589	12	.SKT,PL-IN ELEK:TRANSISTOR 3 CONTACT	71785	133-23-11-034
	136-0220-00	B080590		3	.SKT,PL-IN ELEK:TRANSISTOR 3 CONTACT	71785	133-23-11-034
-103	214-0579-00			4	.TERM,TEST POINT:BRS CD PL	80009	214-0579-00
					.(ATTACHING PARTS)		
-104	211-0116-00	B010100	B090632	2	SCR,ASSEM WSHR:4-40 X 0.312,PNH,BRS,NP	77900	ORDER BY DESCR
	211-0292-00	B090633		2	SCR,ASSEM WSHR:4-40 X 0.29,PNH,BRS NI PL	78189	51-040445-01
					.(END ATTACHING PARTS)		
-105	----- -----			1	TRANSFORMER:(SEE T9001 REPL)		
					.(ATTACHING PARTS)		
-106	211-0513-00			4	SCREW,MACHINE:6-32 X 0.625,PNH,STL	93907	B80-00032-003
-107	210-0802-00			4	WASHER,FLAT:0.15 ID X 0.312 OD X 0.032	12327	ORDER BY DESCR
-108	210-0006-00			4	WASHER,LOCK:#6 INTL,0.018 THK,STL	77900	1206-00-00-0541C
-109	129-0391-00			4	SPACER,POST:0.375 L,6-32 THRU,AL,0.375 HEX	80009	129-0391-00
					(END ATTACHING PARTS)		
-110	344-0133-00			16	CLIP,SPR TNSN:CKT BOARD MT,ACETAL BLACK	80009	344-0133-00
					(ATTACHING PARTS)		
-111	210-0586-00			16	NUT,PL,ASSEM WA:4-40 X 0.25,STL CD PL	78189	211-041800-00
					(END ATTACHING PARTS)		
-112	214-1696-00			2	PIN,GUIDE:0.122 DIA X 0.25 M/0.25 HEX	80009	214-1696-00
-113	214-1696-00			6	PIN,GUIDE:0.122 DIA X 0.25 M/0.25 HEX	80009	214-1696-00
					(ATTACHING PARTS)		
-114	210-0202-00			6	TERMINAL,LUG:0.146 ID,LOCKING,BRZ TIN PL	86928	A-373-158-2
					(END ATTACHING PARTS)		
-115	210-0202-00			3	TERMINAL,LUG:0.146 ID,LOCKING,BRZ TIN PL	86928	A-373-158-2
					(ATTACHING PARTS)		
-116	210-0457-00			3	NUT,PL,ASSEM WA:6-32 X 0.312,STL CD PL	78189	511-061800-00
					(END ATTACHING PARTS)		
-117	----- -----			1	LINE FILTER:(SEE FL9201 REPL)		
					(ATTACHING PARTS)		
-118	210-0586-00			2	NUT,PL,ASSEM WA:4-40 X 0.25,STL CD PL	78189	211-041800-00
-119	211-0012-00			2	SCREW,MACHINE:4-40 X 0.375,PNH,STL	TK0435	ORDER BY DESCR
					(END ATTACHING PARTS)		
-120	352-0076-00	B010100	B090627	1	FUHLR,EXTR POST:3AG,20A,250V,PNL MT	75915	3420212-L

Fig. & Index No.	Tektronix Part No.	Serial/Assembly No. Effective	Dscont	Qty	12345 Name & Description	Mfr. Code	Mfr. Part No.
1-	204-0832-00	B090638		1	BODY,FUSEHOLDER:3AG & 5 X 20MM FUSES	TK0861	031 1673
	200-2265-00	B090638		1	CAP,FUSEHOLDER:5 X 20MM FUSES	TK0861	FEK 031.1663
	210-1039-00	B090638		1	WASHER,LOCK:0.521 ID,INT,0.025 THK,SST	24931	ORDER BY DESCR
-121	131-0149-00			1	CONN,RCPT,ELEC:MALE,24 CONTACT	02660	26-159-24
					(ATTACHING PARTS)		
-122	211-0012-00			2	SCREW,MACHINE:4-40 X 0.375,PNH,STL	TK0435	ORDER BY DESCR
-123	210-0201-00			2	TERMINAL,LUG:0.12 ID,LOCKING,BRZ TIN PL	86928	A373-157-2
-124	210-0586-00			2	NUT,PL,ASSEM WA:4-40 X 0.25,STL CD PL	78189	211-041800-00
					(END ATTACHING PARTS)		
-125	441-1101-00	B010100	B100761	1	CHAS,CAL FXTR:MAIN	80009	441-1101-00
	441-1101-01	B100762		1	CHAS,CAL FXTR:MAIN	80009	441-1101-01
-126	344-0118-00			6	.RTNR,CAPACITOR:1.0 DIA,STEEL	80033	E50008 -044
					.(ATTACHING PARTS)		
-127	210-0610-00			6	.RIVET,SOLID:0.187 L X 0.125 OD,100 DEG FLH	01634	
					.,AL		
					.(END ATTACHING PARTS)		
-128	214-0388-00			11	.FASTENER,RCPT:LEAF SPRING	94222	82-35-295-15
					.(ATTACHING PARTS)		
-129	210-0657-01			22	.EYELET,METALLIC:0.0890D X 0.218L,BRS,CD PL	80009	210-0657-01
					.(END ATTACHING PARTS)		
	210-0202-00			1	TERMINAL,LUG:0.146 ID,LOCKING,BRZ TIN PL	86928	A-373-158-2
					(ATTACHING PARTS)		
	210-0457-00			1	NUT,PL,ASSEM WA:6-32 X 0.312,STL CD PL	78189	511-061800-00
					(END ATTACHING PARTS)		
-130	131-0148-00			1	CONN,RCPT,ELEC:FEMALE,24 CONTACT	02660	26-190-24-1004
					(ATTACHING PARTS)		
-131	211-0014-00			2	SCREW,MACHINE:4-40 X 0.5,PNH,STL	TK0435	ORDER BY DESCR
-132	129-0371-00			2	SPACER,POST:0.83 L,4-40,AL,0.25 HEX	80009	129-0371-00
					(END ATTACHING PARTS)		
-133	----- -----			1	CKT BOARD ASSY:RELAY(SEE AB REPL)		
-134	131-0566-00			1	.BUS,COND:DUMMY RES,0.094 OD X 0.225L	24546	OMA 07
-135	131-0589-00			9	.TERM,PIN:0.46 L X 0.025 SQ PH BRZ GLD	22526	48283-029
-136	136-0252-04	B010100	B040199	8	.SOCKET,PIN TERM:U/W 0.016-0.018 DIA PINS	22526	75060-007
	136-0252-01	B040200	B070249	8	.SOCKET,PIN TERM:U/W 0.0.19 DIA PINS	00779	1-332095-2
	136-0337-00	B070250		1	.SKT,PL-IN ELEK:RELAY,8 CONTACT	80009	136-0337-00
	136-0220-00	B040200	B080589	1	.SKT,PL-IN ELEK:TRANSISTOR 3 CONTACT	71785	133-23-11-034
-137	131-0126-00			3	CONN,RCPT,ELEC:BNC,FEMALE	24931	28JR205-2
-138	131-0126-00			1	CONN,RCPT,ELEC:BNC,FEMALE	24931	28JR205-2
					(ATTACHING PARTS)		
-139	210-0241-00			1	TERMINAL,LUG:0.515 ID,PLAIN,STL CD PL	80009	210-0241-00
					(END ATTACHING PARTS)		
-140	131-1097-00			2	CONN,RCPT,ELEC:BNC,FEMALE,CKT BOARD MT	24931	28JR220-2
-141	131-0325-00			1	CONN,PLUG,ELEC:24 CONTACT,MALE	71785	57-30240(398)
-142	131-0324-00			1	CONN,RCPT,ELEC:24 CONTACT,FEMALE	29587	57-40240 (398)
					(ATTACHING PARTS)		
-143	211-0062-00			2	SCREW,MACHINE:2-56 X 0.312,PNH,STL	06950	ORDER BY DESCR
-144	210-0259-00			2	TERMINAL,LUG:0.099 ID,LOCKING,BRS CD PL	80009	210-0259-00
-145	210-0405-00			2	NUT,PLAIN,HEX:2-56 X 0.188,BRS CD PL	73743	12157-50
	614-0599-00			1	FRONT PNL ASSY:	80009	614-0599-00
					(END ATTACHING PARTS)		
-146	441-1059-00			1	.CHAS,INST-DELE:INTERFACE	80009	441-1059-00
	255-0334-00			1	.PLASTIC CHANNEL:12.75 X 0.175 X 0.155	11897	122-37-2500
-147	179-1857-00			1	.WIRING HARNESS:MAIN	80009	179-1857-00
-148	131-0621-00			60	..CONN,TERM:22-26 AWG,BRS,CU BE GLD PL	22526	46231-000
	131-0622-00			22	..CONTACT,ELEC:28-32 AWG,BRS & CU BE GLD PL	22526	46241-000
	131-0792-00			31	..CONNECTOR,TERM:18-20 AWG,CU BE GOLD PL	22526	46221
-149	131-0707-00			20	..CONTACT,ELEC:22-26 AWG,BRS,CU BE GLD PL	22526	47439-000
-150	352-0163-00			1	..HLDR,TERM CONN:5 WIRE,BLACK	80009	352-0163-00
-151	352-0165-00			3	..HLDR,TERM CONN:7 WIRE,BLACK	80009	352-0165-00
-152	352-0166-00			1	..HLDR,TERM CONN:8 WIRE,BLACK	80009	352-0166-00
-153	352-0171-00			3	..HLDR,TERM CONN:1 WIRE,BLACK	80009	352-0171-00
-154	352-0197-00			1	..HLDR,TERM CONN:1 WIRE,BLACK	80009	352-0197-00
-155	352-0198-00			10	..HLDR,TERM CONN:2 WIRE,BLACK	80009	352-0198-00
-156	352-0199-00			4	..HLDR,TERM CONN:3 WIRE,BLACK	80009	352-0199-00
-157	352-0200-00			8	..HLDR,TERM CONN:4 WIRE,BLACK	80009	352-0200-00
-158	352-0201-00			1	..HLDR,TERM CONN:5 WIRE,BLACK	80009	352-0201-00
-159	352-0202-00			3	..HLDR,TERM CONN:6 WIRE,BLACK	80009	352-0202-00

Fig. & Index No.	Tektronix Part No.	Serial/Assembly No. Effective	Dscont	Qty	12345 Name & Description	Mfr. Code	Mfr. Part No.
1-160	352-0205-00			1	..HLDR,TERM CONN:9 WIRE,BLACK	80009	352-0205-00
-161	352-0206-00			3	..HLDR,TERM CONN:10 WIRE,BLACK	80009	352-0206-00
	179-1858-00			1	.WIRING HARNESS:POWER SUPPLY	80009	179-1858-00
	131-0621-00			22	..CONN,TERM:22-26 AWG,BRS,CU BE GLD PL	22526	46231-000
-162	352-0203-00			2	..HLDR,TERM CONN:7 WIRE,BLACK	80009	352-0203-00
	352-0205-00			1	..HLDR,TERM CONN:9 WIRE,BLACK	80009	352-0205-00
	179-1859-00			1	.WIRING HARNESS:RELAY	80009	179-1859-00
	131-0621-00			2	..CONN,TERM:22-26 AWG,BRS,CU BE GLD PL	22526	46231-000
	131-0622-00			3	..CONTACT,ELEC:28-32 AWG,BRS & CU BE GLD PL	22526	46241-000
	131-0792-00			3	..CONNECTOR,TERM:18-20 AWG,CU BE GOLD PL	22526	46221
	352-0198-00			1	..HLDR,TERM CONN:2 WIRE,BLACK	80009	352-0198-00
	352-0203-00			1	..HLDR,TERM CONN:7 WIRE,BLACK	80009	352-0203-00
	179-1881-00			1	.WIRING HARNESS:AC	80009	179-1881-00
-163	175-0830-00			AR	.CABLE,SP,ELEC:7,26 AWG,STRD,PVC JKT,RBN	08261	111-2699-972

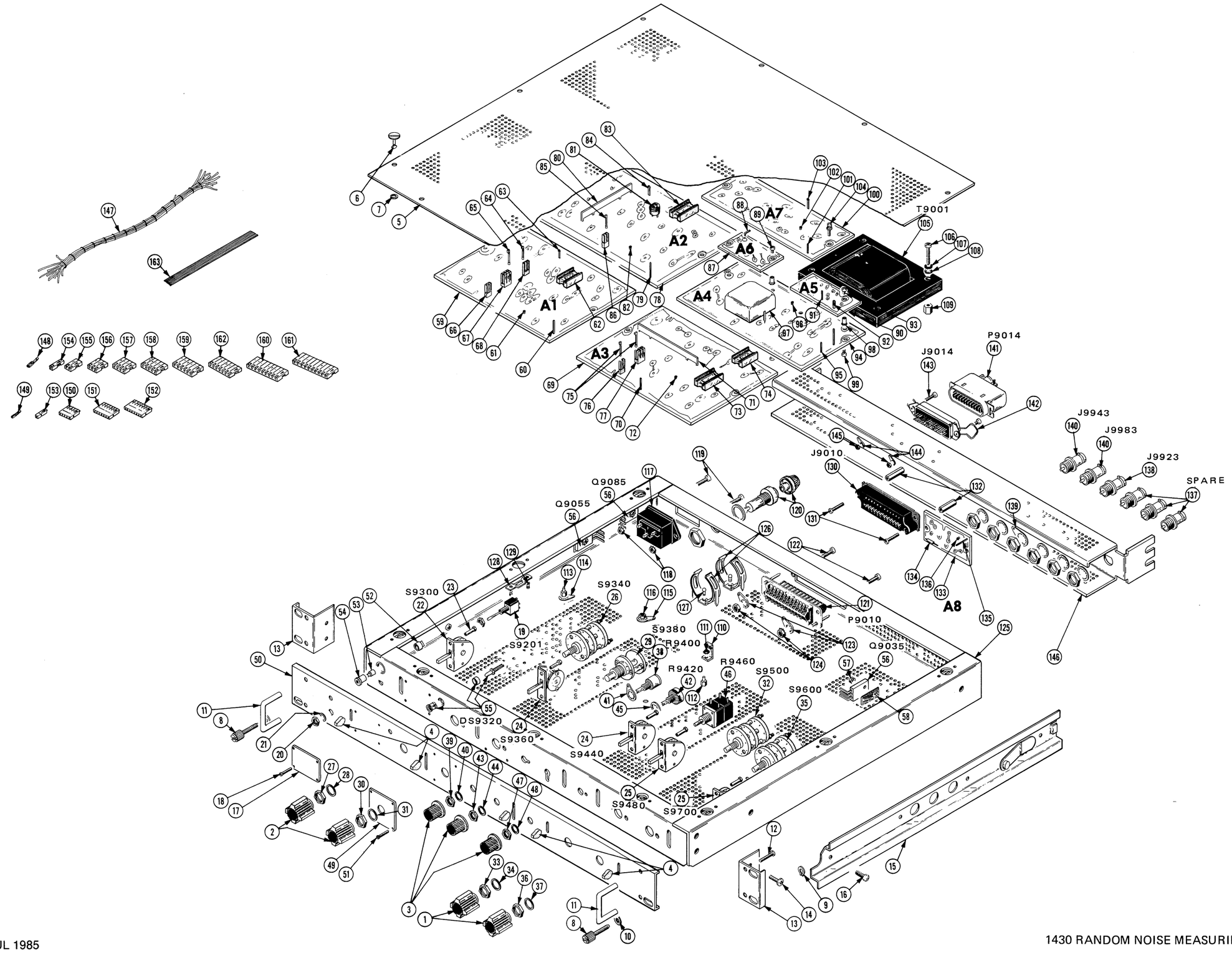
A1
A2
A3
A4
A5
A6
A7
A8
T9001
P9014
J9014
J9943
J9983
J9923
SPARE
J9010
P9010
Q9085
Q9055
Q9035
S9300
S9340
S9380
S9201
R9400
R9420
R9460
S9500
S9600
DS9320
S9360
S9440
S9480
S9700

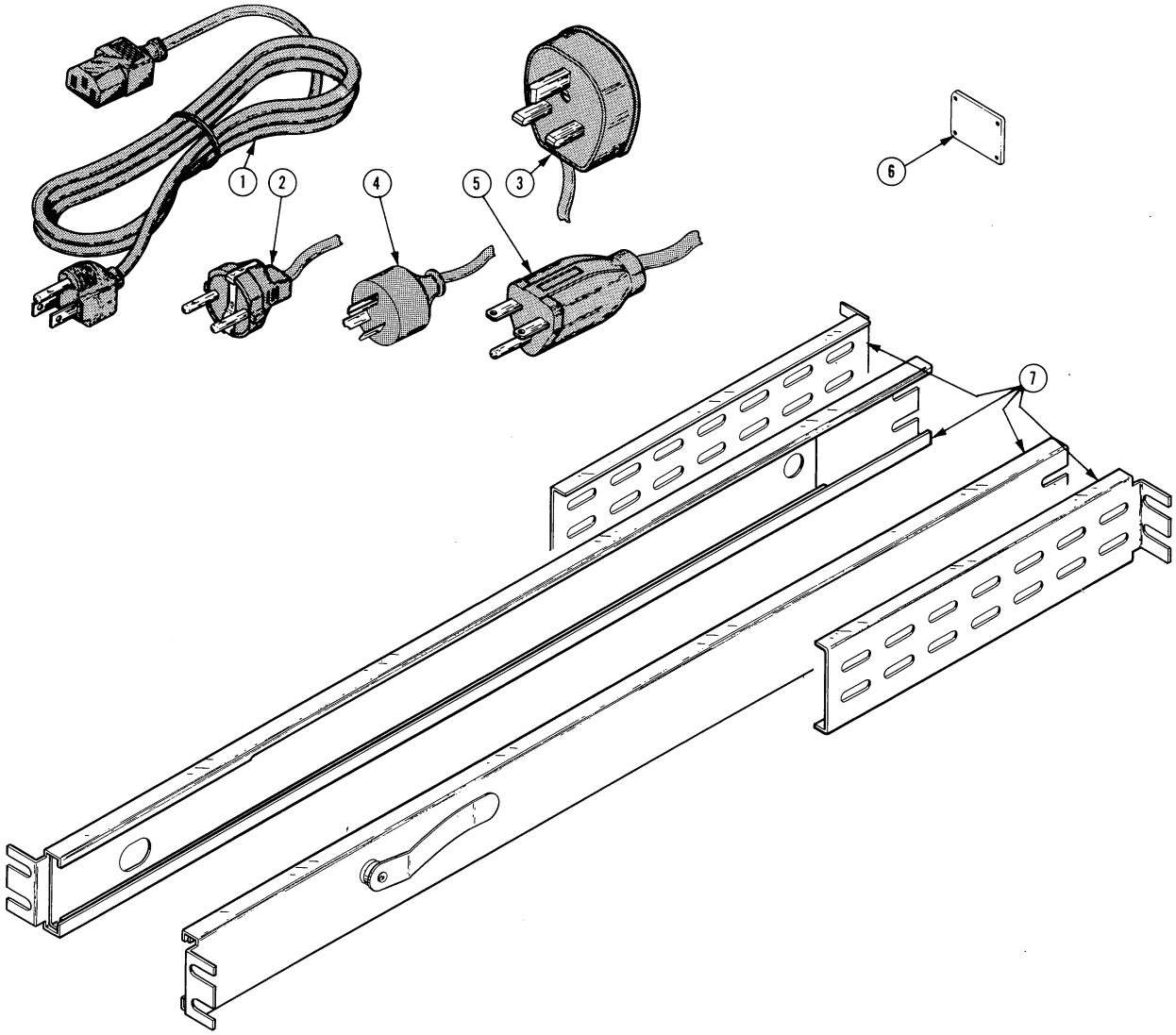

FIG. 2 ACCESSORIES

Fig. & Index No.	Tektronix Part No.	Serial/Model No. Eff	Dscont	Qty	1 2 3 4 5	Name & Description	Mfr Code	Mfr Part Number
2-1	161-0066-00			1		CABLE ASSY,PWR,:3,18 AWG,115V,98.0 L	16428	KH8481
-2	161-0066-09	B090638		1		CABLE ASSY,PWR:3,0.75MM SQ,220V,96.0 L	80126	OBD
	----- -----			-		(A1 EUROPEAN ONLY)		
-3	161-0066-10	B090638		1		CABLE ASSY,PWR:3,0.75MM SQ,240V,96.0 L	80126	OBD
	----- -----			-		(A2 UNITED KINGDOM ONLY)		
-4	161-0066-11	B090638		1		CABLE ASSY,PWR:3,0.75MM,240V,96.0L	S3109	OBD
	----- -----			-		(A3 AUSTRALIAN ONLY)		
-5	161-0066-12	B090638		1		CABLE ASSY,PWR:3,18 AWG,240V,96.0 L	80126	OBD
	----- -----			-		(A4 NORTH AMERICAN ONLY)		
-6	200-1481-00			1		COVER,FRONT PNL:PROGRAM	80009	200-1481-00
-7	351-0331-03			PR		SLIDE,DWR,EXT:PAIR	80009	351-0331-03
	070-1455-00			1		MANUAL		

MANUAL CHANGE INFORMATION

At Tektronix, we continually strive to keep up with latest electronic developments by adding circuit and component improvements to our instruments as soon as they are developed and tested.

Sometimes, due to printing and shipping requirements, we can't get these changes immediately into printed manuals. Hence, your manual may contain new change information on following pages.

A single change may affect several sections. Since the change information sheets are carried in the manual until all changes are permanently entered, some duplication may occur. If no such change pages appear following this page, your manual is correct as printed.

Tektronix®
COMMITTED TO EXCELLENCE

MANUAL CHANGE INFORMATION

Date: 2-11-81 Change Reference: C100/281

Product: GENERAL Manual Part No.: GENERAL

DESCRIPTION

WARNING

During rackmount installation, interchanging the left and right slide-out track assemblies defeats the extension stop (safety latch) feature of the tracks. Equipment could, when extended, come out of the slides and fall from the rack, possibly causing personal injury and equipment damage.

When mounting the supplied slide-out tracks, inspect both assemblies to find the LH (left hand) and RH (right hand) designations to determine correct placement. Install the LH assembly to your left side as you face the front of the rack and install the RH assembly to your right side. Refer to the rackmounting instructions in this manual for complete information.

Tektronix
COMMITTED TO EXCELLENCE

MANUAL CHANGE INFORMATION

Group Code 20

Date: 4-10-86

Change Reference: M58915

Product: 1430

Manual Part No: 070-1455-00

DESCRIPTION

1430 EFF SNB101003

ELECTRICAL PARTS LIST AND SCHEMATIC CHANGES

CHANGE TO READ:

A3 670-2291-01 CKT BD ASSY: PROGRAM

SEE BELOW FOR WIRING CHANGE: DIAGRAM 2 PARTIAL