Tektronix®
COMMITTED TO EXCELLENCE

WARNING

THE FOLLOWING SERVICING INSTRUCTIONS ARE FOR USE BY QUALIFIED PERSONNEL ONLY. TO AVOID PERSONAL INJURY, DO NOT PERFORM ANY SERVICING OTHER THAN THAT CONTAINED IN OPERATING INSTRUCTIONS UNLESS YOU ARE QUALIFIED TO DO SO. REFER TO OPERATORS SAFETY SUMMARY AND SERVICE SAFETY SUMMARY PRIOR TO PERFORMING ANY SERVICE.

PLEASE CHECK FOR CHANGE INFORMATION AT THE REAR OF THIS MANUAL.

067-1363-99

ULU PROGRAMMABLE PLUG-IN
FOR
RTD 710 DIGITIZER

Service Manual

INSTRUCTION MANUAL

Tektronix, Inc.
P.O. Box 500
Beaverton, Oregon 97077

Part No. 061-3566-00
Product Group 45

Serial Number _____

First Printing FEB 1988

Table of Contents

List of Illustrations

List of Tables

Section 1

Introduction

This manual includes the information required to use and maintain the ULU Programmable Plug-In for the RTD-710 (067-1363-99) (referred to in this manual as the 710 Plug-In) for testing the RTD-710 Power Supply. For these tests, the 710 Plug-In is installed in the Universal Load Unit (067-0883-99) (referred to in this manual as the ULU).

RELATED DOCUMENTATION

Access to, and familiarity with, the following documents are necessary for efficient use of the 710 Plug-In:

* 067-0833-99 Universal Load Unit Instruction Manual
  This manual describes to the characteristics, operation, and maintenance of the ULU.

* RTD-710 Digitizer Service Manual
  This manual includes the characteristics, operation, and maintenance of the power supply.

710 PLUG-IN DESCRIPTION

The 710 Plug-In is an optional accessory to the ULU. It functions as a custom interface that allows connection of the RTD-710 Power Supply to the ULU for purposes of load testing the power supply. It consists of a plug-in module, a cable assembly (012-1262-00), and an interconnect accessory (011-0146-00), as described in the following paragraphs.

Plug-In Module

The plug-in module is a Tektronix metal framework plug-in box that encloses a 13-channel program circuit board. It is 2.48 inches wide, 4.54 inches high, and 13.5 inches deep; the front panel is blank except for the pull-to-release handle. The edge connector on the enclosed circuit board protrudes through the rear of the box and functions as the mating electrical connector when the 710 Plug-In is installed in the ULU.

Specific capability for testing a particular device is allowed by tailoring (programming) the circuit board. This

programming is done through the use of precision resistors that are selected and installed when the circuit board is manufactured. Only Channels 1 through 5 and 7 through 11 are programmed for testing the RTD-710 Power Supply (Channels 6, 12, and 13 are not used). The values for the resistors are shown in Table 1.

Table 1-1. Circuit Board Programming.

Part A. Channels 1 through 5					
Item	Specification				
Channel	1	2	3	4	5
Voltage(V)	+15	+5	+5	+5	+59.2
Low Load(A)	0.7	7.8	3.2	2.0	10 m
High Load(A)	1.5	17.6	7.4	3.5	17 m
Rfl(Kohms)	500	15.8	15.4	24.9	
Rfh(Kohms)	243	6.81	6.65	14.3	
Rpl(ohms)					2.0 M
Rph(ohms)					1.13M
Rcomp(Kohms)	15	5	5	5	59.2
Rdes(Kohms)	<----------open---------->				
Out of Regulation Tolerance	±4.5	±8.5	±8.5	±8.5	±3.0

Part B. Channels 7 through 11					
Item	Specification				
Channel	7	8	9	10	11
Voltage(V)	-5	-2	-15	-5	-59.2
Low Load(A)	7.5	2.0	0.7	0.3	10 m
High Load(A)	16	7.5	1.2	1.0	17 m
Rfl(Kohms)	16.5	24.9	210	165	
Rfh(Kohms)	7.5	6.34	124	46.9	
Rpl(ohms)					2.0 M
Rph(ohms)					1.13M
Rcomp(Kohms)	5	2	15	5	59.2
Rdes(Kohms)	<----------open---------->				
Out of Regulation Tolerance	±8.5	±17.5	±4.5	±8.5	±3.0

Cable

The cable included with the plug-in is a multiple conductor/multiple connector harness that is fabricated specifically to connect the ULU to the RTD-710 Power Supply.

Interconnect Accessory

The interconnect accessory is a special-purpose, 50-ohm probe normalizer.

TEST EQUIPMENT REQUIRED

When testing the RTD-710 Power Supply using the 710 Plug-In and the ULU, certain specific items of test equipment are required. These are listed in Table 1-2.

Table 1-2. Test Equipment Required.

Item/Requirement	Suggested Make/Model
Digital Oscilloscope 1 ms/div sweep rate, 20-MHz BWL	Tektronix 2430, or equivalent
Digital Volt Meter 0.03% accuracy	Tektronix DM5010, or equivalent
Variable Auto Transformer (with voltmeter) 4 A at 90 to 132 V	Technipower Variac, Model W10MT3W (Tektronix part 006-5954-00), or equivalent
Digital Volt Meter Test Lead	Tektronix part 003-0120-00, or equivalent
X10 Oscilloscope Probes (2)	Tektronix P6131, or equivalent
Isolation Transformer	Stancor Model GIS1000 (Tektronix part 006-5953-00)

NOTE

In this manual:

* the Digital Oscilloscope is referred to as the Test Oscilloscope,

* the Digital Volt Meter is referred to as the DVM,

and

* the Variable Auto Transformer is referred to as the VAT.

Section 2

Installation and Set-Up

This section contains information required to install and set up the 710 Plug-In and the ULU for operation in testing the RTD-710 Power Supply.

PROCEDURE

Install and set up the 710 Plug-In as follows:

1. Install the 710 Plug-In into the ULU front panel compartment.

2. Connect the cable harness (as indicated by the designations on the harness connectors) to the three rear panel connectors on the ULU (J1, J2, and J3) and the four connectors on the RTD-710 Power Supply (J842, J864, J868, and J870). (See Figure 2-1.)

3. Set the ULU front panel controls as listed in Table 2-1.

Table 2-1. ULU Preliminary Front Panel Settings.

Control	Setting
MAX/MIN switches (12)	MIN (down)
LOAD SELECT switches	IND and SWITCH (down)
VOLTAGE/CURRENT switch	VOLTAGE
CURRENT ADJUST control	midrange, with push-pull switch pushed in
OVER VOLTAGE TEST control	ccw detent.

4. Connect the power source to the ULU and to the Variable Auto Transformer (VAT). Then connect the power cable from the output of the VAT to the RTD-710 Power Supply.

5. Set the output amplitude of the VAT to 100 V and turn on the ULU POWER switch and the RTD-710 PRINCIPAL POWER SWITCH.

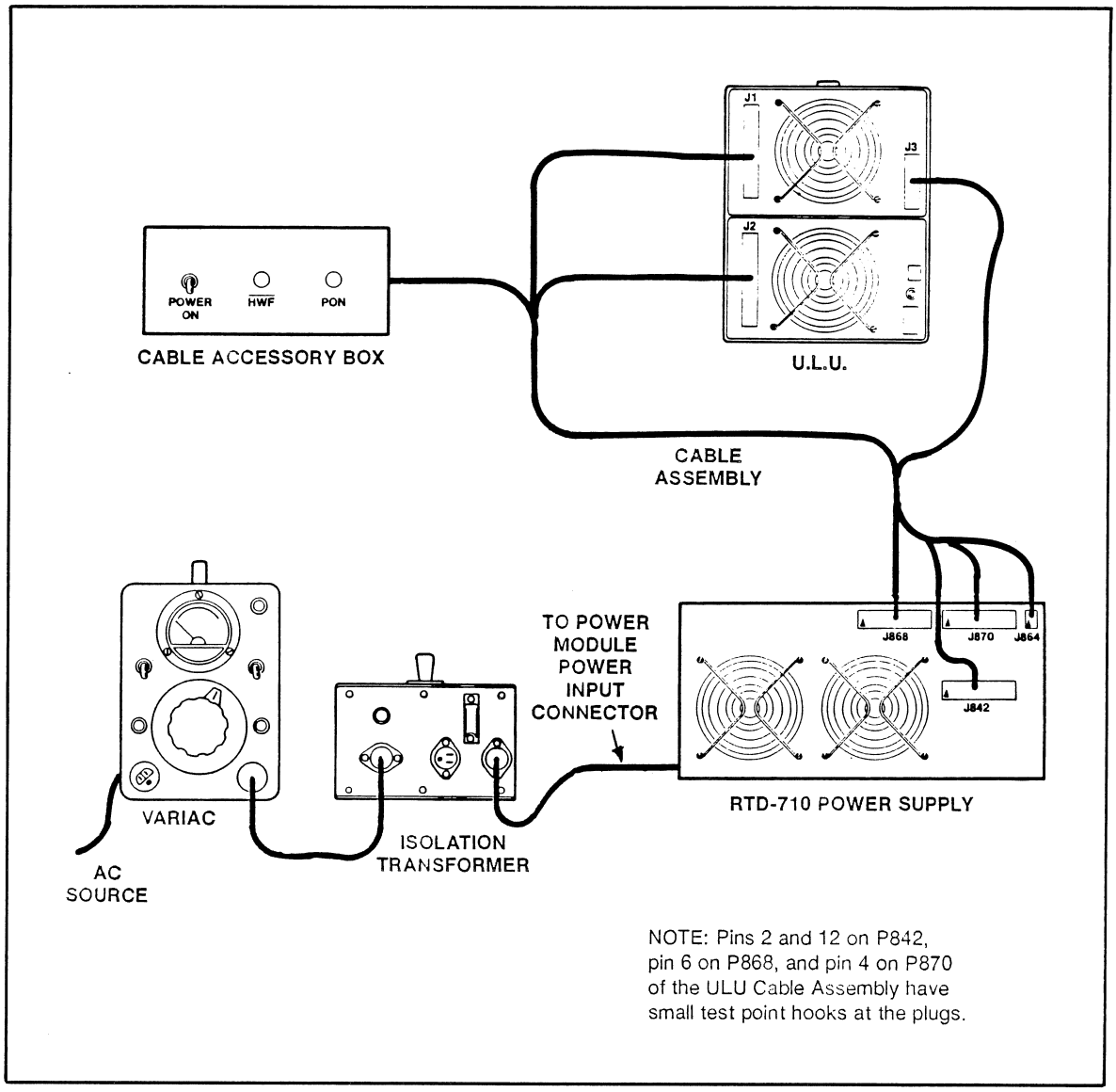

Figure 2-1. ULU/power supply interconnection.

Section 3

Power Supply Tests

This section contains the procedures for testing the RTD-710 Power Supply using the combination of the ULU and the 710 Plug-In.

CHECK 1. HWF SIGNAL TIMING AND +5Vd SUPPLY

Check the HWF signal timing and the +5Vd supply as follows:

1. Set the Test Oscilloscope controls as listed in Table 3-1.

Table 3-1. Check 1 Test Oscilloscope Set-Up A.

Control	Setting
CH-1 and CH-2 Vertical Sensitivity	0.2 V/div
CH-1 and CH-2 Input Coupling	DC
Time Base	50 ms/div
Vertical Mode	CH1 and CH2
Trigger Mode	SINGLE SEQ
Trigger Source	CHAN 1
Trigger Coupling	AC
Trigger Slope	+ (positive)
Trigger Level	2.0 V

2. Connect the Test Oscilloscope CH-1 vertical input X10 probe to pin 6 (+5VdS) of P868 on the cable harness.

3. Connect the Test Oscilloscope CH-2 vertical input X10 probe to pin 12 (HWF) of P842 on the cable harness.

4. Press the Test Oscilloscope ACQUIRE button and turn on the cable accessory box power switch.

5. Verify that the delay between the positive-going +5Vd signal (at the +4.75-V level) and the positive-going HWF signal (at the 50% point) is more than 150 ms but less than 400 ms. (See Figure 3-1.) Adjust the Test Oscilloscope horizontal position control to obtain a proper waveform display and use the cursor to measure the time difference.

6. Change the settings of the Test Oscilloscope to those listed in Table 3-2.

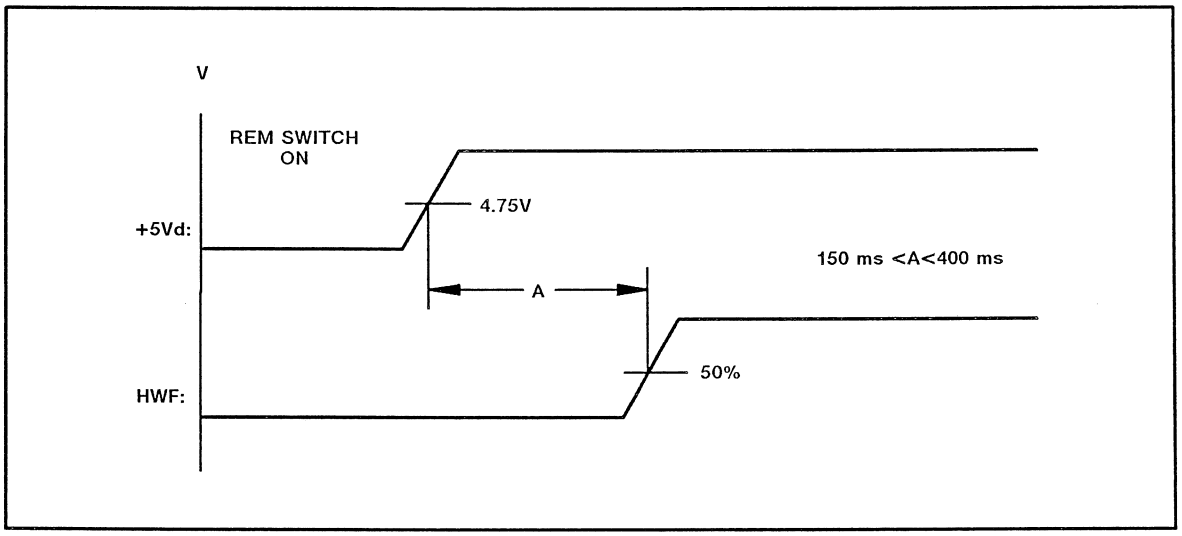

Figure 3-1. HWF delay after power-on.

Table 3-2. Check 1 Test Oscilloscope Set-Up B.

Control	Setting
Time base	5 ms/div
Trigger source	CHAN 2
Trigger slope	- (negative)
Trigger level	1.0 V
Trigger coupling (CPLG menu button)	HF REJECT

7. Press the Test Oscilloscope ACQUIRE button and turn off the cable accessory box power switch.

8. Verify that the delay between the positive-going HWF signal (at the 50% point) and the positive-going +5Vd signal (at the +4.75 V level) is more than 10 ms. (See Figure 3-2.) Adjust the Test Oscilloscope horizontal position control to obtain a proper waveform display and use the cursor to measure the time difference.

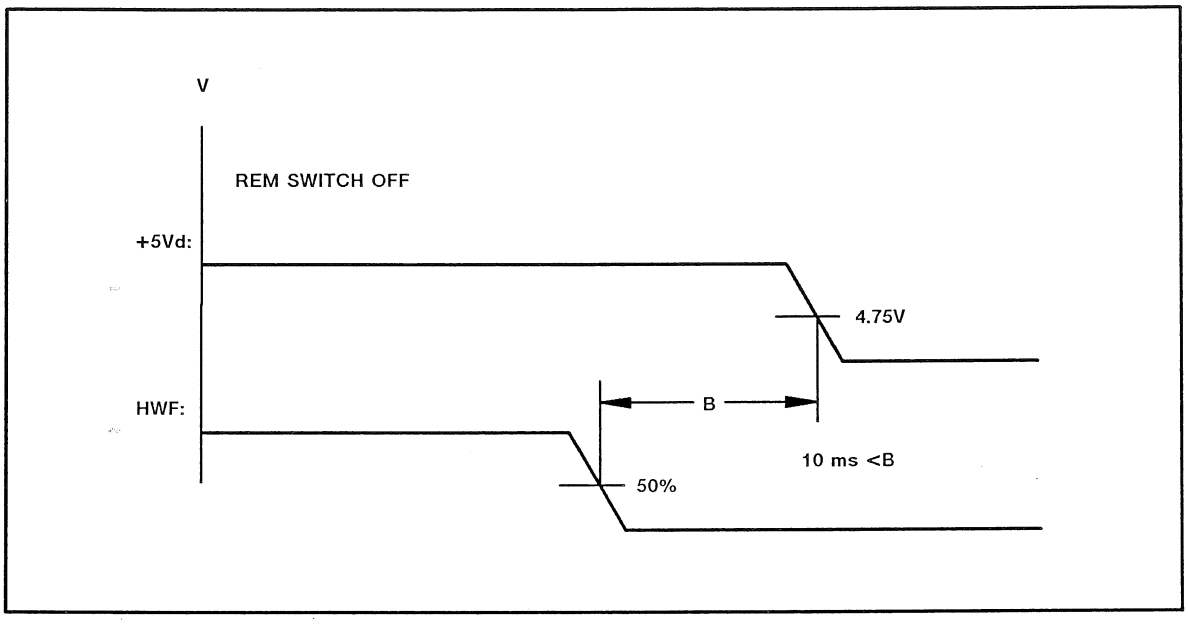

Figure 3-2. +5Vd delay after power-off.

NOTE

It is important to allow enough time for the power-down sequence after turning the RTD-710 Power Supply power off. This sequence requires +5Vd power for at least 10 ms.

10. Remove X10 probes.

11. Turn on cable accessory box power switch.

CHECK 2. +5Vd, -5Vd, AND +5V1 ADJUSTMENT

NOTE

This section defines pre-adjustment procedures only. Final adjustments should be accomplished as outlined in the RTD-710 Digitizer Instruction Manual.

Check, and set if required, the +5Vd, -5Vd, and +5Vl adjustment as follows:

1. Set the DVM FUNCTION control DC VOLTS and the RANGE control to AUTO.

2. Connect the DVM Hi lead to pin 6 (+5VdS) of P868 on the cable harness and the Lo lead to chassis ground.

3. Verify that the DVM indicates +5.00 V. If necessary, adjust RTD-710 Power Supply potentiometer R401 for the correct indication.

4. Disconnect the DVM Hi lead and reconnect it to pin 4 (-5VdS) of P870 on the cable harness.

5. Verify that the DVM indicates -5.00 V. If necessary, adjust RTD-710 Power Supply potentiometer R245 for the correct indication.

6. Disconnect the DVM Hi lead and reconnect it to pin 2 (+59.2 Vl) of P842 on the cable harness.

7. Verify that the DVM indicates +59.2 V. If necessary, adjust RTD-701 Power Supply potentiometer R747 for the correct indication.

8. Disconnect DVM leads.

CHECK 3. ALL POWER SUPPLY VOLTAGES AND RIPPLE

Check the power supply voltages and ripple as follows:

1. Set the ULU controls as listed in Table 3-3.

Table 3-3. Check 3 ULU Set-Up.

Control	Setting
MAX/MIN switches (12)	MIN (down)
LOAD SELECT switches	IND and SWITCH (down)
VOLTAGE/CURRENT switch	VOLTAGE
CURRENT ADJUST control	midrange, with push-pull switch pushed in
OVER VOLTAGE TEST control	ccw detent.

2. Set the Test Oscilloscope controls as listed in Table 3-4.

Table 3-4. Check 3 Test Oscilloscope Set-Up.

Control	Setting
Vertical sensitivity	10 mv/div
Vertical Mode	CH1
Input coupling	AC
Time base	1 ms/div
Trigger Mode	NORMAL
Trigger source	CHAN 1
Trigger coupling	AC
BWL (Bandwidth Limit)	20 MHz

3. Connect a BNC coaxial cable and special probe from the RIPPLE OUT (+) BNC connector of the ULU to the CH-1 input BNC connector of the Test Oscilloscope.

4. Rotate the ULU CHANNEL SELECT switch to each position indicated in Table 3-5.

5. Verify that all of the ULU OUT-OF-REGULATION LED indicators are extinguished.

6. Verify that the voltage and ripple level for each channel remain within the tolerance indicated in Table 3-5 while varying the output voltage of the VAT from 90 to 132.

Table 3-5. Voltage and Ripple Level.

Channel	Voltage	Ripple (P-P)
CH-1	+14.78 to +15.23	10 mV
CH-2	+4.9 to +5.1	50 mV
CH-3	+4.9 to +5.1	50 mV
CH-4	+4.925 to +5.075	10 mV
CH-5	+58.6 to +59.79	5 mV
CH-6	NO READING	
CH-7	-5.1 to -4.9	50 mV
CH-8	-2.2 to -1.8	40 mV
CH-9	-15.23 to -14.78	10 mV
CH-10	-5.075 to -4.925	10 mV
CH-11	-59.78 to -58.6	5 mV
CH-12	NO READING	
CH-13	NO READING	

7. Set the output voltage of the VAT to 100.

8. Remove the DVM leads, BNC coaxial cable, and special probe.

NOTE

The RTD-710 Power Supply may turn off automatically when any of the following operations is done:

a. MAX/MIN switch of CH-2 is changed while LOAD SELECT switches are set to IND and SWITCH.

b. CHANNEL SELECT switch is changed to or from CH-7.

c. MAX/MIN switch of CH-7 is changed while LOAD SELECT switches are set IND and SWITCH.

Once this occurs, power cannot be reapplied unless the power supply PRINCIPAL POWER SWITCH is turned off, then on again.

CHECK 4. OVER-CURRENT PROTECTION

Check the over-current protection as follows:

1. Rotate the ULU CHANNEL SELECT switch to each position (1 through 12) and, for each position except 2 and 3, press the ULU front panel CURRENT LIMIT button.

2. Verify that the RTD-710 Power Supply automatically turns off as the over-current condition is detected on each channel when the CURRENT LIMIT button is pressed. (For informational purposes only, the low and high current specifications of the RTD-710 Power Supply are included in Table 3-6.) Also verify that, five seconds later, the power supply turns on again upon initiation of the automatic recover function.

Table 3-6. RTD-710 Power Supply Current Specifications.

Channel	Voltage	Current Low	Current High
1	+15 V	0.7 A	1.5 A
2	+5Vd	7.8 A	17.6 A
3	+5Vd	3.3 A	7.4 A
4	+5Vl	2.0 A	3.5 A
5	+59.2 V	10 mA	17 mA
7	-5Vd	7.5 A	16 A
8	-2 V	2.0 A	7.5 A
9	-15 V	0.7 A	1.2 A
10	-5Vl	0.3 A	1.0 A
11	-59.2 V	10 mA	17 mA
Note that channels 6, 12, and 13 are not used.			

3. Rotate the ULU CHANNEL SELECT switch to position 2 and press the CURRENT LIMIT button again.

4. Verify that the RTD-710 Power Supply automatically turns off as the over-current condition is detected. However, in this instance, it might not turn on again automatically after five seconds.

NOTE

In such an instance, the power supply may be turned on again by setting the PRINCIPAL POWER SWITCH to off, then to on again.

CHECK 5. OVER-VOLTAGE PROTECTION

CAUTION

Do not attempt to test the Over-Voltage Protection function of the RTD-710 Power Supply. The ULU over-voltage testing sequence might cause damage.

The ULU Over-Voltage Test Circuits cause the output voltage on each channel to increase dramatically. Because the over-voltage detection circuits sense the returning voltage remote line, not the output amplitude, the power supply might attempt to produce a higher voltage output than the setting of its over-voltage protection.

Failure to heed this warning can lead to catastrophic failure of the power supply involved.

REPLACEABLE ELECTRICAL PARTS

PARTS ORDERING INFORMATION

Replacement parts are available from or through your local Tektronix, Inc. Field Office or representative.

Changes to Tektronix instruments are sometimes made to accommodate improved components as they become available, and to give you the benefit of the latest circuit improvements developed in our engineering department. It is therefore important, when ordering parts, to include the following information in your order: Part number, instrument type or number, serial number, and modification number if applicable.

If a part you have ordered has been replaced with a new or improved part, your local Tektronix, Inc. Field Office or representative will contact you concerning any change in part number.

Change information, if any, is located at the rear of this manual.

LIST OF ASSEMBLIES

A list of assemblies can be found at the beginning of the Electrical Parts List. The assemblies are listed in numerical order. When the complete component number of a part is known, this list will identify the assembly in which the part is located.

CROSS INDEX-MFR. CODE NUMBER TO MANUFACTURER

The Mfr. Code Number to Manufacturer index for the Electrical Parts List is located immediately after this page. The Cross Index provides codes, names and addresses of manufacturers of components listed in the Electrical Parts List.

ABBREVIATIONS

Abbreviations conform to American National Standard Y1.1.

COMPONENT NUMBER (column one of the Electrical Parts List)

A numbering method has been used to identify assemblies, subassemblies and parts. Examples of this numbering method and typical expansions are illustrated by the following:

Example a.

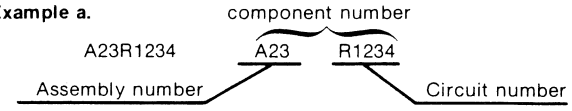

Read: Resistor 1234 of Assembly 23

Example b.

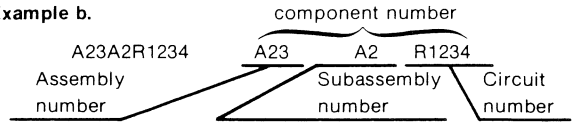

Read: Resistor 1234 of Subassembly 2 of Assembly 23

Only the circuit number will appear on the diagrams and circuit board illustrations. Each diagram and circuit board illustration is clearly marked with the assembly number. Assembly numbers are also marked on the mechanical exploded views located in the Mechanical Parts List. The component number is obtained by adding the assembly number prefix to the circuit number.

The Electrical Parts List is divided and arranged by assemblies in numerical sequence (e.g., assembly A1 with its subassemblies and parts, precedes assembly A2 with its subassemblies and parts).

Chassis-mounted parts have no assembly number prefix and are located at the end of the Electrical Parts List.

TEKTRONIX PART NO. (column two of the Electrical Parts List)

Indicates part number to be used when ordering replacement part from Tektronix.

SERIAL/MODEL NO. (columns three and four of the Electrical Parts List)

Column three (3) indicates the serial number at which the part was first used. Column four (4) indicates the serial number at which the part was removed. No serial number entered indicates part is good for all serial numbers.

NAME & DESCRIPTION (column five of the Electrical Parts List)

In the Parts List, an Item Name is separated from the description by a colon (:). Because of space limitations, an Item Name may sometimes appear as incomplete. For further Item Name identification, the U.S. Federal Cataloging Handbook H6-1 can be utilized where possible.

MFR. CODE (column six of the Electrical Parts List)

Indicates the code number of the actual manufacturer of the part. (Code to name and address cross reference can be found immediately after this page.)

MFR. PART NUMBER (column seven of the Electrical Parts List)

Indicates actual manufacturers part number.

CROSS INDEX - MFR. CODE NUMBER TO MANUFACTURER

Mfg. Code	Manufacturer	Address	City, State, Zip Code
03508	GENERAL ELECTRIC CO SEMI-CONDUCTOR PRODUCTS DEPT	W GENESEE ST	AUBURN NY 13021
03888	PYROFILM DIV DIV OF KDI ELECTRONICS INC	60 S JEFFERSON RD	WHIPPANY NJ 07981-1001
04713	MOTOROLA INC SEMICONDUCTOR PRODUCTS SECTOR	5005 E MCDOWELL RD	PHOENIX AZ 85008-4229
07716	TRW INC TRW IRC FIXED RESISTORS/BURLINGTON	2850 MT PLEASANT AVE	BURLINGTON IA 52601
14193	CAL-R INC	1601 OLYMPIC BLVD PO BOX 1397	SANTA MONICA CA 90406
19701	MEPCO/CENTRALAB A NORTH AMERICAN PHILIPS CO	P O BOX 760	MINERAL WELLS TX 76067-0760
24546	CORNING GLASS WORKS	550 HIGH ST	BRADFORD PA 16701-3737
50434	HEWLETT-PACKARD CO OPTOELECTRONICS DIV	370 W TRIMBLE RD	SAN JOSE CA 95131
57668	R-OHM CORP	16931 MILLIKEN AVE	IRVINE CA 92713
80009	TEKTRONIX INC	14150 SW KARL BRAUM DR PO BOX 500 MS 53-111	BEAVERTON OR 97077
81073	GRAYHILL INC	561 HILLGROVE AVE PO BOX 10373	LA GRANGE IL 60525-5914

Component No.	Tektronix Part No.	Serial Assembly No. Effective	Dscont	Name & Description	Mfr. Code	Mfr. Part No.
A1	----- -----			CIRCUIT BD ASSY:PROGRAM (NOT AVAILABLE)		
A1RCOMP1	321-0305-00			RES,FXD,FILM:14.7K OHM,1%,0.125W,TC=T0	19701	5033ED14K70F
A1RCOMP10	321-0816-00			RES,FXD,FILM:5K OHM,1%,0.125W,TC=T0	24546	NA55D5001F
A1RCOMP11	321-0363-00			RES,FXD,FILM:59.0K OHM,1%,0.125W,TC=T0	07716	CEAD59001F
A1RCOMP2	321-0816-00			RES,FXD,FILM:5K OHM,1%,0.125W,TC=T0	24546	NA55D5001F
A1RCOMP3	321-0816-00			RES,FXD,FILM:5K OHM,1%,0.125W,TC=T0	24546	NA55D5001F
A1RCOMP4	321-0816-00			RES,FXD,FILM:5K OHM,1%,0.125W,TC=T0	24546	NA55D5001F
A1RCOMP5	321-0363-00			RES,FXD,FILM:59.0K OHM,1%,0.125W,TC=T0	07716	CEAD59001F
A1RCOMP7	321-0816-00			RES,FXD,FILM:5K OHM,1%,0.125W,TC=T0	24546	NA55D5001F
A1RCOMP8	321-0222-00			RES,FXD,FILM:2.00K OHM,1%,0.125W,TC=T0	19701	5033ED2K00F
A1RCOMP9	321-0305-00			RES,FXD,FILM:14.7K OHM,1%,0.125W,TC=T0	19701	5033ED14K70F
A1RDES12	321-0000-00			RES,FXD,FILM:FOR INVENTORY PURPOSE ONLY	80009	321-0000-00
A1RDES6	321-0000-00			RES,FXD,FILM:FOR INVENTORY PURPOSE ONLY	80009	321-0000-00
A1RFH1	321-0422-00			RES,FXD,FILM:243K OHM,1%,0.125W,TC=T0	07716	CEAD24302F
A1RFH10	321-0356-00			RES,FXD,FILM:49.9K OHM,1%,0.125W,TC=T0	19701	5033ED49K90F
A1RFH2	321-0273-00			RES,FXD,FILM:6.81K OHM,1%,0.125W,TC=T0	07716	CEAD68100F
A1RFH3	321-0272-00			RES,FXD,FILM:6.65K OHM,1%,0.125W,TC=T0	19701	5043ED6K650F
A1RFH4	321-0304-00			RES,FXD,FILM:14.3K OHM,1%,0.125W,TC=T0	19701	5033ED14K30F
A1RFH7	321-0277-00			RES,FXD,FILM:7.50K OHM,1%,0.125W,TC=T0	24546	NA55D7501F
A1RFH8	321-0270-00			RES,FXD,FILM:6.34K OHM,1%,0.125W,TC=T0	19701	5043ED6K340F
A1RFH9	321-0394-00			RES,FXD,FILM:124K OHM,1%,0.125W,TC=T0	07716	CEAD12402F
A1RFL1	323-0740-00			RES,FXD,FILM:500K OHM,1%,0.5W,TC=T0	80009	323-0740-00
A1RFL10	321-0406-00			RES,FXD,FILM:165K OHM,1%,0.125W,TC=T0	07716	CEAD16502F
A1RFL2	321-0308-00			RES,FXD,FILM:15.8K OHM,1%,0.125W,TC=T0	07716	CEAD 15801F
A1RFL3	321-0307-00			RES,FXD,FILM:15.4K OHM,1%,0.125W,TC=T0	19701	5043ED15K40F
A1RFL4	321-0327-00			RES,FXD,FILM:24.9K OHM,1%,0.125W,TC=T0	07716	CEAD24901F
A1RFL7	321-0310-00			RES,FXD,FILM:16.5K OHM,1%,0.125W,TC=T0	19701	5033ED16K50F
A1RFL8	321-0327-00			RES,FXD,FILM:24.9K OHM,1%,0.125W,TC=T0	07716	CEAD24901F
A1RFL9	321-0416-00			RES,FXD,FILM:210K OHM,1%,0.125W,TC=T0	07716	CEAD21002F
A1RPH11	321-0486-00			RES,FXD,FILM:1.13 MEG OHM,1%,0.125W,T=T0	19701	5033RD1M130F
A1RPH5	321-0486-00			RES,FXD,FILM:1.13 MEG OHM,1%,0.125W,T=T0	19701	5033RD1M130F
A1RPL11	321-0510-00			RES,FXD,FILM:2.00M OHM,1%,0.125W,TC=T0	03888	PME55D20003F
A1RPL5	321-0510-00			RES,FXD,FILM:2.00M OHM,1%,0.125W,TC=T0	03888	PME55D20003F
A1CR5001	152-0141-02			SEMICOND DVC,DI:SW,SI,30V,150MA,30V,DO-35	03508	DA2527 (1N4152)
A1CR5002	152-0141-02			SEMICOND DVC,DI:SW,SI,30V,150MA,30V,DO-35	03508	DA2527 (1N4152)
A1CR5005	152-0141-02			SEMICOND DVC,DI:SW,SI,30V,150MA,30V,DO-35	03508	DA2527 (1N4152)
A1CR5006	152-0141-02			SEMICOND DVC,DI:SW,SI,30V,150MA,30V,DO-35	03508	DA2527 (1N4152)
A1CR5010	152-0141-02			SEMICOND DVC,DI:SW,SI,30V,150MA,30V,DO-35	03508	DA2527 (1N4152)
A1CR5011	152-0141-02			SEMICOND DVC,DI:SW,SI,30V,150MA,30V,DO-35	03508	DA2527 (1N4152)
A1CR5015	152-0141-02			SEMICOND DVC,DI:SW,SI,30V,150MA,30V,DO-35	03508	DA2527 (1N4152)
A1CR5016	152-0141-02			SEMICOND DVC,DI:SW,SI,30V,150MA,30V,DO-35	03508	DA2527 (1N4152)
A1CR5020	152-0141-02			SEMICOND DVC,DI:SW,SI,30V,150MA,30V,DO-35	03508	DA2527 (1N4152)
A1CR5021	152-0141-02			SEMICOND DVC,DI:SW,SI,30V,150MA,30V,DO-35	03508	DA2527 (1N4152)
A1CR5025	152-0141-02			SEMICOND DVC,DI:SW,SI,30V,150MA,30V,DO-35	03508	DA2527 (1N4152)
A1CR5026	152-0141-02			SEMICOND DVC,DI:SW,SI,30V,150MA,30V,DO-35	03508	DA2527 (1N4152)
A1CR5030	152-0141-02			SEMICOND DVC,DI:SW,SI,30V,150MA,30V,DO-35	03508	DA2527 (1N4152)
A1CR5031	152-0141-02			SEMICOND DVC,DI:SW,SI,30V,150MA,30V,DO-35	03508	DA2527 (1N4152)
A1CR5035	152-0141-02			SEMICOND DVC,DI:SW,SI,30V,150MA,30V,DO-35	03508	DA2527 (1N4152)
A1CR5036	152-0141-02			SEMICOND DVC,DI:SW,SI,30V,150MA,30V,DO-35	03508	DA2527 (1N4152)
A1CR5040	152-0141-02			SEMICOND DVC,DI:SW,SI,30V,150MA,30V,DO-35	03508	DA2527 (1N4152)
A1CR5041	152-0141-02			SEMICOND DVC,DI:SW,SI,30V,150MA,30V,DO-35	03508	DA2527 (1N4152)
A1CR5045	152-0141-02			SEMICOND DVC,DI:SW,SI,30V,150MA,30V,DO-35	03508	DA2527 (1N4152)
A1CR5046	152-0141-02			SEMICOND DVC,DI:SW,SI,30V,150MA,30V,DO-35	03508	DA2527 (1N4152)
A1CR5050	152-0141-02			SEMICOND DVC,DI:SW,SI,30V,150MA,30V,DO-35	03508	DA2527 (1N4152)
A1CR5051	152-0141-02			SEMICOND DVC,DI:SW,SI,30V,150MA,30V,DO-35	03508	DA2527 (1N4152)

Component No.	Tektronix Part No.	Serial Assembly No. Effective	Dscont	Name & Description	Mfr. Code	Mfr. Part No.
A1CR5055	152-0141-02			SEMICOND DVC,DI:SW,SI,30V,150MA,30V,DO-35	03508	DA2527 (1N4152)
A1CR5056	152-0141-02			SEMICOND DVC,DI:SW,SI,30V,150MA,30V,DO-35	03508	DA2527 (1N4152)
A1Q5011	151-0188-00			TRANSISTOR:PNP,SI,TO-92	80009	151-0188-00
A1Q5012	151-0188-00			TRANSISTOR:PNP,SI,TO-92	80009	151-0188-00
A1Q5013	151-0190-00			TRANSISTOR:NPN,SI,TO-92	80009	151-0190-00
A1Q5014	151-0190-00			TRANSISTOR:NPN,SI,TO-92	80009	151-0190-00
A1Q5015	151-0443-00			TRANSISTOR:PNP,SI,TO-92	04713	SPS7950
A1Q5016	151-0443-00			TRANSISTOR:PNP,SI,TO-92	04713	SPS7950
A1Q5017	151-0444-00			TRANSISTOR:NPN,SI,TO-92	04713	SPS797
A1Q5018	151-0444-00			TRANSISTOR:NPN,SI,TO-92	04713	SPS797
A1Q5021	151-0188-00			TRANSISTOR:PNP,SI,TO-92	80009	151-0188-00
A1Q5022	151-0188-00			TRANSISTOR:PNP,SI,TO-92	80009	151-0188-00
A1Q5023	151-0190-00			TRANSISTOR:NPN,SI,TO-92	80009	151-0190-00
A1Q5024	151-0190-00			TRANSISTOR:NPN,SI,TO-92	80009	151-0190-00
A1Q5025	151-0443-00			TRANSISTOR:PNP,SI,TO-92	04713	SPS7950
A1Q5026	151-0443-00			TRANSISTOR:PNP,SI,TO-92	04713	SPS7950
A1Q5027	151-0444-00			TRANSISTOR:NPN,SI,TO-92	04713	SPS797
A1Q5028	151-0444-00			TRANSISTOR:NPN,SI,TO-92	04713	SPS797
A1Q5031	151-0188-00			TRANSISTOR:PNP,SI,TO-92	80009	151-0188-00
A1Q5032	151-0188-00			TRANSISTOR:PNP,SI,TO-92	80009	151-0188-00
A1Q5033	151-0190-00			TRANSISTOR:NPN,SI,TO-92	80009	151-0190-00
A1Q5034	151-0190-00			TRANSISTOR:NPN,SI,TO-92	80009	151-0190-00
A1Q5035	151-0443-00			TRANSISTOR:PNP,SI,TO-92	04713	SPS7950
A1Q5036	151-0443-00			TRANSISTOR:PNP,SI,TO-92	04713	SPS7950
A1Q5037	151-0444-00			TRANSISTOR:NPN,SI,TO-92	04713	SPS797
A1Q5038	151-0444-00			TRANSISTOR:NPN,SI,TO-92	04713	SPS797
A1Q5041	151-0188-00			TRANSISTOR:PNP,SI,TO-92	80009	151-0188-00
A1Q5042	151-0188-00			TRANSISTOR:PNP,SI,TO-92	80009	151-0188-00
A1Q5043	151-0190-00			TRANSISTOR:NPN,SI,TO-92	80009	151-0190-00
A1Q5044	151-0190-00			TRANSISTOR:NPN,SI,TO-92	80009	151-0190-00
A1Q5045	151-0443-00			TRANSISTOR:PNP,SI,TO-92	04713	SPS7950
A1Q5046	151-0443-00			TRANSISTOR:PNP,SI,TO-92	04713	SPS7950
A1Q5047	151-0444-00			TRANSISTOR:NPN,SI,TO-92	04713	SPS797
A1Q5048	151-0444-00			TRANSISTOR:NPN,SI,TO-92	04713	SPS797
A1Q5051	151-0188-00			TRANSISTOR:PNP,SI,TO-92	80009	151-0188-00
A1Q5052	151-0188-00			TRANSISTOR:PNP,SI,TO-92	80009	151-0188-00
A1Q5053	151-0190-00			TRANSISTOR:NPN,SI,TO-92	80009	151-0190-00
A1Q5054	151-0190-00			TRANSISTOR:NPN,SI,TO-92	80009	151-0190-00
A1Q5055	151-0443-00			TRANSISTOR:PNP,SI,TO-92	04713	SPS7950
A1Q5056	151-0443-00			TRANSISTOR:PNP,SI,TO-92	04713	SPS7950
A1Q5057	151-0444-00			TRANSISTOR:NPN,SI,TO-92	04713	SPS797
A1Q5058	151-0444-00			TRANSISTOR:NPN,SI,TO-92	04713	SPS797
A1Q5061	151-0188-00			TRANSISTOR:PNP,SI,TO-92	80009	151-0188-00
A1Q5062	151-0188-00			TRANSISTOR:PNP,SI,TO-92	80009	151-0188-00
A1Q5063	151-0190-00			TRANSISTOR:NPN,SI,TO-92	80009	151-0190-00
A1Q5064	151-0190-00			TRANSISTOR:NPN,SI,TO-92	80009	151-0190-00
A1Q5065	151-0443-00			TRANSISTOR:PNP,SI,TO-92	04713	SPS7950
A1Q5066	151-0443-00			TRANSISTOR:PNP,SI,TO-92	04713	SPS7950
A1Q5067	151-0444-00			TRANSISTOR:NPN,SI,TO-92	04713	SPS797
A1Q5068	151-0444-00			TRANSISTOR:NPN,SI,TO-92	04713	SPS797
A1Q5071	151-0188-00			TRANSISTOR:PNP,SI,TO-92	80009	151-0188-00
A1Q5072	151-0188-00			TRANSISTOR:PNP,SI,TO-92	80009	151-0188-00
A1Q5073	151-0190-00			TRANSISTOR:NPN,SI,TO-92	80009	151-0190-00
A1Q5074	151-0190-00			TRANSISTOR:NPN,SI,TO-92	80009	151-0190-00
A1Q5075	151-0444-00			TRANSISTOR:NPN,SI,TO-92	04713	SPS797

Component No.	Tektronix Part No.	Serial Assembly No. Effective	Dscont	Name & Description	Mfr. Code	Mfr. Part No.
A1Q5076	151-0444-00			TRANSISTOR:NPN,SI,TO-92	04713	SPS797
A1Q5077	151-0443-00			TRANSISTOR:PNP,SI,TO-92	04713	SPS7950
A1Q5078	151-0443-00			TRANSISTOR:PNP,SI,TO-92	04713	SPS7950
A1Q5081	151-0188-00			TRANSISTOR:PNP,SI,TO-92	80009	151-0188-00
A1Q5082	151-0188-00			TRANSISTOR:PNP,SI,TO-92	80009	151-0188-00
A1Q5083	151-0190-00			TRANSISTOR:NPN,SI,TO-92	80009	151-0190-00
A1Q5084	151-0190-00			TRANSISTOR:NPN,SI,TO-92	80009	151-0190-00
A1Q5085	151-0444-00			TRANSISTOR:NPN,SI,TO-92	04713	SPS797
A1Q5086	151-0444-00			TRANSISTOR:NPN,SI,TO-92	04713	SPS797
A1Q5087	151-0443-00			TRANSISTOR:PNP,SI,TO-92	04713	SPS7950
A1Q5088	151-0443-00			TRANSISTOR:PNP,SI,TO-92	04713	SPS7950
A1Q5091	151-0188-00			TRANSISTOR:PNP,SI,TO-92	80009	151-0188-00
A1Q5092	151-0188-00			TRANSISTOR:PNP,SI,TO-92	80009	151-0188-00
A1Q5093	151-0190-00			TRANSISTOR:NPN,SI,TO-92	80009	151-0190-00
A1Q5094	151-0190-00			TRANSISTOR:NPN,SI,TO-92	80009	151-0190-00
A1Q5095	151-0444-00			TRANSISTOR:NPN,SI,TO-92	04713	SPS797
A1Q5096	151-0444-00			TRANSISTOR:NPN,SI,TO-92	04713	SPS797
A1Q5097	151-0443-00			TRANSISTOR:PNP,SI,TO-92	04713	SPS7950
A1Q5098	151-0443-00			TRANSISTOR:PNP,SI,TO-92	04713	SPS7950
A1Q5101	151-0188-00			TRANSISTOR:PNP,SI,TO-92	80009	151-0188-00
A1Q5102	151-0188-00			TRANSISTOR:PNP,SI,TO-92	80009	151-0188-00
A1Q5103	151-0190-00			TRANSISTOR:NPN,SI,TO-92	80009	151-0190-00
A1Q5104	151-0190-00			TRANSISTOR:NPN,SI,TO-92	80009	151-0190-00
A1Q5105	151-0444-00			TRANSISTOR:NPN,SI,TO-92	04713	SPS797
A1Q5106	151-0444-00			TRANSISTOR:NPN,SI,TO-92	04713	SPS797
A1Q5107	151-0443-00			TRANSISTOR:PNP,SI,TO-92	04713	SPS7950
A1Q5108	151-0443-00			TRANSISTOR:PNP,SI,TO-92	04713	SPS7950
A1Q5111	151-0188-00			TRANSISTOR:PNP,SI,TO-92	80009	151-0188-00
A1Q5112	151-0188-00			TRANSISTOR:PNP,SI,TO-92	80009	151-0188-00
A1Q5113	151-0190-00			TRANSISTOR:NPN,SI,TO-92	80009	151-0190-00
A1Q5114	151-0190-00			TRANSISTOR:NPN,SI,TO-92	80009	151-0190-00
A1Q5115	151-0444-00			TRANSISTOR:NPN,SI,TO-92	04713	SPS797
A1Q5116	151-0444-00			TRANSISTOR:NPN,SI,TO-92	04713	SPS797
A1Q5117	151-0443-00			TRANSISTOR:PNP,SI,TO-92	04713	SPS7950
A1Q5118	151-0443-00			TRANSISTOR:PNP,SI,TO-92	04713	SPS7950
A1Q5121	151-0188-00			TRANSISTOR:PNP,SI,TO-92	80009	151-0188-00
A1Q5122	151-0188-00			TRANSISTOR:PNP,SI,TO-92	80009	151-0188-00
A1Q5123	151-0190-00			TRANSISTOR:NPN,SI,TO-92	80009	151-0190-00
A1Q5124	151-0190-00			TRANSISTOR:NPN,SI,TO-92	80009	151-0190-00
A1Q5125	151-0444-00			TRANSISTOR:NPN,SI,TO-92	04713	SPS797
A1Q5126	151-0444-00			TRANSISTOR:NPN,SI,TO-92	04713	SPS797
A1Q5127	151-0443-00			TRANSISTOR:PNP,SI,TO-92	04713	SPS7950
A1Q5128	151-0443-00			TRANSISTOR:PNP,SI,TO-92	04713	SPS7950
A1R5001	321-0289-00			RES,FXD,FILM:10.0K OHM,1%,0.125W,TC=T0	19701	5033ED10K0F
A1R5002	321-0289-00			RES,FXD,FILM:10.0K OHM,1%,0.125W,TC=T0	19701	5033ED10K0F
A1R5003	321-0200-00			RES,FXD,FILM:1.18K OHM,1%,0.125W,TC=T0	19701	5033ED11K80F
A1R5004	321-0220-00			RES,FXD,FILM:1.91K OHM,1%,0.125W,TC=T0	19701	5033ED1K91F
A1R5005	315-0822-00			RES,FXD,FILM:8.2K OHM,5%,0.25W	19701	5043CX8K200J
A1R5007	315-0202-00			RES,FXD,FILM:2K OHM,5%,0.25W	57668	NTR25J-E 2K
A1R5008	321-0222-00			RES,FXD,FILM:2.00K OHM,1%,0.125W,TC=T0	19701	5033ED2K00F
A1R5009	321-0280-00			RES,FXD,FILM:8.06K OHM,1%,0.125W,TC=T0	19701	5033ED8K060F
A1R5010	315-0103-00			RES,FXD,FILM:10K OHM,5%,0.25W	19701	5043CX10K00J
A1R5012	315-0103-00			RES,FXD,FILM:10K OHM,5%,0.25W	19701	5043CX10K00J
A1R5014	315-0102-00			RES,FXD,FILM:1K OHM,5%,0.25W	57668	NTR25JE01K0
A1R5015	315-0563-00			RES,FXD,FILM:56K OHM,5%,0.25W	19701	5043CX56K00J

Component No.	Tektronix Part No.	Serial Assembly No. Effective	Dscont	Name & Description	Mfr. Code	Mfr. Part No.
A1R5016	315-0562-00			RES,FXD,FILM:5.6K OHM,5%,0.25W	57668	NTR25J-E05K6
A1R5017	315-0511-00			RES,FXD,FILM:510 OHM,5%,0.25W	19701	5043CX510R0J
A1R5018	321-0289-00			RES,FXD,FILM:10.0K OHM,1%,0.125W,TC=T0	19701	5033ED10K0F
A1R5019	321-0289-00			RES,FXD,FILM:10.0K OHM,1%,0.125W,TC=T0	19701	5033ED10K0F
A1R5020	321-0200-00			RES,FXD,FILM:1.18K OHM,1%,0.125W,TC=T0	19701	5033ED11K80F
A1R5022	321-0220-00			RES,FXD,FILM:1.91K OHM,1%,0.125W,TC=T0	19701	5033ED1K91F
A1R5023	315-0822-00			RES,FXD,FILM:8.2K OHM,5%,0.25W	19701	5043CX8K200J
A1R5024	315-0202-00			RES,FXD,FILM:2K OHM,5%,0.25W	57668	NTR25J-E 2K
A1R5025	321-0222-00			RES,FXD,FILM:2.00K OHM,1%,0.125W,TC=T0	19701	5033ED2K00F
A1R5027	321-0280-00			RES,FXD,FILM:8.06K OHM,1%,0.125W,TC=T0	19701	5033ED8K060F
A1R5028	315-0103-00			RES,FXD,FILM:10K OHM,5%,0.25W	19701	5043CX10K00J
A1R5030	315-0103-00			RES,FXD,FILM:10K OHM,5%,0.25W	19701	5043CX10K00J
A1R5031	315-0102-00			RES,FXD,FILM:1K OHM,5%,0.25W	57668	NTR25JE01K0
A1R5032	315-0563-00			RES,FXD,FILM:56K OHM,5%,0.25W	19701	5043CX56K00J
A1R5035	321-0289-00			RES,FXD,FILM:10.0K OHM,1%,0.125W,TC=T0	19701	5033ED10K0F
A1R5036	321-0289-00			RES,FXD,FILM:10.0K OHM,1%,0.125W,TC=T0	19701	5033ED10K0F
A1R5037	321-0200-00			RES,FXD,FILM:1.18K OHM,1%,0.125W,TC=T0	19701	5033ED11K80F
A1R5039	321-0220-00			RES,FXD,FILM:1.91K OHM,1%,0.125W,TC=T0	19701	5033ED1K91F
A1R5040	315-0822-00			RES,FXD,FILM:8.2K OHM,5%,0.25W	19701	5043CX8K200J
A1R5041	315-0202-00			RES,FXD,FILM:2K OHM,5%,0.25W	57668	NTR25J-E 2K
A1R5042	321-0222-00			RES,FXD,FILM:2.00K OHM,1%,0.125W,TC=T0	19701	5033ED2K00F
A1R5044	321-0280-00			RES,FXD,FILM:8.06K OHM,1%,0.125W,TC=T0	19701	5033ED8K060F
A1R5045	315-0103-00			RES,FXD,FILM:10K OHM,5%,0.25W	19701	5043CX10K00J
A1R5047	315-0103-00			RES,FXD,FILM:10K OHM,5%,0.25W	19701	5043CX10K00J
A1R5048	315-0102-00			RES,FXD,FILM:1K OHM,5%,0.25W	57668	NTR25JE01K0
A1R5049	315-0563-00			RES,FXD,FILM:56K OHM,5%,0.25W	19701	5043CX56K00J
A1R5051	321-0289-00			RES,FXD,FILM:10.0K OHM,1%,0.125W,TC=T0	19701	5033ED10K0F
A1R5052	321-0289-00			RES,FXD,FILM:10.0K OHM,1%,0.125W,TC=T0	19701	5033ED10K0F
A1R5053	321-0200-00			RES,FXD,FILM:1.18K OHM,1%,0.125W,TC=T0	19701	5033ED11K80F
A1R5054	321-0220-00			RES,FXD,FILM:1.91K OHM,1%,0.125W,TC=T0	19701	5033ED1K91F
A1R5055	315-0822-00			RES,FXD,FILM:8.2K OHM,5%,0.25W	19701	5043CX8K200J
A1R5056	315-0202-00			RES,FXD,FILM:2K OHM,5%,0.25W	57668	NTR25J-E 2K
A1R5057	321-0222-00			RES,FXD,FILM:2.00K OHM,1%,0.125W,TC=T0	19701	5033ED2K00F
A1R5059	321-0280-00			RES,FXD,FILM:8.06K OHM,1%,0.125W,TC=T0	19701	5033ED8K060F
A1R5060	315-0103-00			RES,FXD,FILM:10K OHM,5%,0.25W	19701	5043CX10K00J
A1R5062	315-0103-00			RES,FXD,FILM:10K OHM,5%,0.25W	19701	5043CX10K00J
A1R5063	315-0102-00			RES,FXD,FILM:1K OHM,5%,0.25W	57668	NTR25JE01K0
A1R5064	315-0563-00			RES,FXD,FILM:56K OHM,5%,0.25W	19701	5043CX56K00J
A1R5066	321-0289-00			RES,FXD,FILM:10.0K OHM,1%,0.125W,TC=T0	19701	5033ED10K0F
A1R5067	321-0289-00			RES,FXD,FILM:10.0K OHM,1%,0.125W,TC=T0	19701	5033ED10K0F
A1R5068	321-0200-00			RES,FXD,FILM:1.18K OHM,1%,0.125W,TC=T0	19701	5033ED11K80F
A1R5069	321-0220-00			RES,FXD,FILM:1.91K OHM,1%,0.125W,TC=T0	19701	5033ED1K91F
A1R5070	315-0822-00			RES,FXD,FILM:8.2K OHM,5%,0.25W	19701	5043CX8K200J
A1R5071	315-0202-00			RES,FXD,FILM:2K OHM,5%,0.25W	57668	NTR25J-E 2K
A1R5072	321-0222-00			RES,FXD,FILM:2.00K OHM,1%,0.125W,TC=T0	19701	5033ED2K00F
A1R5074	321-0280-00			RES,FXD,FILM:8.06K OHM,1%,0.125W,TC=T0	19701	5033ED8K060F
A1R5075	315-0103-00			RES,FXD,FILM:10K OHM,5%,0.25W	19701	5043CX10K00J
A1R5077	315-0103-00			RES,FXD,FILM:10K OHM,5%,0.25W	19701	5043CX10K00J
A1R5078	315-0102-00			RES,FXD,FILM:1K OHM,5%,0.25W	57668	NTR25JE01K0
A1R5079	315-0563-00			RES,FXD,FILM:56K OHM,5%,0.25W	19701	5043CX56K00J
A1R5081	321-0289-00			RES,FXD,FILM:10.0K OHM,1%,0.125W,TC=T0	19701	5033ED10K0F
A1R5082	321-0289-00			RES,FXD,FILM:10.0K OHM,1%,0.125W,TC=T0	19701	5033ED10K0F
A1R5083	321-0200-00			RES,FXD,FILM:1.18K OHM,1%,0.125W,TC=T0	19701	5033ED11K80F
A1R5084	321-0220-00			RES,FXD,FILM:1.91K OHM,1%,0.125W,TC=T0	19701	5033ED1K91F
A1R5085	315-0822-00			RES,FXD,FILM:8.2K OHM,5%,0.25W	19701	5043CX8K200J

Component No.	Tektronix Part No.	Serial Assembly No. Effective	Dscont	Name & Description	Mfr. Code	Mfr. Part No.
A1R5086	315-0202-00			RES,FXD,FILM:2K OHM,5%,0.25W	57668	NTR25J-E 2K
A1R5087	321-0222-00			RES,FXD,FILM:2.00K OHM,1%,0.125W,TC=T0	19701	5033ED2K00F
A1R5089	321-0280-00			RES,FXD,FILM:8.06K OHM,1%,0.125W,TC=T0	19701	5033ED8K060F
A1R5090	315-0103-00			RES,FXD,FILM:10K OHM,5%,0.25W	19701	5043CX10K00J
A1R5092	315-0103-00			RES,FXD,FILM:10K OHM,5%,0.25W	19701	5043CX10K00J
A1R5093	315-0102-00			RES,FXD,FILM:1K OHM,5%,0.25W	57668	NTR25JE01K0
A1R5094	315-0563-00			RES,FXD,FILM:56K OHM,5%,0.25W	19701	5043CX56K00J
A1R5096	308-0643-00			RES,FXD,WW:0.10 OHM,3%,3W	14193	SA31 R100H
A1R5100	315-0103-00			RES,FXD,FILM:10K OHM,5%,0.25W	19701	5043CX10K00J
A1R5101	315-0103-00			RES,FXD,FILM:10K OHM,5%,0.25W	19701	5043CX10K00J
A1R5102	315-0302-00			RES,FXD,FILM:3K OHM,5%,0.25W	57668	NTR25J-E03K0
A1R5104	315-0202-00			RES,FXD,FILM:2K OHM,5%,0.25W	57668	NTR25J-E 2K
A1R5105	315-0302-00			RES,FXD,FILM:3K OHM,5%,0.25W	57668	NTR25J-E03K0
A1R5106	321-0200-00			RES,FXD,FILM:1.18K OHM,1%,0.125W,TC=T0	19701	5033ED11K80F
A1R5107	315-0912-00			RES,FXD,FILM:9.1K OHM,5%,0.25W	57668	NTR25J-E09K1
A1R5108	321-0220-00			RES,FXD,FILM:1.91K OHM,1%,0.125W,TC=T0	19701	5033ED1K91F
A1R5109	321-0289-00			RES,FXD,FILM:10.0K OHM,1%,0.125W,TC=T0	19701	5033ED10K0F
A1R5111	321-0289-00			RES,FXD,FILM:10.0K OHM,1%,0.125W,TC=T0	19701	5033ED10K0F
A1R5112	315-0102-00			RES,FXD,FILM:1K OHM,5%,0.25W	57668	NTR25JE01K0
A1R5114	315-0563-00			RES,FXD,FILM:56K OHM,5%,0.25W	19701	5043CX56K00J
A1R5116	315-0103-00			RES,FXD,FILM:10K OHM,5%,0.25W	19701	5043CX10K00J
A1R5117	315-0103-00			RES,FXD,FILM:10K OHM,5%,0.25W	19701	5043CX10K00J
A1R5118	315-0302-00			RES,FXD,FILM:3K OHM,5%,0.25W	57668	NTR25J-E03K0
A1R5120	315-0202-00			RES,FXD,FILM:2K OHM,5%,0.25W	57668	NTR25J-E 2K
A1R5121	315-0302-00			RES,FXD,FILM:3K OHM,5%,0.25W	57668	NTR25J-E03K0
A1R5122	321-0200-00			RES,FXD,FILM:1.18K OHM,1%,0.125W,TC=T0	19701	5033ED11K80F
A1R5123	315-0912-00			RES,FXD,FILM:9.1K OHM,5%,0.25W	57668	NTR25J-E09K1
A1R5124	321-0220-00			RES,FXD,FILM:1.91K OHM,1%,0.125W,TC=T0	19701	5033ED1K91F
A1R5125	321-0289-00			RES,FXD,FILM:10.0K OHM,1%,0.125W,TC=T0	19701	5033ED10K0F
A1R5127	321-0289-00			RES,FXD,FILM:10.0K OHM,1%,0.125W,TC=T0	19701	5033ED10K0F
A1R5128	315-0102-00			RES,FXD,FILM:1K OHM,5%,0.25W	57668	NTR25JE01K0
A1R5130	315-0563-00			RES,FXD,FILM:56K OHM,5%,0.25W	19701	5043CX56K00J
A1R5132	315-0103-00			RES,FXD,FILM:10K OHM,5%,0.25W	19701	5043CX10K00J
A1R5133	315-0103-00			RES,FXD,FILM:10K OHM,5%,0.25W	19701	5043CX10K00J
A1R5134	315-0302-00			RES,FXD,FILM:3K OHM,5%,0.25W	57668	NTR25J-E03K0
A1R5136	315-0202-00			RES,FXD,FILM:2K OHM,5%,0.25W	57668	NTR25J-E 2K
A1R5137	315-0302-00			RES,FXD,FILM:3K OHM,5%,0.25W	57668	NTR25J-E03K0
A1R5138	321-0200-00			RES,FXD,FILM:1.18K OHM,1%,0.125W,TC=T0	19701	5033ED11K80F
A1R5139	315-0912-00			RES,FXD,FILM:9.1K OHM,5%,0.25W	57668	NTR25J-E09K1
A1R5140	321-0220-00			RES,FXD,FILM:1.91K OHM,1%,0.125W,TC=T0	19701	5033ED1K91F
A1R5141	321-0289-00			RES,FXD,FILM:10.0K OHM,1%,0.125W,TC=T0	19701	5033ED10K0F
A1R5143	321-0289-00			RES,FXD,FILM:10.0K OHM,1%,0.125W,TC=T0	19701	5033ED10K0F
A1R5144	315-0102-00			RES,FXD,FILM:1K OHM,5%,0.25W	57668	NTR25JE01K0
A1R5146	315-0563-00			RES,FXD,FILM:56K OHM,5%,0.25W	19701	5043CX56K00J
A1R5148	315-0103-00			RES,FXD,FILM:10K OHM,5%,0.25W	19701	5043CX10K00J
A1R5149	315-0103-00			RES,FXD,FILM:10K OHM,5%,0.25W	19701	5043CX10K00J
A1R5150	315-0302-00			RES,FXD,FILM:3K OHM,5%,0.25W	57668	NTR25J-E03K0
A1R5152	315-0202-00			RES,FXD,FILM:2K OHM,5%,0.25W	57668	NTR25J-E 2K
A1R5153	315-0302-00			RES,FXD,FILM:3K OHM,5%,0.25W	57668	NTR25J-E03K0
A1R5154	321-0200-00			RES,FXD,FILM:1.18K OHM,1%,0.125W,TC=T0	19701	5033ED11K80F
A1R5155	315-0912-00			RES,FXD,FILM:9.1K OHM,5%,0.25W	57668	NTR25J-E09K1
A1R5156	321-0220-00			RES,FXD,FILM:1.91K OHM,1%,0.125W,TC=T0	19701	5033ED1K91F
A1R5157	321-0289-00			RES,FXD,FILM:10.0K OHM,1%,0.125W,TC=T0	19701	5033ED10K0F
A1R5159	321-0289-00			RES,FXD,FILM:10.0K OHM,1%,0.125W,TC=T0	19701	5033ED10K0F
A1R5160	315-0102-00			RES,FXD,FILM:1K OHM,5%,0.25W	57668	NTR25JE01K0

Component No.	Tektronix Part No.	Serial Assembly No. Effective	Dscont	Name & Description	Mfr. Code	Mfr. Part No.
A1R5162	315-0563-00			RES,FXD,FILM:56K OHM,5%,0.25W	19701	5043CX56K00J
A1R5164	315-0103-00			RES,FXD,FILM:10K OHM,5%,0.25W	19701	5043CX10K00J
A1R5165	315-0103-00			RES,FXD,FILM:10K OHM,5%,0.25W	19701	5043CX10K00J
A1R5166	315-0302-00			RES,FXD,FILM:3K OHM,5%,0.25W	57668	NTR25J-E03K0
A1R5168	315-0202-00			RES,FXD,FILM:2K OHM,5%,0.25W	57668	NTR25J-E 2K
A1R5169	315-0302-00			RES,FXD,FILM:3K OHM,5%,0.25W	57668	NTR25J-E03K0
A1R5170	321-0200-00			RES,FXD,FILM:1.18K OHM,1%,0.125W,TC=T0	19701	5033ED11K80F
A1R5171	315-0912-00			RES,FXD,FILM:9.1K OHM,5%,0.25W	57668	NTR25J-E09K1
A1R5172	321-0220-00			RES,FXD,FILM:1.91K OHM,1%,0.125W,TC=T0	19701	5033ED1K91F
A1R5173	321-0289-00			RES,FXD,FILM:10.0K OHM,1%,0.125W,TC=T0	19701	5033ED10K0F
A1R5175	321-0289-00			RES,FXD,FILM:10.0K OHM,1%,0.125W,TC=T0	19701	5033ED10K0F
A1R5176	315-0102-00			RES,FXD,FILM:1K OHM,5%,0.25W	57668	NTR25JE01K0
A1R5178	315-0563-00			RES,FXD,FILM:56K OHM,5%,0.25W	19701	5043CX56K00J
A1R5180	315-0103-00			RES,FXD,FILM:10K OHM,5%,0.25W	19701	5043CX10K00J
A1R5181	315-0103-00			RES,FXD,FILM:10K OHM,5%,0.25W	19701	5043CX10K00J
A1R5182	315-0302-00			RES,FXD,FILM:3K OHM,5%,0.25W	57668	NTR25J-E03K0
A1R5184	315-0202-00			RES,FXD,FILM:2K OHM,5%,0.25W	57668	NTR25J-E 2K
A1R5185	315-0302-00			RES,FXD,FILM:3K OHM,5%,0.25W	57668	NTR25J-E03K0
A1R5186	321-0200-00			RES,FXD,FILM:1.18K OHM,1%,0.125W,TC=T0	19701	5033ED11K80F
A1R5187	315-0912-00			RES,FXD,FILM:9.1K OHM,5%,0.25W	57668	NTR25J-E09K1
A1R5188	321-0220-00			RES,FXD,FILM:1.91K OHM,1%,0.125W,TC=T0	19701	5033ED1K91F
A1R5189	321-0289-00			RES,FXD,FILM:10.0K OHM,1%,0.125W,TC=T0	19701	5033ED10K0F
A1R5191	321-0289-00			RES,FXD,FILM:10.0K OHM,1%,0.125W,TC=T0	19701	5033ED10K0F
A1R5192	315-0102-00			RES,FXD,FILM:1K OHM,5%,0.25W	57668	NTR25JE01K0
A1R5194	315-0563-00			RES,FXD,FILM:56K OHM,5%,0.25W	19701	5043CX56K00J
A2	670-6417-00			CIRCUIT BD ASSY:CABLE	80009	670-6417-00
A2DS1	150-1001-02			LT EMITTING DIO:RED,660NM,50MA MAX	50434	HLMP3000
A2DS2	150-1001-02			LT EMITTING DIO:RED,660NM,50MA MAX	50434	HLMP3000
A2Q1	151-0190-00			TRANSISTOR:NPN,SI,TO-92	80009	151-0190-00
A2Q2	151-0190-00			TRANSISTOR:NPN,SI,TO-92	80009	151-0190-00
A2R1	315-0103-00			RES,FXD,FILM:10K OHM,5%,0.25W	19701	5043CX10K00J
A2R3	315-0301-00			RES,FXD,FILM:300 OHM,5%,0.25W	57668	NTR25J-E300E
A2R4	315-0301-00			RES,FXD,FILM:300 OHM,5%,0.25W	57668	NTR25J-E300E
A2R6	315-0103-00			RES,FXD,FILM:10K OHM,5%,0.25W	19701	5043CX10K00J
A2S1	260-0247-00			SWITCH,PUSH:SPST,1A,115VAC	81073	30YY1009

DIAGRAMS AND CIRCUIT BOARD ILLUSTRATIONS

Symbols

Graphic symbols and class designation letters are based on ANSI Standard Y32.2-1975.

Logic symbology is based on ANSI Y32.14-1973 in terms of positive logic. Logic symbols depict the logic function performed and may differ from the manufacturer's data.

The overline on a signal name indicates that the signal performs its intended function when it is in the low state.

Abbreviations are based on ANSI Y1.1-1972.

Other ANSI standards that are used in the preparation of diagrams by Tektronix, Inc. are:

Y14.15, 1966	Drafting Practices.
Y14.2, 1973	Line Conventions and Lettering.
Y10.5, 1968	Letter Symbols for Quantities Used in Electrical Science and Electrical Engineering.

American National Standard Institute
1430 Broadway
New York, New York 10018

Component Values

Electrical components shown on the diagrams are in the following units unless noted otherwise:

Capacitors = Values one or greater are in picofarads (pF). Values less than one are in microfarads (μF).

Resistors = Ohms (Ω).

The information and special symbols below may appear in this manual.

Assembly Numbers and Grid Coordinates

Each assembly in the instrument is assigned an assembly number (e.g., A20). The assembly number appears on the circuit board outline on the diagram, in the title for the circuit board component location illustration, and in the lookup table for the schematic diagram and corresponding component locator illustration. The Replaceable Electrical Parts list is arranged by assemblies in numerical sequence; the components are listed by component number *(see following illustration for constructing a component number).

The schematic diagram and circuit board component location illustration have grids. A lookup table with the grid coordinates is provided for ease of locating the component. Only the components illustrated on the facing diagram are listed in the lookup table. When more than one schematic diagram is used to illustrate the circuitry on a circuit board, the circuit board illustration may only appear opposite the first diagram on which it was illustrated; the lookup table will list the diagram number of other diagrams that the circuitry of the circuit board appears on.

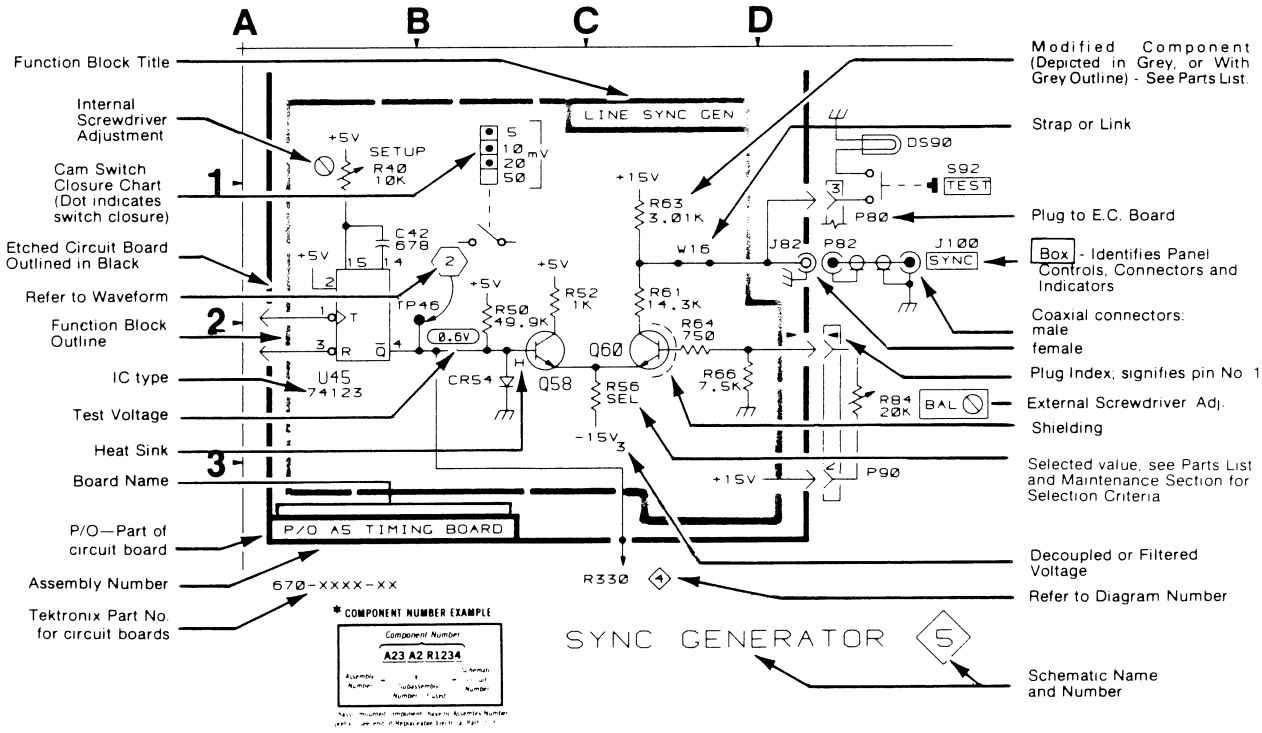

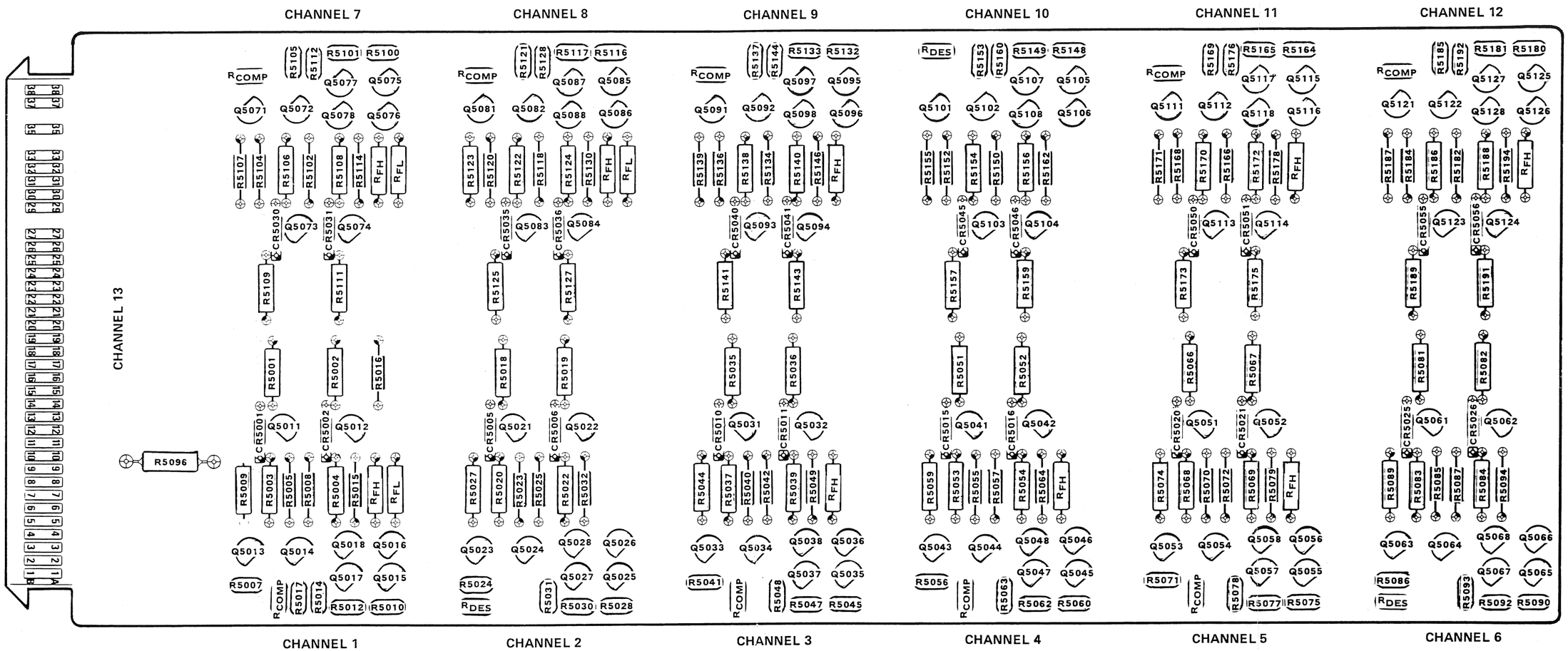

Fig. 5-1. A1—Program circuit board assembly.

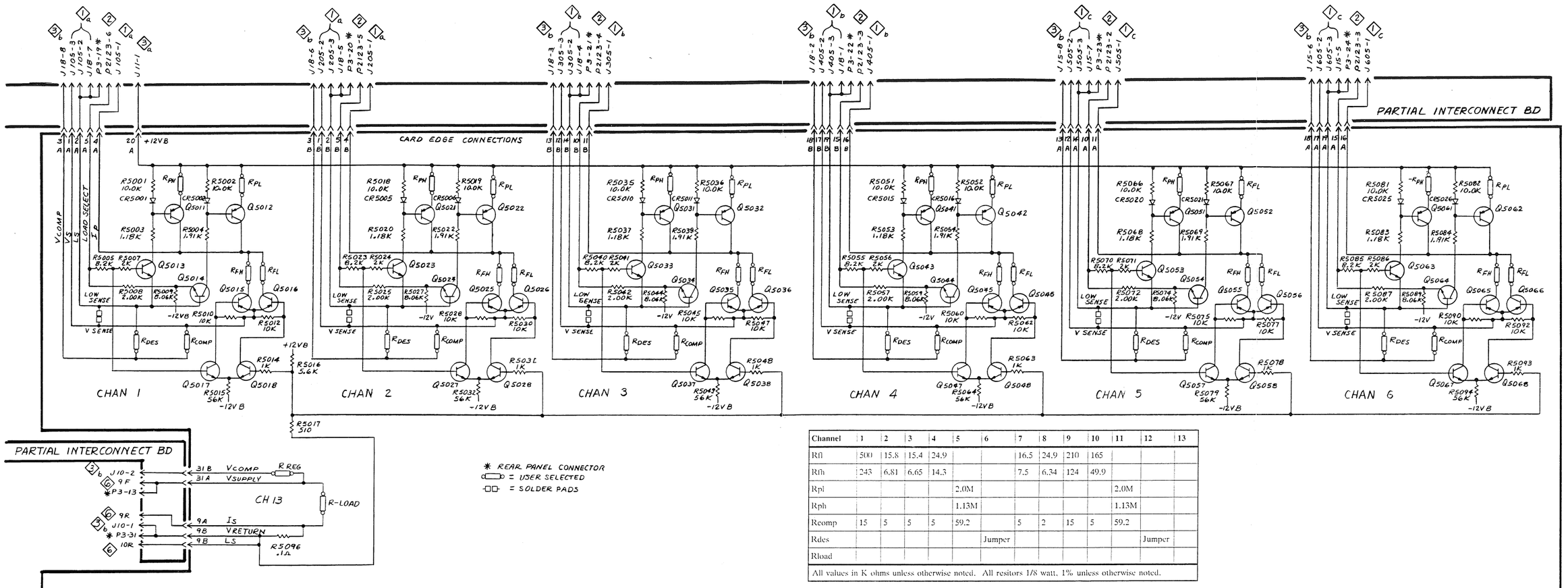

Channel	1	2	3	4	5	6	7	8	9	10	11	12	13
Rfl	500	15.8	15.4	24.9			16.5	24.9	210	165			
Rfh	243	6.81	6.65	14.3			7.5	6.34	124	49.9			
Rpl					2.0M						2.0M		
Rph					1.13M						1.13M		
Rcomp	15	5	5	5	59.2		5	2	15	5	59.2		
Rdes						Jumper						Jumper	
Rload													

All values in K ohms unless otherwise noted. All resitors 1/8 watt, 1% unless otherwise noted.

* REAR PANEL CONNECTOR
= USER SELECTED
= SOLDER PADS

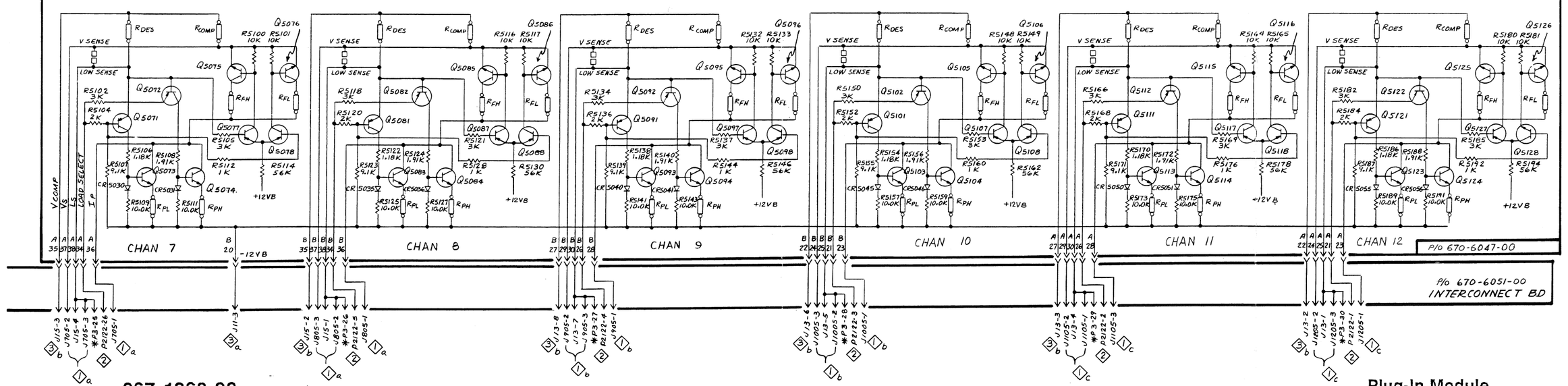

067-1363-99

Plug-In Module
PROGRAM BOARD

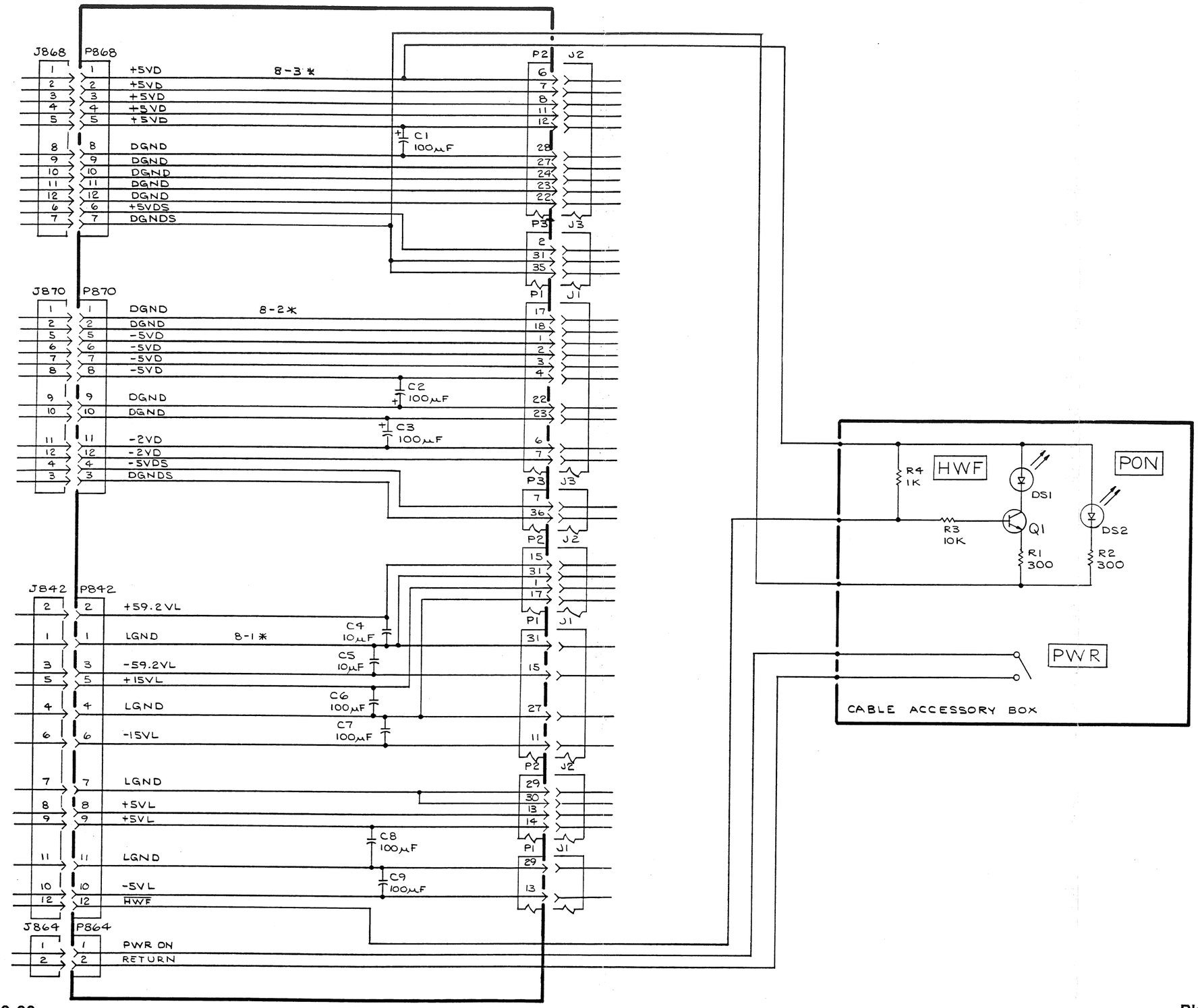

067-1363-99

Plug-In Module
CABLE ASSEMBLY

REPLACEABLE MECHANICAL PARTS

PARTS ORDERING INFORMATION

Replacement parts are available from or through your local Tektronix, Inc. Field Office or representative.

Changes to Tektronix instruments are sometimes made to accommodate improved components as they become available, and to give you the benefit of the latest circuit improvements developed in our engineering department. It is therefore important, when ordering parts, to include the following information in your order: Part number, instrument type or number, serial number, and modification number if applicable.

If a part you have ordered has been replaced with a new or improved part, your local Tektronix, Inc. Field Office or representative will contact you concerning any change in part number.

Change information, if any, is located at the rear of this manual.

ITEM NAME

In the Parts List, an Item Name is separated from the description by a colon (:). Because of space limitations, an Item Name may sometimes appear as incomplete. For further Item Name identification, the U.S. Federal Cataloging Handbook H6-1 can be utilized where possible.

FIGURE AND INDEX NUMBERS

Items in this section are referenced by figure and index numbers to the illustrations.

INDENTATION SYSTEM

This mechanical parts list is indented to indicate item relationships. Following is an example of the indentation system used in the description column.

1 2 3 4 5 Name & Description

Assembly and/or Component
Attaching parts for Assembly and/or Component
**** END ATTACHING PARTS ****
Detail Part of Assembly and/or Component
Attaching parts for Detail Part
**** END ATTACHING PARTS ****
Parts of Detail Part
Attaching parts for Parts of Detail Part
**** END ATTACHING PARTS ****

Attaching Parts always appear in the same indentation as the item it mounts, while the detail parts are indented to the right. Indented items are part of, and included with, the next higher indentation.

Attaching parts must be purchased separately, unless otherwise specified.

ABBREVIATIONS

"	INCH
#	NUMBER SIZE
ACTR	ACTUATOR
ADPTR	ADAPTER
ALIGN	ALIGNMENT
AL	ALUMINUM
ASSEM	ASSEMBLED
ASSY	ASSEMBLY
ATTEN	ATTENUATOR
AWG	AMERICAN WIRE GAGE
BD	BOARD
BRKT	BRACKET
BRS	BRASS
BRZ	BRONZE
BSHG	BUSHING
CAB	CABINET
CAP	CAPACITOR
CER	CERAMIC
CHAS	CHASSIS
CKT	CIRCUIT
COMP	COMPOSITION
CONN	CONNECTOR
COV	COVER
CPLG	COUPLING
CRT	CATHODE RAY TUBE
DEG	DEGREE
DWR	DRAWER
ELCTRN	ELECTRON
ELEC	ELECTRICAL
ELCTLT	ELECTROLYTIC
ELEM	ELEMENT
EPL	ELECTRICAL PARTS LIST
EQPT	EQUIPMENT
EXT	EXTERNAL
FIL	FILLISTER HEAD
FLEX	FLEXIBLE
FLH	FLAT HEAD
FLTR	FILTER
FR	FRAME or FRONT
FSTNR	FASTENER
FT	FOOT
FXD	FIXED
GSKT	GASKET
HDL	HANDLE
HEX	HEXAGON
HEX HD	HEXAGONAL HEAD
HEX SOC	HEXAGONAL SOCKET
HLCPS	HELICAL COMPRESSION
HLEXT	HELICAL EXTENSION
HV	HIGH VOLTAGE
IC	INTEGRATED CIRCUIT
ID	INSIDE DIAMETER
IDENT	IDENTIFICATION
IMPLR	IMPELLER
IN	INCH
INCAND	INCANDESCENT
INSUL	INSULATOR
INTL	INTERNAL
LPHLDR	LAMPHOLDER
MACH	MACHINE
MECH	MECHANICAL
MTG	MOUNTING
NIP	NIPPLE
NON WIRE	NOT WIRE WOUND
OBD	ORDER BY DESCRIPTION
OD	OUTSIDE DIAMETER
OVH	OVAL HEAD
PH BRZ	PHOSPHOR BRONZE
PL	PLAIN or PLATE
PLSTC	PLASTIC
PN	PART NUMBER
PNH	PAN HEAD
PWR	POWER
RCPT	RECEPTACLE
RES	RESISTOR
RGD	RIGID
RLF	RELIEF
RTNR	RETAINER
SCH	SOCKET HEAD
SCOPE	OSCILLOSCOPE
SCR	SCREW
SE	SINGLE END
SECT	SECTION
SEMICOND	SEMICONDUCTOR
SHLD	SHIELD
SHLDR	SHOULDERED
SKT	SOCKET
SL	SLIDE
SLFLKG	SELF-LOCKING
SLVG	SLEEVING
SPR	SPRING
SQ	SQUARE
SST	STAINLESS STEEL
STL	STEEL
SW	SWITCH
T	TUBE
TERM	TERMINAL
THD	THREAD
THK	THICK
TNSN	TENSION
TPG	TAPPING
TRH	TRUSS HEAD
V	VOLTAGE
VAR	VARIABLE
W/	WITH
WSHR	WASHER
XFMR	TRANSFORMER
XSTR	TRANSISTOR

Replaceable Mechanical Parts
067-1363-99 ULU Programmable Plug-in

Fig. & Index No.	Tektronix Part No.	Serial/Assembly No. Effective	Dscont	Qty	12345 Name & Description	Mfr. Code	Mfr. Part No.
1-1	333-1367-00			1	PANEL,FRONT:	80009	333-1367-00
-2	334-3663-01			1	MARKER,IDENT:MARKED CHANNEL VOLTAGE	80009	334-3663-01
-3	214-1095-00			1	PIN,SPRING:0.187 L X 0.094 OD,STL,CD PL	22599	52-022-094-0187
-4	366-1058-00			1	KNOB:GRAY,0.625 X 0.255 X 0.485	80009	366-1058-00
-5	105-0076-02			1	RELEASE BAR,LCH:PLUG-IN UNIT	80009	105-0076-02
-6	214-1280-00			1	SPRING,HLCPS:0.14 OD X 1.126 L,TWIST LOOP	91260	ORDER BY DESCR
-7	348-0235-00			2	SHLD GSKT,ELEK:FINGER TYPE,4.734 L	80009	348-0235-00
-8	386-1447-47			1	SUBPANEL,FRONT:	80009	386-1447-47
					(ATTACHING PARTS)		
-9	213-0192-00			4	SCREW,TPG,TF:6-32 X 0.5,SPCL TYPE,FILH,STL	87308	ORDER BY DESCR
					(END ATTACHING PARTS)		
-10	386-1402-04			1	PANEL,REAR:	80009	386-1402-04
					(ATTACHING PARTS)		
-11	213-0192-00			3	SCREW,TPG,TF:6-32 X 0.5,SPCL TYPE,FILH,STL	87308	ORDER BY DESCR
-12	386-3657-01			1	SUPPORT,PLUG-IN:	93907	ORDER BY DESCR
					(END OF ATTACHING PARTS)		
-13	426-0505-07			1	FR SECT,PLUG-IN:TOP	80009	426-0505-07
					(ATTACHING PARTS)		
-14	220-0547-01			3	NUT BLOCK:4-40 X 0.282,NI SIL NP	80009	220-0547-01
-15	211-0105-00			3	SCREW,MACHINE:4-40 X 0.188,FLH,100 DEG	TK0435	ORDER BY DESCR
					(END ATTACHING PARTS)		
-16	214-1061-00			1	CONTACT,ELEC:GROUNDING,CU BE	80009	214-1061-00
-17	426-0499-07			1	FR SECT,PLUG-IN:BOTTOM	80009	426-0499-07
					(ATTACHING PARTS)		
-18	220-0547-01			3	NUT BLOCK:4-40 X 0.282,NI SIL NP	80009	220-0547-01
-19	211-0105-00			3	SCREW,MACHINE:4-40 X 0.188,FLH,100 DEG	TK0435	ORDER BY DESCR
					(END ATTACHING PARTS)		
-20	214-1054-00			1	SPRING,FLAT:0.825 X 0.322,SST	TK1326	ORDER BY DESCR
-21	105-0075-00			1	BOLT,LATCH:	80009	105-0075-00
-22	337-1064-12			2	SHIELD,ELEC:SIDE FOR PLUG-IN UNIT	80009	337-1064-12
-23	----- -----			1	CIRCUIT BD ASSY:PROGRAM		
					(ATTACHING PARTS)		
-24	211-0116-00			6	SCR,ASSEM WSHR:4-40 X 0.312,PNH,BRS,NP,POZ	77900	ORDER BY DESCR
					(END ATTACHING PARTS)		

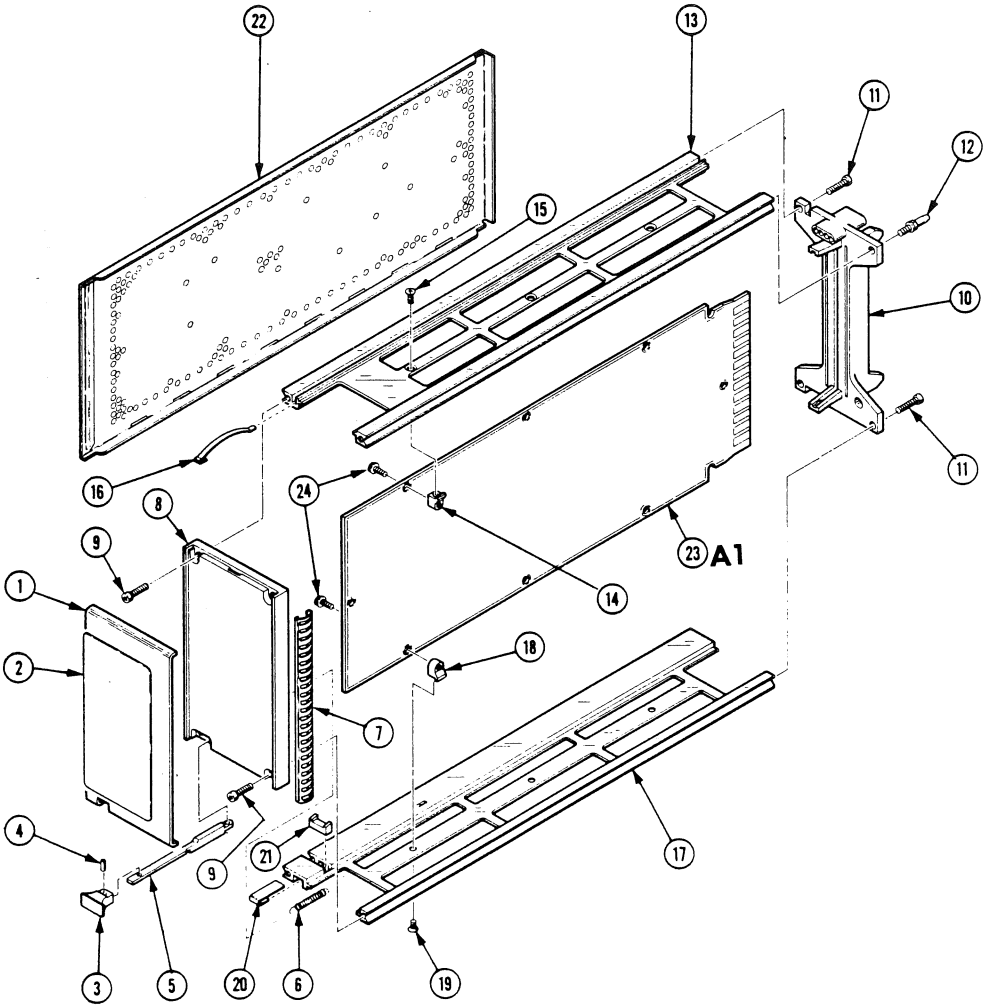

FIG. 1 PLUG-IN

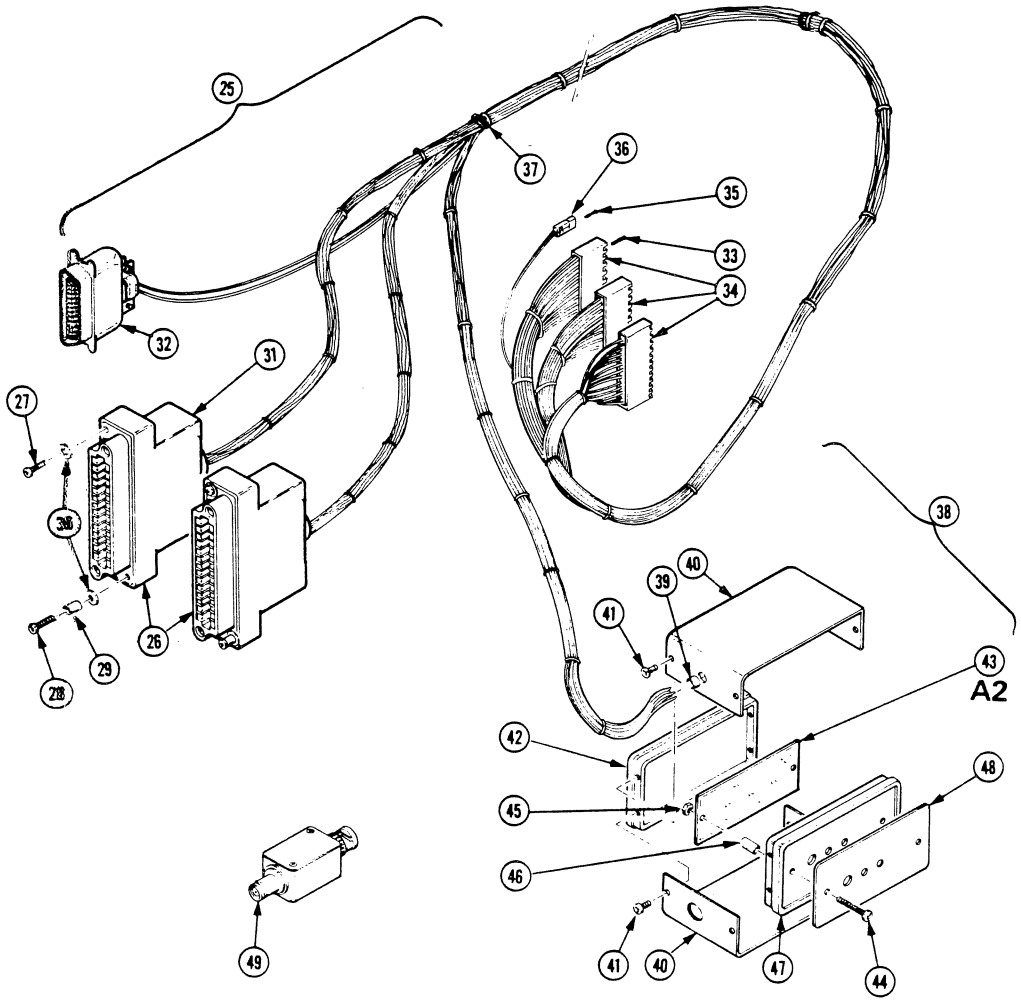

FIG. 2 INTERCONNECT CABLE

Fig. & Index No.	Tektronix Part No.	Serial/Assembly No. Effective	Dscont	Qty	12345 Name & Description	Mfr. Code	Mfr. Part No.
2-25	198-5645-00			1	WIRE SET,ELEC:INTERCONNECT	80009	198-5645-00
-26	131-0097-00			2	.CONN,RCPT,ELEC:32 CONTACT,FEMALE	02660	26-190-32
					.(P1,P2 CONNECT TO J1,J2 ON REAR OF ULU)		
					(ATTACHING PARTS)		
-27	211-0012-00			2	.SCREW,MACHINE:4-40 X 0.375,PNH,STL	TK0435	ORDER BY DESCR
-28	211-0017-00			2	.SCREW,MACHINE:4-40 X 0.75,PNH,STL	93907	ORDER BY DESCR
-29	129-0222-00			2	.SPACER,POST:0.27 L,4-40 THRU,PLSTC,0.25 OD	80009	129-0222-00
-30	210-0851-00			4	.WASHER,FLAT:0.119 ID X 0.375 OD X 0.025,STL	12327	ORDER BY DESCR
					(END ATTACHING PARTS)		
-31	200-0551-00			2	.COVER,PL-IN EXT:3.895 X 2.125 X 0.987,GRAY	80009	200-0551-00
					.PLASTIC,012-0080-00		
-32	131-0293-00			1	.CONN,PLUG,ELEC:CABLE,36 CONT,MALE	02660	57-30360
					.(P3 CONNECTS TO J3 ON REAR OF ULU)		
-33	131-3850-00			36	.CONTACT,ELEC:BRASS,GOLD PL	80009	131-3850-00
-34	352-0844-00			3	.HLDR,TERM CONN:1 X 12,0.156 CTR,NYLON	TK0AT	1-640251-2
					.(P842 CONNECTS TO A80A84J842, P868 AND P870		
					. CONNECT TO A80A86J868,J870)		
-35	131-0708-00			2	.CONTACT,ELEC:28-32 AWG,BRS,CU BE GLD PL	22526	47437-000
-36	352-0169-00			1	.HLDR,TERM CONN:2 WIRE,BLACK	80009	352-0169-00
-37	343-0549-00			6	.STRAP,TIEDOWN,E:0.091 W X 4.0 L,ZYTEL	06383	PLT1M
-38	012-1262-00			1	CABLE ASSEMBLY:ULU/POWER SUP INTERCONNECT	80009	012-1262-00
-39	358-0091-00			1	.BSHG,STRAIN RLF:U/W 0.19 OD CABLE,STRAIGHT	28520	1060 (SR 2M-4)BL
-40	380-0358-02			2	.HSG HALF,WRAPAR:ALUMINUM	80009	380-0358-02
					(ATTACHING PARTS)		
-41	211-0005-00			8	.SCREW,MACHINE:4-40 X 0.125,PNH,STL	86060	ORDER BY DESCR
					(END ATTACHING PARTS)		
-42	200-0327-12			1	.SUBPANEL,REAR:	80009	200-0327-12
-43	----- -----			1	.CKT BOARD ASSY:CABLE (SEE A2 REPL)		
					(ATTACHING PARTS)		
-44	211-0514-00			2	.SCREW,MACHINE:6-32 X 0.750,PNH,STL	TK0435	1541-300
-45	210-0407-00			2	.NUT,PLAIN,HEX:6-32 X 0.25,BRS CD PL	73743	3038-402
					(END ATTACHING PARTS)		
-46	166-0034-00			2	.SPACER,SLEEVE:0.438 L X 0.18 ID,AL	80009	166-0034-00
-47	200-0327-13			1	.SUBPANEL,FRONT:	80009	200-0327-13
-48	333-2632-00			1	.PANEL,FRONT:	80009	333-2632-00
					STANDARD ACCESSORIES		
-49	011-0146-00			1	NORMALIZER:SPECIAL PROBE,RTD710	80009	011-0146-00
	061-3566-00			1	MANUAL,TECH:067-1363-99 ULU PROGRAMMABLE PL	80009	061-3566-00
					UG-IN FOR RTD710		

CROSS INDEX - MFR. CODE NUMBER TO MANUFACTURER

Mfr. Code	Manufacturer	Address	City, State, Zip Code
02660	AMPHENOL CORP SUB OF ALLIED CORP COMMERCIAL AND INDUSTRIAL OPNS	4300 COMMERCE CT	LISLE IL 60532
06383	PANDUIT CORP	17301 RIDGELAND	TINLEY PARK IL 07094-2917
12327	FREEWAY CORP	9301 ALLEN DR	CLEVELAND OH 44125-4632
22526	DU PONT E I DE NEMOURS AND CO INC DU PONT CONNECTOR SYSTEMS DIV MILITARY PRODUCTS GROUP	515 FISHING CREEK RD	NEW CUMBERLAND PA 17070-3007
22599	AMERACE CORP ESNA DIV	15201 BURBANK BLVD SUITE C	VAN NUYS CA 91411-3532
28520	HEYCO MOLDED PRODUCTS	750 BOULEVARD P O BOX 160	KENILWORTH NJ 07033-1721
73743	FISCHER SPECIAL MFG CO	111 INDUSTRIAL RD	COLD SPRING KY 41076-9749
77900	SHAKEPROOF DIV OF ILLINOIS TOOL WORKS	SAINT CHARLES RD	ELGIN IL 60120
80009	TEKTRONIX INC	14150 SW KARL BRAUM DR PO BOX 500 MS 53-111	BEAVERTON OR 97077
86060	CAMPBELL INDUSTRIAL SUPPLY CO	1705 4TH AVE S PO BOX C2480898124	SEATTLE WA 98134-1514
87308	FARLEY METALS INC SOUTHERN SCREW DIV	BARKLEY RD P O BOX 1360	STATESVILLE NC 28677-9774
91260	CONNOR SPRING AND MFG CO	1729 JUNCTION AVE	SAN JOSE CA 95112
93907	TEXTRON INC CAMCAR DIV	600 18TH AVE	ROCKFORD IL 61101
TK0435	LEWIS SCREW CO	4300 S RACINE AVE	CHICAGO IL 60609-3320
TK0AT	AMP INC	7-15-14 ROPPONGI MINATO-KU	TOKYO JAPAN
TK1326	NORTHWEST FOURSLIDE INC	18224 SW 100TH CT	TUALATIN OR 97062

Appendix A

Miscellaneous Data

This appendix contains pin assignment information for the ULU cable harness connectors and for the RTD-710 Power Supply connectors.

Table A-1. ULU Cable Assembly Connections.

Channel Number	Voltage	Connector Pin Assignment Input	Return	Sense
1	+15 V	P2-1	P2-17	NOT USED
2	+5Vd	P2-6,7,8	P2-22,23,24	P3-2
3	+5Vd	P2-11,12	P2-27,28	NOT USED
4	+5Vl	P2-13,14	P2-29,30	NOT USED
5	+59.2 V	P2-15	P2-31	NOT USED
6			N O T U S E D	
7	-5Vd	P1-1,2,3,4	P1-17,18	P3-7
8	-2 V	P1-6,7	P1-22,23	NOT USED
9	-15 V	P1-11	P1-27	NOT USED
10	-5Vl	P1-13	P1-29	NOT USED
11	-59.2 V	P1-15	P1-31	NOT USED
12			N O T U S E D	
13			N O T U S E D	

Table A-2. RTD-710 Power Supply Connectors Pin Assignment

Pin Number	Name of Connector/Signal J 842	J 868	J 870	J 864
1	LGND *	+5Vd	DGND *	PS *
2	+59.2Vl	+5Vd	DGND	PRSET *
3	-59.2Vl	+5Vd	DGNDS *	
4	LGND	+5Vd	-5VdS *	
5	+15Vl	+5Vd	-5Vd	
6	-15Vl	+5VdS	-5Vd	
7	LGND	DGNDS	-5Vd	
8	+5Vl	DGND	-5Vd	
9	+5Vl	DGND	DGND	
10	-5Vl	DGND	DGND	
11	LGND	DGND	-2Vd	
12	/HWF *	DGND	-2Vd	

* LGND = ground for analog voltages
DGND = ground for digital voltages
PS = power on for power switch
PRSET = return for power switch
+5VdS = voltage remote sensing line for +5Vd
-5VdS = voltage remote sensing line for -5Vd
DGNDS = voltage remote sensing line for +5Vd and -5Vd
/HWF = hardware fail signal