product modification

050-1467-01

M40229, M43414

VARIABLE RESOLUTION MODULE REPLACEMENT

For TEKTRONIX® 492/492P Spectrum Analyzers

Serial Numbers B010100 - B019999

Variable Resolution Module, pn 644-0163-06, replaces Variable Resolution Module, pn 644-0163-00, which is no longer available.

The Volume 1 Service Manual, included in the kit, contains the calibration procedure required to calibrate the new redesigned Variable Resolution Module.

NOTE

If the serial number of your Spectrum Analyzer is above those listed, or if this kit has been installed, disregard the instructions and use Variable Resolution Module, pn 644-0163-06 as a direct replacement.

Copyright ©1981, 1982
Tektronix, Inc.
All Rights Reserved

5-4-82
Supersedes:050-1467-00

TEKTRONIX, SCOPE-MOBILE and are registered trademarks of Tektronix, Inc. SONY / TEKTRONIX is a registered trademark of Sony / Tektronix, Inc.

PARTS INCLUDED IN PARTS REPLACEMENT KIT:

Ckt. No.	Quantity	Part Number	Description
	1 ea	070-3783-01	Manual, 492/492P Service Volume 1
A68/A69	1 ea	644-0163-06	Variable Resolution Module
	1 ea		Marker, identification

INSTRUCTIONS:

NOTE

The new V.R. Assembly, contained in this Parts Replacement Kit, contains a new type variable capacitor that requires a special tuning tool. The new tool is a Johanson #8758, which can be ordered from Tektronix, Inc. Order part number 003-0968-00.

( ) 1. Remove the instrument from the cabinet.

( ) 2. Disconnect coax cables from J693 & J682 from the Variable Resolution Module.

( ) 3. Disconnect coax cables from A62 Log & Video Amplifier circuit board connectors, J620 & J621, to gain access to Variable Resolution Module mounting screw.

( ) 4. Remove the 6-32 x .25 inch screw that fastens the right end of the Variable Resolution Module to the bracket on the inner chassis.

( ) 5. Remove the 6-32 x .375 inch screw that fastens the left end of the Variable Resolution Module to the left frame section and remove the Variable Resolution Module.

( ) 6. Install the new Variable Resolution Module by performing steps 2 through 5 in reverse order.

Refer to the Calibration procedure in the Instruction Manual included in the kit and the Modification Insert and recalibrate as necessary.

For future reference, fasten the Instruction Manual Modification Insert in your Volume 2 Service Manual.

Remove the protective backing from the identification marker and place the marker on a clean area of the frame rail near the serial number tag and reinstall electrical shields.

JT:cp

Product Modification Kit
SUGGESTION/CORRECTION FORM

DATE _____

KIT NUMBER _____ STEP/PAGE _____

FIGURE NUMBER _____ PUBLICATION DATE _____

DISCREPANCY _____

_____

_____

_____

SUGGESTED CORRECTION / COMMENTS _____

_____

_____

SUGGESTED BY: NAME / ORGANIZATION _____

☐ REPLY REQUESTED

RETURN TO LOCAL FIELD OFFICE / SERVICE CENTER

FIELD OFFICE / SERVICE CENTER / DEL. STA. _____

SERVICE CENTER: RETURN TO PARTS RESEARCH 73-848

REPLY

☐ WILL MAKE CHANGE IMMEDIATELY

☐ WILL MAKE CHANGE AT NEXT PRINTING

☐ OTHER _____

_____

_____

_____ DATE _____

MANUAL

INSERT 492/492P VOLUME 2 SERVICE

VARIABLE RESOLUTION MODULE REPLACEMENT

492/492P Serial Numbers B010100 - B019999

Installed in Type_____SN_____Date_____

This modification insert is provided to supplement the Instruction Manual for the above listed products. The information given in this insert supersedes that given in the Manual.

Copyright ©1981 by Tektronix, Inc., Beaverton, Oregon. Printed in the United States of America. All rights reserved. Contents of this insert may not be reproduced in any form without the permission of the copyright owner.

GENERAL INFORMATION

Variable Resolution Module, pn 644-0163-06, replaces Variable Resolution Module, pn 644-0163-01, which is no longer available.

The new redesigned Variable Resolution Module requires a new calibration procedure which is included in the kit.

050-1467-01

REPLACEABLE ELECTRICAL PARTS AND SCHEMATIC CHANGES

CHANGE TO:

A68	644-0141-02	VAR RESOLN MDLE:#2
A68A1	670-5536-02	CKT BOARD ASSY:#2 V.R. MOTHER
A68A2	670-5534-04	CKT BOARD ASSY:2ND FILTER SELECT (XTALS NOT INCLUDED WITH THIS CKT BD)
A68A3	670-5533-02	CKT BOARD ASSY:BAND LEVELING
A68A4	670-5535-01	CKT BOARD ASSY:POST V.R. AMPLIFIER
A69	644-0140-02	VAR RESOLN MDLE:#1
A69A1	670-5528-02	CKT BOARD ASSY:#1 V.R. MOTHER
A69A2	670-5529-01	CKT BOARD ASSY:V.R. INPUT
A69A3	670-5530-03	CKT BOARD ASSY:1ST FILTER SELECT (XTALS NOT INCLUDED WITH THIS CKT BD)
A69A4	670-5531-03	CKT BOARD ASSY:10DB GAIN STEPS
A69A5	670-5532-03	CKT BOARD ASSY:20 DB GAIN STEPS

ADD:

A68/A69	644-0163-06	VAR MDLE:#1 (644-0140-01) plus VR MDLE:#2 (644-0141-01)WITH MATCHED SET OF 10 kHz XTALS AND MATCHED SET OF 1 kHz XTALS(650-0144-02)
	644-0163-07	OPTION 3 VR ASSEMBLY CONSISTING OF;(644-0163-04) plus matched set of 100 kHz XTALS (650-0144-01)
	650-0144-01	MATCHED SET OF 100 kHz XTALS IN THEIR HOLDER
	650-0144-02	MATCHED SET OF 10 kHz XTALS IN THEIR HOLDER (119-0968-00) AND MATCHED SET OF 1 kHz XTALS IN THEIR HOLDER (119-0969-00)

CHANGE TO:

A68A1	670-5536-01	CKT BOARD ASSY:#2 V. R. MOTHER
R2033	321-0756-00	RES.,FXD,FILM:50K OHM,1%,0.125W
R2031	311-0978-00	RES.,VAR,NONWIR:TRMR,250 OHM,0.5W
R3019	311-0978-00	RES.,VAR,NONWIR:TRMR,250 OHM,0.5W
R3022	311-0978-00	RES.,VAR,NONWIR:TRMR,250 OHM,0.5W
R3024	311-0978-00	RES.,VAR,NONWIR:TRMR,250 OHM,0.5W
R3026	311-0978-00	RES.,VAR,NONWIR:TRMR,250 OHM,0.5W
R3028	311-0978-00	RES.,VAR,NONWIR:TRMR,250 OHM,0.5W
R3029	311-0978-00	RES.,VAR,NONWIR:TRMR,250 OHM,0.5W
R3030	311-0978-00	RES.,VAR,NONWIR:TRMR,250 OHM,0.5W
R3032	311-0978-00	RES.,VAR,NONWIR:TRMR,250 OHM,0.5W
R3034	311-0978-00	RES.,VAR,NONWIR:TRMR,250 OHM,0.5W
R4039	315-0100-00	RES.,FXD,CMPSN:10 OHM,5%,0.25W

DESCRIPTION

REMOVE:

C1023	283-0204-00	CAP.,FXD,CER DI:0.01UF,20%,50V
C1075	283-0204-00	CAP.,FXD,CER DI:0.01UF,20%,50V
C1077	283-0204-00	CAP.,FXD,CER DI:0.01UF,20%,50V
C1078	283-0204-00	CAP.,FXD,CER DI:0.01UF,20%,50V
C2022	283-0204-00	CAP.,FXD,CER DI:0.01UF,20%,50V
C2026	283-0204-00	CAP.,FXD,CER DI:0.01UF,20%,50V
C2036	283-0204-00	CAP.,FXD,CER DI:0.01UF,20%,50V
C2073	283-0204-00	CAP.,FXD,CER DI:0.01UF,20%,50V
C2076	283-0204-00	CAP.,FXD,CER DI:0.01UF,20%,50V
C2077	283-0204-00	CAP.,FXD,CER DI:0.01UF,20%,50V
C2078	283-0204-00	CAP.,FXD,CER DI:0.01UF,20%,50V
C2079	283-0204-00	CAP.,FXD,CER DI:0.01UF,20%,50V
C2092	283-0204-00	CAP.,FXD,CER DI:0.01UF,20%,50V
C3074	283-0204-00	CAP.,FXD,CER DI:0.01UF,20%,50V
C4028	283-0111-00	CAP.,FXD,CER DI:0.1UF,20%,50V
C4036	283-0111-00	CAP.,FXD,CER DI:0.1UF,20%,50V
C4081	283-0204-00	CAP.,FXD,CER DI:0.01UF,20%,50V
E4039	276-0576 00	COR,EM:TOROID,FERRITE
R2047	321-0054-00	RES.,FXD,FILM:35.7 OHM,1,0.125W
R2048	321-0114-00	RES.,FXD,FILM:150 OHM,1%,0.125W
R2049	321-0114-00	RES.,FXD,FILM:150 OHM 1%,0.125W

CHANGE TO:

A68A2	670-5534-01	CKT BOARD ASSY:2ND FILTER SELECT
C2050	281-0245-00	CAP.,VAR,CER DI:7.5-50PF
C5055	281-0245-00	CAP.,VAR,CER DI:7.5-50PF
C8040	283-0204-00	CAP.,FXD,CER DI:0.01UF,20%,50V
C8057	283-0204-00	CAP.,FXD,CER DI:0.01UF,20%,50V
R1065	311-0622-00	RES.,VAR,NONWW:TRMR,100 OHM,0.5W

REMOVE:

C1075	283-0204-00	CAP.,FXD,CER DI:0.01UF,20%,50V
C2079	283-0204-00	CAP.,FXD,CER DI:0.01UF,20%,50V
C3079	283-0204-00	CAP.,FXD,CER DI:0.01UF,20%,50V
C4031	283-0618-00	CAP.,FXD,MICA D:130PF,2%,400V
C4034	283-0647-00	CAP.,FXD,MICA D:70PF,1%,100V
C4040	281-0167-00	CAP.,VAR,CER DI:9-45PF,200V
C4041	283-0602-00	CAP.,FXD,MICA D:53PF,5%,300V
C5030	281-0167-00	CAP.,VAR,CER DI:9-45PF,200V
C5045	283-0644-00	CAP.,FXD,MICA D:150PF,1%,500V
C5070	283-0204-00	CAP.,FXD,CER DI:0.01UF,20%,50V
C5075	283-0204-00	CAP.,FXD,CER DI:0.01UF,20%,50V
C5079	283-0204-00	CAP.,FXD,CER DI:0.01UF,20%,50V
C6040	281-0167-00	CAP.,VAR,CER DI:9-45PF,200V
C6043	283-0647-00	CAP.,FXD,MICA D:70PF,1%,100V
C6044	283-0644-00	CAP.,FXD,MICA D:150PF,1%,500V
C6045	281-0167-00	CAP.,VAR,CER DI:9-45PF,200V
L4030	108-0964-00	COIL,RF:FIXED,115NH,TOROIDAL INDUCTOR
L4044	108-0964-00	COIL,RF:FIXED,115NH,TOROIDAL INDUCTOR
L7038	108-0964-00	COIL,RF:FIXED,115NH,TOROIDAL INDUCTOR
L7050	108-0964-00	COIL,RF:FIXED,115NH,TOROIDAL INDUCTOR

ADD:

R3015	311-0622-00	RES.,VAR,NONWW:TRMR,100 OHM,0.5W
R3025	311-0622-00	RES.,VAR,NONWW:TRMR,100 OHM,0.5W
R3035	311-0622-00	RES.,VAR,NONWW:TRMR,100 OHM,0.5W
T4040	120-1338-00	TRANSFORMER,RF:492 TOROID,2 WINDS
T5030	120-1237-00	TRANSFORMER,RF:TOROID,2 WINDS
T6040	120-1237-00	TRANSFORMER,RF:TOROID,2 WINDS
T6045	120-1338-00	TRANSFORMER,RF:492 TOROID,2 WINDS

CHANGE TO:

A68A3	670-5533-02	CKT BOARD ASSY:BAND LEVELING

The new 670-5533-02 consists of the following parts:

C1015	283-0111-00	CAP.,FXD,CER DI:0.1UF,20%,50V
C1017	283-0111-00	CAP.,FXD,CER DI:0.1UF,20%,50V
C1021	283-0107-00	CAP.,FXD,CER DI:51PF,5%,200V
C1025	283-0111-00	CAP.,FXD,CER DI:0.1UF,20%,50V
C1032	283-0111-00	CAP.,FXD,CER DI:0.1UF,20%,50V
C1035	283-0111-00	CAP.,FXD,CER DI:0.1UF,20%,50V
C1039	283-0107-00	CAP.,FXD,CER DI:51PF,5%,200V
C1044	283-0111-00	CAP.,FXD,CER DI:0.1UF,20%,50V
C2015	283-0111-00	CAP.,FXD,CER DI:0.1UF,20%,50V
C2018	283-0111-00	CAP.,FXD,CER DI:0.1UF,20%,50V
C2023	283-0111-00	CAP.,FXD,CER DI:0.1UF,20%,50V
C2028	283-0204-00	CAP.,FXD,CER DI:0.01UF,20%,50V
C2033	283-0111-00	CAP.,FXD,CER DI:0.1UF,20%,50V
C2034	283-0111-00	CAP.,FXD,CER DI:0.1UF,20%,50V
C2042	283-0111-00	CAP.,FXD,CER DI:0.1UF,20%,50V
C2043	283-0204-00	CAP.,FXD,CER DI:0.01UF,20%,50V
C2029	283-0111-00	CAP.,FXD,CER DI:0.1UF,20%,50V
C2046	283-0111-00	CAP.,FXD,CER DI:0.1UF,20%,50V
CR2021	152-0524-00	SEMICOND DEVICE:SILICON,100V,100MA
Q1025	151-0282-00	TRANSISTOR:SILICON,NPN
Q1031	151-0282-00	TRANSISTOR:SILICON,NPN
Q1033	151-0282-00	TRANSISTOR:SILICON,NPN
Q1041	151-0650-00	TRANSISTOR:SILICON,NPN
Q2015	151-0282-00	TRANSISTOR:SILICON,NPN
Q2019	151-0282-00	TRANSISTOR:SILICON,NPN
Q2046	151-0301-00	TRANSISTOR:SILICON,PNP
R1013	321-0130-00	RES.,FXD,FILM:221 OHM,1%,0.125W
R1014	317-0390-00	RES.,FXD,CMPSN:39 OHM,5%,0.125W
R1015	315-0681-00	RES.,FXD,CMPSN:680 OHM,5%,0.25W
R1016	317-0101-00	RES.,FXD,CMPSN:100 OHM,5%,0.125W
R1017	315-0390-00	RES.,FXD,CMPSN:39 OHM,5%,0.25W
R1019	315-0390-00	RES.,FXD,CMPSN:39 OHM,5%,0.25W
R1024	315-0681-00	RES.,FXD,CMPSN:680 OHM,5%,0.25W
R1025	321-0164-00	RES.,FXD,FILM:499 OHM,1%,0.125W
R1026	321-0194-00	RES.,FXD,FILM:1.02K OHM,1%,0.125W
R1027	321-0065-00	RES.,FXD,FILM:46.4 OHM,1%,0.125W
R1028	315-0471-00	RES.,FXD,CMPSN:470 OHM,5%,0.25W
R1029	317-0390-00	RES.,FXD,CMPSN:39 OHM,5%,0.125W
R1031	321-0130-00	RES.,FXD,FILM:221 OHM,1%,0.125W
R1033	315-0681-00	RES.,FXD,CMPSN:680 OHM,5%,0.25W
R1035	315-0681-00	RES.,FXD,CMPSN:680 OHM,5%,0.25W

R1036	315-0220-00	RES.,FXD,CMPSN:22 OHM,5%,0.25W
R1037	315-0220-00	RES.,FXD,CMPSN:22 OHM,5%,0.25W
R1038	317-0101-00	RES.,FXD,CMPSN:100 OHM,5%,0.125W
R1044	315-0101-00	RES.,FXD,CMPSN:100 OHM,5%,0.25W
R1046	315-0101-00	RES.,FXD,CMPSN:100 OHM,5%,0.25W
R1047	321-0065-00	RES.,FXD,FILM:46.4 OHM,1%,0.125W
R1048	321-0164-00	RES.,FXD,FILM:499 OHM,1%,0.125W
R2017	315-0152-00	RES.,FXD,CMPSN:1.5K OHM,5%,0.25W
R2018	315-0152-00	RES.,FXD,CMPSN:1.5K OHM,5%,0.25W
R2021	315-0470-00	RES.,FXD,CMPSN:47 OHM,5%,0.25W
R2024	321-0058-00	RES.,FXD,FILM:39.2 OHM,1%,0.125W
R2025	321-0234-00	RES.,FXD,FILM:2.67K OHM,1%,0.125W
R2026	317-0470-00	RES.,FXD,CMPSN:47 OHM,5%,0.125W
R2028	317-0470-00	RES.,FXD,CMPSN:47 OHM,5%,0.125W
R2031	315-0470-00	RES.,FXD,CMPSN:47 OHM,5%,0.25W
R2033	315-0152-00	RES.,FXD,CMPSN:1.5K OHM,5%,0.25W
R2034	315-0152-00	RES.,FXD,CMPSN:1.5K OHM,5%,0.25W
R2036	321-0151-00	RES.,FXD,FILM:365 OHM,1%,0.125W
R2037	315-0102-00	RES.,FXD,CMPSN:1K OHM,5%,0.25W
R2038	315-0821-00	RES.,FXD,CMPSN:820 OHM,5%,0.25W
R2041	315-0104-00	RES.,FXD,CMPSN:100K OHM,5%,0.25W
R2042	321-0051-00	RES.,FXD,FILM:33.2 OHM,1%,0.125W
R2043	315-0471-00	RES.,FXD,CMPSN:470 OHM,5%,0.25W
R2045	315-0471-00	RES.,FXD,CMPSN:470 OHM,5%,0.25W
R2046	317-0103-00	RES.,FXD,CMPSN:10K OHM,5%,0.125W
T2013	120-0902-00	XFMR,TOROID:5 TURNS,BIFILAR

CHANGE TO:

A68A4	670-5535-01	CKT BOARD ASSY:POST V. R. AMPLIFIER
L2021	108-1042-00	COIL,RF:4.7UH
L2031	108-1042-00	COIL,RF:4.7UH
R1029	315-0470-00	RES.,FXD,CMPSN:47 OHM,5%,0.25W
R2038	311-0622-00	RES.,VAR,NONWW:TRMR,100 OHM,0.5W
R2044	301-0821-00	RES.,FXD,CMPSN:820 OHM,5%,0.50W
R2045	301-0821-00	RES.,FXD,CMPSN:820 OHM,5%,0.50W

REMOVE:

C1028	283-0204-00	CAP.,FXD,CER DI:0.01UF,20%,50V
C2036	283-0204-00	CAP.,FXD,CER DI:0.01UF,20%,50V

DESCRIPTION

CHANGE TO:

A69A1	670-5528-01	CKT BOARD ASSY:#1 V.R. RESOL MOTHER
C1066	283-0111-00	CAP.,FXD,CER DI:0.1UF,20%,50V
C1067	283-0111-00	CAP.,FXD,CER DI:0.1UF,20%,50V
C1068	283-0111-00	CAP.,FXD,CER DI:0.1UF,20%,50V
C1069	283-0111-00	CAP.,FXD,CER DI:0.1UF,20%,50V
C1075	283-0111-00	CAP.,FXD,CER DI:0.1UF,20%,50V
C1082	283-0111-00	CAP.,FXD,CER DI:0.1UF,20%,50V
C1083	283-0111-00	CAP.,FXD,CER DI:0.1UF,20%,50V
C1084	283-0111-00	CAP.,FXD,CER DI:0.1UF,20%,50V
C1085	283-0111-00	CAP.,FXD,CER DI:0.1UF,20%,50V
C2076	283-0111-00	CAP.,FXD,CER DI:0.1UF,20%,50V
C2086	283-0111-00	CAP.,FXD,CER DI:0.1UF,20%,50V
C2088	283-0111-00	CAP.,FXD,CER DI:0.1UF,20%,50V
C3019	283-0111-00	CAP.,FXD,CER DI:0.1UF,20%,50V
C3026	283-0111-00	CAP.,FXD,CER DI:0.1UF,20%,50V
C3028	283-0111-00	CAP.,FXD,CER DI:0.1UF,20%,50V
C3029	283-0111-00	CAP.,FXD,CER DI:0.1UF,20%,50V
C3035	283-0111-00	CAP.,FXD,CER DI:0.1UF,20%,50V
C3043	283-0111-00	CAP.,FXD,CER DI:0.1UF,20%,50V
C3048	283-0111-00	CAP.,FXD,CER DI:0.1UF,20%,50V
C3049	283-0111-00	CAP.,FXD,CER DI:0.1UF,20%,50V

REMOVE:

C3072	283-0204-00	CAP.,FXD,CER DI:0.01UF,20%,50V
C3073	283-0204-00	CAP.,FXD,CER DI:0.01UF,20%,50V
C3083	283-0204-00	CAP.,FXD,CER DI:0.01UF,20%,50V
C3088	283-0111-00	CAP.,FXD,CER DI:0.1UF,20%,50V

ADD:

R1065	315-0100-00	RES.,FXD,CMPSN:10 OHM,5%,0.25W
R1066	315-0100-00	RES.,FXD,CMPSN:10 OHM,5%,0.25W
R1067	315-0100-00	RES.,FXD,CMPSN:10 OHM,5%,0.25W
R1068	315-0100-00	RES.,FXD,CMPSN:10 OHM,5%,0.25W
R1075	315-0100-00	RES.,FXD,CMPSN:10 OHM,5%,0.25W
R1082	315-0100-00	RES.,FXD,CMPSN:10 OHM,5%,0.25W
R1083	315-0100-00	RES.,FXD,CMPSN:10 OHM,5%,0.25W
R1084	315-0100-00	RES.,FXD,CMPSN:10 OHM,5%,0.25W
R1085	315-0100-00	RES.,FXD,CMPSN:10 OHM,5%,0.25W
R2076	315-0100-00	RES.,FXD,CMPSN:10 OHM,5%,0.25W
R2086	315-0100-00	RES.,FXD,CMPSN:10 OHM,5%,0.25W
R2088	315-0100-00	RES.,FXD,CMPSN:10 OHM,5%,0.25W
R3019	315-0270-00	RES.,FXD,CMPSN:27 OHM,5%,0.25W
R3026	315-0100-00	RES.,FXD,CMPSN:10 OHM,5%,0.25W
R3028	315-0100-00	RES.,FXD,CMPSN:10 OHM,5%,0.25W
R3029	315-0100-00	RES.,FXD,CMPSN:10 OHM,5%,0.25W
R3035	315-0100-00	RES.,FXD,CMPSN:10 OHM,5%,0.25W
R3043	315-0100-00	RES.,FXD,CMPSN:10 OHM,5%,0.25W
R3048	307-0106-00	RES.,FXD,CMPSN:4.7 OHM,5%,0.25W
R3049	315-0100-00	RES.,FXD,CMPSN:10 OHM,5%,0.25W

CHANGE TO:

A69A2	670-5529-01	CKT BOARD ASSY:V.R. INPUT

REMOVE:

C1014	283-0204-00	CAP.,FXD,CER DI:0.01UF,20%,50V
C1018	283-0111-00	CAP.,FXD,CER DI:0.1UF,20%,50V
R1018	315-0270-00	RES.,FXD,CMPSN:27 OHM,5%,0.25W

ADD:

L1018	108-0395-00	COIL,RF:64UH

CHANGE TO:

A69A3	670-5530-01	CKT BOARD ASSY:1ST FILTER SELECT (XTALS NOT INCLUDED)
C2051	283-0204-00	CAP.,FXD,CER DI:0.01UF,20%,50V
C2057	283-0204-00	CAP.,FXD,CER DI:0.01UF,20%,50V
C3023	281-0245-00	CAP.,VAR,CER DI:7.5-50PF,400V
C3035	281-0245-00	CAP.,VAR,CER DI:7.5-50PF,400V
R2023	321-0026-00	RES.,FXD,FILM:18.2 OHM 1%,0.125W
R2024	321-0143-00	RES.,FXD,FILM:301 OHM,1%,0.125W
R2025	321-0143-00	RES.,FXD,FILM:301 OHM,1%,0.125W

REMOVE:

C2024	283-0618-00	CAP.,FXD,MICA D:130PF,2%,400V
C2025	283-0600-00	CAP.,FXD,CER DI:43PF,5%,500V
C2026	283-0644-00	CAP.,FXD,MICA D:150PF,1%,500V
C2036	283-0647-00	CAP.,FXD,MICA D:70PF,1%,100V
C2040	281-0167-00	CAP.,VAR,CER DI:9-45PF,200V
C2046	281-0167-00	CAP.,VAR,CER DI:9-45PF,200V
C2049	283-0647-00	CAP.,FXD,MICA D:70PF,1%,10V
C3026	281-0167-00	CAP.,VAR,CER DI:9-45PF,200V
C3051	281-0158-00	CAP.,VAR,CER DI:7-45PF,50V
C3052	283-0644-00	CAP.,FXD,MICA D:150PF,1%,500V
C4017	283-0204-00	CAP.,FXD,CER DI:0.01UF,20%,50V
C4018	283-0204-00	CAP.,FXD,CER DI:0.01UF,20%,50V
C4025	283-0204-00	CAP.,FXD,CER DI:0.01UF,20%,50V
C4026	283-0204-00	CAP.,FXD,CER DI:0.01UF,20%,50V
C4030	283-0204-00	CAP.,FXD,CER DI:0.01UF,20%,50V
C4041	283-0204-00	CAP.,FXD,CER DI:0.01UF,20%,50V
C4045	283-0204-00	CAP.,FXD,CER DI:0.01UF,20%,50V
C4049	283-0204-00	CAP.,FXD,CER DI:0.01UF,20%,50V
L2035	108-0964-00	COIL,RF:FIXED,115NH,TOROIDAL INDUCTOR
L2055	108-0964-00	COIL,RF:FIXED,115NH,TOROIDAL INDUCTOR
L3036	108-0964-00	COIL,RF:FIXED,115NH,TOROIDAL INDUCTOR
L3055	108-0964-00	COIL,RF:FIXED,115NH,TOROIDAL INDUCTOR

ADD:

L4018	108-0395-00	COIL,RF:64UH
L4049	108-0395-00	COIL,RF:64UH
T2035	120-1237-00	TRANSFORMER,RF:TOROID,2 WINDS
T2055	120-1237-00	TRANSFORMER,RF:TOROID,2 WINDS
T3026	120-1339-00	TRANSFORMER,RF:TOROID,2 WINDS
T3055	120-1339-00	TRANSFORMER,RF:TOROID,2 WINDS

CHANGE TO:

A69A4	670-5531-02	CKT BOARD ASSY:10 DB GAIN STEPS

The new 670-5531-02 consists of the following parts:

C1017	283-0111-00	CAP.,FXD,CER DI:0.1UF,20%,50V
C1024	283-0111-00	CAP.,FXD,CER DI:0.1UF,20%,50V
C1028	283-0107-00	CAP.,FXD,CER DI:51PF,5%,200V
C1039	283-0111-00	CAP.,FXD,CER DI:0.1UF,20%,50V
C1047	283-0111-00	CAP.,FXD,CER DI:0.1UF,20%,50V
C1057	283-0204-00	CAP.,FXD,CER DI:0.01UF,20%,50V
C1066	283-0111-00	CAP.,FXD,CER DI:0.1UF,20%,50V
C2013	283-0111-00	CAP.,FXD,CER DI:0.1UF,20%,50V
C2018	283-0111-00	CAP.,FXD,CER DI:0.1UF,20%,50V
C2020	283-0204-00	CAP.,FXD,CER DI:0.01UF,20%,50V
C2032	283-0204-00	CAP.,FXD,CER DI:0.01UF,20%,50V
C2046	283-0204-00	CAP.,FXD,CER DI:0.01UF,20%,50V
C2052	283-0204-00	CAP.,FXD,CER DI:0.01UF,20%,50V
C2055	283-0111-00	CAP.,FXD,CER DI:0.1UF,20%,50V
C2059	283-0107-00	CAP.,FXD,CER DI:51PF,5%,200V
C3042	283-0111-00	CAP.,FXD,CER DI:0.1UF,20%,50V
C3045	283-0204-00	CAP.,FXD,CER DI:0.01UF,20%,50V
C3046	283-0111-00	CAP.,FXD,CER DI:0.1UF,20%,50V
C4024	283-0111-00	CAP.,FXD,CER DI:0.1UF,20%,50V
C4028	283-0111-00	CAP.,FXD,CER DI:0.1UF,20%,50V
C4046	283-0111-00	CAP.,FXD,CER DI:0.1UF,20%,50V
C4054	283-0111-00	CAP.,FXD,CER DI:0.1UF,20%,50V
C4059	283-0111-00	CAP.,FXD,CER DI:0.1UF,20%,50V
C4064	283-0111-00	CAP.,FXD,CER DI:0.1UF,20%,50V
CR1053	152-0524-00	SEMICOND DEVICE:SILICON,100V,100MA
Q1036	151-0282-00	TRANSISTOR:SILICON,NPN
Q2015	151-0301-00	TRANSISTOR:SILICON,PNP
Q2027	151-0282-00	TRANSISTOR:SILICON,NPN
Q2043	151-0282-00	TRANSISTOR:SILICON,NPN
Q2056	151-0282-00	TRANSISTOR:SILICON,NPN
Q3016	151-0282-00	TRANSISTOR:SILICON,NPN
Q3055	151-0282-00	TRANSISTOR:SILICON,NPN
Q3064	151-0650-00	TRANSISTOR:SILICON,NPN
Q4039	151-0301-00	TRANSISTOR:SILICON,PNP
R1016	315-0221-00	RES.,FXD,CMPSN:220 OHM,5%,0.25W
R1022	315-0151-00	RES.,FXD,CMPSN:150 OHM,5%,0.25W
R1031	315-0101-00	RES.,FXD,CMPSN:100 OHM,5%,0.25W
R1026	315-0681-00	RES.,FXD,CMPSN:680 OHM,5%,0.25W
R1032	315-0390-00	RES.,FXD,CMPSN:39 OHM,5%,0.25W
R1041	315-0681-00	RES.,FXD,CMPSN:680 OHM,5%,0.25W
R1046	315-0470-00	RES.,FXD,CMPSN:47 OHM,5%,0.25W
R1050	315-0470-00	RES.,FXD,CMPSN:47 OHM,5%,0.25W
R1052	321-0239-00	RES.,FXD,FILM:3.01K OHM,1%,0.125W
R1056	321-0058-00	RES.,FXD,FILM:39.2 OHM,1%,0.125W
R1060	321-0194-00	RES.,FXD,FILM:1.02K OHM,1%,0.125W
R1062	321-0164-00	RES.,FXD,FILM:499 OHM,1%,0.125W
R1064	321-0065-00	RES.,FXD,FILM:46.4 OHM,1%,0.125W
R2011	315-0472-00	RES.,FXD,CMPSN:4.7K OHM,5%,0.25W
R2012	315-0472-00	RES.,FXD,CMPSN:4.7K OHM,5%,0.25W

		DESCRIPTION
R2018	315-0104-00	RES.,FXD,CMPSN:100K OHM,5%,0.25W
R2023	315-0681-00	RES.,FXD,CMPSN:680 OHM,5%,0.25W
R2025	311-0635-00	RES.,VAR.NONWW:TRMR.1K OHM,0.5W
R2031	321-0194-00	RES.,FXD,FILM:1.02K OHM,1%,0.125W
R2034	321-0164-00	RES.,FXD,FILM:499 OHM,1%,0.125W
R2035	321-0065-00	RES.,FXD,FILM:46.4 OHM,1%,0.1
R2039	321-0130-00	RES.,FXD,FILM:221 OHM,1%,0.125W
R2042	315-0390-00	RES.,FXD,CMPSN:39 OHM,5%,0.25W
R2048	321-0097-00	RES.,FXD,FILM:100 OHM,1%,0.125W
R2051	315-0152-00	RES.,FXD,CMPSN:1.5K OHM,5%,0.25W
R2053	315-0152-00	RES.,FXD,CMPSN:1.5K OHM,5%,0.25W
R2057	315-0681-00	RES.,FXD,CMPSN:680 OHM,5%,0.25W
R2063	315-0101-00	RES.,FXD,CMPSN:100 OHM,5%,0.25W
R2069	301-0201-00	RES.,FXD,CMPSN:200 OHM,5%,0.25W
R3014	315-0472-00	RES.,FXD,CMPSN:4.7K OHM,5%,0.25W
R3015	315-0390-00	RES.,FXD,CMPSN:39 OHM,5%,0.25W
R3022	315-0222-00	RES.,FXD,CMPSN:2.2K OHM,5%,0.25W
R3026	315-0222-00	RES.,FXD,CMPSN:2.2K OHM,5%,0.25W
R3029	321-0032-00	RES.,FXD,FILM:21 OHM,1%,0.125W
R3035	311-0622-00	RES.,VAR,NONWW:TRMR,100 OHM,0.5W
R3038	321-0026-00	RES.,FXD,FILM:18.2 OHM,1%,0.125W
R3039	315-0104-00	RES.,FXD,CMPSN:100K OHM,5%,0.25W
R3044	315-0101-00	RES.,FXD,CMPSN:100 OHM,5%,0.25W
R3048	315-0222-00	RES.,FXD,CMPSN:2.2K OHM,5%,0.25W
R3050	321-0164-00	RES.,VAR,FILM:499 OHM,1%,0.125W
R3052	315-0390-00	RES.,FXD,CMPSN:39 OHM,5%,0.25W
R3059	315-0681-00	RES.,FXD,CMPSN:680 OHM,5%,0.25W
R4013	321-0160-00	RES.,FXD,FILM:453 OHM,1%,0.125W
R4026	315-0151-00	RES.,FXD,CMPSN:150 OHM,5%,0.25W
R4030	315-0102-00	RES.,FXD,CMPSN:1K OHM,5%,0.25W
R4033	315-0102-00	RES.,FXD,CMPSN:1K OHM,5%,0.25W
R4035	315-0222-00	RES.,FXD,CMPSN:2.2K OHM,5%,0.25W
R4045	321-0164-00	RES.,FXD,FILM:499 OHM,1%,0.125W
R4049	315-0221-00	RES.,FXD,CMPSN:220 OHM,5%,0.25W
R4052	315-0181-00	RES.,FXD,CMPSN:180 OHM,5%,0.25W
R4056	315-0272-00	RES.,FXD,CMPSN:2.7K OHM,5%,0.25W
R4057	315-0272-00	RES.,FXD,CMPSN:2.7K OHM,5%,0.25W
R4061	315-0220-00	RES.,FXD,CMPSN:22 OHM,5%,0.25W
R4062	315-0272-00	RES.,FXD,CMPSN:2.7K OHM,5%,0.25W
R4066	315-0220-00	RES.,FXD,CMPSN:22 OHM,5%,0.25W
T4019	120-1431-00	TRANSFORMER,RF:3-1 TURNS RATIO

CHANGE TO:

A69A5	670-5532-02	CKT BOARD ASSY:20 DB GAIN STEPS

The new 670-5532-02 board consists of the following parts:

C1041	283-0111-00	CAP.,FXD,CER DI:0.1UF,20%,50V
C1018	283-0204-00	CAP.,FXD,CER DI:0.01UF,20%,50V
C1019	283-0204-00	CAP.,FXD,CER DI:0.01UF,20%,50V
C1022	283-0204-00	CAP.,FXD,CER DI:0.01UF,20%,50V
C1026	283-0204-00	CAP.,FXD,CER DI:0.01UF,20%,50V
C1031	283-0204-00	CAP.,FXD,CER DI:0.01UF,20%,50V
C1042	283-0204-00	CAP.,FXD,CER DI:0.01UF,20%,50V
C1045	283-0111-00	CAP.,FXD,CER DI:0.1UF,20%,50V
C2023	283-0204-00	CAP.,FXD,CER DI:0.01UF,20%,50V
C2032	283-0204-00	CAP.,FXD,CER DI:0.01UF,20%,50V
C2042	283-0204-00	CAP.,FXD,CER DI:0.01UF,20%,50V
C2051	283-0204-00	CAP.,FXD,CER DI:0.01UF,20%,50V
C2053	283-0204-00	CAP.,FXD,CER DI:0.01UF,20%,50V
C2059	283-0204-00	CAP.,FXD,CER DI:0.01UF,20%,50V
C2061	283-0204-00	CAP.,FXD,CER DI:0.01UF,20%,50V
C2069	283-0204-00	CAP.,FXD,CER DI:0.01UF,20%,50V
Q1025	151-0302-00	TRANSISTOR:SILICON,NPN
Q1035	151-0302-00	TRANSISTOR:SILICON,NPN
Q1043	151-0302-00	TRANSISTOR:SILICON,NPN
Q1062	151-0301-00	TRANSISTOR:SILICON,PNP
Q2018	151-0301-00	TRANSISTOR:SILICON,PNP
Q2042	151-0301-00	TRANSISTOR:SILICON,PNP
R1015	321-0175-00	RES.,FXD,FILM:649 OHM,1%,0.125W
R1019	317-0101-00	RES.,FXD,CMPSN:100 OHM,5%,0.124W
R1024	321-0130-00	RES.,FXD,FILM:221 OHM,1%,0.125W
R1025	317-0331-00	RES.,FXD,CMPSN:330 OHM,5%,0.125W
R1026	321-0114-00	RES.,FXD,FILM:150 OHM,1%,0.125W
R1032	321-0026-00	RES.,FXD,FILM:18.2 OHM,1%,0.125W
R1037	321-0143-00	RES.,FXD,FILM:301 OHM,1%,0 125W
R1038	317-0222-00	RES.,FXD,CMPSN:2.2K OHM,5%,0.125W
R1041	317-0331-00	RES.,FXD,CMPSN:330 OHM,5%,0.125W
R1042	321-0194-00	RES.,FXD,FILM:1.02K OHM,1%,0.125W
R1045	317-0331-00	RES.,FXD,CMPSN:330 OHM,5%,0.125W
R1049	315-0101-00	RES.,FXD,CMPSN:100 OHM,5%,0.25W
R1056	317-0104-00	RES.,FXD,COMPSN:100K OHM,5%,0.125W
R1063	311-0622-00	RES.,VAR,NONWW:TRMR,100 OHM,0.5W
R1064	315-0101-00	RES.,FXD,CMPSN:100 OHM,5%,0.25W
R1065	317-0222-00	RES.,FXD,CMPSN:2.2K OHM,5%,0.125W
R2014	315-0122-00	RES.,FXD,CMPSN:1.2K OHM,5%,0.25W
R2019	317-0222-00	RES.,FXD,CMPSN:2.2K OHM,5%,0.125W
R2021	317-0104-00	RES.,FXD,COMPSN:100K OHM,5%,0.125W
R2022	317-0222-00	RES.,FXD,CMPSN:2.2K OHM,5%,0.125W
R2025	311-0622-00	RES.,VAR,NONWW:TRMR,100 OHM,0.5W
R2026	315-0101-00	RES.,FXD,CMPSN:100 OHM,5%,0.25W
R2031	315-0101-00	RES.,FXD,CMPSN:100 OHM,5%,0.25W
R2039	317-0222-00	RES.,FXD,CMPSN:2.2K OHM,5%,0.125W
R2044	321-0114-00	RES.,FXD,FILM:150 OHM,1%,0.125W
R2045	321-0085-00	RES.,FXD,FILM:75 OHM,1%,0.125W
R2046	317-0104-00	RES.,FXD,COMPSN:100K OHM,5%,0.125W
R2051	315-0102-00	RES.,FXD,CMPSN:1K OHM,5%,0.25W
R2052	315-0102-00	RES.,FXD,CMPSN:1K OHM,5%,0.25W
R2061	321-0097-00	RES.,FXD,FILM:100 OHM,1%,0.125W
R2062	321-0026-00	RES.,FXD,FILM:18.2 OHM,1%,0.125W
R2063	317-0222-00	RES.,FXD,CMPSN:2.2K OHM,5%,0.125W

VARIABLE RESOLUTION DIAGRAM 19

ASSEMBLY A68A1

CIRCUIT NUMBER	SCHEM LOCATION	BOARD LOCATION
C1077	F4	G1
C2011	A4	A2
C2015	A3	A2
C2018	C4	B2
C2023	D3	B2
C2033	E3	C2
C2076	F4	G1
C2079	F4	G3
C3019	A4	B4
C3027	A5	C4
C3041	C3	D3
C3042	A5	D3
C4027	A5	C4
C4035	C3	C4
C4037	B3	C4
C4038	B3	C4
C4039	A5	C4
CR3022	E4	B3
CR3023	E4	B3
CR3024	E4	B3
CR3025	E5	B3
CR3026	E5	C3
CR3027	E5	C3
CR3031	E5	C3
CR3033	A3	C3
CR3034	A3	C4
CR4029	B3	C4
E4039	A5	C4
L4025	A5	B4
L4031	A5	C4
Q3035	B3	C3
Q3036	D3	C3
Q4035	C3	C4
Q4037	B3	D4
R2014	A3	A3
R2026	E3	B2
R2031	D3	C3
R2033	D3	C3
R2035	D3	C2
R2038	D3	D2
R3014	A3	A3
R3015	A3	A4
R3019	D4	B3
R3020	D4	B3
R3021	D4	B3
R3022	D4	B3
R3023	D4	B4
R3024	D4	B3
R3025	D5	B4
R3026	D5	B3
R3027	D5	C3
R3028	D5	B4
R3029	D5	C3
R3030	D4	C3
R3031	D5	C3
R3032	D5	C3
R3033	D4	C3
R3034	D3	C3
R3035	C3	C3
R3036	D3	C3
R3037	B3	C3
R3038	D3	C3
R3039	C3	C3
R3041	C3	D3
R3042	C3	D3
R3043	B3	C3
R3044	B4	D3
R3045	A4	C4
R4026	D5	B4
R4029	B3	C4
R4031	B3	C4
U3010	A4	A3
U3017	A3	A3
U3023	C4	B3
U3038A	E3	C3
U3038B	C3	C3
U3041	A5	C3
U4022	A5	C3

VARIABLE RESOLUTION NO.2 DIAGRAM 20

ASSEMBLY A68A2

CIRCUIT NUMBER	SCHEM LOCATION	BOARD LOCATION
C1015	A1	A1
C1025	B4	B1
C1035	C3	C1
C1041	B2	D1
C1047	C2	D1
C1059	B1	E1
C1060	C1	F1
C2016	C4	A2
C2018	B5	B2
C2019	B5	B2
C2028	B4	B2
C2030	B3	C2
C2033	B3	C2
C2041	C2	D2
C2050	D2	E2
C2054	C1	E2
C2063	B3	F2
C2064	B3	F2
C2070	B2	G2
C3025	C3	C3
C3048	C2	D2
C3063	B3	F3
C3065	B4	F3
C3067	B4	F3
C4049	D2	E4
C4050	D2	E3
C5054	D2	E5
C5055	D2	F5
C6011	D5	A6
C6020	D4	B6
C6052	D2	E6
C6053	E2	E6
C6064	E2	F5
C6065	C1	F5
C6072	E1	G5
C6073	E1	G6
C7011	D5	A7
C7061	E3	F7
C8016	D4	B8
C8025	E5	B8
C8027	E5	C8
C8040	D3	D8
C8045	E4	D8
C8046	E4	E8
C8057	D3	F8
C8061	E3	F8
C8075	E3	G7
CR1017	B4	A1
CR1019	B4	A1
CR1020	B4	B1
CR1022	B3	B1
CR1025	B3	B1
CR1029	B3	B1
CR1038	B2	C1
CR1040	B2	D1
CR1050	B1	E1
CR1052	B1	E1
CR7065	E2	G7
CR7067	E2	G7
CR7070	E1	G7
CR7071	E1	G7
CR8015	E4	B8
CR8016	E4	B8
CR8035	E4	C8
CR8036	E3	C8
CR8059	E3	F8
CR8060	E3	F8
L1019	B4	A1
L1025	B4	B1
L1032	B3	C1
L1045	B2	D1
L1055	B1	E1
L2013	B5	A2
L2075	A2	G1
L3055	C2	E3
L4060	D2	F4
L6056	E2	F6
L7075	E1	G6
L8020	E4	B8
L8040	E4	D8
L8061	E3	F8
L8070	E5	G8
Q2020	C5	B3
Q2025	C4	B2
Q2035	C3	C2
Q2040	C2	D2
Q2055	C1	E2
Q6065	E2	F6
Q6075	E1	G5
Q7060	E3	F7
Q8035	E5	C8
Q8050	E4	E8
R1033	B3	C1
R1035	C3	C1
R1050	C1	E1
R1055	B1	E1
R1059	B1	F1
R1065	C1	F1
R1069	C1	F1
R2013	B5	A3
R2016	B5	A2
R2020	C5	B2
R2025	B4	B2
R2026	C4	B2
R2030	B4	C2
R2034	B3	C2
R2037	B3	C2
R2040	C2	D2
R2043	B2	D2
R2044	B2	D2
R2045	B2	D2
R2047	C2	D2
R2048	C2	E1
R2049	C2	E2
R2059	C1	F2
R2060	C1	F2
R2065	C1	F2
R3015	C4	A3
R3016	C4	A3
R3019	C4	B3
R3020	C4	B3
R3022	B5	B3
R3024	B5	B3
R3025	C3	C3
R3028	B4	B2
R3029	C3	C4
R3031	C4	C4
R3035	C3	C3
R3039	C3	D3
R4016	C4	A3
R4032	C3	C4
R4035	C3	C4
R5074	E1	G5
R5075	E1	G5
R6060	D2	F6
R6061	E2	F6
R6065	E2	G5
R6066	E2	G6
R6070	D1	G6
R6075	E1	G6
R7060	D3	F7
R7061	E3	F6
R7062	E3	F7
R7063	E3	F7
R8026	D5	B8
R8027	E5	B8
R8030	E5	C8
R8035	E5	C8
R8046	D4	E8
R8049	E4	E8
R8050	E4	E8
R8055	E4	E8
R8070	E5	G7
T4019	C4	B4
T4040	C3	D4
T5030	C3	C5
T6040	D3	D7
T6045	D3	E6
T7015	D4	B7
U3070	B3	G3
Y5012	D4	A5
Y5035	D3	D6
Y5046	D2	E5
Y7019	D4	B6

ASSEMBLY A68A3

CIRCUIT NUMBER	SCHEM LOCATION	BOARD LOCATION	CIRCUIT NUMBER	SCHEM LOCATION	BOARD LOCATION	CIRCUIT NUMBER	SCHEM LOCATION	BOARD LOCATION	CIRCUIT NUMBER	SCHEM LOCATION	BOARD LOCATION
C1015	D1	A1	CR2021	D2	B2	R1026	D1	B1	R2025	D2	B2
C1017	D1	A1				R1027	D1	B1	R2026	D2	B2
C1021	D1	B1	Q1025	D1	B1	R1028	D1	B1	R2028	D2	B2
C1025	D1	B1	Q1031	E1	C1	R1029	E1	C1	R2031	E2	C2
C1032	E1	C1	Q1033	E1	C1	R1031	E1	C1	R2033	E2	C2
C1035	E1	C1	Q1041	E1	D1	R1033	E1	C1	R2034	E2	C2
C1039	E1	C1	Q2015	C1	A2	R1035	E1	C1	R2036	E1	C2
C1044	F1	D1	Q2019	D1	A2	R1036	E1	C1	R2037	F2	C2
C2015	D2	A2	Q2046	F2	D2	R1037	F1	C1	R2038	F2	C2
C2018	D1	A2				R1038	E1	C1	R2041	F2	D2
C2023	D1	B2	R1013	C1	A1	R1044	F1	D1	R2042	F2	D2
C2028	D2	B2	R1014	C1	A1	R1046	F1	D1	R2043	E2	D2
C2029	D2	B2	R1015	D1	A1	R1047	F1	D1	R2045	E2	D2
C2033	E2	C2	R1016	D1	A1	R1048	F1	D1	R2046	E2	D2
C2034	E1	C2	R1017	D1	A1	R2017	D2	A2			
C2042	E2	D2	R1019	D1	A1	R2018	D2	A2	T2013	C1	A2
C2043	E2	D2	R1024	D1	B1	R2021	D2	B2			
C2046	F1	D2	R1025	D1	B1	R2024	D2	B2			

ASSEMBLY A68A4

CIRCUIT NUMBER	SCHEM LOCATION	BOARD LOCATION	CIRCUIT NUMBER	SCHEM LOCATION	BOARD LOCATION	CIRCUIT NUMBER	SCHEM LOCATION	BOARD LOCATION	CIRCUIT NUMBER	SCHEM LOCATION	BOARD LOCATION
C1022	F3	B1	C2033	F2	B2	R1029	F1	B1	R2045	F3	C2
C1023	F3	B1	C2038	F3	B2	R1039	F2	C1	R2052	F3	C2
C1029	F2	B1	C2062	F4	C2	R1052	F2	D1	R2062	F3	D2
C1033	F2	B1	C2063	F3	C2	R1058	F2	D1			
C1044	F2	C1				R2036	F4	C2	T1038	F2	C1
C1052	F2	C1	L2021	F3	A2	R2038	F4	B2	T1059	F2	D1
C2018	F4	A2	L2031	F2	B2	R2041	F4	C2	T2063	F3	D2
C2023	F3	B2				R2042	F2	C2			
C2025	F3	B2	Q1048	F2	C1	R2043	F4	C2			
C2026	F3	B2	Q2056	F3	D2	R2044	F2	C2			

VARIABLE RESOLUTION NO.1 DIAGRAM 18

ASSEMBLY A69A1

CIRCUIT NUMBER	SCHEM LOCATION	BOARD LOCATION	CIRCUIT NUMBER	SCHEM LOCATION	BOARD LOCATION	CIRCUIT NUMBER	SCHEM LOCATION	BOARD LOCATION	CIRCUIT NUMBER	SCHEM LOCATION	BOARD LOCATION
C1066	E5	F1	C3029	B3	B2	L3066	A2	F3	R2088	H2	NA
C1067	A5	F1	C3035	C3	B3				R3019	A2	A3
C1068	D5	F2	C3043	B3	D3	R1065	A5	F1	R3026	A5	B3
C1069	C5	F1	C3045	B3	C3	R1066	C5	F1	R3028	B3	B3
C1075	E5	G2	C3048	B2	E3	R1067	E5	F1	R3029	B2	B3
C1082	A4	H1	C3049	B3	E3	R1068	D5	F2	R3035	C3	B3
C1083	A5	H1	C3062	A2	F3	R1075	E5	G2	R3043	B3	D3
C1084	A5	H1	C3066	A3	F3	R1082	A4	H2	R3045	B3	C3
C2076	B4	G2	C3077	A4	G3	R1083	A5	H1	R3048	A2	E3
C2086	A4	H3	C3083	A4	H3	R1084	A5	H1	R3049	B3	E3
C3019	A2	A3	C3088	A4	H3	R1085	H1	NA	R3081	A4	H3
C3026	A5	B3				R2076	B4	G2			
C3028	B3	B3	L3065	A3	F3	R2086	A4	H2			

ASSEMBLY A69A2

CIRCUIT NUMBER	SCHEM LOCATION	BOARD LOCATION	CIRCUIT NUMBER	SCHEM LOCATION	BOARD LOCATION	CIRCUIT NUMBER	SCHEM LOCATION	BOARD LOCATION	CIRCUIT NUMBER	SCHEM LOCATION	BOARD LOCATION
C1016	B2	A1	C1033	A1	C1	L1033	A1	C1	R1023	B2	B1
C1019	B2	A1	C1035	A1	C1				R1024	B2	B1
C1022	B2	B1	C1036	A1	C1	Q1023	B2	B1	R1025	B2	B1
C1025	B2	B1	C1037	A1	C1				R1026	B2	B1
C1026	B2	B1				R1014	C1	A1			
C1031	B2	C1	L1018	A1	A1	R1015	C1	A1	T1019	B2	A1
C1032	B2	C1	L1027	B2	B1	R1022	B2	B1			

ASSEMBLY A69A3

CIRCUIT NUMBER	SCHEM LOCATION	BOARD LOCATION
C1014	D2	A1
C1015	D1	A1
C1016	D1	A1
C1017	D1	A1
C1021	D2	B1
C1030	E2	B1
C1035	C2	C3
C1054	E2	E1
C1055	E2	E1
C1056	E2	E1
C1060	F3	F1
C2012	D2	A2
C2013	D3	A2
C2015	D2	A2
C2016	D2	A1
C2017	D3	A2
C2019	D2	A2
C2020	D3	A2
C2029	E2	B2
C2037	E3	D2
C2051	E2	F2
C2054	E2	E2
C2057	E3	F2
C2058	E2	F2
C2060	E3	F2
C3011	C1	A3
C3014	D4	A3
C3016	D4	A3
C3017	D4	A3
C3018	D4	A3
C3020	D4	B3
C3023	D4	B3
C3024	D4	B3
C3030	D4	C3
C3035	D4	C3
C3038	E4	D3
C3048	E4	E3
C3056	E4	E3
C3058	E4	F3
C3059	E3	F3
C4015	D4	A4
C4022	E4	B4
C4029	C3	B4
C4031	C3	C4
C4032	C3	C4
C4038	C3	C4
C4039	C3	C4
C4040	B2	D4
C4054	F1	E4
C4054	F1	E4
C4056	E4	E4
C4057	F1	F4

CIRCUIT NUMBER	SCHEM LOCATION	BOARD LOCATION
C4057	F1	F4
C4059	E4	F4
C4069	F1	F4
C4069	F1	F4
CR1010	C1	A1
CR1011	C1	A1
CR1012	C1	A1
CR1013	C2	A1
CR1017	D1	A1
CR1018	D1	A2
CR1021	D1	B1
CR1022	D1	A1
CR1055	F2	E1
CR1059	F2	F1
CR2010	C2	A2
CR2011	C2	A2
CR2012	C3	A2
CR2012	C3	A2
CR2013	C3	A2
CR2055	F2	E2
CR2059	F2	F2
CR2062	F3	F2
CR2066	F3	F2
CR3010	C3	A2
CR3011	C3	A3
CR3012	C3	A3
CR3014	C3	A3
CR3060	F4	F3
CR3061	F4	F3
CR3062	F4	F4
CR4064	F1	F4
CR4064	F1	F4
CR4065	F1	F4
CR4068	F4	F4
L1011	D2	A1
L1012	D1	A1
L1059	E2	F1
L1061	F4	F1
L2011	D2	A2
L2012	D3	A2
L2060	E2	F2
L2062	E3	F3
L3012	C3	A3
L3013	D4	A3
L3014	D4	A3
L3029	D3	B3
L3040	D3	D3
L3059	E4	F3
L4018	B2	A4
L4043	B2	D4

CIRCUIT NUMBER	SCHEM LOCATION	BOARD LOCATION
L4049	B3	E4
L4058	F1	F4
L4058	F1	F4
L4065	E4	F4
Q1019	D2	A1
Q1020	D1	B1
Q1055	F2	E1
Q2019	D3	A2
Q2020	D3	A2
Q2050	E3	E2
Q3019	D4	A3
Q3055	E4	E3
Q3060	E3	F3
Q4019	D5	A4
Q4050	F1	E4
Q4050	F1	E4
Q4055	E5	E4
R1015	C2	A1
R1016	D1	A1
R1017	C1	A1
R1017	D1	A1
R1018	C2	A1
R1019	D1	B1
R1020	D2	B1
R1022	D1	B1
R1022	D1	B1
R1026	D2	B1
R1027	D2	B1
R1028	D2	B1
R1054	E2	E1
R1055	E2	E1
R1057	E2	F1
R1058	E2	F1
R1067	F4	F2
R2013	D3	A2
R2014	D2	A2
R2015	D2	A2
R2016	D3	A2
R2017	D3	A2
R2018	D3	A2
R2019	D3	B2
R2020	D3	A2
R2023	D2	B2
R2024	D2	B1
R2025	D2	B2
R2026	D3	B2
R2027	D3	B2
R2028	D3	B2
R2049	E3	E2
R2050	E3	E2

CIRCUIT NUMBER	SCHEM LOCATION	BOARD LOCATION
R2055	E3	E2
R2056	E2	E2
R3014	D4	A3
R3015	D3	A2
R3016	D4	A3
R3017	D4	A3
R3018	D4	A3
R3019	D4	A3
R3020	D4	A3
R3050	E4	E3
R3053	D4	E4
R3056	E4	E3
R3057	E4	E3
R3059	E3	F3
R3060	E3	F3
R3061	E3	F3
R3063	E3	F3
R4012	C3	A4
R4015	D4	A4
R4016	D4	A4
R4017	D4	A4
R4019	C4	A4
R4020	D5	B3
R[illegible]	D5	B3
R4048	F1	D4
R4048	F1	D4
R4049	F1	E4
R4049	F1	E4
R4050	E5	D4
R4053	E5	E4
R4054	E4	E4
R4055	E4	E4
R4056	F1	E4
R4056	F1	E4
R4057	F1	E4
R4057	F1	E4
T1025	D2	B1
T1039	E2	D1
T2035	D2	C2
T2055	E2	E2
T3026	D3	B2
T3055	E3	E3
U4035	C3	C4
Y1030	E2	C1
Y1045	E2	D1
Y2036	E3	C2
Y2043	E2	D2
Y3046	E3	D3

ASSEMBLY A69A4

CIRCUIT NUMBER	SCHEM LOCATION	BOARD LOCATION	CIRCUIT NUMBER	SCHEM LOCATION	BOARD LOCATION	CIRCUIT NUMBER	SCHEM LOCATION	BOARD LOCATION	CIRCUIT NUMBER	SCHEM LOCATION	BOARD LOCATION
C1017	G4	A1	C4064	G4	F3	R1056	H5	E1	R3026	G3	B3
C1024	G2	B1				R1060	H5	E1	R3029	G3	C3
C1028	G2	B1	CR1053	H5	E1	R1062	H5	F1	R3035	G4	C3
C1039	G2	C1				R1064	H5	F1	R3038	G3	C2
C1047	H5	D1	Q1036	G2	C1	R2011	G4	A2	R3039	G4	C3
C1057	H5	E1	Q2015	G3	A2	R2012	F5	A2	R3044	G5	D3
C1066	H5	F1	Q2027	G2	B2	R2018	G3	A2	R3048	H3	D3
C2013	F5	A2	Q2043	H3	D2	R2023	G2	B2	R3050	G5	E3
C2018	G3	A2	Q2056	H5	E2	R2025	G3	B2	R3052	G5	E3
C2020	G2	B2	Q3016	G2	A3	R2031	G3	B2	R3059	G4	E3
C2032	G3	B2	Q3055	G5	E3	R2034	G2	C2	R4013	F2	A4
C2046	G3	D2	Q3064	H4	F3	R2035	G3	C2	R4026	G3	B3
C2052	H5	E2	Q4039	G5	C3	R2039	G3	C2	R4030	G5	C3
C2055	G5	E2				R2042	G3	D2	R4033	G5	C3
C2059	H5	E2	R1016	G4	A1	R2048	H3	D2	R4036	G5	C3
C3042	G5	D3	R1022	G2	B1	R2051	G5	E2	R4045	H3	D4
C3045	G4	D3	R1026	G2	B1	R2053	H5	E2	R4049	H3	D4
C3046	G3	D3	R1031	G2	C1	R2057	H4	E2	R4052	H5	E4
C4024	G3	B3	R1032	G2	C1	R2063	H5	F2	R4061	G4	F3
C4028	G5	B4	R1041	G2	C1	R2069	H5	F2	R4066	H4	F3
C4046	H3	D4	R1046	H5	D1	R3014	F5	A3			
C4054	G5	E4	R1050	H5	E1	R3015	G2	A3			
C4059	G4	E4	R1052	H5	E1	R3022	G3	B3			

ASSEMBLY A69A5

CIRCUIT NUMBER	SCHEM LOCATION	BOARD LOCATION	CIRCUIT NUMBER	SCHEM LOCATION	BOARD LOCATION	CIRCUIT NUMBER	SCHEM LOCATION	BOARD LOCATION	CIRCUIT NUMBER	SCHEM LOCATION	BOARD LOCATION
C1018	A1	A1	C2061	C2	F2	R1026	A1	B1	R2021	A2	A1
C1019	A1	A1	C2069	B2	F2	R1032	A1	C1	R2022	A2	B2
C1022	B1	B1				R1037	B1	C1	R2025	A1	B2
C1026	A1	B1	Q1025	A1	B1	R1038	B2	C1	R2026	A2	C2
C1031	A1	C1	Q1035	B1	C1	R1041	B1	D1	R2031	A2	C2
C1041	B1	D1	Q1043	C1	D1	R1042	C1	D1	R2039	A2	C2
C1042	B1	D1	Q1062	B2	F1	R1045	C1	D1	R2044	B1	D2
C1045	C1	D1	Q2018	A2	A2	R1049	C1	D1	R2045	B1	D2
C2023	A1	B2	Q2042	B2	D2	R1056	C2	E1	R2046	B2	D2
C2032	B1	C2				R1063	B2	F1	R2051	B2	E2
C2042	B1	D2	R1015	B1	A1	R1064	B2	F1	R2052	C2	E2
C2051	C1	E2	R1019	A1	A1	R1065	C2	F1	R2061	C2	E2
C2053	B2	E2	R1024	A1	B1	R2014	A1	A2	R2062	C2	F2
C2059	C2	E2	R1025	A1	B1	R2019	A2	A2			

DIAGRAM 21 VR #2 - Partial

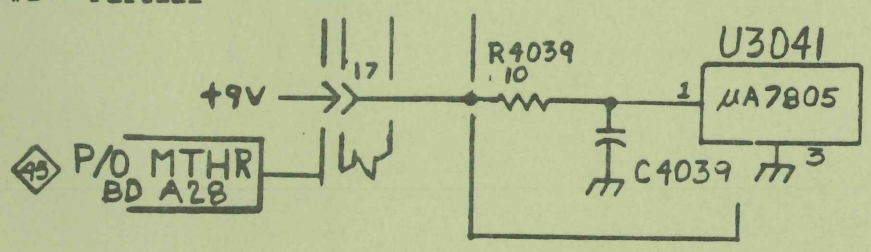

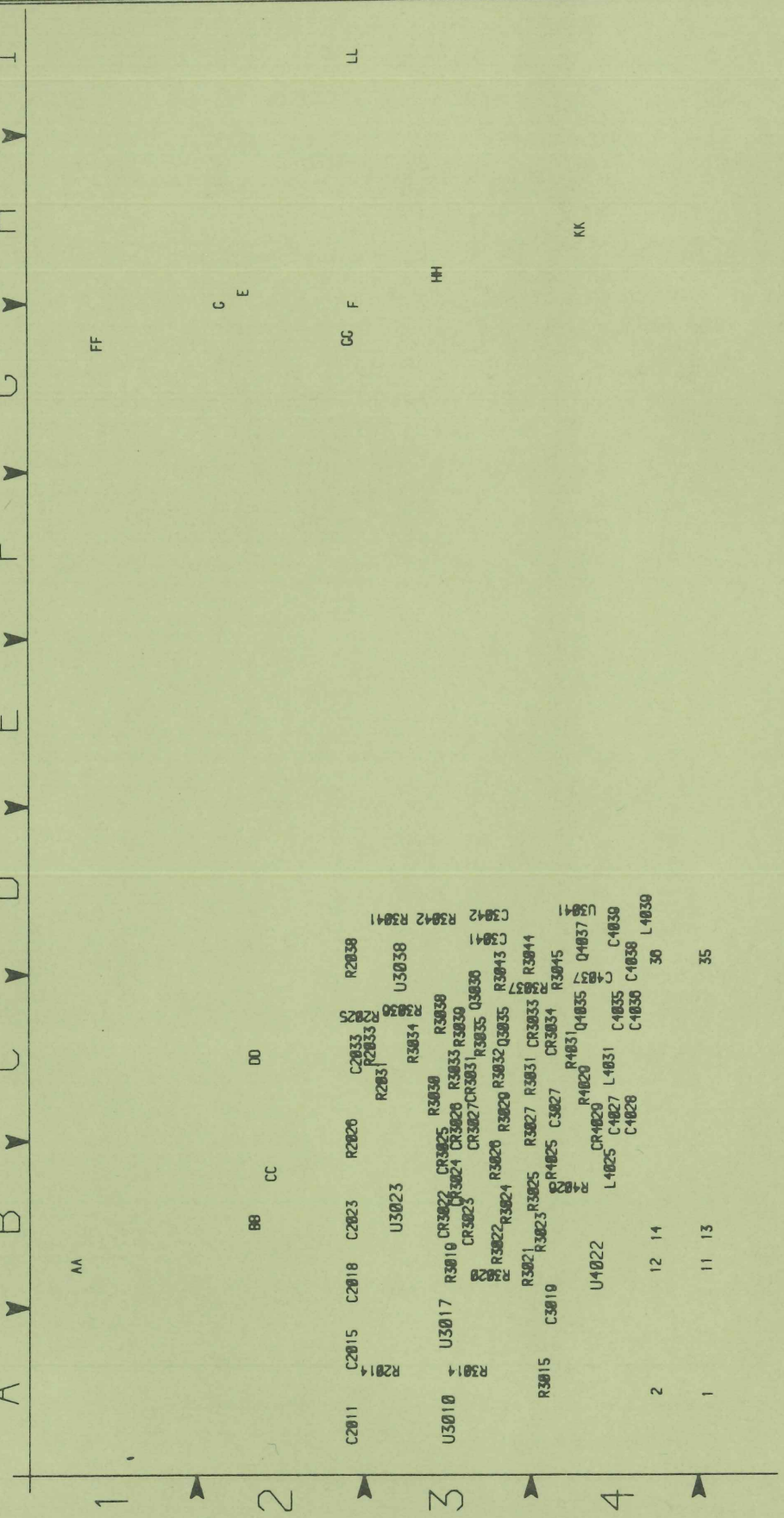

H-6063-05 #2 VR MOTHER A68A1

@ 2852 - 151A

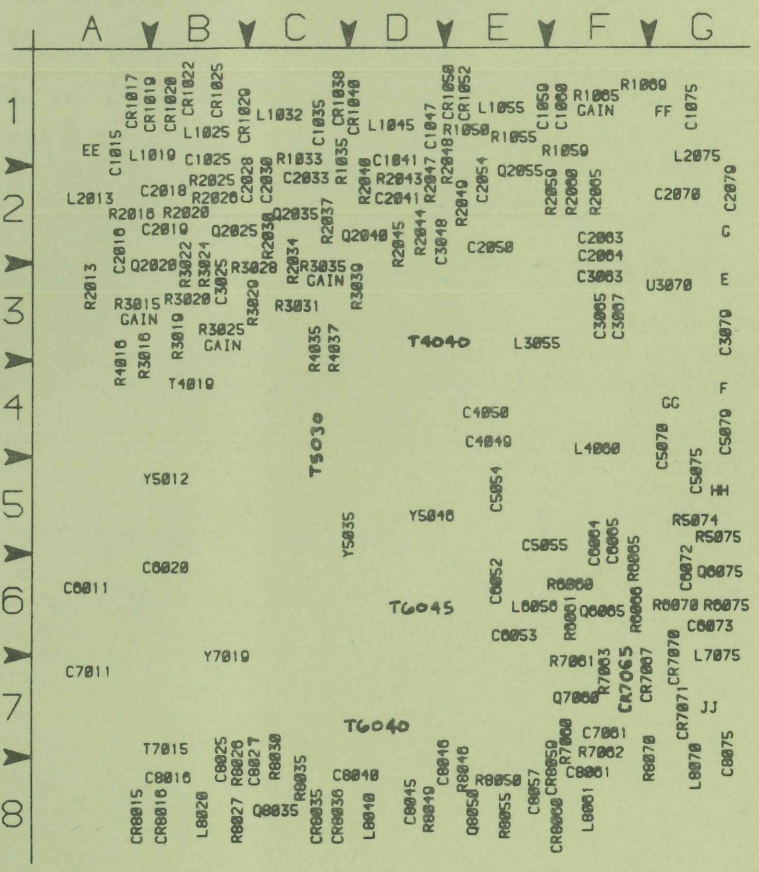

HA-6061-**04** 2nd FILTER SELECT A68A2

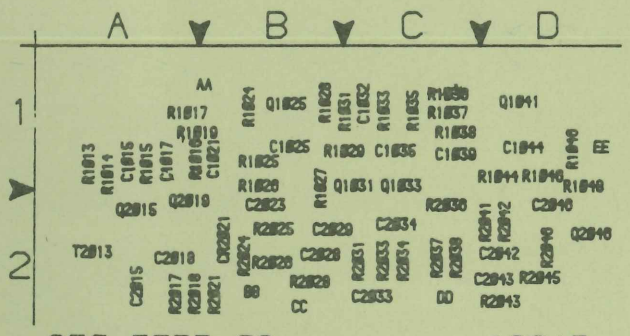

670-5533-02 A68A3

BAND LEVELING

@ 2852-153A

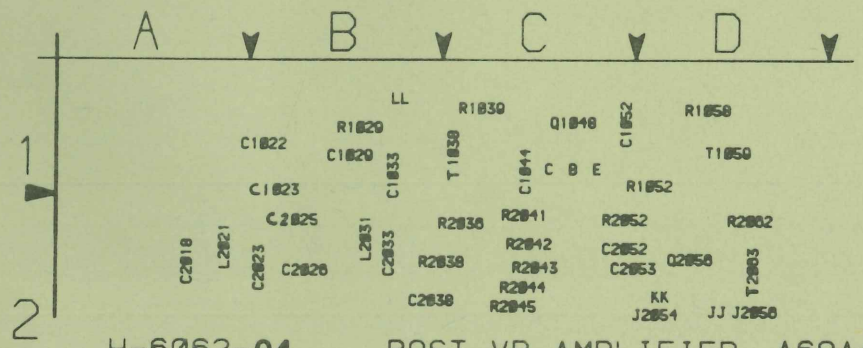

H-6062-**04** POST VR AMPLIFIER A68A4

@ 2852-157A

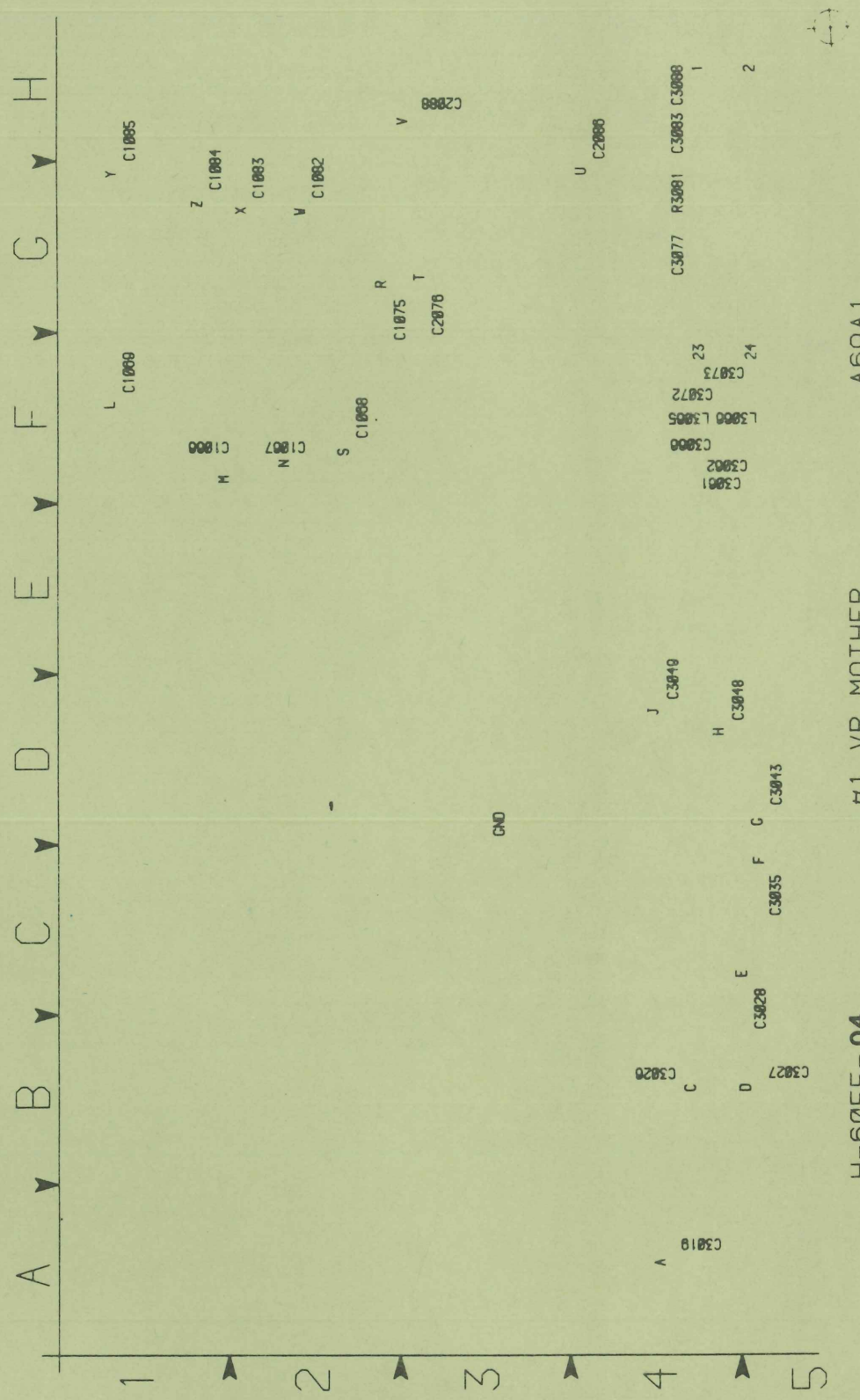
A B C D E F G H
1 2 3 4 5
C1085
C1084
C1083
C1082
C2088
C2086
C1080
C1075
C2076
C1086
C1087
C1088
C3077
R3081
C3083
C3088
C3073
C3072
L3066
L3065
C3066
C3062
C3061
C3049
C3048
C3043
C3035
C3028
C3027
C3026
C3019
GND
H-6055-04
#1 VR MOTHER
@ 2852-145A
A69A1

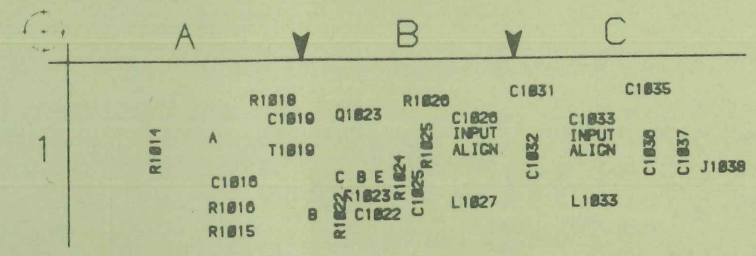

H-6056-04 VR INPUT A69A2

@ 2852-146A

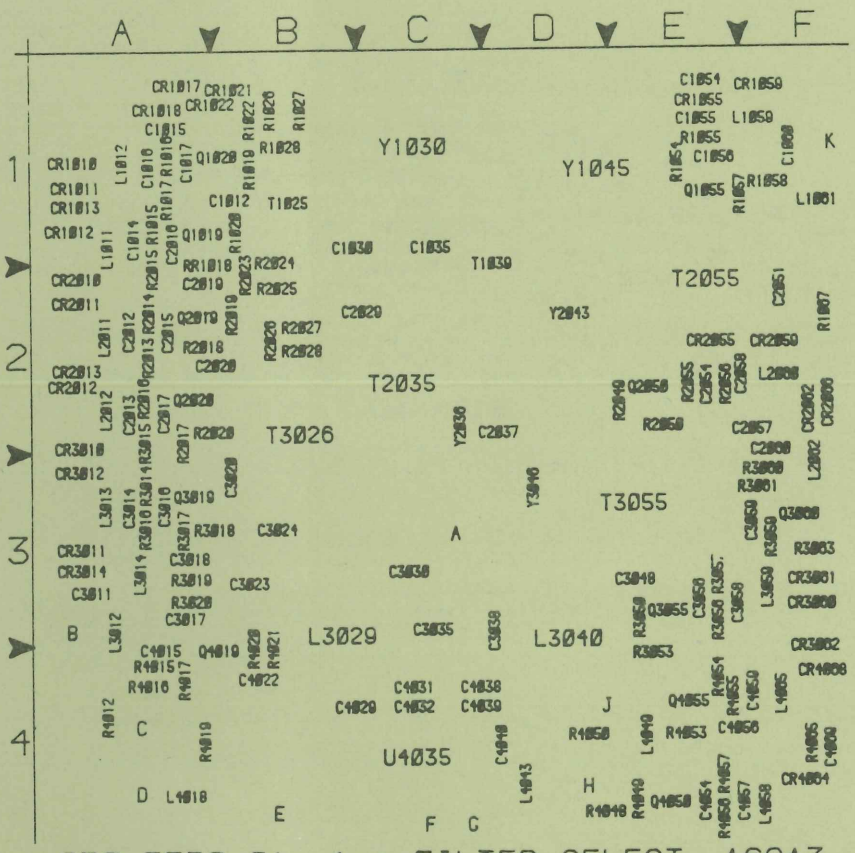

670-5530-01 1st FILTER SELECT A69A3

@2852-147A

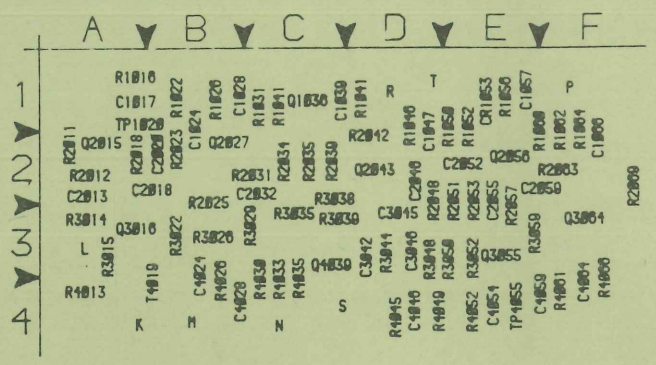

670-5531-02 A69A4

10 dB GAIN STEP

@2852-148A

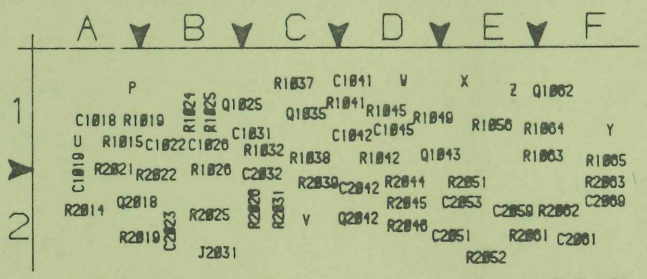

670-5532-02 A69A5

20 dB GAIN STEP

@2852-152A

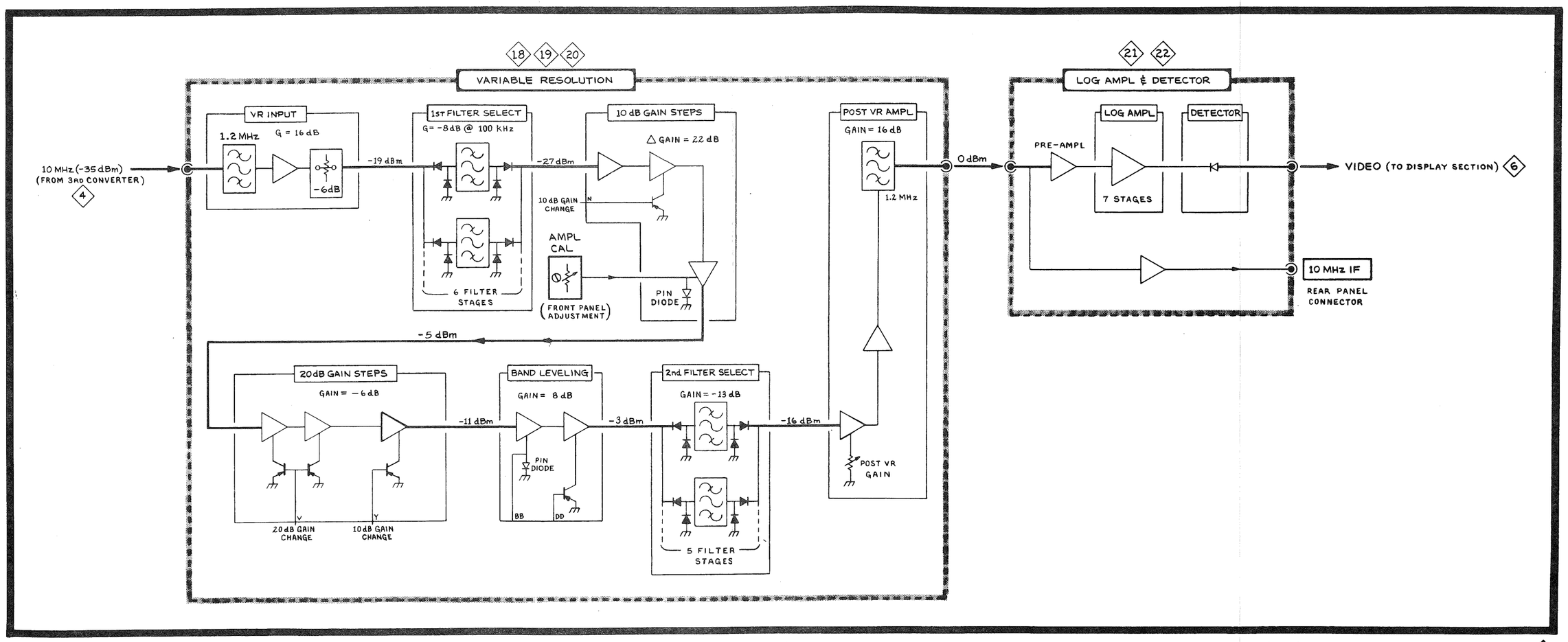

IF SECTION BLOCK DIAGRAM 5 A

050-1467-01

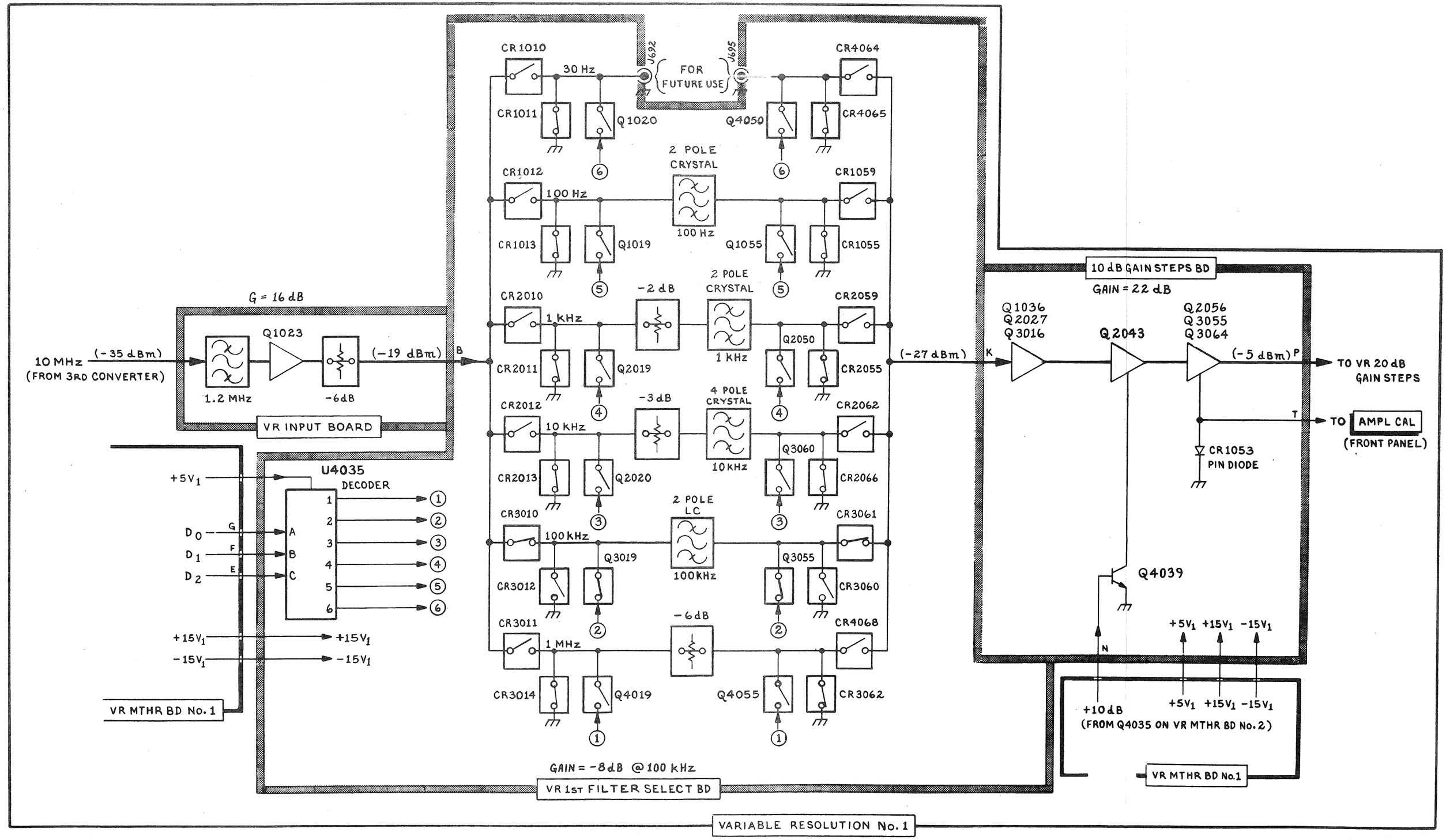
G = 16 dB
10 MHz
(FROM 3RD CONVERTER)
(-35 dBm)
1.2 MHz
Q1023
-6dB
(-19 dBm)
B
VR INPUT BOARD
+5V1
D0
D1
D2
G
F
E
U4035
DECODER
A
B
C
1
2
3
4
5
6
+15V1
-15V1
VR MTHR BD No. 1
CR1010
30 Hz
CR1011
Q1020
J692
FOR
FUTURE USE
J695
CR4064
Q4050
CR4065
2 POLE
CRYSTAL
CR1012
100 Hz
100 Hz
CR1059
CR1013
Q1019
Q1055
CR1055
CR2010
1 KHz
-2 dB
2 POLE
CRYSTAL
1 KHz
CR2059
CR2011
Q2019
Q2050
CR2055
CR2012
10 KHz
-3 dB
4 POLE
CRYSTAL
10 KHz
CR2062
CR2013
Q2020
Q3060
CR2066
CR3010
100 kHz
2 POLE
LC
100 kHz
CR3061
CR3012
Q3019
Q3055
CR3060
CR3011
1 MHz
-6 dB
CR4068
CR3014
Q4019
Q4055
CR3062
GAIN = -8dB @ 100 kHz
VR 1ST FILTER SELECT BD
(-27 dBm)
K
10 dB GAIN STEPS BD
GAIN = 22 dB
Q1036
Q2027
Q3016
Q2043
Q2056
Q3055
Q3064
(-5 dBm) P
TO VR 20 dB
GAIN STEPS
T
TO AMPL CAL
(FRONT PANEL)
CR1053
PIN DIODE
Q4039
N
+5V1 +15V1 -15V1
+10 dB
(FROM Q4035 ON VR MTHR BD No. 2)
+5V1 +15V1 -15V1
VR MTHR BD No.1
VARIABLE RESOLUTION No. 1

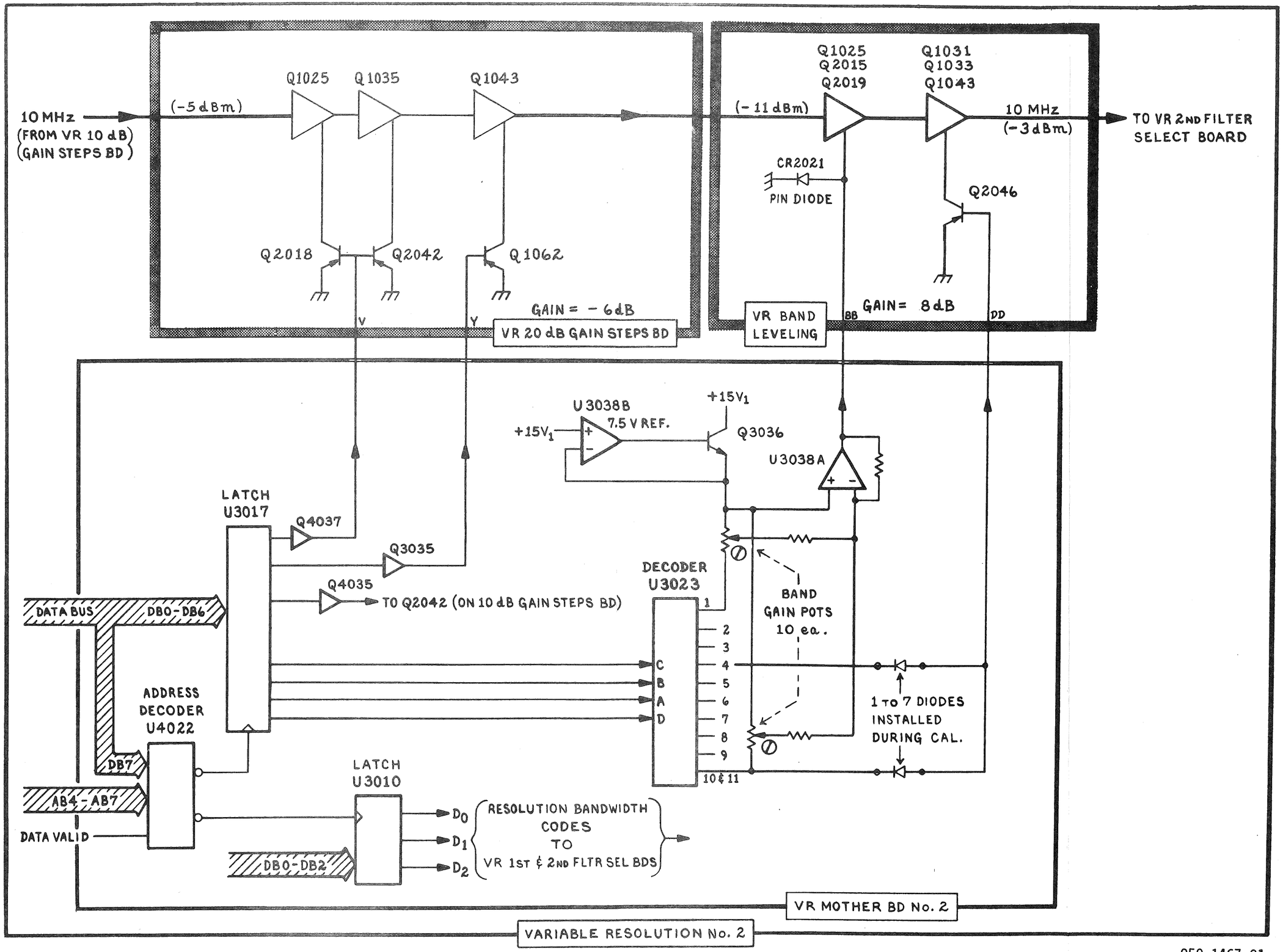
10 MHz
(FROM VR 10 dB
GAIN STEPS BD)
(-5 dBm)
Q1025
Q1035
Q1043
Q2018
Q2042
Q1062
GAIN = -6dB
VR 20 dB GAIN STEPS BD
V
Y
Q1025
Q2015
Q2019
Q1031
Q1033
Q1043
(-11 dBm)
10 MHz
(-3 dBm)
TO VR 2ND FILTER
SELECT BOARD
CR2021
PIN DIODE
Q2046
VR BAND
LEVELING
BB
GAIN = 8dB
DD
U3038B
7.5 V REF.
+15V1
+15V1
Q3036
U3038A
LATCH
U3017
Q4037
Q3035
Q4035
TO Q2042 (ON 10 dB GAIN STEPS BD)
DECODER
U3023
BAND
GAIN POTS
10 ea.
DATA BUS
DB0-DB6
ADDRESS
DECODER
U4022
DB7
AB4-AB7
DATA VALID
LATCH
U3010
DB0-DB2
D0
D1
D2
RESOLUTION BANDWIDTH
CODES
TO
VR 1ST & 2ND FLTR SEL BDS
1 TO 7 DIODES
INSTALLED
DURING CAL.
VR MOTHER BD No. 2
VARIABLE RESOLUTION No. 2

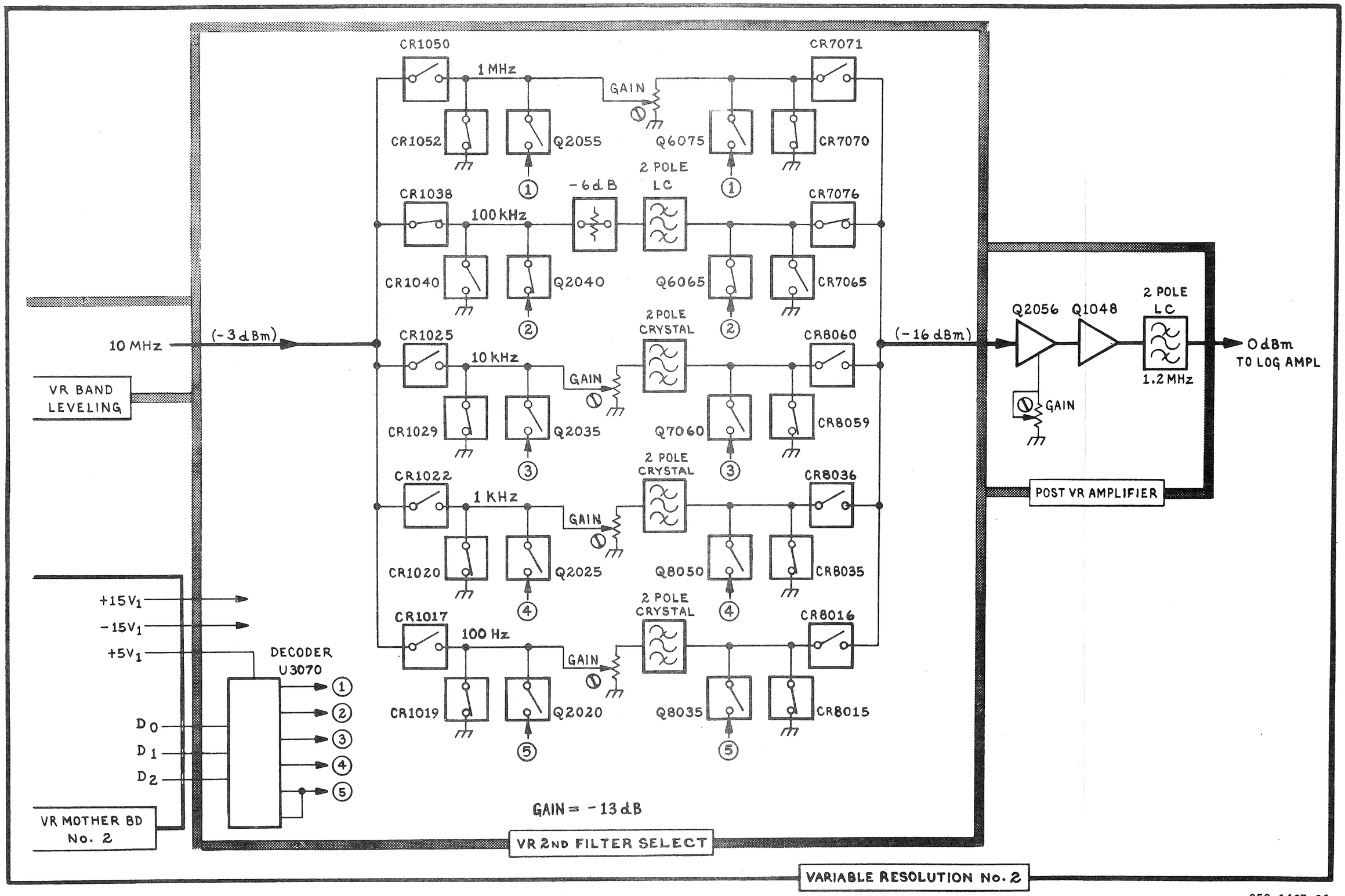
CR1050
1 MHz
GAIN
CR7071
CR1052
Q2055
Q6075
CR7070
2 POLE
LC
-6dB
CR1038
100 kHz
CR7076
CR1040
Q2040
Q6065
CR7065
2 POLE
CRYSTAL
10 MHz
(-3dBm)
CR1025
10 kHz
CR8060
(-16 dBm)
Q2056
Q1048
2 POLE
LC
1.2 MHz
0dBm
TO LOG AMPL
VR BAND
LEVELING
GAIN
CR1029
Q2035
Q7060
CR8059
POST VR AMPLIFIER
CR1022
1 KHz
CR8036
CR1020
Q2025
Q8050
CR8035
+15V1
-15V1
+5V1
CR1017
100 Hz
CR8016
DECODER
U3070
D0
D1
D2
CR1019
Q2020
Q8035
CR8015
VR MOTHER BD
No. 2
GAIN = -13 dB
VR 2ND FILTER SELECT
VARIABLE RESOLUTION No. 2