INSTRUCTION MANUAL

MODEL 1038-D14

MAINFRAME

MODEL 1038-D14

PM PACIFIC MEASUREMENTS INCORPORATED

INSTRUCTION MANUAL

MAINFRAME
MODEL 1038-D14

SERIAL NUMBER 424

PACIFIC MEASUREMENTS INCORPORATED

488 TASMAN DRIVE, SUNNYVALE, CALIFORNIA 94086

TEL: (408) 734-5780 TWX: (910) 339-9273

1499-14937
Code 06[07-80]

CERTIFICATION

PACIFIC MEASUREMENTS INC. ("PM") certifies that this instrument was thoroughly tested and inspected and found to meet all its published specifications when it was shipped from the factory. PM further certifies that its calibration measurements are traceable to the U.S. National Bureau of Standards to the extent allowed by the Bureau's calibration facility.

ONE YEAR LIMITED WARRANTY

PACIFIC MEASUREMENTS INC. ("PM") warrants to the original purchaser, and only the original purchaser, that this instrument will be free from defects in material and workmanship, under normal recommended use and operating conditions, for a period of one year after the date of delivery to the original purchaser.

PM's obligation under this Warranty is limited to (1) repairing or replacing, at PM's option, any part or parts (excluding RF diodes, RF connectors, batteries, and fuses) which are returned to PM in the manner specified below and which, upon inspection by PM's personnel, are determined to be defective as described above; and (2) calibrating the repaired instrument to current published specifications. If it is determined that the instrument is not defective, a nominal inspection charge will be charged and the instrument will be returned with transportation charges collect. If it is determined that the defect has been caused by misuse and/or abnormal operating conditions or that the instrument is not under Warranty, an estimate will be submitted prior to the commencement of necessary repair and calibration work. If the purchaser does not authorize PM to commence such repairs within fifteen days after such estimate is submitted, the instrument will be returned to the purchaser transportation charges collect.

PM'S OBLIGATION TO REPAIR OR REPLACE DEFECTIVE PARTS, AS DESCRIBED ABOVE, SHALL BE THE PURCHASER'S EXCLUSIVE REMEDY AND NO OTHER REMEDY SHALL BE AVAILABLE (INCLUDING, BUT NOT LIMITED TO, INCIDENTAL OR CONSEQUENTIAL DAMAGES FOR LOST PROFITS, LOST SALES, OTHER ECONOMIC LOSS, INJURY TO PERSON OR PROPERTY, OR ANY OTHER INCIDENTAL OR CONSEQUENTIAL LOSS SUSTAINED BY THE ORIGINAL PURCHASER OR ANY OTHER PERSON).

THE WARRANTY DESCRIBED ABOVE IS THE ONLY WARRANTY APPLICABLE TO THIS PM INSTRUMENT AND IS MADE EXPRESSLY IN LIEU OF ANY AND ALL OTHER WARRANTIES, EXPRESSED OR IMPLIED, INCLUDING BUT NOT LIMITED TO ANY WARRANTY OF MERCHANTABILITY, FITNESS FOR A PARTICULAR PURPOSE, OR INFRINGEMENT.

WARRANTY PROCEDURE AND SHIPPING INSTRUCTIONS

If any fault develops, the following steps should be taken:

a. Notify PM immediately, giving model number, serial or part number, code number, and a detailed description of the nature and/or conditions of failure. On receipt of this information, service, operating, or shipping instructions will be supplied to you.

b. On receipt of shipping instructions, ship the instrument transportation prepaid to PM. The instrument should be shipped in the original shipping carton or, if damaged or not available, in a suitable rigid container with the instrument wrapped in paper or plastic and surrounded with at least four inches or cushioning material on all sides. If under Warranty, the instrument will be repaired and returned transportation prepaid.

RECEIVING INSTRUCTIONS

The instrument must be thoroughly inspected immediately upon receipt. All material in the shipping container should be checked against the enclosed packing list. PM will not be responsible for shortages against the packing list unless notified immediately. Upon receipt of shipment, if there is any visible evidence of damages, make a notation on the way bill of such damage and immediately contact the nearest office of the carrier in your city. If there is evidence of damage after the goods are unpacked, contact the nearest office of the carrier, request an inspection, and save all packing and materials therein until the inspection has been completed. A full report of the damage should be obtained by the carrier's claim agent, and a copy of this report forwarded to PM. Upon receipt of this report, you will be advised of the disposition of the equipment for repair or replacement. PM shall have no responsibility for damaged instruments if the above inspection requirements are not complied with. Time is of the essence regarding the above instructions.

TABLE OF CONTENTS

SECTION 1

GENERAL INFORMATION

1.1 PACIFIC MEASUREMENTS MODEL 1038-D14 MAINFRAME

The Model 1038-D14 is a CRT display/mainframe capable of accepting 1038 swept measurement system plug-ins. In addition to its provision for interconnecting the system plug-ins to the display unit, the mainframe:

- supplies low voltage regulated power to the system plug-ins;
- amplifies vertical and horizontal signals for deflection drive;
- stores display signals in digital memory;
- provides auxiliary inputs and outputs separate from the plug-in modules;
- optionally interfaces the system via an IEEE (GPIB) bus per STD488-1978.

Electronic switching between the two vertical channels is provided, allowing them to time-share the beam for simultaneous presentation of both channels.

The auxiliary inputs and outputs are located on the rear panel, along with a multi-pin connector used to operate auxiliary equipment. The four BNC auxiliary inputs are tied in parallel to four lines on the multi-pin connector. The remaining four BNC connectors provide output voltages proportional to the beam deflection for the horizontal and both vertical channels plus an input for external blanking. The beam deflection BNC outputs are tied in parallel to three lines on an eight-pin connector (J6) for the Model 1044A Response Recorder.

1.2 CRT DISPLAY SUB-ASSEMBLY

The display portion of the 1038-D14 comprises a single beam CRT, power supply, storage and deflection circuitry. The CRT is furnished with a P31 phosphor and features a digital refresh memory to allow viewing slow sweep displays. Filters are available to reduce glare if desired.

1.3 MAINFRAME PERFORMANCE SPECIFICATIONS

Table 1-1 gives the specification for the Model 1038 mainframe and D14 display unit. Tables 1-2 and 1-3 give pin assignments and power supplies furnished to the system via the input/output connector and the optional IEEE Interconnect board.

TABLE 1-1

PERFORMANCE SPECIFICATIONS

REAR PANEL CONNECTORS	
DISPLAY UNIT	A CHAN OUT
	B CHAN OUT
	HORIZ OUT
	BLANKING IN
	+ = BLANK
	- = UNBLANK
Connector	BNC Jack
Output Coefficient	100 mV/division
Coefficient Accuracy	±2%
Output voltage with spot centered on CRT face	OV, within 25mV

(Continued)

TABLE 1-1 SPECIFICATIONS (Contd)

Impedance	Approximately 0 ohms
Response Recorder Output	For 1044 Series
Connector	14 pin, Amphenol 57-40140
Vertical Coefficient	100 mV/division
Horizontal Coefficient	100 mV/division
Coefficient Accuracy	±1%
Output voltage with spot centered on CRT face	OV, within 50mV
PLUG-IN CHASSIS UNIT	
INPUT/OUTPUT	AUX 1, AUX 2, AUX 3, AUX 4
Connector	BNC Jack
Signals	Dependent upon plug-ins
INPUT/OUTPUT	
Connector	Amphenol type 57-40360
Signals	See Table 1-2 and plug-in manuals
IEEE INTERCONNECT	Optional
Connector	24 pin, Amphenol 552791-2
Signals	See Table 1-3
Format	IEEE 488 GPIB
CRT DISPLAY	
Electron gun	Single beam
Display area	4" x 5" (8 x 10 divisions)
Phosphor	P31
Memory modes	Channel A: continuous line
	Channel B: dashed line
	Saved Data: storage mode
TEMPERATURE RANGE	
Operating	0 to +50°C (+32 to +122°F)
Non-Operating	-40 to +70°C (-40 to +158°F)

(Continued)

TABLE 1-1 SPECIFICATIONS (Contd)

ALTITUDE	
Operating	to 4600m (15,000 ft.)
Non-Operating	to 15000m (50,000 ft.)
DIMENSIONS	
Bench (HxWxD)	38x21.6x48.3cm (15"x8.5"x19")
Rack (HxWxD)	18x48.3x48.3cm (7"x19"x19")
SHIPPING WEIGHT	18.2kg (40 lbs.)
POWER REQUIREMENTS	100/120/220/240V rms within ±10%, 50-440Hz
Fuse Rating	2.0A slow blow (120V ac) 1.0A slow blow (240V ac)

TABLE 1-2

INPUT/OUTPUT CONNECTOR PIN ASSIGNMENTS

PIN NO.	CONNECTION	PIN NO.	CONNECTION
1	+15V	19	+15V
2	-15V	20	-15V
3	15V Common	21	15V Common
4		22	
5		23	
6		24	
7	+5V	25	+5V
8	5V Common	26	5V Common
9	AUX. 3 Common	27	AUX. 3
10	AUX. 4 Common	28	AUX. 4
11	AUX. 4	29	B/X
12	AUX. 4 Common	30	INTENSITY
13	A/X	31	RATIO Common
14	AUX. 2 Common	32	AUX. 2
15	AUX. 2	33	
16	AUX. 2 Common	34	LINE FREQUENCY
17		35	
18	AUX. 1	36	AUX. 1 Common

Unlisted pin assignments indicate no connection.

TABLE 1-3

IEEE INTERCONNECT PIN ASSIGNMENTS

PIN NO.	CONNECTION	PIN NO.	CONNECTION
A1	LAC	B1	TAC
A2	SRQ	B2	
A3	OUTPUT A	B3	HORIZ +
A4	ANALOG Common	B4	OUTPUT B
A5	5V Common	B5	5V Common
A6	+5V	B6	+5V
A7	15V Common	B7	15V Common
A8	-15V	B8	-15V
A9	+15V	B9	+15V
A10	DATA BUS 3	B10	DATA BUS Ø
A11	DATA BUS 1	B11	DATA BUS 2
A12	INPUT RATIO A/X	B12	INPUT RATIO B/X

SECTION 2

INITIAL INSTRUCTIONS

2.1 RECEIVING INSPECTION

Inspect the instrument for shipping damage. See the receiving instruction under "Warranty" on page i at the beginning of the manual.

2.2 POWER REQUIREMENT

WARNING: BEFORE APPLYING AC MAINS POWER TO THE INSTRUMENT, BE SURE THAT THE INSTRUMENT IS SET FOR THE CORRECT LINE VOLTAGE.

The unit is set at the factory for operation at the normal supply voltage for the country in which it is sold. The input must be 50-440Hz. The combination of the module and transformer design allows instrument operation on 100, 120, 220, or 240 volts. Conversion from one voltage to another may be made by changing the voltage selection p.c. board. (See Figure 2-1.)

2.3 CHASSIS GROUNDING

DANGER: FAILURE TO PROPERLY GROUND THE INSTRUMENT CAN ALLOW HIGH VOLTAGES TO BUILD UP ON THE CHASSIS. THE VOLTAGE LEVELS COULD BE DANGEROUS TO OPERATING PERSONNEL.

The instrument is supplied with a three-conductor NEMA type power cord. The current carrying conductor is white and its return is black.

The green wire is for connection to earth ground. The instrument will be properly grounded if the plug is connected into a properly installed three-prong receptacle. If a three-prong to two-prong adapter is used, be sure that the pigtail lead of the adapter is grounded.

2.4 RETURNING THE INSTRUMENT

If it should be necessary to return the instrument to Pacific Measurements, see the shipping instructions under "Warranty", page i at the beginning of the manual.

2.5 ACCESSORIES

The following accessories are supplied with each instrument:

Qty	Part Number	Description
1	12356	Power Cord
1		Instruction Manual

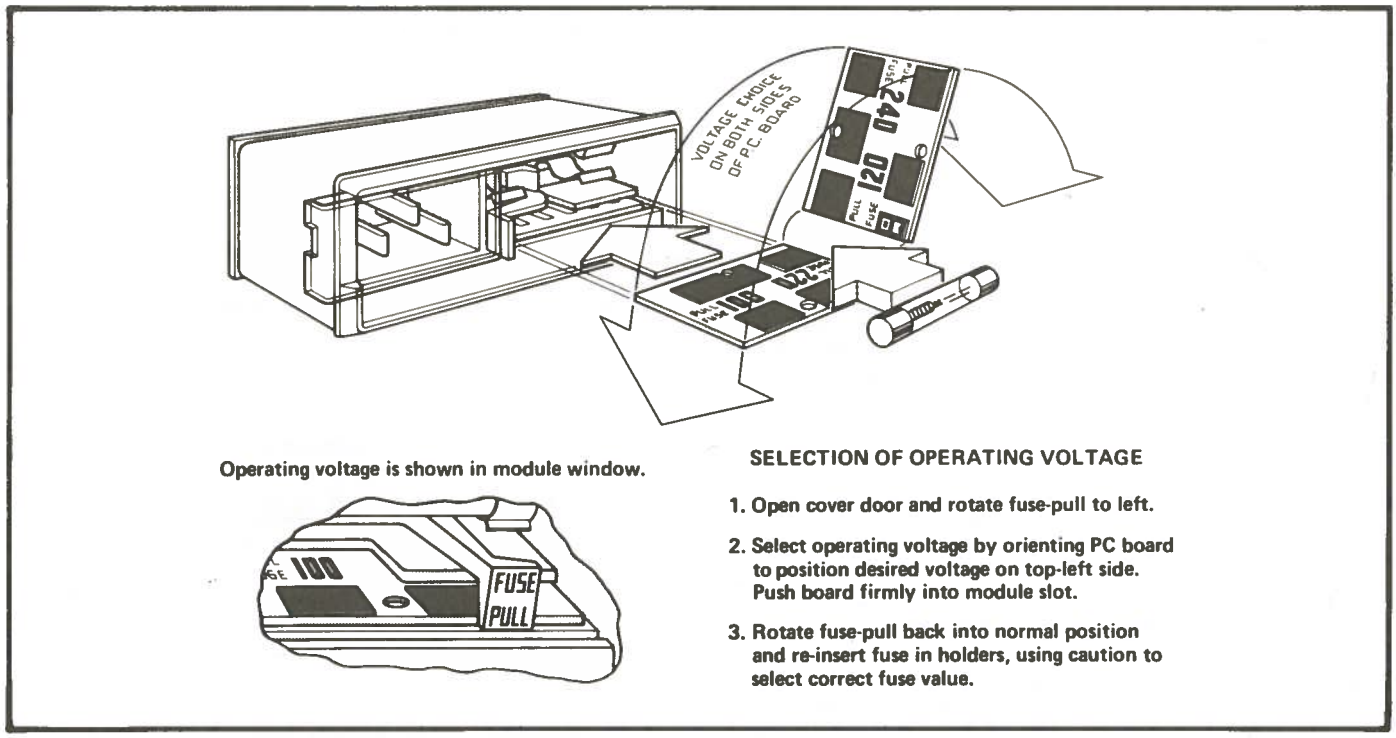

VOLTAGE SELECTION
FIGURE 2-1

2.6 ACCESSORIES (OPTIONAL)

Part No.	Description	Shipping Weight
12777	Viewing Hood	1.4 kg (3 lbs)
12954	Marker Input Cable	0.46 kg (1 lb)
12715	Plug-in Extender Kit	0.46 kg (1 lb)

SECTION 3

OPERATION

3.1 INTRODUCTION

The Model 1038-D14 Mainframe uses several plug-in modules to function as a measurement system. The purpose of this section is to provide detailed operating instructions only for the mainframe and its CRT display. Separate instruction manuals are available containing operating information for the plug-in modules.

3.2 REAR PANEL CONNECTORS

A photograph of the rear panel appears in Figure 3-1.

a. A CHAN OUT/B CHAN OUT. This 50 ohm BNC connector supplies voltage proportional to the vertical CRT deflection, regardless of display mode. Scale factor is 100 mV per CRT division.

b. HORIZ OUT. A 50 ohm BNC connector to furnish a signal proportional to the horizontal CRT deflection, with 100 mV per CRT division scale factor.

c. BLANKING IN. A BNC connector is provided to operate the Z-axis or intensity control via external TTL level. A low TTL logic level unblanks the display.

d. RESPONSE RECORDER OUTPUT. This 14-pin connector is for use with the Model 1044A Response Recorder.

e. AUX 1 THROUGH AUX 4. These BNC connectors provide access to and from the plug-ins via the Interconnect circuit.

f. INPUT/OUTPUT. This multi-pin connector provides signal and power supply connections for the accessory equipment. Signals present depend upon the plug-ins used with the instrument.

3.3 CRT DISPLAY OPERATION

DANGER: HIGH VOLTAGE IS PRESENT INSIDE THE INSTRUMENT. TO AVOID ELECTRICAL SHOCK HAZARD, DO NOT OPERATE WITH THE PROTECTIVE COVER PANELS REMOVED. DO NOT ATTEMPT TO SERVICE THE INSTRUMENT UNLESS FULLY QUALIFIED AND THOROUGHLY FAMILIAR WITH ALL AREAS OF POTENTIAL HAZARD.

This portion of text should be reviewed by the user before attempting to use the 1038-D14 measurement system. Plug-ins for this instrument are not interchangeable with plug-ins designed by other manufacturers.

3.3.1 OPERATING POWER

1. *DANGER: THIS INSTRUMENT IS INTENDED TO BE OPERATED FROM A SINGLE-PHASE, EARTH REFERENCED POWER SOURCE HAVING ONE CURRENT-CARRYING CONDUCTOR (NEUTRAL) NEAR EARTH POTENTIAL. DO NOT OPERATE FROM POWER SOURCES WHERE BOTH CURRENT-CARRYING CONDUCTORS ARE LIVE WITH RESPECT TO EARTH (SUCH AS PHASE-TO-PHASE ON A THREE WIRE SYSTEM).*

DO NOT TRY TO DEFEAT THE GROUNDING CONNECTION. ANY INTERRUPTION OF THE GROUNDING CONNECTION CAN CREATE AN ELECTRICAL SHOCK HAZARD. BEFORE MAKING EXTERNAL CONNECTIONS TO THIS INSTRUMENT, ALWAYS GROUND THE INSTRUMENT FIRST BY CONNECTING THE POWER CORD TO A PROPERLY MATED POWER OUTLET.

2. *WARNING: TO PREVENT DAMAGE TO THE INSTRUMENT, ALWAYS CHECK THE LINE-VOLTAGE INDICATION AT THE INPUT POWER CONNECTOR BEFORE APPLYING PRIMARY POWER.*

This instrument can be operated from either a 120 volt or a 240 volt nominal line voltage source at 50-400 Hz. Refer to Section 2 for details.

3.3.2 OPERATING TEMPERATURE

The instrument can be operated where the ambient air temperature is between 0°C and $+50^{\circ}$C. The instrument can be stored in ambient temperature between -40° and $+70^{\circ}$C. After storage at a temperature beyond the operating limits, allow the chassis temperature to come within the operating limits before applying power.

3.3.3 PLUG-IN UNITS

The 1038-D14 mainframe is designed to accept up to three PACIFIC MEASUREMENTS plug-in modules. This plug-in feature allows a variety of measurements to be displayed, in addition to allowing for future expansion of the measurement system. Overall system capability is determined in large part by the plug-in complement selected. A minimum of two plug-ins are required for typical instrument operation.

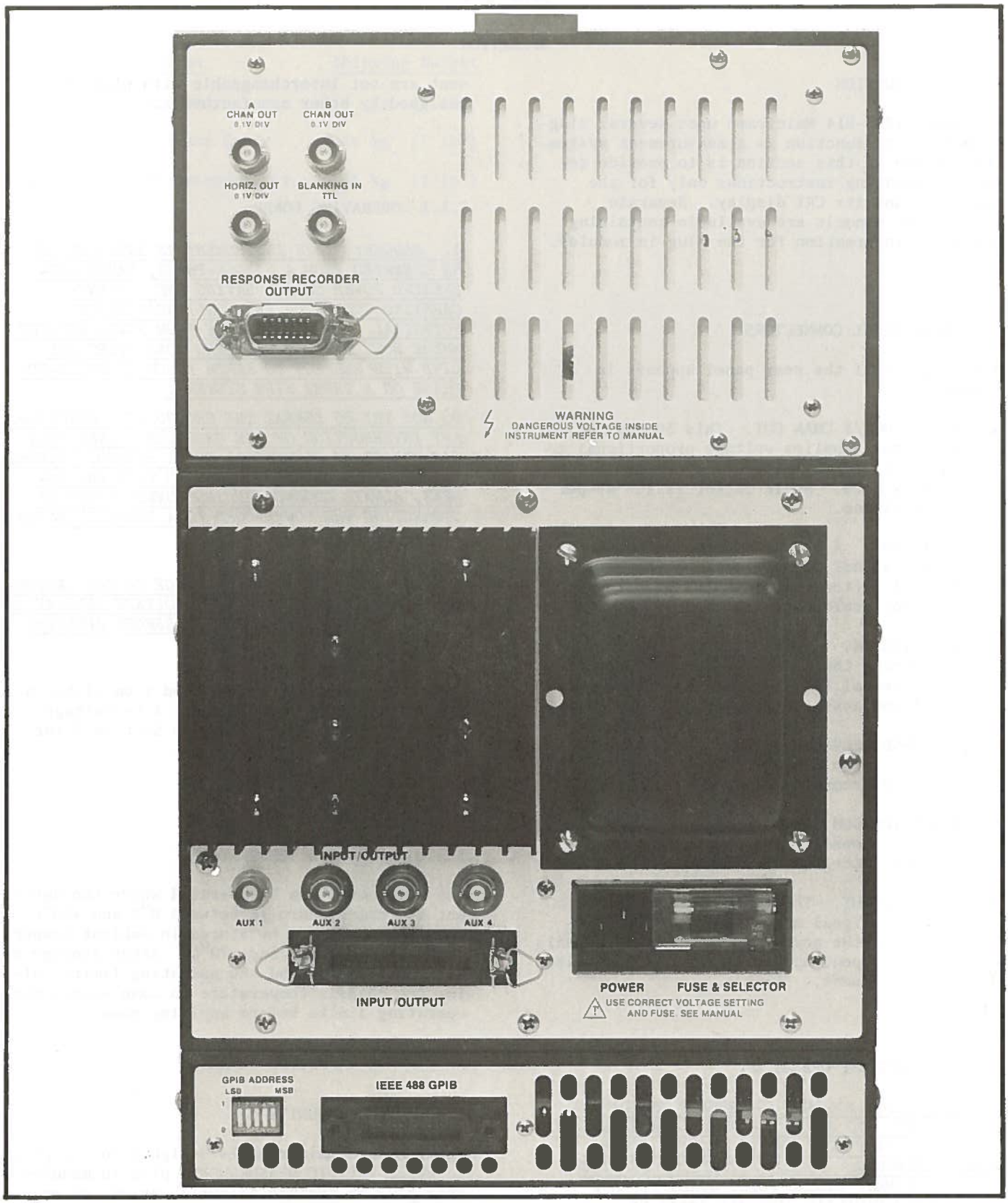

REAR PANEL CONNECTORS

FIGURE 3-1

3.3.3.1 INSTALLING THE PLUG-IN MODULES

WARNING: ALWAYS ENSURE THAT THE MAIN POWER SWITCH (PUSHBUTTON) IS TURNED OFF (INDICATOR NOT ILLUMINATED) BEFORE INSTALLING OR REMOVING MODULES.

Align the guides in the top and bottom of the plug-in with the corresponding slots in the mainframe housing. Pull latch at bottom straight out and push the plug-in unit firmly into its compartment until it locks in place. Secure module by pressing its latch (at the bottom) flush with the front panel.

To remove a plug-in, pull the latch at the bottom until the module is released, and slide the unit out of its compartment.

3.3.4 CRT CONTROLS

The more frequently adjusted controls are located on the upper right panel of the instrument, adjacent to the CRT face (see Figure 3-2). An abbreviated description is provided in Table 3-1. The IEEE bus indicators are described in Section 7. The remaining CRT controls, situated in the deflection and high voltage circuit areas, are only adjusted when the instrument is serviced (see Section 6).

3.3.4.1 PRE-OPERATIONAL CHECKOUT

Before using the Model 1038-D14 for the first time, it is desirable for the unfamiliar operator to follow this step-by-step procedure. Correct instrument operation can be verified and basic calibration made without internal adjustments. If appropriate plug-ins are available, proceed with Steps 1 through 10 below. Otherwise refer to paragraph 4.3 through 4.4.

NOTE

If recalibration of the display or mainframe appears necessary, qualified service personnel should refer to Section 6.

Step 1: Set the POWER switch to OFF and connect equipment to a power source that meets with requirements specified.

Step 2: Install a horizontal plug-in module, 1038-H(m), into the left compartment and a vertical plug-in module, 1038-V(m), into the A CHANNEL DISPLAY compartment.

Step 3: Connect a detector to the vertical plug-in module and turn the INTENSITY control fully counterclockwise. Turn POWER switch ON.

Step 4: Connect the detector (input end) to the CALIBRATOR OUTPUT jack on horizontal plug-in, and select ON at CALIBRATOR switch. Select INT position on HORIZONTAL slide switch and A CHAN on DISPLAY pushbutton. Allow the instrument to warm up for at least 10 minutes.

Step 5: On the vertical plug-in, set the OFFSET thumbwheels to 10.0 and POLARITY pushbutton to +(in). Select the INPUT/dBm and 10.0dB/D pushbuttons. Set the REF LINE control to center.

TABLE 3-1

FRONT PANEL CRT CONTROLS

INTENSITY control	Controls display brightness
FOCUS control	Provides a fine, non-blurred line display
MEMORY switches	Selects stored data (e.g., for slow sweep) when ON, or direct viewing when OFF Selects stopped action for photographing display in SAVE
FIND BEAM switch	Brings beam on-screen when not visible
POWER switch	Turns primary ac ON or OFF
TRACE ROTATE control (screwdriver adjust)	Aligns trace parallel with horizontal graticule

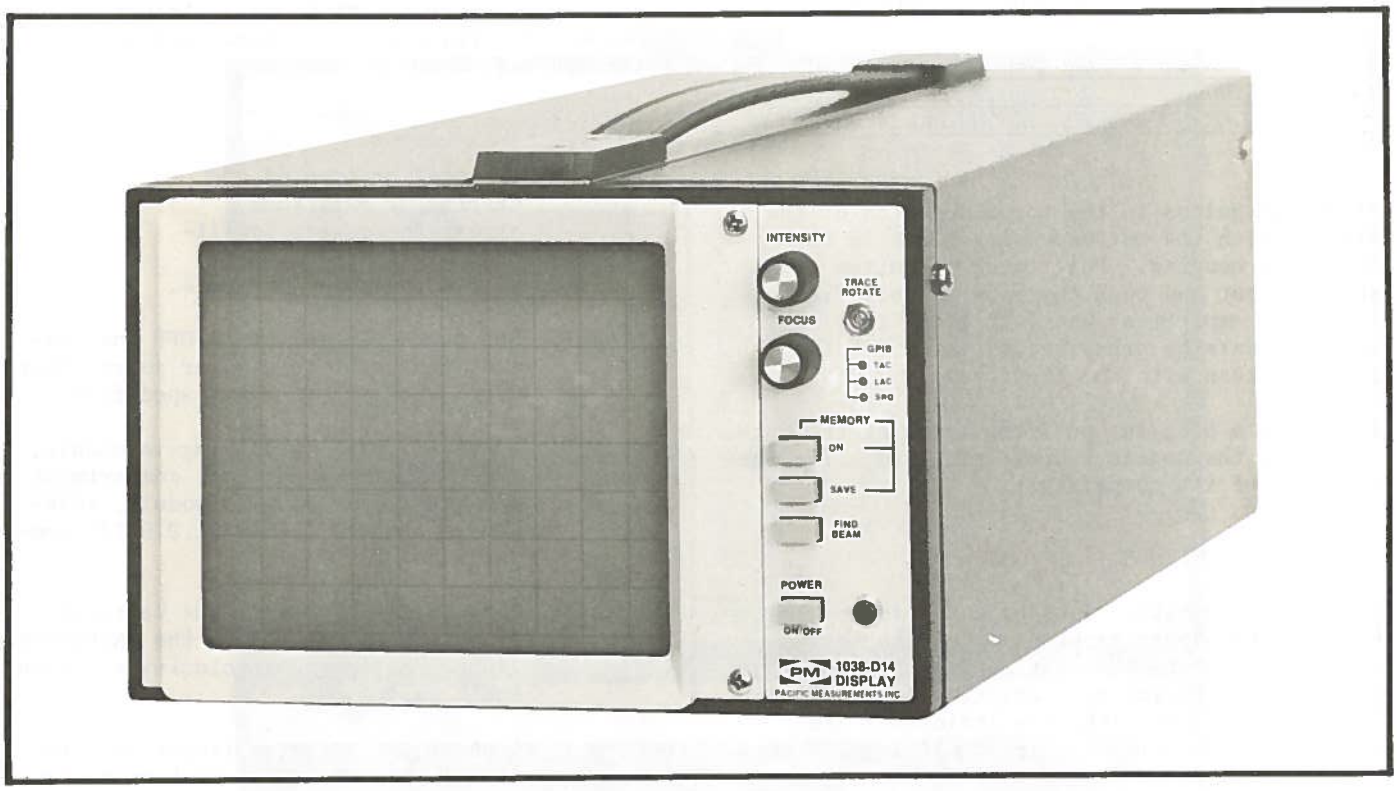

FRONT PANEL CONTROLS

FIGURE 3-2

Step 6: Advance the INTENSITY control until the trace is at the desired viewing level, and adjust the FOCUS control for a sharp, well-defined trace.

Step 7: Position the trace exactly on the center line graticule using the HIGH LEVEL (screwdriver) adjustment on vertical plug-in.

Step 8: If the trace is not parallel along the center horizontal CRT graticule, adjust TRACE ROTATE to align it with the center line.

Step 9: Select 00.0 at the vertical plug-in OFFSET switch and note that trace is displaced one major vertical division upwards on the CRT.

Step 10: Turn REF LINE control clockwise to +4 position to move the trace offscreen upwards. Push the FIND BEAM button and observe that the display compresses into the screen area. Reposition the trace with FIND BEAM released.

3.3.5 GENERAL OPERATING INFORMATION

3.3.5.1 INTENSITY CONTROL

WARNING: DAMAGE TO THE CRT PHOSPHOR CAN OCCUR UNDER ADVERSE CONDITIONS. AVOID DISPLAY OF EXTREMELY BRIGHT, SHARPLY FOCUSED SPOT.

Adjustment of this control is interactive with display focus. Hence, slight adjustment of the FOCUS control may be necessary when the intensity level is changed. To protect the CRT phosphor coating, do not turn the INTENSITY control higher than necessary to provide a satisfactory display.

Apparent trace intensity can be improved by reducing the ambient light level or using the viewing hood, part number 12777.

3.3.5.2 DISPLAY FOCUS

If a well-defined display cannot be obtained with the FOCUS control, even at low INTENSITY control settings, adjust the internal ASTIGMATISM control (refer to Section 6).

To check the setting of the astigmatism adjustment, slowly turn the FOCUS control through the optimum setting with a signal displayed on the CRT screen. If the astigmatism adjustment is correctly set, the vertical and horizontal por-

tions of the trace will come into sharpest focus at the same setting of the FOCUS control.

3.3.5.3 TRACE ALIGNMENT

If a free-running trace is not parallel with the horizontal graticule lines, the front panel TRACE ROTATE can be adjusted per Step 8 of paragraph 3.3.4.1.

3.3.5.4 BEAM FINDER

The FIND BEAM switch provides a means of locating a display that is outside the viewing area, vertically or horizontally. When FIND BEAM is depressed, the display is compressed within the graticule area of the screen, and the display intensity is increased. To locate and reposition an overscanned display:

Step 1: Press the FIND BEAM switch, hold it in, and adjust the vertical and horizontal position controls to approximately center the display about the X and Y axes centerlines.

Step 2: Release the FIND BEAM switch; the display should remain within the viewing area.

3.3.5.5 GRATICULE

The graticule or viewing screen division lines are marked on the inside of the CRT faceplate to provide accurate, parallax-free measurements. The graticule is divided into eight vertical and ten horizontal divisions, where each major division forms a 0.5 inch (1.27 cm) square. In addition, the major divisions are divided into 5 minor scale divisions. The vertical gain and horizontal timing of the plug-in units are calibrated to the graticule marks, allowing measurements to be displayed accurately.

When making time or frequency measurements from the graticule, the center eight divisions provide the most accurate portion of the scale. Position the start of the timing area to be measured to the second vertical division, and the end to any point before the ninth vertical division.

3.3.5.6 INTENSITY MODULATION

Intensity (Z-Axis) modulation can be used to relate a third element of electrical phenomena to the vertical (Y-Axis) and horizontal (X-Axis) coordinates, without affecting the waveshape of the displayed signal. The Z-Axis modulating signal, applied to the amplifier's summing junction, is derived either from memory or from external sources via the rear panel I/O connector.

In general, positive-going signals increase brightness and negative-going signals decrease brightness, with actual values of level determined by initial setting of intensity controls.

The BLANKING IN connector (rear panel) also accesses the Z-Axis amplifier via a logical OR gate chain which is controlled by a TTL level signal. Access from the plug-in retrace blanking signal is also available here, deriving from the horizontal plug-in when sweeping.

3.3.6 REFRESH MEMORY

The Model 1038-D14 incorporates a display memory circuit to enable storage of X and Y axis deflection signals digitally. When the front panel MEMORY pushbutton ON is depressed, the display is driven by deflection signals from the RAM circuit (after D/A conversion and processing). When the ON pushbutton is released, the CRT displays real-time deflection signals from the plug-ins.

When the SAVE pushbutton is depressed, the digital signals from the RAM memory are continuously converted to CRT deflection drive, with no update from the plug-ins occuring. The display can then be conveniently photographed using conventional CRT scope mounting camera equipment.

3.4 MEASUREMENT SYSTEM OPERATION

Consult the appropriate plug-in instruction manuals for more detailed information regarding the use of the 1038-D14 as a measurement instrument.

SECTION 4

PERFORMANCE CHECKS

4.1 PURPOSE

Information in this section is useful for periodic evaluation of performance of the Model 1038-D14 Mainframe. If the instrument fails to meet one or more of the performance criteria listed here, refer to Section 6 for detailed instructions on making the necessary adjustments.

This section may also be used for incoming inspection, in the event that a mainframe is received without plug-in units. (Refer to paragraph 3.3.4.1 for parallel procedures to be used for incoming inspection when plug-ins and detectors are available.)

4.2 EQUIPMENT REQUIRED

The only item of equipment required to make these performance checks is the special plug-in extender and calibration fixture kit, PACIFIC MEASUREMENTS part number 12715. The kit consists of a shorting board, Assembly No. 12719, and an extender, Assembly No. 12716.

4.3 DISPLAY SYSTEM CHECKS

Step 1: With POWER switch OFF, install the shorting board into the left-most plug-in compartment (horizontal slot) and the extender into the middle plug-in compartment (A channel slot).

Step 2: Select the following switch positions:

SHORTING BOARD:

A CHANNEL ON

EXTENDER:

CAL

VERT

CENTER

Step 3: Connect the instrument to an ac power source that meets with selected ratings on input connector, apply power and allow equipment to warm up for 10 minutes.

Step 4: Turn the INTENSITY control fully counterclockwise, noting that the spot on CRT face (if visible) extinguishes.

Step 5: Turn the INTENSITY control clockwise and note that the spot can be made to de-focus or "bloom". Reduce the intensity until a dim spot is displayed.

Step 6: Adjust the focus control, noting that a sharp, well-defined spot can be obtained. Re-adjust the INTENSITY and focus controls as needed, to suit preferred viewing level.

Step 7: On the extender board, change the selector switch from CENTER to +3DIV. Press the FIND BEAM button. The spot should brighten noticeably and move slightly downward. Release FIND BEAM switch.

4.4 DEFLECTION SYSTEM CHECKS

Step 1: On the extender board, change the selector switch from +3DIV to CENTER. The beam should be in the center of the CRT, within 0.1 of a major division.

Step 2: Change the selector switch from CENTER to +3DIV. The spot should move three divisions ±0.03 divisions upward.

Step 3: Turn POWER switch OFF and exchange the locations of the shorting board and the extender board. Change the selector switch on the extender from VERT to HORIZ. Turn POWER switch ON. Check to see that the spot is now three divisions ±0.03 divisions to the right of center.

This completes the performance checks for Model 1038-D14.

SECTION 5

CIRCUIT DESCRIPTION

5.1 INTRODUCTION

This section of the manual contains a functional description of the electrical circuits contained in the plug-in chassis and CRT display chassis portions of the Model 1038-D14 Mainframe. Table 5-1 lists the circuit assemblies by reference designation, and includes the schematic and assembly cross-reference for convenience. Assembly A10 is optional, and is covered separately in Section 7.

5.2 BLOCK DIAGRAM DESCRIPTION (Figure 5-1)

The Interface Board (A1) accepts signals from the left and right vertical plug-in units for display on the CRT and/or storage in the memory. Signals from the horizontal plug-in unit are processed to supply the deflection circuitry for the display.

The Interconnect Board (A2) couples the low voltage power supply outputs to the system via the Interface. It also furnishes certain signals to the Input/Output and other connectors on the rear panel of the instrument.

The Power Supply Assembly (A3) provides three voltage levels to the system:

+ 15 volts dc

+ 5 volts dc

- 15 volts dc

The Deflection Circuit (A4) interconnects horizontal and vertical axis information to and from the Memory Board (A6). It receives and processes signals from the horizontal and vertical plug-in units, before application to the display. An output to an accessory Response Recorder is provided.

Numerous display circuit functions are routed through A4, including Geometry, Astigmatism, and certain front panel controlled operations, such as intensity and trace rotation. Regulation for the High Voltage Power Supply (A5) is also provided, along with focus control and CRT blanking.

The High Voltage Power Supply (A5) converts dc low voltage to the several high potentials (1.55kVdc maximum) utilized by the CRT in the display portion of the system.

The Memory Board (A6) receives analog horizontal and vertical (A and B) signals, converts

TABLE 5-1

MODEL 1038-D14 CIRCUIT ASSEMBLIES

REF. DESIG.	NOMENCLATURE	ASS'Y. NO.	SCHEMATIC DRAWING NO.
A1	Interface Ckt	14101	14102
A2	Interconnect	14218	14619
A3	Power Supply	14126	14127
A4	Deflection Ckt	14087	14088
A5	High Voltage Supply	14095	14096
A6	Memory Board	14214	14215
A7	Front Panel	14413	14619
A8	IEEE Interconnect	14584	14619
A9	IEEE Indicator	14493	14619
(A10)	IEEE Bus Interface	See Section 7	

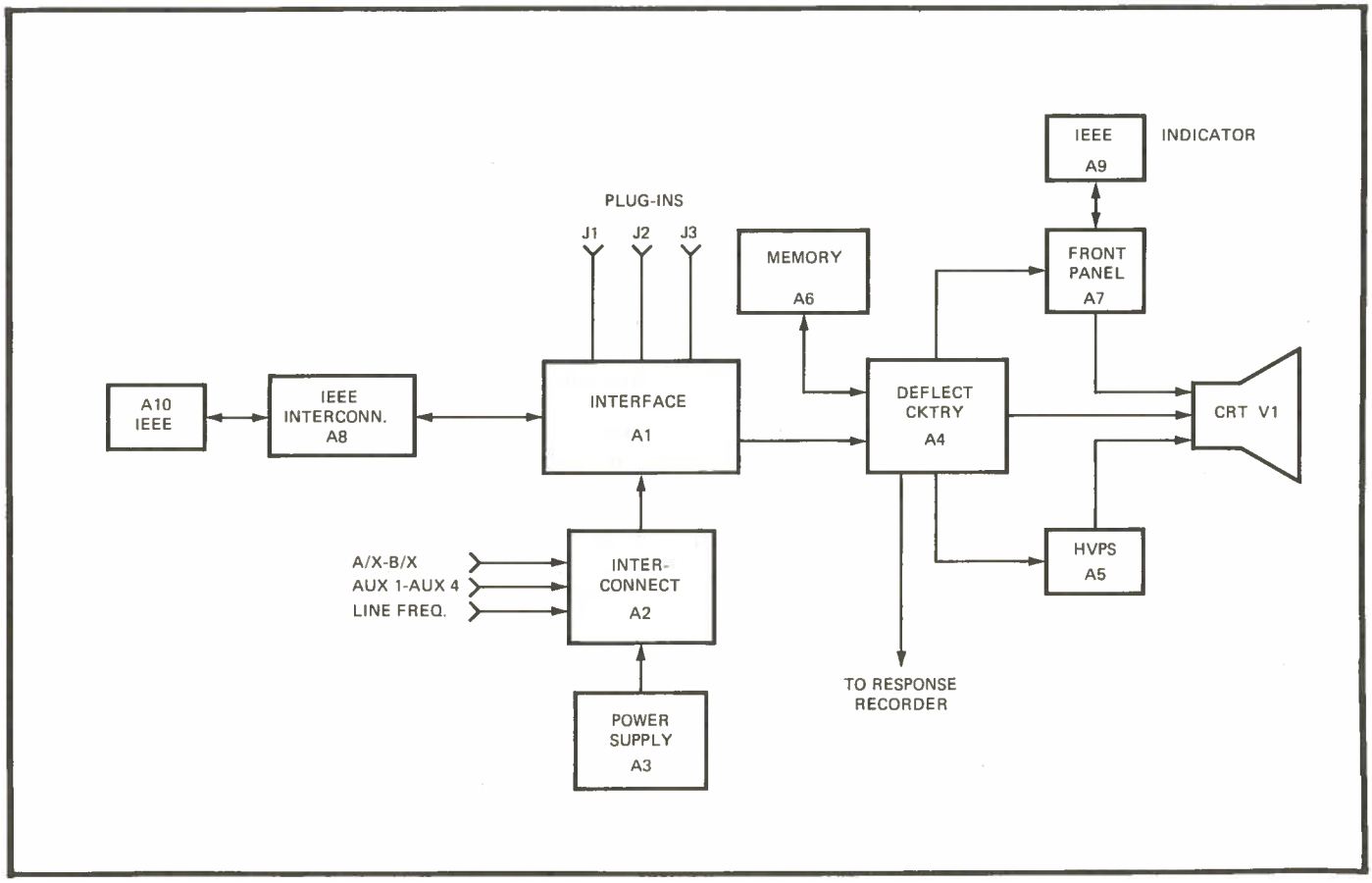

FUNCTIONAL BLOCK DIAGRAM

FIGURE 5-1

them to digital, and stores them for further use by the display. Vertical signals are quantized to 256 points and horizontal to 512, to assure faithful signal reproduction.

The CRT provides a single beam, 4 inch by 5 inch display featuring internal (8x10 division) graticule and P31 phosphor.

5.3 INTERFACE CIRCUIT PCB

This circuit provides the interconnection from the plug-ins to the rest of the mainframe. There are three primary inputs (one horizontal and two vertical plug-ins) and one primary output, which connects to the deflection circuitry in A4.

The main signals coupled to A4 include:

- differential A and B channel;
- differential horizontal channel;
- display logic to select A or B;
- retrace blanking from plug-in;
- intensity or Z axis control.

Amplifier stages A1U1A and A1U1B drive the ratio input connections to the vertical plug-ins and to the (optional) IEEE interconnect. In addition to output A and B, the following secondary outputs also feed the IEEE interconnect.

- data bus 0 through 3;
- input ratio A and B;
- differential horizontal channel;
- data bus 4 and 5.

5.4 INTERCONNECT

This circuit serves primarily to connect power

supply potentials throughout the mainframe system, including the plug-ins. Connections are also made to the input/output connector, including auxiliary signal paths to or from the plug-ins. Full-wave bridge rectifier CR1 is furnished alternating current from the 15.6 volt center-tapped secondary winding of T1, to provide the power supply with unregulated (but filtered) voltage for the ±15V power supply.

5.5 POWER SUPPLY

Unregulated voltage enters A3 Power Supply at the emitters of A3Q4 and A3Q7, the series pass regulators for the +15V and -15V supply respectively. Transistors A3Q5 and A3Q6 drive the pass regulators, with the voltage furnished by A3U2A and A3U2C. Sensing voltage is applied to the +15V amplifier via (voltage divider) A3R24, adjustment A3R23, and A3R22, while the path for the -15V is via (voltage divider) A3R36, adjustment A3R37 and A3R38. Zener diode A3CR10 provides a 6.2V reference input to the -15V offset amplifier (A3U2C), while the +15V circuit (A3U2A) utilizes the -15V as a reference. Current limiting is provided at approximately 3 amperes by A3U2B and A3U2D.

The +5V circuit receives unregulated voltage from the 6.8V rms winding of T1 and full-wave bridge rectifier CR1 (reference schematic drawing 14619). Series pass regulator A3Q3 is driven by A3Q2, with the control voltage furnished by A3U1B. The sensing input is applied to the amplifier via (voltage divider) A3R12 and adjustment A3R13, and is zener referenced by A3CR2 at 4.3V. A low-value (0.05 ohms) series resistor consisting of A3R3 and A3R15 in parallel develops a voltage proportional to the load current, which causes A3U1A and A3Q1 to shut down the drive amplifier A3U1B if output current exceeds 7 amperes. Additionally, the 5V supply is protected with a 10A rated fuse.

5.6 DEFLECTION CIRCUIT

Figure 5-2 provides a simplified block diagram illustration of the portions of schematic drawing 14088 that relate to electron beam steering in the CRT.

5.6.1 VERTICAL CHANNEL

Vertical input signals from A channel and B channel are processed in nearly identical fashion. Differential A channel input is applied at A4J3 pins 8 and 9 (- and +) to A4U9B pins 6 and 5 and A4U9A pins 2 and 3. The single-ended output at A4U9B pin 7 furnishes A channel signal to the memory (via A4J2 pin 7) and to CMOS switch A4U2 at pin 3. The other single-ended output at A4U9A pin 1 furnishes A channel signal to the response recorder output at A4J5 pin 5, as well as a BNC connector on the rear panel.

The single-ended B channel signal from A4U9D enters CMOS switch A4U2 at pin 6, and the third switch input at pin 11 is the Y MEMORY signal at A4J2 pin 9. The outputs of all three switch segments are tied in common and feed deflection driver A4U14A (see paragraph 5.6.3). Selection of A channel or B channel is determined by NOR gates A4U4B and A4U4A respectively. The Q and $\overline{Q}$ outputs at A4U13 enable the selected NOR section, unless the (front panel) $\overline{\text{MEMORY ON}}$ function is actuated. In that event the high level from inverter A4U7E provides a negated output from both NOR gates and enables pin 9 of A4U2 to close the Y MEMORY switch segment. When the $\overline{\text{MEMORY ON}}$ switch is open, +5V through A4R53 is inverted in A4U7E, disabling Y MEMORY path and putting a low on the inputs to each NOR gate.

Operation of the A/B selector flip-flop A4U13 is via the clock input from inverter A4U7D (which is driven by A4U6B/A4U6D), or from the set and clear inputs. Input to A4U6B via inverter A4U7B is the NOR output of A4U5B, which has 3 active inputs:

$\overline{\text{DISPLAY A}}$

$\overline{\text{DISPLAY B}}$

MEMORY ON (or +5V via A4R53 inverted by A4U7E)

When any input is high, A4U5B output is low. If the High input is $\overline{\text{DISPLAY A}}$ or $\overline{\text{DISPLAY B}}$, a low logic level at A4U6A or A4U6C actuates the clear or preset input at A4U13 (after inversion by A4U7A or A4U7C).

5.6.2 HORIZONTAL SWEEP CHANNEL

Horizontal data is processed nearly identically to the A or B vertical channel signals. The single-ended output at A4U10B pin 7 furnishes H channel signal to the memory via A4J2 pin 10 and to CMOS switch A4U3 at pin 3. The other single-ended output at A4U10A pin 1 furnishes H channel signal to the response recorder output at A4J5 pin 9, as well as a BNC Connector on the rear panel.

The other three inputs to the multiplexer switch A4U3 are:

- Z DIRECT at pin 6
- X MEMORY at pin 11
- Z MEMORY at pin 14

The H and X MEMORY switch segments have their outputs tied in common. The Z DIRECT and Z MEMORY switch segments also have their outputs tied in common. The switch-enable lines are connected as follows:

Z DIRECT and H Channel -- enabled by false $\overline{\text{MEMORY ON}}$ function

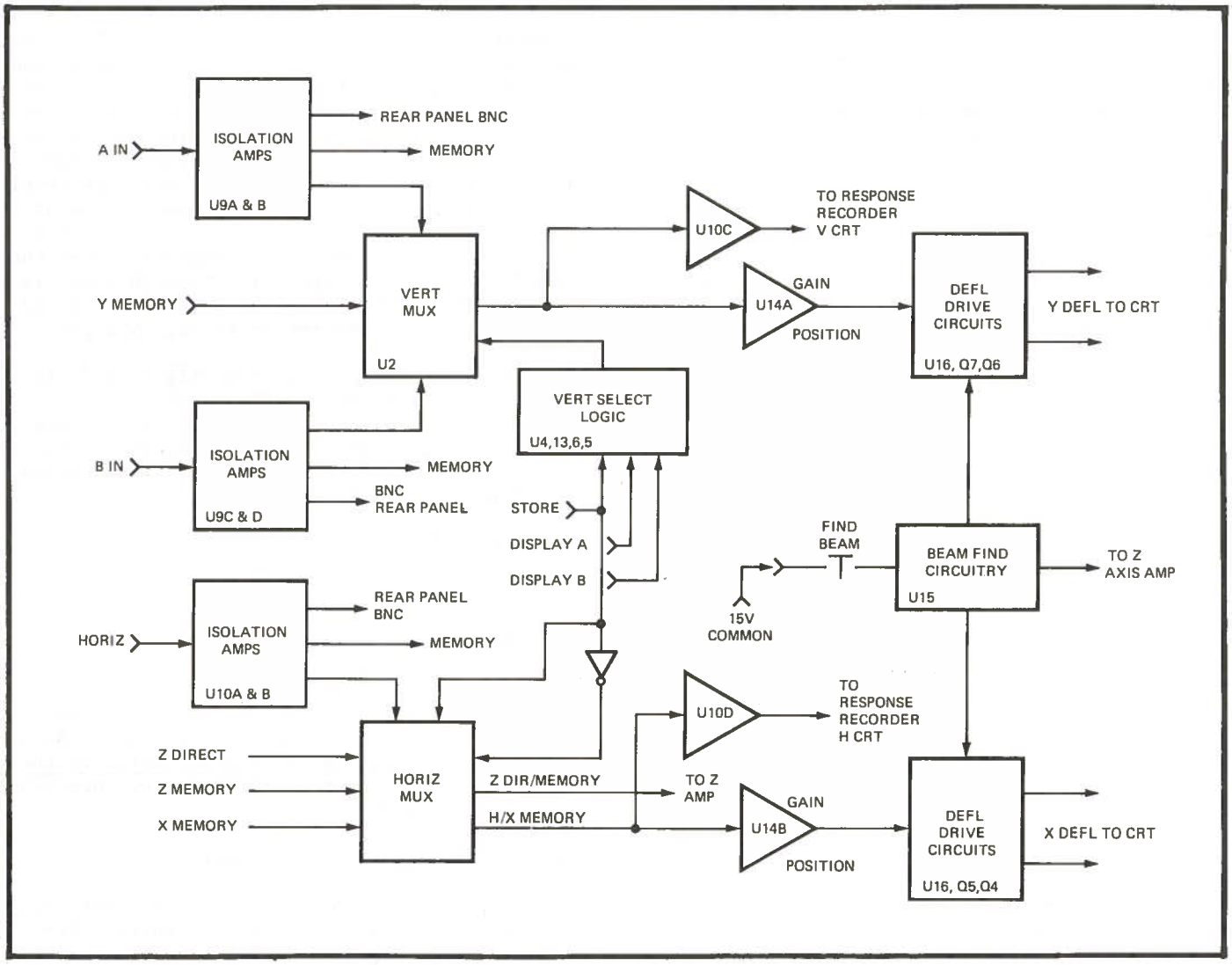

X-Y DEFLECTION

FIGURE 5-2

X MEMORY and Z MEMORY -- enabled by true MEMORY ON function

Thus either an H channel input or the X MEMORY signal is applied to the deflection circuitry for X axis and a Z DIRECT input or the Z MEMORY signal is applied to the Z axis amplifier, depending upon the state of MEMORY ON.

In summary, the multiplexing action of A4U2 and A4U3 provides for selection of either direct or memory-stored signals to be applied to the CRT on the X, Y, and Z axes. Selecting MEMORY ON (front panel) sends the (A or B) Y MEMORY signal to the vertical deflection circuitry and the X MEMORY signal to the horizontal deflection circuitry. The selected X and Y axis signal is also furnished (as VCRT and HCRT) to the response recorder, via A4U10C and A4U10D to A4J5 pins 11 and 12.

5.6.3 DEFLECTION DRIVE

DANGER: DEFLECTION DRIVE CIRCUITRY OPERATES AT POTENTIALS UP TO 250 VOLTS DC. EXTREME CAUTION SHOULD BE USED WHEN PROBING CIRCUIT POINTS ADJACENT TO A4U15, A4U16, A4Q3, A4Q4, A4Q5, A4Q6, AND A4Q7. CHECK FOR HIGH VOLTAGE AT TP420, THE OUTPUT OF RECTIFIER BRIDGE A4CR1.

The selected signal is amplified in A4U14A and A4U14B, with gain control furnished by A4R77 and A4R88 respectively. The non-inverting input to each stage can be dc-level set by A4R85 and A4R96, for VERT POSITION and HORIZ POSITION adjustment. Processed deflection signals are push-pull amplified by A4U16A and A4U16B to produce the differential drive for final stage amplifiers A4Q7/A4Q6 (vertical or Y deflection) and A4Q5/A4Q4 (horizontal or X deflection).

Scale factors for Y and X deflection are 15V/div and 30V/div respectively. Differential deflection drive provides for beam positioning up or down and left or right of a mid-point position on the CRT face. Resistors A4R77 and A4R88 (at A4U14A pin 3 and A4U14B pin 5 respectively) set the scale factors.

Maximum deflection signal is reduced when FIND BEAM (front panel switch A7S1-3A) is depressed. Transistor stage A4U15D provides this signal, when A7S1-3A grounds to provide base drive at A4U15D pin 12. Negative voltage at the collector (pin 14) produces conduction in A4CR6, causing base drive at A4U15A and A4U15C to be reduced, and their collector currents to drop until the pushbutton is released. These stages normally furnish constant current drive to A4U16B, and are regulated by A4U15B. The negative A4U15D collector voltage also drives the Z axis amplifier through A4R52 to increase intensity when FIND BEAM is active.

5.7 HIGH VOLTAGE SUPPLY

The remaining portions of schematic drawing 14088 are described in this section, since they control the circuitry shown on schematic drawing 14096, High Voltage Supply. The H.V. supply circuits produce the high-voltage potentials and provide the control circuits necessary for operation of the CRT. The Z-Axis Amplifier, which sets the intensity of the CRT display is also included. Figure 5-3 provides a simplified block diagram of the high voltage CRT circuitry.

5.7.1 HIGH VOLTAGE CIRCUITRY

Refer to Figure 5-4 for a simplified illustration of this circuitry, which is found on drawing 14088 and drawing 14096, High Voltage Supply.

The oscillator circuit consists of A5Q1, A5T1 and associated circuitry. The primary of A5T1 (pins 1 and 2) is tuned to approximately 30KHz with A5C1. The (positive) feedback winding is 2 turns (pins 3 and 4) coupled to the base of A5Q1 by A5C2. The base drive current for A5Q1 is obtained from A4Q1 on the deflection PC board (14087). The feedback for the H.V. regulation is through A5R12 to the summing junction of the control amplifier A4U1 pin 2. Reference current is obtained from +15V through A4R114. A4R116 provides a voltage proportional to oscillator dc current. At approximately 360mA level, A4U1A becomes active and takes control of the oscillator drive which limits the current and prevents damage to the oscillator.

5.7.2 Z-AXIS AMPLIFIER

Refer to Figure 5-5 for a simplified illustration of this circuitry, which is found on drawing 14088, Deflection Circuit. Unity gain stage A4U8A furnishes current drive at pin 7 to the input of shunt-feedback operational amplifier A4U8B/Q3. The feedback path is from A4U8B pin 1 through A4Q3 collector to the input at pin 2 of A4U8B. The linear output voltage provides the drive signal to control the CRT intensity level through the control grid circuit in A5, High Voltage Supply.

The output level of the Z-Axis Amplifier is established by the voltage drop across A4R119 in reference to virtual ground at A4U8B pin 2, which is the summing point of the op amp. The current through A4R119 is determined by the input current from any combination of several sources:

- front panel INTENSITY input at A4J8 pin 4;
- blanking from A4U4D pin 1, which can originate with:
  - plug-in blanking at A4J3 pin 4;
  - external BLANKING IN from rear panel BNC at A4J5 pin 1;
  - MEM BLANKING at A4J2 pin 13;
  - Z MEMORY (applied to A4U8A via A4R42) when $\overline{\text{MEMORY ON}}$ is active;

  FIND BEAM signal (applied to A4U8B via A4R52).

Resistors A4R48 and A4R50 are adjustable, to set the range of the front panel INTENSITY control.

5.7.3 HIGH VOLTAGE OUTPUTS

Transformer A5T1 has two secondary high voltage output windings which provide the potentials required by the CRT for the cathode, control grid, and anode. The -1500 volt accelerating potential for the cathode is supplied by half-wave rectifier A5CR3. The cathode heater is elevated to the cathode potential through A5R10. Half-wave rectifier A5CR2 provides the +1500V potential for the anode.

Half-wave rectifier A5CR1 provides about -1550 volts to establish bias voltage on the CRT control grid. This voltage, as well as CRT beam current, is controlled by the Z-Axis Amplifier

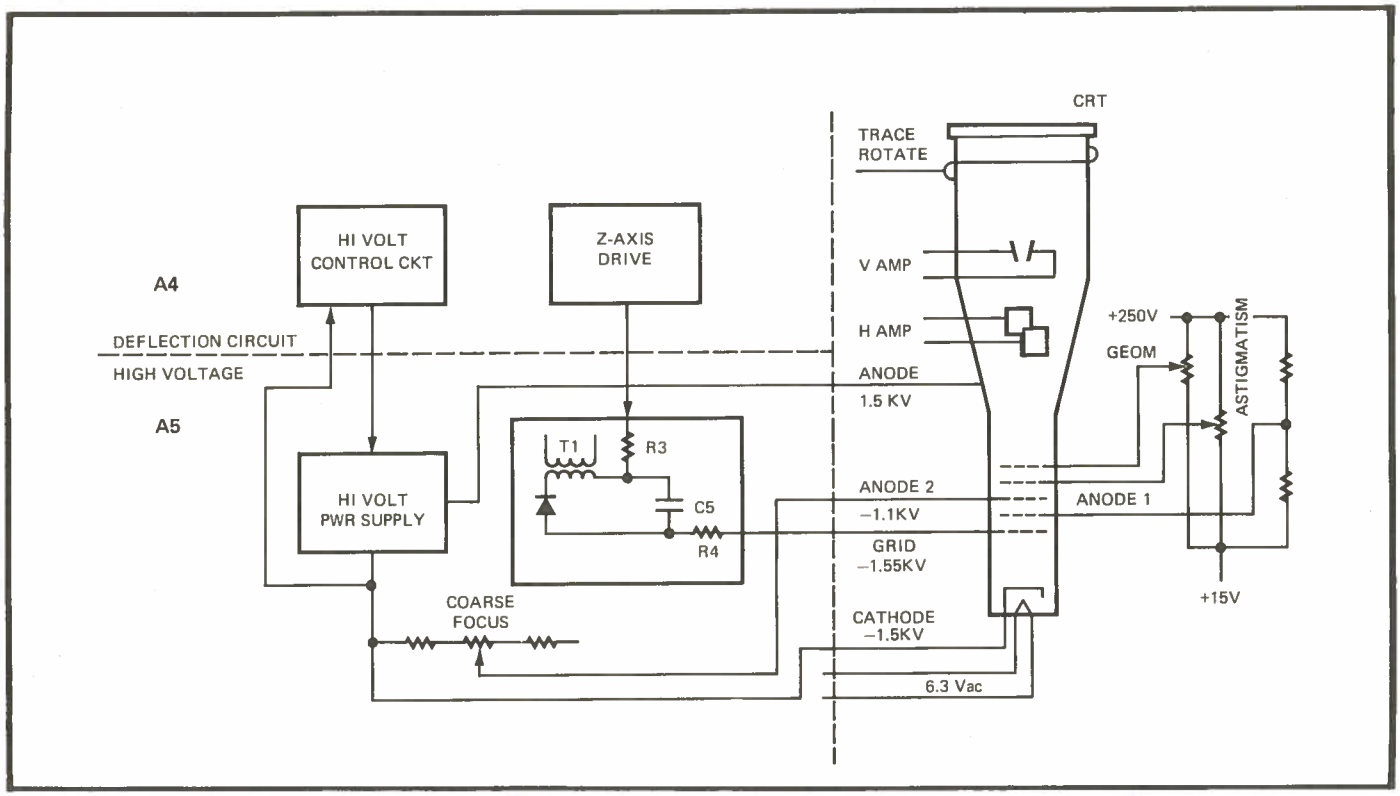

HIGH VOLTAGE CRT CIRCUITRY

FIGURE 5-3

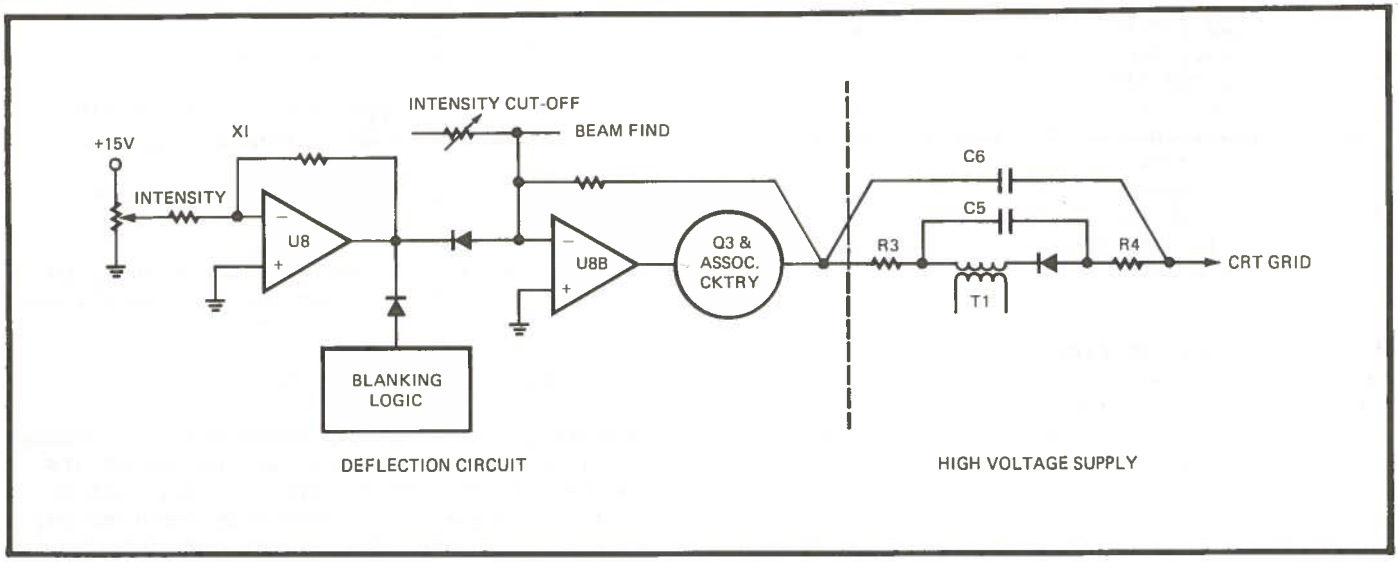

Z-AXIS AMPLIFIER

FIGURE 5-4

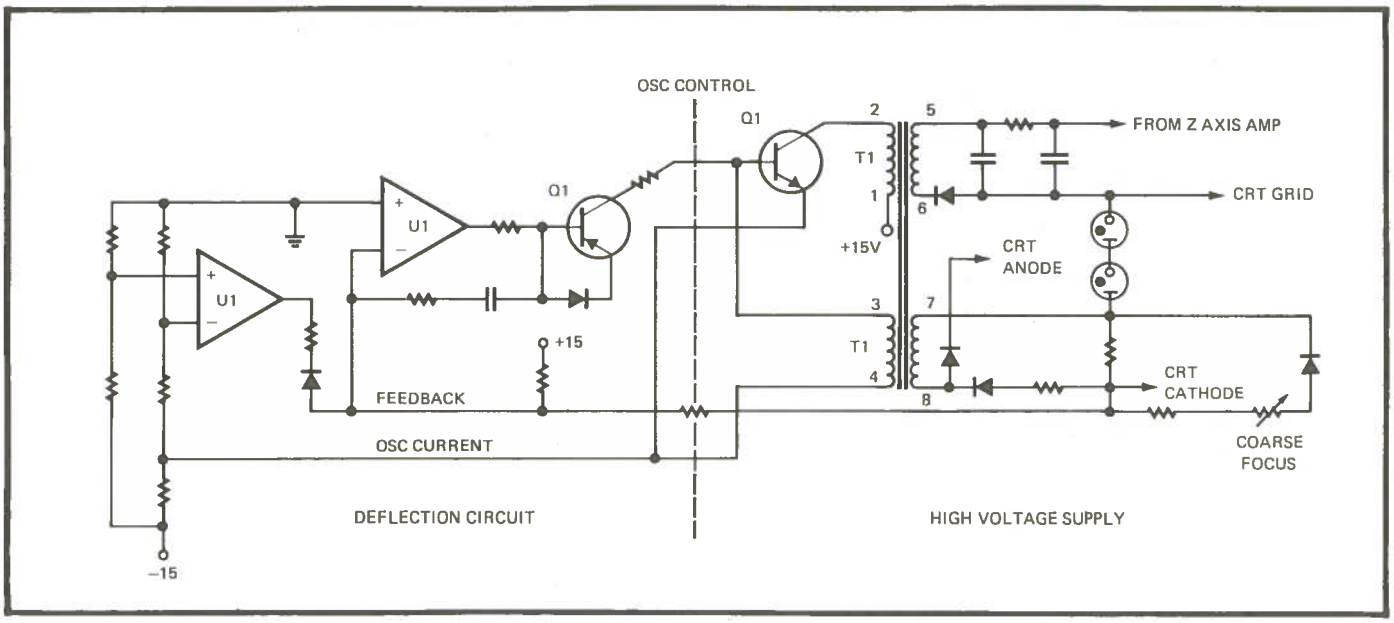

HIGH VOLTAGE CIRCUITRY

FIGURE 5-5

which includes INTENSITY control, blanking inputs, and intensification or FIND BEAM. The INTENSITY LIMIT (A4R48) and INTENSITY CUTOFF LEVEL (A4R50) on the deflection circuit board, provide a fine adjustment of the quiescent grid voltage, to bias the CRT just below cutoff with INTENSITY control set counterclockwise and no FIND BEAM or blanking inputs. Neon bulbs A5DS1 and A5DS2 provide protection to the CRT if the voltage difference between the control grid and the cathode exceeds about 120 volts.

5.7.4 CRT CONTROL CIRCUITS

In addition to the INTENSITY control discussed above, there is provision for arriving at optimum display using FOCUS (front panel) and astigmatism controls. Control A7R3 adjusts focus by providing the correct voltage for the second anode, while A4R145 astigmatism (drawing 14088) adjusts spot size/shape by providing correct voltage to the third anode. Interaction between the two controls requires adjustment of both for optimum spot shape. A4R148, Geometry, varies the positive level on the geometry electrode of the CRT. The (front panel) TRACE ROTATE control, A7R2, adjusts beam rotation coil L1 (current) to align the display (parallel) with the X-axis graticule.

5.8 MEMORY BOARD

The 1038-D14 incorporates a refresh memory to provide a clear, flicker-free display even at slow sweep speeds. The memory solves the problem of horizontal sweep start and sweep width control, under conditions of varying input sweep signal. Two traces are stored in digital memory, providing 512 discrete horizontal locations with 256 vertical steps per trace. Both vertical channels can be displayed, with the B channel appearing as a dashed line. The digitally refreshed, filtered memory presentation provides connected, smoothed data points in each sweep. Thus even such slow swept measurements as filter response are provided a bright, flicker-free display. A SAVE feature permits stopped action scope photography of stored data. New data updates the display completely during each sweep. A continuous display is generated, even while new data is being written into memory.

5.8.1 BLOCK DIAGRAM DISCUSSION

Refer to Figure 5-6 for a simplified illustration of the memory board, which is found schematically on drawing number 14215. The memory control system has been designed to provide a higher priority to a read function than to a write function. A new read cycle, with typical duration of 1 microsecond, is initiated every 16 microseconds. Write cycles occur after completion of read cycles, but do not necessarily recur at a fixed rate.

Horizontal signal is digitized in a ramp follower A/D, with synchronization provided by the retrace detector. The horizontal 10-bit parallel data stream is buffered onto the RAM address bus by tri-state buffers A6U8 and A6U3 during write operations. A clock circuit drives a read address counter to furnish data to the RAM address bus during a read cycle.

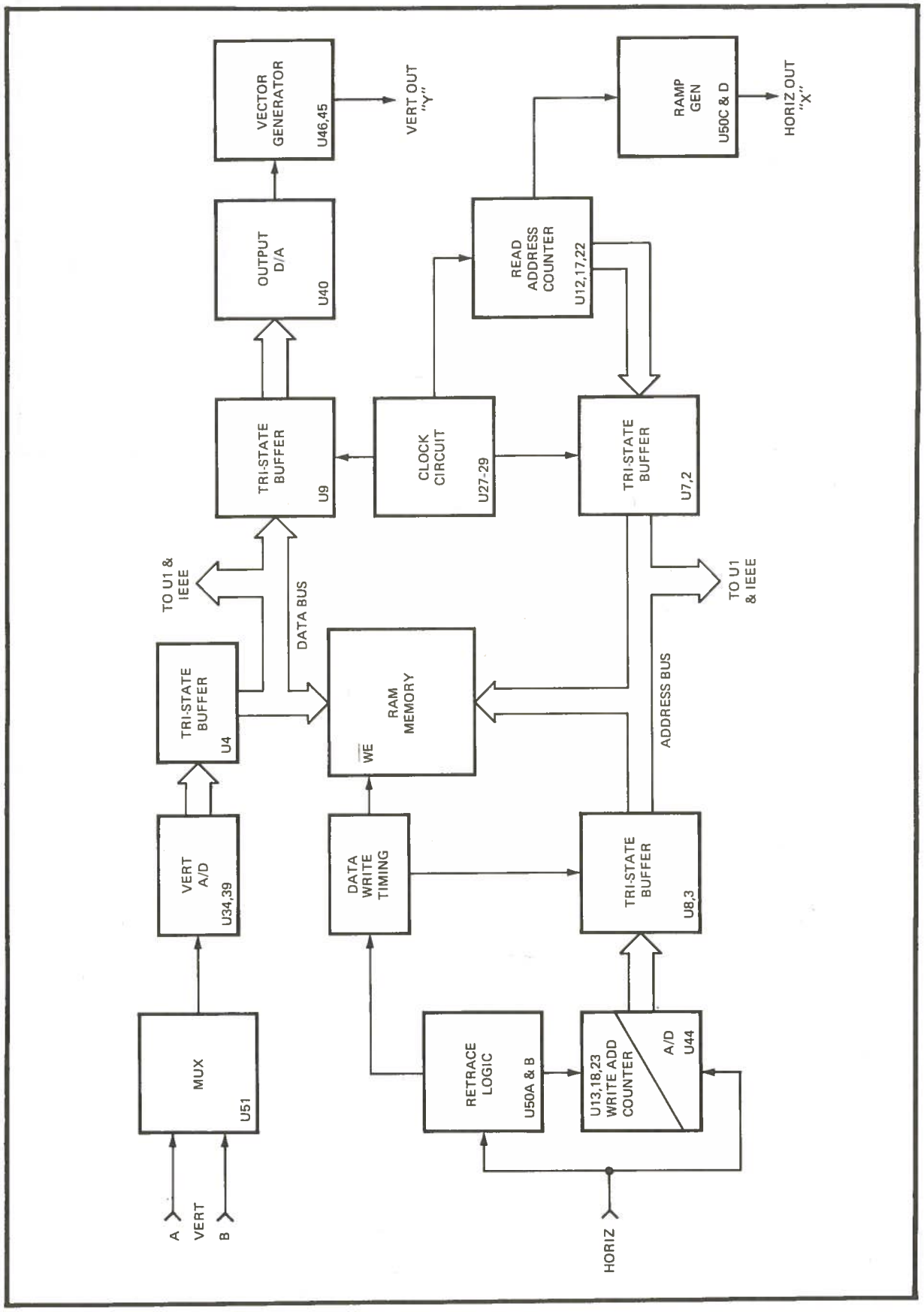

REFRESH MEMORY

FIGURE 5-6

Every 512 counts the horizontal output ramp generator A6U50 is reset, resulting in an 8 millisecond ramp locked to the read address.

Multiplexed A or B channel signal is digitized in the vertical A/D converter. The vertical eight-bit parallel data stream is buffered onto the RAM data bus by tri-state buffers. The vertical output circuit utilizes a D/A converter, followed by a vector generator and low pass filter to connect the discrete data points and smooth them out.

5.8.2 HORIZONTAL SIGNAL PROCESS

Refer to schematic drawing 14215 sheet 1 of 2 for this discussion. Conversion of the analog horizontal signal to digital data creates an address for the memory storage of the vertical signals. Input signal at A6J3 pin 10 feeds A6U44 via A6R11 and differentiator A6U50 via RC network A6R25 and A6C11. This circuit is non-linear (i.e., logarithmic) to accommodate sweep rates ranging from very slow to very fast (10 milliseconds to 100 seconds). The output is proportional to the negative of the instantaneous slope of the horizontal input.

Comparator A6U49 determines the sign of the sweep slope, and receives increased noise immunity at higher sweep rates (or band switch points) by the action of A6U50 pin 14. This state of A6U50 stores the positive differentiator output in A6C19 and adjusts the comparison level of A6U49. The function of NAND gate A6U14 is to provide a Schmitt trigger output and invert it before application to one-shot A6U41A (and other circuit points).

The negative true $\overline{\text{RETRACE}}$ clears the write address counter to zero and presets flip-flop A6U37 high at pin 9. It also enables the 0.5 MHz clock at A6U33 pin 11, starting the count sequence in the write address counter.

The D/A converter circuit A6U44 is a 10-bit digital-to-analog circuit and voltage reference combined on a single monolithic chip. Together with the write address counter and comparator stage A6U42, a high-speed, ramp follower A/D converter is formed. Output at pins 2 and 15 of A6U44 are clamped to $\pm$0.6V by A6CR1 and A6CR2. The least significant bit input (pin 4) is left unconnected, as the 512 count output is the maximum required.

5.8.2.1 DATA WRITE TIMING

Refer to sheet 1 of schematic drawing 14215, where circuitry associated with TP610 (INCREMENT WRITE ADDRESS COUNTER) processes the start conversion timing pulses. Figure 5-7 illustrates this portion of circuitry in simplified form. When the write address counter reaches a value (converted to voltage by A6U44) greater than the horizontal ramp input level, comparator A6U42 sends a low signal to flip-flop A6U37 pin 12. This low D input is transferred to the Q output at pin 9 on the next positive transition of the 1 MHz clock at pin 14. One-shot A6U35A produces a 1.5 microsecond pulse called START CONVERSION. The conversion in view is the vertical channel (A or B) at A6U34 pin 10. A signal called $\overline{\text{CONVERSION COMPLETE}}$ returns to one-shot A6U35, and increments the write address counter.

The former high level at A6U37 pin 9 occurred at preset, when the $\overline{\text{RETRACE}}$ from A6U14 pin 8 was true. At this time the write address counter (A6U13, A6U18, and A6U23) was cleared to zero via A6U20 pin 10, and the low $\overline{\text{Q}}$ output at A6U37 pin 6 cleared high, enabling the 0.5 MHz clock at A6U33 pin 13, via pin 12.

At the point in this cycle when $\overline{\text{RETRACE}}$ is true, A6U38 pin 5 enters the $\overline{\text{FILL}}$ mode (by the clear pulse derived from A6U37 pin 5) and the positive-going transition at A6U33 pin 8 initiates a WRITE MEMORY command, which requires 1 microsecond to complete. But as the horizontal sweep signal increases with time, A6U44 (D/A) programmed count is exceeded, and A6U42 pin 7 (hence A6U37 pin 9) goes high, generating a 1.5 microsecond START CONVERSION pulse in one-shot A6U35. This increments the write address counter and initiates a memory write enable ($\overline{\text{WE}}$) of vertical data.

The purpose of the $\overline{\text{FILL}}$ mode is to allow a high-speed (0.5 MHz) conversion cycle to occur, allowing the circuitry to "catch up" during the relatively short retrace period.

The START CONVERSION pulse also clocks tri-state buffer A6U4 at pin 11, connecting digital vertical signal to the memory data bus. The complement at A6U35 pin 12 ($\overline{\text{START CONVERSION}}$) starts a new (A channel vertical) A/D-D/A conversion cycle at A6U34 pin 10. A channel conversion is terminated and A6U35 retriggered for B conversion, by sending a true $\overline{\text{CONVERSION COMPLETE}}$ back to one-shot A6U35.

Thus, the write address counter cycles to the RAM address where the vertical data is stored. This process occurs until another $\overline{\text{RETRACE}}$ clears the counters to zero. Every other address contains either A or B vertical data, due to the multiplexing action on the A/D input.

It is instructive to note that one-shot A6U35A actually is double pulsed, by the action of A6U37 pin 9 on a positive edge and the action of $\overline{\text{CONVERSION COMPLETE}}$ on a negative edge. The first pulse serves to increment the lease significant bit of the write address counter. A6U35 is inhibited until the next up-count from A6U37 pin 9, at which time the next significant bit is incremented, and so on. The actual horizontal conversion period is dependent upon the input signal horizontal signal, which can range from 10 milliseconds to 100 seconds.

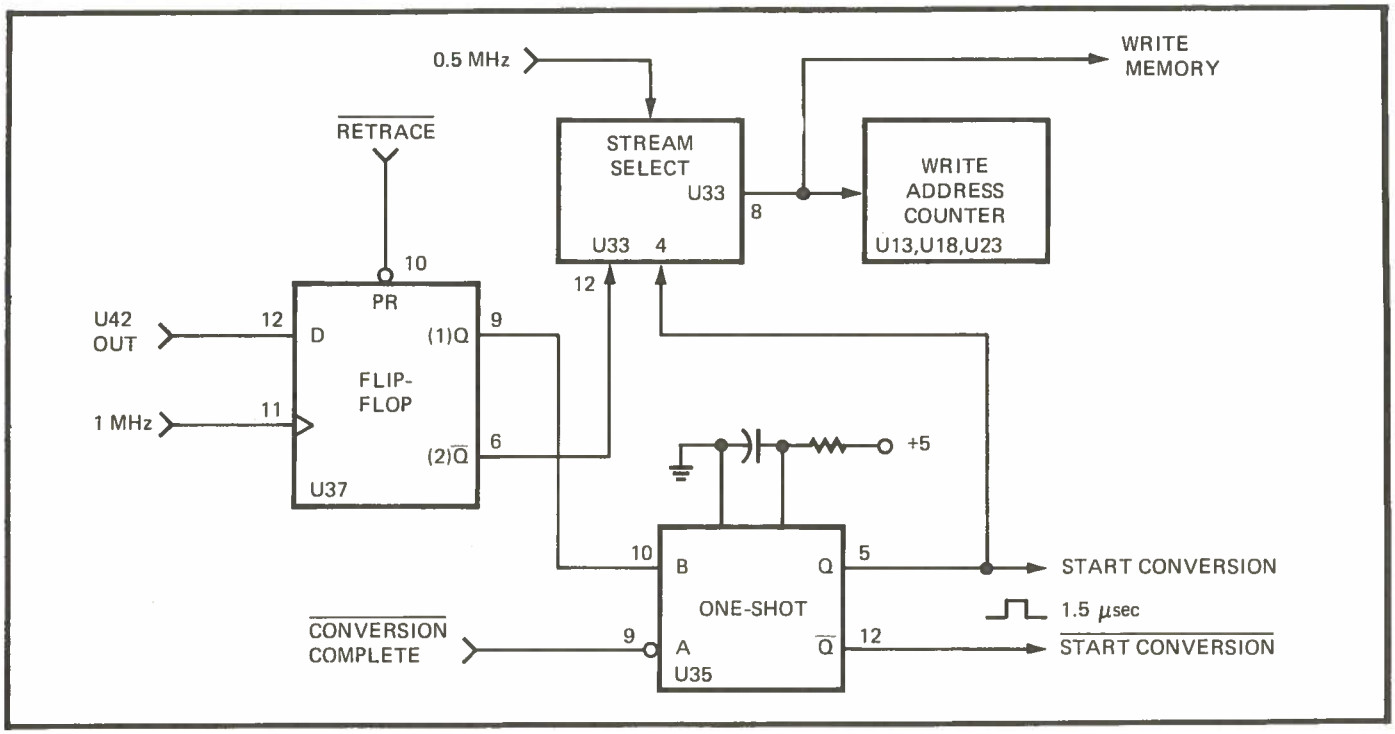

DATA WRITE TIMING

FIGURE 5-7

5.8.3 VERTICAL SIGNAL PROCESS (Input)

Sheet 2 of schematic drawing 14215 applies for this portion of the detailed description. Signal $\overline{A}/B$, which results from the LSB of the write address counter, actuates multiplexer A6U51 to alternately apply A channel and B channel data to amplifier A6U45 at pin 3. The output at pin 1 drives the positive input of comparator A6U48 at pin 2 through A6R62. The current from the DAC A6U39 pin 4 is forced to exactly cancel this current. Each conversion of A6U34 and A6U39 requires 8 microseconds to complete. The output of comparator A6U48 furnishes data to the D input of A6U34, the successive approximation register. The register is reset by pin 10 going low. Bit output Q7 is set low, and all others are set high (after the clock transition, to ensure proper reset), following which the S input must go high. On the next low-to-high clock transition the D input sets Q7 bit high and the next lower significant bit low, etc., until the eighth clock cycle, which sets the Q output at pin 2 low until the next reset.

The parallel output data from the SAR drives A6U39, a monolithic 8-bit digital to analog converter with complementary current outputs. The digitized vertical data is buffered onto the RAM memory bus by tri-state latch A6U4, whose clock input is the complement of the START CONVERSION mentioned above.

5.8.4 FILL MODE

At the leading edge transition of $\overline{\text{RETRACE}}$, the fill mode is engaged. The term FILL denotes the filling of memory with blanking, to provide sweep voltage from storage even though the horizontal input excursion is completed. The retrace signal clears A6U37A, resulting in the output at pin 6 enabling stream selector A6U33C at pin 12, to provide the 0.5 MHz clock to the write address counter. RETRACE signal clears the write address counter on the trailing edge transition of the signal via the action of inverter A6U20 and logic A6U29B.

The counting cycle initiated at the beginning of RETRACE continues to count number 1023, which results in a $\overline{\text{STOP}}$ output from A6U13 at pin 12. This feeds back to the first counter stage at A6U23 pin 7. During this period, the memory is loaded with a blanking bit which remains until retrace is over. The second phase of FILL mode, which entails the counter incrementing 0.5 MHz rate beginning at the end of RETRACE, continues until comparator output at A6U42 terminates the cycle and engages the NORMAL mode.

Upon completion of the FILL mode the flip-flop stages A6U38A and A6U38B control the return to NORMAL right mode. A delay feature is provided for two memory cycles, to allow the vector generator the proper time required for its reset.

5.8.5 CLOCK AND READ ADDRESS LOGIC

The read process is continuous and occurs under control of a crystal clock, repeating every 16 microseconds. A read address counter comprised of A6U12, A6U17 and A6U22 counts the pulses every 16 microseconds until the count of 511 is reached. At that point, a pulse is provided from A6U12 pin 13 which resets one-shot A6U35B. The purpose is to reset the ramp generator circuitry.

The read address counter is clocked directly by 2 MHz and enabled at its preset input by the ripple carry output of counter A6U27. Its nine bits of data are tri-stated onto the RAM address bus by buffers A6U2 and A6U7. The tenth or most significant bit (MSB) is derived from display select flip-flop A6U19A, which is preset by the B CHAN and cleared by the A CHAN. The clock input to A6U19A is the 15 microsecond output from one-shot A6U35B. Bit number ten is toggled if both channels are required, or latched in a logic state according to which single channel is required.

Crystal A6Y1 and NAND gate A6U28 generate a high-stability, 2 MHz, TTL master clock. Four-stage counter A6U27 successively divides the clock by 2 to produce the system read timing and synchronize write timing. NAND logic A6U26 at pin 6 provides a 16 microsecond period pulse to process the write timing strobe. The logic of NAND A6U32 at pin 8 furnishes a 16 microsecond period pulse to enable read address counter, which opens the RAM address bus via tri-state buffers A6U7 and A6U2. The logic at A6U29 pin 11 produces a 16 microsecond period pulse to latch a new sample or open tri-state A6U9 to the RAM data bus. The logic at A6U33 pin 3 creates a 16 microsecond period pulse to enable gate driver A6U47 at the vertical vector generator.

A read cycle begins with the 2 microsecond pulse at A6U26B pin 6, which is used first to disable the write timing circuitry at A6U32B. If a write cycle is in progress, it will finish before responding to the read disable. The 2 microsecond pulse from A6U26B also feeds forward through A6U32D and A6U32C, where the output at pin 8 occurs one microsecond later and has a duration of one microsecond. This ENABLE READ ADDRESS opens the tri-state buffers A6U2 and A6U7 as described above. A quarter of microsecond later, flip-flop A6U36 pin 5 drops low, turning on the chip select line, allowing the RAM to output data onto the RAM data bus.

The WRITE TIMING circuitry performs a gatekeeper function to subordinate write cycles to read cycles. A write request at A6U21C is forwarded to latch A6U30 unless disabled at the gate. (By pushing the SAVE button.) If that read timing pulse at A6U32B pin 4 is enabled, that write request is forwarded to latch A6U30B. On the next positive going transition of the 2 MHz clock at A6U25B, the write request is translated into a write enable chip select command for the RAM. A6U25B resets the A6U30 stage on the next clock cycle transition.

5.8.6 VERTICAL OUTPUT CIRCUITS

Tri-state buffer A6U9 latches the RAM data bus into A6U40, a monolithic, 8-bit, D to A converter with complementary current outputs to drive amplifier A6U46. Transistor A6Q1 boosts the single-ended drive output to vector generator A6U46B and A6U46C, which integrates to each new bit of analog by the sample-and-hold action of gates A6Q2 and A6Q3. Storage capacitor A6C40 holds the old value while A6U46B buffers the new value, creating a continuous line segment by integration at A6U46C. Amplifier stage A6U45 low-pass filters the output to the vertical deflection. Driver A6U47 provides the gate control for the sample-and-hold, resetting the integrator via A6Q3.

5.8.7 HORIZONTAL OUTPUT AND BLANKING CIRCUITS

Circuitry located on schematic 14215 page 1 (labeled RAMP GEN) performs the equivalent to a D to A function for the horizontal signal, under the control of the read address counter. The B output of A6U12 drives the A input to one-shot A6U35B, whose B input is wired high. The 15 microsecond control pulse at pin 13 drives gate A6U51, to short A6C26 and reset the integrator on count 512 of the read address counter and drives the horizontal sweep via A6U50 in MEMORY mode.

The integrator output drives the non-inverting input of comparator A6U43. The inverting input, which is the horizontal signal in, controls A6U43 to activate A6U41. This is an 80 microsecond one-shot used to generate the CRT trace cursor whenever there is coincidence between real time sweep and refresh sweep. A high at pin 1 disables A6U41 (to prevent a cursor on sweep rates faster than one second), when retrace at A6U36 pin 11 clocks through a high D input at pin 12.

A true signal from A6U29 pin 3 can be present here when both channels A and B are selected. A jumper installed from this point to A6U26 pin 2 provides for dashing of B channel only when both A and B are displayed. When removed, B channel is always dashed.

The function of memory blanking at A6U26 pin 8 can be determined at board pin 6 as a positive true MEM BLANKING level by inversion in a stage of A6U24. When RETRACE BLANKING from A6U35 pin 4 is false (retracing the ramp generator), memory blanking occurs. When the false MEMORY BLANK BIT, generated by RAM A6U16, pulls A6U19 pin 12 low, the next .2 microsecond pulse from A6U29 pin 11 (LATCH NEW SAMPLE) clocks the Q output low at pin 9, to provide memory blank at A6U26. It also generates a sampler hold-off

signal for the 1044A response recorder. Finally, blanking occurs via inverter A6U31 to identify B channel when displayed, by chopping its trace into "dashes".

5.9 FRONT PANEL

This minor assembly contains the CRT control elements described earlier, all of which interface the display via the deflection assembly A4. The single exception is the $\overline{\text{MEMORY-ON}}$/SAVE control, which routes a negative true or ground connection to the memory board when active. Actual circuit functions are described in earlier paragraphs, and are shown schematically on drawing 14619.

5.10 IEEE INTERCONNECT AND INDICATOR

This facility is installed on all standard versions of Model 1038-D14 to accommodate the A10 option, or IEEE General Purpose Interface Bus.

This feature is a customer-selected option and is covered in detail in Section 7. The indicator portion comprises 3 LED displays on the front panel, situated under the heading GPIB, and illuminate appropriately to indicate bus status. This feature can be added at a date later than time of purchase, due to the design of the 1038-D14 mainframe system.

SECTION 6

MAINTENANCE

6.1 PERIODIC MAINTENANCE

The following maintenance should be performed once each year unless the instrument is operated in an extremely dirty or chemically contaminated environment, or is subjected to other severe abuse. In such cases, more frequent maintenance is required.

a. Blow out all accumulated dust with forced air under moderate pressure.

b. Inspect the instrument for loose wires and damaged components. Check to see that the plug-in PC Boards are properly seated in their sockets and that all wire lead connectors are properly seated on their PC Board pins.

c. Using a cloth dampened in mild detergent solution, clean the exterior of the equipment enclosure. Do not use abrasive cleaners, scouring powders, and harsh chemicals. Wipe soap residue off with a clean damp cloth, then dry with a clean dry cloth.

d. Make a performance check in accordance with the procedure found in Section 4. If the performance is within required specifications, no further service is required.

6.2 CALIBRATION

The Model 1038-D14 employs solid state components throughout (excluding the CRT) which are extremely reliable and generate little heat. Consequently, there is little drift due to component aging, and adjustments to the instrument are rarely required. If measurements indicate that an adjustment is set within the stated range, do not attempt to put it "right on". It is often the case that variations in the equipment used to make the test account for small differences in measured values. Since some adjustments may be interactive, BE ABSOLUTELY SURE THAT AN ADJUSTMENT IS REALLY REQUIRED BEFORE MAKING IT.

If a component is replaced, only the minimum of calibration steps should be performed, depending upon where in the circuit it is located.

6.2.1 TEST EQUIPMENT REQUIRED

Digital Voltmeter, Fluke 8600 or equal

Plug-in Extender/Calibration Fixture Kit, PM Model 12715

PM Horizontal Plug-in Unit, H11 or H13

6.2.2 POWER SUPPLIES (Low Voltage)

The three power supplies constituting A3 Assembly are located to the rear of the instrument. After gaining access to the interior of the unit per paragraph 6.3.3 (Figure 6-1), perform the procedure outlined below:

a. Connect the DVM between TP32 and TP35 (common). Measure -15V, using A3R37 to adjust reading within ±10mV.

NOTE

When performing adjustment of low voltage supplies, always start with -15 volt supply.

b. Connect the DVM between TP33 and TP35. Measure +15V, using A3R23 to adjust reading within ±10mV.

c. Connect the DVM between TP38 and TP39 (common). Measure +5V, using A3R13 to adjust reading within ±50mV.

6.2.3 CRT OPERATION

DANGER: HIGH VOLTAGE POTENTIALS EXIST INSIDE THE INSTRUMENT WHEN POWER IS APPLIED. ALWAYS EXCERCISE SPECIAL CAUTION TO SAFEGUARD BOTH PERSONNEL AND TEST EQUIPMENT.

The operating voltages supplied to the CRT are generally very stable, as is the CRT device construction itself. (That is, all spacings between grids and electrodes, which determine tube performance, are based upon a rigid glass and metal structure.) Consequently, it is unlikely that any adjustments will be required, unless the CRT (or a component closely associated with it) has been replaced.

After gaining access to the deflection and high voltage power supply circuits, perform the procedure outlined below:

a. If you are starting calibration at this point, first follow the procedure outlined in Paragraph 6.2.2.

b. Install the shorting board, assembly number 12719 (part of kit 12715) in the horizontal or lefthand plug-in slot. Install the extender from the kit (assembly number 12716) in the A channel or middle plug-in slot.

c. Select the following switch positions:

Shorting Board: A CHANNEL ON

Extender: CAL

VERT

CENTER

Turn POWER switch ON and warm up instrument.

d. On the CRT front panel, set the FOCUS control mid-range. Advance the INTENSITY control clockwise and check that a spot can be obtained, then turn the control fully counterclockwise.

e. Locate the deflection circuit adjustment panel (near the handle on top) and turn INTENSITY LIMIT A4R48 fully clockwise, using insulated screwdriver. Adjust the INTENSITY CUT-OFF LEVEL A4R50 until the dot on the CRT just disappears.

f. Turn the front panel INTENSITY control fully clockwise. A dot should appear on the screen. Adjust A4R48 slowly counterclockwise until the dot just starts to bloom or enlarge, then back it off about 5 degrees.

g. Verify proper setting of Z-Axis amplifier by turning front panel INTENSITY control fully counterclockwise, noting disappearance of spot, and at mid-range the spot is normal viewing brightness. Continue rotating fully clockwise, noting a very bright spot with only minimum blooming.

h. Ensure that FOCUS control is set mid-range. Gain access to the high voltage power supply per paragraph 6.3.3, Figures 6-2 and 6-3, and adjust A5R14, FOCUS CENTER, for best focus. (A5R14 is located to the right of the instrument handle, near rear of unit.)

i. On the deflection circuit, locate the four deflection transistors (A4Q4, A4Q5, A4Q6, and A4Q7) by removing adjustment panel near handle on top. Measure and record the voltages on the collectors or cases of these transistors. Find the average of the four values, and adjust GEOM, A4R148, until the voltage on its wiper measures the average value ±5 volts.

NOTE

A4R148 and ASTIG (A4R145) are located below the horizontal and vertical gain and position controls.

j. Rotate the front panel FOCUS control through its range while observing the dot. Adjust ASTIG, A4R145, until the dot remains as round as possible throughout the entire range of FOCUS adjust.

6.2.4 DEFLECTION SYSTEM

DANGER: THIS CIRCUIT BOARD CONTAINS +250V DC WITH A HIGH CURRENT CAPABILITY, AND IS POTENTIALLY LETHAL. MAKE CERTAIN THAT ALL CONNECTIONS TO THE BOARD ARE PROPERLY MADE BEFORE STARTING THE CALIBRATION PROCEDURE.

a. If you are starting calibration at this point, first follow the procedure outlined in paragraphs 6.2.2 and 6.2.3, steps a, b, c.

b. Adjust VERT POS A4R85 until the spot is centered vertically on the CRT. Select +3DIV position on toggle switch situated on extender assembly 12716.

c. Adjust VERT GAIN A4R77 until the spot is located vertically on the third division above the center graticule line. Turn +3DIV switch back to CENTER and repeat steps b and c until no further adjustment is required.

d. Turn primary power OFF and relocate the extender assembly to the B channel or right-hand plug-in slot. Restore primary power to the instrument, and select B CHANNEL ON at shorting board.

e. Adjust B CHANNEL BAL control A4R14 to center the spot.

f. Turn primary power OFF and relocate the shorting board to the middle or A channel slot. Also relocate the extender to the horizontal or left slot.

g. Select the following switch positions:

Shorting Board: A CHANNEL ON

Extender: CAL

HORIZ

CENTER

h. Adjust HORIZ POS A4R96 until spot is centered horizontally on the CRT. Set switch to +3DIV and adjust HORIZ GAIN A4R88 until spot is located on the third division to the right of the center graticule. Turn +3DIV switch back to CENTER and repeat until no further adjustment is required.

i. Trace Rotation adjustment on front panel of Model 1038-D14 requires installation of horizontal plug-in. Adjust TRACE ROTATE for best parallel alignment along the center horizontal graticule.

6.3 TROUBLESHOOTING

Information provided in this section should enable a technician to locate a malfunction and determine the cause. References to appropriate Section 5 texts are provided as an aid to understanding detailed circuit functions.

6.3.1 EQUIPMENT REQUIRED

The following items are required in the performance of service on a malfunctioning instrument:

1. A kit of ordinary technician's hand tools for disassembly, repair and reassembly.
2. A DVM Multi-meter with 4.5 digit resolution and ranges from 1V to 1kV, with 10 megohm input impedance.
3. An oscilloscope with 15 MHz bandwidth and 50mV/Div sensitivity.
4. A Volt-Ohm-Milliampmeter with a full-scale range of 5kV (minimum) and 20,000 ohms/volt input impedance.
5. A special plug-in extender and calibration fixture kit, PACIFIC MEASUREMENTS Part Number 12715, consisting of a shorting board, assembly number 12719, and an extender, assembly number 12716.

6.3.2 INITIAL SET-UP AND PRELIMINARY CHECKS

Step 1: Ensure that the POWER switch is OFF. Remove any plug-ins. Install the shorting board into the left-most plug-in compartment (horizontal slot). Install the extender into the middle plug-in compartment (A channel slot).

Step 2: Select the following switch positions:

Shorting Board: A CHANNEL ON

Extender: CAL

VERT

CENTER

Step 3: Connect the instrument to an ac power source that meets with selected ratings on input (power cord) connector. (Do not turn ON.) Rotate INTENSITY control fully counterclockwise.

Step 4: Perform preliminary checks per Table 6-1.

TABLE 6-1

PRELIMINARY CHECKS

TEST	INDICATION	REMARKS AND PROBABLE CAUSES FOR NEGATIVE INDICATIONS
1. Press POWER pushbutton switch ON	Red POWER indicator should illuminate	1. Rear panel fuse, F1 2. Defective power cord 3. Wiring between switch and rear panel 4. Power switch defective 5. POWER indicator lamp faulty 6. Rear panel line-voltage selector set to incorrect voltage
2. Advance intensity control clockwise; set focus as required	After 3 minute (maximum) warmup, a dot should appear at center screen. It should be possible to achieve proper focus	See detailed troubleshooting information per 6.3.3 and Tables 6-2 and 6-3
3. Go through the performance checks, Sections 4.3 and 4.4	As specified in Sections 4.3 and 4.4	Vertical or Horizontal deflection more or less than 3 divisions; adjust vertical or horizontal gain per paragraph 6.2.4.

6.3.3 DETAILED TROUBLESHOOTING

Any malfunction noted during performance of preliminary checks could be due to incorrect setting of dc power supplies. Gain access to the low voltage power supply assembly (A3) by by removing the right-hand top/side cover panel. Figure 6-1 shows the partially disassembled unit, with the three adjustment controls and test points along the top of A3 PCB (near the right edge of the photo). Measure the voltages and adjust the controls per paragraph 6.2.2.

The 250 volt power supply can be checked on the deflection circuit assembly A4, at TP611. Since this supply is unregulated, its value depends upon line voltage and load current.

Table 6-2 provides further guidance in isolation of the cause of power supply failure. The regulated supplies are similar and are described in general terms.

Another possible malfunction is no trace displayed on the CRT face. Assuming the low voltage power supplies measure normal, the beam appears only if the following conditions are met:

- Electrons are emitted by the cathode.
- The control grid is not too negative with respect to the cathode.
- The focus electrode has a suitable voltage applied.
- The horizontal and vertical deflection electrodes have nearly equal potentials.
- The 1.5kV power supply potentials are correct.

Table 6-3 provides further guidance in isolation of the cause of absent trace malfunction.

NOTE

With power off, remove the metal housing labeled DANGER HIGH VOLTAGE, Figure 6-2, to gain access to the high voltage power supply assembly A5. Figure 6-3 shows the supply when access is gained.

Certain faults may occur with a trace visible on the CRT display, as enumerated in Table 6-4. In addition, you may be able to isolate the cause to a vertical, horizontal, or intensity control circuit by observing if the operation is normal with respect to a given direction or intensity. If the performance is near normal, but still out of limits after repair, perform a full calibration per paragraph 6.2.

6.3.4 CRT REPLACEMENT

WARNING: USE EXTREME CARE WHEN HANDLING A CRT. AVOID STRIKING THE TUBE ON ANY OBJECT WHICH MIGHT CAUSE IT TO CRACK OR IMPLODE. WHEN STORING A CRT, PLACE IT IN A PROTECTIVE CARTON OR SET IT FACE DOWN IN A PROTECTED LOCATION ON A SMOOTH SURFACE, WITH A SOFT MAT UNDER THE FACEPLATE TO PROTECT IT FROM SCRATCHES.

The display tube for the 1038-D14 measurement system is replaceable in the field by qualified service personnel. The metal CRT housing or shield has been designed to assure proper positioning of the tube when it must be replaced.

a. Turn POWER switch OFF and disconnect cord. Remove the instrument cover panel on the left side per Figure 6-4.

b. Locate the tube socket connector on the base of the CRT neck and remove by pulling it off.

c. Locate the tube clamp protruding from the neck portion of CRT shield and loosen it with a screwdriver.

d. Locate the anode high voltage connector near front of CRT and disconnect.

e. Remove two screws securing the bezel to CRT face per Figure 6-5. Remove the bezel and light filter.

f. Push gently on the tube base, guiding the tube through the front with one hand on tube face.

NOTE

At this time only disengage tube from its seating and remove about half way, to enable access to the trace rotation coil affixed to the tube.

g. Remove the tape strips securing the trace rotation coil to the wide segment of CRT neck. The removed coil can be left in the CRT shield for now.

h. Complete the removal of the CRT, observing two important safety precautions:

   - Provide a soft cushioned place for resting the tube.
   - Be very careful not to strike it sharply against anything.

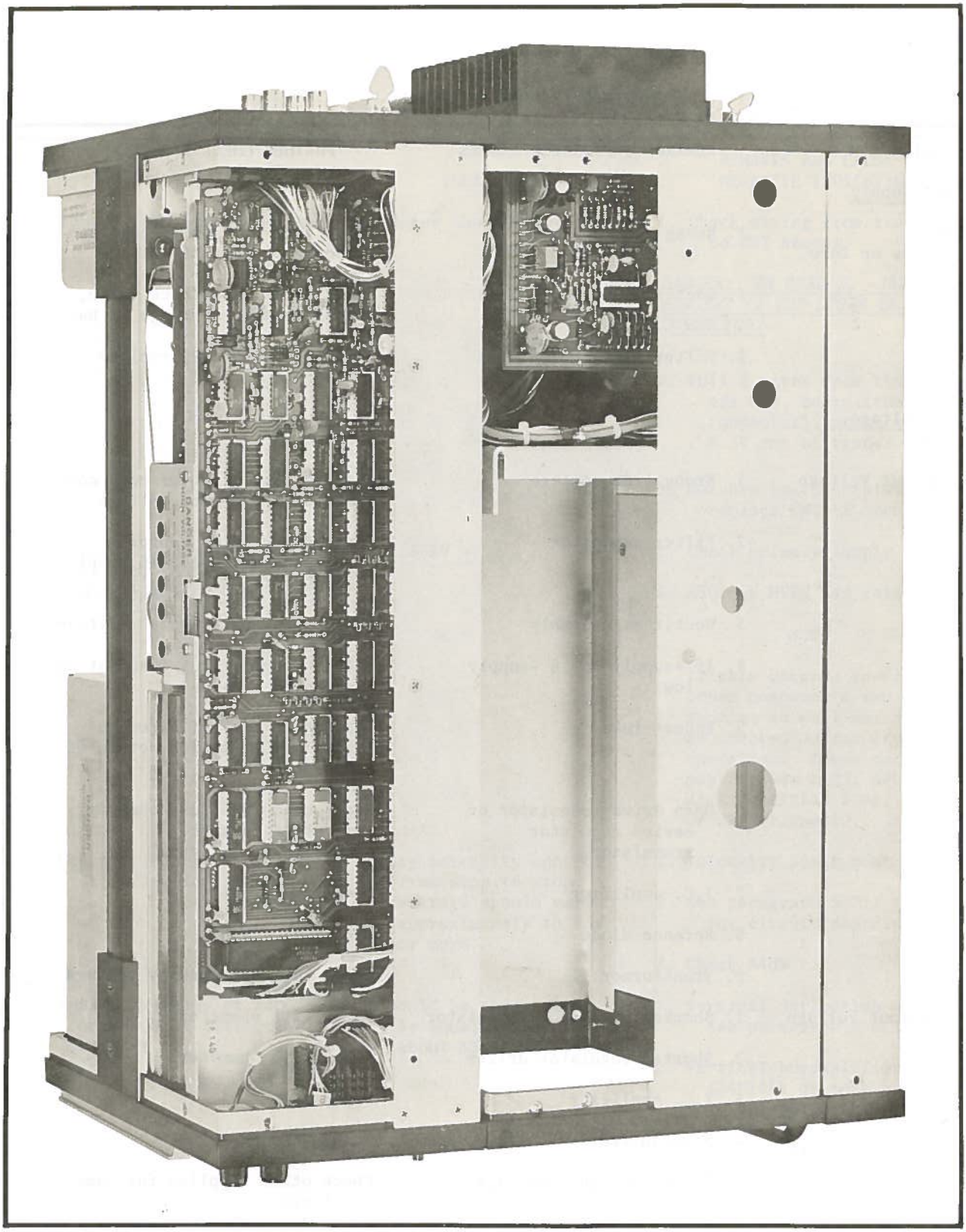

GENERAL VIEW WITH COVER REMOVED

FIGURE 6-1

TABLE 6-2

POWER SUPPLY TROUBLESHOOTING

INDICATION	REMARKS & PROBABLE CAUSES	FURTHER CHECK & REMEDY
250 Volt Supply		
+250V Reads Low or Zero	1. Wrong line voltage	Reset switch at power cord connector to correct voltage
	2. Rectifier(s) A4CR1	Check diode front/back ratio, replace entire bridge if bad
	3. Filter capacitor A4C1	If ripple > 5V P-P, replace
All Low Voltage Supplies		
Low Output Voltage	1. Wrong line voltage	Reset switch at power cord connector to correct voltage
	2. Filter capacitor	Check P-P ripple; approx. values are .1V for +5 supply and .2V for ±15 supply
	3. Rectifier Assembly	Measure raw unregulated voltage
	4. If +supply low & -supply low	Check -supply first & adjust as required
	5. Excess load	Disconnect each of wires to supply & check for return of operation
	6. Open drive transistor or series regulator transistor	See Section 5.5; use ohmmeter to check further
	7. I.C. amplifier	See Section 5.5
	8. Refence diode	See Section 5.5
	9. Transformer T1	Check rms ac secondary voltage
High Output Voltage	1. Shorted regulator transistor	Check with ohmmeter
	2. Shorted regulator driver	Check with ohmmeter
	3. I.C. Amplifier	See Section 5.5
	4. Misadjusted	Readjust
	5. Short to higher voltage supply	Check other supplies for same voltage
Excessive Ripple	1. Wrong-line voltage	Reset to correct line voltage
	2. Filter capacitor	Replace if raw ripple excessive

TABLE 6-3

ISOLATING THE CAUSE OF ABSENCE OF TRACE ON CRT

TEST	INDICATION	REMARKS AND CAUSE OF NEGATIVE INDICATION
Look at CRT near connector end	Heater should glow red	1. Check wiring from transformer to CRT heater *DANGER: IN STEP 2, -1500V DC IS PRESENT AT THE OTHER END OF THE CONNECTOR.* 2. Pull 2 wires from transformer off H.V. board (there is a connector); measure approx. 6.3V rms at transformer end 3. Measure heater resistance; replace CRT if open
Carefully measure 1.55kV at test point 504 using H.V. range of VOM	-1.55kV ±75V	1. Check primary supply wiring 2. A5Q1 in HVPS has failed *NOTE* *If this occurs, several other components may be defective as well and should be checked before attempted operation. These components may include A4Q3, A4U8, A4CR12, A5R10, A5R8, A5T1, or CRT filament.*
Measure collector of A4Q3 of Deflection circuit	Vary intensity control from stop to stop. Voltage should vary approximately to 85V or more	1. Intensity limit control adjust 2. See paragraph 5.7.1 (manual) for circuit description 3. Check A4U8
Measure voltage at A4Q6 and A4Q7 of Deflection circuit	Should be approximately equal and average about 130V (or "div")	1. Vertical deflection amplifier; see paragraph 5.6.3 manual 2. Vertical preamplifier A4U14B (A4U14A) or push-pull A4U16A. To determine this measure input to deflection amplifier at A4U14 pin 3. Voltages should be OV ±0.3V. Circuit description Section 5.6.3
Carefully measure focus voltage at wiper of focus pot with VOM on H.V. range (See paragraph 6.3.5, Figure 6-8)	Should be approximately -1100V	1. VOM may load circuit, so try varying focus control to see if voltage changes

TABLE 6-3 ISOLATING THE CAUSE OF ABSENCE OF TRACE ON CRT (Contd)

TEST	INDICATION	REMARKS AND CAUSE OF NEGATIVE INDICATION
Look for trace after long warm-up	Dim trace visible or none	1. CRT is defective. You should be sure that all conditions above have been met before assuming a defective CRT.

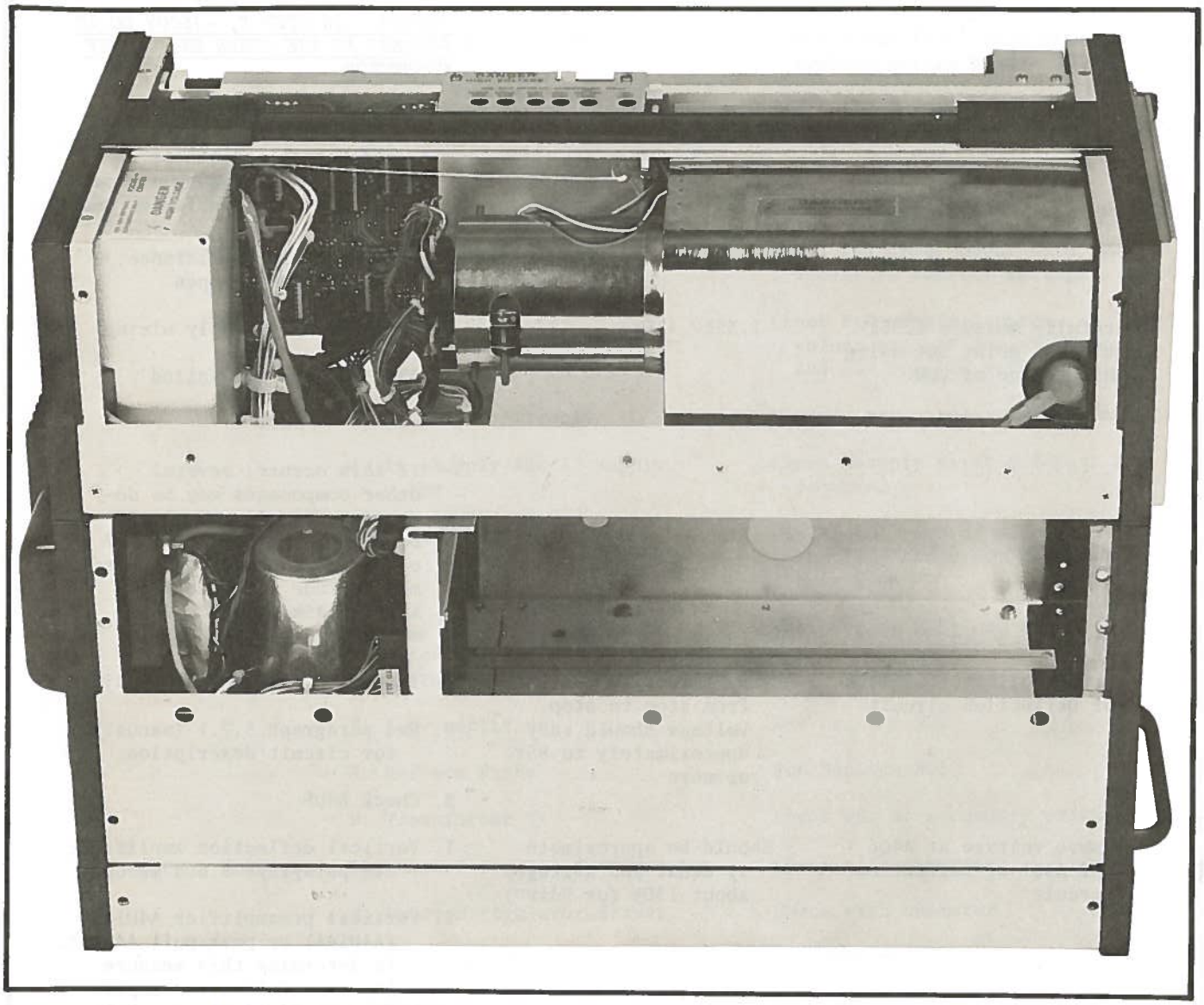

HVPS HOUSING

FIGURE 6-2

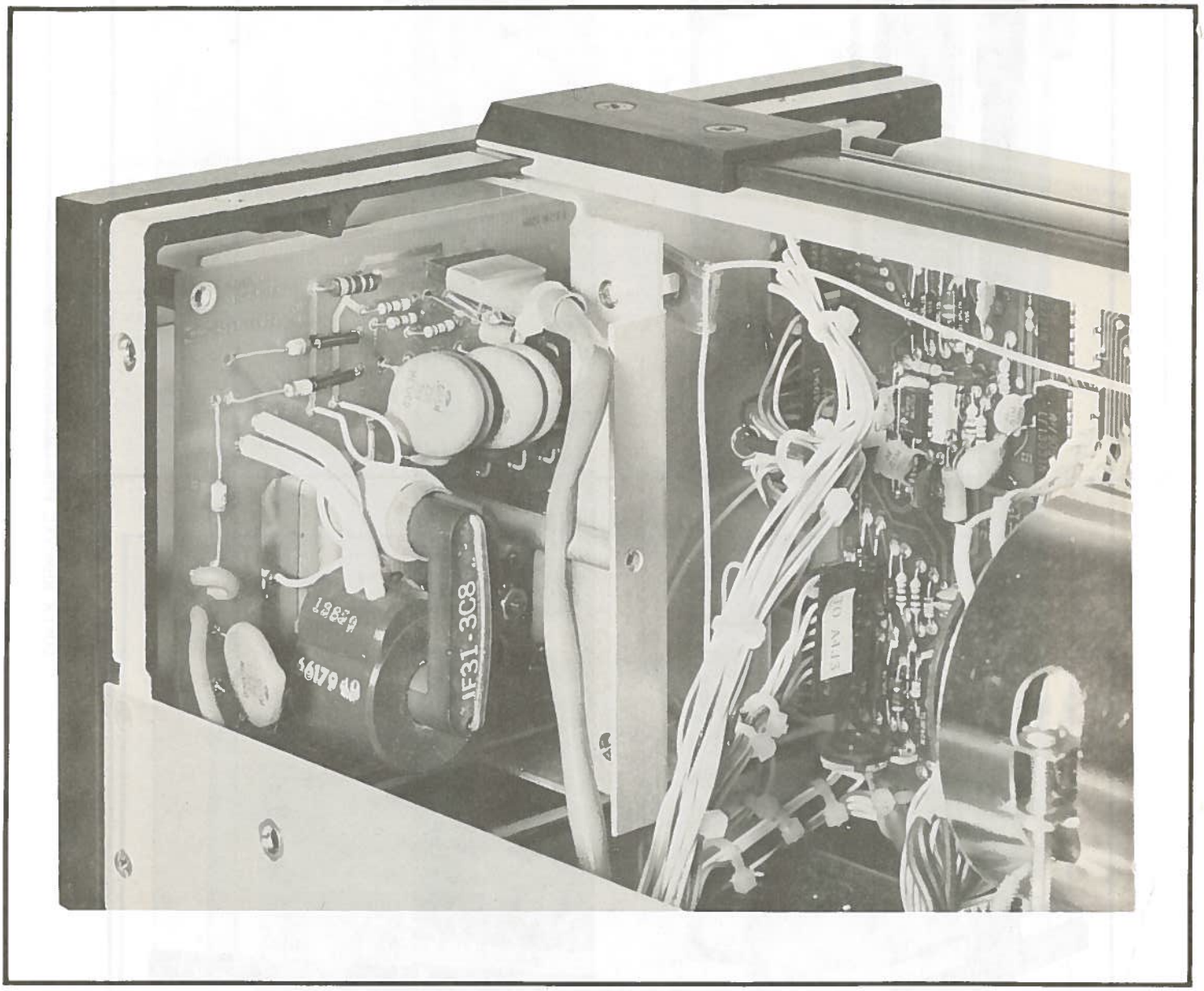

HVPS WITHOUT COVER

FIGURE 6-3

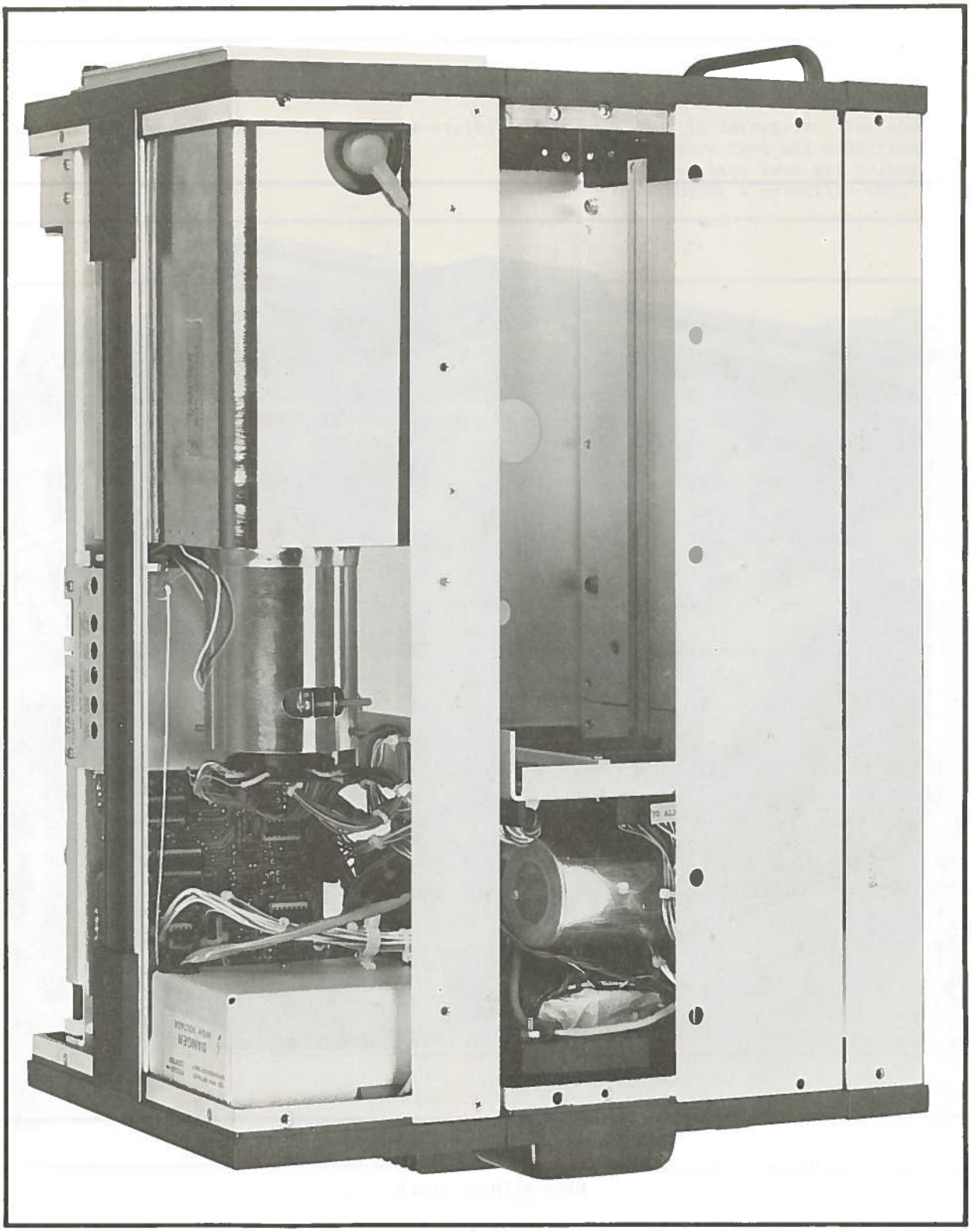

COVER REMOVAL FOR CRT REPLACEMENT

FIGURE 6-4

TABLE 6-4

TROUBLES WITH TRACE VISIBLE

INDICATION	REMARKS & PROBABLE CAUSE	FURTHER CHECKS
Bright off-axis trace	1. Beam finder switch shorted	Check with VOM, replace
	2. Grid control circuit A4Q3 (Deflection)	Measure A4Q3 collector; See Table 6-3
	3. Focus control	See Table 6-3
Beam doesn't deflect when fixture switch set to +3	1. Deflection preamplifier	See paragraph 5.6.3
	2. Deflection amplifier	See paragraph 5.6.3
Intensity starts to brighten then dims as intensity control rotates clockwise	CRT probably defective	
Nonlinear trace	Adjust GEOM and ASTIG controls	

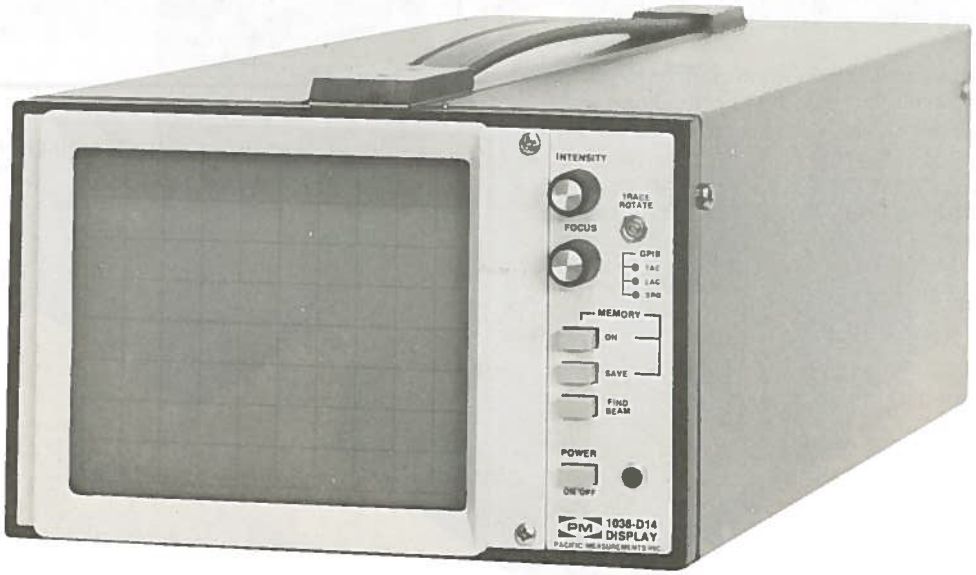

BEZEL INSTALLATION

FIGURE 6-5

Installation of the replacement CRT is essentially the reverse of the removal procedure. Some notes of precaution include the following:

1. Ensure that the CRT anode is oriented properly, to allow re-connection of the high voltage lead.

2. If the tape securing trace rotation coil appears to lack adhesive, replace with new (equivalent) tape.

3. DO NOT OVER-TIGHTEN clamp on CRT neck. (Later versions may have a spacer installed to prevent overtightening.)

6.3.5 REPLACING OTHER COMPONENTS

Illustrations found in this portion of text should be helpful in disassembling the unit to replace various electronic components.

POWER SUPPLY PCBs (A3 AND A5)

The low voltage power supply, A3, can be replaced with only the instrument cover panel on the right side removed, per Figure 6-1. Before disconnecting the assembly from its plug-in connector, it is necessary to remove three phillips-head screws (in line vertically with AUX 2 BNC) as shown in Figure 6-6.

If it is necessary to service other elements of the low voltage power supply system, the entire lower half of the rear instrument panel can be disassembled. Remove eight phillips-head screws (six at the top and bottom edges) around perimeter of the panel and allow it to swing down, as shown in Figure 6-7.

The high voltage power supply assembly, A5, can be replaced by removal of six phillips-head screws from the upper half of the rear instrument panel (reference Figure 6-7). Remove the pan-head phillips screw that secures the High Voltage Power Supply cover. The entire upper panel to swing down as shown in Figure 6-8.

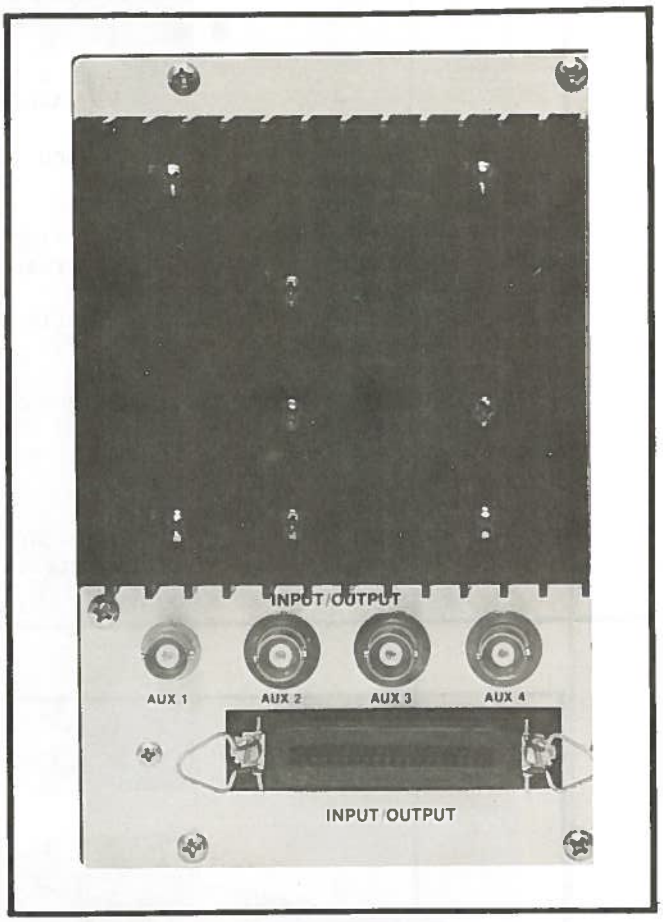

REMOVAL OF PANEL HARDWARE

FIGURE 6-6

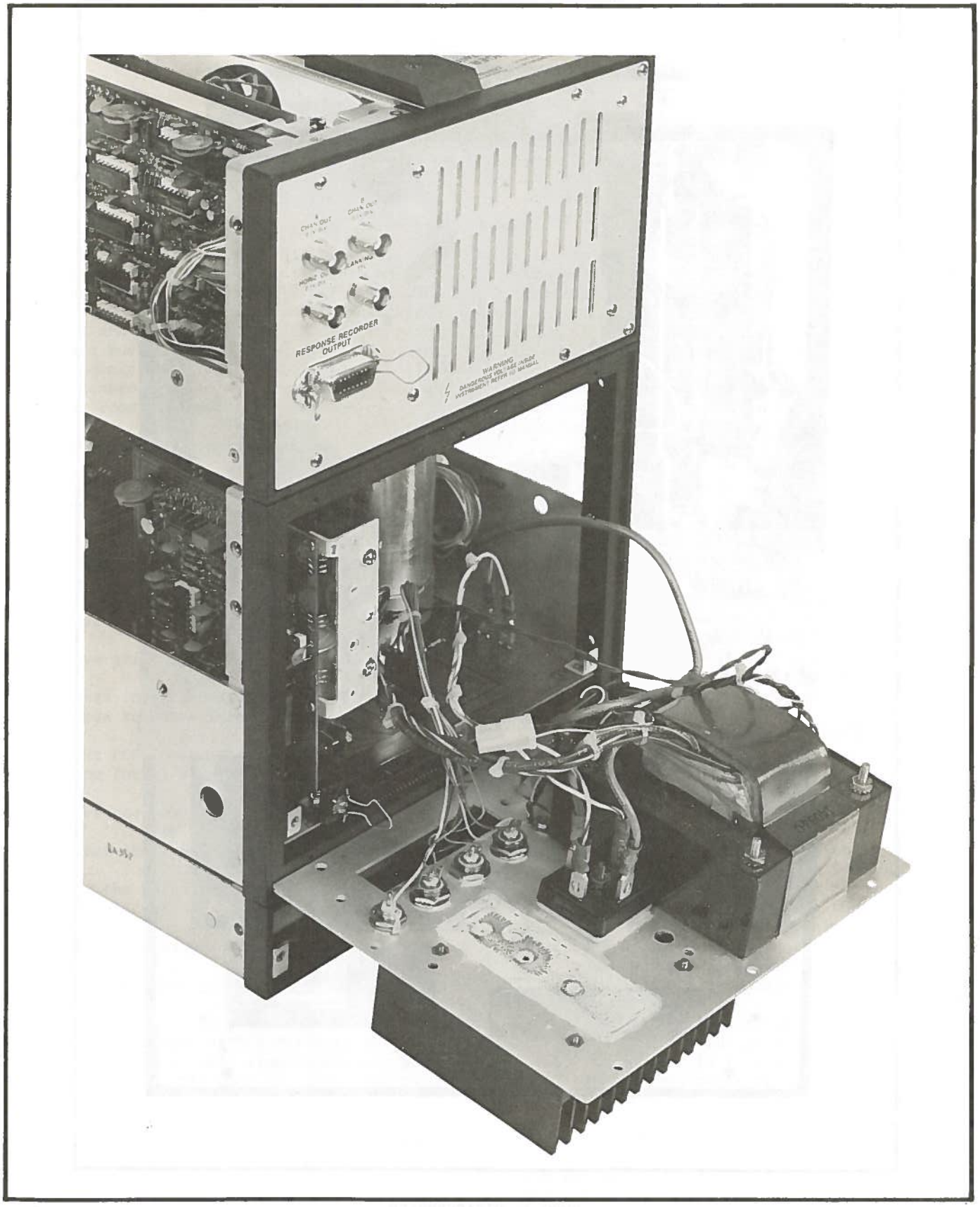

POWER SUPPLY A3 DISASSEMBLED

FIGURE 6-7

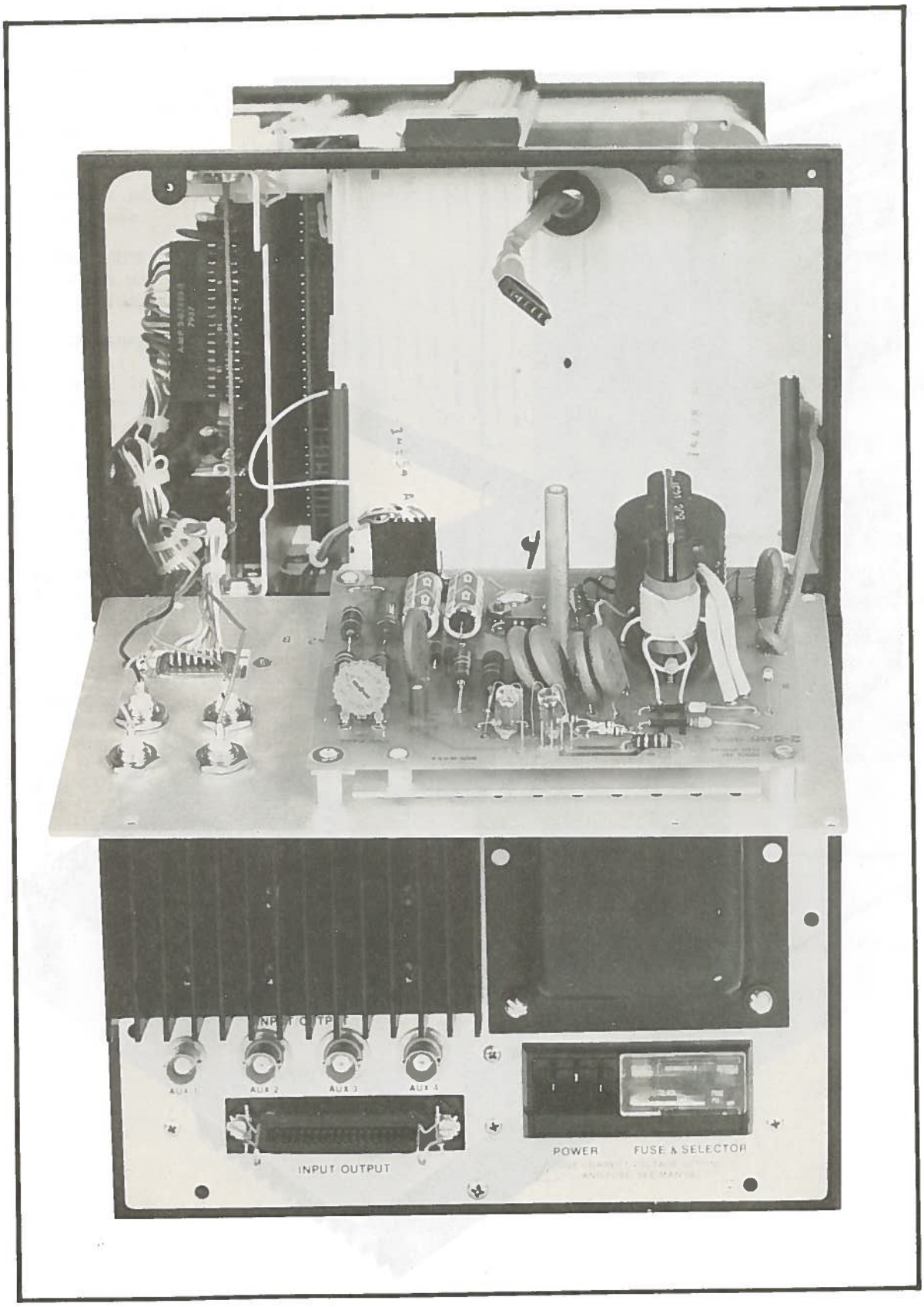

HVPS A5 DISASSEMBLED

FIGURE 6-8

SECTION 7

GPIB INTERFACE

7.1 SCOPE

This section describes the IEEE Interface Board, including circuit theory, functions, and calibration. Programs are contained in an Application Note, separate from this manual.

7.2 GENERAL DESCRIPTION

Option 04 of the Model 1038-D14 provides for connection to a remote Controller via an interface board furnished by PACIFIC MEASUREMENTS. The connection conforms to IEEE Std 488-1978 and is known as the General Purpose Interface Bus (GPIB). The bi-directional interface permits the 1038-D14 to send data (Talk) to the Controller and to receive both data and commands from the Controller (Listen).

7.3 INSTALLATION/PREOPERATING DATA

The additional hardware received when Option 04 has been selected is one printed wiring board assembly, drawing 14180. The Model 1038-D14 is pre-wired to accept this plug-in circuit card and no modification is required. To install the IEEE Interface Board (Figure 7-1):

a. Remove bottom cover;

b. Remove grille;

c. Release interconnect cable and connector secured to connector;

d. Insert PCB (component side visible) on the bottom (near) side of aluminum flanges;

e. Insert the board in the connector;

f. Connect the interconnect cable;

g. Screw the board to the aluminum flanges (four places);

h. Replace the bottom cover;

j. Install the new grille.

The IEEE Board must be provided with a device address, by programming 5-bit binary switch S4 on the rear panel. Selecting ON for any bit sets a logic 1 on the corresponding line to tri-state buffer U2.

After installation, the IEEE Interface Board must be calibrated as shown in paragraph 7.6.1.

7.4 THEORY OF OPERATION

Figure 7-2 is a simplified block diagram of the circuitry involved, which is shown schematically on drawing 14181. The three analog inputs are multiplexed into a single A/D converter (U13) whose output connects to the Z80 CPU data bus via an 8255 I/O device. This programmable interface exchanges data bi-directionally, inputting digital words to the CPU and outputting CPU words to the D/A (U31) converter. (A second 8255 device provides control to the multiplexers, etc.)

The exchange of data between 1038-D14 and a Controller is effected bi-directionally via U9 which manages the data transfer protocol.

The Z80 CPU is a microprocessor utilized in the coordination of all operations involved in the processing, formatting, and exchanging of display or plug-in data. EPROM devices U25 and U26 contain program firmware. 2K x 8 RAM storage is supplied by U18 through U21.

7.4.1 ANALOG INPUT/OUTPUT CIRCUITS

Refer to sheet one of drawing 14181 for this discussion. Multiplexer U17, under the control of CPU (via Programmable Interface U10), applies channel A, channel B, or the Horizontal signal to buffer stage U16B. (Some level shifting by R9, R4, and R2 occurs here, to center the signal about zero.) The output is inverted in U16B, which feeds the signal to absolute value circuit U16C and D. This circuit converts signals of either polarity from the multiplexer into a positive-going signal plus sign bit.

U15 is the sign comparator; its output with logic equal to A "plus" is buffered and inverted by U24 and drives U30. The analog output of the absolute value at TP1007 feeds the A/D comparator U15A at pin 5. The other input at U15A is derived from U36, which is driven by the D/A converter output at pin 9 of U31. The selected input is compared with the output of U36, which represents the value supplied by U13. This value is revised twelve times, each attempt a closer successive approximation to the input level. This value is read by U30 and is available for transmission to the D14 CPU.

The net effect of this process is the creation of a 12-bit data word (plus a sign bit, from U15B), to be read by Programmable Interface U30. The conversion is clocked at 500 kHz at U13, where the approximation register outputs are buffered onto the interface ports (and into U31 D/A) by U23 and U24.

Conversion of digital data words into analog at U31 can be the result of either U13 successively approximating multiplexed input signal, or the CPU transmitting data via the Programmable Interface. In either case, the analog current into U36 is converted to voltage and feeds

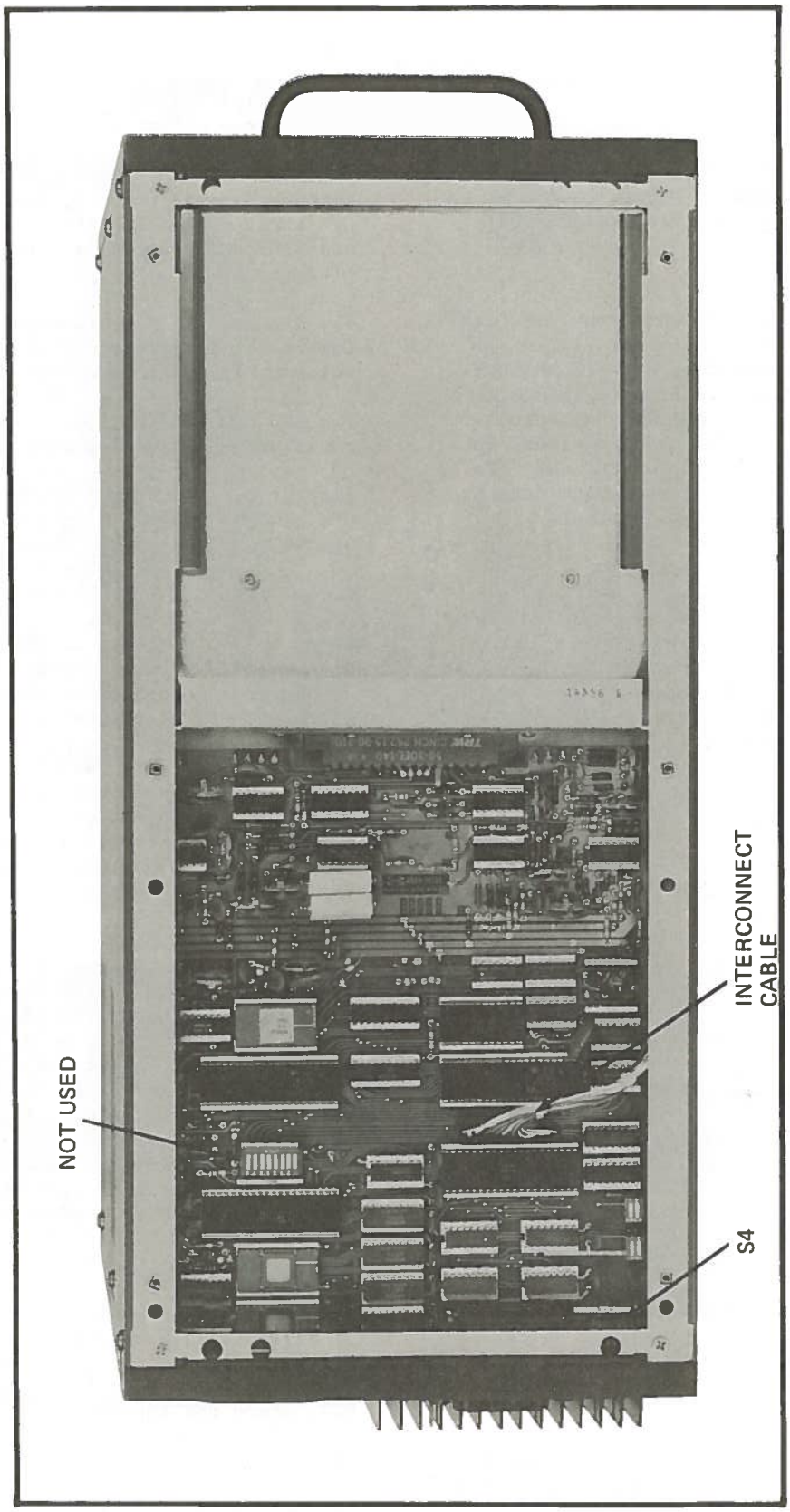

IEEE INTERFACE BOARD

FIGURE 7-1

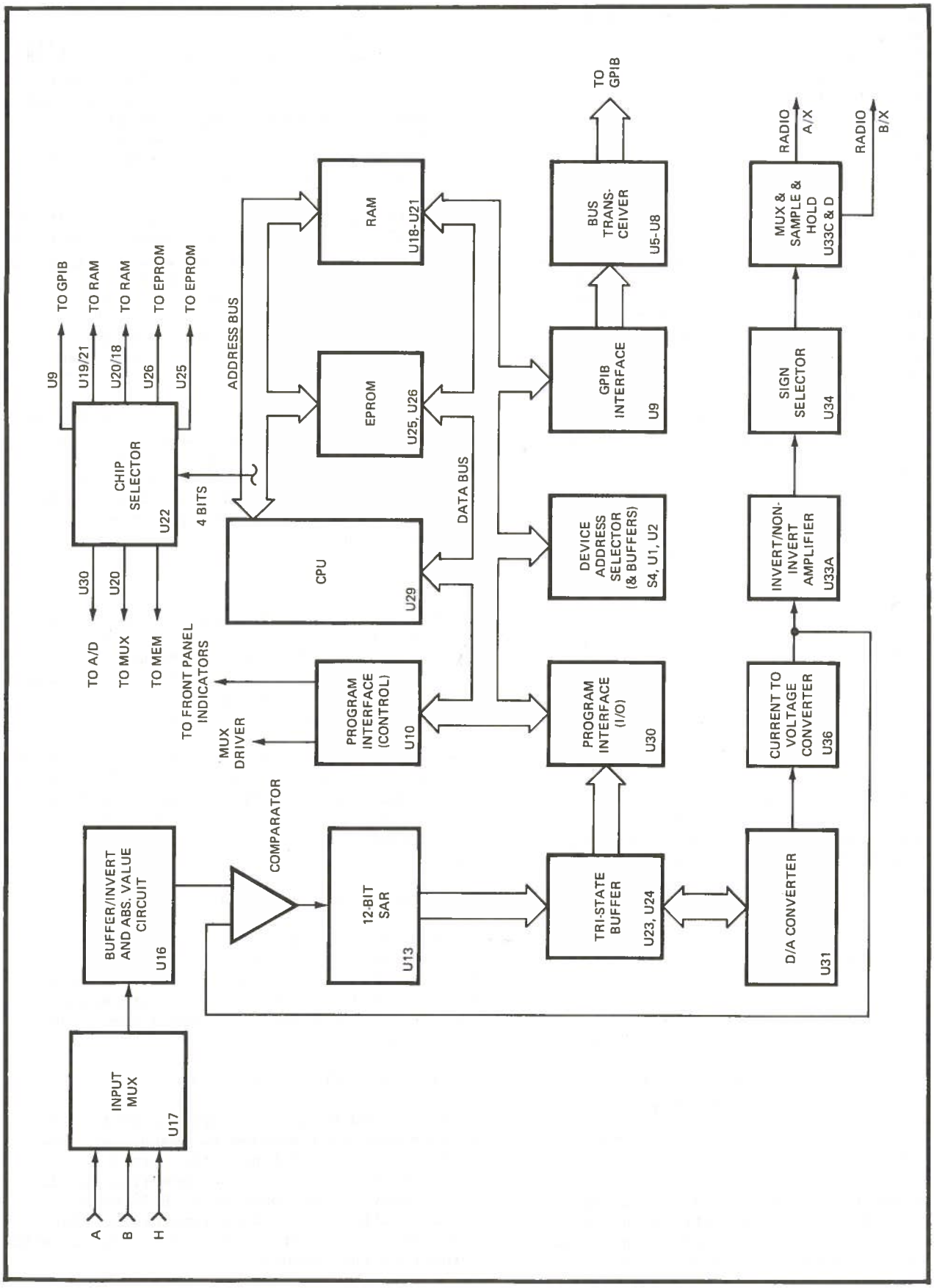

IEEE INTERFACE BOARD BLOCK DIAGRAM

FIGURE 7-2

amplifier U33B. The appropriate sign is decoded (from the thirteenth bit or MSB) by U35, which is an analog switch that selects either the inverting input or the output of amplifier U33B. Output multiplexer U34, which is controlled by the CPU (via U10) drives sample and hold U33C or U33D to furnish ratio A or B data when data is being transmitted. These outputs are held at zero when data is being received at U17.

7.4.2 PROGRAMMABLE INTERFACE

The 8255A devices at U30 and U10 are Programmable Peripheral Interface circuits operating under control of the CPU. They each provide 24 I/O pins organized in 3 ports: Port A, B, and C. The latter (Port C) can be used for control function implementation. A tri-state bi-directional 8-bit buffer is provided internally to interface the device to the system data bus. The system software programs the functional configuration of each port when the CPU outputs a control word to the 8255A. Pins 8 and 9 (AØ and A1) control the input or output mode of Port A, B, or C according to the state of the $\overline{RD}$ and $\overline{WR}$ lines (pins 5 and 36). Data (or status information) is sent to the CPU from the selected port (determined by AØ and A1 bits) when $\overline{RD}$ is true. When $\overline{WR}$ is true, the direction of data exchange is reversed.

The 13 bits of digitized input or output signal are coupled to the CPU by Port A (8 bits) and Port B (5 bits) of U30. Port C controls logic to drive SAR device U13. When U30 is in output mode, data from the CPU programs U31 D/A; but in the input mode the SAR output from U13 becomes the data source. Device U10 controls the input multiplexer (U17) and output multiplexer (U34) via its B Port. The control of buffers U23 and U24 is also from the B Port. Port C controls status indicators for Talker Active, Listener Active, Service Request, etc. It also provides 4 bits to data bus Ø through 3. Both devices U30 and U10 communicate with the CPU on the 8-bit system data bus.

7.4.3 CENTRAL PROCESSOR UNIT

Model Z80-CPU is a monolithic 8-bit microprocessor serving as the heart of the interface control system. Software resides in U25 and U26, which together form a 4K x 8-bit array of UV Erasable PROM memory. Random Access Memory (RAM) is provided by U18 through U21, which form two 1K x 8-bit storage arrays. A clock circuit comprised of U27 and associated components provides the basic timing for the CPU.

A general purpose interface adapter U9 (8291, GPIB Talker/Listener), communicates with the microprocessor data bus. The connection is via the processor system data bus which is distributed to the memory board, the programmable Interface, firmware, and RAM circuitry as well A 10-bit address bus is also connected to all memory elements on the IEEE Interface Board.

The 8291 communicates with the Controller via bi-directional bus transceivers U5 through U8. Signal lines IBØ-IB7 provide for the flow of seven bit ASCII (typically) interface messages (and device dependent messages) in bit-parallel, byte-serial fashion; an additional 8 lines provide for general bus interface management and data byte transfer control.

The Controller sets the attention line (ATN at pin 11 of J21) true when bus commands are to be transmitted to the Talker/Listener. This disables current talkers and listeners and frees the signal lines IBØ through IB7. When information is to be exchanged on the bus data lines, a three-sequence protocol or "handshake" is established on byte transfer lines NDAC, NRFD, and $\overline{DAV}$.

The Talker/Listener U9 stores the 1038-D14 device select address as programmed by the user at switch S4. When the remote controller selects the 1038-D14 for data exchange, the transceivers U5 through U8 are configured for listening or talking according to the mode requested by the controller.

7.4.4 OTHER CIRCUITS

Crystal clock oscillator U38 furnishes 16MHz reference to binary counter U27, to derive a 2MHz clock input for the Z80 CPU and the U9 device. A 1MHz output is furnished to U4A, which is divided by 2 to generate the conversion cycle clock frequency of 500kHz.

The purpose of U22 octal decoder is to read the most significant nibble (bits A12-A15) of the 16-bit address line. The decoder selects a CPU peripheral, either the EPROMs, RAMs, the Programmable Interfaces or the U9 Talker/Listener.

7.5 MODEL 1038-D14 SOFTWARE

The remotely programmable functions of the 1038-D14 may be divided into two major groups: those related to the processed display data, and those related to the unprocessed measurement data. There are also some miscellaneous functions.

7.5.1 PROCESSED DISPLAY DATA

Channel A and B data is displayed on the CRT with respect to a horizontal sweep. At slow sweep rates (for instance) the signals may be refreshed at a flicker-free rate from the display memory A6 (not part of IEEE Interface) The Controller can execute remotely all functions that an operator can perform locally with respect to this memory:

read memory contents

- write data into memory
- select or de-select MEMORY ON
- select or de-select SAVE

As an example of a typical Controller-executed function, the 1038-D14 can be programmed to replot measurement data after it has been processed by the Controller.

The remote programming codes and data formats for processed or refresh display memory functions are listed in Table 7-1.

TABLE 7-1 REFRESH DISPLAY FUNCTIONS

CODE	DISPLAY FUNCTION	DESCRIPTION
DA	Read Display, Channel A	Read display memory, Channel A, 512 points, and store in interface memory. Five-hundred points are within the graticule.
DB	Read Display, Channel B	Read display memory, Channel B, 512 points, and store in interface memory. Five-hundred points are within the graticule.
DC[1,2]	Write Display, Channel A	Write to interface memory at ±XX.XX horizontal divisions, a vertical value of ±Y.YY divisions.
DD[1,2]	Write Display, Channel B	Write to interface memory at ±XX.XX horizontal divisions, a vertical value of ±Y.YY divisions.
DL	Display Load	Loads display memory from interface memory data as stored by "DC" and "DD" commands.
DS	Display Save	Save display memory (disable update)
DU	Display Update	Enable display memory update
DM	Display Memory	Memory on-enable display memory
DR	Display Real Time	Memory off-disable display memory
DV[1]	Display Value	Returns display memory value at ±XX.XX horizontal divisions as stored in interface memory by "DA", "DB", "DC", or "DD" command. Format is ±Y.YY vertical divisions followed by "CRLF". ±XX.XX ranges from -.12 to +10.00 divisions. 50 points/division resolution. ±Y.YY ranges from 4.38 to +4.38 divisions. Approximately 30 points/division resolution.

NOTES: 1) Enter ±XX.XX and ±Y.YY with code.

2) Enter ±XX.XX with code.

7.5.2 MEASURED PLUG-IN DATA

Channel A and B vertical data and horizontal data are available directly as outputs of the 1038-D14 system plug-ins. The Controller can read this data with .01 dB resolution and can program vertical data to the same resolution. Thus, the Controller can send theoretical reference data (e.g.) to the plug-ins, for ratio summing with raw measured data via the interface memory.

Another typical Controller-executed function is the stepped CW measurement mode, in which a programmable sweeper is indexed to the desired frequency, the measurement is delayed (to allow system to settle), and the data is read from the 1038-D14. Since the 1038-D14 can measure horizontal sweep position, the mode described is only desirable when very precise frequency versus data correspondence is required.

The remote programming codes and data formats for measured plug-in data or direct channel functions are listed in Table 7-2.

TABLE 7-2 DIRECT CHANNEL FUNCTIONS

CODE	PLUG-IN FUNCTION	DESCRIPTION
RA	Read A Channel Output	Read A output, 512 points and store in interface memory.
RB	Read B Channel Output	Read B output, 512 points and store in interface memory.
RC[1,2]	Write Ratio A	Write ratio input ±YY.YYdB at ±XX.XX horizontal divisions. Store data in interface memory.
RE	Read Horizontal, Channel A, Channel B	Read Horizontal, A output, and B output, 1 data point each, separated by "," and followed by "CRLF". Format is ±YY.YYdB.
RH	Ratio Channel A	Ratio A Channel measurements to the data stored by "RC" command.
RJ	Ratio Channel B	Ratio Channel B measurements to the data stored by "RC" command.
RD	Ratio (disable)	Disable ratio activity of "RH" or "RJ"
RV[1]	Ratio Value	Return plug-in ratio value at ±XX.XX horizontal divisions as stored in interface memory by "RA", "RB", or "RC", command. Format is ±YY.YYdB followed by "CRLF". ±XX.XX ranges from -.12 to +10.10. ±YY.YY ranges from +20.95 to -60.95dB.

NOTES: 1) Enter ±XX.XX and ±Y.YY with code.

2) Enter ±XX.XX with code.

7.5.3 MISCELLANEOUS FUNCTIONS

The service request function, for which the code SE provides an SRQ enable and SD provides an SRQ disable. Several calibration functions include the following:

- CA -- Reads A Channel data
- CB -- Reads B Channel data
- CH -- Reads H Channel data
- CZ -- Cal zero: for setting R43, R60 R68
- CF -- Cal full scale: for setting R34, R61
- CG -- Cal gain: for setting output R56

Refer to paragraph 7.6.1 for these codes.

7.6 MAINTENANCE AND CALIBRATION

No special preventive maintenance routines are required for the IEEE Interface Board, but a number of variable resistors can be adjusted to calibrate the circuit to the measurement system. The test equipment required includes a DVM and a precision power supply.

7.6.1 CALIBRATION PROCEDURE

Several software routines have been designed to exercise the 1038-D14 in a calibration mode.

NOTE

The nature of the control elements requires that the alignment follow the sequence given below.

7.6.1.1 ZERO SET ADJUSTMENTS

Step 1: Provide for the command CZ to be issued by the Controller, which sets up the D/A converter for zero alignment.

Step 2: Adjust A10R43 for 0V±1mV across A10-TP1013 and A10TP1016.

Step 3: Adjust A10R60 for 0V±1mV across A10-TP1012 and A10TP1016.

Step 4: Adjust A10R68 for 2V±1mV across A10-TP1011 and A10TP1025.

7.6.1.2 FULL SCALE ADJUSTMENTS

Step 1: Provide for the command CF to be issued by the Controller.

Step 2: Adjust A10R34 for 10.2375V±1mV across A10TP1013 and A10TP1016.

Step 3: Adjust A10R61 for -2.095V±1mV across A10TP1011 and A10TP1025.

7.6.1.3 OUTPUT GAIN ADJUSTMENTS

Step 1: Provide for the command CG to be issued by the Controller.

Step 2: Adjust A10R56 for 6.095V±1mV across A10TP1011 and A10TP25.

7.6.1.4 A/D CONVERTER ADJUSTMENTS

Step 1: Using the 1038-D14 A Channel offset control, adjust the plug-in to a voltage of 1.980V±10mV across A10TP1003 and A10TP1025.

NOTE

1.980 volts corresponds to 19.80dB on the display.

Step 2: Provide for the command CA to be issued by the Controller. Read the dB level measured on the Controller display.

Step 3: If value is not within ±.01dB of -19.90dB, adjust A10R12 (-IN) and issue CA command again. Repeat as required.

Step 4: Re-adjust plug-in for 2.010V (-20.10dB) across A10TP1003 and A10TP1025.

Step 5: Issue CA command and read the dB level. If not -20.10dB±.01dB perform Step 6.

Step 6: Adjust A10R13 (+IN) and issue CA command again. Repeat as required.

Step 7: Re-adjust plug-in for -2.000V across A10TP1003 and A10TP1025 (or +20.00dB on display).

Step 8: Issue CA command and read the dB level. If not +20.00dB±.01dB, perform Step 9.

Step 9: Adjust A10R18 and issue CA command again. Repeat as required.

Step 10: Re-adjust plug-in for 6.000V across A10TP1003 and A10TP1025 (or -60.00dB on display).

Step 11: Issue CA command and read the dB level. If not -60.00dB±.01dB perform Step 12.

Step 12: Adjust A10R20 and issue CA command again. Repeat as required.

7.6.1.5 HORIZONTAL ADJUSTMENTS

Step 1: Remove horizontal plug-in.

Step 2: Connect a precision power supply set for -0.250V across A10TP1005 and A10TP1025.

Step 3: Provide for the command CH to be issued by the Controller.

Step 4: Adjust A10R92 for 0.00±.01 on Controller display. Repeat Steps 3 and 4 as required.

SECTION 8

BLOCK AND SCHEMATIC DIAGRAMS

Block and Schematic diagrams in this section are filed in the order of their drawing numbers.

Reference Designator		Drawing Number	Page Number
---	1038-D14 DISPLAY	14619	8-3
A1	INTERFACE CKT	14102	8-5
A2	INTERCONNECT	14619	8-3
A3	POWER SUPPLY	14127	8-7
A4	DEFLECTION CIRCUIT	14088	8-11
A5	HIGH VOLTAGE SUPPLY	14096	8-9
A6	MEMORY BOARD (2 SHEETS)	14215	8-13
A7	FRONT PANEL	14619	8-3
A8	IEEE INTERCONNECT	14619	8-3
A9	IEEE INDICATOR	14619	8-3
A10	IEEE INTERFACE BUS (2 SHEETS)	14181	8-17

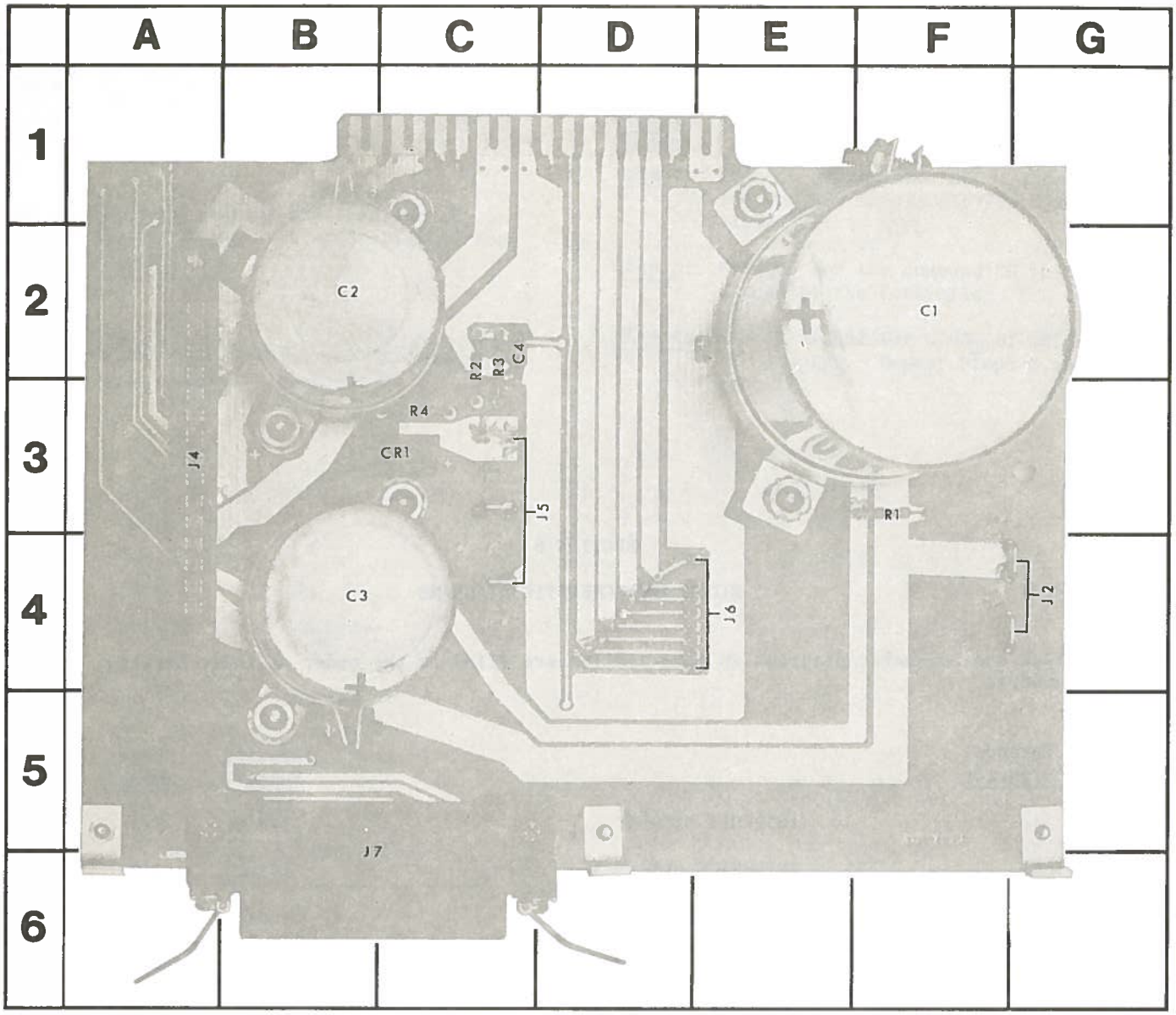

FIGURE 8-1 INTERCONNECT PCB ASSEMBLY

CKT REF	GRID LOC	CKT REF	GRID LOC	CKT REF	GRID LOC	CKT REF	GRID LOC
C1	F-2	CR1	C-3	J1	---	R1	F-3
C2	C-2			J2	G-4	R2	C-2
C3	C-4			J3	---	R3	D-2
C4	D-2			J4	B-3	R4	C-3
				J5	D-4		
				J6	E-4		
				J7	C-5		

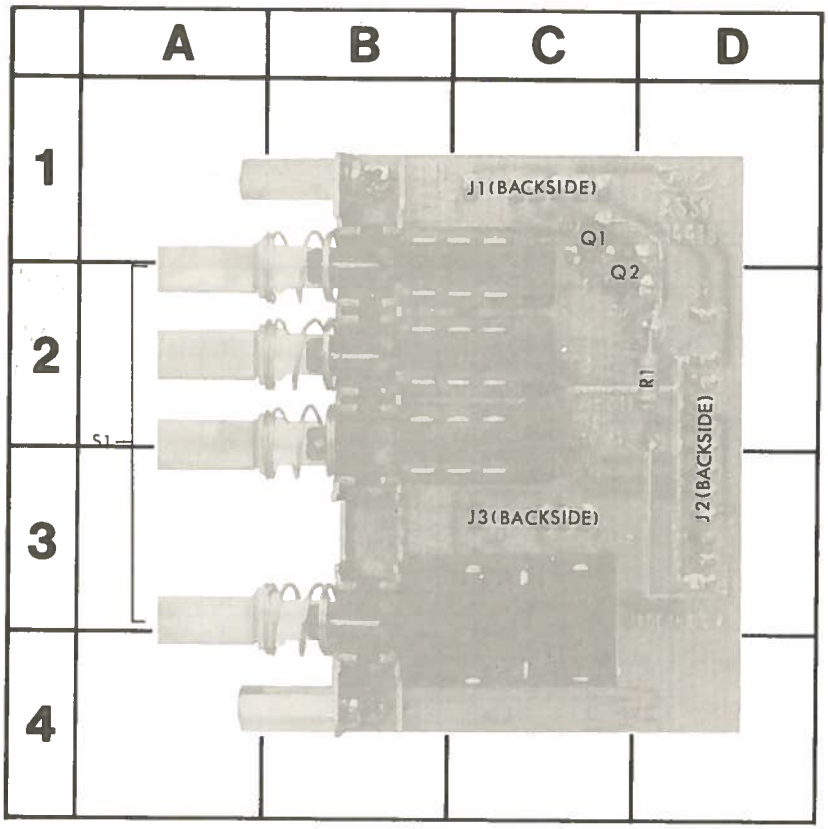

CKT REF	GRID LOC
J1	C-1
J2	D-2
J3	C-3
Q1	C-1
Q2	C-2
R1	D-2
S1	A-2

FIGURE 8-2 FRONT PANEL PCB ASSEMBLY

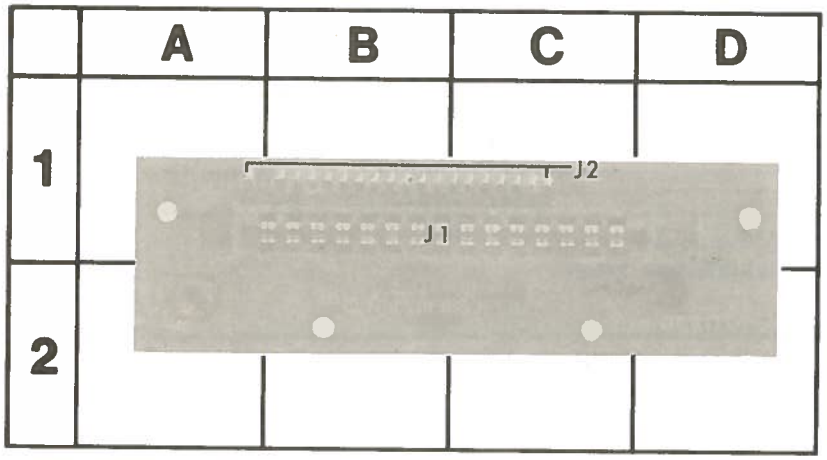

FIGURE 8-3 IEEE INTERCONNECT PCB ASSEMBLY

CKT REF	GRID LOC
J1	B-1
J2	B-1

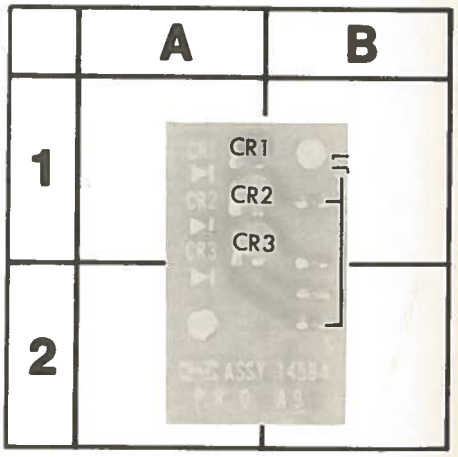

FIGURE 8-4 INDICATOR PCB ASSEMBLY

CKT REF	GRID LOC	CKT REF	GRID LOC
CR1	A-1	CR3	A-1
CR2	A-1	J1	B-1

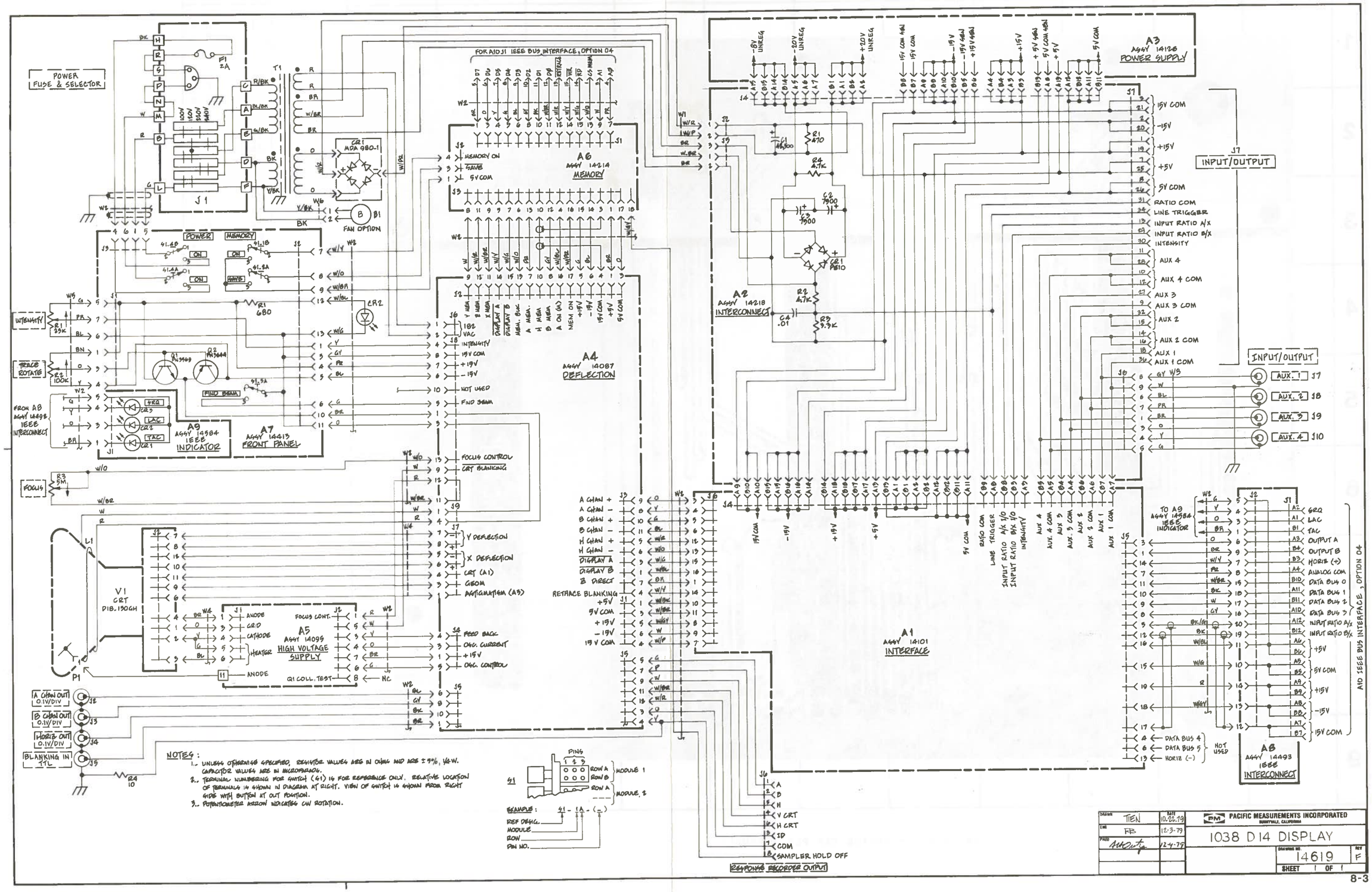

NOTES:

1.. UNLESS OTHERWISE SPECIFIED, RESISTOR VALUES ARE IN OHMS AND ARE ± 5%, ½ W. CAPACITOR VALUES ARE IN MICROFARADS.

2.. TERMINAL NUMBERING FOR SWITCH (S1) IS FOR REFERENCE ONLY. RELATIVE LOCATION OF TERMINALS IS SHOWN IN DIAGRAM AT RIGHT. VIEW OF SWITCH IS SHOWN FROM RIGHT SIDE WITH BUTTON AT OUT POSITION.

3.. POTENTIOMETER ARROW INDICATES CW ROTATION.

DRAWN TIEN	DATE 10.22.79	PACIFIC MEASUREMENTS INCORPORATED SUNNYVALE, CALIFORNIA	
ENG FB	12-3-79	1038 D14 DISPLAY	
PROD	12-4-79	DRAWING NO. 14619	REV F
		SHEET 1 OF 1	

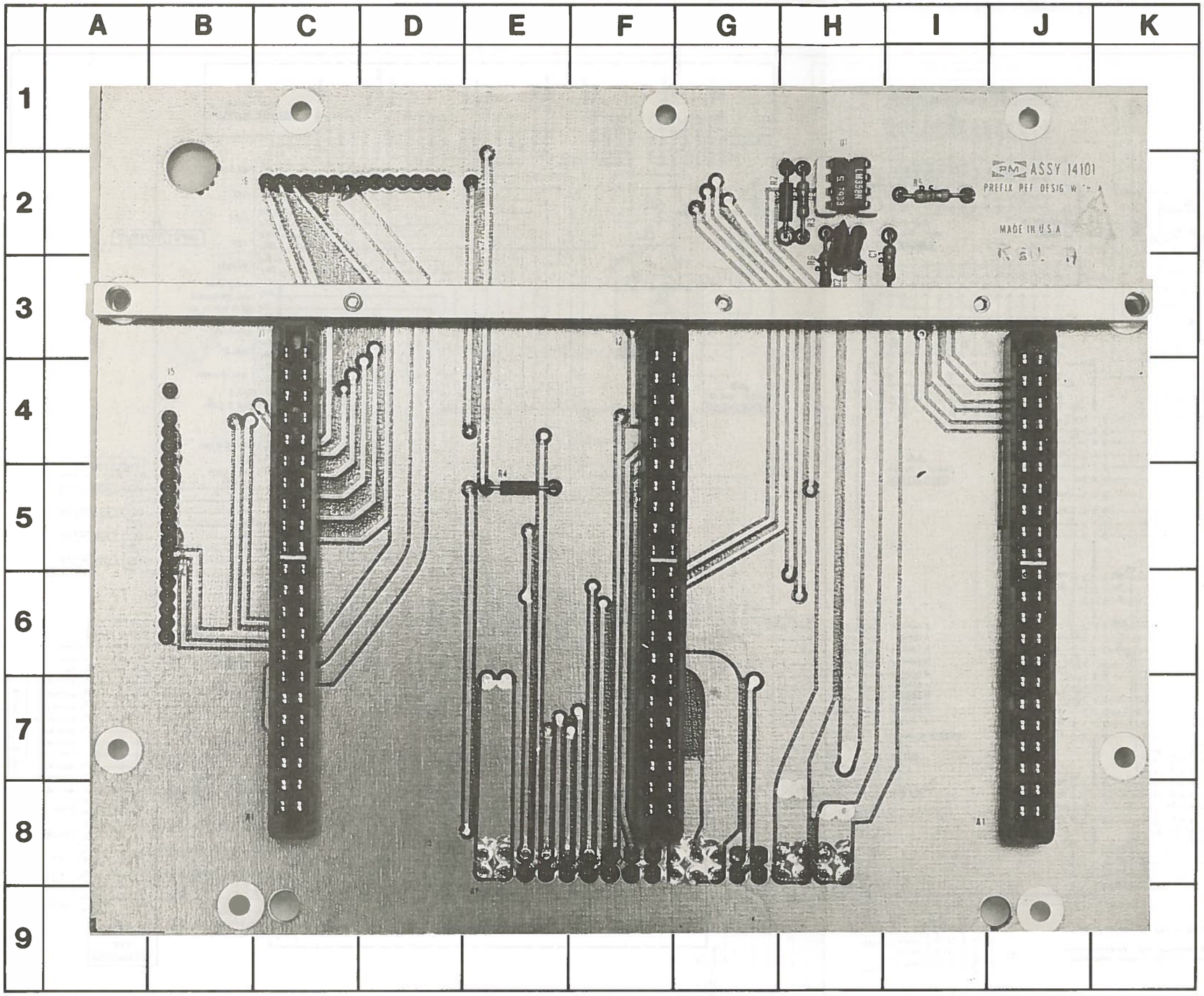

CKT REF	GRID LOC
C1	H-3
C2	H-3
J1	C-6
J2	F-6
J3	J-6
J4	E-8
J5	B-5
J6	C-2
R1	H-3
R2	G-2
R3	H-2
R4	E-5
R5	I-2
R6	H-3
U1	H-2

FIGURE 8-5 INTERFACE CKT PCB ASSEMBLY

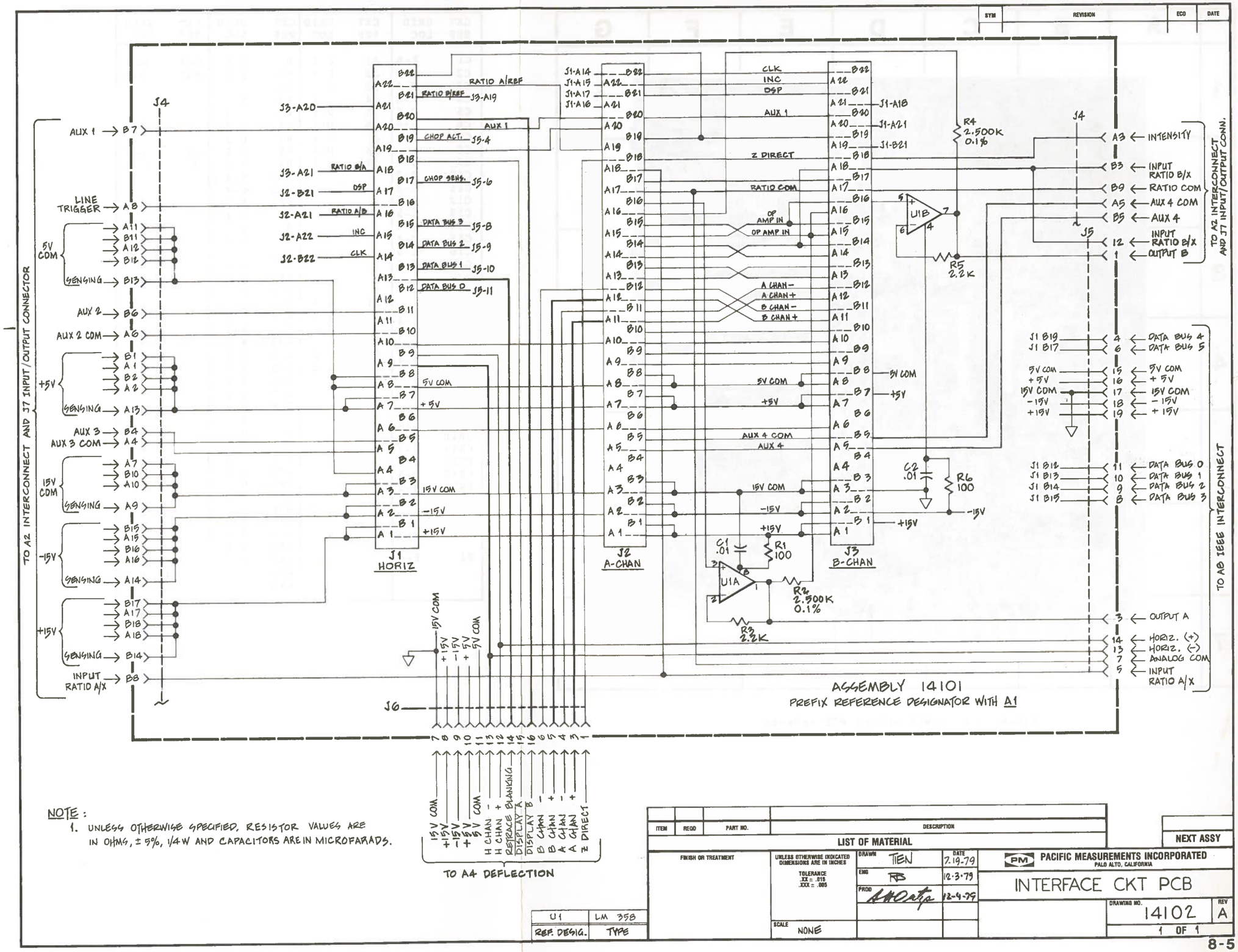

NOTE:

1. UNLESS OTHERWISE SPECIFIED, RESISTOR VALUES ARE IN OHMS, ± 5%, 1/4 W AND CAPACITORS ARE IN MICROFARADS.

REF. DESIG.	TYPE
U1	LM 358

ITEM	REQD	PART NO.	DESCRIPTION

LIST OF MATERIAL

NEXT ASSY

FINISH OR TREATMENT

UNLESS OTHERWISE INDICATED DIMENSIONS ARE IN INCHES
TOLERANCE .XX ± .015 .XXX ± .005

SCALE NONE

DRAWN	TIEN	7.19.79
ENG	RB	12.3.79
PROD	AWOrtiz	12-4-79

PACIFIC MEASUREMENTS INCORPORATED
PALO ALTO, CALIFORNIA

INTERFACE CKT PCB

DRAWING NO. 14102 REV A

1 OF 1

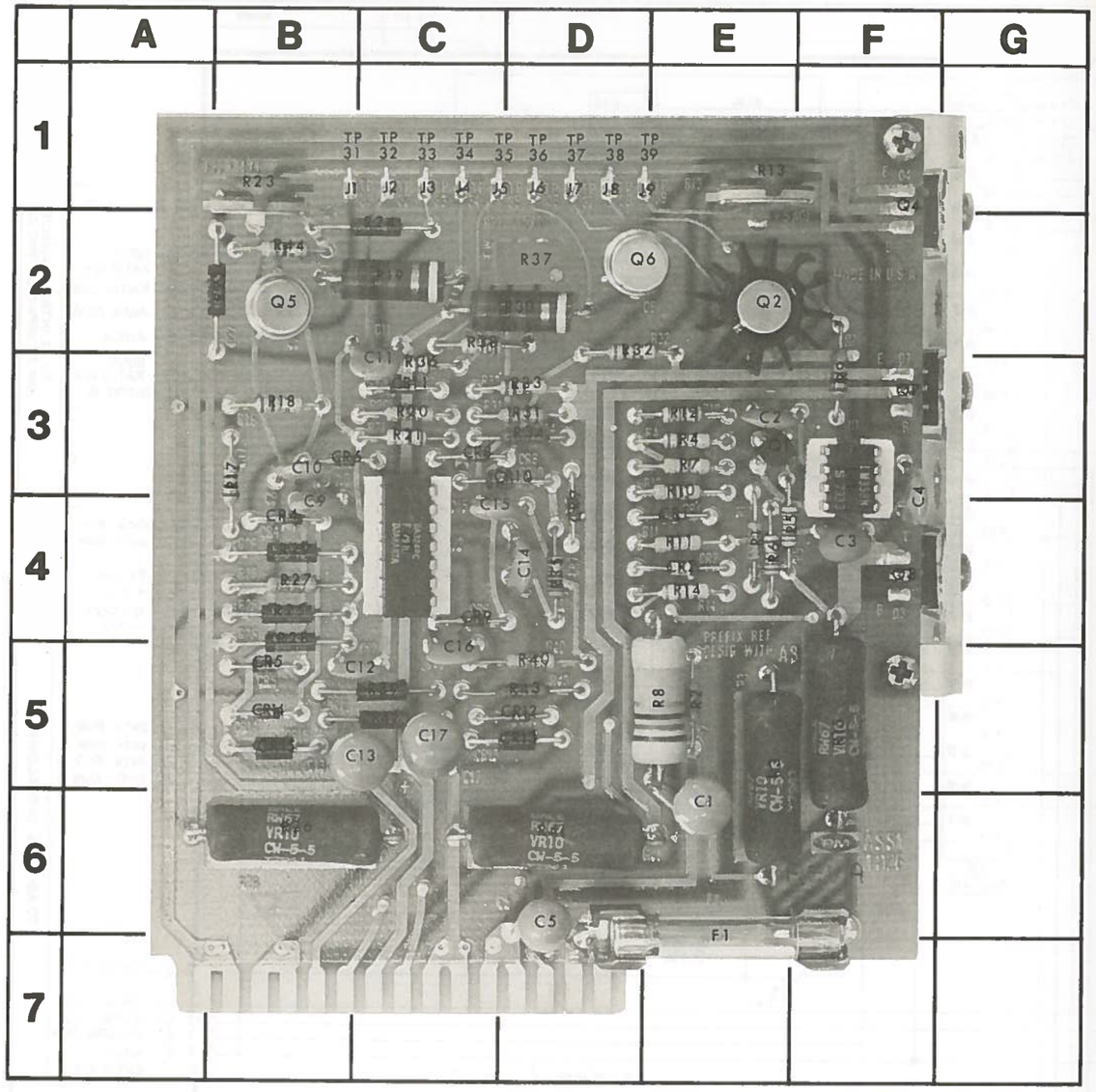

FIGURE 8-6 POWER SUPPLY PCB ASSEMBLY

CKT REF	GRID LOC	CKT REF	GRID LOC	CKT REF	GRID LOC	CKT REF	GRID LOC
C1	E-6	J1	C-1	R1	E-4	R43	D-5
C2	E-3	J2	C-1	R2	E-5	R44	B-2
C3	F-4	J3	C-1	R3	E-5		
C4	F-4	J4	C-1	R4	E-3		
C5	D-6	J5	D-1	R5	F-4		
C6	---	J6	D-1	R6	E-4		
C7	---	J7	D-1	R7	E-3		
C8	---	J8	D-1	R8	E-5	U1	F-3
C9	B-4	J9	E-1	R9	F-3	U2	C-4
C10	B-3			R10	E-4		
C11	C-3			R11	E-4		
C12	C-5			R12	E-3		
C13	C-5			R13	E-1		
C14	D-4			R14	E-4		
C15	D-4			R15	F-5		
C16	C-5			R16	---		
C17	C-5			R17	B-3		
				R18	B-3		
				R19	C-2		
		Q1	E-3	R20	C-3		
		Q2	E-2	R21	C-3		
CR1	E-4	Q3	F-4	R22	B-2		
CR2	E-4	Q4	F-2	R23	B-2		
CR3	---	Q5	B-2	R24	C-2		
CR4	B-4	Q6	D-2	R25	B-4		
CR5	B-5	Q7	F-3	R26	B-6		
CR6	C-3			R27	B-4		
CR7	D-4			R28	B-5		
CR8	C-3			R29	B-4		
CR9	C-4			R30	D-2		
CR10	D-3			R31	D-3		
CR11	C-3			R32	D-3		
CR12	D-5			R33	D-3		
CR13	D-5			R34	D-3		
CR14	B-5			R35	D-4		
CR15	B-5			R36	C-3		
				R37	D-2		
				R38	C-3		
				R39	C-5		
F1	E-6			R40	D-5		
				R41	D-6		
				R42	C-5		

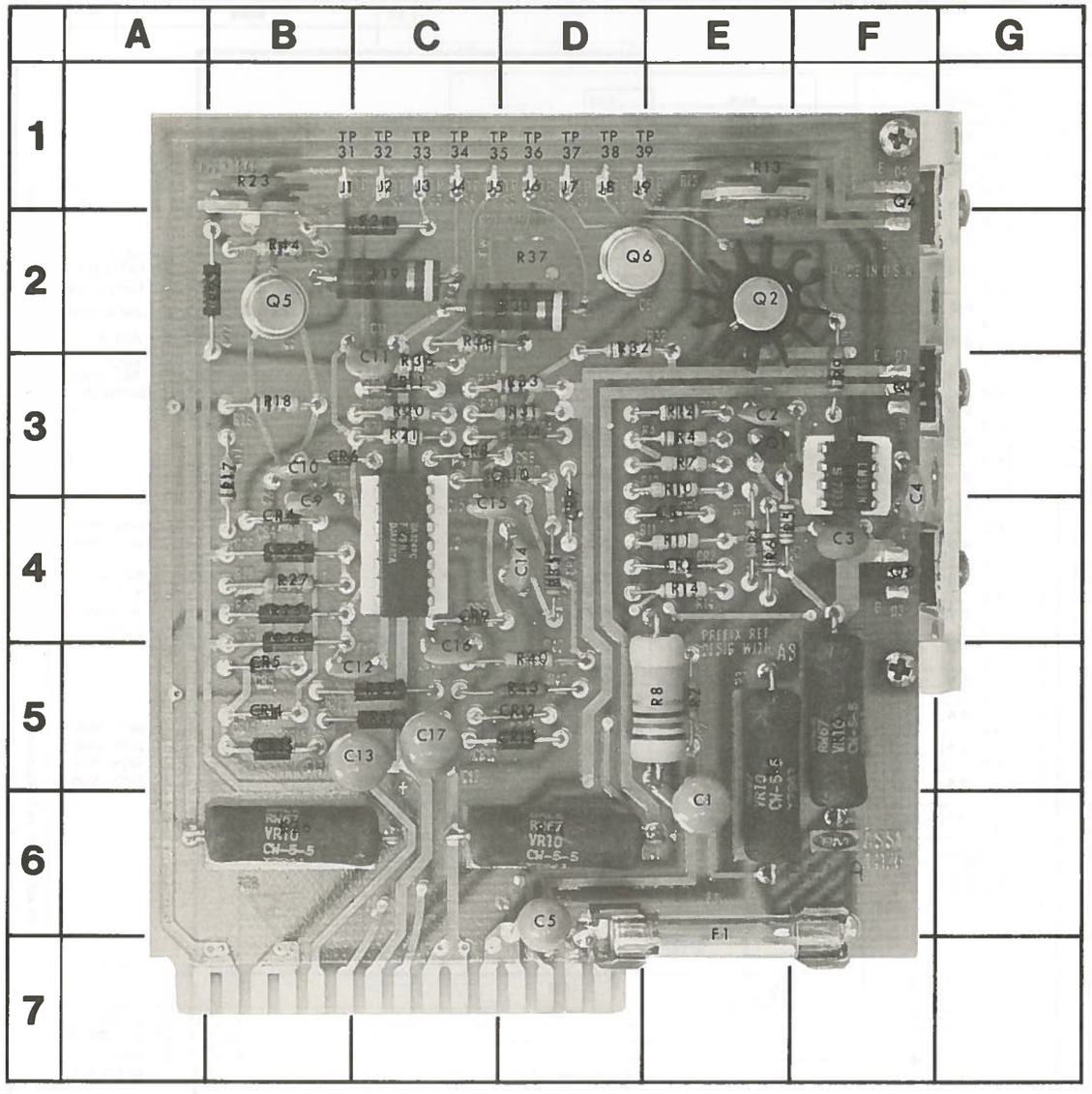

FIGURE 8-6 POWER SUPPLY PCB ASSEMBLY

CKT REF	GRID LOC	CKT REF	GRID LOC	CKT REF	GRID LOC	CKT REF	GRID LOC
C1	E-6	J1	C-1	R1	E-4	R43	D-5
C2	E-3	J2	C-1	R2	E-5	R44	B-2
C3	F-4	J3	C-1	R3	E-5		
C4	F-4	J4	C-1	R4	E-3		
C5	D-6	J5	D-1	R5	F-4		
C6	---	J6	D-1	R6	E-4		
C7	---	J7	D-1	R7	E-3		
C8	---	J8	D-1	R8	E-5	U1	F-3
C9	B-4	J9	E-1	R9	F-3	U2	C-4
C10	B-3			R10	E-4		
C11	C-3			R11	E-4		
C12	C-5			R12	E-3		
C13	C-5			R13	E-1		
C14	D-4			R14	E-4		
C15	D-4			R15	F-5		
C16	C-5			R16	---		
C17	C-5			R17	B-3		
				R18	B-3		
				R19	C-2		
		Q1	E-3	R20	C-3		
		Q2	E-2	R21	C-3		
CR1	E-4	Q3	F-4	R22	B-2		
CR2	E-4	Q4	F-2	R23	B-2		
CR3	---	Q5	B-2	R24	C-2		
CR4	B-4	Q6	D-2	R25	B-4		
CR5	B-5	Q7	F-3	R26	B-6		
CR6	C-3			R27	B-4		
CR7	D-4			R28	B-5		
CR8	C-3			R29	B-4		
CR9	C-4			R30	D-2		
CR10	D-3			R31	D-3		
CR11	C-3			R32	D-3		
CR12	D-5			R33	D-3		
CR13	D-5			R34	D-3		
CR14	B-5			R35	D-4		
CR15	B-5			R36	C-3		
				R37	D-2		
				R38	C-3		
				R39	C-5		
F1	E-6			R40	D-5		
				R41	D-6		
				R42	C-5		

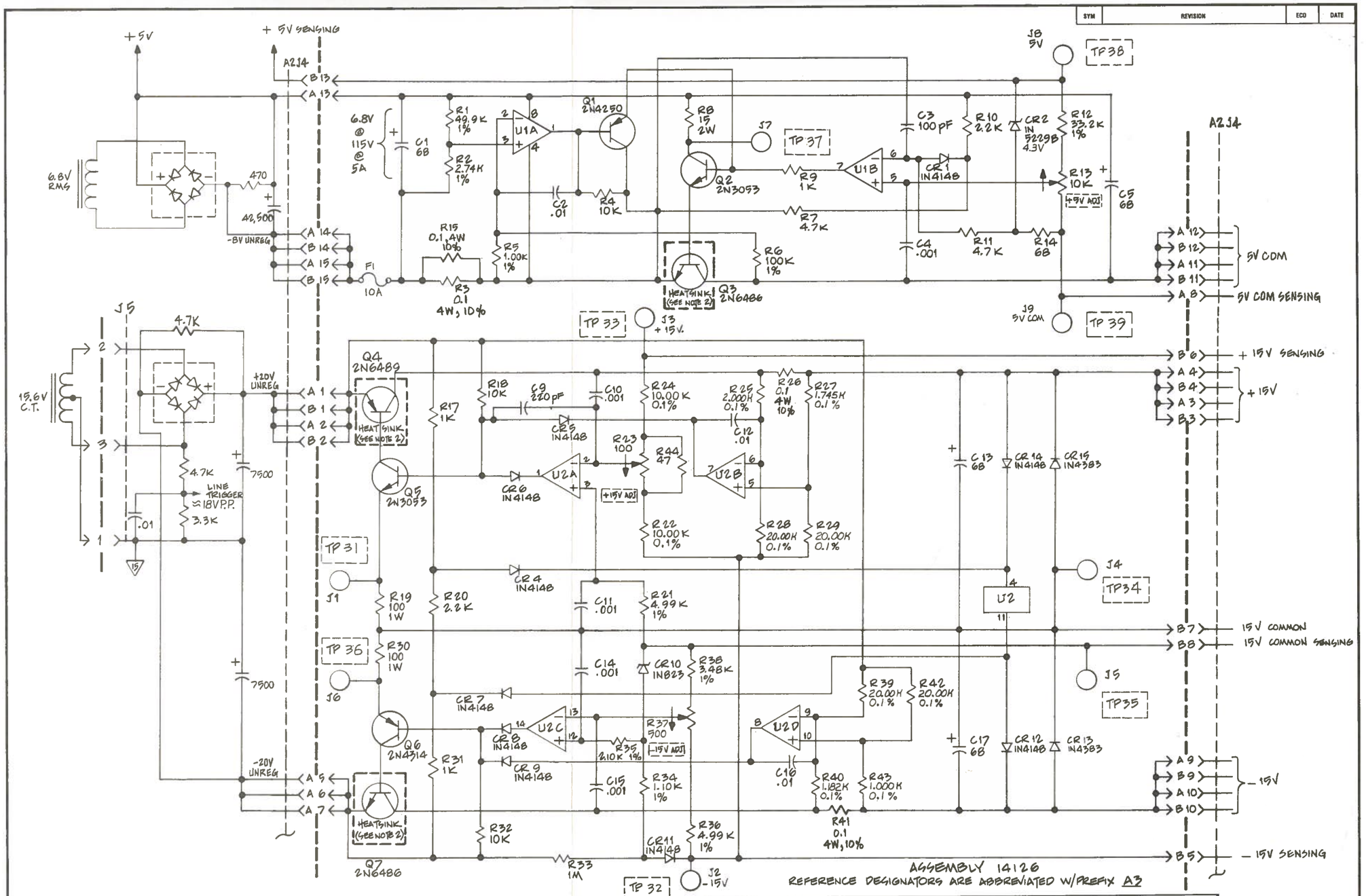

NOTES:

1. UNLESS OTHERWISE SPECIFIED, COMPONENT VALUES ARE AS FOLLOWS:
   - RESISTORS IN OHMS, ± 5%, 1/4 W.
   - CAPACITORS IN MICROFARADS.
2. TRANSISTORS ARE MOUNTED ON REAR PANEL HEATSINK.

REF DESIG	TYPE
U2	LM 324N
U1	LM 358N

SYM	REVISION	ECO	DATE

ITEM	REQD	PART NO.	DESCRIPTION

LIST OF MATERIAL

NEXT ASSY

FINISH OR TREATMENT

UNLESS OTHERWISE INDICATED DIMENSIONS ARE IN INCHES
TOLERANCE .XX = .015 .XXX = .005

SCALE NONE

		DATE
DRAWN	TIEN	7-2-79
ENG	RB	12-3-79
PROD	[illegible]	12-4-79

PACIFIC MEASUREMENTS INCORPORATED
PALO ALTO, CALIFORNIA

POWER SUPPLY

DRAWING NO. 14127 REV A

1 OF 1

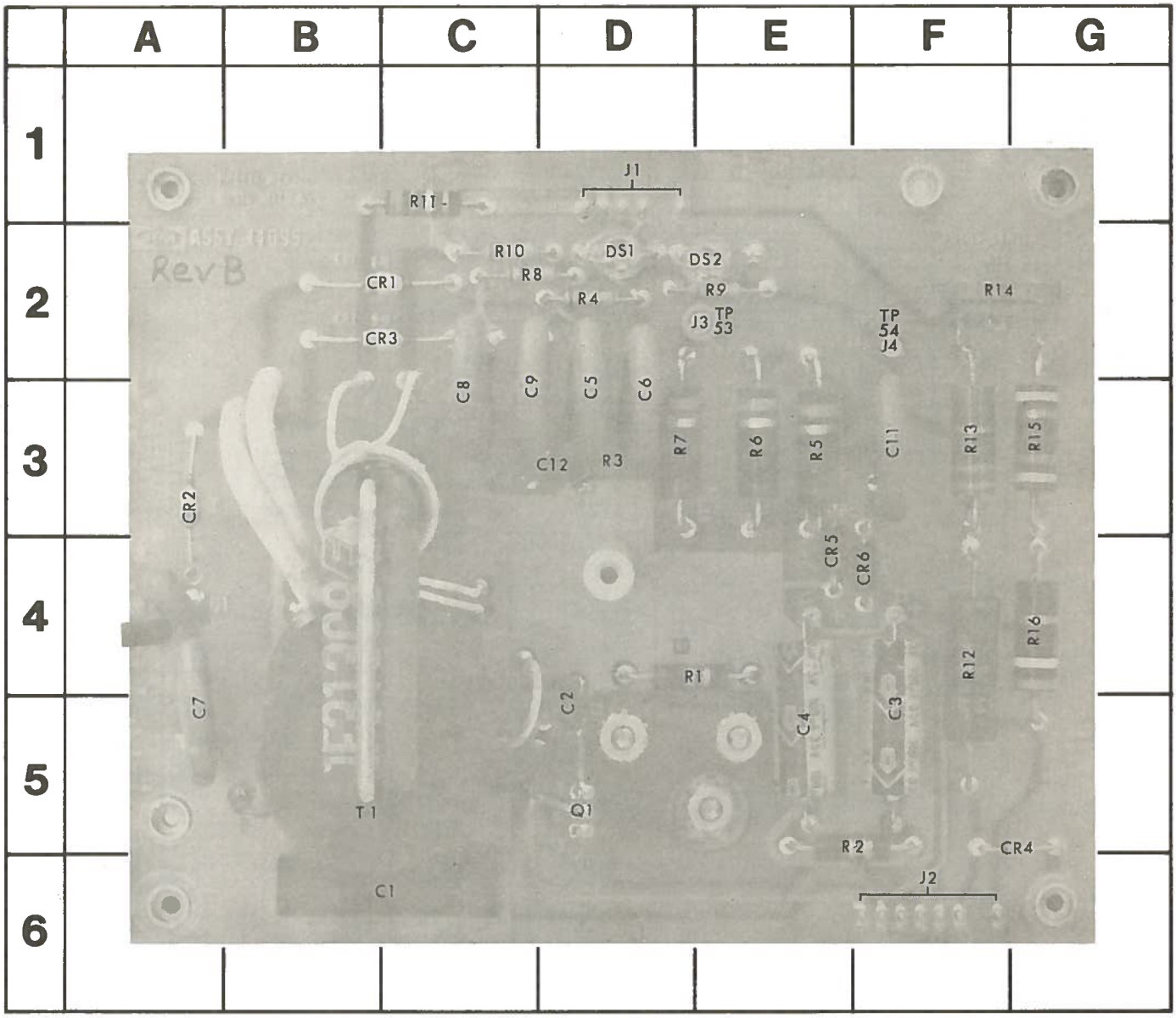

FIGURE 8-7 HIGH VOLTAGE PCB ASSEMBLY

CKT REF	GRID LOC	CKT REF	GRID LOC	CKT REF	GRID LOC	CKT REF	GRID LOC	CKT REF	GRID LOC	CKT REF	GRID LOC	CKT REF	GRID LOC
C1	C-6	CR1	C-2	DS1	D-2	J1	D-1	R1	D-4	T1	B-5		
C2	D-4	CR2	A-3	DS2	E-2	J2	F-6	R2	E-5				
C3	F-4	CR3	C-2			J3	E-2	R3	D-3				
C4	E-4	CR4	F-5			J4	F-2	R4	D-2				
C5	D-2	CR5	E-3					R5	E-3				
C6	D-2	CR6	F-4					R6	E-3				
C7	A-4							R7	D-3				
C8	C-2							R8	C-2				
C9	D-2							R9	E-2				
C11	F-3							R10	C-2				
C12	D-3							R11	C-1				
								R12	F-4				
						Q1	D-5	R13	F-3				
								R14	F-2				
								R15	G-3				
								R16	G-4				

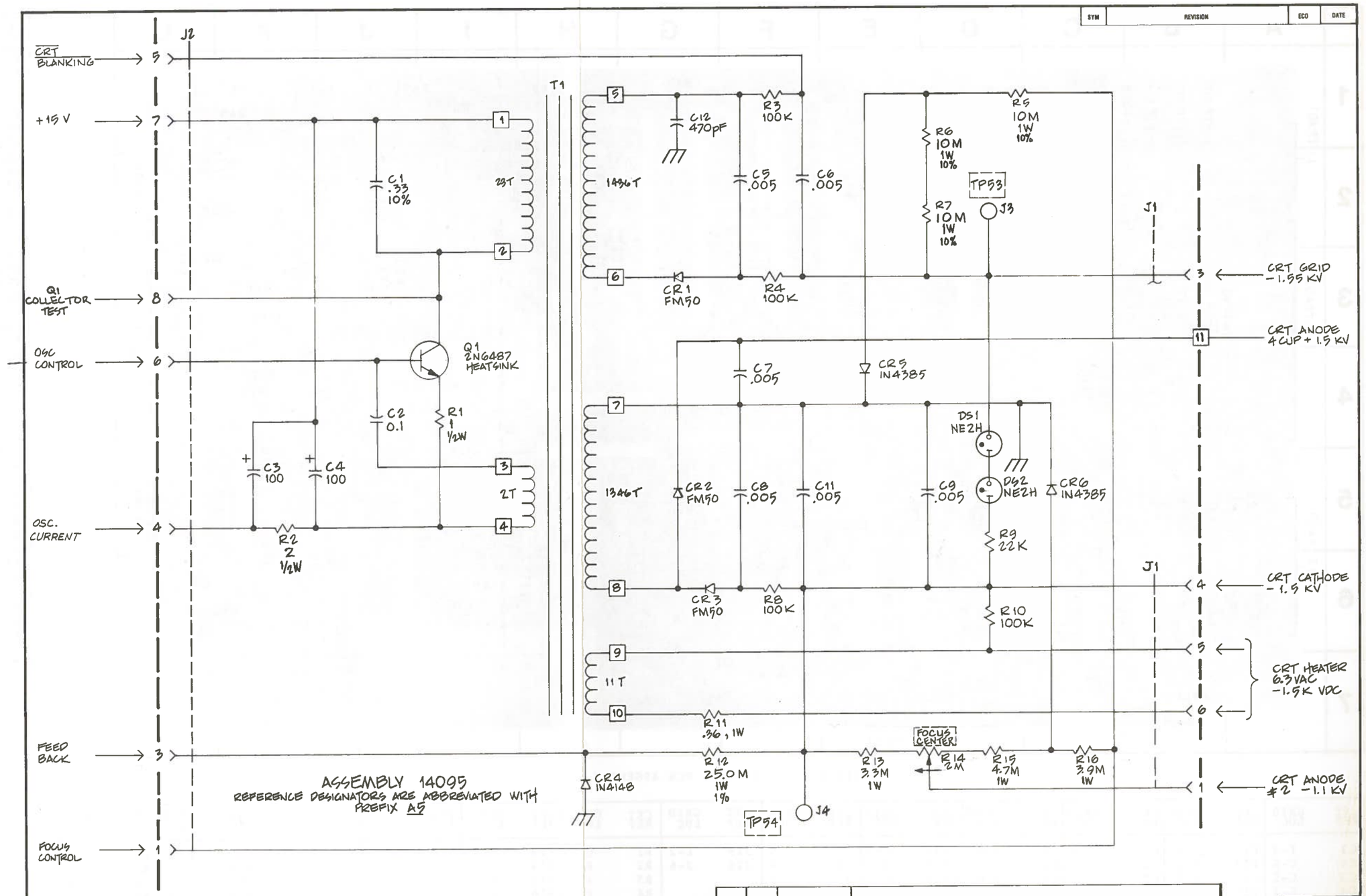

NOTES:

1.. UNLESS OTHERWISE SPECIFIED, COMPONENTS VALUES ARE AS FOLLOWS:
- RESISTORS IN OHMS, ± 9%, 1/4 W
- CAPACITORS IN MICROFARADS.

SYM	REVISION	ECO	DATE

ITEM	REQD	PART NO.	DESCRIPTION

LIST OF MATERIAL

NEXT ASSY

FINISH OR TREATMENT

UNLESS OTHERWISE INDICATED DIMENSIONS ARE IN INCHES
TOLERANCE .XX ± .015 .XXX ± .005

SCALE NONE

		DATE
DRAWN	TIEN	7.6.79
ENG	TB	12.3.79
PROD	AHOrtega	12-4-79

PM PACIFIC MEASUREMENTS INCORPORATED
PALO ALTO, CALIFORNIA

HIGH VOLTAGE SUPPLY

DRAWING NO. 14096 REV C

1 OF 1

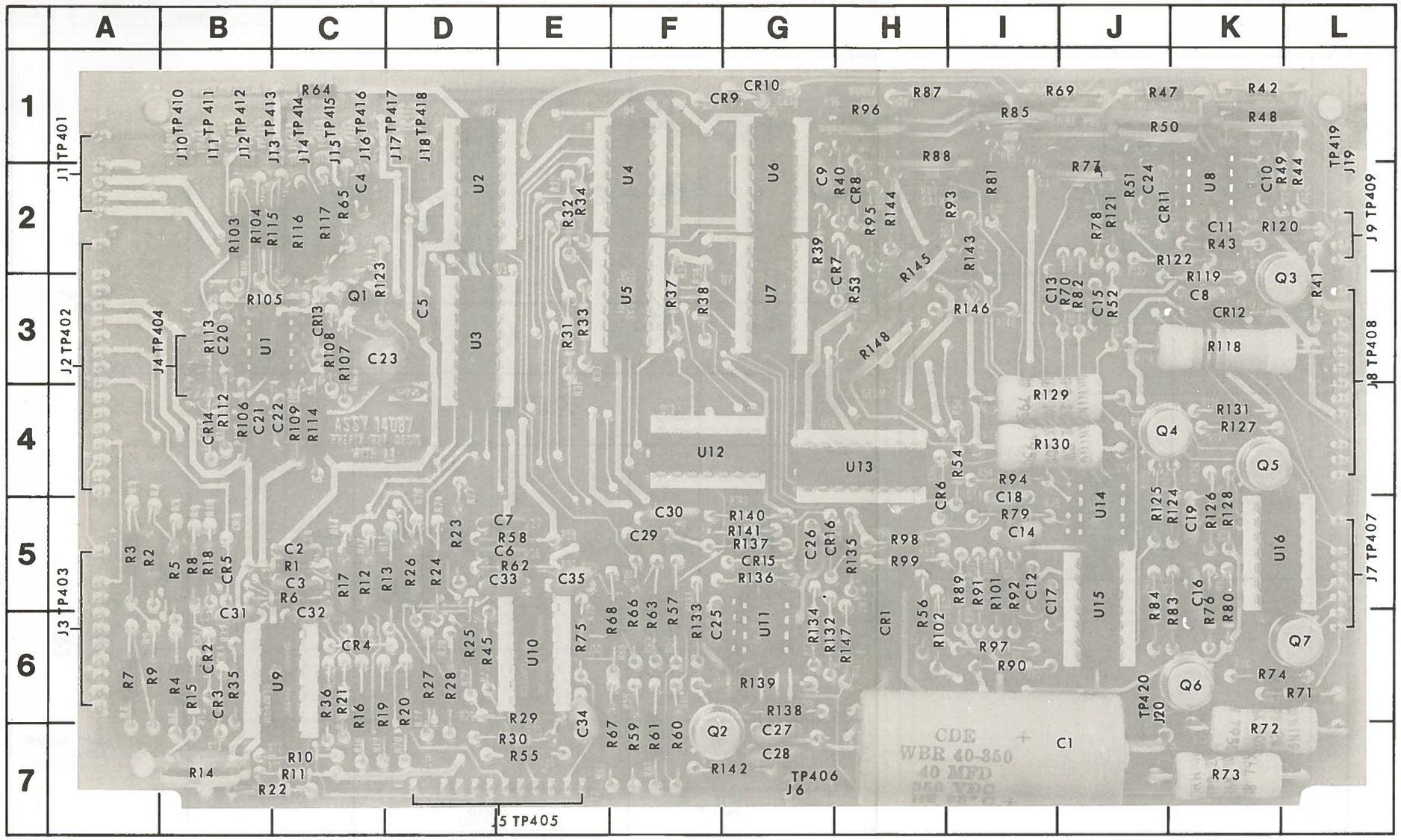

CKT REF	GRID LOC	CKT REF	GRID LOC
R73	K-7	R123	D-3
R74	K-6	R124	J-5
R75	E-6	R125	J-5
R76	K-6	R126	K-5
R77	J-2	R127	K-4
R78	J-2	R128	K-5
R79	I-5	R129	I-4
R80	K-6	R130	I-4
R81	I-2	R131	K-4
R82	J-3	R132	G-6
R83	J-5	R133	F-6
R84	J-5	R134	G-6
R85	I-1	R135	H-5
R86	---	R136	G-5
R87	H-1	R137	G-5
R88	H-2	R138	G-6
R89	I-5	R139	G-6
R90	I-6	R140	G-5
R91	I-5	R141	G-5
R92	I-5	R142	G-7
R93	H-2	R143	I-2
R94	I-4	R144	H-2
R95	H-2	R145	H-3
R96	H-1	R146	I-3
R97	I-6	R147	H-6
R98	H-5	R148	H-3
R99	H-5	R149	---
R100	---	R150	---
R101	I-5		
R102	H-6	U1	C-3
R103	B-2	U2	D-2
R104	B-2	U3	D-3
R105	C-3	U4	F-2
R106	B-4	U5	F-3
R107	C-3	U6	G-2
R108	C-3	U7	G-3
R109	C-4	U8	K-2
R110	---	U9	C-6
R111	---	U10	E-6
R112	B-4	U11	G-6
R113	B-3	U12	F-4
R114	C-4	U13	H-4
R115	C-2	U14	J-5
R116	C-2	U15	J-5
R117	C-2	U16	K-5
R118	K-3		
R119	K-3		
R120	K-2		
R121	J-2		
R122	J-2		

FIGURE 8-8 DEFLECTION PCB ASSEMBLY

CKT REF	GRID LOC	CKT REF	GRID LOC	CKT REF	GRID LOC	CKT REF	GRID LOC	CKT REF	GRID LOC	CKT REF	GRID LOC	CKT REF	GRID LOC	CKT REF	GRID LOC	CKT REF	GRID LOC	CKT REF	GRID LOC	CKT REF	GRID LOC	CKT REF	GRID LOC	CKT REF	GRID LOC
C1	I-7	C13	I-3	C25	F-6	CR1	H-6	CR13	C-3	J7	L-5	J19	L-2	R1	C-5	R13	D-5	R25	D-6	R37	F-3	R49	K-2	R61	F-7
C2	C-5	C14	I-5	C26	G-5	CR2	B-6	CR14	B-4	J8	L-4	J20	J-6	R2	B-5	R14	B-7	R26	D-5	R38	F-3	R50	J-1	R62	E-5
C3	C-5	C15	J-3	C27	G-7	CR3	B-6	CR15	G-5	J9	L-2			R3	A-5	R15	B-6	R27	D-6	R39	G-2	R51	J-2	R63	F-6
C4	C-2	C16	K-5	C28	G-7	CR4	C-6	CR16	G-5	J10	B-2			R4	B-6	R16	C-6	R28	D-6	R40	G-2	R52	J-3	R64	C-1
C5	D-3	C17	I-5	C29	F-5	CR5	B-5			J11	B-2	Q1	C-3	R5	B-5	R17	C-5	R29	E-6	R41	L-3	R53	H-3	R65	C-2
C6	E-5	C18	I-5	C30	F-5	CR6	H-5			J12	B-2	Q2	F-7	R6	C-5	R18	B-5	R30	E-7	R42	K-1	R54	H-4	R66	F-6
C7	E-5	C19	K-5	C31	B-6	CR7	G-3	J1	A-2	J13	C-2	Q3	K-3	R7	A-6	R19	D-6	R31	E-3	R43	K-2	R55	E-7	R67	F-7
C8	K-3	C20	B-3	C32	C-6	CR8	H-2	J2	A-3	J14	C-2	Q4	J-4	R8	B-5	R20	D-6	R32	E-2	R44	K-2	R56	H-6	R68	F-6
C9	G-2	C21	C-4	C33	E-5	CR9	G-1	J3	A-6	J15	C-2	Q5	K-4	R9	B-6	R21	C-6	R33	E-2	R45	D-6	R57	F-6	R69	I-1
C10	K-2	C22	C-4	C34	E-6	CR10	G-1	J4	B-3	J16	C-2	Q6	J-6	R10	C-7	R22	C-7	R34	E-2	R46	---	R58	E-5	R70	I-3
C11	K-2	C23	D-3	C35	E-5	CR11	J-2	J5	E-7	J17	D-2	Q7	K-6	R11	C-7	R23	D-5	R35	B-6	R47	J-1	R59	F-7	R71	K-6
C12	I-5	C24	J-2			CR12	K-3	J6	G-7	J18	D-2			R12	C-5	R24	D-5	R36	C-6	R48	K-1	R60	F-7	R72	K-7

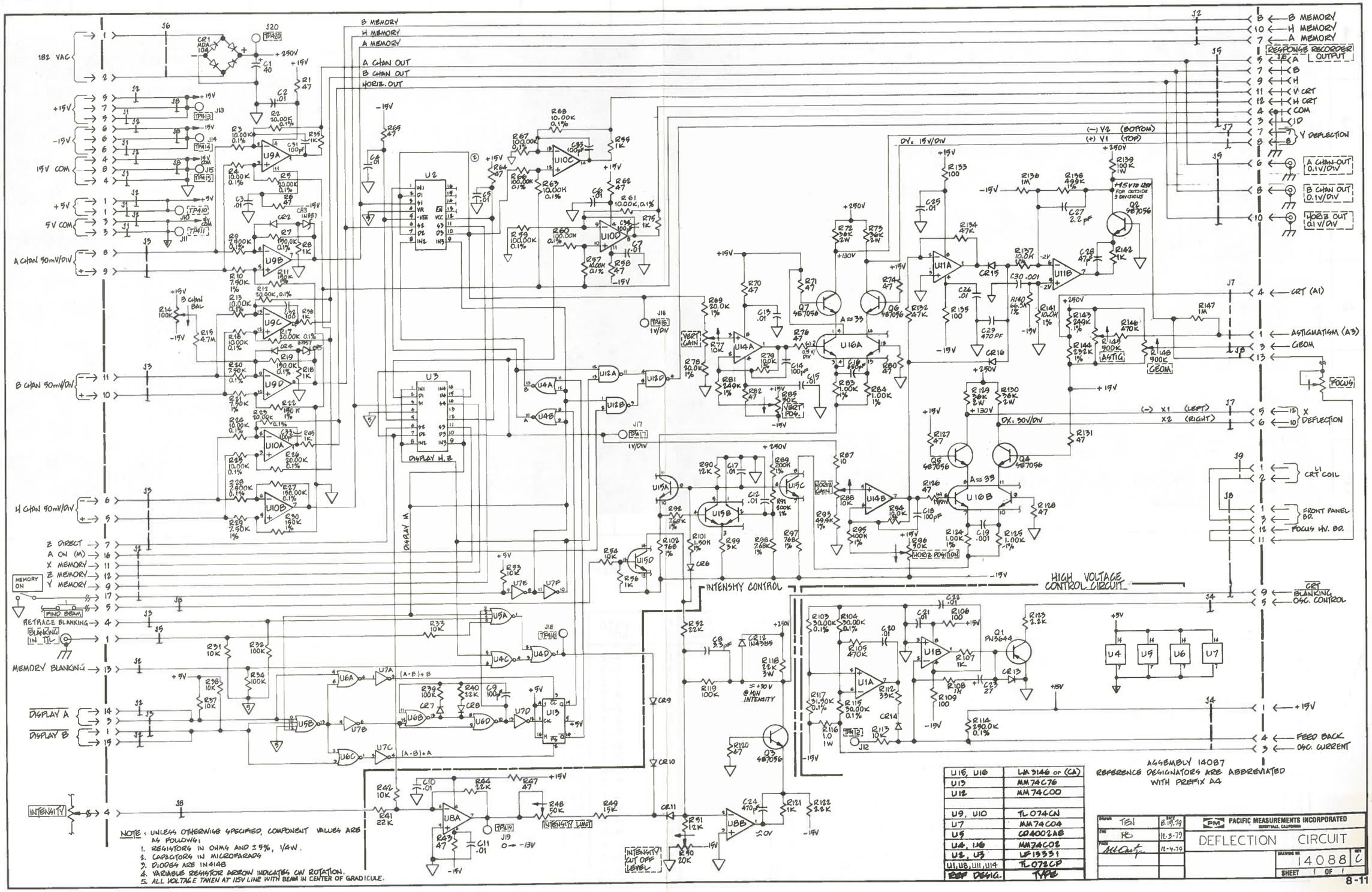

U15, U16	LM 3146 or (CA)
U13	MM74C76
U12	MM74C00
U9, U10	TL074CN
U7	MM74C04
U5	CD4002AE
U4, U6	MM74C02
U2, U3	LF13331
U1, U8, U11, U14	TL072CP
REF DESIG.	TYPE

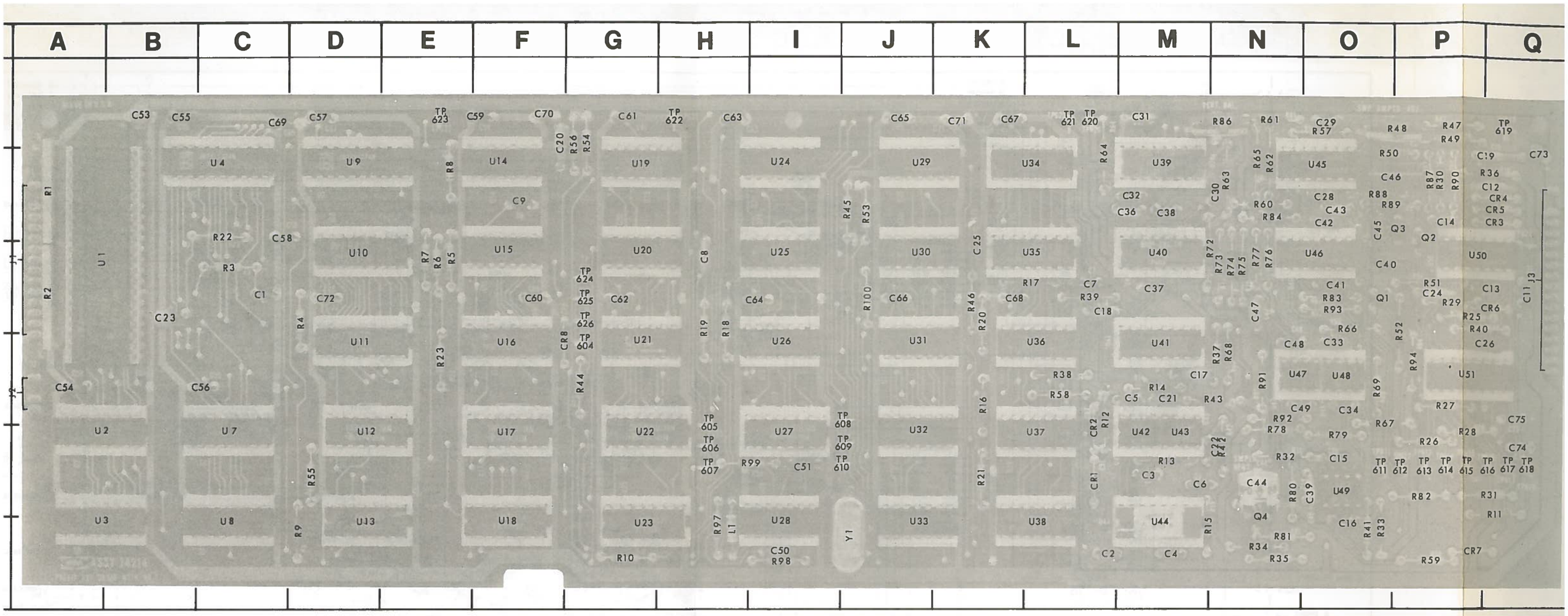

FIGURE 8-9 MEMORY PCB ASSEMBLY

CKT REF	GRID LOC	CKT REF	GRID LOC	CKT REF	GRID LOC	CKT REF	GRID LOC	CKT REF	GRID LOC	CKT REF	GRID LOC	CKT REF	GRID LOC
C1	C-3	C20	G-1	C39	N-5	C58	D-2	CR1	L-5	J8	I-4	J27	---
C2	L-6	C21	M-4	C40	O-3	C59	F-1	CR2	L-4	J9	I-5		
C3	M-5	C22	M-5	C41	O-3	C60	F-3	CR3	P-2	J10	I-5		
C4	L-6	C23	B-3	C42	O-2	C61	G-1	CR4	P-2	J11	O-5	L1	H-5
C5	L-4	C24	P-3	C43	O-2	C62	G-3	CR5	P-2	J12	O-5		
C6	M-5	C25	K-2	C44	N-5	C63	H-1	CR6	P-3	J13	P-5		
C7	L-3	C26	P-4	C45	O-2	C64	I-3	CR7	P-6	J14	P-5	Q1	O-3
C8	H-3	C27	---	C46	O-2	C65	J-1	CR8	G-3	J15	P-5	Q2	P-2
C9	F-2	C28	N-2	C47	N-3	C66	J-3	CR9	---	J16	P-5	Q3	O-2
C10	---	C29	N-1	C48	N-4	C67	K-1	CR10	---	J17	P-5	Q4	N-5
C11	Q-3	C30	M-2	C49	N-4	C68	K-3			J18	Q-5	Q5	---
C12	P-2	C31	M-1	C50	I-6	C69	D-1			J19	P-1	Q6	---
C13	P-3	C32	L-2	C51	I-5	C70	F-1	J1	A-3	J20	L-1		
C14	P-2	C33	O-4	C52	---	C71	K-1	J2	A-4	J21	L-1		
C15	O-5	C34	O-4	C53	B-1	C72	D-3	J3	Q-3	J22	H-1		
C16	---	C35	---	C54	A-4	C73	Q-2	J4	G-3	J23	E-1		
C17	M-4	C36	L-2	C55	C-1	C74	Q-5	J5	H-4	J24	G-3		
C18	L-3	C37	M-3	C56	C-4	C75	Q-4	J6	H-5	J25	G-3		
C19	P-2	C38	M-2	C57	D-1	C76	---	J7	H-5	J26	G-3		

CKT REF	GRID LOC	CKT REF	GRID LOC	CKT REF	GRID LOC	CKT REF	GRID LOC	CKT REF	GRID LOC	CKT REF	GRID LOC	CKT REF	GRID LOC
R1	A-2	R19	H-3	R37	M-4	R55	D-5	R73	M-3	R91	N-4	U4	C-2
R2	A-3	R20	K-3	R38	L-4	R56	G-1	R74	N-3	R92	N-4	U5	---
R3	C-3	R21	K-5	R39	L-3	R57	N-1	R75	N-3	R93	O-3	U6	---
R4	D-3	R22	C-2	R40	P-3	R58	L-4	R76	N-3	R94	O-3	U7	C-4
R5	E-3	R23	E-4	R41	O-5	R59	P-6	R77	N-3	R95	---	U8	C-5
R6	E-3	R24	---	R42	M-5	R60	N-2	R78	N-4	R96	---	U9	D-2
R7	E-3	R25	P-3	R43	M-4	R61	N-1	R79	O-4	R97	H-5	U10	D-3
R8	E-2	R26	P-5	R44	G-4	R62	N-2	R80	N-5	R98	I-6	U11	D-3
R9	D-5	R27	P-4	R45	J-2	R63	M-2	R81	N-6	R99	I-5	U12	D-4
R10	G-6	R28	P-4	R46	K-3	R64	L-2	R82	P-5	R100	J-3	U13	D-5
R11	P-5	R29	P-3	R47	P-1	R65	N-2	R83	O-3	R101	---	U14	F-2
R12	L-4	R30	P-2	R48	O-1	R66	O-3	R84	N-2	R102	---	U15	F-3
R13	M-5	R31	P-5	R49	P-1	R67	O-4	R85	---	R103	---	U16	F-3
R14	M-4	R32	N-5	R50	O-2	R68	M-4	R86	M-1	R104	---	U17	F-4
R15	M-5	R33	O-5	R51	P-3	R69	O-4	R87	P-2			U18	F-5
R16	K-4	R34	N-6	R52	O-3	R70	---	R88	O-2	U1	B-2	U19	G-2
R17	K-3	R35	N-6	R53	J-2	R71	---	R89	O-2	U2	B-4	U20	G-3
R18	H-3	R36	P-2	R54	G-1	R72	M-3	R90	P-2	U3	B-5	U21	G-3

CKT REF	GRID LOC	CKT REF	GRID LOC
U22	G-4	U40	M-3
U23	G-5	U41	M-4
U24	I-2	U42	M-4
U25	I-3	U43	M-4
U26	I-3	U44	M-5
U27	I-4	U45	N-2
U28	I-5	U46	N-3
U29	J-2	U47	N-4
U30	J-3	U48	O-4
U31	J-3	U49	O-5
U32	J-4	U50	P-3
U33	J-5	U51	P-4
U34	K-2		
U35	K-3		
U36	K-4		
U37	K-4	Y1	J-5
U38	K-5		
U39	M-2		

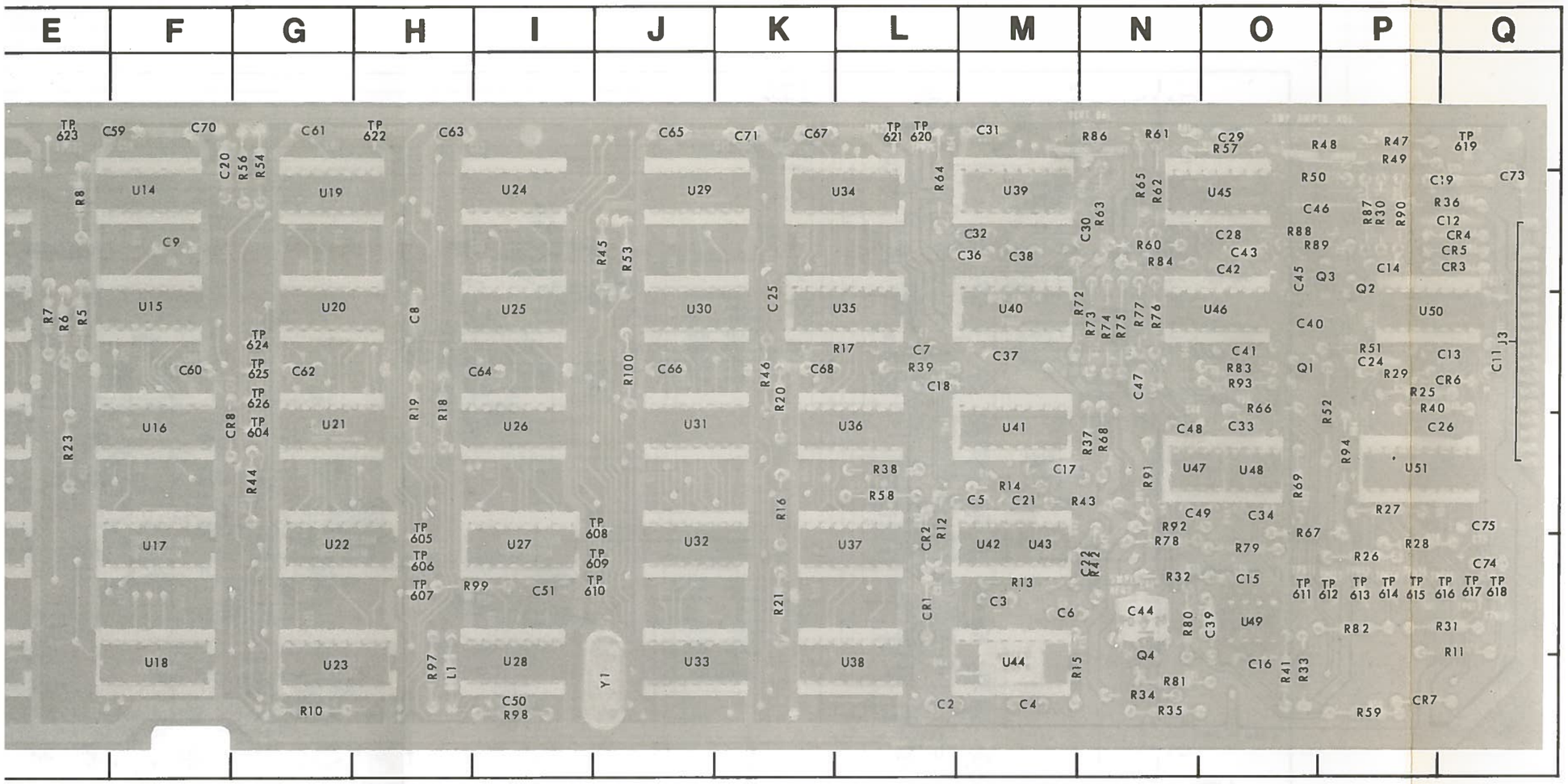

FIGURE 8-9 MEMORY PCB ASSEMBLY

ID	CKT REF	GRID LOC	CKT REF	GRID LOC	CKT REF	GRID LOC	CKT REF	GRID LOC	CKT REF	GRID LOC	CKT REF	GRID LOC	CKT REF	GRID LOC	CKT REF	GRID LOC	CKT REF	GRID LOC	CKT REF	GRID LOC	CKT REF	GRID LOC	CKT REF	GRID LOC	CKT REF	GRID LOC
2	CR1	L-5	J8	I-4	J27	---	R1	A-2	R19	H-3	R37	M-4	R55	D-5	R73	M-3	R91	N-4	U4	C-2	U22	G-4	U40	M-3
1	CR2	L-4	J9	I-5			R2	A-3	R20	K-3	R38	L-4	R56	G-1	R74	N-3	R92	N-4	U5	---	U23	G-5	U41	M-4
3	CR3	P-2	J10	I-5			R3	C-3	R21	K-5	R39	L-3	R57	N-1	R75	N-3	R93	O-3	U6	---	U24	I-2	U42	M-4
1	CR4	P-2	J11	O-5	L1	H-5	R4	D-3	R22	C-2	R40	P-3	R58	L-4	R76	N-3	R94	O-3	U7	C-4	U25	I-3	U43	M-4
3	CR5	P-2	J12	O-5			R5	E-3	R23	E-4	R41	O-5	R59	P-6	R77	N-3	R95	---	U8	C-5	U26	I-3	U44	M-5
1	CR6	P-3	J13	P-5			R6	E-3	R24	---	R42	M-5	R60	N-2	R78	N-4	R96	---	U9	D-2	U27	I-4	U45	N-2
3	CR7	P-6	J14	P-5	Q1	O-3	R7	E-3	R25	P-3	R43	M-4	R61	N-1	R79	O-4	R97	H-5	U10	D-3	U28	I-5	U46	N-3
1	CR8	G-3	J15	P-5	Q2	P-2	R8	E-2	R26	P-5	R44	G-4	R62	N-2	R80	N-5	R98	I-6	U11	D-3	U29	J-2	U47	N-4
3	CR9	---	J16	P-5	Q3	O-2	R9	D-5	R27	P-4	R45	J-2	R63	M-2	R81	N-6	R99	I-5	U12	D-4	U30	J-3	U48	O-4
1	CR10	---	J17	P-5	Q4	N-5	R10	G-6	R28	P-4	R46	K-3	R64	L-2	R82	P-5	R100	J-3	U13	D-5	U31	J-3	U49	O-5
3			J18	Q-5	Q5	---	R11	P-5	R29	P-3	R47	P-1	R65	N-2	R83	O-3	R101	---	U14	F-2	U32	J-4	U50	P-3
1			J19	P-1	Q6	---	R12	L-4	R30	P-2	R48	O-1	R66	O-3	R84	N-2	R102	---	U15	F-3	U33	J-5	U51	P-4
1	J1	A-3	J20	L-1			R13	M-5	R31	P-5	R49	P-1	R67	O-4	R85	---	R103	---	U16	F-3	U34	K-2		
1	J2	A-4	J21	L-1			R14	M-4	R32	N-5	R50	O-2	R68	M-4	R86	M-1	R104	---	U17	F-4	U35	K-3		
3	J3	Q-3	J22	H-1			R15	M-5	R33	O-5	R51	P-3	R69	O-4	R87	P-2			U18	F-5	U36	K-4		
2	J4	G-3	J23	E-1			R16	K-4	R34	N-6	R52	O-3	R70	---	R88	O-2	U1	B-2	U19	G-2	U37	K-4	Y1	J-5
5	J5	H-4	J24	G-3			R17	K-3	R35	N-6	R53	J-2	R71	---	R89	O-2	U2	B-4	U20	G-3	U38	K-5		
4	J6	H-5	J25	G-3			R18	H-3	R36	P-2	R54	G-1	R72	M-3	R90	P-2	U3	B-5	U21	G-3	U39	M-2		
-	J7	H-5	J26	G-3																				

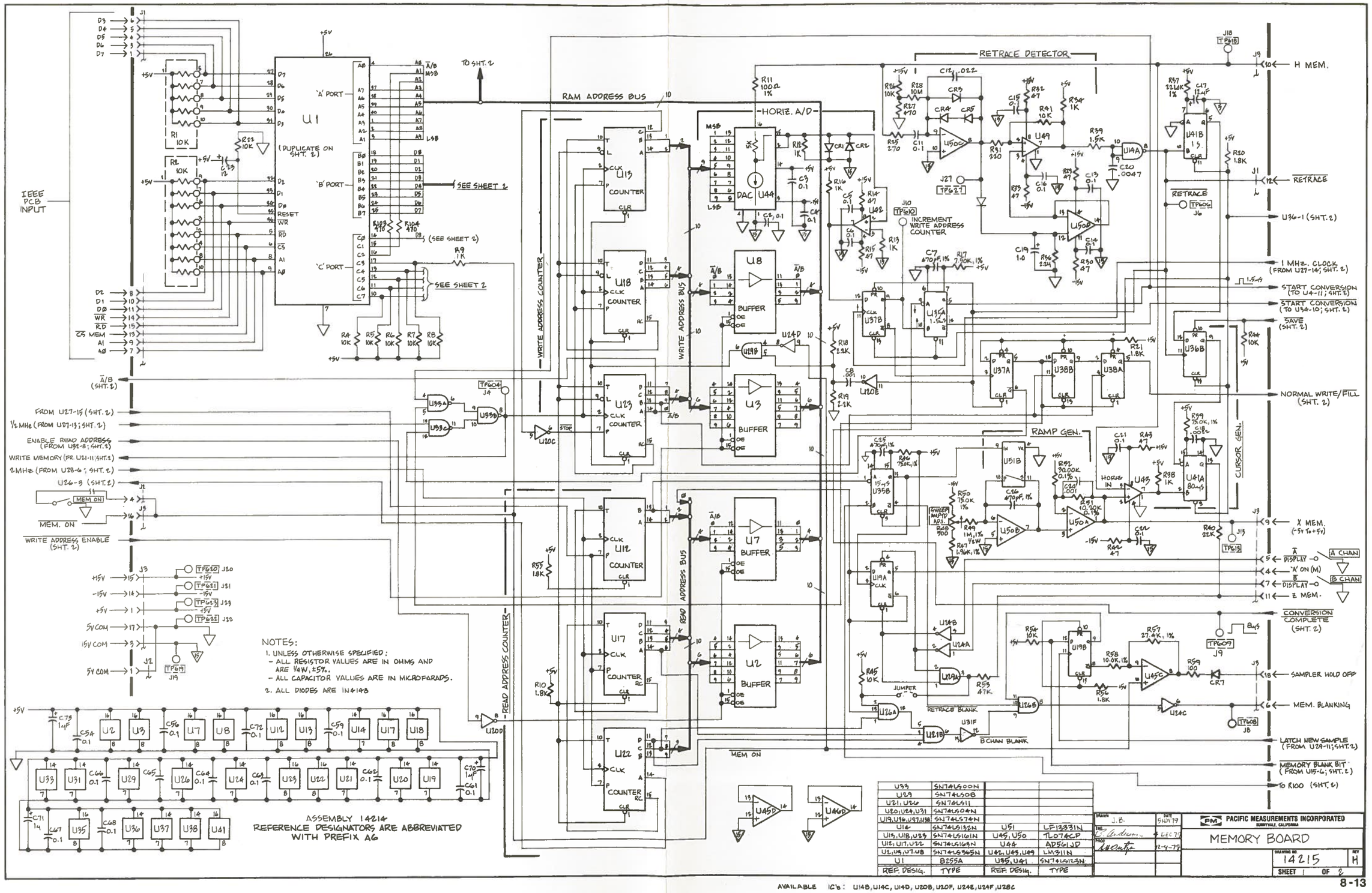

REF. DESIG.	TYPE	REF. DESIG.	TYPE
U33	SN74LS00N		
U29	SN74LS08		
U21, U26	SN74LS11		
U20, U24, U31	SN74LS04N		
U19, U16, U37, U38	SN74LS74N		
U14	SN74LS132N	U51	LF13331N
U15, U18, U25	SN74LS161N	U45, U50	TL074CP
U12, U17, U22	SN74LS169N	U46	AD561JD
U6, U9, U7, U8	SN74LS365N	U42, U43, U49	LM311N
U1	B255A	U35, U41	SN74LS123N

AVAILABLE IC'S: U14B, U14C, U14D, U20B, U20F, U24E, U24F, U28C

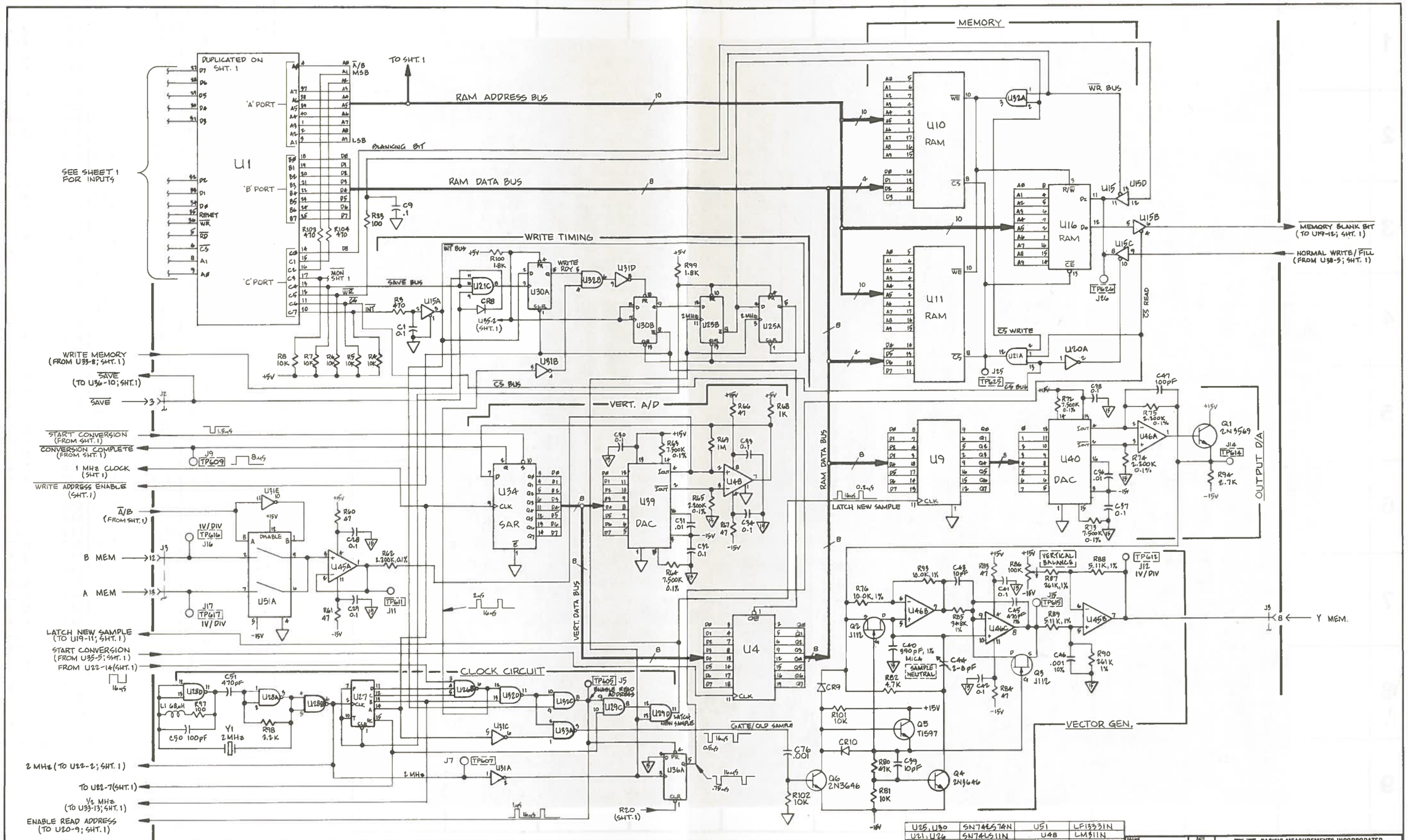

U25, U30	SN74LS74N	U51	LF13331N
U21, U26	SN74LS11N	U48	LM311N
U20, U31	SN74LS04N	U45, U46	TL074CP
U16	P2102A	U39, U40	DAC08CQ
U15	SN74LS125N	U34	DM2503N
U10, U11	P2114	U32	SN74LS08N
U4, U9	SN74LS374N	U28	SN74LS00N
U1	8255A	U27	SN74LS163N
REF. DESIG.	TYPE	REF. DESIG.	TYPE

AVAILABLE IC'S: U14B, U14C, U14D, U20B, U20F, U24E, U24F, U28C

DRAWN J.B	DATE 6 NOV 79	PACIFIC MEASUREMENTS INCORPORATED SUNNYVALE, CALIFORNIA
CHK'D	4 DEC 79	MEMORY BOARD
PROJ	12-4-79	DRAWING NO. 14215 REV H
		SHEET 2 OF 2

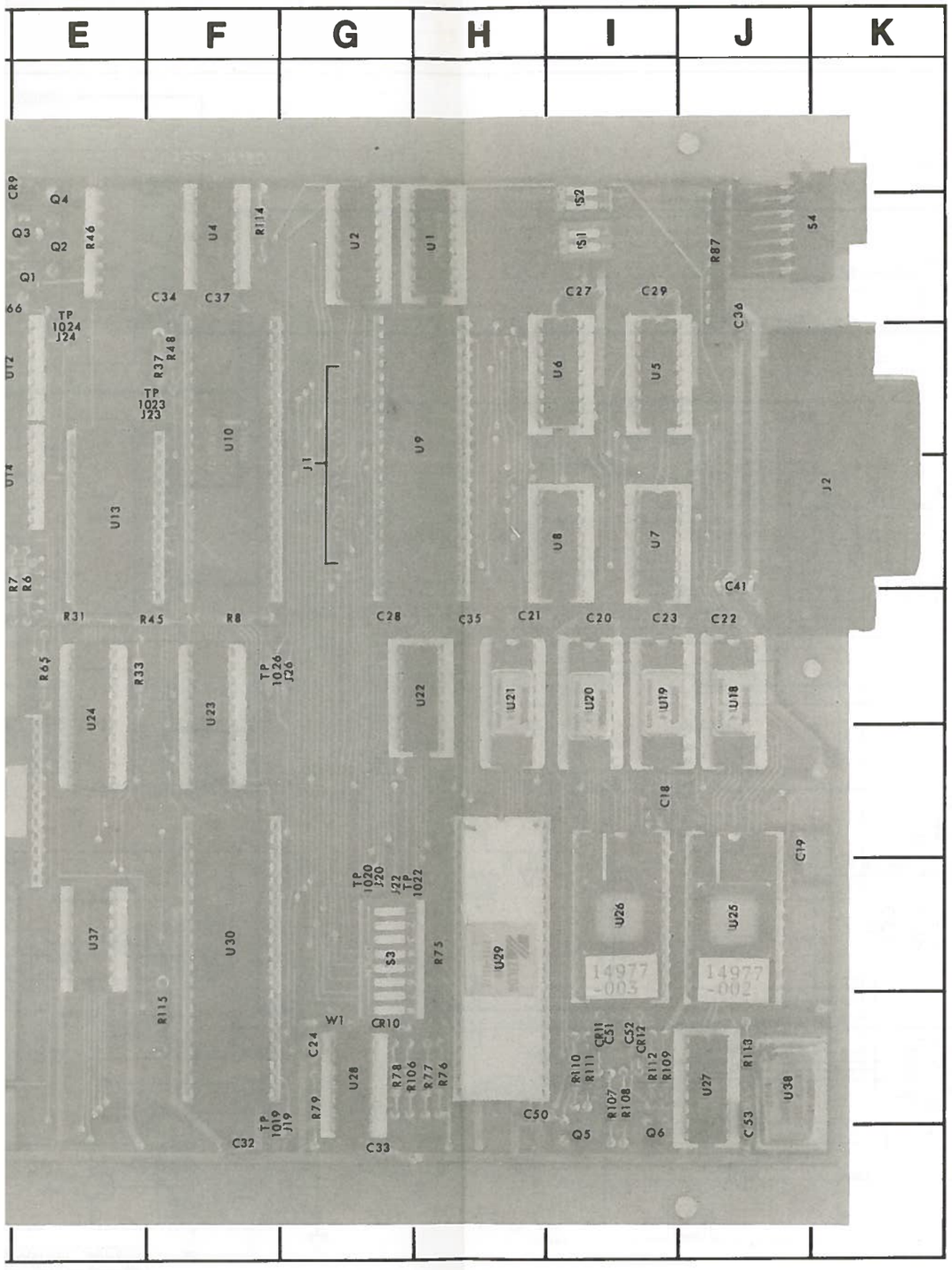

CKT REF	GRID LOC	CKT REF	GRID LOC	CKT REF	GRID LOC	CKT REF	GRID LOC	CKT REF	GRID LOC
C1	B-3	CR1	C-3	R1	B-4	R57	B-6	R113	J-8
C2	C-2	CR2	C-3	R2	B-4	R58	B-6	R114	F-2
C3	D-3	CR3	C-2	R3	B-4	R59	B-6	R115	E-7
C4	C-4	CR4	C-3	R4	B-4	R60	B-5		
C5	D-5	CR5	D-4	R5	C-4	R61	B-7	S1	I-2
C6	D-6	CR6	D-4	R6	D-4	R62	B-7	S2	I-2
C7	D-5	CR7	---	R7	D-4	R63	B-7	S3	G-7
C8	D-7	CR8	---	R8	F-5	R64	C-7	S4	J-2
C9	C-3	CR9	D-1	R9	B-4	R65	E-5		
C10	C-4	CR10	G-8	R10	B-4	R66	D-2		
C11	D-6	CR11	I-8	R11	C-2	R67	C-8		
C12	C-6	CR12	I-8	R12	C-2	R68	C-8	U1	G-2
C13	D-6			R13	C-2	R69	B-8	U2	G-2
C14	B-6	J1	G-3	R14	C-2	R70	---	U3	---
C15	B-8	J2	J-3	R15	B-2	R71	C-6	U4	F-2
C16	D-8	J3	A-4	R16	B-2	R72	C-6	U5	I-3
C17	C-8	J4	A-4	R17	B-2	R73	B-5	U6	H-3
C18	I-6	J5	A-4	R18	B-2	R74	B-5	U7	I-4
C19	J-6	J6	B-3	R19	D-2	R75	G-7	U8	H-4
C20	I-5	J7	C-3	R20	C-2	R76	G-8	U9	G-3
C21	H-5	J8	D-3	R21	C-2	R77	G-8	U10	F-3
C22	J-5	J9	D-7	R22	C-3	R78	G-8	U11	---
C23	I-5	J10	C-7	R23	D-3	R79	G-8	U12	D-3
C24	G-8	J11	C-6	R24	C-2	R80	---	U13	E-4
C25	---	J12	B-7	R25	C-3	R81	---	U14	D-4
C26	---	J13	D-5	R26	C-3	R82	---	U15	C-4
C27	I-2	J14	A-3	R27	D-2	R83	---	U16	C-4
C28	G-5	J15	B-5	R28	C-3	R84	---	U17	B-4
C29	I-2	J16	D-6	R29	D-4	R85	---	U18	J-5
C30	B-6	J17	C-5	R30	D-4	R86	---	U19	I-5
C31	C-6	J18	C-5	R31	E-5	R87	J-2	U20	I-5
C32	F-8	J19	F-8	R32	C-4	R88	B-6	U21	H-5
C33	G-8	J20	G-6	R33	E-5	R89	C-7	U22	G-5
C34	E-2	J21	---	R34	D-4	R90	C-4	U23	F-5
C35	H-5	J22	G-7	R35	D-5	R91	B-2	U24	E-5
C36	J-2	J23	E-3	R36	D-5	R92	B-2	U25	J-7
C37	F-2	J24	E-3	R37	E-3	R93	D-5	U26	I-7
C38	B-5	J25	B-4	R38	---	R94	C-4	U27	I-8
C39	B-5	J26	F-5	R39	---	R95	C-4	U28	G-8
C40	A-4			R40	---	R96	B-2	U29	H-7
C41	J-4	Q1	D-2	R41	---	R97	B-4	U30	F-7
C42	---	Q2	E-2	R42	D-7	R98	C-2	U31	D-6
C43	C-4	Q3	D-2	R43	D-7	R99	D-3	U32	---
C44	C-4	Q4	E-1	R44	---	R100	B-5	U33	C-6
C45	C-3	Q5	I-8	R45	E-5	R101	B-7	U34	B-6
C46	B-3	Q6	I-8	R46	E-2	R102	B-8	U35	B-8
C47	C-3			R47	D-2	R103	---	U36	C-6
C48	C-3			R48	F-3	R104	---	U37	E-7
C49	C-5			R49	B-3	R105	---	U38	J-8
C50	H-8			R50	C-4	R106	G-8		
C51	I-8			R51	C-5	R107	I-8		
C52	I-8			R52	C-5	R108	I-8		
C53	J-8			R53	D-5	R109	I-8		
				R54	C-5	R110	H-8		
				R55	C-7	R111	I-8		
				R56	C-5	R112	I-8		

3 8-10 IEEE INTERFACE BUS PCB ASSEMBLY

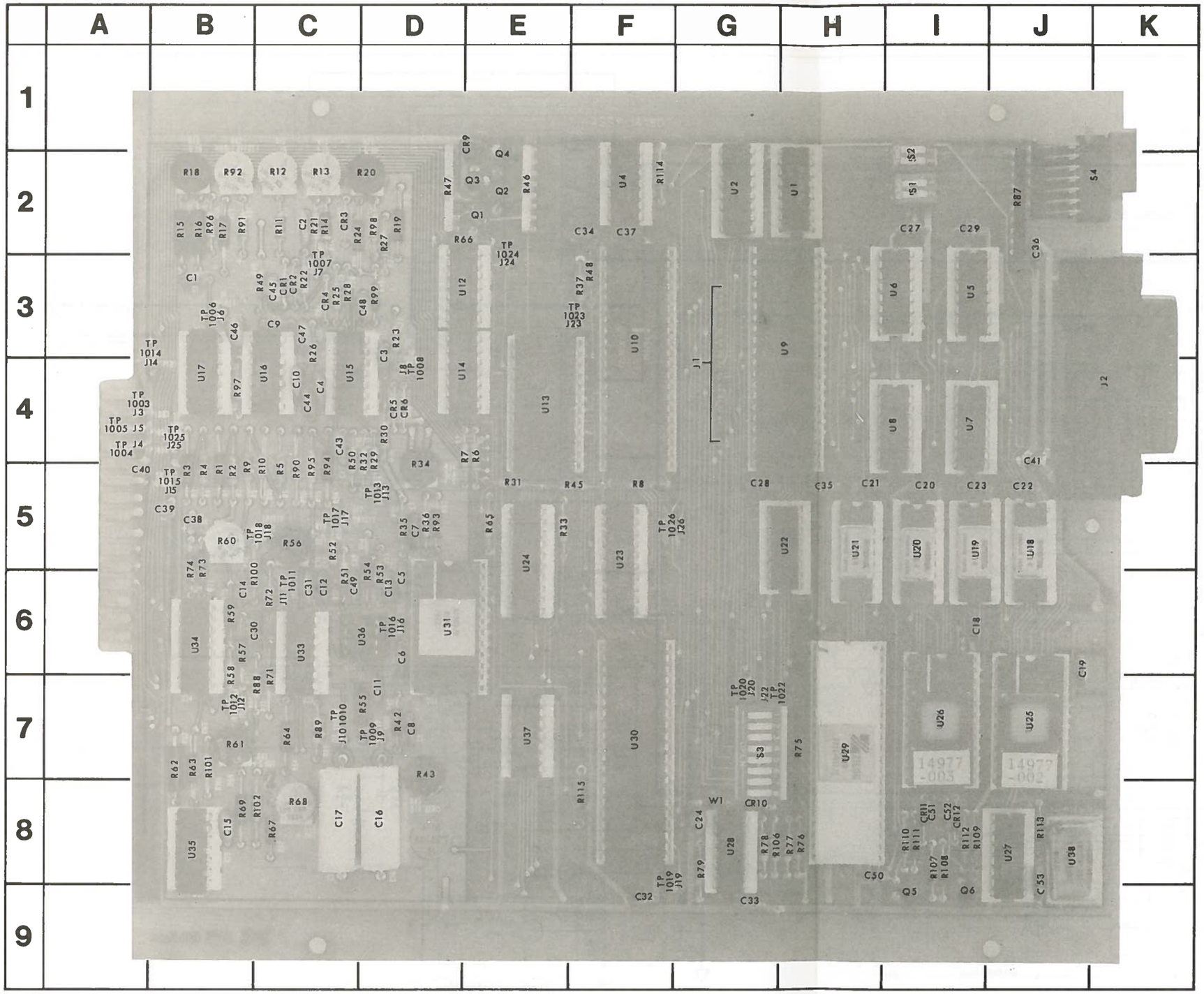

CKT REF	GRID LOC	CKT REF	GRID LOC	CKT REF	GRID LOC	CKT REF	GRID LOC
C1	B-3	CR1	C-3	R1	B-4	R57	B-6
C2	C-2	CR2	C-3	R2	B-4	R58	B-6
C3	D-3	CR3	C-2	R3	B-4	R59	B-6
C4	C-4	CR4	C-3	R4	B-4	R60	B-5
C5	D-5	CR5	D-4	R5	C-4	R61	B-7
C6	D-6	CR6	D-4	R6	D-4	R62	B-7
C7	D-5	CR7	---	R7	D-4	R63	B-7
C8	D-7	CR8	---	R8	F-5	R64	C-7
C9	C-3	CR9	D-1	R9	B-4	R65	E-5
C10	C-4	CR10	G-8	R10	B-4	R66	D-2
C11	D-6	CR11	I-8	R11	C-2	R67	C-8
C12	C-6	CR12	I-8	R12	C-2	R68	C-8
C13	D-6			R13	C-2	R69	B-8
C14	B-6	J1	G-3	R14	C-2	R70	---
C15	B-8	J2	J-3	R15	B-2	R71	C-6
C16	D-8	J3	A-4	R16	B-2	R72	C-6
C17	C-8	J4	A-4	R17	B-2	R73	B-5
C18	I-6	J5	A-4	R18	B-2	R74	B-5
C19	J-6	J6	B-3	R19	D-2	R75	G-7
C20	I-5	J7	C-3	R20	C-2	R76	G-8
C21	H-5	J8	D-3	R21	C-2	R77	G-8
C22	J-5	J9	D-7	R22	C-3	R78	G-8
C23	I-5	J10	C-7	R23	D-3	R79	G-8
C24	G-8	J11	C-6	R24	C-2	R80	---
C25	---	J12	B-7	R25	C-3	R81	---
C26	---	J13	D-5	R26	C-3	R82	---
C27	I-2	J14	A-3	R27	D-2	R83	---
C28	G-5	J15	B-5	R28	C-3	R84	---
C29	I-2	J16	D-6	R29	D-4	R85	---
C30	B-6	J17	C-5	R30	D-4	R86	---
C31	C-6	J18	C-5	R31	E-5	R87	J-2
C32	F-8	J19	F-8	R32	C-4	R88	B-6
C33	G-8	J20	G-6	R33	E-5	R89	C-7
C34	E-2	J21	---	R34	D-4	R90	C-4
C35	H-5	J22	G-7	R35	D-5	R91	B-2
C36	J-2	J23	E-3	R36	D-5	R92	B-2
C37	F-2	J24	E-3	R37	E-3	R93	D-5
C38	B-5	J25	B-4	R38	---	R94	C-4
C39	B-5	J26	F-5	R39	---	R95	C-4
C40	A-4			R40	---	R96	B-2
C41	J-4	Q1	D-2	R41	---	R97	B-4
C42	---	Q2	E-2	R42	D-7	R98	C-2
C43	C-4	Q3	D-2	R43	D-7	R99	D-3
C44	C-4	Q4	E-1	R44	---	R100	B-5
C45	C-3	Q5	I-8	R45	E-5	R101	B-7
C46	B-3	Q6	I-8	R46	E-2	R102	B-8
C47	C-3			R47	D-2	R103	---
C48	C-3			R48	F-3	R104	---
C49	C-5			R49	B-3	R105	---
C50	H-8			R50	C-4	R106	G-8
C51	I-8			R51	C-5	R107	I-8
C52	I-8			R52	C-5	R108	I-8
C53	J-8			R53	D-5	R109	I-8
				R54	C-5	R110	H-8
				R55	C-7	R111	I-8
				R56	C-5	R112	I-8

FIGURE 8-10 IEEE INTERFACE BUS PCB ASSEMBLY

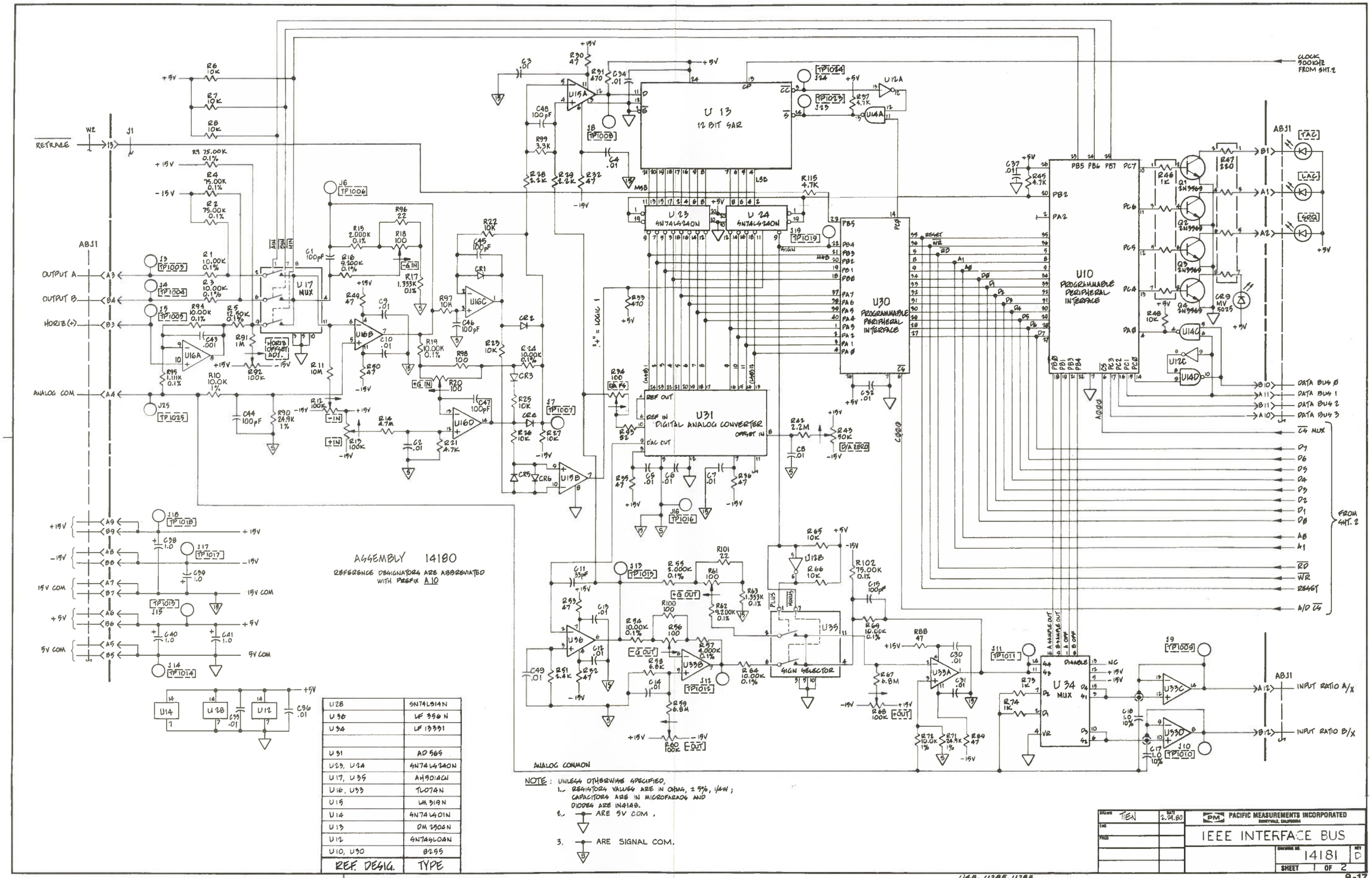

REF. DESIG.	TYPE
U28	SN74LS14N
U30	LF 356 N
U34	LF 13331
U31	AD 565
U23, U24	SN74LS240N
U17, U35	AH5014CN
U16, U33	TL074N
U15	LM 319 N
U14	SN74LS01N
U13	DM 2506N
U12	SN74S00AN
U10, U30	8255

NOTE: UNLESS OTHERWISE SPECIFIED,
1. RESISTORS VALUES ARE IN OHMS, ± 5%, 1/4W; CAPACITORS ARE IN MICROFARADS AND DIODES ARE IN4148.
2. ARE 5V COM.
3. ARE SIGNAL COM.

AVAILABLE IC'S: U12D, U12E, U12F U28, U28E, U28F

DRAWN TIEN	DATE 2.14.80	PACIFIC MEASUREMENTS INCORPORATED SUNNYVALE, CALIFORNIA	
ENG		IEEE INTERFACE BUS	
PROD		DRAWING NO. 14181	REV D
		SHEET 1 OF 2	

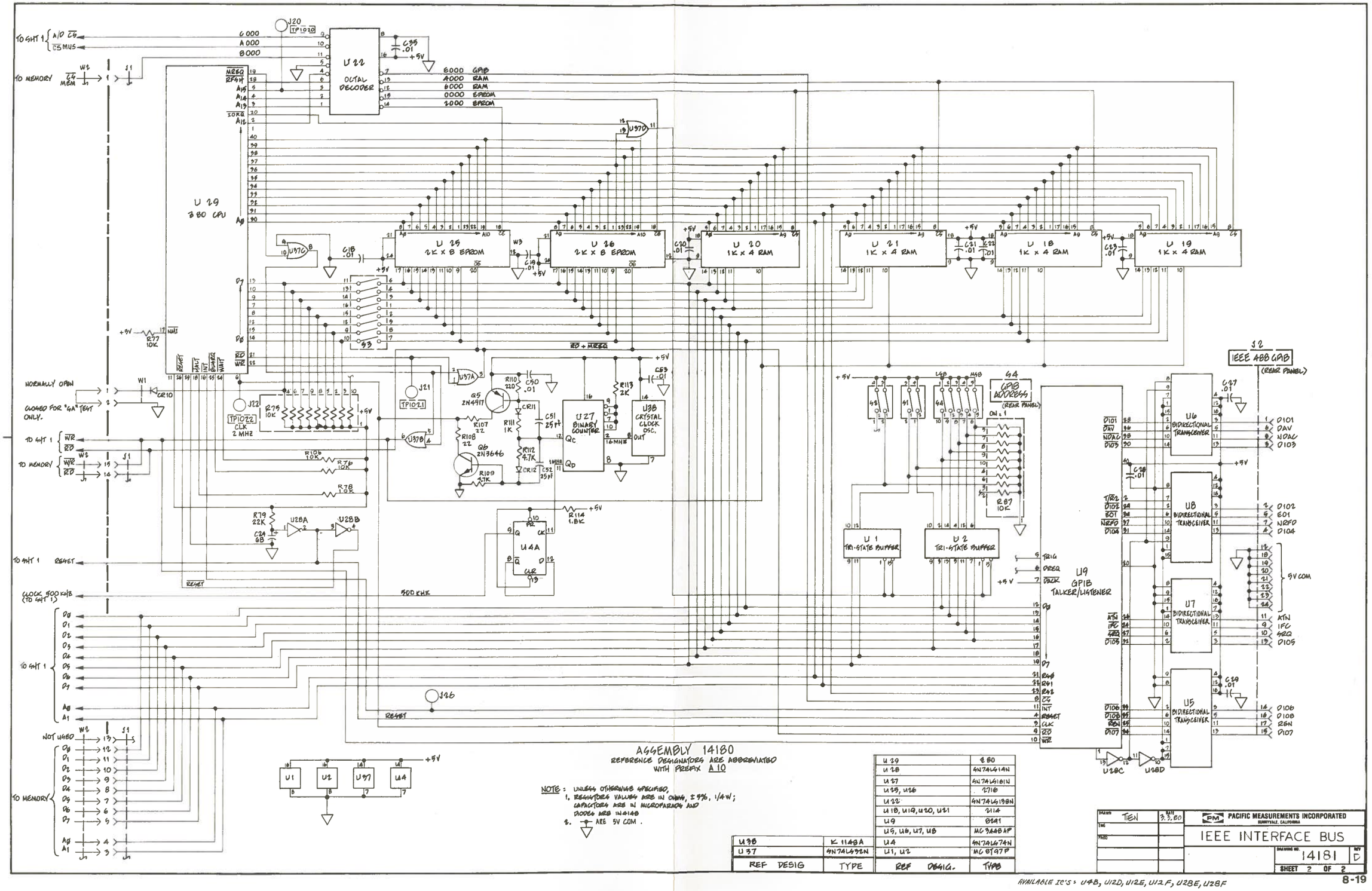

ASSEMBLY 14180
REFERENCE DESIGNATORS ARE ABBREVIATED WITH PREFIX A10

NOTE: UNLESS OTHERWISE SPECIFIED,
1. RESISTOR VALUES ARE IN OHMS, ±5%, 1/4W; CAPACITORS ARE IN MICROFARADS AND DIODES ARE 1N4148
2. ⏚ ARE 5V COM.

REF DESIG	TYPE
U38	K 1148A
U37	4N74LS22N

REF DESIG.	TYPE
U29	Z80
U28	4N74LS14N
U27	4N74LS161N
U25, U26	2716
U22	4N74LS138N
U18, U19, U20, U21	2114
U9	8291
U5, U6, U7, U8	MC 3448AP
U4	4N74LS74N
U1, U2	MC 8T97P

AVAILABLE IC'S: U4B, U12D, U12E, U12F, U28E, U28F

DRAWN TIEN	DATE 3.3.80	PACIFIC MEASUREMENTS INCORPORATED SUNNYVALE, CALIFORNIA
ENG		IEEE INTERFACE BUS
PROD		DRAWING NO. 14181 REV D
		SHEET 2 OF 2

SECTION 9

REPLACEABLE PARTS LIST

CIRCUIT REFERENCE	PM PART NO.	DESCRIPTION
		MAINFRAME/DISPLAY CHASSIS ASSEMBLY - 14974
A1	14101	Interface PC Board Assembly
A2	14218	Interconnect PC Board Assembly
A3	14126	Power Supply PC Board Assembly
A4	14087	Deflection PC Board Assembly
A5	14095	High Voltage PC Board Assembly
A6	14214	Memory PC Board Assembly
A7	14413	Front Panel PC Board Assembly
A8	14584	IEEE Indicator PC Board Assembly
A9	14493	IEEE Interconnect PC Board Assy.
A10	14180	IEEE Indicator Bus PC Board Assembly (Option #04)
CR1	14476	MDA 980-1
CR2	14945	LED, Red
F1	15058-1	Fuse 2.0A 250V
J1	13492	AC Receptacle
J2	10048	BNC UG-1094/U
J3	10048	BNC UG-1094/U
J4	10048	BNC UG-1094/U
J5	10048	BNC UG-1094/U
J6	14482	14 Contacts
J7	10048	BNC UG-1094/U
J8	11689	Insulated, BNC
J9	11689	Insulated, BNC
J10	11689	Insulated, BNC
J11	14931-1	Housing, 2 Contacts
L1	14547	Twist Coil
R1	14601-1	Variable 25K Ohm ±20% ½W
R2	11676-1	Variable 100K Ohm ±20% ½W
R3	14601-2	Variable 5K Ohm ±20% ½W
R4	10013-1	Carbon Film 10 Ohm ±5% ¼W
T1	14093	Transformer
V1	14548	CRT Tube
W1	14567	Cable Assy
W2	14568	Cable Assy, Main
W3	14569	Cable Assy
W4	14570	Cable, CRT
W5	14571	Cable Assy
W6	14572	Cable Assy
		INTERFACE PC BOARD ASSEMBLY - 14101
A1C1	10000-11	Ceramic .01 uF ±20% 100V
A1C2	10000-11	Ceramic .01 uF ±20% 100V
A1J1	12440-5	44 Contacts
A1J2	12440-5	44 Contacts
A1J3	12440-5	44 Contacts
A1J4	12440-1	36 Contacts
A1J5	14514-1	Post .025 Square
A1J6	14514-1	Post .025 Square
A1R1	10013-13	Carbon Film 100 Ohm ±5% ¼W
A1R2	12449-22	Metal Film 2.500K Ohm ±0.1% 1/8W
A1R3	10013-29	Carbon Film 2.2K Ohm ±5% ¼W
A1R4	12449-22	Metal Film 2.500K Ohm ±0.1% 1/8W
A1R5	10013-29	Carbon Film 2.2K Ohm ±5% ¼W
A1R6	10013-13	Carbon Film 100 Ohm ±5% ¼W
A1U1	14621	LM358N
		INTERCONNECT PC BOARD ASSEMBLY - 14218
A2C1	10238-3	Elect 42500 uF +100% -10% 10V
A2C2	10238-4	Elect 7500 uF +100% -10% 25V
A2C3	10238-4	Elect 7500 uF +100% -10% 25V
A2C4	10000-11	Ceramic .01 uF ±20% 100V
A2CR1	12409	Rectifier PE10
A2J1	---	Not Used
A2J2	14654	Tabs
A2J3	---	Not Used
A2J4	12440-4	30 Contacts
A2J5	14654	Tabs
A2J6	14514-1	Post .025 Square
A2J7	14655	36 Contacts
A2R1	10013-21	Carbon Film 470 Ohm ±5% ¼W
A2R2	10013-33	Carbon Film 4.7K Ohm ±5% ¼W
A2R3	10013-31	Carbon Film 3.3K Ohm ±5% ¼W
A2R4	10013-33	Carbon Film 4.7K Ohm ±5% ¼W
		POWER SUPPLY PC BOARD ASSEMBLY - 14126
A3C1	10787-4	Tantalum 68 uF ±20% 15V
A3C2	10000-11	Ceramic .01 uF ±20% 100V
A3C3	10000-1	Ceramic 100 pF ±20% 1000V
A3C4	10000-4	Ceramic .001 uF ±20% 1000V
A3C5	10787-4	Tantalum 68 uF ±20% 15V
A3C6	---	Not Used
A3C7	---	Not Used
A3C8	---	Not Used
A3C9	10585-1	Ceramic 220 pF ±5% 1000V
A3C10	10000-4	Ceramic .001 uF ±20% 1000V
A3C11	10000-4	Ceramic .001 uF ±20% 1000V
A3C12	10000-11	Ceramic .01 uF ±20% 100V
A3C13	10787-4	Tantalum 68 uF ±20% 15V
A3C14	10000-4	Ceramic .001 uF ±20% 1000V
A3C15	10000-4	Ceramic .001 uF ±20% 1000V
A3C16	10000-11	Ceramic .01 uF ±20% 100V
A3C17	10787-4	Tantalum 68 uF ±20% 15V

CIRCUIT REFERENCE	PM PART NO.	DESCRIPTION
A3CR1	10043	IN4148
A3CR2	11868	IN5229B 4.3V ±5%
A3CR3	---	Not Used
A3CR4	10043	IN4148
A3CR5	10043	IN4148
A3CR6	10043	IN4148
A3CR7	10043	IN4148
A3CR8	10043	IN4148
A3CR9	10043	IN4148
A3CR10	10045	IN823
A3CR11	10043	IN4148
A3CR12	10043	IN4148
A3CR13	10044-1	IN4383
A3CR14	10043	IN4148
A3CR15	10044-1	IN4383
A3F1	10064-13	Fuse 10 AMP 125V
A3J1	14320-2	Test Jack
A3J2	14320-2	Test Jack
A3J3	14320-2	Test Jack
A3J4	14320-2	Test Jack
A3J5	14320-2	Test Jack
A3J6	14320-2	Test Jack
A3J7	14320-2	Test Jack
A3J8	14320-2	Test Jack
A3J9	14320-2	Test Jack
A3Q1	11119	2N4250
A3Q2	10206	2N3053
A3Q3	14622	2N6486
A3Q4	14623	2N6489
A3Q5	10206	2N3053
A3Q6	10927	2N4314
A3Q7	14622	2N6486
A3R1	10015-133	Metal Film 49.9K Ohm ±1% 1/8W
A3R2	10015-211	Metal Film 2.74K Ohm ±1% 1/8W
A3R3	14935-1	Wire Wound 0.1 Ohm ±10% 4W
A3R4	10013-37	Carbon Film 10K Ohm ±5% ¼W
A3R5	10015-19	Metal Film 1.00K Ohm ±1% 1/8W
A3R6	10015-13	Metal Film 100K Ohm ±1% 1/8W
A3R7	10013-33	Carbon Film 4.7K Ohm ±5% ¼W
A3R8	11845-4	Metal Glaze 15 Ohm ±10% 2W
A3R9	10013-25	Carbon Film 1K Ohm ±5% ¼W
A3R10	10013-29	Carbon Film 2.2K Ohm ±5% ¼W
A3R11	10013-33	Carbon Film 4.7K Ohm ±5% ¼W
A3R12	10015-188	Metal Film 33.2K Ohm ±1% 1/8W
A3R13	10046-8	Variable Comp 10K Ohm ±20% ¼W
A3R14	10013-11	Carbon Film 68 Ohm ±5% ¼W
A3R15	14935-1	Wire Wound 0.1 Ohm ±10% 4W
A3R16	---	Not Used
A3R17	10013-25	Carbon Film 1K Ohm ±5% ¼W
A3R18	10013-37	Carbon Film 10K Ohm ±5% ¼W
A3R19	10665-3	Carbon Comp 100 Ohm ±10% 1W
A3R20	10013-29	Carbon Film 2.2K Ohm ±5% ¼W
A3R21	10015-65	Metal Film 4.99K Ohm ±1% 1/8W
A3R22	12449-21	Metal Film 10.00K Ohm ±0.1% 1/8W
A3R23	10046-9	Variable Comp 100 Ohm ±20% ¼W
A3R24	12449-21	Metal Film 10.00K Ohm ±0.1% 1/8W
A3R25	12449-51	Metal Film 2.000K Ohm ±0.1% 1/8W
A3R26	14935-1	Wire Wound 0.1 Ohm ±10% 4W
A3R27	12449-75	Metal Film 1.745K Ohm ±0.1% 1/8W
A3R28	12449-37	Metal Film 20.00K Ohm ±0.1% 1/8W
A3R29	12449-37	Metal Film 20.00K Ohm ±0.1% 1/8W
A3R30	10665-3	Carbon Comp 100 Ohm ±10% 1W
A3R31	10013-25	Carbon Film 1K Ohm ±5% ¼W
A3R32	10013-37	Carbon Film 10K Ohm ±5% ¼W
A3R33	10013-61	Carbon Film 1M Ohm ±5% ¼W
A3R34	10015-20	Metal Film 1.10K Ohm ±1% 1/8W
A3R35	10015-84	Metal Film 2.10K Ohm ±1% 1/8W
A3R36	10015-65	Metal Film 4.99K Ohm ±1% 1/8W
A3R37	11711-1	Variable 500 Ohm ±20% ½W
A3R38	10015-176	Metal Film 3.48K Ohm ±1% 1/8W
A3R39	12449-37	Metal Film 20.00K Ohm ±0.1% 1/8W
A3R40	12449-74	Metal Film 1.182K Ohm ±0.1% 1/8W
A3R41	14935-1	Wire Wound 0.1 Ohm ±10% 4W
A3R42	12449-37	Metal Film 20.00K Ohm ±0.1% 1/8W
A3R43	12449-19	Metal Film 1.000K Ohm ±0.1% 1/8W
A3R44	10013-9	Carbon Film 47 Ohm ±5% ¼W
A3U1	14621	LM358N
A3U2	13471	LM324N

DEFLECTION PC BOARD ASSEMBLY - 14087

CIRCUIT REFERENCE	PM PART NO.	DESCRIPTION
A4C1	10003-16	Electrolytic 40 uF
A4C2	10000-11	Ceramic .01 uF ±20% 100V
A4C3	10000-11	Ceramic .01 uF ±20% 100V
A4C4	10000-11	Ceramic .01 uF ±20% 100V
A4C5	10000-11	Ceramic .01 uF ±20% 100V
A4C6	10000-11	Ceramic .01 uF ±20% 100V
A4C7	10000-11	Ceramic .01 uF ±20% 100V
A4C8	10001-12	Ceramic 3.3 pF ±5% 1000V
A4C9	10000-1	Ceramic 100 pF ±20% 1000V
A4C10	10000-11	Ceramic .01 uF ±20% 100V
A4C11	10000-11	Ceramic .01 uF ±20% 100V
A4C12	10000-11	Ceramic .01 uF ±20% 100V
A4C13	10000-11	Ceramic .01 uF ±20% 100V
A4C14	10000-1	Ceramic 100 pF ±20% 1000V
A4C15	10000-11	Ceramic .01 uF ±20% 100V
A4C16	10585-4	Ceramic 680 pF ±5% 1000V
A4C17	10000-11	Ceramic .01 uF ±20% 100V
A4C18	10000-1	Ceramic 100 pF ±20% 1000V
A4C19	10000-4	Ceramic .001 uF ±20% 1000V
A4C20	10000-11	Ceramic .01 uF ±20% 100V
A4C21	10000-11	Ceramic .01 uF ±20% 100V
A4C22	10000-11	Ceramic .01 uF ±20% 100V
A4C23	10787-3	Tantalum 27 uF ±20% 20VDC
A4C24	10000-3	Ceramic 470 pF ±20% 1000V
A4C25	10000-11	Ceramic .01 uF ±20% 100V
A4C26	10000-11	Ceramic .01 uF ±20% 100V
A4C27	10001-1	Ceramic 2.2 pF ±5% 1000V
A4C28	10001-6	Ceramic 47 pF ±20% 1000V
A4C29	10000-3	Ceramic 470 pF ±20% 100V
A4C30	10000-4	Ceramic .001 uF ±20% 100V
A4C31	10000-1	Ceramic 100 pF ±20% 1000V
A4C32	10000-1	Ceramic 100 pF ±20% 1000V
A4C33	10000-1	Ceramic 100 pF ±20% 1000V
A4C34	10000-1	Ceramic 100 pF ±20% 1000V
A4C35	10000-1	Ceramic 100 pF ±20% 1000V

CIRCUIT REFERENCE	PM PART NO.	DESCRIPTION
A4CR1	14649	MDA104A
A4CR2	10043	IN4148
A4CR3	10885	IN957B (Standard)
A4CR4	10043	IN4148
A4CR5	10885	IN957B (Standard)
A4CR6	10043	IN4148
A4CR7	10043	IN4148
A4CR8	10043	IN4148
A4CR9	10043	IN4148
A4CR10	10043	IN4148
A4CR11	10043	IN4148
A4CR12	10044-2	IN4385
A4CR13	10043	IN4148
A4CR14	10043	IN4148
A4CR15	10043	IN4148
A4CR16	10043	IN4148
A4J1	14514-1	Post .025 Square
A4J2	14514-1	Post .025 Square
A4J3	14514-1	Post .025 Square
A4J4	14514-1	Post .025 Square
A4J5	14514-1	Post .025 Square
A4J6	14514-1	Post .025 Square
A4J7	14514-1	Post .025 Square
A4J8	14514-1	Post .025 Square
A4J9	14514-1	Post .025 Square
A4J10	14320-2	Test Jack
A4J11	14320-2	Test Jack
A4J12	14320-2	Test Jack
A4J13	14320-2	Test Jack
A4J14	14320-2	Test Jack
A4J15	14320-2	Test Jack
A4J16	14320-2	Test Jack
A4J17	14320-2	Test Jack
A4J18	14320-2	Test Jack
A4J19	14320-2	Test Jack
A4J20	14320-2	Test Jack
A4Q1	10023	PN3644
A4Q2	13638	SE7056
A4Q3	13638	SE7056
A4Q4	13638	SE7056
A4Q5	13638	SE7056
A4Q6	13638	SE7056
A4Q7	13638	SE7056
A4R1	10013-9	Carbon Film 47 Ohm ±5% ¼W
A4R2	12449-37	Metal Film 20.00K Ohm ±.1% 1/8W
A4R3	12449-21	Metal Film 10.00K Ohm ±.1% 1/8W
A4R4	12449-21	Metal Film 10.00K Ohm ±.1% 1/8W
A4R5	12449-37	Metal Film 20.00K Ohm ±.1% 1/8W
A4R6	10013-9	Carbon Film 47 Ohm ±5% ¼W
A4R7	12449-16	Metal Film 150.00K Ohm ±.1% 1/8W
A4R8	10013-25	Carbon Film 1K Ohm ±5% ¼W
A4R9	12449-18	Metal Film 7.500K Ohm ±.1% 1/8W
A4R10	10015-206	Metal Film 7.50K Ohm ±1% 1/8W
A4R11	10015-210	Metal Film 150K Ohm ±1% 1/8W
A4R12	12449-37	Metal Film 20.00K Ohm ±.1% 1/8W
A4R13	12449-21	Metal Film 10.00K Ohm ±.1% 1/8W
A4R14	10046-10	Variable Comp 100K Ohm ±20% ¼W
A4R15	10013-69	Carbon Comp 4.7M Ohm ±5% ¼W
A4R16	12449-21	Metal Film 10.00K Ohm ±.1% 1/8W
A4R17	12449-37	Metal Film 20.00K Ohm ±.1% 1/8W
A4R18	10013-25	Carbon Film 1K Ohm ±5% ¼W
A4R19	12449-16	Metal Film 150.0K Ohm ±.1% 1/8W
A4R20	12449-18	Metal Film 7.500K Ohm ±.1% 1/8W
A4R21	10015-206	Metal Film 7.50K Ohm ±1% 1/8W
A4R22	10015-210	Metal Film 150K Ohm ±1% 1/8W
A4R23	12449-37	Metal Film 20.00K Ohm ±.1% 1/8W
A4R24	12449-21	Metal Film 10.00K Ohm ±.1% 1/8W
A4R25	12449-21	Metal Film 10.00K Ohm ±.1% 1/8W
A4R26	12449-37	Metal Film 20.00K Ohm ±.1% 1/8W
A4R27	12449-16	Metal Film 150.0K Ohm ±.1% 1/8W
A4R28	12449-18	Metal Film 7.500K Ohm ±.1% 1/8W
A4R29	10015-206	Metal Film 7.50K Ohm ±1% ¼W
A4R30	10015-210	Metal Film 150K Ohm ±1% ¼W
A4R31	10013-37	Carbon Film 10K Ohm ±5% ¼W
A4R32	10013-49	Carbon Film 100K Ohm ±5% ¼W
A4R33	10013-37	Carbon Film 10K Ohm ±5% ¼W
A4R34	10013-49	Carbon Film 100K Ohm ±5% ¼W
A4R35	10013-25	Carbon Film 1K Ohm ±5% ¼W
A4R36	10013-25	Carbon Film 1K Ohm ±5% ¼W
A4R37	10013-37	Carbon Film 10K Ohm ±5% ¼W
A4R38	10013-37	Carbon Film 10K Ohm ±5% ¼W
A4R39	10013-49	Carbon Film 100K Ohm ±5% ¼W
A4R40	10013-41	Carbon Film 22K Ohm ±5% ¼W
A4R41	10013-41	Carbon Film 22K Ohm ±5% ¼W
A4R42	10013-37	Carbon Film 10K Ohm ±5% ¼W
A4R43	10013-9	Carbon Film 47 Ohm ±5% ¼W
A4R44	10013-41	Carbon Film 22K Ohm ±5% ¼W
A4R45	10013-25	Carbon Film 1K Ohm ±5% ¼W
A4R46	---	Not Used
A4R47	10013-9	Carbon Film 47 Ohm ±5% ¼W
A4R48	10046-3	Variable Comp 50K Ohm ±20% ¼W
A4R49	10013-39	Carbon Film 15K Ohm ±5% ¼W
A4R50	10046-2	Variable Comp 20K Ohm ±20% ¼W
A4R51	10013-38	Carbon Film 12K Ohm ±5% ¼W
A4R52	10013-41	Carbon Film 22K Ohm ±5% ¼W
A4R53	10013-37	Carbon Film 10K Ohm ±5% ¼W
A4R54	10013-37	Carbon Film 10K Ohm ±5% ¼W
A4R55	10013-25	Carbon Film 1K Ohm ±5% ¼W
A4R56	10013-25	Carbon Film 1K Ohm ±5% ¼W
A4R57	12449-21	Metal Film 10.00K Ohm ±.1% 1/8W
A4R58	10013-9	Carbon Film 47 Ohm ±5% ¼W
A4R59	12449-33	Metal Film 100.0K Ohm ±.1% 1/8W
A4R60	12449-33	Metal Film 100.0K Ohm ±.1% 1/8W
A4R61	12449-21	Metal Film 10.00K Ohm ±.1% 1/8W
A4R62	10013-9	Carbon Film 47 Ohm ±5% ¼W
A4R63	12449-21	Metal Film 10.00K Ohm ±.1% 1/8W
A4R64	10013-9	Carbon Film 47 Ohm ±5% ¼W
A4R65	10013-9	Carbon Film 47 Ohm ±5% ¼W
A4R66	12449-33	Metal Film 100.0K Ohm ±1% 1/8W
A4R67	12449-33	Metal Film 100.0K Ohm ±.1% 1/8W
A4R68	12449-21	Metal Film 10.00K Ohm ±.1% 1/8W
A4R69	10015-207	Metal Film 20.0K Ohm ±1% 1/8W
A4R70	10013-9	Carbon Film 47 Ohm ±5% ¼W
A4R71	10013-9	Carbon Film 47 Ohm ±5% ¼W
A4R72	11845-5	Metal Glaze 36K Ohm ±10% 2W
A4R73	11845-5	Metal Glaze 36K Ohm ±10% 2W
A4R74	10013-9	Carbon Film 47 Ohm ±5% ¼W
A4R75	10013-25	Carbon Film 1K Ohm ±5% ¼W
A4R76	10013-9	Carbon Film 47 Ohm ±5% ¼W
A4R77	10046-8	Variable Comp 10K Ohm ±20% ¼W
A4R78	10015-207	Metal Film 20.0K Ohm ±1% 1/8W
A4R79	10015-7	Metal Film 10.00K Ohm ±1% 1/8W
A4R80	10013-9	Carbon Film 47 Ohm ±5% ¼W
A4R81	10015-102	Metal Film 249K Ohm ±1% 1/8W

CIRCUIT REFERENCE	PM PART NO.	DESCRIPTION
A4R82	10013-9	Carbon Film 47 Ohm ±5% ¼W
A4R83	10015-19	Metal Film 1.00K Ohm ±1% 1/8W
A4R84	10015-19	Metal Film 1.00K Ohm ±1% 1/8W
A4R85	10046-3	Variable Comp 50K Ohm ±20% ¼W
A4R86	---	Not Used
A4R87	10013-1	Carbon Film 10 Ohm ±5% ¼W
A4R88	10046-8	Variable Comp 10K Ohm ±20% ¼W
A4R89	10015-62	Metal Film 200K Ohm ±1% 1/8W
A4R90	10013-38	Carbon Film 12K Ohm ±5% ¼W
A4R91	10015-62	Metal Film 200K Ohm ±1% 1/8W
A4R92	10015-30	Metal Film 7.68K Ohm ±1% 1/8W
A4R93	10015-133	Metal Film 49.9K Ohm ±1% 1/8W
A4R94	10015-7	Metal Film 10.0K Ohm ±1% 1/8W
A4R95	10015-13	Metal Film 100K Ohm ±1% 1/8W
A4R96	10046-3	Variable Comp 50K Ohm ±20% ¼W
A4R97	10015-205	Metal Film 768 Ohm ±1% 1/8W
A4R98	10015-30	Metal Film 7.68K Ohm ±1% 1/8W
A4R99	10013-75	Carbon Film 3K Ohm ±5% ¼W
A4R100	---	Not Used
A4R101	10015-256	Metal Film 1.50K Ohm ±1% 1/8W
A4R102	10015-205	Metal Film 768 Ohm ±1% 1/8W
A4R103	12449-30	Metal Film 30.00K Ohm ±.1% 1/8W
A4R104	12449-30	Metal Film 30.00K Ohm ±.1% 1/8W
A4R105	10013-57	Carbon Film 470K Ohm ±5% ¼W
A4R106	10013-13	Carbon Film 100 Ohm ±5% ¼W
A4R107	10013-25	Carbon Film 1K Ohm ±5% ¼W
A4R108	10013-25	Carbon Film 1K Ohm ±5% ¼W
A4R109	10013-13	Carbon Film 100 Ohm ±5% ¼W
A4R110	---	Not Used
A4R111	---	Not Used
A4R112	10013-43	Carbon Film 33K Ohm ±5% ¼W
A4R113	10013-37	Carbon Film 10K Ohm ±5% ¼W
A4R114	12449-45	Metal Film 250.0K Ohm ±.1% 1/8W
A4R115	12449-30	Carbon Film 30.00K Ohm ±.1% 1/8W
A4R116	10633-1	Carbon Film 1.0 Ohm ±5% 1W
A4R117	12449-66	Metal Film 31.50K Ohm ±.1% 1/8W
A4R118	14877-1	Metal Glaze 22K Ohm ±10% 3W
A4R119	10013-49	Carbon Film 100K Ohm ±5% ¼W
A4R120	10013-9	Carbon Film 47 Ohm ±5% ¼W
A4R121	10013-25	Carbon Film 1K Ohm ±5% ¼W
A4R122	10013-29	Carbon Film 2.2K Ohm ±5% ¼W
A4R123	10013-29	Carbon Film 2.2K Ohm ±5% ¼W
A4R124	10015-19	Metal Film 1.00K Ohm ±1% 1/8W
A4R125	10015-19	Metal Film 1.00K Ohm ±1% 1/8W
A4R126	10013-9	Carbon Film 47 Ohm ±5% ¼W
A4R127	10013-9	Carbon Film 47 Ohm ±5% ¼W
A4R128	10013-9	Carbon Film 47 Ohm ±5% ¼W
A4R129	11845-5	Metal Glaze 36K Ohm ±10% 2W
A4R130	11845-5	Metal Glaze 36K Ohm ±10% 2W
A4R131	10013-9	Carbon Film 47 Ohm ±5% ¼W
A4R132	10013-45	Carbon Film 47K Ohm ±5% ¼W
A4R133	10013-13	Carbon Film 100 Ohm ±5% ¼W
A4R134	10013-45	Carbon Film 47K Ohm ±5% ¼W
A4R135	10013-13	Carbon Film 100 Ohm ±5% ¼W
A4R136	10013-61	Carbon Film 1M Ohm ±5% ¼W
A4R137	10015-7	Metal Film 10.0K Ohm ±1% 1/8W
A4R138	10015-45	Metal Film 499K Ohm ±1% 1/8W
A4R139	10665-8	Carbon Comp 100K Ohm ±5% 1W
A4R140	10015-191	Metal Film 66.5K Ohm ±1% 1/8W
A4R141	10015-7	Metal Film 10.0K Ohm ±1% 1/8W
A4R142	10013-25	Carbon Film 1K Ohm ±5% ¼W
A4R143	10015-102	Metal Film 249K Ohm ±1% 1/8W
A4R144	10015-262	Metal Film 232K Ohm ±1% 1/8W
A4R145	10046-12	Variable Comp 500K Ohm ±20% ¼W
A4R146	10013-57	Carbon Film 470K Ohm ±5% ¼W
A4R147	10013-61	Carbon Film 1M ±5% ¼W
A4R148	10046-12	Variable Comp 500K Ohm ±20% ¼W

CIRCUIT REFERENCE	PM PART NO.	DESCRIPTION
A4U1	14624	TL072CP
A4U2	14629	LF13331
A4U3	14629	LF13331
A4U4	14631	MM74C02
A4U5	14637	CD4002AE
A4U6	14631	MM74C02
A4U7	14632	MM74C04
A4U8	14624	TL072CP
A4U9	14226	TL074CN
A4U10	14226	TL074CN
A4U11	14624	TL072CP
A4U12	14630	MM74C00N
A4U13	14633	MM74C76N
A4U14	14624	TL072CP
A4U15	14635	LM3146N
A4U16	14635	LM3146N
		HIGH VOLTAGE PC BOARD ASSEMBLY - 14095
A5C1	10007-14	Mylar 0.33 uF ±10% 200VDC
A5C2	11501-2	Ceramic 0.1 uF ±20% 50V
A5C3	10003-5	Elect. 100 uF +50% -10% 35VDC
A5C4	10003-5	Elect. 100 uF +50% -10% 35VDC
A5C5	14116-3	Ceramic .005 uF +50% -10% 3KV
A5C6	14116-3	Ceramic .005 uF +50% -10% 3KV
A5C7	14116-3	Ceramic .005 uF +50% -10% 3KV
A5C8	14116-3	Ceramic .005 uF +50% -10% 3KV
A5C9	14116-3	Ceramic .005 uF +50% -10% 3KV
A5C10	---	Not Used
A5C11	14116-3	Ceramic .005 uF +50% -10% 3KV
A5C12	10000-3	Ceramic 470 pF ±20% 1K VDC
A5CR1	14648	FM50
A5CR2	14648	FM50
A5CR3	14648	FM50
A5CR4	10043	IN4148
A5CR5	10044-2	IN4385
A5CR6	10044-2	IN4385
A5DS1	10462	Lamps NE-2H(C2A)
A5DS2	10462	Lamps NE-2H(C2A)
A5J1	14514-1	Post .025 Square
A5J2	14514-1	Post .025 Square
A5J3	10140-4	Test Point, Blue
A5J4	10140-1	Test Point, Red
A5P1	14687	Connector, CRT Anode
A5Q1	14647	2N6487

CIRCUIT REFERENCE	PM PART NO.	DESCRIPTION
A5R1	10241-5	Carbon Comp 1.0 Ohm ±5% ½W
A5R2	10241-9	Carbon Comp 2.0 Ohm ±5% ½W
A5R3	10013-49	Carbon Film 100K Ohm ±5% ¼W
A5R4	10013-49	Carbon Film 100K Ohm ±5% ¼W
A5R5	10665-7	Carbon Comp 10M Ohm ±10% 1W
A5R6	10665-7	Carbon Comp 10M Ohm ±10% 1W
A5R7	10665-7	Carbon Comp 10M Ohm ±10% 1W
A5R8	10013-49	Carbon Film 100K Ohm ±5% ¼W
A5R9	10013-41	Carbon Film 22K Ohm ±5% ¼W
A5R10	10013-49	Carbon Film 100K Ohm ±5% ¼W
A5R11	10633-3	Wire Wound .36M ±5% 1W
A5R12	14662-1	Metal Oxide 25.0M Ohm ±1% 1W
A5R13	14941-1	Carbon Comp 3.3M Ohm ±5% 1W
A5R14	10046-14	Variable Comp 2M Ohm ±20% ¼W
A5R15	14941-3	Carbon Comp 4.7M Ohm ±5% 1W
A5R16	14941-2	Carbon Comp 3.9M Ohm ±5% 1W
A5T1	13859	Coil, High Voltage
	14525	Coil, Heater
	14752	Spacer, Fiberglass
	14627	U-Bolt
	14626	U-Core
		MEMORY PC BOARD ASSEMBLY - 14214
A6C1	11501-2	Ceramic 0.1 uF ±20% 50V
A6C2	11501-2	Ceramic 0.1 uF ±20% 50V
A6C3	11501-2	Ceramic 0.1 uF ±20% 50V
A6C4	11501-2	Ceramic 0.1 uF ±20% 50V
A6C5	11501-2	Ceramic 0.1 uF ±20% 50V
A6C6	11501-2	Ceramic 0.1 uF ±20% 50V
A6C7	10909-2	Mica 470 pF ±1% 500V
A6C8	10000-4	Ceramic .001 uF ±20% 1000V
A6C9	11501-2	Ceramic 0.1 uF ±20% 100V
A6C10	---	Not Used
A6C11	11501-2	Ceramic 0.1 uF ±20% 50V
A6C12	10000-8	Ceramic .022 uF ±20% 500V
A6C13	11501-2	Ceramic 0.1 uF ±20% 50V
A6C14	11501-2	Ceramic 0.1 uF ±20% 50V
A6C15	11501-2	Ceramic 0.1 uF ±20% 50V
A6C16	11501-2	Ceramic 0.1 uF ±20% 50V
A6C17	10787-2	Tantalum 12 uF ±20% 20V
A6C18	10000-5	Ceramic .0022 uF ±20% 500V
A6C19	10787-5	Tantalum 1.0 uF ±20% 15V
A6C20	10000-6	Ceramic .0047 uF ±20% 500V
A6C21	11501-2	Ceramic 0.1 uF ±20% 50V
A6C22	11501-2	Ceramic 0.1 uF ±20% 50V
A6C23	10787-2	Tantalum 12 uF ±20% 20V
A6C24	10000-4	Ceramic .001 uF ±20% 1000V
A6C25	10909-2	Mica 470 pF ±1% 500V
A6C26	10909-2	Mica 470 pF ±1% 500V
A6C27	---	Not Used
A6C28	11501-2	Ceramic 0.1 uF ±20% 50V
A6C29	11501-2	Ceramic 0.1 uF ±20% 50V
A6C30	11501-2	Ceramic 0.1 uF ±20% 50V
A6C31	10000-11	Ceramic .01 uF ±20% 100V
A6C32	11501-2	Ceramic 0.1 uF ±20% 50V
A6C33	11501-2	Ceramic 0.1 uF ±20% 50V
A6C34	11501-2	Ceramic 0.1 uF ±20% 50V
A6C35	---	Not Used
A6C36	10000-11	Ceramic .01 uF ±20% 100V
A6C37	11501-2	Ceramic 0.1 uF ±20% 50V
A6C38	11501-2	Ceramic 0.1 uF ±20% 50V
A6C39	10001-3	Ceramic 10 pF ±5% 1000V
A6C40	10909-3	Mica 390 pF ±1% 500V
A6C41	11501-2	Ceramic 0.1 uF ±20% 50V
A6C42	11501-2	Ceramic 0.1 uF ±20% 50V
A6C43	10001-3	Ceramic 10 pF ±5% 1000V
A6C44	10581-1	Variable Ceramic 2-8 pF NPO
A6C45	10909-2	Mica 470 pF ±1% 500V
A6C46	10007-1	Mylar .001 uF ±10% 200V
A6C47	10000-1	Ceramic 100 pF ±20% 1000V
A6C48	---	Not Used
A6C49	---	Not Used
A6C50	10000-1	Ceramic 100 pF ±20% 1000V
A6C51	10000-3	Ceramic 470 pF ±20% 1000V
A6C52	---	Not Used
A6C53	10787-2	Tantalum 12 uF ±20% 20V
A6C54	11501-2	Ceramic 0.1 uF ±20% 50V
A6C55	11501-2	Ceramic 0.1 uF ±20% 50V
A6C56	11501-2	Ceramic 0.1 uF ±20% 50V
A6C57	11501-2	Ceramic 0.1 uF ±20% 50V
A6C58	11501-2	Ceramic 0.1 uF ±20% 50V
A6C59	11501-2	Ceramic 0.1 uF ±20% 50V
A6C60	11501-2	Ceramic 0.1 uF ±20% 50V
A6C61	11501-2	Ceramic 0.1 uF ±20% 50V
A6C62	11501-2	Ceramic 0.1 uF ±20% 50V
A6C63	11501-2	Ceramic 0.1 uF ±20% 50V
A6C64	11501-2	Ceramic 0.1 uF ±20% 50V
A6C65	11501-2	Ceramic 0.1 uF ±20% 50V
A6C66	11501-2	Ceramic 0.1 uF ±20% 50V
A6C67	11501-2	Ceramic 0.1 uF ±20% 50V
A6C68	11501-2	Ceramic 0.1 uF ±20% 50V
A6C69	10787-5	Tantalum 1.0 uF ±20% 15V
A6C70	10787-5	Tantalum 1.0 uF ±20% 15V
A6C71	10787-5	Tantalum 1.0 uF ±20% 15V
A6C72	11501-2	Ceramic 0.1 uF ±20% 50V
A6C73	10787-5	Tantalum 1.0 uF ±20% 15V
A6C74	10787-5	Tantalum 1.0 uF ±20% 15V
A6C75	10787-5	Tantalum 1.0 uF ±20% 15V
A6C76	10000-4	Ceramic .001 uF ±20% 1000V
A6CR1	10043	IN4148
A6CR2	10043	IN4148
A6CR3	10043	IN4148
A6CR4	10043	IN4148
A6CR5	10043	IN4148
A6CR6	10043	IN4148
A6CR7	10043	IN4148
A6CR8	10043	IN4148
A6CR9	10043	IN4148
A6CR10	10043	IN4148
A6J1	14514-1	Post .025 Square
A6J2	14514-1	Post .025 Square
A6J3	14514-1	Post .025 Square
A6J4	14320-2	Test Jack
A6J5	14320-2	Test Jack
A6J6	14320-2	Test Jack
A6J7	14320-2	Test Jack
A6J8	14320-2	Test Jack
A6J9	14320-2	Test Jack
A6J10	14320-2	Test Jack
A6J11	14320-2	Test Jack
A6J12	14320-2	Test Jack

CIRCUIT REFERENCE	PM PART NO.	DESCRIPTION
A6J13	14320-2	Test Jack
A6J14	14320-2	Test Jack
A6J15	14320-2	Test Jack
A6J16	14320-2	Test Jack
A6J17	14320-2	Test Jack
A6J18	14320-2	Test Jack
A6J19	14320-2	Test Jack
A6J20	14320-2	Test Jack
A6J21	14320-2	Test Jack
A6J22	14320-2	Test Jack
A6J23	14320-2	Test Jack
A6J24	14320-2	Test Jack
A6J25	14320-2	Test Jack
A6J26	14320-2	Test Jack
A6J27	14320-2	Test Jack
A6L1	10631-7	Coil, RF 68 uH ±10%
A6Q1	10017	2N3569
A6Q2	12591	J112-18
A6Q3	12591	J112-18
A6Q4	10018	2N3646
A6Q5	11507	TIS97
A6Q6	10018	2N3646
A6R1	14882-1	Network 10K Ohm ±2% 125MW
A6R2	14882-1	Network 10K Ohm ±2% 125MW
A6R3	10013-21	Carbon Film 470 Ohm ±5% ¼W
A6R4	10013-37	Carbon Film 10K Ohm ±5% ¼W
A6R5	10013-37	Carbon Film 10K Ohm ±5% ¼W
A6R6	10013-37	Carbon Film 10K Ohm ±5% ¼W
A6R7	10013-37	Carbon Film 10K Ohm ±5% ¼W
A6R8	10013-37	Carbon Film 10K Ohm ±5% ¼W
A6R9	10013-25	Carbon Film 1K Ohm ±5% ¼W
A6R10	10013-28	Carbon Film 1.8K Ohm ±5% ¼W
A6R11	10015-68	Metal Film 100 Ohm ±1% 1/8W
A6R12	10013-25	Carbon Film 1K Ohm ±5% ¼W
A6R13	10013-25	Carbon Film 1K Ohm ±5% ¼W
A6R14	10013-9	Carbon Film 47 Ohm ±5% ¼W
A6R15	10013-9	Carbon Film 47 Ohm ±5% ¼W
A6R16	10013-25	Carbon Film 1K Ohm ±5% ¼W
A6R17	10015-206	Metal Film 7.50K Ohm ±1% 1/8W
A6R18	10013-29	Carbon Film 2.2K Ohm ±5% ¼W
A6R19	10013-29	Carbon Film 2.2K Ohm ±5% ¼W
A6R20	10013-28	Carbon Film 1.8K Ohm ±5% ¼W
A6R21	10013-28	Carbon Film 1.8K Ohm ±5% ¼W
A6R22	10013-37	Carbon Film 10K Ohm ±5% ¼W
A6R23	10013-13	Carbon Film 100 Ohm ±5% ¼W
A6R24	---	Not Used
A6R25	10013-18	Carbon Film 270 Ohm ±5% ¼W
A6R26	10013-37	Carbon Film 10K Ohm ±5% ¼W
A6R27	10013-21	Carbon Film 470 Ohm ±5% ¼W
A6R28	10013-73	Carbon Film 10M Ohm ±5% ¼W
A6R29	10013-9	Carbon Film 47 Ohm ±5% ¼W
A6R30	10013-9	Carbon Film 47 Ohm ±5% ¼W
A6R31	10013-17	Carbon Film 220 Ohm ±5% ¼W
A6R32	10013-9	Carbon Film 47 Ohm ±5% ¼W
A6R33	10013-9	Carbon Film 47 Ohm ±5% ¼W
A6R34	10013-25	Carbon Film 1K Ohm ±5% ¼W
A6R35	10013-27	Carbon Film 1.5K Ohm ±5% ¼W
A6R36	10013-65	Carbon Film 2.2M Ohm ±5% ¼W
A6R37	10015-260	Metal Film 221K Ohm ±1% 1/8W
A6R38	10013-25	Carbon Film 1K Ohm ±5% ¼W
A6R39	10015-114	Metal Film 75.0K Ohm ±1% 1/8W
A6R40	10013-41	Carbon Film 22K Ohm ±5% ¼W
A6R41	10013-37	Carbon Film 10K Ohm ±5% ¼W
A6R42	10013-9	Carbon Film 47 Ohm ±5% ¼W
A6R43	10013-9	Carbon Film 47 Ohm ±5% ¼W
A6R44	10013-37	Carbon Film 10K Ohm ±5% ¼W
A6R45	10013-37	Carbon Film 10K Ohm ±5% ¼W
A6R46	10015-114	Metal Film 75.0K Ohm ±1% 1/8W
A6R47	10015-72	Metal Film 1.96K Ohm ±1% 1/8W
A6R48	10046-1	Variable Comp 500 Ohm ±20% ¼W
A6R49	10634-3	Metal Film 1.00M Ohm ±1% ½W
A6R50	10015-114	Metal Film 75.0K Ohm ±1% 1/8W
A6R51	12449-73	Metal Film 10.20K Ohm ±0.1% 1/8W
A6R52	12449-30	Metal Film 30.00K Ohm ±0.1% 1/8W
A6R53	10013-45	Carbon Film 47K Ohm ±5% ¼W
A6R54	10013-37	Carbon Film 10K Ohm ±5% ¼W
A6R55	10013-28	Carbon Film 1.8K Ohm ±5% ¼W
A6R56	10013-28	Carbon Film 1.8K Ohm ±5% ¼W
A6R57	10015-48	Metal Film 27.4K Ohm ±1% 1/8W
A6R58	10015-7	Metal Film 10.0K Ohm ±1% 1/8W
A6R59	10013-13	Carbon Film 100 Ohm ±5% ¼W
A6R60	10013-9	Carbon Film 47 Ohm ±5% ¼W
A6R61	10013-9	Carbon Film 47 Ohm ±5% ¼W
A6R62	12449-65	Metal Film 2.200K Ohm ±0.1% 1/8W
A6R63	12449-18	Metal Film 7.500K Ohm ±0.1% 1/8W
A6R64	12449-18	Metal Film 7.500K Ohm ±0.1% 1/8W
A6R65	12449-65	Metal Film 2.200K Ohm ±0.1% 1/8W
A6R66	10013-9	Carbon Film 47 Ohm ±5% ¼W
A6R67	10013-9	Carbon Film 47 Ohm ±5% ¼W
A6R68	10013-25	Carbon Film 1K Ohm ±5% ¼W
A6R69	10013-61	Carbon Film 1M Ohm ±5% ¼W
A6R70	---	Not Used
A6R71	---	Not Used
A6R72	12449-18	Metal Film 7.500K Ohm ±0.1% 1/8W
A6R73	12449-18	Metal Film 7.500K Ohm ±0.1% 1/8W
A6R74	12449-65	Metal Film 2.200K Ohm ±0.1% 1/8W
A6R75	12449-65	Metal Film 2.200K Ohm ±0.1% 1/8W
A6R76	10015-7	Metal Film 10.0K Ohm ±1% 1/8W
A6R77	---	Not Used
A6R78	---	Not Used
A6R79	---	Not Used
A6R80	10013-45	Carbon Film 47K Ohm ±5% ¼W
A6R81	10013-37	Carbon Film 10K Ohm ±5% ¼W
A6R82	10013-33	Carbon Film 4.7K Ohm ±5% ¼W
A6R83	10013-9	Carbon Film 47 Ohm ±5% ¼W
A6R84	10013-9	Carbon Film 47 Ohm ±5% ¼W
A6R85	10015-119	Metal Film 34.8K Ohm ±1% 1/8W
A6R86	10046-10	Variable Comp 100K Ohm ±20% ¼W
A6R87	10015-219	Metal Film 261K Ohm ±1% 1/8W
A6R88	10015-36	Metal Film 5.11K Ohm ±1% 1/8W
A6R89	10015-36	Metal Film 5.11K Ohm ±1% 1/8W
A6R90	10015-219	Metal Film 261K Ohm ±1% 1/8W
A6R91	---	Not Used
A6R92	---	Not Used
A6R93	10015-7	Metal Film 10.0K Ohm ±1% 1/8W
A6R94	10013-30	Carbon Film 2.7K Ohm ±5% ¼W
A6R95	---	Not Used
A6R96	---	Not Used
A6R97	10013-13	Carbon Film 100 Ohm ±5% ¼W
A6R98	10013-29	Carbon Film 2.2K Ohm ±5% ¼W
A6R99	10013-28	Carbon Film 1.8K Ohm ±5% ¼W
A6R100	10013-28	Carbon Film 1.8K Ohm ±5% ¼W
A6R101	---	Not Used
A6R102	---	Not Used
A6R103	10013-21	Carbon Film 470 Ohm ±5% ¼W
A6R104	10013-21	Carbon Film 470 Ohm ±5% ¼W

CIRCUIT REFERENCE	PM PART NO.	DESCRIPTION
A6U1	14641	8255A
A6U2	13470-42	SN74LS365N
A6U3	13470-42	SN74LS365N
A6U4	23470-43	SN74LS374N
A6U5	---	Not Used
A6U6	---	Not Used
A6U7	13470-42	SN74LS365N
A6U8	13470-42	SN74LS365N
A6U9	13470-43	SN74LS374N
A6U10	14640	P2114
A6U11	14640	P2114
A6U12	13470-41	SN74LS163N
A6U13	13470-46	SN74LS161AN
A6U14	13470-24	SN74LS132N
A6U15	13470-40	SN74LS125N
A6U16	14639	P2102A
A6U17	13470-41	SN74LS163N
A6U18	13470-46	SN74LS161AN
A6U19	13470-13	SN74LS74N
A6U20	13470-4	SN74LS04N
A6U21	13470-39	SN74LS11N
A6U22	13470-41	SN74LS163N
A6U23	13470-46	SN74LS161AN
A6U24	13470-4	SN74LS04N
A6U25	13470-13	SN74LS74N
A6U26	13470-39	SN74LS11N
A6U27	13470-41	SN74LS163N
A6U28	13470-1	SN74LS00N
A6U29	13470-5	SN74LS08N
A6U30	13470-13	SN74LS74N
A6U31	13470-4	SN74LS04N
A6U32	13470-5	SN74LS08N
A6U33	13470-1	SN74LS00N
A6U34	14142	DM2503N
A6U35	13470-17	SN74LS123N
A6U36	13470-13	SN74LS74N
A6U37	13470-13	SN74LS74N
A6U38	13470-13	SN74LS74N
A6U39	14644	DAC08CQ
A6U40	14644	DAC08CQ
A6U41	13470-17	SN74LS123N
A6U42	14634	LM311N
A6U43	14634	LM311N
A6U44	14645	AD561JD
A6U45	14226	TL074CP
A6U46	14226	TL074CP
A6U47	---	Not Used
A6U48	14634	LM311N
A6U49	14634	LM311N
A6U50	14226	TL074CP
A6U51	14629	LF13331N
A6Y1	14920	Quartz Crystal 2 MHz
		FRONT PANEL PC BOARD ASSEMBLY - 14413
A7J1	14514-1	Post .025 Square
A7J2	14514-1	Post .025 Square
A7J3	14514-1	Post .025 Square

CIRCUIT REFERENCE	PM PART NO.	DESCRIPTION
A7Q1	10017	2N3569
A7Q2	10023	2N3644
A7R1	10013-16	Carbon Film 180 Ohm ±5% ¼W
A7S1	14656	Pushbutton 4 Stations
		IEEE INDICATOR PC BOARD ASSEMBLY - 14584
A8CR1	14661-1	Diode, Light Emitting (Red)
A8CR2	14661-3	Diode, Light Emitting (Yellow)
A8CR3	14661-2	Diode, Light Emitting (Green)
A8J1	14514-1	Post .025 Square
		IEEE INTERCONNECT PC BOARD ASSEMBLY - 14493
A9J1	12440-4	30 Contacts
A9J2	14514-1	Post .025 Square
		IEEE INTERFACE BUS PC BOARD ASSEMBLY - 14180
A10C1	10000-1	Ceramic 100 pF ±20% 1000V
A10C2	10000-11	Ceramic .01 uF ±20% 100V
A10C3	10000-11	Ceramic .01 uF ±20% 100V
A10C4	10000-11	Ceramic .01 uF ±20% 100V
A10C5	10000-11	Ceramic .01 uF ±20% 100V
A10C6	10000-11	Ceramic .01 uF ±20% 100V
A10C7	10000-11	Ceramic .01 uF ±20% 100V
A10C8	10000-11	Ceramic .01 uF ±20% 100V
A10C9	10000-11	Ceramic .01 uF ±20% 100V
A10C10	10000-11	Ceramic .01 uF ±20% 100V
A10C11	10001-5	Ceramic 33 pF ±5% 1000V
A10C12	10000-11	Ceramic .01 uF ±20% 100V
A10C13	10000-11	Ceramic .01 uF ±20% 100V
A10C14	10000-11	Ceramic .01 uF ±20% 100V
A10C15	10000-1	Ceramic 100 pF ±20% 1000V
A10C16	13979-1	Polycarb. 1.0 uF ±10% 100V
A10C17	13979-1	Polycarb. 1.0 uF ±10% 100V
A10C18	10000-11	Ceramic .01 uF ±20% 100V
A10C19	10000-11	Ceramic .01 uF ±20% 100V
A10C20	10000-11	Ceramic .01 uF ±20% 100V
A10C21	10000-11	Ceramic .01 uF ±20% 100V
A10C22	10000-11	Ceramic .01 uF ±20% 100V
A10C23	10000-11	Ceramic .01 uF ±20% 100V
A10C24	10787-4	Tantalum 68 uF ±20% 20V
A10C25	---	Not Used
A10C26	---	Not Used
A10C27	10000-11	Ceramic .01 uF ±20% 100V

CIRCUIT REFERENCE	PM PART NO.	DESCRIPTION
A10C28	10000-11	Ceramic .01 uF ±20% 100V
A10C29	10000-11	Ceramic .01 uF ±20% 100V
A10C30	10000-11	Ceramic .01 uF ±20% 100V
A10C31	10000-11	Ceramic .01 uF ±20% 100V
A10C32	10000-11	Ceramic .01 uF ±20% 100V
A10C33	10000-11	Ceramic .01 uF ±20% 100V
A10C34	10000-11	Ceramic .01 uF ±20% 100V
A10C35	10000-11	Ceramic .01 uF ±20% 100V
A10C36	---	Not Used
A10C37	10000-11	Ceramic .01 uF ±20% 100V
A10C38	10787-5	Tantalum 1.0 uF ±20% 15V
A10C39	10787-5	Tantalum 1.0 uF ±20% 15V
A10C40	10787-5	Tantalum 1.0 uF ±20% 15V
A10C41	10787-5	Tantalum 1.0 uF ±20% 15V
A10C42	---	Not Used
A10C43	10000-4	Ceramic .001 uF ±20% 1000V
A10C44	10000-1	Ceramic 100 pF ±20% 1000V
A10C45	10000-1	Ceramic 100 pF ±20% 1000V
A10C46	10000-1	Ceramic 100 pF ±20% 1000V
A10C47	10000-1	Ceramic 100 pF ±20% 1000V
A10C48	10000-1	Ceramic 100 pF ±20% 1000V
A10C49	10000-11	Ceramic .01 uF ±20% 100V
A10C50	10000-11	Ceramic .01 uF ±20% 100V
A10C51	10001-11	Ceramic 25 pF ±5% 1000V
A10C52	10001-11	Ceramic 25 pF ±5% 1000V
A10C53	10000-11	Ceramic .01 uF ±20% 100V
A10CR1	10043	IN4148
A10CR2	10043	IN4148
A10CR3	10043	IN4148
A10CR4	10043	IN4148
A10CR5	10043	IN4148
A10CR6	10043	IN4148
A10CR7	---	Not Used
A10CR8	---	Not Used
A10CR9	12389	MV5025
A10CR10	10043	IN4148
A10CR11	10043	IN4148
A10CR12	10043	IN4148
A10J1	14514-1	Post .025 Square
A10J2	14664	Right Angle 24 Pin
A10J3	14320-2	Test Jack
A10J4	14320-2	Test Jack
A10J5	14320-2	Test Jack
A10J6	14320-2	Test Jack
A10J7	14320-2	Test Jack
A10J8	14320-2	Test Jack
A10J9	14320-2	Test Jack
A10J10	14320-2	Test Jack
A10J11	14320-2	Test Jack
A10J12	14320-2	Test Jack
A10J13	14320-2	Test Jack
A10J14	14320-2	Test Jack
A10J15	14320-2	Test Jack
A10J16	14320-2	Test Jack
A10J17	14320-2	Test Jack
A10J18	14320-2	Test Jack
A10J19	14320-2	Test Jack
A10J20	14320-2	Test Jack
A10J21	14320-2	Test Jack
A10J22	14320-2	Test Jack

CIRCUIT REFERENCE	PM PART NO.	DESCRIPTION
A10J23	14320-2	Test Jack
A10J24	14320-2	Test Jack
A10J25	14320-2	Test Jack
A10J26	14320-2	Test Jack
A10Q1	10017	2N3569
A10Q2	10017	2N3569
A10Q3	10017	2N3569
A10Q4	10017	2N3569
A10Q5	10398	2N4121 or PN4917
A10Q6	10018	2N3646
A10R1	12449-21	Metal Film 10.00K Ohm ±0.1% 1/8W
A10R2	12449-15	Metal Film 75.00K Ohm ±0.1% 1/8W
A10R3	12449-21	Metal Film 10.00K Ohm ±0.1% 1/8W
A10R4	12449-15	Metal Film 75.00K Ohm ±0.1% 1/8W
A10R5	12449-28	Metal Film 12.50K Ohm ±0.1% 1/8W
A10R6	10013-37	Carbon Film 10K Ohm ±5% ¼W
A10R7	10013-37	Carbon Film 10K Ohm ±5% ¼W
A10R8	10013-37	Carbon Film 10K Ohm ±5% ¼W
A10R9	12449-15	Metal Film 75.00K Ohm ±0.1% 1/8W
A10R10	10015-7	Metal Film 10.0K Ohm ±1% ¼W
A10R11	10013-73	Carbon Film 10M Ohm ±5% ¼W
A10R12	13300-4	Variable Comp 100K Ohm ±20% ¼W
A10R13	13300-4	Variable Comp 100K Ohm ±20% ¼W
A10R14	10013-69	Carbon Film 4.7M Ohm ±5% ¼W
A10R15	12449-51	Metal Film 2.000K Ohm ±0.1% 1/8W
A10R16	12449-76	Metal Film 9.200K Ohm ±0.1% 1/8W
A10R17	12449-54	Metal Film 1.333K Ohm ±0.1% 1/8W
A10R18	13300-6	Variable Comp 100 Ohm ±20% ¼W
A10R19	12449-21	Metal Film 10.00K Ohm ±0.1% 1/8W
A10R20	13300-6	Variable Comp 100 Ohm ±20% ¼W
A10R21	10013-33	Carbon Film 4.7K Ohm ±5% ¼W
A10R22	10013-37	Carbon Film 10K Ohm ±5% ¼W
A10R23	10013-37	Carbon Film 10K Ohm ±5% ¼W
A10R24	12449-21	Metal Film 10.00K Ohm ±0.1% 1/8W
A10R25	10013-37	Carbon Film 10K Ohm ±5% ¼W
A10R26	10013-37	Carbon Film 10K Ohm ±5% ¼W
A10R27	10013-37	Carbon Film 10K Ohm ±5% ¼W
A10R28	10013-29	Carbon Film 2.2K Ohm ±5% ¼W
A10R29	10013-29	Carbon Film 2.2K Ohm ±5% ¼W
A10R30	10013-9	Carbon Film 47 Ohm ±5% ¼W
A10R31	10013-21	Carbon Film 470 Ohm ±5% ¼W
A10R32	10013-9	Carbon Film 47 Ohm ±5% ¼W
A10R33	10013-21	Carbon Film 470 Ohm ±5% ¼W
A10R34	13300-6	Variable Comp 100 Ohm ±20% ¼W
A10R35	10013-9	Carbon Film 47 Ohm ±5% ¼W
A10R36	10013-9	Carbon Film 47 Ohm ±5% ¼W
A10R37	10013-33	Carbon Film 4.7K Ohm ±5% ¼W
A10R38	---	Not Used
A10R39	---	Not Used
A10R40	---	Not Used
A10R41	---	Not Used
A10R42	10013-65	Carbon Film 2.2M Ohm ±5% ¼W
A10R43	13300-5	Variable Comp 50K Ohm ±20% ¼W
A10R44	---	Not Used
A10R45	10013-33	Carbon Film 4.7K Ohm ±5% ¼W
A10R46	14881-2	Network 1K Ohm ±2% 250MW
A10R47	14881-1	Network 220 Ohm ±2% 250MW
A10R48	10013-37	Carbon Film 10K Ohm ±5% ¼W
A10R49	10013-9	Carbon Film 47 Ohm ±5% ¼W
A10R50	10013-9	Carbon Film 47 Ohm ±5% ¼W
A10R51	10013-80	Carbon Film 2.4K Ohm ±5% ¼W
A10R52	10013-9	Carbon Film 47 Ohm ±5% ¼W

CIRCUIT REFERENCE	PM PART NO.	DESCRIPTION
A10R53	10013-9	Carbon Film 47 Ohm ±5% ¼W
A10R54	12449-21	Metal Film 10.00K Ohm ±0.1% 1/8W
A10R55	12449-51	Metal Film 2.000K Ohm ±0.1% 1/8W
A10R56	13300-6	Variable Comp 100 Ohm ±20% ¼W
A10R57	12449-55	Metal Film 4.000K Ohm ±0.1% 1/8W
A10R58	10013-35	Carbon Film 6.8K Ohm ±5% ¼W
A10R59	10013-71	Carbon Film 6.8M Ohm ±5% ¼W
A10R60	13300-4	Variable Comp 100K Ohm ±20% ¼W
A10R61	13300-6	Variable Comp 100 Ohm ±20% ¼W
A10R62	12449-76	Metal Film 9.200K Ohm ±0.1% 1/8W
A10R63	12449-54	Metal Film 1.333K Ohm ±0.1% 1/8W
A10R64	12449-21	Metal Film 10.00K Ohm ±0.1% 1/8W
A10R65	10013-37	Carbon Film 10K Ohm ±5% ¼W
A10R66	10013-37	Carbon Film 10K Ohm ±5% ¼W
A10R67	10013-71	Carbon Film 6.8M Ohm ±5% ¼W
A10R68	13300-4	Variable Comp 100K Ohm ±20% ¼W
A10R69	12449-21	Metal Film 10.00K Ohm ±0.1% 1/8W
A10R70	---	Not Used
A10R71	10015-90	Metal Film 24.9K Ohm ±1% ¼W
A10R72	10015-7	Metal Film 10.0K Ohm ±1% ¼W
A10R73	10013-25	Carbon Film 1K Ohm ±5% ¼W
A10R74	10013-25	Carbon Film 1K Ohm ±5% ¼W
A10R75	14882-1	Network 10K Ohm ±2% 125MW
A10R76	10013-37	Carbon Film 10K Ohm ±5% ¼W
A10R77	10013-37	Carbon Film 10K Ohm ±5% ¼W
A10R78	10013-37	Carbon Film 10K Ohm ±5% ¼W
A10R79	10013-41	Carbon Film 22K Ohm ±5% ¼W
A10R80	---	Not Used
A10R81	---	Not Used
A10R82	---	Not Used
A10R83	---	Not Used
A10R84	---	Not Used
A10R85	---	Not Used
A10R86	---	Not Used
A10R87	14882-1	Network 10K Ohm ±2% 125MW
A10R88	10013-9	Carbon Film 47 Ohm ±5% ¼W
A10R89	10013-9	Carbon Film 47 Ohm ±5% ¼W
A10R90	10015-90	Metal Film 24.9K Ohm ±1% ¼W
A10R91	10013-61	Carbon Film 1M Ohm ±5% ¼W
A10R92	13300-4	Variable Comp 100K Ohm ±20% ¼W
A10R93	10013-12	Carbon Film 82 Ohm ±5% ¼W
A10R94	12449-21	Metal Film 10.00K Ohm ±0.1% 1/8W
A10R95	12449-31	Metal Film 1.111K Ohm ±0.1% 1/8W
A10R96	10013-5	Carbon Film 22 Ohm ±5% ¼W
A10R97	10013-37	Carbon Film 10K Ohm ±5% ¼W
A10R98	10013-13	Carbon Film 100 Ohm ±5% ¼W
A10R99	10013-31	Carbon Film 3.3K ±5% ¼W
A10R100	10013-13	Carbon Film 100 Ohm ±5% ¼W
A10R101	10013-5	Carbon Film 22 Ohm ±5% ¼W
A10R102	12449-15	Carbon Film 75.00K Ohm ±0.1% 1/8W
A10R103	---	Not Used
A10R104	---	Not Used
A10R105	---	Not Used
A10R106	10013-37	Carbon Film 10K Ohm ±5% ¼W
A10R107	10013-5	Carbon Film 22 Ohm ±5% ¼W
A10R108	10013-5	Carbon Film 22 Ohm ±5% ¼W
A10R109	10013-33	Carbon Film 4.7K Ohm ±5% ¼W
A10R110	10013-17	Carbon Film 220 Ohm ±5% ¼W
A10R111	10013-25	Carbon Film 1K Ohm ±5% ¼W
A10R112	10013-33	Carbon Film 4.7K Ohm ±5% ¼W
A10R113	10013-78	Carbon Film 2K Ohm ±5% ¼W
A10R114	10013-28	Carbon Film 1.8K Ohm ±5% ¼W
A10R115	10013-33	Carbon Film 4.7K Ohm ±5% ¼W
A10S1	14663	Dip, SPST (2 Rocker Arms)
A10S2	14663	Dip, SPST (2 Rocker Arms)
A10S3	14891	Dip, SPST (8 Rocker Arms)
A10S4	14677	Dip, SPST (5 Rocker Arms)

CIRCUIT REFERENCE	PM PART NO.	DESCRIPTION
A10U1	14672	MC8T97P
A10U2	14672	MC8T97P
A10U3	---	Not Used
A10U4	13470-13	SN74LS74N
A10U5	14673	MC3448AP
A10U6	14673	MC3448AP
A10U7	14673	MC3448AP
A10U8	14673	MC3448AP
A10U9	15036	8291
A10U10	14641	8255
A10U11	---	Not Used
A10U12	13470-4	SN74LS04N
A10U13	14670	DM2504N
A10U14	13470-2	SN74LS01N
A10U15	14668	LM319N
A10U16	14226	TL074CN
A10U17	14667	AH5014CN
A10U18	14640	P2114
A10U19	14640	P2114
A10U20	14640	P2114
A10U21	14640	P2114
A10U22	13470-44	SN74LS138N
A10U23	13470-45	SN74LS240N
A10U24	13470-45	SN74LS240N
A10U25	14977-1	2716
A10U26	14977-1	2716
A10U27	13470-46	SN74LS161AN
A10U28	13470-7	SN74LS14N
A10U29	14675	Z80
A10U30	14641	8255
A10U31	14671	AD565JN
A10U32	---	Not Used
A10U33	14226	TL074CN
A10U34	14629	LF13331N
A10U35	14667	AH5014CN
A10U36	14669	LF356N
A10U37	13470-47	SN74LS32N
A10U38	15039	K1148A

PART NO. CROSS REFERENCE		
PM PART NO.	MFGR. CODE	MFGR. PART NO.
10000-1	56289	5GA-T10
10000-3	56289	5GA-T47
10000-4	56289	5GA-D10
10000-5	56289	5GA-D22
10000-6	56289	5GA-D47
10000-8	56289	5GAS-S20
10000-11	72989	805-000-X5VD-103Z
10001-1	56289	10TCC-V22
10001-3	56289	10TCC-Q10
10001-5	56289	10TCC-Q33
10001-6	56289	10TCC-Q47
10001-11	56289	10TCC-Q25
10001-12	56289	10TCC-V33
10003-5	25088	B41283-100/40/8118
10003-16	56289	TVA-1659
10007-1	09214	75FIR2A 102
10007-14	14655	WMF2P33
10013-1	80031	B803104NB 100
10013-5	80031	B803104NB 220
10013-9	80031	B803104NB 470
10013-11	80031	B803104NB 680
10013-12	80031	B803104NB 820
10013-13	80031	B803104NB 101
10013-16	80031	B803104NB 181
10013-17	80031	B803104NB 221
10013-18	80031	B803104NB 271
10013-21	80031	B803104NB 471
10013-25	80031	B803104NB 102
10013-27	80031	B803104NB 152
10013-28	80031	B803104NB 182
10013-29	80031	B803104NB 222
10013-30	80031	B803104NB 272
10013-31	80031	B803104NB 332
10013-33	80031	B803104NB 472
10013-35	80031	B803104NB 682
10013-37	80031	B803104NB 103
10013-38	80031	B803104NB 123
10013-39	80031	B803104NB 153

PART NO. CROSS REFERENCE		
PM PART NO.	MFGR. CODE	MFGR. PART NO.
10013-41	80031	B803104NB 223
10013-43	80031	B803104NB 333
10013-45	80031	B803104NB 473
10013-49	80031	B803104NB 104
10013-57	80031	B803104NB 474
10013-61	80031	B803104NB 105
10013-65	80031	B803104NB 225
10013-69	80031	B803104NB 475
10013-71	80031	B803104NB 685
10013-73	80031	B803104NB 106
10013-75	80031	B803104NB 302
10013-78	01121	RC07GF202J
10013-80	80031	B803104NB 242
10015-7	24546	RN55D 10.0K Ohm 1%
10015-13	24546	RN55D 100K Ohm 1%
10015-19	24546	RN55D 1.0K Ohm 1%
10015-20	24546	RN55D 1.10K Ohm 1%
10015-30	24546	RN55D 7.68K Ohm 1%
10015-36	24546	RN55D 5.11K Ohm 1%
10015-45	24546	RN55D 499K Ohm 1%
10015-48	24546	RN55D 27.4K Ohm 1%
10015-62	24546	RN55D 402K Ohm 1%
10015-65	24546	RN55D 4.99K Ohm 1%
10015-68	24546	RN55D 100 Ohm 1%
10015-72	24546	RN55D 1.96K Ohm 1%
10015-84	24546	RN55D 2.10K Ohm 1%
10015-90	24546	RN55D 24.9K Ohm 1%
10015-102	24546	RN55D 249K Ohm 1%
10015-114	24546	RN55D 75K Ohm 1%
10015-133	24546	RN55D 49.9K Ohm 1%
10015-176	24546	RN55D 3.48K Ohm 1%
10015-188	24546	RN55D 33.2K Ohm 1%
10015-191	24546	RN55D 66.5K Ohm 1%
10015-205	24546	RN55D 768 Ohm 1%
10015-206	24546	RN55D 7.50K Ohm 1%
10015-207	24546	RN55D 20.0K Ohm 1%
10015-210	24546	RN55D 150K Ohm 1%
10015-211	24546	RN55D 2.74K Ohm 1%
10015-219	24546	RN55D 261K Ohm 1%
10015-256		
10015-260	24546	RN55D 221K Ohm 1%
10015-262	24546	RN55D 232K Ohm 1%

PART NO. CROSS REFERENCE		
PM PART NO.	MFGR. CODE	MFGR. PART NO.
10017	07263	2N3569
10018	07263	2N3646
10023	07263	2N3644
10043	01002	IN4148
10044-1	28821	IN4383
10044-2	28821	IN4385
10045	12954	IN823
10046-1	71450	X20IR501B
10046-3	71450	X20IR503B
10046-8	71450	X20IR103B
10046-9	71450	X20IR101B
10046-10	71450	X20IR104B
10046-12	71450	X20IR504B
10046-14	71450	X20IR205B
10064-13	75915	312010
10140-1	74970	105-0852-001
10140-4	74970	105-0860-001
10206	07263	2N3053
10238-3	14655	FAH-42500-15-B2
10238-4	14655	FAH-752-25-A3
10241-5	01121	RC20GF1R0J
10241-9	80031	2 Ohm 5%

PART NO. CROSS REFERENCE		
PM PART NO.	MFGR. CODE	MFGR. PART NO.
10398	07263	PN4917
10462	28821	ME2H (C2A)
10581-1	72982	538-006,A,2-8pF
10585-1	56289	CO28B102E221J
10585-4	56289	CO28B102F681J
10631-7	99800	1025-64
10633-1	81483	BW-20 1 Ohm 5%
10633-3	81483	BW-20 .36 Ohm 5%
10634-3	91637	MMF ½T-1 1.0M Ohm 1%
10665-3	75042	RCR 32G
10665-7	75042	RCR 32G 10M Ohm 1%
10665-8	01121	RC 32F 104J
10787-2	56289	196D126X9020 JA1
10787-3	56289	196D276X9025 LA3
10787-4	56289	196D686X0025 MA3
10787-5	56289	196D105X0035 HA1
10885	01295	IN957B
10909-2	84171	CM 06FD471F03
10909-3	84171	CM 06FD391F03
10927	02735	2N4314

PART NO. CROSS REFERENCE		
PM PART NO.	MFGR. CODE	MFGR. PART NO.
11119	07263	2N4250
11501-2	72982	8131-050-651-104M
11507	01295	TIS 97
11711-1	73138	66WR 500 Ohm
11845-4	24546	FP-2 15 Ohm 1% 2W
11845-5	24546	FP-2 36K Ohm 1% 2W
11868	04713	IN5229B
12389	76541	MV5025
12409	83701	PE10
12440-1	02660	225-21821-110
12440-4	75042	50-30EE-140
12440-5	75042	50-44S-30-1
12449-15	14298	EE 1/8 C2 75.0K Ohm 0.1%
12449-16	14298	EE 1/8 C2 150.0K Ohm 0.1%
12449-18	14298	EE 1/8 C2 7.50K Ohm 0.1%
12449-19	14298	EE 1/8 C2 1.00K Ohm 0.1%
12449-21	14298	EE 1/8 C2 10.00K Ohm 0.1%
12449-22	14298	EE 1/8 C2 2.50K Ohm 0.1%
12449-28	14298	EE 1/8 C2 12.5K Ohm 0.1%
12449-30	14298	EE 1/8 C2 30.0K Ohm 0.1%
12449-31	14298	EE 1/8 C2 1.111K Ohm 0.1%
12449-33	14298	EE 1/8 C2 100K Ohm 0.1%

PART NO. CROSS REFERENCE		
PM PART NO.	MFGR. CODE	MFGR. PART NO.
12449-37	14298	EE 1/8 C2 20K Ohm 0.1%
12449-45	14298	EE 1/8 C2 250K Ohm 0.1%
12449-51	91637	MFF 1/8 T-2 2.000K Ohm ±0.1%
12449-54	91637	MMF 1/8 T-2 1.333K Ohm ±0.1%
12449-55	91637	MMF 1/8 T-2 4.000K Ohm ±0.1%
12449-65	14298	EE 1/8 C2 2.20K 0.1%
12449-66	14298	EE 1/8 C2 31.50K 0.1%
12449-73	14298	EE 1/8 C2 10.20K Ohm 0.1%
12449-74	91637	MMF 1/8 T-2 1.182K Ohm ±0.1%
12449-75	91637	MMF 1/8 T-2 1.745K Ohm ±0.1%
12449-76	14298	EE 1/8 C2 9.20K Ohm 0.1%
12591	17856	E112
13300-4	01121	D2C104
13300-5	01121	D2C503
13300-6	71450	375T101B
13470-1	01295	SN74LS00N
13470-2	01295	SN74LS01N
13470-4	01295	SN74LS04N
13470-5	01295	SN74LS08N
13470-7	01295	SN74LS14N
13470-13	01295	SN74LS74N
13470-14	01295	SN74LS75N
13470-24	01295	SN74LS132N
13470-39	01295	SN74LS11N
13470-40	01295	SN74LS125N
13470-41	01295	SN74LS163N
13470-42	01295	SN74LS365N
13470-43	01295	SN74LS374N
13470-44	01295	SN74LS138N
13470-45	01295	SN74LS240N
13470-46	01295	SN74LS161N
13470-47	01295	SN74LS32N
13471	27014	LM324N

PART NO. CROSS REFERENCE		
PM PART NO.	MFGR. CODE	MFGR. PART NO.
13638	07263	SE7056
13859	28821	13859
13979-1	80031	C281CH/AIM
14116-3	71590	DD30-502
14142	28821	AM2503DC
14226	01295	TL074CN
14320-2	28821	14320
14514-1	00779	87022-1 Reeled
14525	28821	14525
14621	27014	LM358N
14622	02735	2N6486
14623	02735	2N6489
14624	01295	TL072CP
14626	02114	1F 31-3C8
14627	02114	41 'U' Bolt
14629	27014	LF13331N
14630	27014	MM74C00N
14631	27014	MM7402N
14632	27014	MM74C04N
14633	27014	MM74C76N
14634	27014	LM311N
14635	27014	LM3146N
14637	02735	CD4002AE
14639	34649	P2102A
14640	34649	P2114
14641	34649	8255A
14644	28821	DAC08CQ
14645	28821	AD56AJD
14647	02735	2N6487
14648	14099	FM50
14649	04713	MDA104A

PART NO. CROSS REFERENCE		
PM PART NO.	MFGR. CODE	MFGR. PART NO.
14654	28821	#1287
14655	00779	#552742-1
14656	28821	14656
14661-1	28821	#LLL-7
14661-2	28821	#LLL-17
14661-3	28821	#LLL-27
14662-1	03888	#PVC70-25M
14663	81073	76B02
14664	00779	552791-2
14667	32293	IH5014CPD
14668	27014	LM319N
14669	27014	LF356N
14670	27014	DM2504CN
14671	28821	AD565JN
14673	04713	MC3448L
14675	28821	Z80 CPU
14677	81073	#76SB05
14687	04435	9684-1
14877-1	24546	FP3 22K Ohm 10% 3W
14881-1	01121	108B221
14881-2	01121	108B102
14882-1	01121	110A103
14891	81073	76SB08
14920	28821	2MHZ Crystal HC6
14935-1	91637	CW-5-2 0.1 Ohm 4W
14977-1	50088	MK2716N
15036	34649	8291
15039	04713	K1148A

The following five-digit code numbers are listed in numerical sequence along with the manufacturer's name and address to which the code has been assigned.

The Federal Supply Code has been taken from Cataloging Handbook H 4-2, Code to Name.

00303 Shelly Associates Inc.
El Segundo, California

00656 Aerovox Corp.
New Bedford, Massachusetts

00779 Amp Inc.
Harrisburg, Pennsylvania

01002 General Electric Co.
Capacitor Dept.
Hudson Falls, New York

01121 Allen-Bradley Co.
Milwaukee, Wisconsin

01295 Texas Instruments, Inc.
Semiconductor Components Div.
Dallas, Texas

01961 Pulse Engineering Inc.
Santa Clara, California

02114 Ferroxcube Corp. of America
Saugerties, New York

02660 Amphenol-Borg Elect. Corp.
Broadview, Illinois

02735 Radio Corp. of America
Semiconductor and Materials Div.
Somerville, New Jersey

03888 Pyrofilm Resistor Co. Inc.
Whippany, New Jersey

04062 Elmenco Products Co.
New York, New York

04435 Jettron Products Inc.
Hanover, New Jersey

04713 Motorola, Inc.
Semicondcutor Products Div.
Phoenix, Arizona

05035 Ayer Manufacturing Co.
Chicago Heights, Illinois

05245 Corcom Inc.
Chicago, Illinois

07126 Digitran Co.
Pasadena, California

07263 Fairchild Camera and Inst. Corp.
Semiconductor Div.
Mountain View, California

07910 Continental Device Corp.
Hawthorne, California

09214 General Electric Co.
Semiconductor Products Dept.
Auburn, New York

09353 C and K Components Inc.
Newton, Massachusetts

11323 General Microwave Corp.
Farmingdale, New York

11711 General Instruments Inc.
Semiconductor Div.
Newark, New Jersey

12674 Syncro Corp.
Hicksville, Ohio

12954 Dickson Electronics Corp.
Scottsdale, Arizona

14099 Semtech Corp.
Newbury Part, California

14298 American Comp
Conshohocken, Pennsylvania

14655 Cornell Dubilier Corp.
New York, New York

16733 Cablewave Systems
North Haven, Connecticut

17540 Alpha Industries
Woburn, Massachusetts

17856 Siliconix Inc.
Santa Clara, California

18235 KRL Electronics, Inc.
Manchester, New Hampshire

18324 Signetics Corp.
Sunnyvale, California

19447 Electro-Technique Inc.
Oceanside, California

21847 Aertech Industries
Sunnyvale, California

22045 Jordan Electric Co.
Van Nuys, California

22526 Berg Electronics Corp.
York Expressway
New Cumberland, Pennsylvania

24546 Corning Glass Works Electronic Components Div.
Raleigh, North Carolina

24931 Speciality Connector Co. Inc.
Indianapolis, Indiana

25088 Siemens America Corp.
Iselin, New Jersey

27014 National Semiconductor Corp.
Santa Clara, California

27556 IMB Electronic Products
Santa Fe Springs, California

28480 Hewlett-Packard Co.
Palo Alto, California

28821 Pacific Measurements Inc.
Sunnyvale, California

31918 International Electro Exchange
Eden Prairie, Minnesota

32284 Rotron Manufacturing Co. Inc.
Woodstock, New York

32293 Intersil Inc.
Cupertino, California

33025 Omni Spectra
Tempe, Arizona

34078 Midwest Microwave Inc.
Ann Arbor, Michigan

34649 Intel Corp.
Santa Clara, California

44655 Ohmite Mfg. Co.
Skokie, Illinois

50088 Mostek Corp.
Carrollton, Texas

50625 Revere Corp. of America
Wallingford, Connecticut

56289 Sprague Electric Co.
North Adams, Massachusetts

70903 Belden Mfg. Co.
Chicago, Illinois

71034 Bliley Electric Co.
Erie, Pennsylvania

71400 Bussman Mfg.
Div. of McGraw-Edison Co.
St. Louis, Missouri

71450 CTS Corp.
Elkhart, Indiana

71590 Centralab Electronics
Milwaukee, Wisconsin

72982 Erie Tech. Products Inc.
Erie, Pennsylvania

73138 Beckman Instruments Inc.
Helipot Division
Fullerton, California

73445 Amperex Electronic Corp.
Hicksville, New York

74970 E.F. Johnson Co.
Waseca, Minnesota

75042 TRW Electronic Components IRC.
Philadelphia, Pennsylvania

75915 Littlefuse Inc.
Des Plaines, Illinois

76493 J.W. Miller Co.
Compton, California

76541 Monsanto commerical Products Co.
Cupertino, California

76854 Oak Mfg. Co.
Crystal Lake, Illinois

79727 Continental-Wirt Electronics Corp.
Philadelphia, Pennsylvania

80031 Mepco/Electra Inc.
A North American Phillips Co.
Morristown, New Jersey

80294 Bours Inc.
Trimpot Div.
Riverside, California

81073 Grayhill Inc.
La Grange, Illinois

81095 Traid Transformer Corp.
Venice, California

81483 International Rectifier Corp.
El Segundo, California

82389 Switchcraft Inc.
Chicago, Illinois

83330 H.H. Smith Inc.
Brooklyn, New York

83594 Burroughs Corp.
Electronic Components Div.
Plainfield, New Jersey

83701 Electronic Devices Inc.
Yonkers, New York

84171 Arco Electronics Inc.
Great Neck, New York

90303 Mallory Battery Co.
Tarrytown, New York

90634 Saft America Inc.
Metuchen, New Jersey

91418 Radio Materials Co.
Chicago, Illinois

91637 Dale Electronics Inc.
Columbus, Nebraska

91929 Honeywell Inc.
Microswitch Div.
Freeport, Illinois

94144 Raytheon Co.
Components Div.
Quincy, Massachusetts

94222 Southco Inc.
Lester, Pennsylvania

95146 Alco Electronics
Lawrence, Massachusetts

99392 STM Corp.
Oakland, California

99800 Delavan Electronics Corp.
East Aurora, New York

SECTION 10

MANUAL CORRECTIONS

This section lists the corrections that must be incorporated in this manual to make it correspond to a particular instrument. The serial number of each instrument is prefixed by a code number. This code number is used to identify the applicable manual corrections for a particular instrument. When correcting this manual start with the corrections corresponding to the Code No. on the instrument. If a particular component has been changed more than one time, make only the first change encountered.

CODE NO.	CORRECTIONS	PM PART NO.	SECTION OF MANUAL AFFECTED
ALL	TYPOGRAPHICAL ERRORS:		
	The description of A10 #14180 should be read:		9
	FROM: "IEEE Interface Bus PC Board Assembly (Option #04)"		
	TO: "IEEE Indicator Bus PC Board Assembly (Option #04)"		
	Change Circuit Reference on Mainframe/Display Chassis Assembly -14974:		9
	FROM: A9 TO: A8 FROM: A8 TO: A9		
	Change Circuit Reference on IEEE Indicator PC Board Assembly -14584:		9
	FROM: A9CR1 TO: A8CR1 FROM: A9CR2 TO: A8CR2 FROM: A9CR3 TO: A8CR3		
	Change Circuit Reference on IEEE Interconnect PC Board Assembly -14493:		9
	FROM: A8J1 TO: A9J1 FROM: A8J2 TO: A9J2		
	Circuitry at A10R17 (Schematic IEEE Interface Bus 14181 Sheet 1 of 2) "5V COM" should be read "15V COM'		8
	Change A10U25 from 14977-1 to	14977-4	9-10
	Change A10U26 from 14977-1 to	14977-5	9-10

SECTION 10

MANUAL CORRECTIONS

This section lists the corrections that must be incorporated in this manual to make it correspond to a particular instrument. The serial number of each instrument is prefixed by a code number. This code number is used to identify the applicable manual corrections for a particular instrument. When correcting this manual start with the corrections corresponding to the Code No. on the instrument. If a particular component has been changed more than one time, make only the first change encountered.

CODE NO.	CORRECTIONS	PM PART NO.	SECTION OF MANUAL AFFECTED
ALL	In paragraph 4.2 on page 4-1 IS: "The kit consists of a shorting board, Assembly No. 12719," - - - - - - S/B: "The kit consists of a shorting board, Assembly No. 15291," - - - - - - In paragraph 4.3 Step 2 on page 4-1 IS: "SHORTING BOARD A CHANNEL ON" S/B: "SHORTING BOARD S1 to HORIZ S2 to channel being calibrated" In paragraph 4.4 Step 3 on page 4-1 IS: "Change the selector switch on the extender from VERT to HORIZ. Turn POWER switch ON" S/B: Immediately after "VERT to HORIZ" and before "Turn POWER" add the following: "Set S1 on the shorting board to A-CHAN"		4

SECTION 10

MANUAL CORRECTIONS

This section lists the corrections that must be incorporated in this manual to make it correspond to a particular instrument. The serial number of each instrument is prefixed by a code number. This code number is used to identify the applicable manual corrections for a particular instrument. When correcting this manual start with the corrections corresponding to the Code No. on the instrument. If a particular component has been changed more than one time, make only the first change encountered.

CODE NO.	CORRECTIONS	PM PART NO.	SECTION OF MANUAL AFFECTED
ALL	In paragraph 6.2.3.b on page 6-1 IS: Install the shorting board, assembly number 12719 (part of kit 12715) in the horizontal or lefthand plug-in slot. Install the extender from the kit (assembly number 12716) in the A channel or middle plug-in slot. S/B: Install the shorting board, assembly number 15291 (part of kit 12715) in the horizontal or lefthand plug-in slot. Install the extender from the kit (assembly number 12716) in the A channel or middle plug-in slot. In paragraph 6.2.3.c on page 6-1 IS: Select the following switch positions: Shorting Board: A channel ON S/B: Select the following switch positions: Shorting Board: S1 switch to "Horiz" S2 switch to channel being calibrated In paragraph 6.2.4.g on page 6-2 IS: Select the following switch positions: Shorting Board: A channel ON S/B: Select the following switch positions: Shorting Board: Set S1 switch to "A-chan" In paragraph 6.3.2 Step 2 on page 6-3 IS: Select the following switch positions: Shorting Board: A channel ON S/B: Select the following switch positions: Shorting Board: S1 switch to "Horiz" S2 switch to channel being calibrated		6

SECTION 10

MANUAL CORRECTIONS

This section lists the corrections that must be incorporated in this manual to make it correspond to a particular instrument. The serial number of each instrument is prefixed by a code number. This code number is used to identify the applicable manual corrections for a particular instrument. When correcting this manual start with the corrections corresponding to the Code No. on the instrument. If a particular component has been changed more than one time, make only the first change encountered.

CODE NO.	CORRECTIONS	PM PART NO.	SECTION OF MANUAL AFFECTED
06	Incorrect Reference Designation called-out to the Deflection Circuit Schematic Diagram 14088:	- - -	8-11
	a) Change A4C34 to A4C35 b) Change A4C35 to A4C34		
	Change A4R71, A4R74, A4R127 and A4R131 from 47Ω (10013-9) to 220Ω	10013-17	8-11 9-4,-5
07	Change A4C8 from 3.3pF (10001-12) to 4.7pF	10001-2	8-11,9-3
	Change part description for A6U10 & A6U11 from 2114 to 2114AL-4 (PM # 14640 remains to same)	- - - - -	8-15,9-8
	Change description of A10U18, A10U19, A10U20 and A10U21 from 2114 to 2114AL-4 (PM # 14640 remains the same).		
08	Delete A4R72, A4R73, A4R129 & A4R130, Metal Glaze 36K Ohm; ±10%, 2W.	11845-5	8-11,8-12, 9-4,9-5.
	Delete A4R118, Metal Glaze 22K Ohm, ±10%, 3W.	14877-1	8-11,8-12, 9-5.
	1) Add to Mainframe-Display Chassis Assembly 14974:		
	R5 Metal Glaze 36K Ohm ±10%, 2W	11845-5	9-2
	R6 " " " " " "	11845-5	9-2
	R7 " " " " " "	11845-5	9-2
	R8 " " " " " "	11845-5	9-2
	R9 " " 22K Ohm ±10%, 3W	14877-1	9-2
	Remove A4J20 Test Jack	14320-2	8-11,8-12, 9-4.
	Add A4C36 Capacitor, Cer. 82pF, ±5%, 1000V across A4C16.	10001-17	8-11,8-12, 9-3.

SECTION 10

MANUAL CORRECTIONS

This section lists the corrections that must be incorporated in this manual to make it correspond to a particular instrument. The serial number of each instrument is prefixed by a code number. This code number is used to identify the applicable manual corrections for a particular instrument. When correcting this manual start with the corrections corresponding to the Code No. on the instrument. If a particular component has been changed more than one time, make only the first change encountered.

CODE NO.	CORRECTIONS	PM PART NO.	SECTION OF MANUAL AFFECTED
08	con't		
	Add to 1038-D14 Display Schematic Diagram (D) 14619:	- - - -	8-3

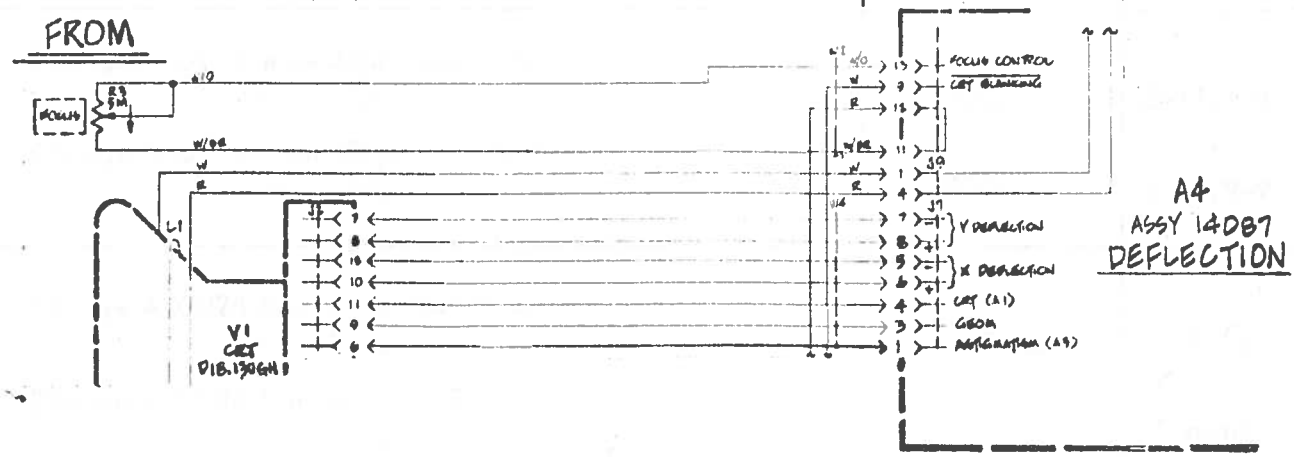

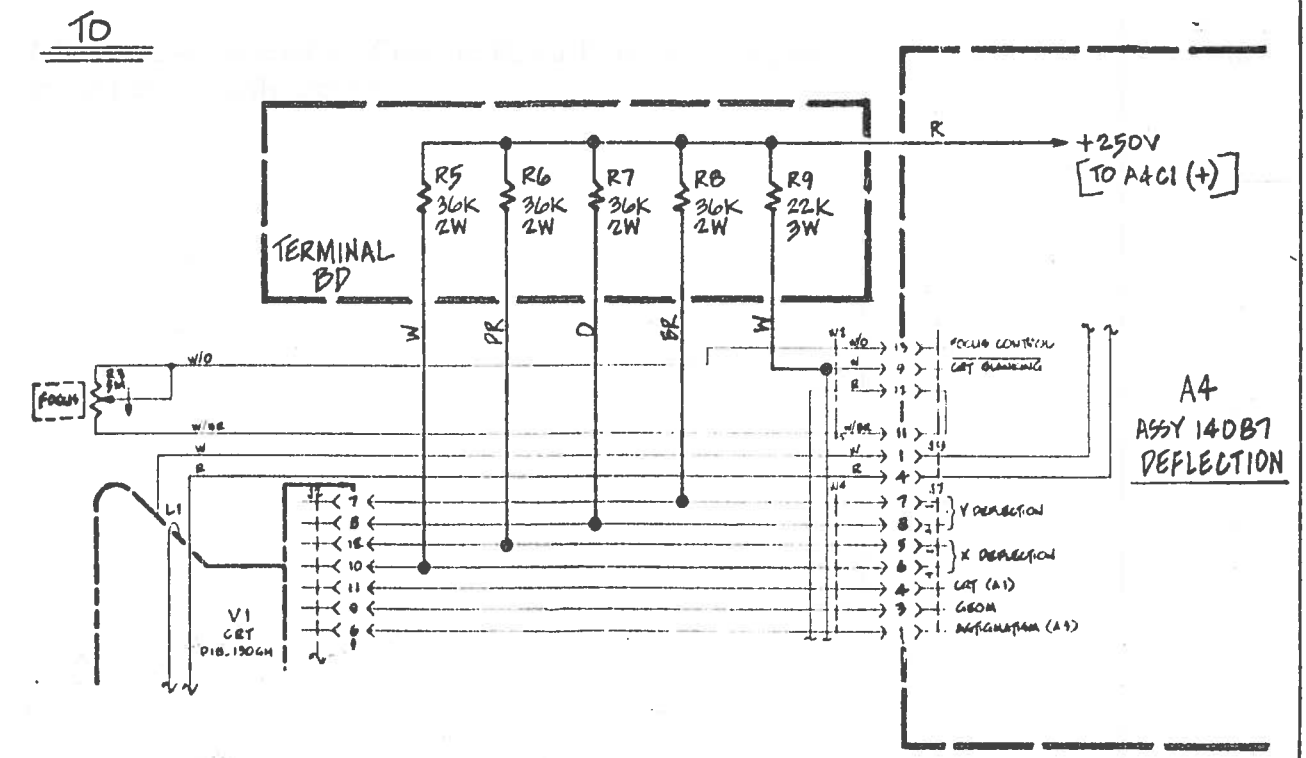

SECTION 10

MANUAL CORRECTIONS

This section lists the corrections that must be incorporated in this manual to make it correspond to a particular instrument. The serial number of each instrument is prefixed by a code number. This code number is used to identify the applicable manual corrections for a particular instrument. When correcting this manual start with the corrections corresponding to the Code No. on the instrument. If a particular component has been changed more than one time, make only the first change encountered.

CODE NO.	CORRECTIONS	PM PART NO.	SECTION OF MANUAL AFFECTED
09	Change A4C27 from 2.2pF (10001-1) to 4.7pF	10001-2	8-11,9-3
10	Change A10C11 from 33pF (10001-5) to 15pF	10001-8	8-17,9-8
	Change A10C48 from 100pF (10000-1) to 68pF	10001-4	8-17,9-9
11	Change A10U25 from 2716 (14977-4) to 2716	14977-6	9-10
	Change A10U26 from 2716 (14977-5) to 2716	14977-7	9-10
12	Add A10C42 Capacitor, Ceramic 0.1 μ F between signal ground and chassis ground.	11501-2	9-10

SECTION 10

MANUAL CORRECTIONS

This section lists the corrections that must be incorporated in this manual to make it correspond to a particular instrument. The serial number of each instrument is prefixed by a code number. This code number is used to identify the applicable manual corrections for a particular instrument. When correcting this manual start with the corrections corresponding to the Code No. on the instrument. If a particular component has been changed more than one time, make only the first change encountered.

CODE NO.	CORRECTIONS	PM PART NO.	SECTION OF MANUAL AFFECTED
12	con't On page 8-13, Schematic 14215, Sheet 1 change circuitry **From:** 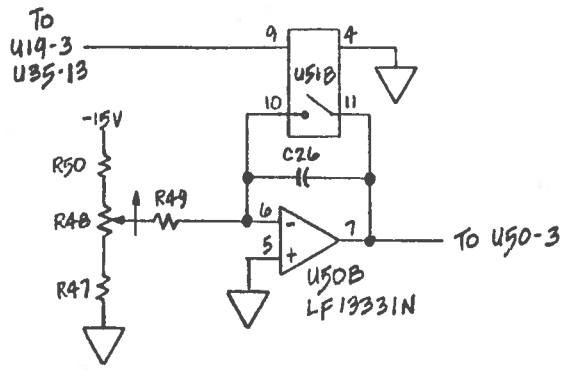 **To:** 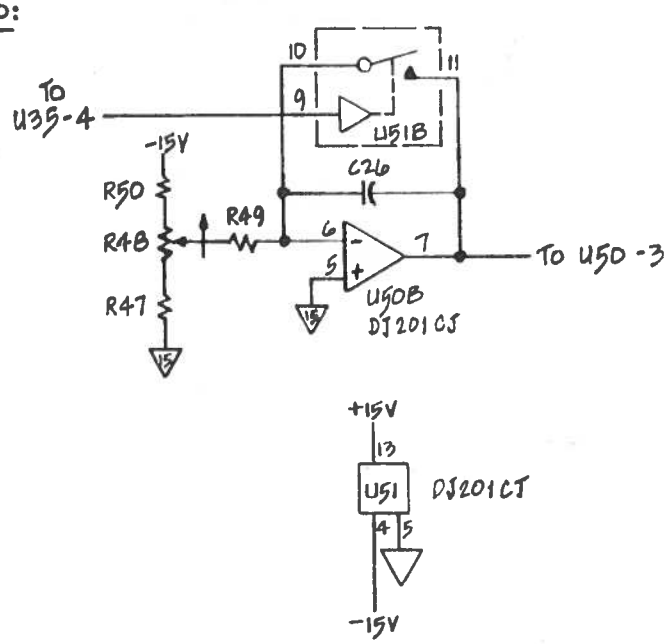 		

SECTION 10

MANUAL CORRECTIONS

This section lists the corrections that must be incorporated in this manual to make it correspond to a particular instrument. The serial number of each instrument is prefixed by a code number. This code number is used to identify the applicable manual corrections for a particular instrument. When correcting this manual start with the corrections corresponding to the Code No. on the instrument. If a particular component has been changed more than one time, make only the first change encountered.

CODE NO.	CORRECTIONS	PM PART NO.	SECTION OF MANUAL AFFECTED
12	con't From: 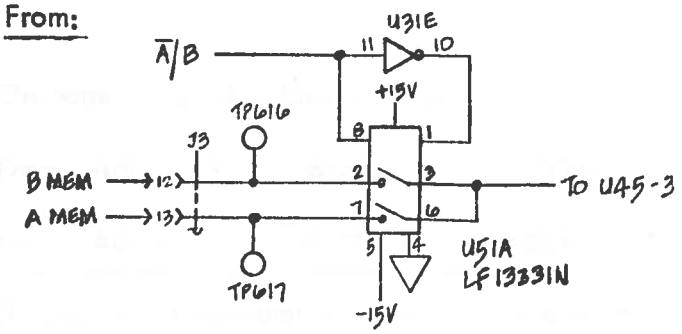 To: 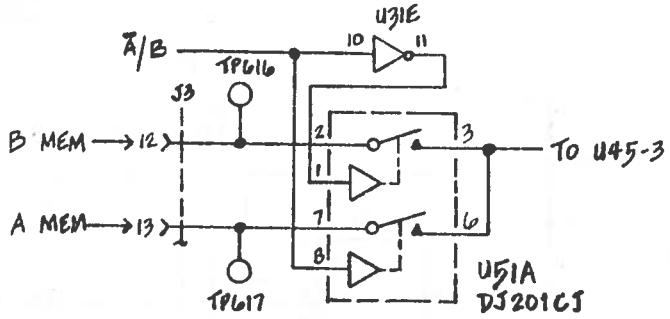 		

SECTION 10

MANUAL CORRECTIONS

This section lists the corrections that must be incorporated in this manual to make it correspond to a particular instrument. The serial number of each instrument is prefixed by a code number. This code number is used to identify the applicable manual corrections for a particular instrument. When correcting this manual start with the corrections corresponding to the Code No. on the instrument. If a particular component has been changed more than one time, make only the first change encountered.

CODE NO.	CORRECTIONS	PM PART NO.	SECTION OF MANUAL AFFECTED
12	con't On page 9-8, 1st column change From: A6U51 14629 LF13331N To: A6U51 15119 DG201CJ		
13	On page 8-11 Schematic 14088 change circuit: From: 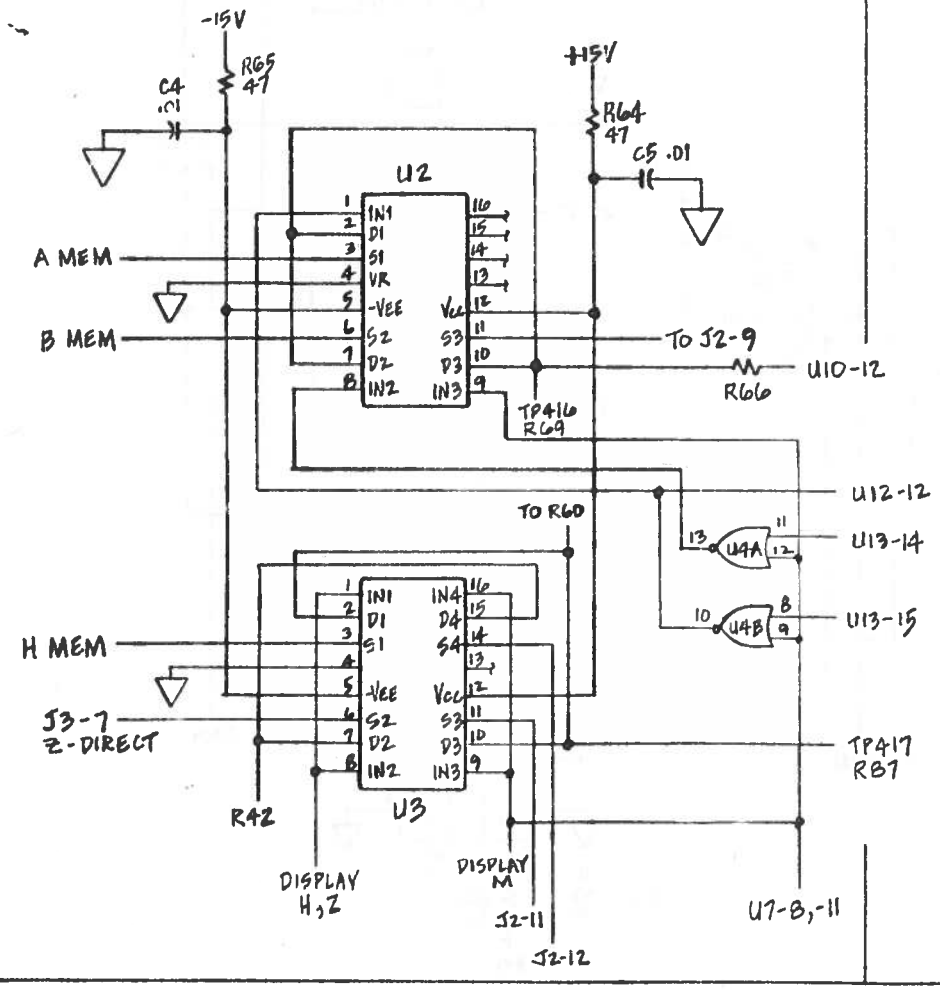		

SECTION 10

MANUAL CORRECTIONS

This section lists the corrections that must be incorporated in this manual to make it correspond to a particular instrument. The serial number of each instrument is prefixed by a code number. This code number is used to identify the applicable manual corrections for a particular instrument. When correcting this manual start with the corrections corresponding to the Code No. on the instrument. If a particular component has been changed more than one time, make only the first change encountered.

CODE NO.	CORRECTIONS	PM PART NO.	SECTION OF MANUAL AFFECTED
13	con't **To:**		

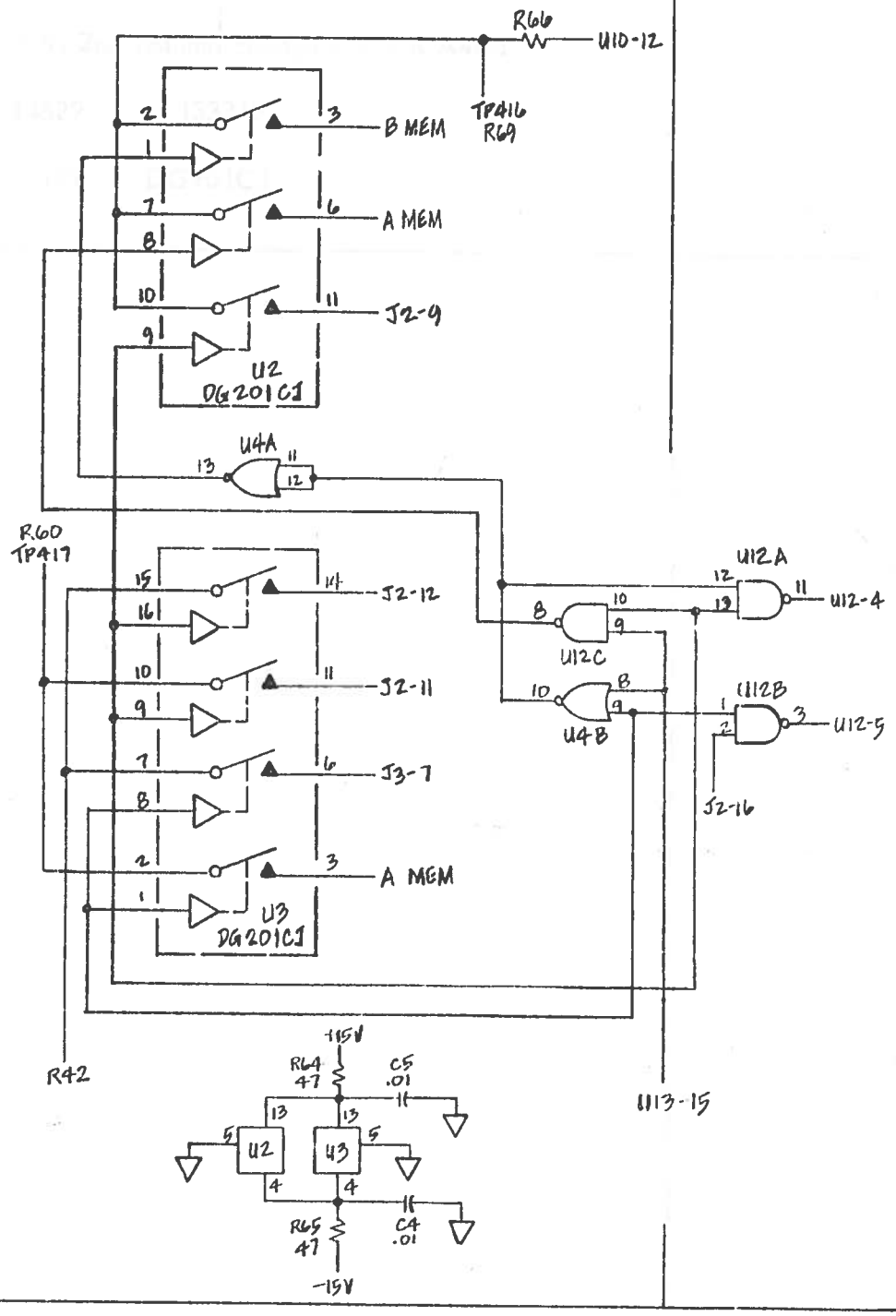

SECTION 10

MANUAL CORRECTIONS

This section lists the corrections that must be incorporated in this manual to make it correspond to a particular instrument. The serial number of each instrument is prefixed by a code number. This code number is used to identify the applicable manual corrections for a particular instrument. When correcting this manual start with the corrections corresponding to the Code No. on the instrument. If a particular component has been changed more than one time, make only the first change encountered.

CODE NO.	CORRECTIONS	PM PART NO.	SECTION OF MANUAL AFFECTED
13	con't On page 9-5, 2nd column change A4U2 & A4U3 From: 14629 LF13331N To: 15119 DG201CJ		