Tektronix®
COMMITTED TO EXCELLENCE

INTER-OFFICE COMMUNICATION

TO: Catalog Holders

DATE: September, 1980

FROM: Shirley Spence x5002 50-424

SUBJECT: Catalog Updating/Indexes

The Monolithic Circuit/Hybrid Circuit Catalog is set-up to give the user all of the basic information needed for a given circuit that has "Turned Regular" and is in production.

The catalog will be updated at the end of each quarter. The pages with the new circuit information will be distributed to each catalog holder at that time.

The catalog is set up in circuit numerical order.

The indexes for each section are set up as follows:

Blue Pages - By Circuit Number
(e.g., M018, M019, etc.)

Yellow Pages - By Part Number
(e.g., 155-0004-00, 155-0005-00, etc.)

Green Pages - By Circuit Type
(e.g., General Circuits, A/D and D/A Circuits, etc.)

Tan Pages - Engineering/Production Contacts
(e.g., Krishna Verma/Steve Fierro, etc.)

MONOLITHIC CIRCUITS

BY CIRCUIT NUMBER

TITLE	PART NUMBER	CIRCUIT
Horizontal Lockout Logic	155-0009-00	M001
Chop Divider/Blanking, Type 3	155-0010-00	M004
Chop and Clock Blanking	155-0011-00	M012
"Z" Axis Logic	155-0012-00	M015
Miller Integrator and Delay Pick-Off	155-0028-XX 155-0042-XX	M018
Analog to Decimal Converter	155-0014-01	M019
Data Switch	155-0015-01	M020
Horizontal Chop and Alternate Binary	155-0013-00	M022
Decade Counter	155-0017-00	M025
Zero Logic	155-0018-00	M026
Decimal Point and Spacing	155-0019-00	M027
Output Assembler	155-0020-00	M028
Timing Generator	155-0021-00	M029
Readout System 576	155-0004-01	M033
Readout System 576	155-0005-00	M034
Readout System 576	155-0006-01	M035
Channel Switch	155-0022-XX	M036
Channel Switch	155-0022-00	M036
Readout System 576	155-0007-01	M038
Readout System 576	155-0008-01	M039
Sweep Control	155-0056-00	M042
D/A Converter	155-0038-XX	M045
Quad Timing Unit	155-0031-01	M047

TITLE	PART NUMBER	CIRCUIT
Probe Power Supply	155-0033-00	M048
Dual Output Amplifier	155-0047-00	M050
Trigger and Sweep	155-0048-XX 155-0055-00	M052
Quad Operational Amplifier	155-0035-00 155-0116-00	M053
2 Op Amps/2 Current Sources	155-0057-00	M053
Input Amplifier	155-0032-XX	M055
Dual Probe	155-0034-00	M061
423 Vertical Amplifier	155-0050-01	M065
423 "Z" Axis/HV Regulator	155-0051-00	M068
Gain Trim Amplifier	155-0059-00	M077
Sweep Control	155-0049-01	M079
HF Output Amplifier	203-0080-90	M080
FT Doubler Amplifier	155-0061-00	M083
485 Vertical Amplifier	155-0078-10	M084
Vertical Output Amplifier	203-0088-90	M089
Vertical Output Amplifier	203-0089-90	M089
Power Supply Regulator	155-0067-02	M091
Input Protection and Probe Logic	155-0076-00	M094
Channel Switch	155-0091-00	M095
Logic Probe Logic	203-0096-90	M096
Normalizing Circuit	155-0106-00	M101
Vertical Output Amplifier	203-0102-90	M102
Dual Op Amps and Channel Switch	155-0083-00	M105
Legend Generator	155-0110-00	M119

TITLE	PART NUMBER	CIRCUIT
Trigger circuit	155-0109-01	M120
Trigger Amp; Source Select & Peak-to-Peak	155-0126-00	M121
Fast Trigger Circuit	155-0150-00	M122
5-Digit BCD Counter	155-0119-00	M123
Sync Counter	155-0144-00	M124
FT Doubler	203-0126-90	M126
7-Segment Character Generator	155-0114-00	M127
Vertical Amplifier	203-0130-90	M130
Trigger Sub-System	155-0121-00	M131
Sweep Control	155-0122-00	M132
Sweep and Pick-Off	155-0123-00	M133
Trigger Source Selector and Amplifier	155-0160-00	M136
Horizontal Preamplifier	155-0124-00	M138
4-Decade Counter and Memory	155-0171-00	M150
Pulse Output Amplifier	155-0145-00	M151
CRT Geometry Correction	155-0152-00	M152
Display Multiplexer	155-0154-00	M154
4-Bit Parallel ADC	203-0155-90	M155
Trigger Generator	155-0151-00	M159
Character Generator M24-N	155-0023-00	M160
Character Generator M24-S	155-0024-00	M161
Character Generator M24-P	155-0025-00	M162
Character Generator M24-L1	155-0026-00	M163
Character Generator M24-L2	155-0027-00	M164
Lengend Generator M92-R	155-0086-00	M165

TITLE		PART NUMBER	CIRCUIT
Legend Generator	M92-C1	155-0087-00	M166
	M92-C2	155-0088-00	M167
Legend Generator	M92-C3	155-0104-00	M169
Legend Generator	M92-C3	155-0105-00	M170
Legend Generator	M92-A	155-0135-00	M171
Dual Strobe Generator		155-0170-00	M175
5-Bit ECL D/A Converter		203-0177-90	M177
Channel Switch and FT Doubler		203-0178-90	M178
Digital Storage Vertical Control		155-0157-00	M180
Digital Storage Horizontal Control		155-0158-00	M181
7000 Series DVM		155-0185-00	M187
Trigger Circuit		155-0195-00	M188
Sync Generator		155-0188-00	M192
Horizontal Output Amplifier		203-0196-90	M196
Horizontal Output Amplifier		203-0197-90	M197
Clamp and Sensor		203-0198-90	M198
Input Amplifier		203-0199-90	M199
FT Doubler		155-0187-00	M207

MONOLITHIC CIRCUITS

BY PART NUMBER

TITLE	CIRCUIT	PART NUMBER
576 Readout System	M033	155-0004-00
576 Readout System	M034	155-0005-00
576 Readout System	M035	155-0006-01
576 Readout System	M038	155-0007-00
576 Readout System	M039	155-0008-00
Horizontal Lockout Logic	M001	155-0009-00
Chop Divider and Blanking (Type 3)	M004	155-0010-00
Clock and Chop Blanking	M012	155-0011-00
Z-Axis Logic	M015	155-0012-00
DC Binary	M022	155-0013-00
Analog to Decimal Converter	M019	155-0014-01
Data Switch	M020	155-0015-01
Decade Counter	M025	155-0017-00
Zero Logic	M026	155-0018-00
Decimal Point and Spacing	M027	155-0019-00
Output Assembler	M028	155-0020-00
Timing Generator	M029	155-0021-00
Channel Switch	M036	155-0022-00
Character Generator	M160	155-0023-00
Character Generator	M161	155-0024-00
Character Generator	M162	155-0025-00
Character Generator	M163	155-0026-00

TITLE	CIRCUIT	PART NUMBER
Character Generator	M164	155-0027-00
Miller Integrator and Delay Pick-Off	M018	155-0028-00
Quad Timing Unit	M047	155-0031-01
Input Amplifier	M055	155-0032-00
Probe Power Supply	M048	155-0033-00
Dual Diode	M061	155-0034-00
Quad Operational Amplifier	M053	155-0035-00
D/A Converter	M045	155-0038-01 155-0038-02
Dual Output Amplifier	M050	155-0047-00
Trigger and Switch	M052	155-0048-01
Sweep Control	M079	155-0049-01
Vertical Preamplifier	M065	155-0050-01
Z-Axis and HV Regulator	M068	155-0051-00
Trigger and Switch	M052	155-0055-00
Sweep Control	M042	155-0056-00
2 Op Amp/2 Current Source	M053	155-0057-00
Gain Trim Amplifier	M077	155-0059-00
FT Doubler Amplifier	M083	155-0061-00
Power Supply Regulator	M091	155-0067-02
Input Protection and Probe Logic	M094	155-0076-00
485 Vertical Amplifier	M084	155-0078-00
Quad Operational Amplifier	M105	155-0083-00
Legend Generator	M165	155-0086-00
Legend Generator	M166	155-0087-00

TITLE	CIRCUIT	PART NUMBER
Legend Generator	M167	155-0088-00
Channel Switch	M095	155-0091-00
Legend Generator	M169	155-0104-00
Legend Generator	M170	155-0105-00
Trigger Switch	M120	155-0109-01
Legend Generator	M119	155-0110-00
BCD to 7-Segment Decoder	M127	155-0114-00
Quad Operational Amplifier	M053	155-0116-00
5-Digit BCD Counter	M123	155-0119-00
Trigger Sub-System	M131	155-0121-00
Sweep Control	M132	155-0122-00
Sweep and Pickoff	M133	155-0123-00
Horizontal Preamplifier	M138	155-0124-00
Trigger Amplifier	M121	155-0126-00
Legend Generator	M171	155-0135-00
Sync Stripper	M124	155-0144-00
Pulse Cutput Amplifier	M151	155-0145-00
Sweep Trigger	M159	155-0151-00
CRT Geometry Correction	M152	155-0152-00
Display Multiplexer	M154	155-0154-00
Vertical Control	M180	155-0157-00
Horizontal Control	M181	155-0158-00
Trigger Amplifier and Channel Switch	M136	155-0160-00
Dual Strobe Generator	M175	155-0170-00

TITLE	CIRCUIT	PART NUMBER
4-Decade Counter and Memory	M150	155-0171-00
7000 Series DVM	M187	155-0185-00
FT Doubler	M207	155-0187-00
Sync Generator	M192	155-0188-00
Trigger Circuit	M188	155-0195-00
HF Output Amplifier	M080	203-0080-90
Vertical Output Amplifier	M089	203-0089-90
Logic Probe Logic	M096	203-0096-90
Vertical Output Amplifier	M102	203-0102-90
FT Doubler Amplifier	M126	203-0126-90
Vertical Amplifier	M130	203-0130-90
4-Bit Flash A/D Converter	M155	203-0155-90
5-Bit D/A Converter	M177	203-0177-90
Channel Switch and FT Doubler	M178	203-0178-90
Horizontal Output Amplifier	M196	203-0196-90
Horizontal Output Amplifier	M197	203-0197-90
Clamp and Sensor	M198	203-0198-90
Input Amplifier	M199	203-0199-90

INTEGRATED CIRCUITS ENGINEERING/MANUFACTURING CONTACTS

BY CIRCUIT NUMBER

ICE CONTACT	ICM CONTACT	PART NUMBER	CIRCUIT
Mike Metcalf	Kurt Dichmann	155-0009-00	M001
Mike Metcalf	Kurt Dichman	155-0010-00	M004
Mike Metcalf	Steve Stark	155-0011-00	M012
George Wilson	Steve Stark	155-0012-00	M015
Mike Metcalf	Steve Stark	155-0028-00 155-0028-01 155-0042-02 155-0042-03	M018
Mike Metcalf	Dave VanCleve	155-0014-01	M019
Mike Metcalf	Dave VanCleve	155-0015-01	M020
Mike Metcalf	Kurt Dichmann	155-0013-00	M022
Mike Metcalf	Dave VanCleve	155-0017-00	M025
Mike Metcalf	Dave VanCleve	155-0018-00	M026
Mike Metcalf	Dave VanCleve	155-0019-00	M027
Mike Metcalf	Dave VanCleve	155-0004-01	M033
Mike Metcalf	Dave VanCleve	155-0005-00	M034
Mike Metcalf	Dave VanCleve	155-0006-01	M035
Einar Traa	Kurt Dichmann	155-0022-00 155-0022-01	M036
Mike Metcalf	Dave VanCleve	155-0007-01	M038
Mike Metcalf	Dave VanCleve	155-0008-01	M039
Mike Metcalf	Steve Stark	155-0056-00	M042

ICE CONTACT	ICM CONTACT	PART NUMBER	CIRCUIT
Mike Metcalf	Dave VanCleve	155-0031-01	M047
Einar Traa	Steve Stark	155-0033-00	M048
Mike Metcalf	Kurt Dichmann	155-0047-00	P050
Mike Metcalf	Steve Stark	155-0048-00 155-0048-01 155-0055-00	M052
Mike Metcalf	Kurt Dichmann	155-0035-00 155-0057-00 155-0116-00	M053
Einar Traa	Kurt Dichmann	155-0032-00 155-0032-01	M055
Einar Traa	Kurt Dichmann	155-0050-01	M065
Mike Metcalf	Kurt Dichmann	155-0051-00	M068
George Wilson	Kurt Dichmann	155-0059-00	M077
Mike Metcalf	Dave Perkins	155-0049-02	M079
George Wilson	Steve Stark	155-0080-90	M080
George Wilson	Steve Stark	155-0061-00	M083
George Wilson	Steve Stark	155-0078-10	M084
Einar Traa	Dave Perkins	203-0089-90	M089
Mike Metcalf	Dave Perkins	155-0067-02	M091
Mike Metcalf	Dave Perkins	155-0076-00	M094
Einar Traa	Steve Stark	155-0091-00	M095
Mike Metcalf	Kurt Dichmann	203-0096-90	M096
Walt Ainsworth	Kurt Dichmann	155-0106-00	M101
Einar Traa	Dave Perkins	203-0102-90	M102
Mike Metcalf	Kurt Dichmann	155-0083-00	M105
Mike Metcalf	Dave Perkins	155-0110-00	M119

ICE CONTACT	ICM CONTACT	PART NUMBER	CIRCUIT
Walt Ainsworth	Dave Perkins	155-0109-00	M120
Walt Ainsworth	Dave Perkins	155-0126-00	M121
Walt Ainsworth	Dave VanCleve	203-0122-90	M122
Randy Young	Dave DeGrenier	155-0119-00	M123
Ken Schlotzhauer	Steve Stark	155-0144-00	M124
George Wilson	Steve Stark	203-0126-90	M126
Walt Ainsworth	Steve Stark	155-0114-00	M127
Einar Traa	Kurt Dichmann	203-0130-90	M130
Walt Ainsworth	Steve Stark	155-0121-00	M131
Mike Metcalf	Steve Stark	155-0122-00	M132
Mike Metcalf	Steve Stark	155-0123-00	M133
Walt Ainsworth	Kurt Dichmann	155-0160-00	M136
Bob Nordstrom	Steve Stark	155-0124-00	M138
Mike Metcalf	Dave VanCleve	155-0171-00	M150
Ken Schlotzhauer	Steve Stark	155-0145-00	M151
Binoy Rosario	Steve Stark	155-0152-01	M152
Binoy Rosario	Steve Stark	155-0154-00	M154
Bob Nordstrom	Dave VanCleve	203-0155-90	M155
Carl Battjes	Dave Perkins	155-0207-00	M156
Dick Hung	Dave VanCleve	155-0151-00	M159
Mike Metcalf	Dave VanCleve	155-0023-00	M160
Mike Metcalf	Dave VanCleve	155-0024-00	M161
Mike Metcalf	Dave VanCleve	155-0025-00	M162
Mike Metcalf	Dave VanCleve	155-0026-00	M163

ICE CONTACT	ICM CONTACT	PART NUMBER	CIRCUIT
Mike Metcalf	Dave VanCleve	155-0027-00	M164
Mike Metcalf	Dave Perkins	155-0086-00	M165
Mike Metcalf	Dave Perkins	155-0087-00	M166
Mike Metcalf	Dave Perkins	155-0088-00	M167
Mike Metcalf	Dave Perkins	155-0104-00	M169
Mike Metcalf	Dave Perkins	155-0105-00	M170
Mike Metcalf	Dave Perkins	155-0135-00	M171
Bob Nordstrom	Dave VanCleve	203-0175-90	M175
Bob Nordstrom	Kurt Dichmann	203-0177-90	M177
Randy Young	Dave DeGrenier	155-0157-00	M180
Randy Young	Dave DeGrenier	155-0158-00	M181
Don Larson	Dave DeGrenier	155-0185-00	M187
Don Larson	Dave DeGrenier	155-0188-00	M192

GENERAL CIRCUITS

TITLE	PART NUMBER	CIRCUIT
Channel Switch	155-0022-00	M036
Quad Timing Unit	155-0031-01	M047
Dual Output Amplifier	155-0047-00	M050
Dual Diode	155-0034-00	M061
Power Supply Regulator	155-0067-02	M091
Channel Switch	155-0091-00	M095
Normalizing Circuit	155-0106-00	M101
Digital Storage Vertical Control	155-0157-00	M180
Digital Storage Horizontal Control	155-0158-00	M181
TV Sync Generator	155-0188-00	M192

OPERATIONAL AMPLIFIER CIRCUITS

TITLE	PART NUMBER	CIRCUIT
Quad Operational Amplifier	155-0035-00 155-0116-00	M053
2 Op Amps/2 Current Sources	155-0057-00	M053
Dual Op Amps and Channel Switch	155-0083-00	M105

MAINFRAME LOGIC CIRCUITS

TITLE	PART NUMBER	CIRCUIT
Horizontal Lockout Logic	155-0009-00	M001
Chop Divider and Blanking (Type 3)	155-0010-00	M004
Clock and Chop Blanking	155-0011-00	M012
Z-Axis Logic	155-0012-00	M015
Horizontal Chop and Alternate Binary (Type 2)	155-0013-00	M022

KNOB READOUT SYSTEM CIRCUITS

TITLE	PART NUMBER	CIRCUIT
Analog to Decimal Converter	155-0014-01	M019
Data Switch	155-0015-01	M020
Decade Counter	155-0017-00	M025
Zero Logic	155-0018-00	M026
Decimal Point and Spacing	155-0019-00	M027
Output Assembler	155-0020-00	M028
Timing Generator	155-0021-00	M029
Legend Generator	155-0110-00	M119
4-Decade Counter and Memory	155-0171-00	M150
Character Generator	155-0023-00	M160
	155-0024-00	M161
	155-0025-00	M162
	155-0026-00	M163
	155-0027-00	M164
Legend Generator	155-0086-00	M165
	155-0087-00	M166
	155-0088-00	M167
	155-0104-00	M169
	155-0105-00	M170
	155-0135-00	M171

READOUT SYSTEM CIRCUITS

TITLE	PART NUMBER	CIRCUIT
Beta Computer	155-0004-01	M033
Beta Computer	155-0005-00	M034
Beta Computer	155-0006-01	M034
Readout I	155-0007-01	M038
Readout II	155-0008-01	M039
5-Digit BCD Counter	155-0119-00	M123
7-Segment Character Generator	155-0114-00	M127

HORIZONTAL SYSTEM CIRCUITS

TITLE	PART NUMBER	CIRCUIT
Miller Integrator and Delay Pick-off	155-0028-XX 155-0042-XX	M018
Sweep Control	155-0056-00	M042
Trigger and Sweep	155-0048-XX 155-0055-00	M052
Sweep Control	155-0049-01	M079
Trigger	155-0109-01	M120
Trigger Amplifier Source Select and Peak-to-Peak Auto	155-0126-00	M121
Fast Trigger	155-0150-00	M122
Trigger Sub-System	155-0121-00	M131
Sweep Control	155-0122-00	M132
Sweep and Pick-Off	155-0123-00	M133
Trigger Source Selector and Amplifier	155-0160-00	M136
Horizontal Preamplifier	155-0124-00	M138
Trigger Generator	155-0151-00	M159

A/D AND D/A CIRCUITS

TITLE	PART NUMBER	CIRCUIT
D/A Converter	155-0038-XX	M045
Display Multiplexer	203-0155-90	M155
Dual Strobed Comparator	155-0170-00	M175
5-Bit ECL D/A Converter	203-0177-90	M177

VERTICAL AMPLIFIER CIRCUITS

TITLE	PART NUMBER	CIRCUIT
Input Amplifier	155-0032-XX	M055
Vertical Preamplifier	155-0050-01	M065
Gain Trim Amplifier	155-0059-00	M077
HF Output Amplifier	203-0080-90	M080
FT Doubler Amplifier	155-0061-00	M083
485 Vertical Amplifier	155-0078-10	M084
Vertical Output Amplifier	203-0089-90	M089
Vertical Output Amplifier	203-0102-90	M102
FT Doubler Amplifier	203-0126-90	M126
Vertical Amplifier	203-0130-90	M130

TV AND CRT CONTROL CIRCUITS

TITLE	PART NUMBER	CIRCUIT
Z-Axis and HV Regulator	155-0051-00	M068
Sync Stripper	155-0144-00	M124
Pulse Output Amplifier	155-0145-00	M151
CRT Geometry Correction	155-0152-00	M152
Display Multiplexer	155-0154-00	M154

PROBE CONTROL CIRCUIT

TITLE	PART NUMBER	CIRCUIT
PRobe Power Supply	155-0033-00	M048
Input Protection and Probe Logic	155-0076-00	M094
Logic Probe Logic	203-0096-90	M096

HORIZONTAL LOCKOUT LOGIC 155-0009-00 M001

DESCRIPTION

The horizontal lockout logic receives inputs from the horizontal chop and alt. binary, "A" sweep delay control, "A" sweep gate, "B" sweep holdoff and "B" sweep gate. Logic is performed on these signals to provide lockout for "A" sweep or "B" sweep and alternating signals for the horizontal chop and alt. binary.

PROCESS	200 Ω/Sq
POWER SUPPLY.	V_{CC} +5 Volts
PACKAGE	16 DIP
DESIGNER	Les Larson
INSTRUMENT USAGE	7704A A7704 R7704 7844 7504 7514 7904

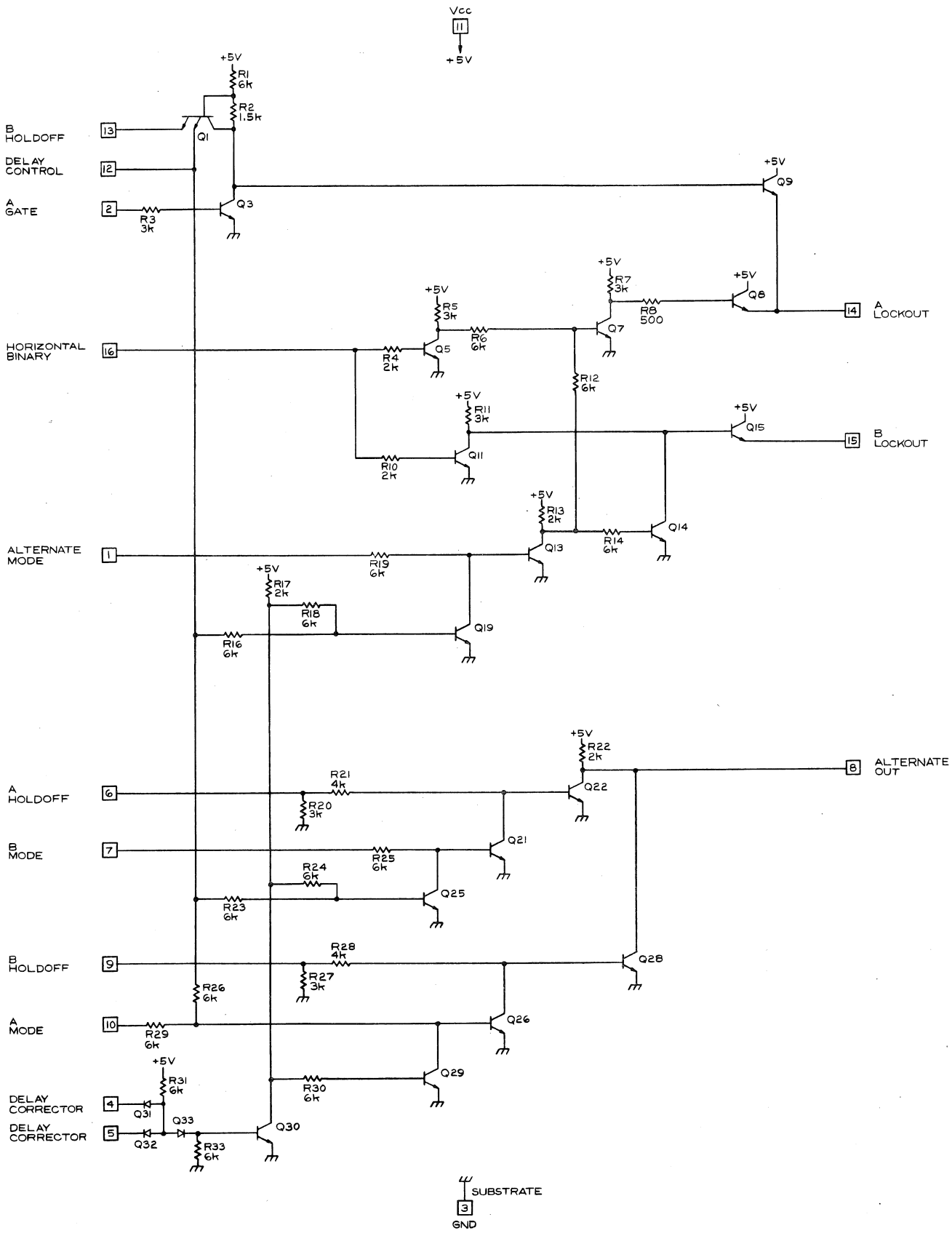

ENGR	M.H. Pettus	8-22-75	PROCESS	200Ω/□
DWN BY	J. Langley	8-19-75	PACKAGE	16 PIN DIP
CHK BY	David Van Cleve	10-23-75	DIE SIZE	45 mil X 45 mil
TYPE	MONOLITHIC	HORIZONTAL LOCKOUT LOGIC		M001
INTEGRATED CIRCUIT ENG/MFG TEKTRONIX, INC. BEAVERTON, OREGON, U.S.A.		PART NO. 155-0009-00		

CHOP DIVIDER AND BLANKING 155-0010-00 M004

DESCRIPTION

The chop divider receives a clock signal from the chop decoder and blanking circuit and counts it down by two for the vertical switch, and by four for the plug-in chop. It also provides a horizontal chop blanking pulse if the horizontal mode switch is CHOP.

PROCESS	200 Ω/Sq
POWER SUPPLY.	V_{CC} +5 Volts
PACKAGE	10 Lead TO-5
DESIGNER	Les Larson
INSTRUMENT USAGE	7704A A7704 R7704 7504 7514 7904

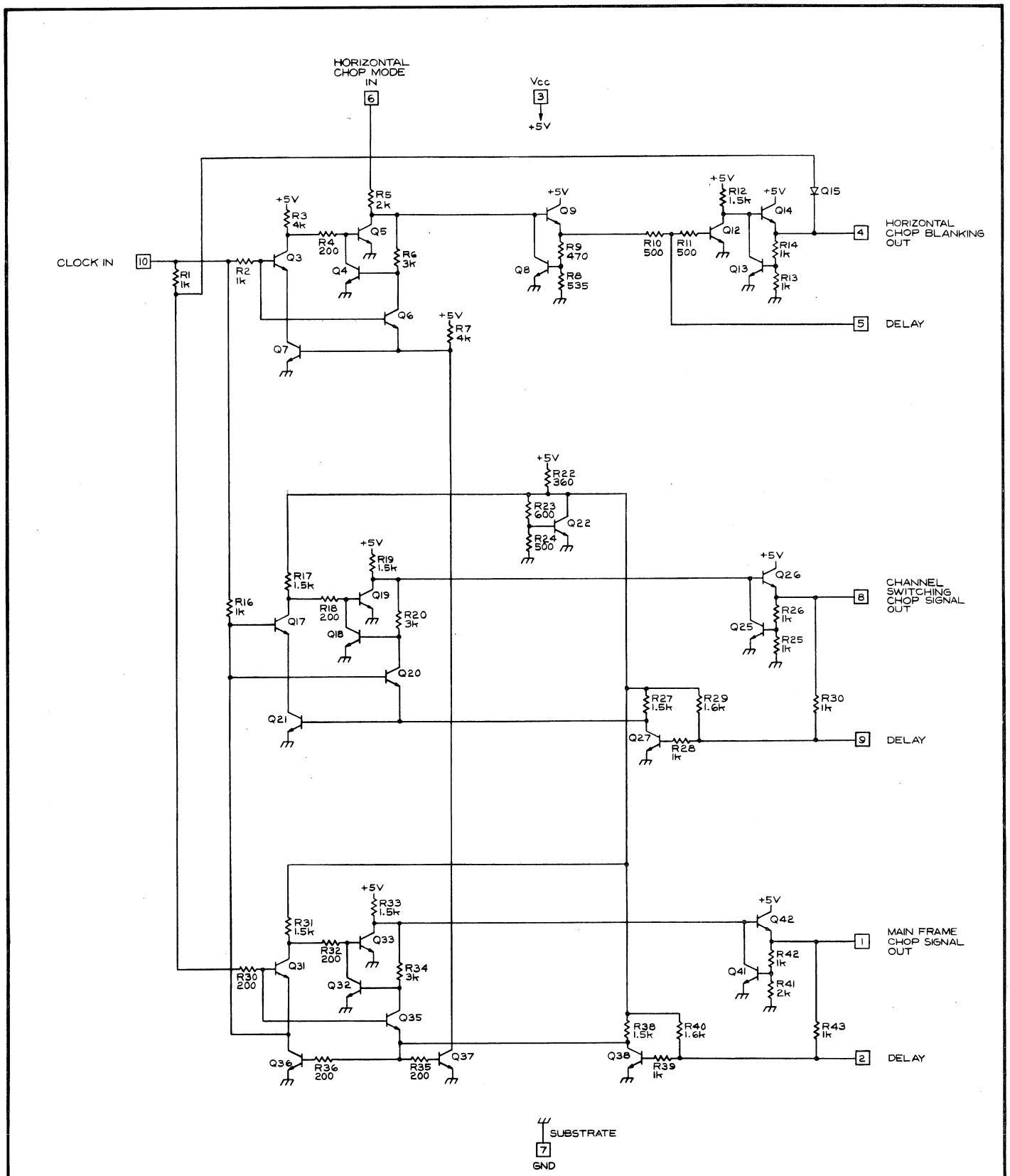

ENGR	M. H. Merton	9-9-75	PROCESS	200Ω/□
DWN BY	J. Langley	9-2-75	PACKAGE	10 LEAD TO-5
CHK BY	David Van Oleck	10-23-75	DIE SIZE	45mil X 40mil
TYPE	MONOLITHIC	CHOP DIVIDER & BLANKING (TYPE 3)		M004
INTEGRATED CIRCUIT ENG/MFG TEKTRONIX, INC. BEAVERTON, OREGON, U.S.A.		PART NO. 155-0010-00		

CLOCK AND CHOP BLANKING 155-0011-00 M012

DESCRIPTION

This Integrated Circuit generates the 2 MHz chop clock signal for triggering the chop counter (M004) as well as the chop blanking waveform. The blanking waveform can be delayed in time and varied in width over a certain range to accommodate different delay lines. It also has fine logical inputs which are the plug-in and mainframe modes that are used to decide if chop blanking should be used at a certain time.

PROCESS	200 Ω/Sq
POWER SUPPLY.	V_{CC} +5 Volts
PACKAGE	16 DIP
DESIGNER	Les Larson
INSTRUMENT USAGE	7704A, 7603, A7704, 7603G, R7704, 7603H, 7403, 7603K, 7504, 7613, 7514, 7633, 7904, 485, 7844, 4851, 7313, 4852, R7603, 7903, 7603N11, 7912

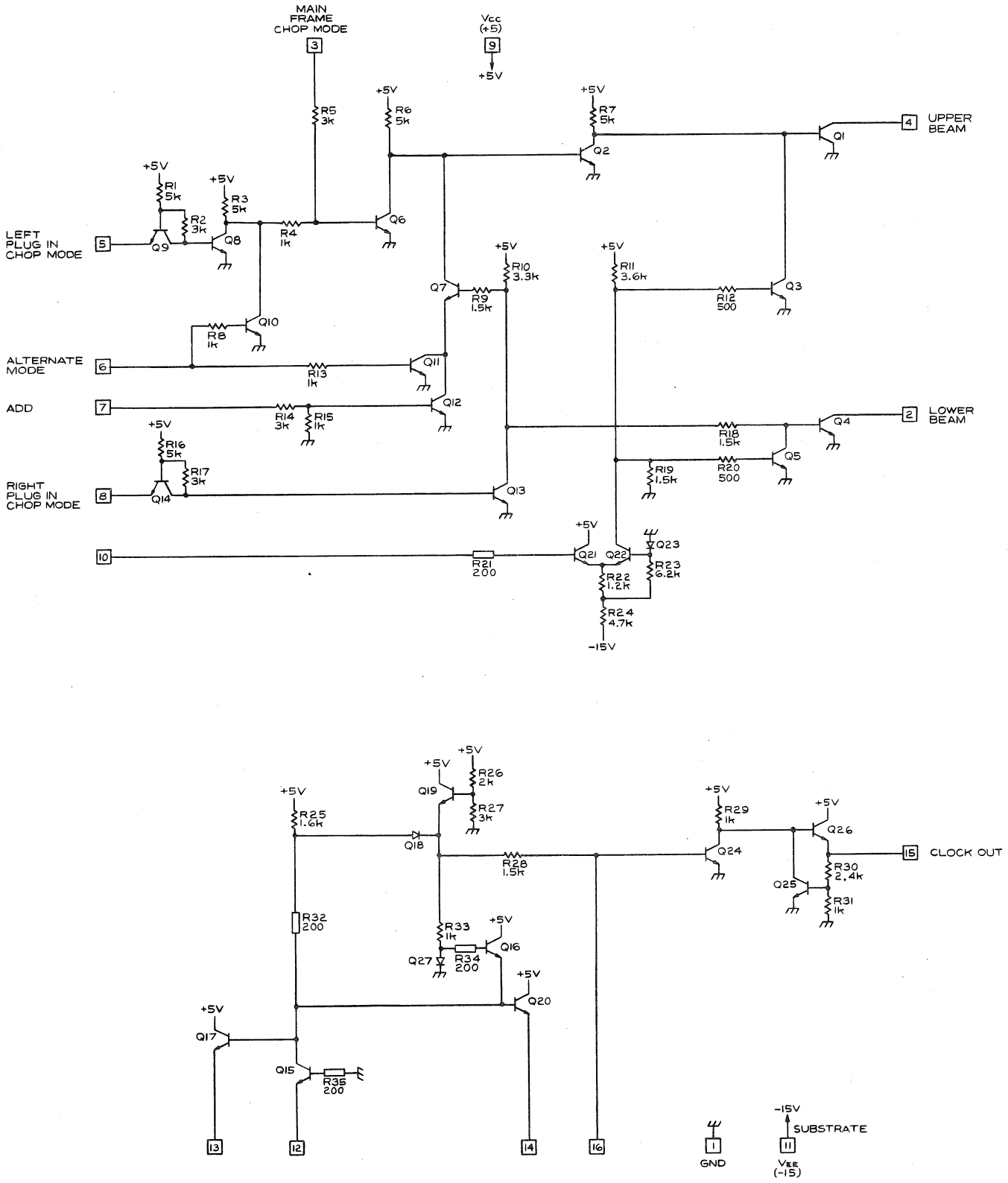

NOTE:
1. ⊟ INDICATES CROSS UNDER RESISTOR.

ENGR	M. H. Martin	9-9-75	PROCESS	200Ω/□
DWN BY	J. Langley	9-8-75	PACKAGE	16 PIN DIP
CHK BY	David Van Cleve	10-23-75	DIE SIZE	40mil X 50mil
TYPE	MONOLITHIC	CLOCK & CHOP BLANKING		M012
INTERGATED CIRCUITS ENG/MFG TEKTRONIX, INC. BEAVERTON, OREGON, U.S.A.		PART NO. 155-0011-00		

Z AXIS LOGIC 155-0012-00 M015

DESCRIPTION

This Integrated Circuit is a signal conditioner for the main Z Axis Amplifier. It is under control of the horizontal switch drive, "A" gate, "B" gate, delay control, "A" intensity control and "B" intensity control. With these signals, it properly selects, at one output, either "A" intensity, or "A" intensified by "B" for delaying modes.

Additional functions are chop blanking for vertical and horizontal, external and plug-in Z axis input, and fast limiting of the composite signal. The signals are further limited at slow sweep speeds to prevent burning of the CRT.

PROCESS	200 Ω/Sq
POWER SUPPLY.	V_{CC} +5 Volts
PACKAGE	16 DIP
DESIGNER	Les Larson
INSTRUMENT USAGE	485, 4851, 4852, 7704, A7704, R7704, 7704A, 7504, 7514, 7844, 7903, 7904, 7912

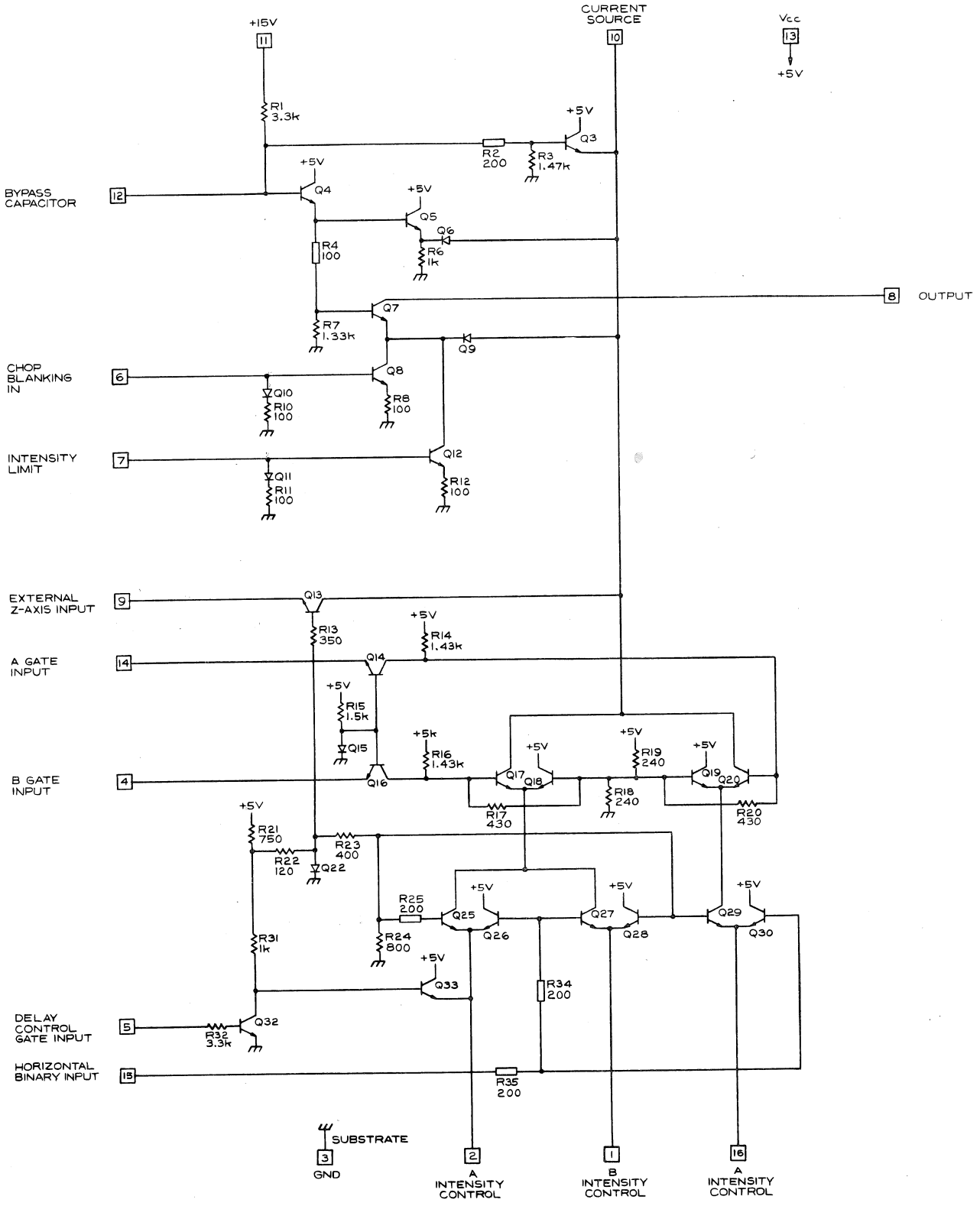

NOTE:
1. ▭ INDICATES CROSS UNDER RESISTOR.

ENGR	J.L.	9-26-75	PROCESS	200Ω/□
DWN BY	J. Langley	9-11-75	PACKAGE	16 PIN DIP
CHK BY	David Van Cleve	10-23-75	DIE SIZE	45mil X 50mil
TYPE	MONOLITHIC	Z-AXIS LOGIC		M015
INTERGRATED CIRCUIT ENG/MFG TEKTRONIX, INC. BEAVERTON, OREGON, U.S.A.		PART NO. 155-0012-00		

MILLER INTEGRATOR AND DELAY PICK OFF

155-0028-00
155-0028-01
155-0042-02
155-0042-03

M018G

DECRIPTION

The M018 is a gated Miller Integrator with a delay pick-off comparator. Maximum slew rate is 10 V/µS. RTL logic input controls the Miller run up and the delayed gate output.

PROCESS . . . . . 200 Ω/Sq, P-

POWER SUPPLY. . . . . V_{EE} +15 Volts, I_{EE} -11 mA

PACKAGE . . . . . 10 Lead T05

DESIGNER . . . . . Joe Burger

INSTRUMENT USAGE . . . . . .

155-0028-00

1480	1481
1482	1485
26G1	26G2
26G3	7L12
7L13	5S14
7S14	

155-0028-01

432
434

155-0042-02

1401A
5S14N
7L12
7L13
7S14

155-0042-03

7B53	314K
5B10N	5B12N
5B40	5B42
5B42G	55B31
5B53	RG501
5B10	5B12
5B53A	

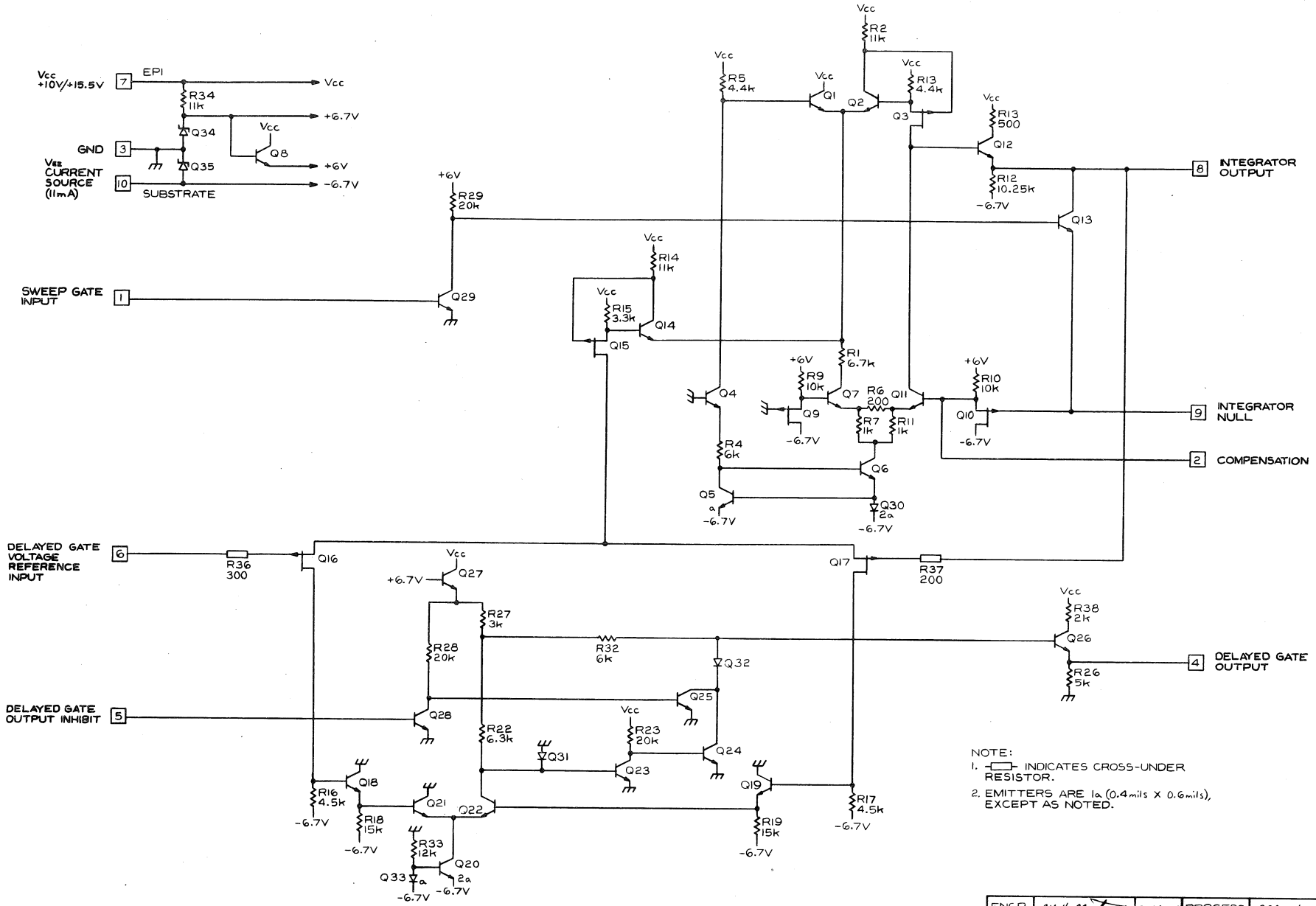

NOTE:

1. -▭- INDICATES CROSS-UNDER RESISTOR.
2. EMITTERS ARE 1a (0.4 mils X 0.6 mils), EXCEPT AS NOTED.

ENGR	M. H. Mutrat	6-10-76	PROCESS	200 Ω/□ P-	
DWN BY	J. Langley	4-1-76	PACKAGE	10 LEAD TO-5	
CHK BY	Linda Bayer	7-13-76	DIE SIZE	50mil X 50mil	
TYPE	MONOLITHIC	MILLER INTEGRATOR & DELAY PICKOFF			M018G
INTEGRATED CIRCUIT ENG/MFG TEKTRONIX, INC. BEAVERTON, OREGON, U.S.A.		PART NO. 155-0028-00			

ANALOG TO DECIMAL CONVERTER 155-0014-01 M019D

DESCRIPTION

The M019 converts differential analog input voltage to one of ten output indications, with a transition spacing of 500 mV ± 2% and a transition zone of less than 5 mV. The outputs may be wired as current steering, in which case one of the circuit terminals accepts the current input, or in the form of saturated transistors. Ratings of the output circuits are 15V and 25 mA.

PROCESS	200 Ω/Sq
POWER SUPPLY.	V_{CC} +15 Volts
PACKAGE	16 DIP
DESIGNER	Barrie Gilbert
INSTRUMENT USAGE	7704A, A7704, R7704, 7613, 7633, 5403, 5441, 7844, 5443, 7903, 7912, 7504, 7514, 7904, 7313, P7001950C, P7001953Q, 7603, 7603G, 7603H, 7603K, 7J20, 5440, P7001

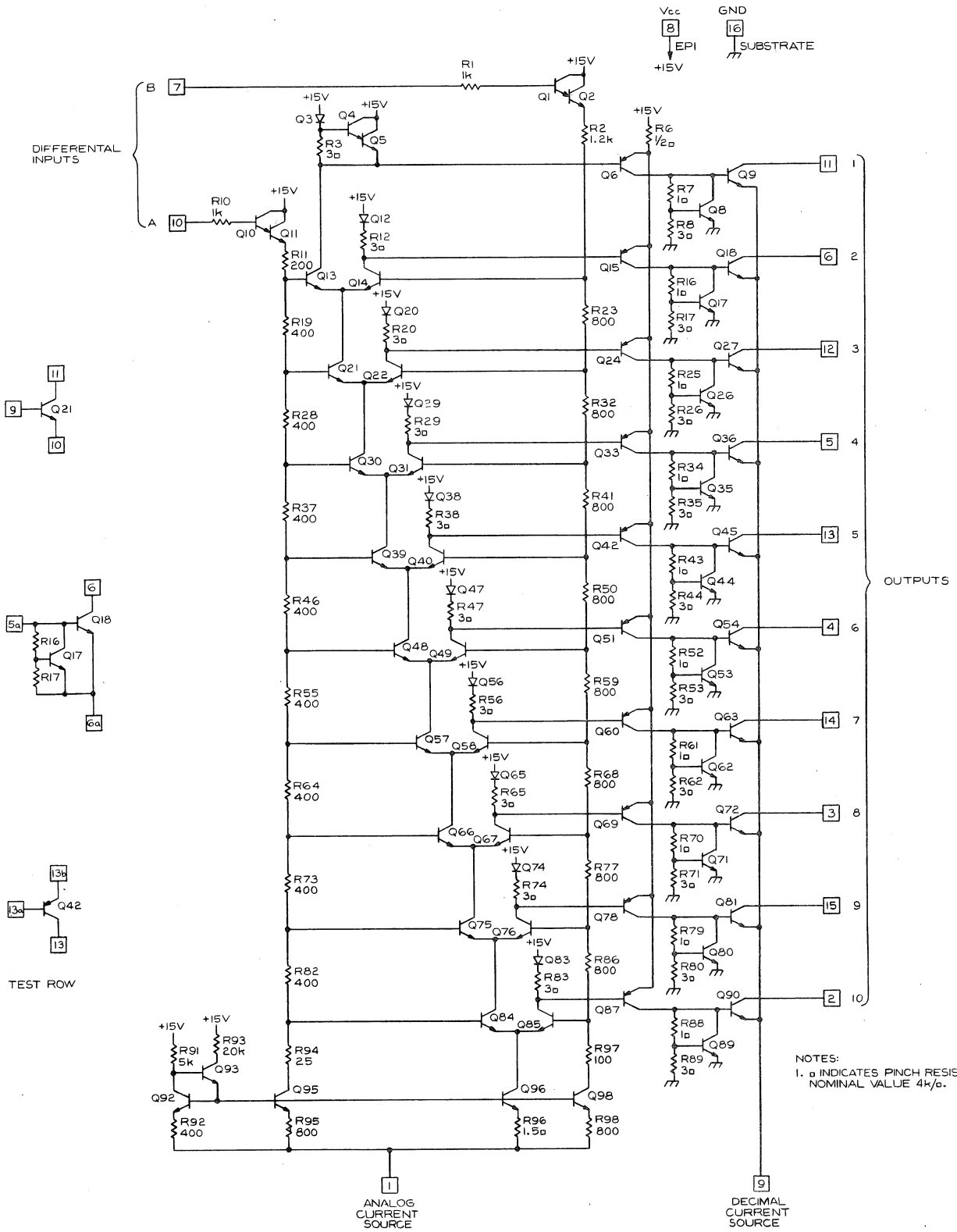

NOTES:
1. Ω INDICATES PINCH RESISTOR NOMINAL VALUE 4k/Ω.

ENGR	M.H. Nelson	3-4-76	PROCESS	200Ω/□
DWN BY	J. Langley	2-12-76	PACKAGE	16 PIN DIP
CHK BY	Linda Bayer	3-10-76	DIE SIZE	50mil X 55mil
TYPE	MONOLITHIC	ANALOG TO DECIMAL CONVERTER		M019D
INTEGRATED CIRCUIT ENG/MFG TEKTRONIX, INC. BEAVERTON, OREGON, U.S.A.		PART NO. 155-0014-01		

DATA SWITCH 155-0015-01 M020F

DESCRIPTION

A current-steering switching circuit designed specifically for the know-readout system.

Accepts nine inputs at currents in the range Ø mA - 1 mA and selects one under the control of a BCD code. The output is from an NPN collector. The inputs are virtual grounds within ± 100 mV of ground potential for input range of ± 1 mA.

PROCESS	200 Ω/Sq
POWER SUPPLY.	V_{CC} +5 Volts
PACKAGE	16 DIP
DESIGNER	Barrie Gilbert
INSTRUMENT USAGE	7704A, A7704, R7704, 5403, 5440, 5441, 5443, 7844, 7913, 7903, P7001, 7904, 7504, 7514, 7313, 7613, 7633, 7603, 7603G, 7603H, 7603K

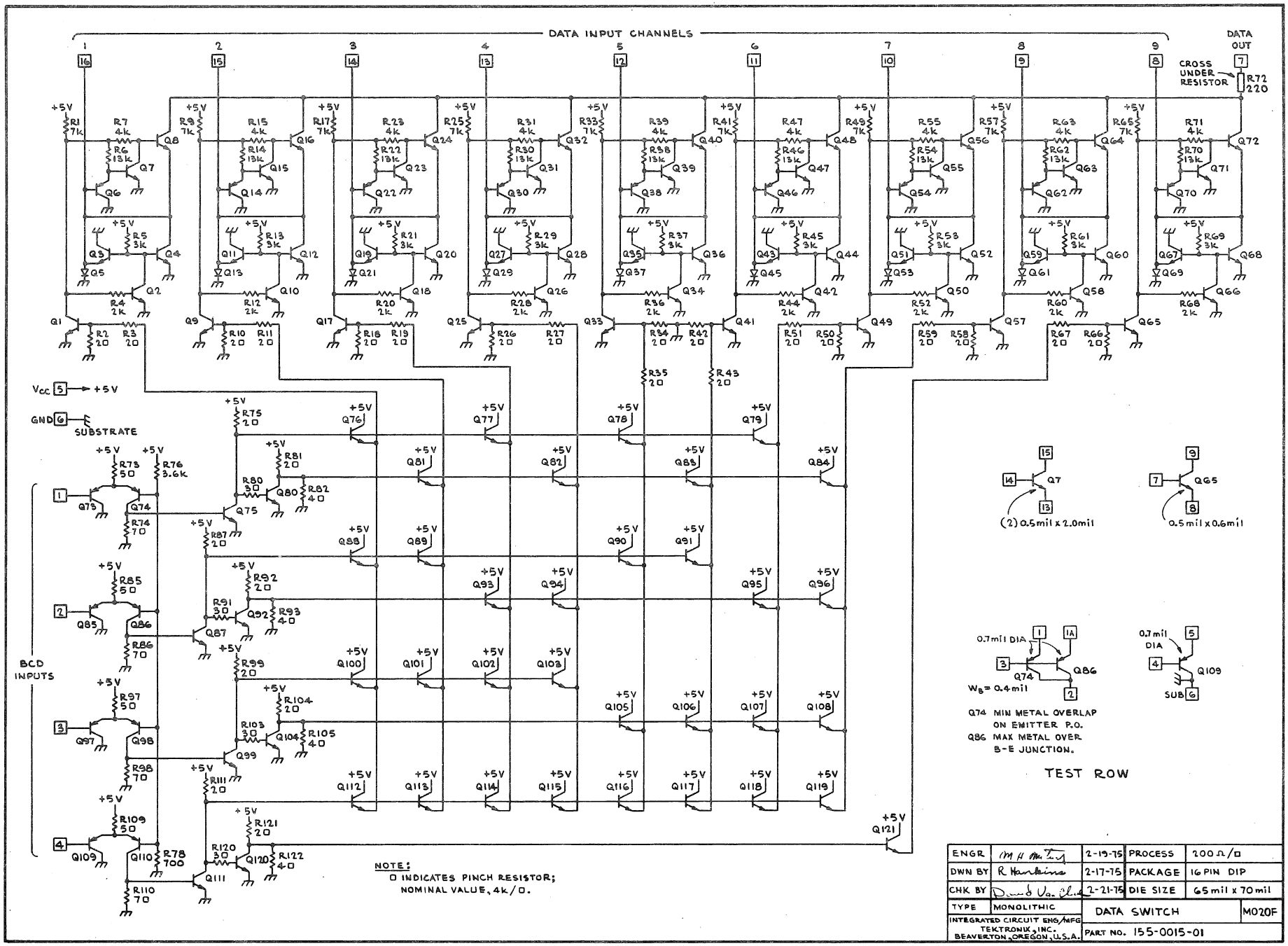
DATA INPUT CHANNELS
DATA OUT
CROSS UNDER RESISTOR
R72 220
Vcc 5 → +5V
GND 6
SUBSTRATE
BCD INPUTS
NOTE:
□ INDICATES PINCH RESISTOR;
NOMINAL VALUE, 4k/□.
(2) 0.5mil x 2.0mil
0.5 mil x 0.6mil
0.7mil DIA
W_B = 0.4mil
0.7mil DIA
SUB
Q74 MIN METAL OVERLAP ON EMITTER P.O.
Q86 MAX METAL OVER B-E JUNCTION.
TEST ROW
ENGR
DWN BY
CHK BY
TYPE
MONOLITHIC
INTEGRATED CIRCUIT ENG/MFG
TEKTRONIX, INC.
BEAVERTON, OREGON, U.S.A.
2-19-75
2-17-75
2-21-75
PROCESS
200 Ω/□
PACKAGE
16 PIN DIP
DIE SIZE
65 mil x 70 mil
DATA SWITCH
M020F
PART NO. 155-0015-01

HORIZONTAL CHOP AND ALT. BINARY (TYPE 2) 155-0013-01 M022

DESCRIPTION

This circuit receives horizontal mode switch information, alternating signals, and chopping signals (.5 MHz), and produces an output to the horizontal switch as to which sweep should be received. This same output is used in the horizontal lockout logic and in both vertical alt. binaries.

PROCESS	200 Ω/Sq
POWER SUPPLY.	V_{CC} +5 Volts
PACKAGE	10 Lead TO-5
DESIGNER	Les Larson
INSTRUMENT USAGE	7704A A7704 R7704 7504 7514 7904

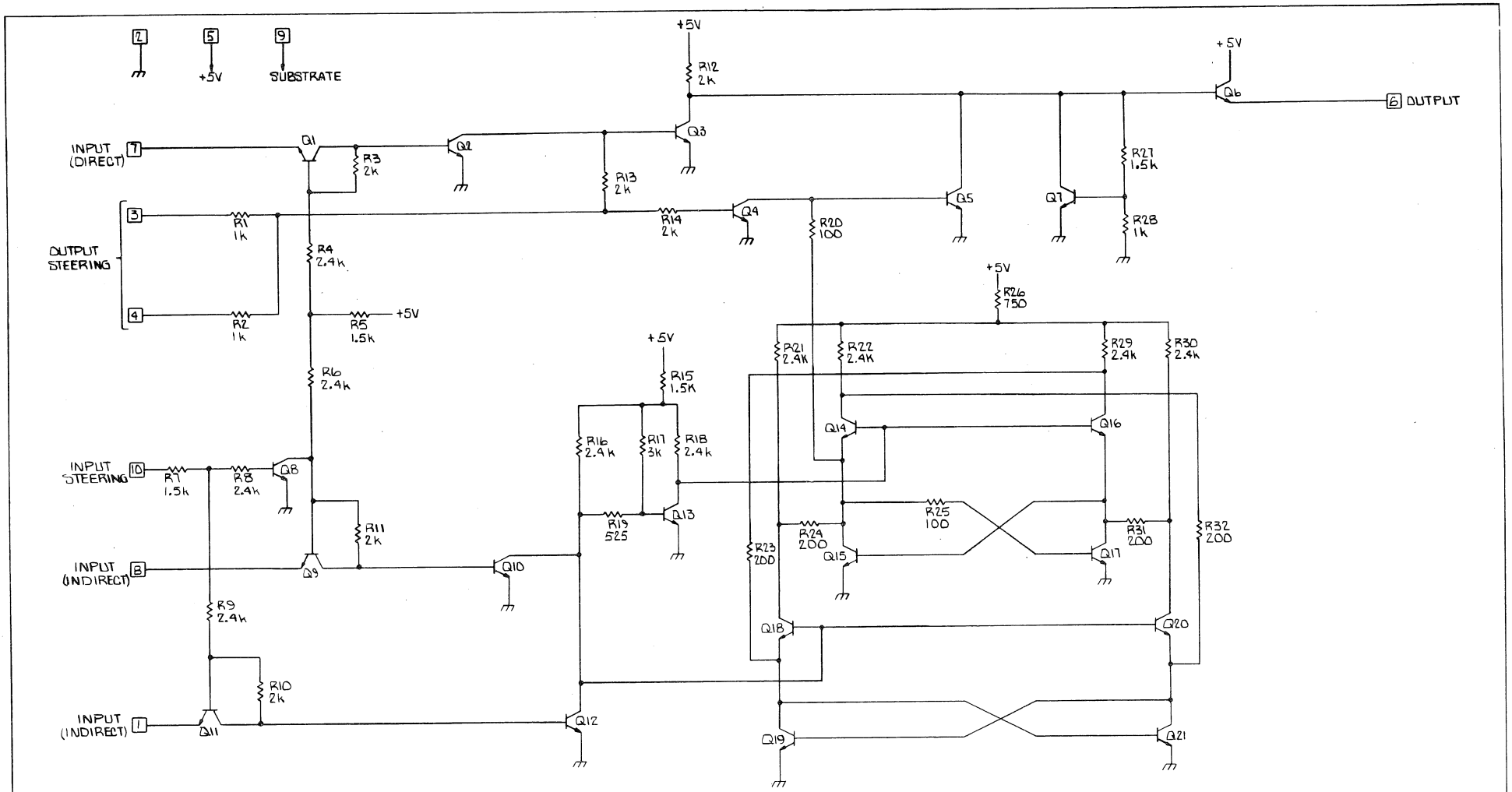

ENGR		11-11-74	PROCESS	200Ω/□
DWN BY	Pam Greene	11-9-74	PACKAGE	10 PIN TO-5
CHK BY	Joe McBrady	11-25-74	DIE SIZE	45 mil × 50 mil
TYPE	MONOLITHIC	DC BINARY		M022
INTEGRATED CIRCUIT ENG/MFG TEKTRONIX, INC. BEAVERTON, OREGON, U.S.A.		PART NO. 155-0013-00		

DECADE COUNTER 155-0017-00 M025

DESCRIPTION

The M025 is a decade counter having power-handling output capabilities, and all ten outputs brought out to pins. It features an auxiliary count output pin, a reset input and versatile operating modes. Count input rates up to 5 MHz are acceptable.

PROCESS	200 Ω/Sq
POWER SUPPLY.	V_{CC} +5 Volts
PACKAGE	16 DIP
DESIGNER	Barrie Gilbert
INSTRUMENT USAGE	7704A, A7704, R7704, 5403, 5440, 5441, 5443, 7844, 7912, 7504, P7001, 7514, 7904, 7903, 7313, 7613, 7633, 7603, 7603G, 7603H, 7603K

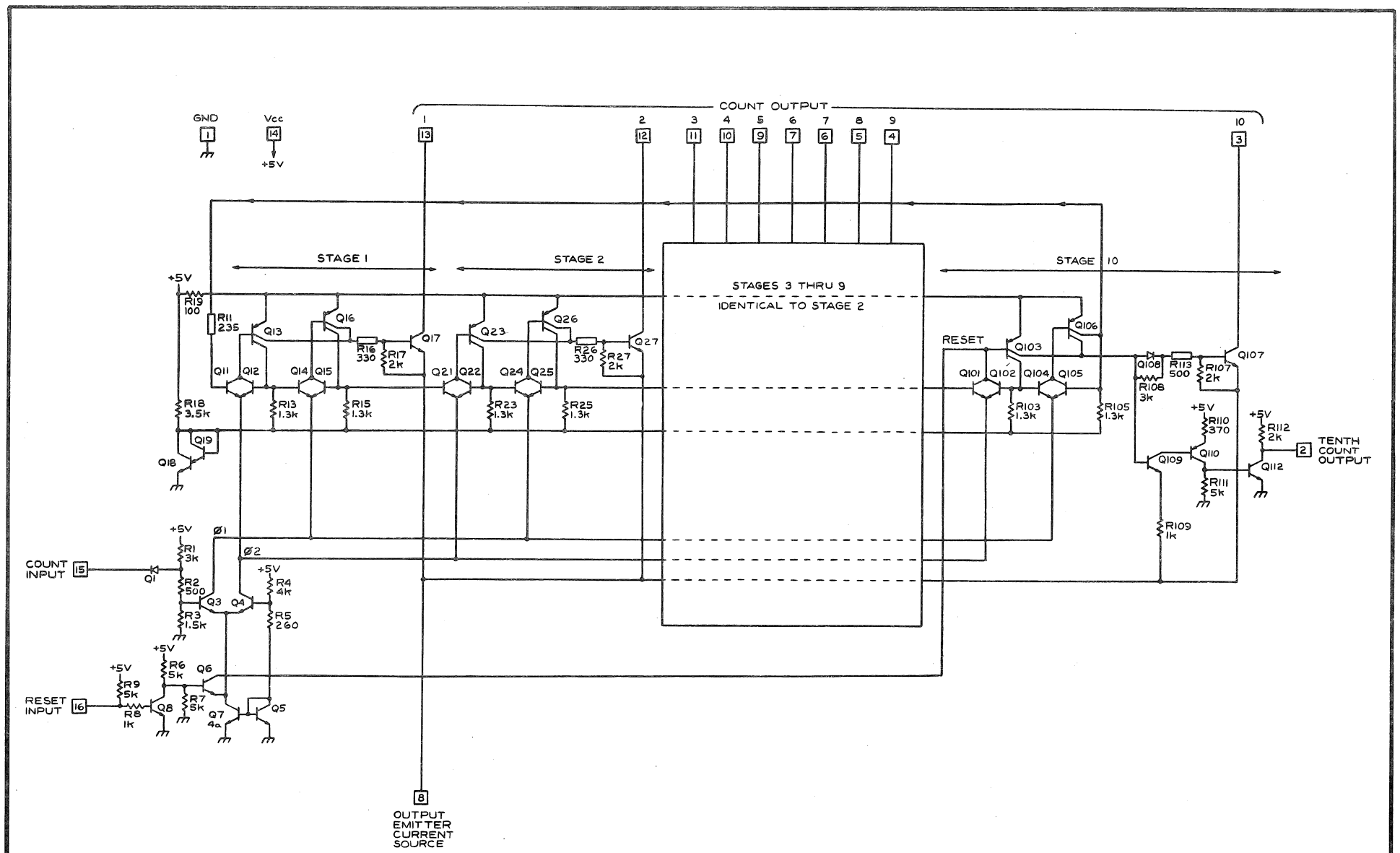

ENGR	M. H. Martin	3-19-75	PROCESS	200 n/a
DWN BY	J. Langley	3-17-75	PACKAGE	16 PIN DIP
CHK BY	David Van Cleve	10-23-75	DIE SIZE	60 X 65 mil
TYPE	MONOLITHIC	DECADE COUNTER		M025D
INTEGRATED CIRCUIT ENG/MFG TEKTRONIX, INC. BEAVERTON, OREGON, U.S.A.		PART NO. 155-0017-00		

ZERO LOGIC 155-0018-00 M026

DESCRIPTION

The M026 is a special-purpose circuit for use in the new generation knob-readout system. It comprises an input logic section, four memory cells, an output logic section and a binary-to-ternary conversion stage.

PROCESS	200 Ω/Sq
POWER SUPPLY.	V_{CC} +5 Volts
PACKAGE	16 DIP
DESIGNER	Les Larson
INSTRUMENT USAGE	7704A, A7704, R7704, 5403, 5440, 5441, 5443, 7844, 7912, 7504, P7001, 7514, 7904, 7903, 7313, 7613, 7633, 7603, 7603G, 7603H, 7603K

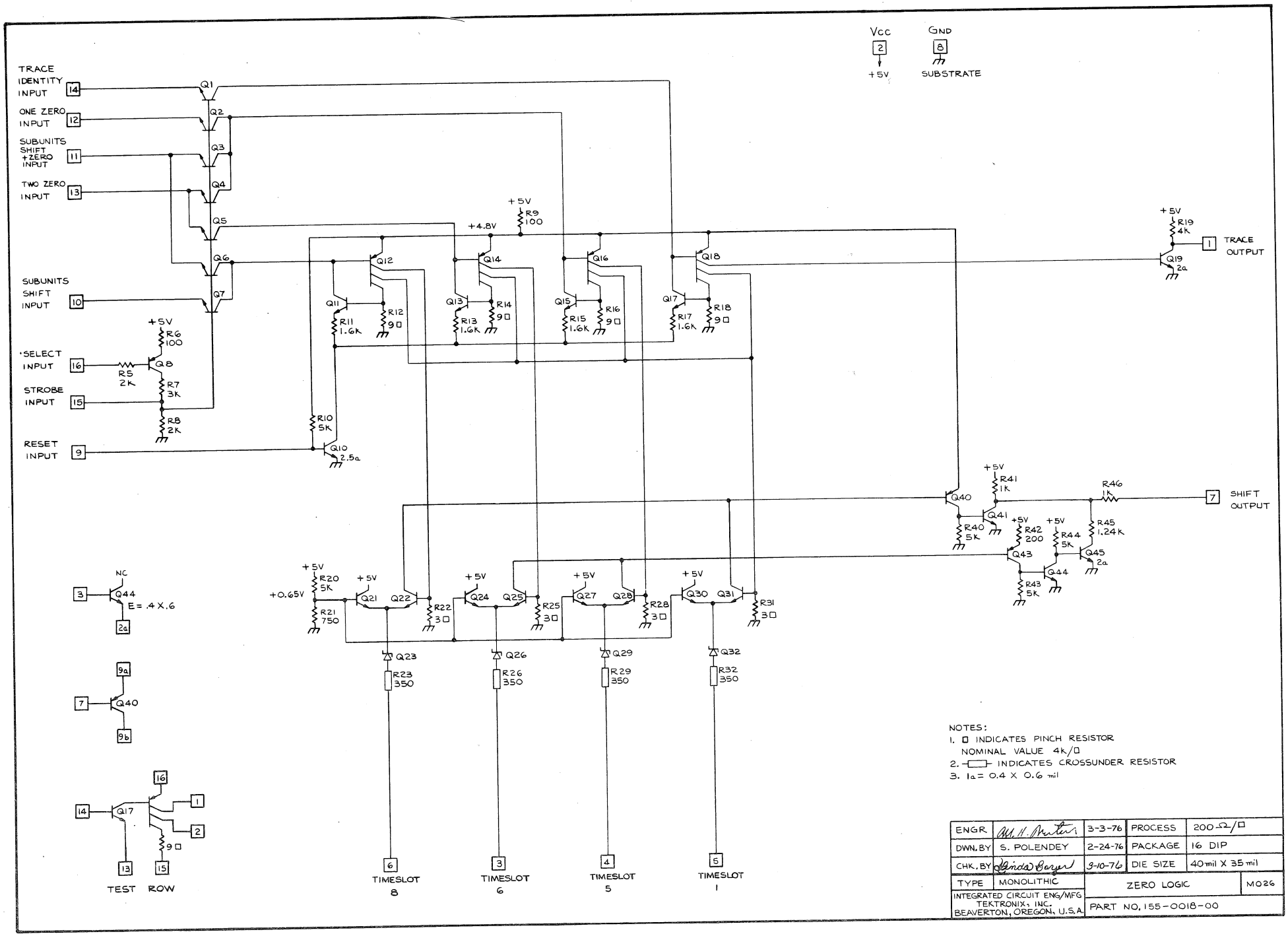

NOTES:
1. □ INDICATES PINCH RESISTOR NOMINAL VALUE 4K/□
2. —▭— INDICATES CROSSUNDER RESISTOR
3. 1a = 0.4 X 0.6 mil

ENGR.	M. H. Porter	3-3-76	PROCESS	200 Ω/□
DWN. BY	S. POLENDEY	2-24-76	PACKAGE	16 DIP
CHK. BY	Linda Barger	3-10-76	DIE SIZE	40 mil X 35 mil
TYPE	MONOLITHIC	ZERO LOGIC		M026
INTEGRATED CIRCUIT ENG/MFG TEKTRONIX, INC. BEAVERTON, OREGON, U.S.A.		PART NO. 155-0018-00		

DECIMAL POINT AND SPACING 155-0019-00 M027

DESCRIPTION

The M027 is used to produce a positioning signal (10 level staircase) for the new generation readout system, and also to position the decimal point. This integrated circuit consists of a decade counter, digital-to-analog converter, and input logic.

PROCESS	200 Ω/Sq
POWER SUPPLY.	V_{CC} +5 Volts
PACKAGE	16 DIP
DESIGNER	Les Larson
INSTRUMENT USAGE	7704A, R7704, A7704, 5403, 5441, 5443, 7944, 7912, 7504, 7514, P7001, 7904, 7903, 7313, 7613, 7633, 7603, 7603G, 7603H, 7603K, 5440

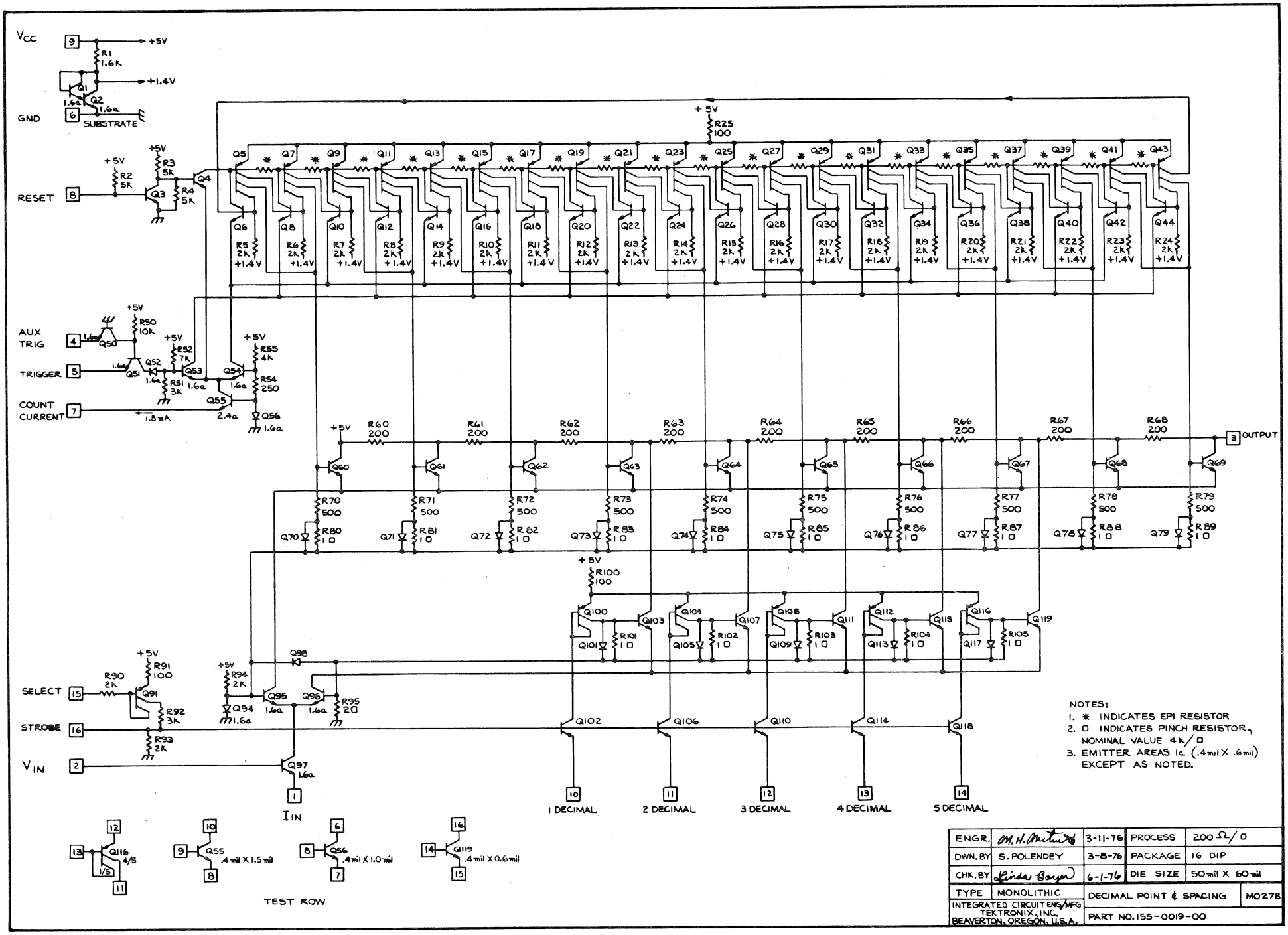
VCC
GND
SUBSTRATE
RESET
AUX TRIG
TRIGGER
COUNT CURRENT
SELECT
STROBE
VIN
IIN
OUTPUT
1 DECIMAL
2 DECIMAL
3 DECIMAL
4 DECIMAL
5 DECIMAL
TEST ROW
.4 mil X 1.5 mil
.4 mil X 1.0 mil
.4 mil X 0.6 mil
NOTES:
1. * INDICATES EPI RESISTOR
2. □ INDICATES PINCH RESISTOR, NOMINAL VALUE 4 K/□
3. EMITTER AREAS 1a (.4 mil X .6 mil) EXCEPT AS NOTED.
ENGR. M. H. Martin 3-11-76
DWN. BY S. POLENDEY 3-8-76
CHK. BY Linda Boyer 6-1-76
PROCESS 200 Ω/□
PACKAGE 16 DIP
DIE SIZE 50 mil X 60 mil
TYPE MONOLITHIC
INTEGRATED CIRCUIT ENG/MFG
TEKTRONIX, INC.
BEAVERTON, OREGON, U.S.A.
DECIMAL POINT & SPACING
M027B
PART NO. 155-0019-00

OUTPUT ASSEMBLER 155-0020-00 M028

DESCRIPTTION

This integrated circuit produces a display format signal (X- and Y- waveforms) from binary and analog input signals. The M026 is part of the new generation readout system.

PROCESS . . . . . 200 Ω/Sq

POWER SUPPLY. . . . . V_{CC} +5 Volts, +15 Volts

PACKAGE . . . . . 16 DIP

DESIGNER . . . . . Les Larson

INSTRUMENT USAGE . . . . . .

7704A	7904
A7704	7903
R7704	7313
5403	7613
5441	7633
5443	7603
7844	7603G
7912	7603H
7504	7603K
7514	5440
P7001	

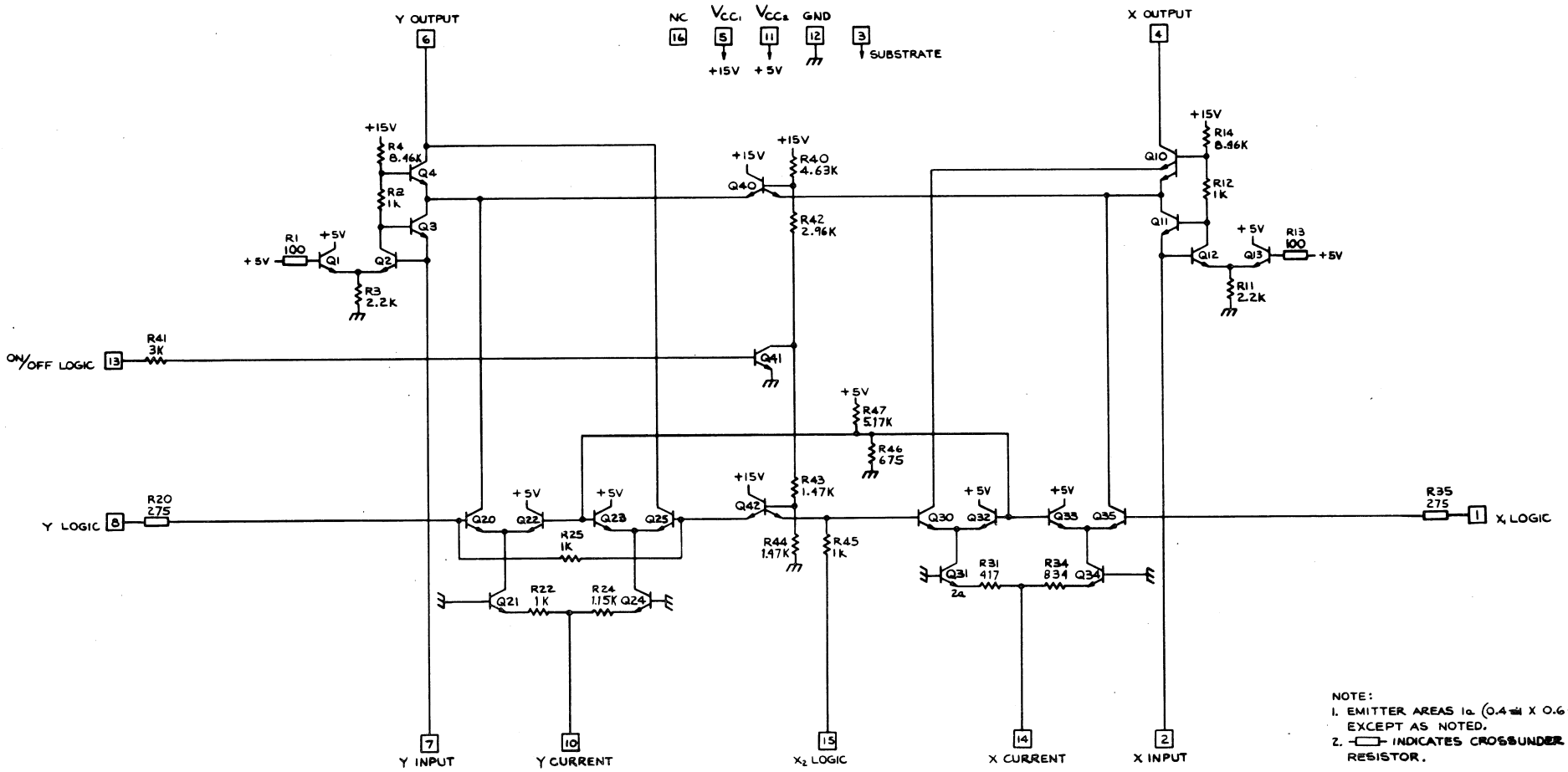

NOTE:
1. EMITTER AREAS 1a (0.4 mil X 0.6 mil) EXCEPT AS NOTED.
2. -▭- INDICATES CROSSUNDER RESISTOR.

ENGR	M.H. Matthews	10/29/79	PROCESS	200 Ω/□
DWN BY	JIM NAMHIE	10/29/79	PACKAGE	16 PIN DIP
CHK BY	BOB GAULT	10-30-79	DIE SIZE	40 mil X 45 mil
TYPE	MONOLITHIC	OUTPUT ASSEMBLER		M0288
INTEGRATED CIRCUIT ENGRG TEKTRONIX, INC. BEAVERTON, OREGON, U.S.A.		PART NO. 155-0020-00		

TIMING GENERATOR 155-0021-00 M029C

DESCRIPTION

This integrated circuit generates a timing clock, a shaped negative pulse for the M025 (155-0017-00), a scanning ramp for the M024, and X-Y on-off and intensity controls for the Z axis.

PROCESS	200 Ω/Sq
POWER SUPPLY.	V_{CC} +5V, V_{EE} -15V
PACKAGE	16 DIP
DESIGNER	Les Larson
INSTRUMENT USAGE	7704A 7904 A7704 7903 R7704 7313 5403 7613 5441 7633 7844 7603G 7912 7603H 7504 7603K 7514 5440 P7001

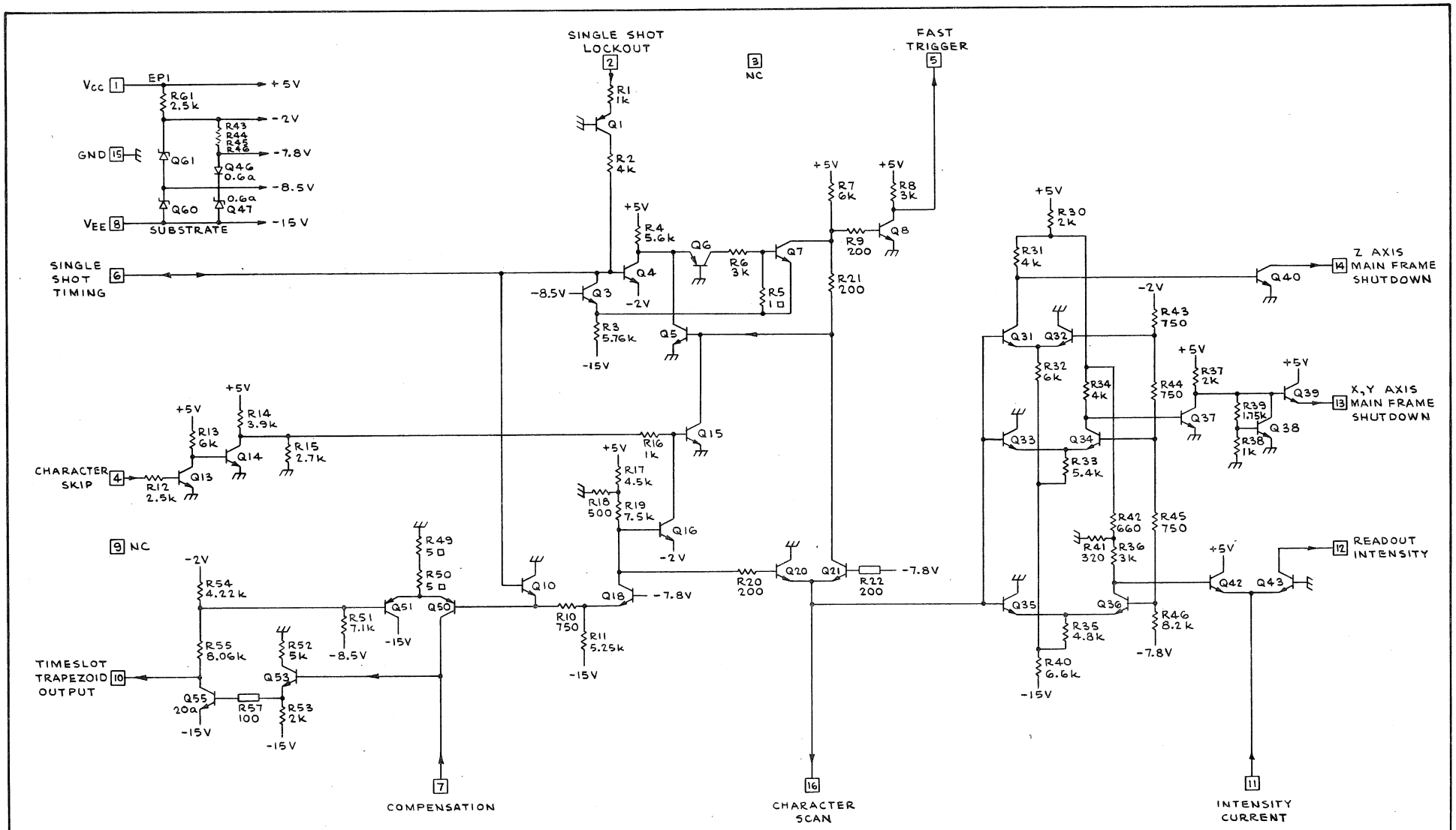

NOTES:

1. □ INDCATES PINCH RESISTOR, NOMINAL VALUE 4k/□.
2. -▭- INDICATES CROSSUNDER RESISTOR.
3. 1a = 13 x 25 μ.

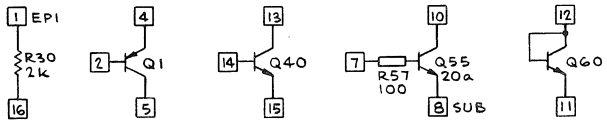

TEST ROW

REVISIONS					
M.H. Martin	6-20-77	R. Hawkins	6-17-77	David Vom Clee	6-20-77
ENGINEERING	DATE	DRAWN BY	DATE	PRODUCTION	DATE

ENGR	M.H. Martin	6-20-77	PROCESS	200 Ω/□
DWN BY	Ron Hawkins	6-17-77	PACKAGE	16 PIN DIP
CHK BY	David Vom Clee	6-20-77	DIE SIZE	48 x 57 mils
TYPE	MONOLITHIC	TIMING GENERATOR		M029C
INTEGRATED CIRCUIT ENG/MFG TEKTRONIX, INC. BEAVERTON, OREGON, U.S.A.		PART NO. 155-0021-00		

READOUT SYSTEM

155-0004-01	M33
155-0005-00	M34
155-0006-01	M35
155-0007-01	M38
155-0008-01	M39

DESCRIPTION

The 576 Readout System is comprised of four fiberoptic readout modules. Three of these modules are each driven by a M38 and M39 (155-0007-01 and 155-0008-01). The fourth module displays the ratio of vertical current/division to base step/division. This Beta/division readout is driven the M33, M34, and M35 (155-0004-01, 155-0005-00, and 155-0006-00). The integrated circuits are programmed from switch closures or external inputs and perform the required logic function to drive the lamps in the readout.

PROCESS . . . . . 200 Ω/Sq

POWER SUPPLY. . . . . V_{CC} +5 Volts

PACKAGE . . . . . 16 DIP

DESIGNER . . . . . Mike Metcalf

INSTRUMENT USAGE 576

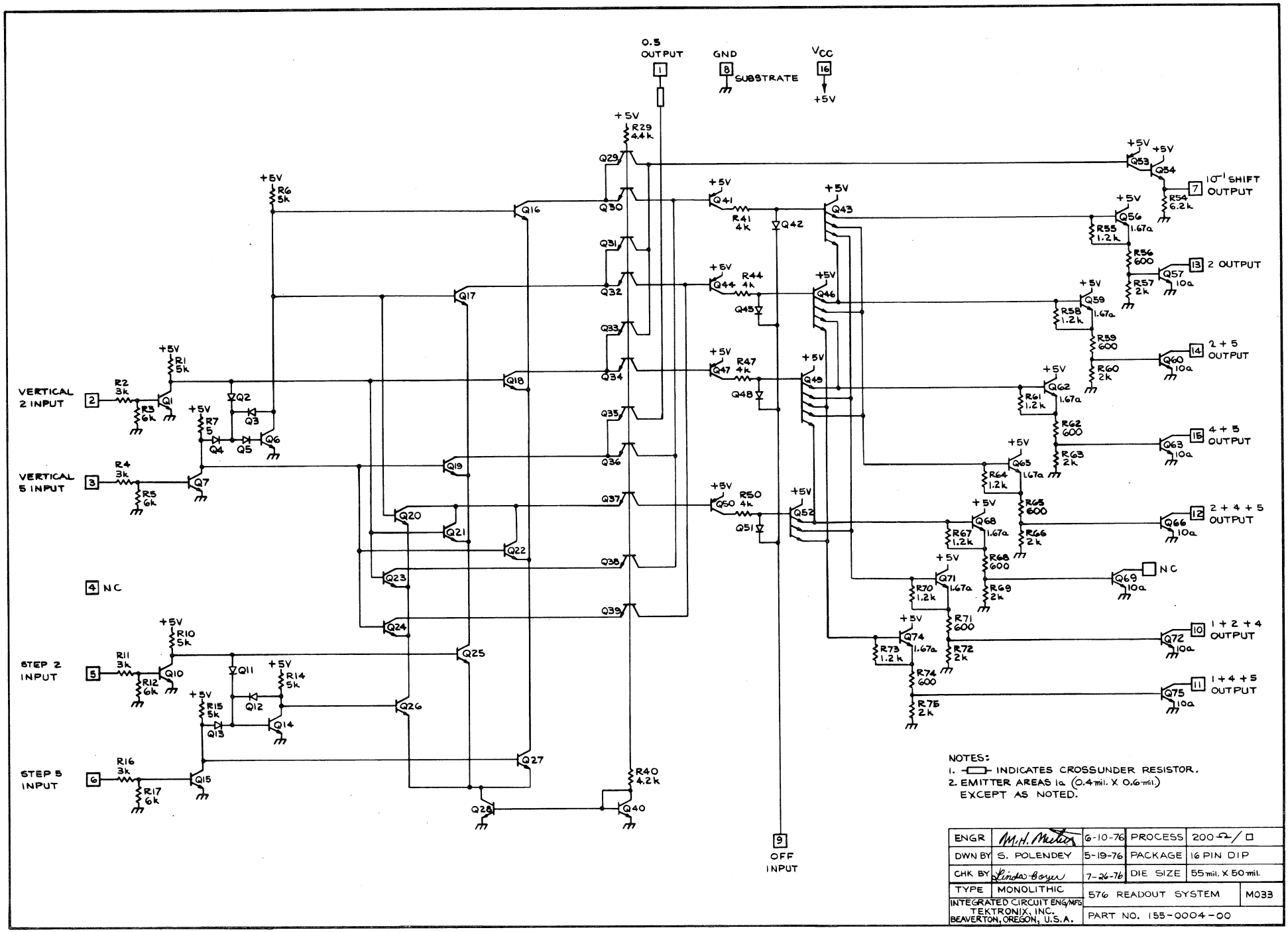

NOTES:
1. -□- INDICATES CROSSUNDER RESISTOR.
2. EMITTER AREAS 1a (0.4 mil. X 0.6 mil.) EXCEPT AS NOTED.

ENGR	M.H. Multer	6-10-76	PROCESS	200 Ω/□
DWN BY	S. POLENDEY	5-19-76	PACKAGE	16 PIN DIP
CHK BY	Linda Boyer	7-26-76	DIE SIZE	55 mil. X 50 mil.
TYPE	MONOLITHIC	576 READOUT SYSTEM		M033
INTEGRATED CIRCUIT ENG/MFG TEKTRONIX, INC. BEAVERTON, OREGON, U.S.A.		PART NO. 155-0004-00		

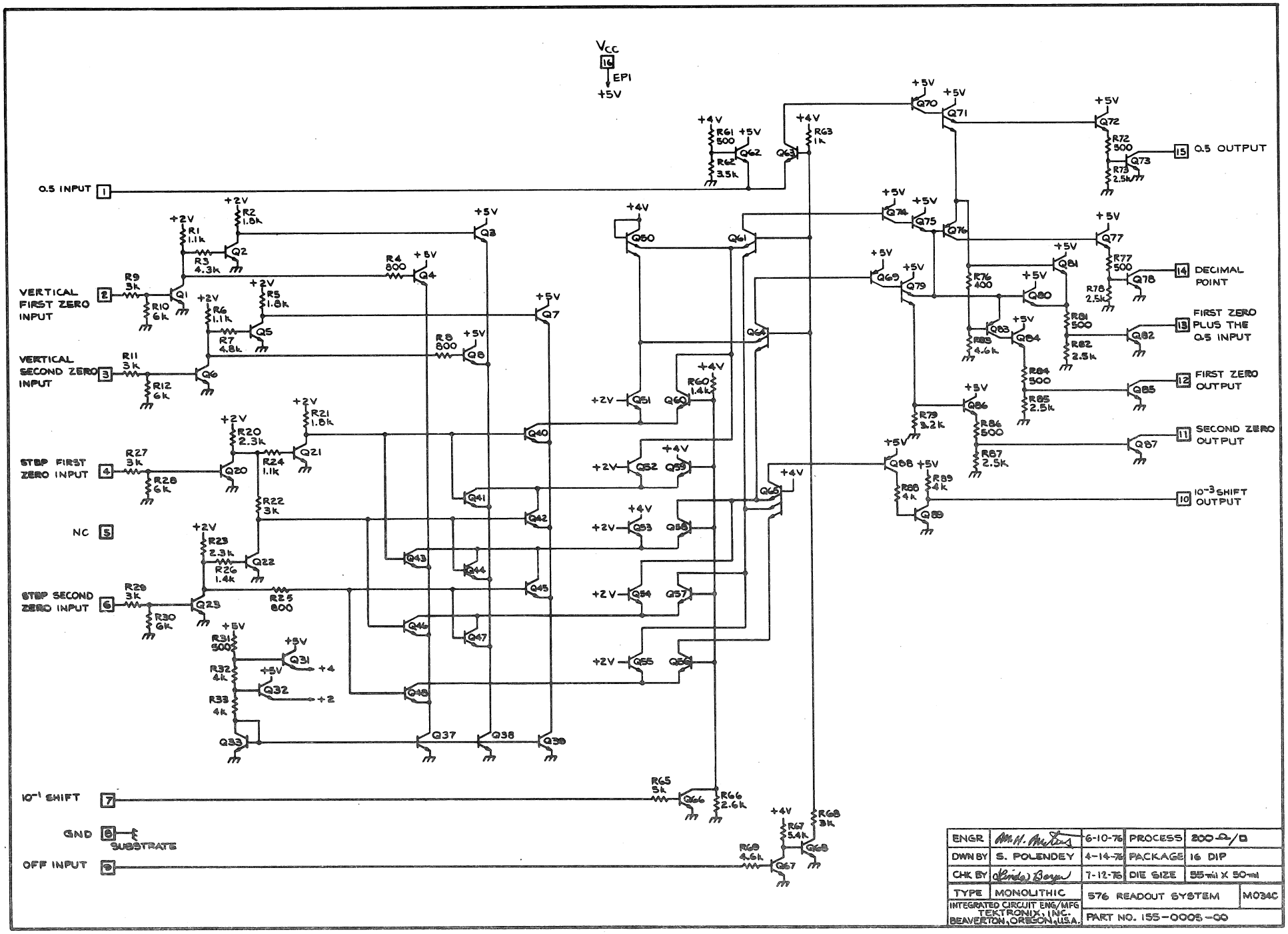
VCC
16
EPI
+5V
0.5 INPUT 1
VERTICAL FIRST ZERO INPUT 2
VERTICAL SECOND ZERO INPUT 3
STEP FIRST ZERO INPUT 4
NC 5
STEP SECOND ZERO INPUT 6
10⁻¹ SHIFT 7
GND 8
SUBSTRATE
OFF INPUT 9
15 0.5 OUTPUT
14 DECIMAL POINT
13 FIRST ZERO PLUS THE 0.5 INPUT
12 FIRST ZERO OUTPUT
11 SECOND ZERO OUTPUT
10 10⁻³ SHIFT OUTPUT
ENGR
6-10-76
PROCESS
200 Ω/□
DWN BY
S. POLENDEY
4-14-76
PACKAGE
16 DIP
CHK BY
7-12-76
DIE SIZE
55-mil X 50-mil
TYPE
MONOLITHIC
576 READOUT SYSTEM
M034C
INTEGRATED CIRCUIT ENG/MFG
TEKTRONIX, INC.
BEAVERTON, OREGON, U.S.A.
PART NO. 155-0005-00

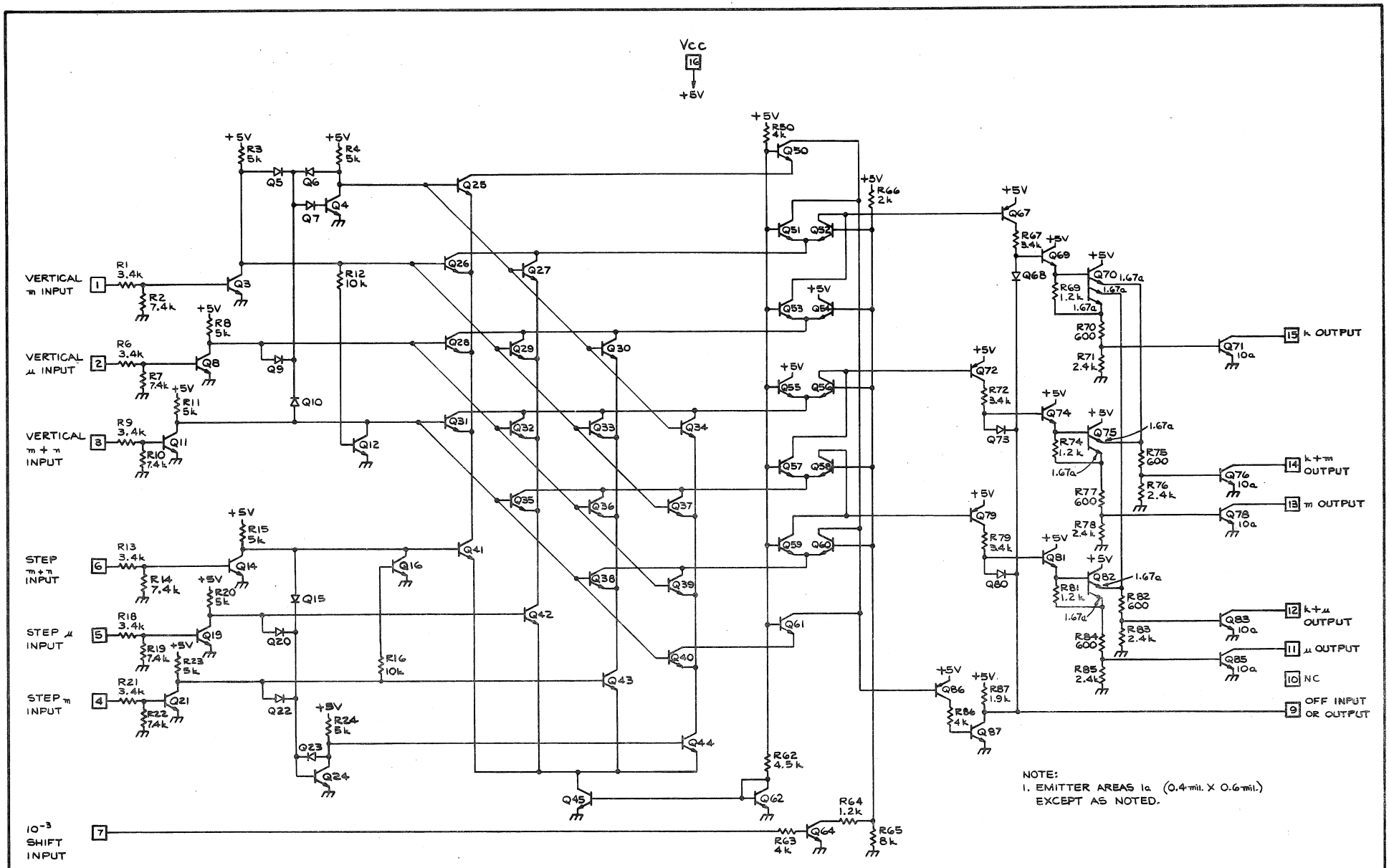

NOTE:
1. EMITTER AREAS 1a (0.4-mil. X 0.6-mil.) EXCEPT AS NOTED.

ENGR	M.H. Mulloy	6-10-76	PROCESS	200 Ω/□
DWN BY	S. POLENDEY	5-25-76	PACKAGE	16 PIN DIP
CHK BY	Linda Barger	7-15-76	DIE SIZE	55-mil. X 50-mil.
TYPE	MONOLITHIC	576 READOUT SYSTEM		M035B
INTEGRATED CIRCUIT ENG/MFG TEKTRONIX, INC. BEAVERTON, OREGON U.S.A.		PART NO. 155-0006-01		

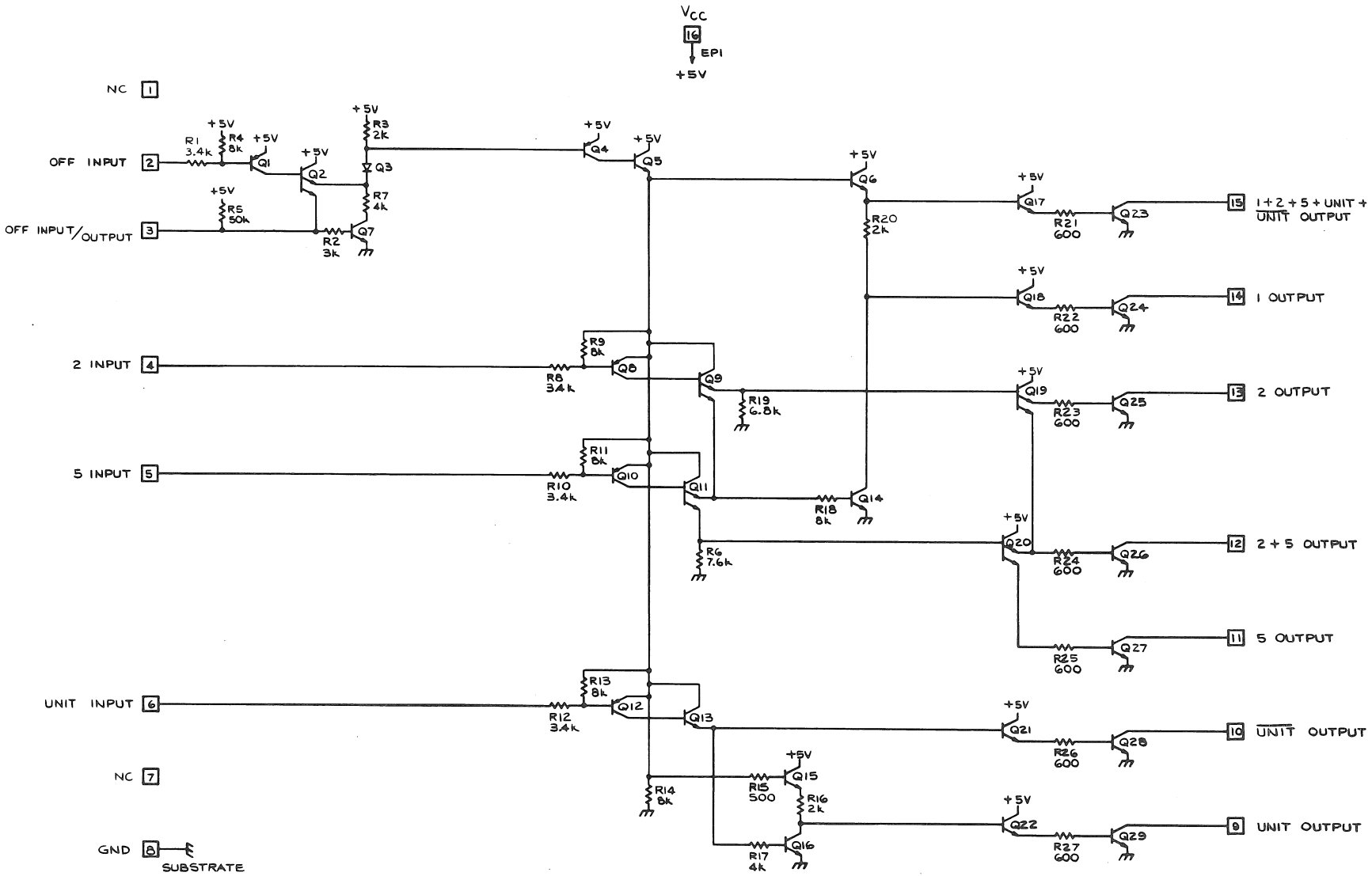

TEST ROW

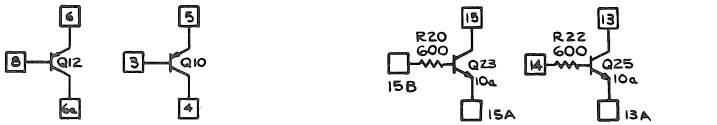

Q12 & Q10 0.6 X 0.6 mil. EMITTERS

Q23 & Q25 2 EA. 0.4X3.0 mil. EMITTERS

ENGR	M. H. Nielsen	6-10-76	PROCESS	200 Ω/□
DWN BY	S. POLENDEY	5-5-76	PACKAGE	16 PIN DIP
CHK BY	Linda Sorge	7-13-76	DIE SIZE	50 mil X 50 mil.
TYPE	MONOLITHIC	576 READOUT SYSTEM		M038C
INTEGRATED CIRCUIT ENG/MFG TEKTRONIX, INC. BEAVERTON, OREGON, U.S.A.		PART NO. 155-0007-00		

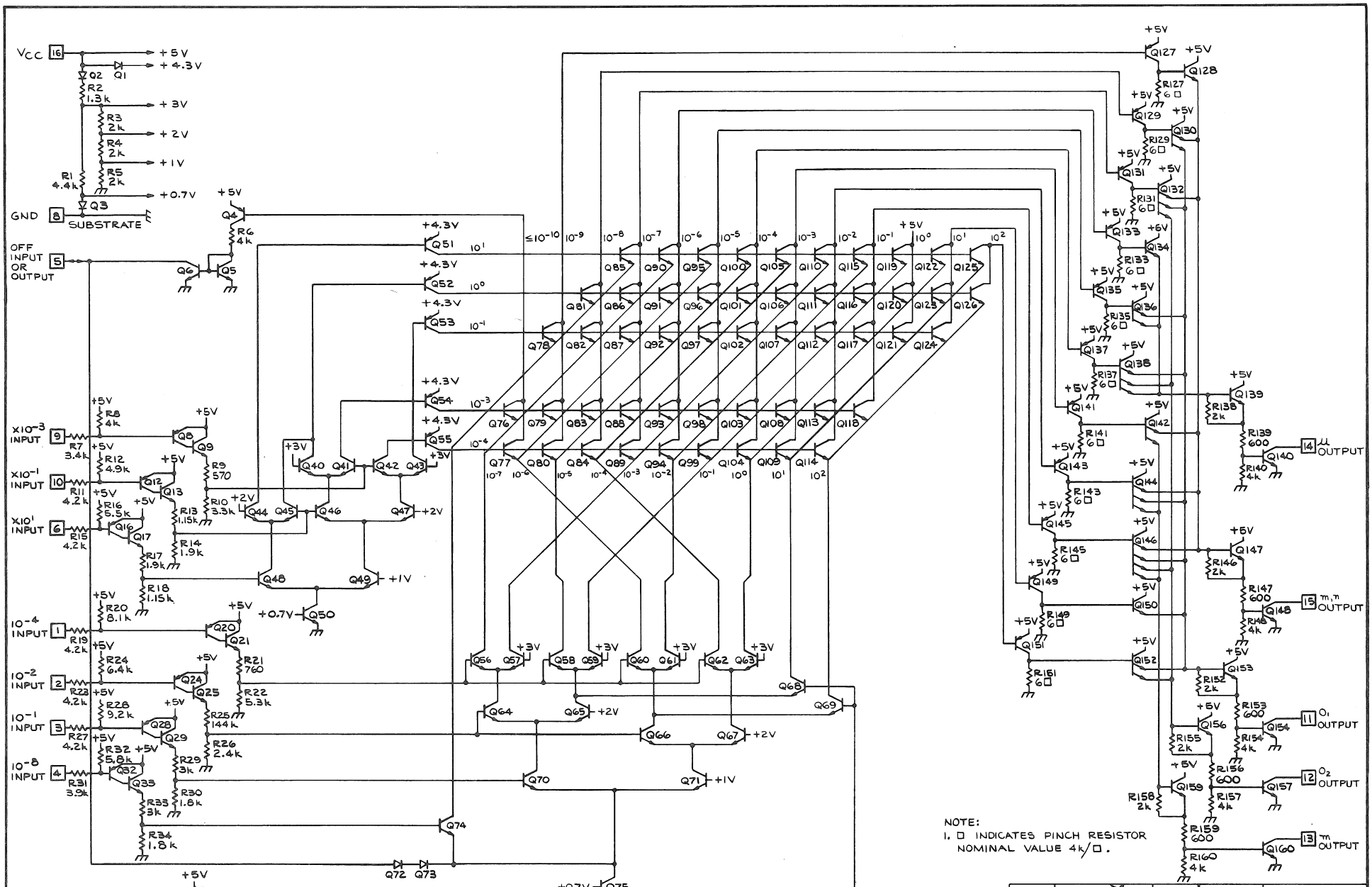

NOTE:
1. □ INDICATES PINCH RESISTOR NOMINAL VALUE 4k/□.

ENGR	M.H. Mehrl	6-10-76	PROCESS	200 Ω/□
DWN BY	S. POLENDEY	5-17-76	PACKAGE	16 PIN DIP
CHK BY	Linda Beyer	7-14-76	DIE SIZE	60-mil. X 60-mil.
TYPE	MONOLITHIC	576 READOUT SYSTEM		M039
INTEGRATED CIRCUIT ENG/MFG TEKTRONIX, INC. BEAVERTON, OREGON, U.S.A.		PART NO. 155-0008-01		

CHANNEL SWITCH

155-0022-00
155-0022-01

M036E

DESCRIPTION

This Integrated Circuit selects one or mixes two input analog signals in response to a digital input. In its simple application, it is double-pole, double-throw selector of one of two balance input signals. Its more sophisticated role is in providing signal steering in dual-trace vertical and horizontal amplifiers.

It is designed for two balanced input signals of 25 mV/division per side into 50 Ω per side (0.5 mA/division). The 50 Ω terminations to ground are external to the package. A current gain of "1" is intended. The gain setting resistors are external to the package. Total dynamic range is ± 15 divisions (± 7.5 mA).

The switch output is at or slightly above a +5 volt DC level. It is a current output into a resistance of 50 Ω per side. Side-to-side diodes are included inside the circuit for limiting the differential voltage swing of the output. The risetime of the switch is approximately 1 ns.

The CH1-CH2 input selects one or the other channel, and permits high speed switching between the two inputs for "CHOPPED" or "ALTERNATE" operation at frequencies up to 1 MHz or greater. The OFF input turns both inputs "off". The ADD input turns both inputs "on". The common mode current output of the signal channel is maintained and constant for the various modes.

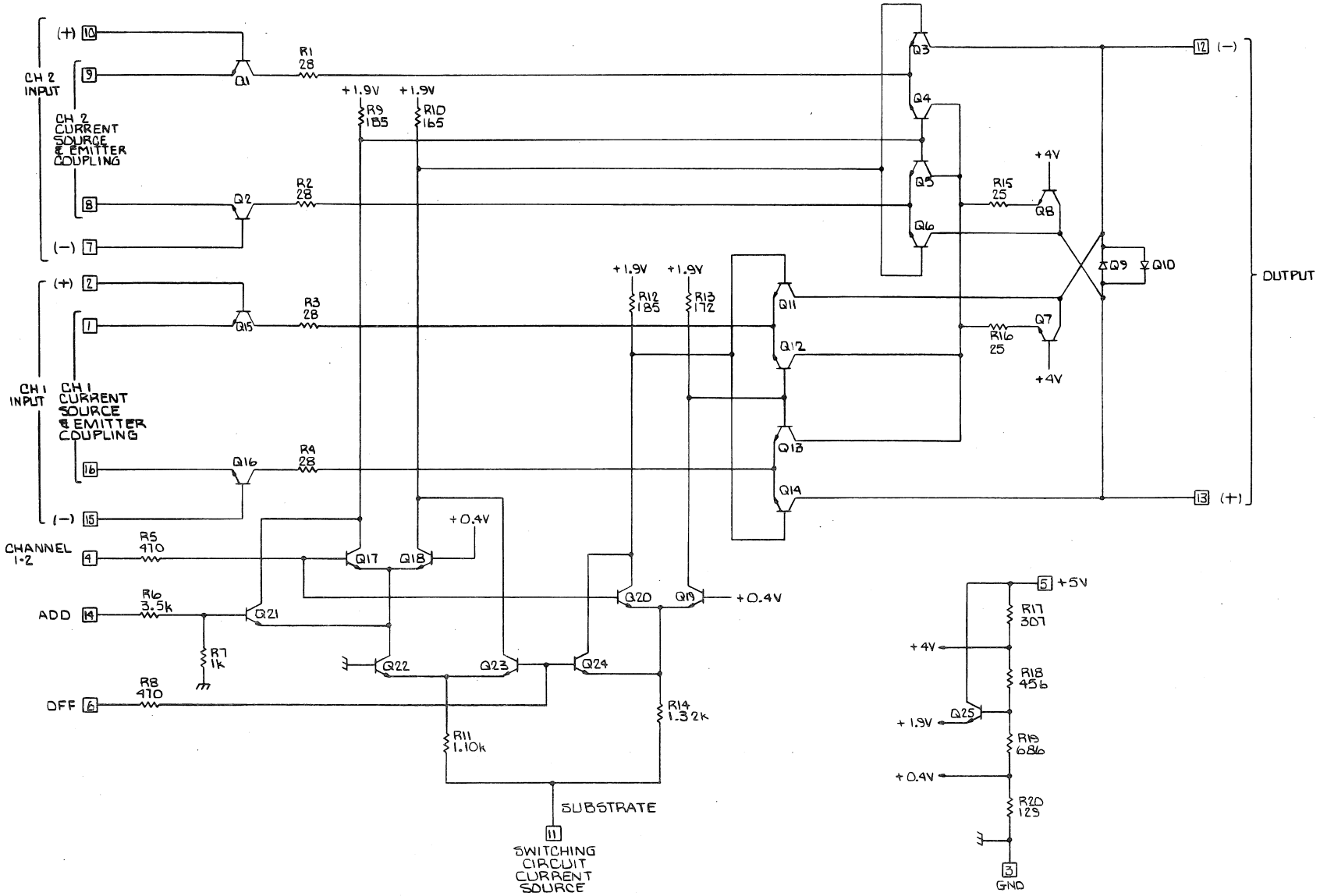

ENGR	Einar Troa	10-24-74	PROCESS	50/450 Ω/□
DWN BY	Pam Cherrie	10-23-74	PACKAGE	16 PIN DIP
CHK BY	Ackerton	11-7-74	DIE SIZE	40 mil × 50 mil
TYPE	MONOLITHIC	CHANNEL SWITCH		M036E
INTEGRATED CIRCUIT ENG/MFG TEKTRONIX, INC. BEAVERTON, OREGON, U.S.A.		PART NO. 155-0022-00		

CHARACTERISTICS

Low Frequency α.	0.94 Minimum
Output Impedance	>100 KΩ Nominal
Output Current Swing	± 7.5 mA Maximum
Input Capacitance Each Side	2.3 pF Nominal
Output Capacitance Each Side	5.2 pF Nominal
Switching Time	20 ns Maximum
Signal Risetime: $Rs = 100$ $R_e = 82$ $R_L < 50$. .	1.0 ns Maximum
Differential DC Offset Between Modes. . . .	20 mV Maximum
Gain Difference Between Modes: $A_I = 1$ Output Current Swing.	0.5% Maximum, < ± 2.5 mA
Low Frequency Opposite Channel Isolation . .	750:1 Minimum, F < 10 kc
100 MHz Opposite Channel Isolation	100:1 Nominal

Other characteristics are described in the listing of the terminals.

PROCESS 50/450

POWER SUPPLY. . . . . +5 Volts, Ground

PACKAGE . . . . . 16 DIP

DESIGNER . . . . . Gene Andrews

INSTRUMENT USAGE 7603K 7603H 7603G
7603N11S R7603 1430
147 148 7313
7603 7613 5A38
4503 335K 1461
1441 7704A 7912
5403 7903 7403
7D12 7844 5441
7D11 5440 7504
7514 R7704 P7001
7704A 5443 7A18
7623A 149 5443
7A18 7904 7633
A7704 7012

SWEEP CONTROL 155-0056-00 M042E

DESCRIPTION

This single package control system is intended for use in conjunction with the Miller Integrator and Delay Pickoff (M018). Logic inputs are RTL.

Functions

Trigger slope selection and pulse forming.
Sawtooth start/stop.
Holdoff and single-sweep lockout.
Bright baseline generation.

Triggering

Minimum Input (<10 MHz)	0.2 mA Peak-to-Peak
Maximum Usable Frequency	40 MHz
Triggering Delay	50 nS

The maximum usable frequency may be increased by connecting the ex-T.D trigger processing.

PROCESS	200 Ω/Sq
POWER SUPPLY	V_{CC} +5 Volts
PACKAGE	16 DIP
DESIGNER	Val Garuts
INSTRUMENT USAGE	26G1, 26G2, 26G3, 314K, 4701, 5B10N, 5B12N, 5S14N, 7L5, 7L12, 7L13, 7S14, RG501

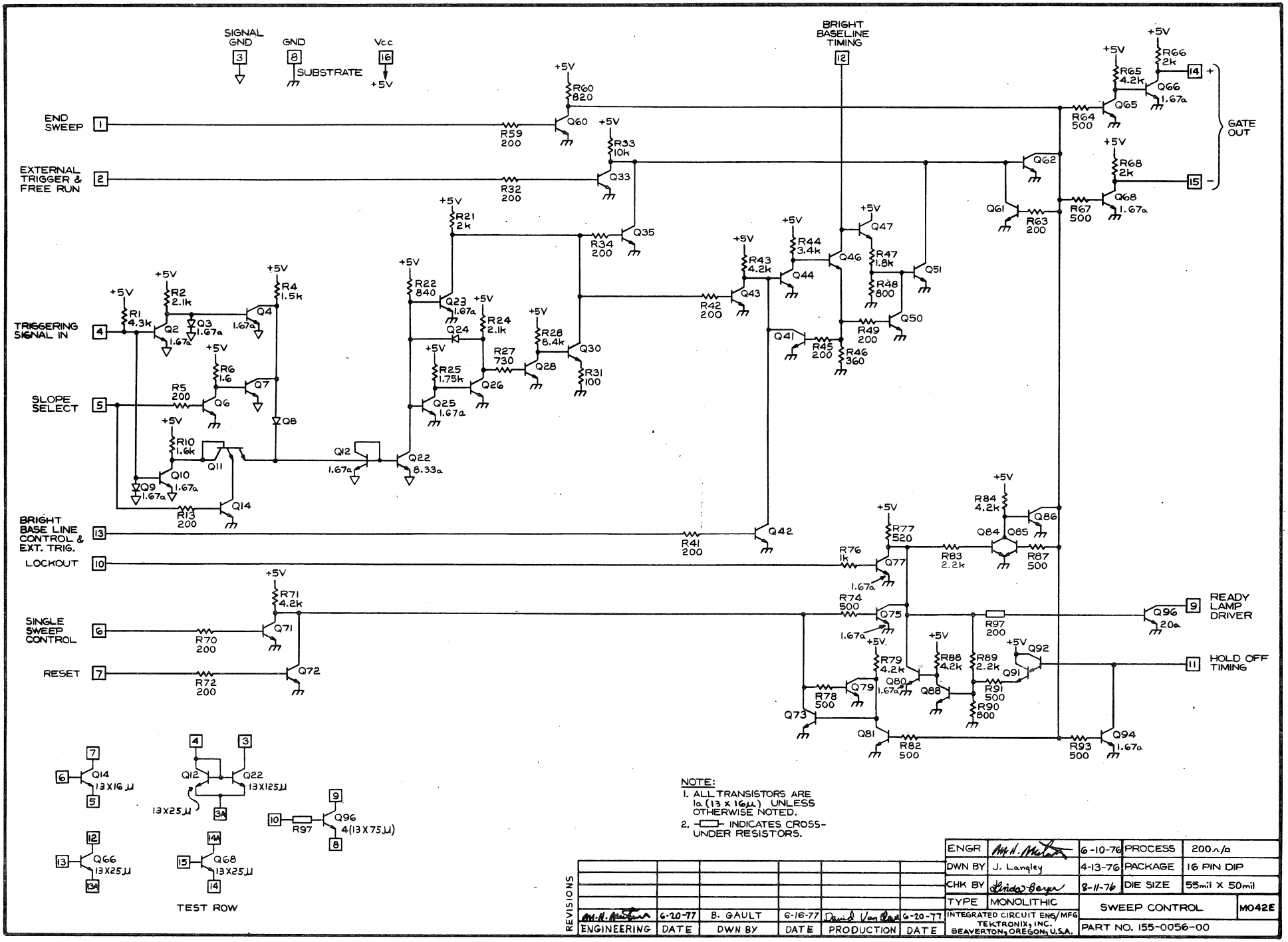
SIGNAL GND
GND
SUBSTRATE
Vcc
+5V
BRIGHT BASELINE TIMING
END SWEEP
EXTERNAL TRIGGER & FREE RUN
TRIGGERING SIGNAL IN
SLOPE SELECT
BRIGHT BASE LINE CONTROL & EXT. TRIG.
LOCKOUT
SINGLE SWEEP CONTROL
RESET
GATE OUT
READY LAMP DRIVER
HOLD OFF TIMING
TEST ROW
NOTE:
1. ALL TRANSISTORS ARE 1a (13 X 16μ) UNLESS OTHERWISE NOTED.
2. INDICATES CROSS-UNDER RESISTORS.
ENGR 6-10-76 PROCESS 200Λ/a
DWN BY J. Langley 4-13-76 PACKAGE 16 PIN DIP
CHK BY 8-11-76 DIE SIZE 55mil X 50mil
TYPE MONOLITHIC
SWEEP CONTROL M042E
INTEGRATED CIRCUIT ENG/MFG TEKTRONIX, INC. BEAVERTON, OREGON, U.S.A.
PART NO. 155-0056-00
REVISIONS
ENGINEERING DATE DWN BY DATE PRODUCTION DATE
6-20-77 B. GAULT 6-16-77 6-20-77

D/A CONVERTER

155-0038-01
155-0038-02 M45D

DESCRIPTION

The M045 is a 5-bit precision current source digital to analog converter. The current ratios are set by external resistors. The range of the MSB is 5 mA to 30 mA. Two packages may be used together for a 10-bit D/A with ± 1/2 LSB accuracy.

The output is designed to sum into Ø volts. The logic inputs are T^2L level compatible with a low state being true.

PROCESS	200 Ω/Sq
POWER SUPPLY.	V_{CC} +5V, V_{EE} -5V to -15V
PACKAGE	16 Pin DIP
DESIGNER	Mike Metcalf
INSTRUMENT USAGE	7D13 P7001950C 7D14 P7701953Q 7M13 P7001 7S12 1461 S6

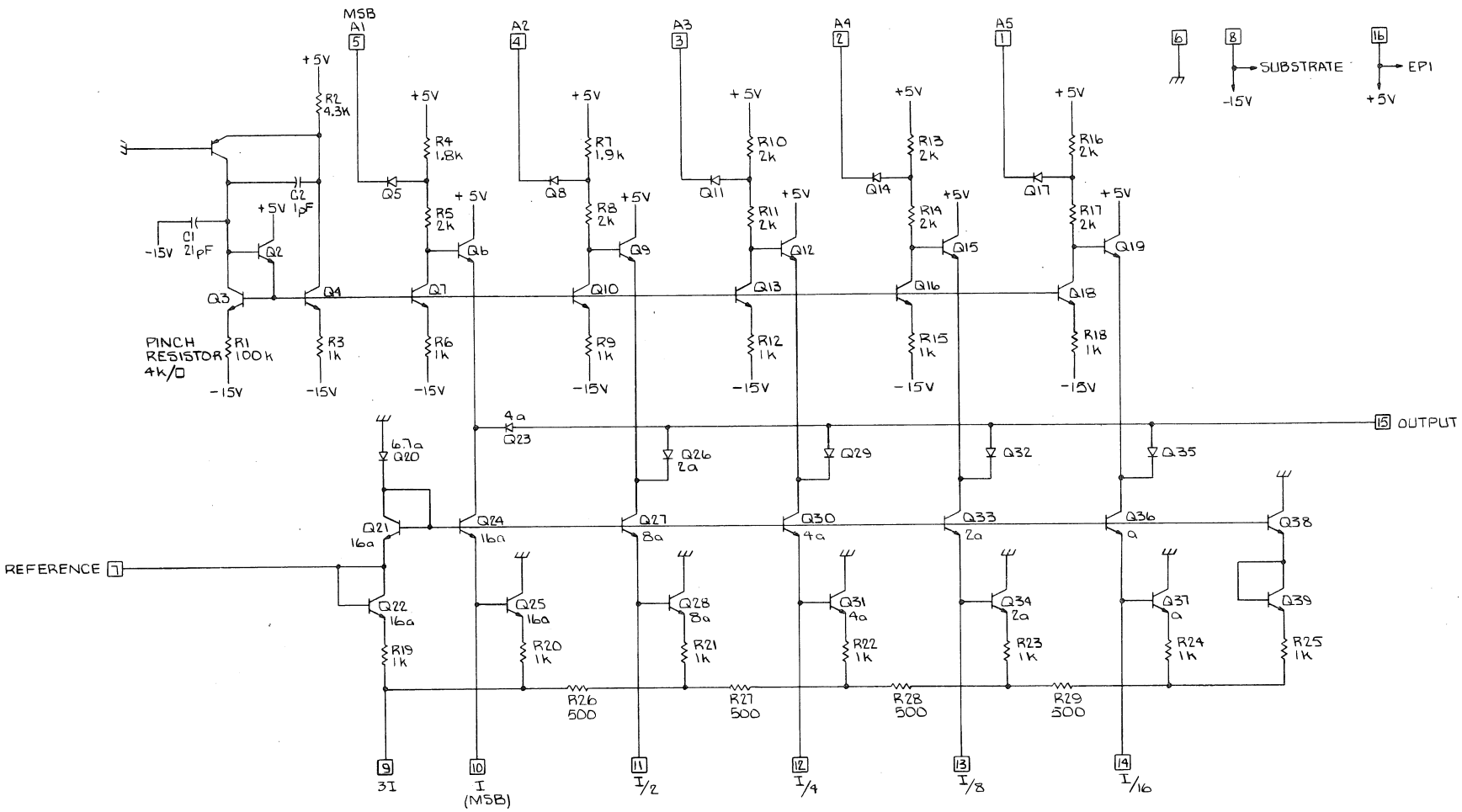

ENGR	M H McCrady	11-13-74	PROCESS	200Ω/□
DWN BY	Pam Cherrie	11-1-74	PACKAGE	16 PIN DIP
CHK BY	Jim McCrady	11-25-74	DIE SIZE	50 mil × 50 mil
TYPE	MONOLITHIC	D-A CONVERTER		MO45D
INTEGRATED CIRCUIT ENG/MFG TEKTRONIX, INC. BEAVERTON, OREGON, U.S.A.		PART NO. 155-0038-01/02		

QUAD TIMING UNIT 155-0031-01 M047

DESCRIPTION

This Integrated Circuit generates four separate and independent timing intervals. The input is RTL, with current limiting required. During the timing interval, the output is at 5 volts through 5 KΩ. During the off period, the output will sink 5 mA below 0.4 volts.

The resistor should supply no more than 750 μA. Allow 5 μA for the operation of the circuit. For narrow input pulses (less than 0.5 ms per μF of capacitance), the timing ramp will occur from 1 volt to 3.6 volts. Wider input pulses will change the ramp to Ø volts to 3.6 volts.

The circuit is a pulse stretcher in operation. The output will remain positive for a time set by the width of the input pulse plus a timing interval set by an RC.

PROCESS . . . . . 200 Ω/Sq

POWER SUPPLY. . . . . V_{CC} +5 Volts

PACKAGE . . . . . 16 DIP

DESIGNER . . . . . Mike Nash

INSTRUMENT USAGE . . . . . None

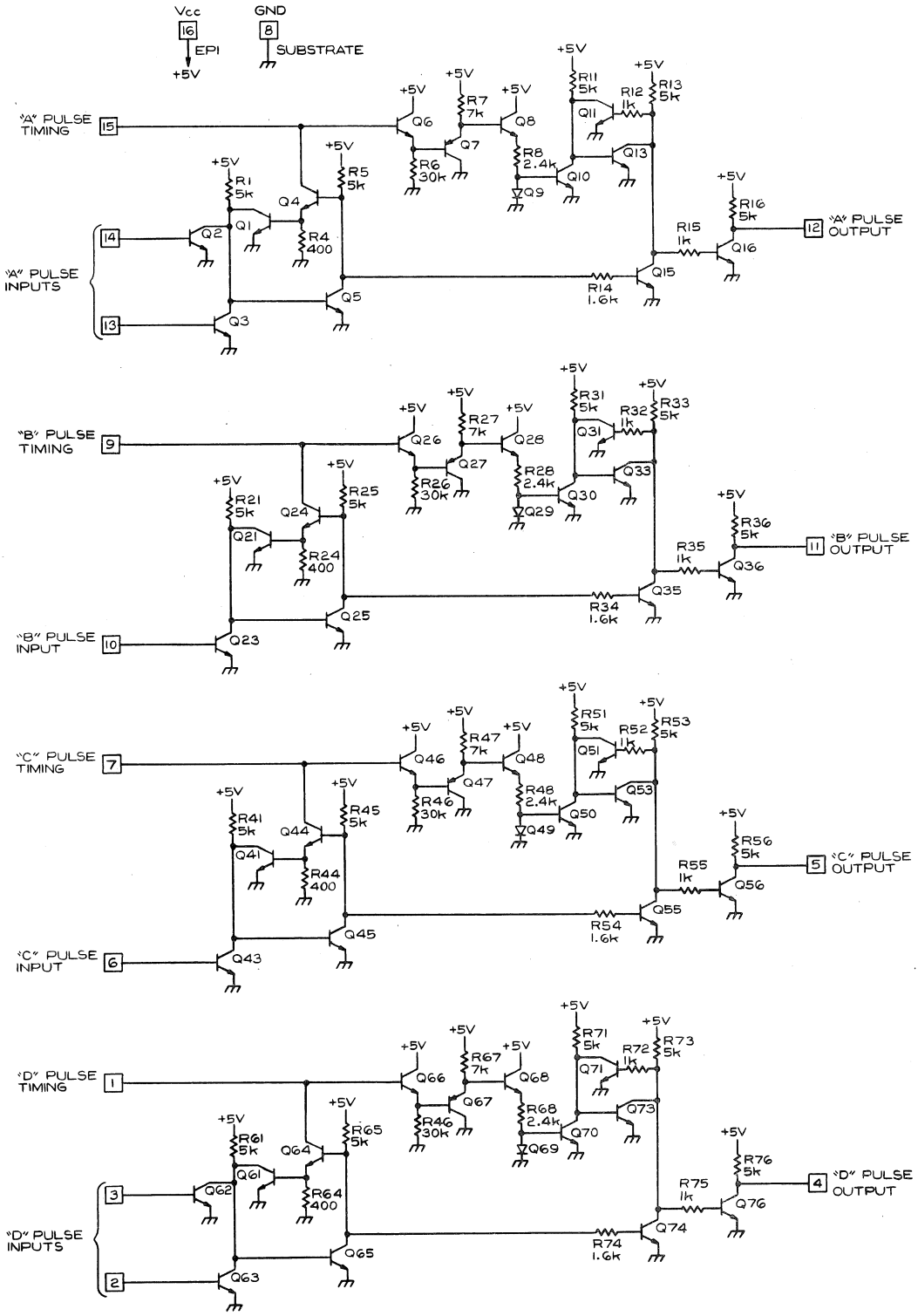

ENGR	M. H. Mutard	12-10-76	PROCESS	200 ~/□
DWN BY	J. Langley	4-19-76	PACKAGE	16 PIN DIP
CHK BY	David VanCleve	3-22-77	DIE SIZE	50 mil X 50 mil
TYPE	MONOLITHIC	QUAD TIMING UNIT		M047
INTEGRATED CIRCUIT ENG/MFG TEKTRONIX, INC. BEAVERTON, OREGON, U.S.A.		PART NO. 155-0031-01		

PROBE POWER SUPPLY 155-0033-00 M48

DESCRIPTION

This circuit provides +7 volts and -10 volts from ± 12 volts to ± 15 volts input voltages with an output impedance of less than 10 Ω and temperature coefficient of less than two millivolts per centigrade. The supplies can deliver upwards from 100 mW, depending on heatsinking and ambient temperature requirements.

The circuit also provides constant current sources of:

+2 mA at V_6 < +10 Volts and -2 mA at V_4 < -10 Volts

PROCESS . . . . . 200 Ω/Sq

POWER SUPPLY. . . . . V_{CC} +15V, V_{EE} -15V

PACKAGE TO-5

DESIGNER . . . . . Glenn Bateman

INSTRUMENT USAGE 010-0227-00

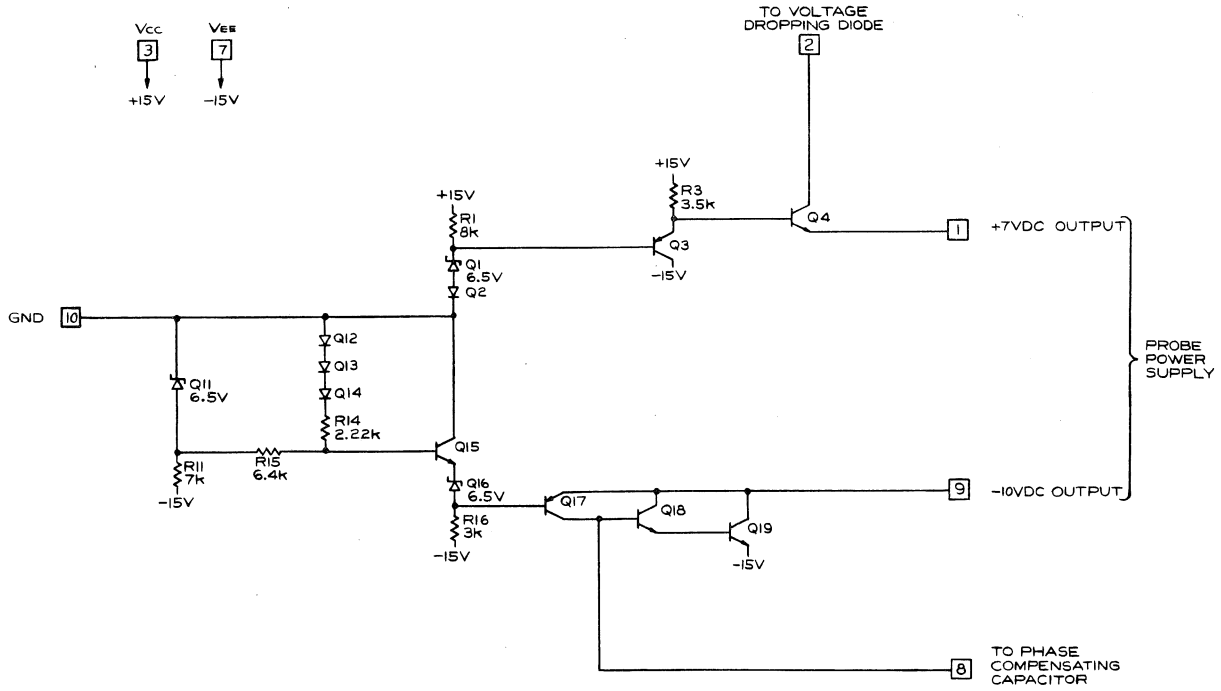

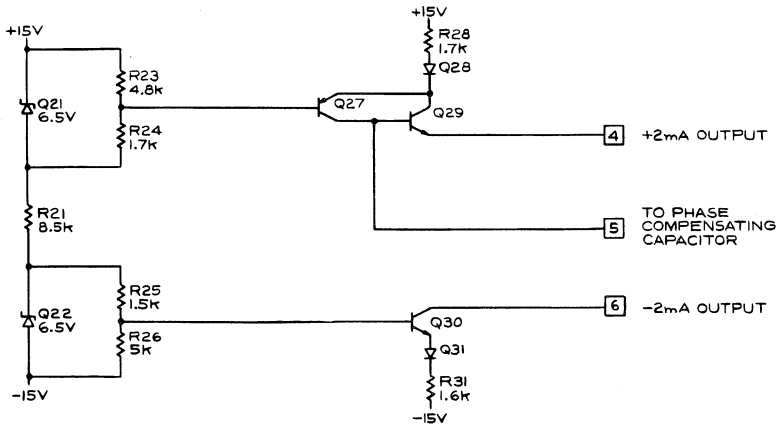

ENGR	E Trae	2-24-75	PROCESS	200 n/a
DWN BY	J. Langley	2-11-75	PACKAGE	10 LEAD TO-5
CHK BY	David VanOlen	10-23-75	DIE SIZE	35 mil X 50 mil
TYPE	MONOLITHIC	PROBE POWER SUPPLY		M048
INTEGRATED CIRCUIT ENG/MFG TEKTRONIX, INC. BEAVERTON, OREGON, U.S.A.		PART NO. 155-0033-00		

DUAL OUTPUT AMPLIFIER 155-0047-00 P050B

DESCRIPTION

Two variable gain amplifiers on a single chip. The input is a single-ended voltage and the output a differential current. Intended to be used as mini-scope output amplifiers.

Characteristics

Gain (Current Output	Adjustable From 0.5 to 5 mA/Volt
Bandwidth.	Determined by Load and Source Impedances
Input Impedance.	20 KΩ

PROCESS . . . . . 200 Ω/Sq

POWER SUPPLY. . . . . V_{CC} +6 Volts, V_{EE} -6 Volts

PACKAGE . . . . . 16 DIP

DESIGNER . . . . . David Allen

INTRUMENT USAGE. 211
212
214

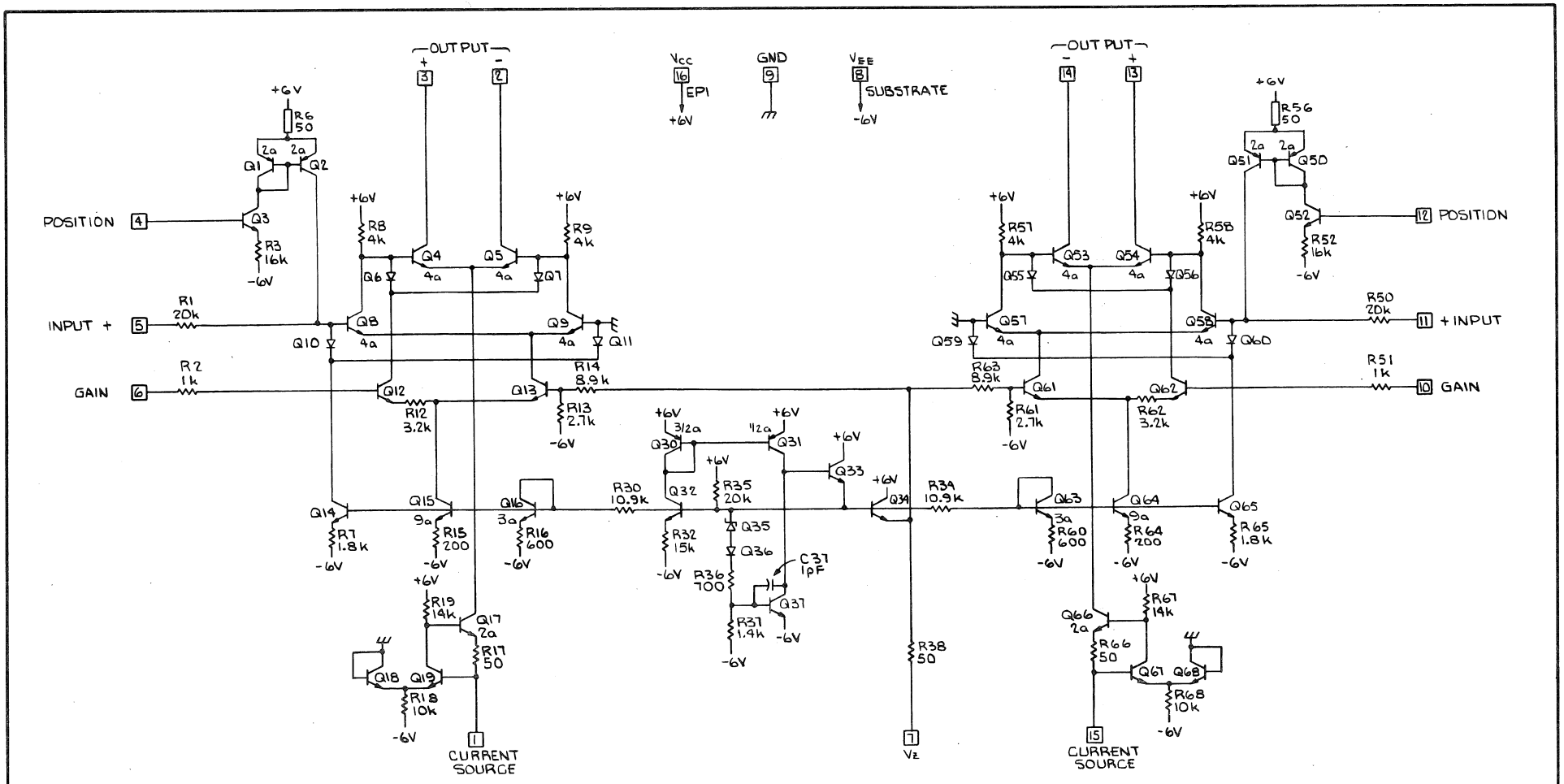

NOTES
1. ▭ INDICATES CROSS UNDER.

TEST METAL

ENGR	M. H. Anderson	12-16-75	PROCESS	200Λ/a
DWN BY	PAM CHERRIE	12-12-75	PACKAGE	16 PIN MINIPAC
CHK BY	David Van Clave	3-25-76	DIE SIZE	52 mil X 52 mil
TYPE	MONOLITHIC	DUAL OUTPUT AMPLIFIER		M050C
INTEGRATED CIRCUIT ENG/MFG TEKTRONIX, INC. BEAVERTON, OREGON, U.S.A.		PART NO. 155-0047-00		

TRIGGER AND SWEEP

155-0048-01 M052F
155-0055-00

DESCRIPTION

This Integrated Circuit includes all functions for Trigger and Sweep.

Trigger

Input	FET Input: 50 mV to 1 Volt Peak-to-Peak
Level	Single Control for Level and +Slope or -Slope
Frequency	DC to 5 MHz.

Sweep

Ramp Output	-Slope From +2 Volts to -2 Volts, External Adjustment ± 0.5 Volts
Maximum dV/dT.	1 V/μSec
Timing Resistor Voltage .	+2.5 Volts ± 0.5 Volts
Holdoff.	External "C", Internal 0.25 mA Timing "I"
Automatic Free-Run . . .	External RC
Unblank Output	+2 Volts During Sweep

PROCESS. . . . . P- 200 Ω/Sq

POWER SUPPLY . . . . . ± 5 Volts to ± 10 Volts at 8 mA

PACKAGE. . . . . 155-0048-01 (16 Minipac), 155-0055-00 (16 DIP)

DESIGNER . . . . . Dave Allen

INSTRUMENT USAGE. . . . .

211	5B12N	603950H
212	5B13N	604950H
213	5B13NH	605950H
214	5L4N	5C501

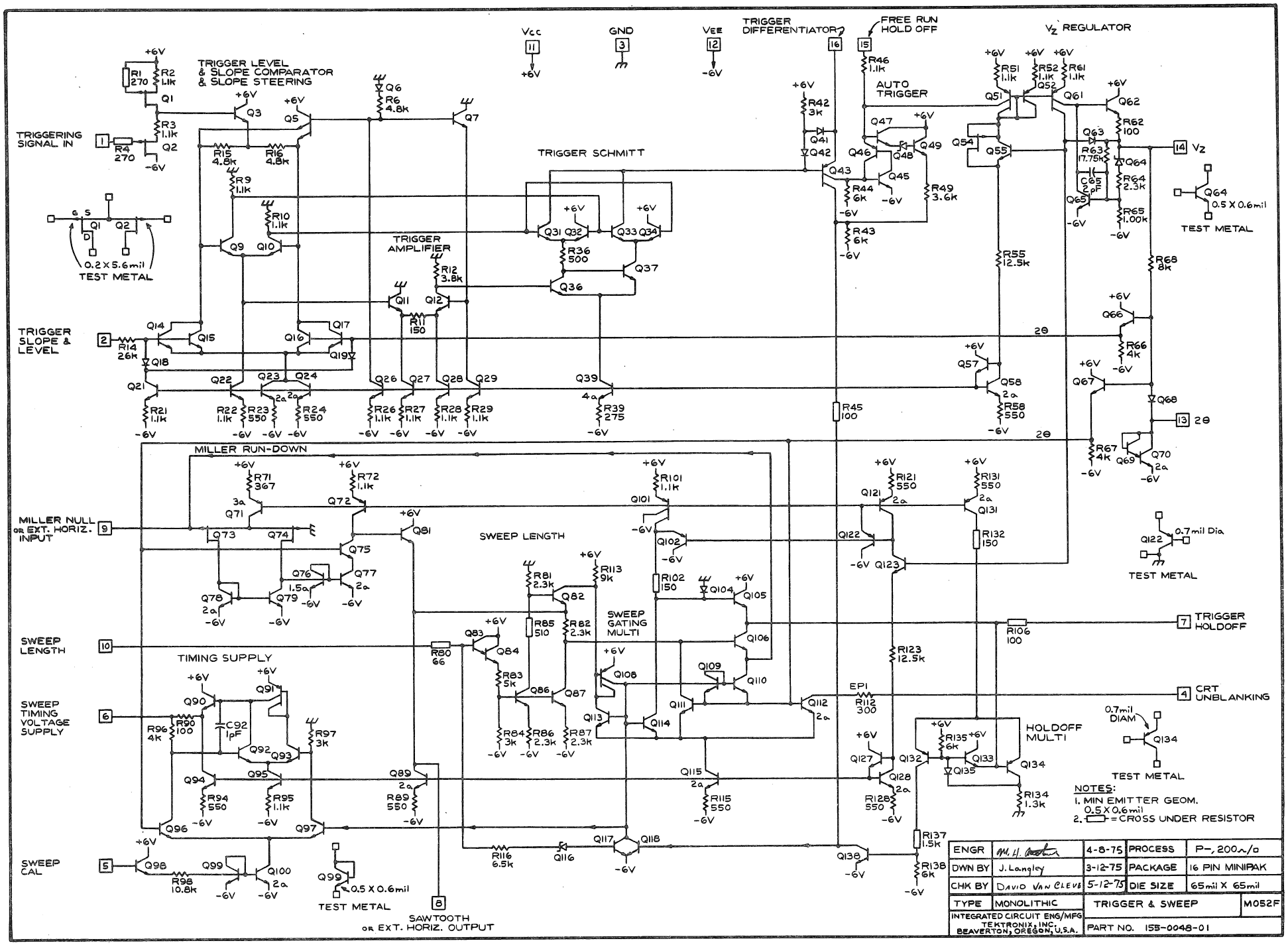
TRIGGERING SIGNAL IN
TRIGGER LEVEL & SLOPE COMPARATOR & SLOPE STEERING
TRIGGER SLOPE & LEVEL
TRIGGER AMPLIFIER
TRIGGER SCHMITT
TRIGGER DIFFERENTIATOR
FREE RUN HOLD OFF
AUTO TRIGGER
Vz REGULATOR
MILLER RUN-DOWN
MILLER NULL OR EXT. HORIZ. INPUT
SWEEP LENGTH
SWEEP GATING MULTI
TIMING SUPPLY
SWEEP TIMING VOLTAGE SUPPLY
SWEEP CAL
SAWTOOTH OR EXT. HORIZ. OUTPUT
HOLDOFF MULTI
TRIGGER HOLDOFF
CRT UNBLANKING
TEST METAL
0.2 X 5.6 mil
0.5 X 0.6 mil
0.7 mil Dia
0.7 mil DIAM
NOTES:
1. MIN EMITTER GEOM. 0.5 X 0.6 mil
2. = CROSS UNDER RESISTOR
ENGR
DWN BY J. Langley
CHK BY DAVID VAN CLEVE
TYPE MONOLITHIC
PROCESS P-, 200Ω/□
PACKAGE 16 PIN MINIPAK
DIE SIZE 65 mil X 65 mil
TRIGGER & SWEEP
M052F
INTEGRATED CIRCUIT ENG/MFG TEKTRONIX, INC. BEAVERTON, OREGON, U.S.A.
PART NO. 155-0048-01

QUAD OPERATIONAL AMPLIFIER

155-0035-00
155-0116-00

M053B

DESCRIPTION

Four operational amplifiers on a chip with the following specifications:

Maximum Power Dissipation	500 mW at 25°C Derate 5 mW/°C to 125°C
Power Supplies	± 5 to ± 15 V
Open Loop Gain	$\geq$ 1500
Gain Bandwidth	$\geq$ 80 MHz
Input Offset	$\leq$ 5 mV
Output Swing	- 0.7 w.r.t. Input Level To $+V_{CC}$ -1.5V
Maximum Output Current	20 mA (Limited By Package Dissipation)

The amplifier is stable in all modes without external compensation if $C_L \leq 10$ pF.

PROCESS . . . . . 200 Ω/Sq

POWER SUPPLY. . . . . .

PACKAGE . . . . . 155-0035-00 (16 DIP Plastic)
155-0116-00 (16 DIP Ceramic)

DESIGNER . . . . . Mike Metcalf

INSTRUMENT USAGE . . . . .

3110	7L5	4010
7L12	4011	7L13
4012	7S12	4013
7T11	4602	S6
613	P7001	653
1461		

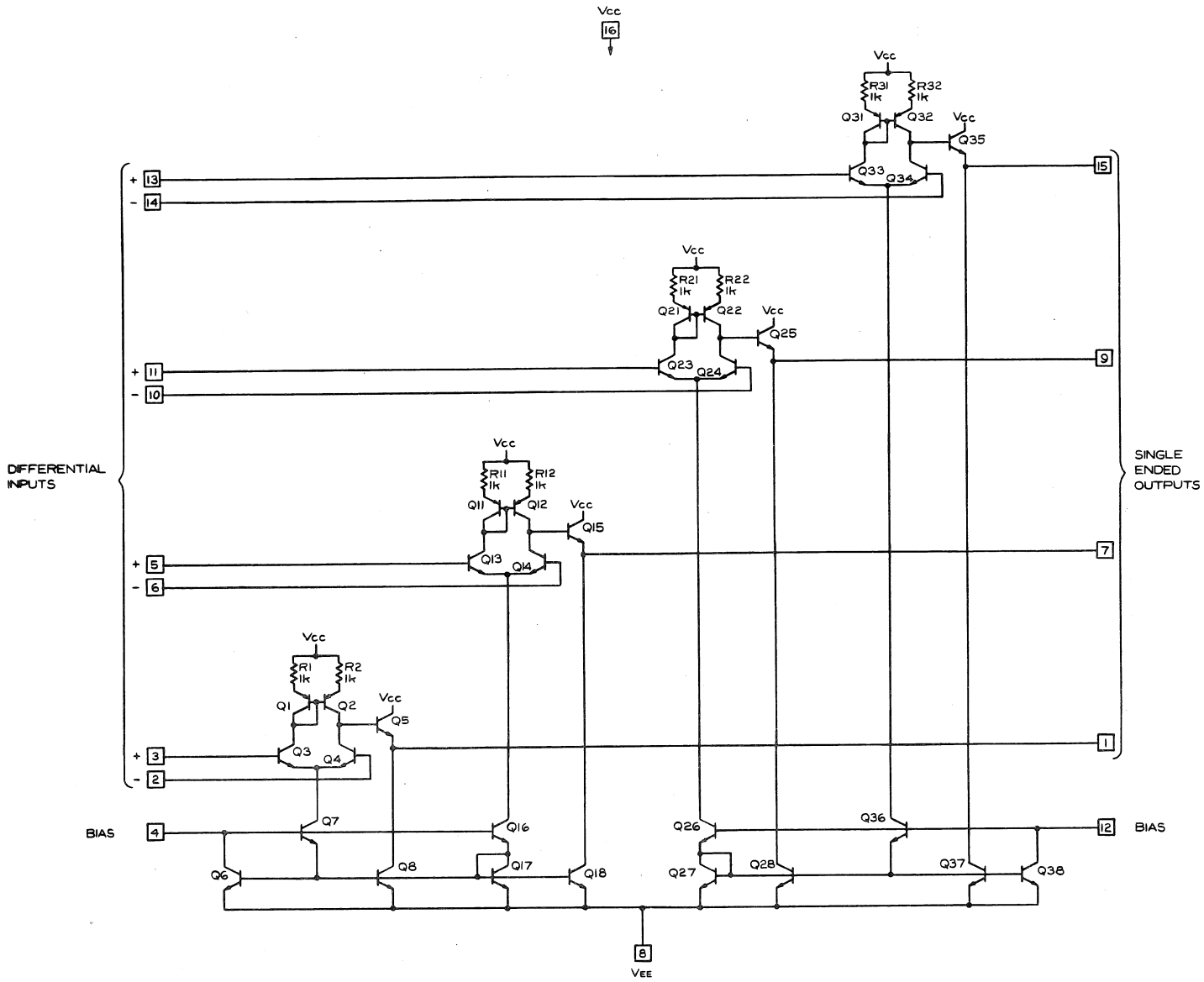

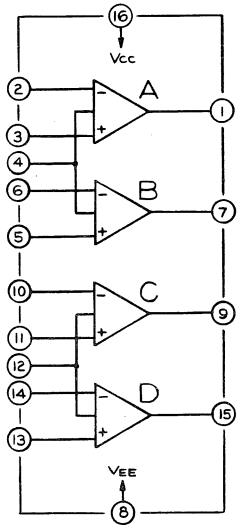

LOGIC DIAGRAM

ENGR	M. H. Arthur	6-30-75	PROCESS	200 A/a
DWN BY	J. Langley	6-18-75	PACKAGE	16 PIN DIP
CHK BY	C. WESTON	10-9-75	DIE SIZE	40mil X 40mil
TYPE	MONOLITHIC	QUAD OPERATIONAL AMPLIFIER		M053B
INTEGRATED CIRCUIT ENG/MFG TEKTRONIX, INC. BEAVERTON, OREGON, U.S.A.		PART NO. 155-0035-00/155-0116-00		

TWO OP-AMPS/TWO CURRENT SOURCES 155-0057-00 M053B

DESCRIPTION

This is a variation of the Quad-Op-Amp chip (155-0035-00/155-0116-00) connection is such a fashion that Amplifiers "A" and "B" are operative as amplifiers, while "C" and "D" pin-outs are arranged in such a fashion as to become a constant current source rather than operating as amplifiers. The magnitude of constant current available is approximately four times the bias current as measured at Pin 11 when the output is taken from Pins 8, 9, 10, 12, 13, and 14 all connected together.

PROCESS	200 Ω/Sq
POWER SUPPLY.	V_{CC}: +5 to +15 V_{EE}: -5 to -15
PACKAGE	Minipac
DESIGNER	Dave Allen
INSTRUMENT USAGE	211

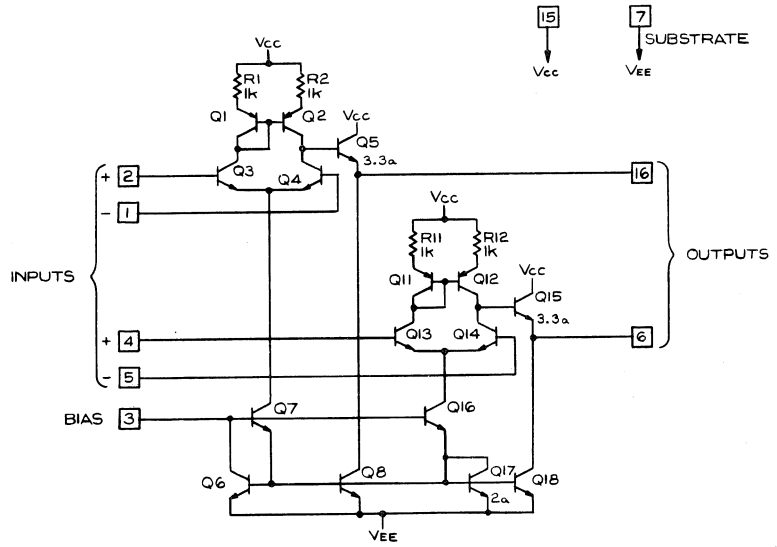

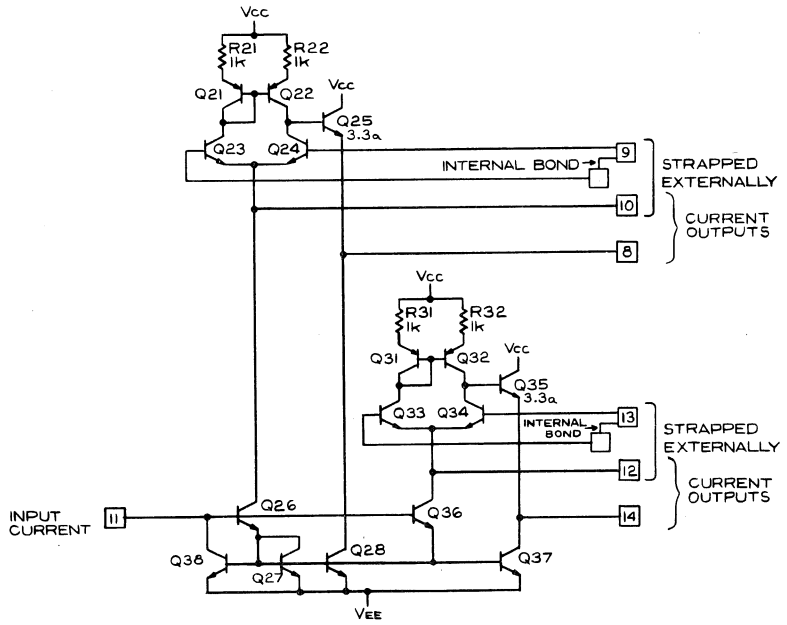

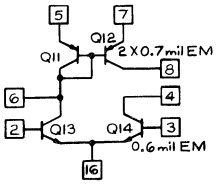

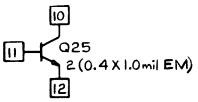

TEST ROW

ENGR	M. H. Nutter	6-10-76	PROCESS	200Ω/□
DWN BY	J. Langley	4-5-76	PACKAGE	16 PIN MINIPAC
CHK BY	Linda Boyer	7-13-76	DIE SIZE	40mil X 40mil
TYPE	MONOLITHIC	2 OP AMPS/ 2 CURRENT SOURCES		M053B
INTEGRATED CIRCUIT ENG/MFG TEKTRONIX, INC. BEAVERTON, OREGON, U.S.A.		PART NO. 155-0057-00		

INPUT AMPLIFIER

155-0032-00
155-0032-01

M55D

DESCRIPTION

This circuit is a single channel amplifier designed for the dual channel 7A12. Pins #1, #2, #15, and #16 are connected to external current sources to provide gain changes. The differential input is connected to Pins #3 and #14. Current at Pin #10 controls the ratio of the current from Pin #6 to Pins #8 and #9 for output position. Current at Pin #12 controls Pin #5 currents to provide current gain continously variable between +1 and -1.

PROCESS 50/450

POWER SUPPLY. . . . . +15V, +9V, GND -15V

PACKAGE . . . . . 16 Pin DIP

DESIGNER . . . . . Roy Hayes

INSTRUMENT USAGE 1478 671
465 1460
475 670
464 466
1440 355

Some 475 Mods

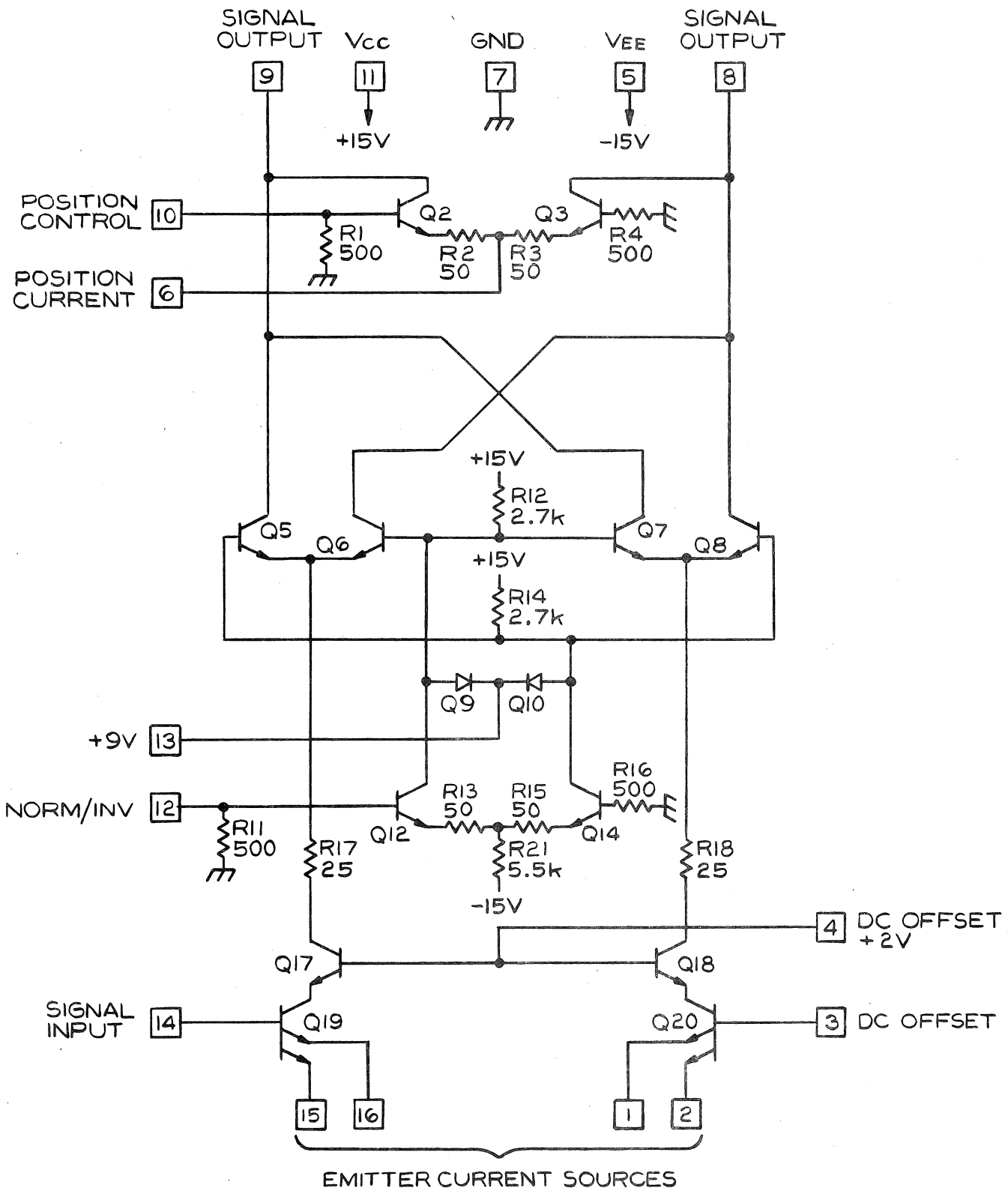

ENGR	Evan Tice	7-1-76	PROCESS	50-450
DWN BY	J. Langley	6-29-76	PACKAGE	16 PIN DIP
CHK BY	Linda Boyer	7-13-76	DIE SIZE	60mil X 40mil
TYPE	MONOLITHIC	INPUT AMPLIFIER		M055
INTEGRATED CIRCUIT ENG/MFG TEKTRONIX, INC. BEAVERTON, OREGON, U.S.A.		PART NO. 155-0032-00		

DUAL DIODE 155-0034-00 M061

DESCRIPTION

Diode Pair - matched for V_{BE} and specific thermal tracking with temperature.

NOTE: Foot of "T" stamped on side of case is the cathode.

PROCESS . . . . . 200 Ω/Sq

POWER SUPPLY. . . . . .

PACKAGE . . . . . Micro T

DESIGNER . . . . . Carlos Medina

INSTRUMENT USAGE 010-0227-00

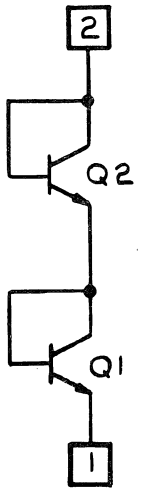

ENGR	C. MADINA	9-25-75	PROCESS	200 Ω/□
DWN BY	J. Langley	2-12-75	PACKAGE	MICRO T
CHK BY	David Van Cleve	10-23-75	DIE SIZE	60 mil X 50 mil
TYPE	MONOLITHIC	DUAL DIODE		M061
INTEGRATED CIRCUIT ENG/MFG TEKTRONIX, INC. BEAVERTON, OREGON, U.S.A.		PART NO. 155-0034-00		

VERTICAL PREAMPLIFIER 155-0050-01 M065

DESCRIPTION

The M065 is a Vertical Preamplifier for the 432 and 434 Portable scopes. This circuit has provisions for gain-switching and gain adjustment. In addition, basic sensitivity is set by an external resistor.

PROCESS	200 Ω/Sq
POWER SUPPLY.	+15V, GND, -10V
PACKAGE	20 Pin DIP
DESIGNER	Bert TenKate
INSTRUMENT USAGE	314K 432 434

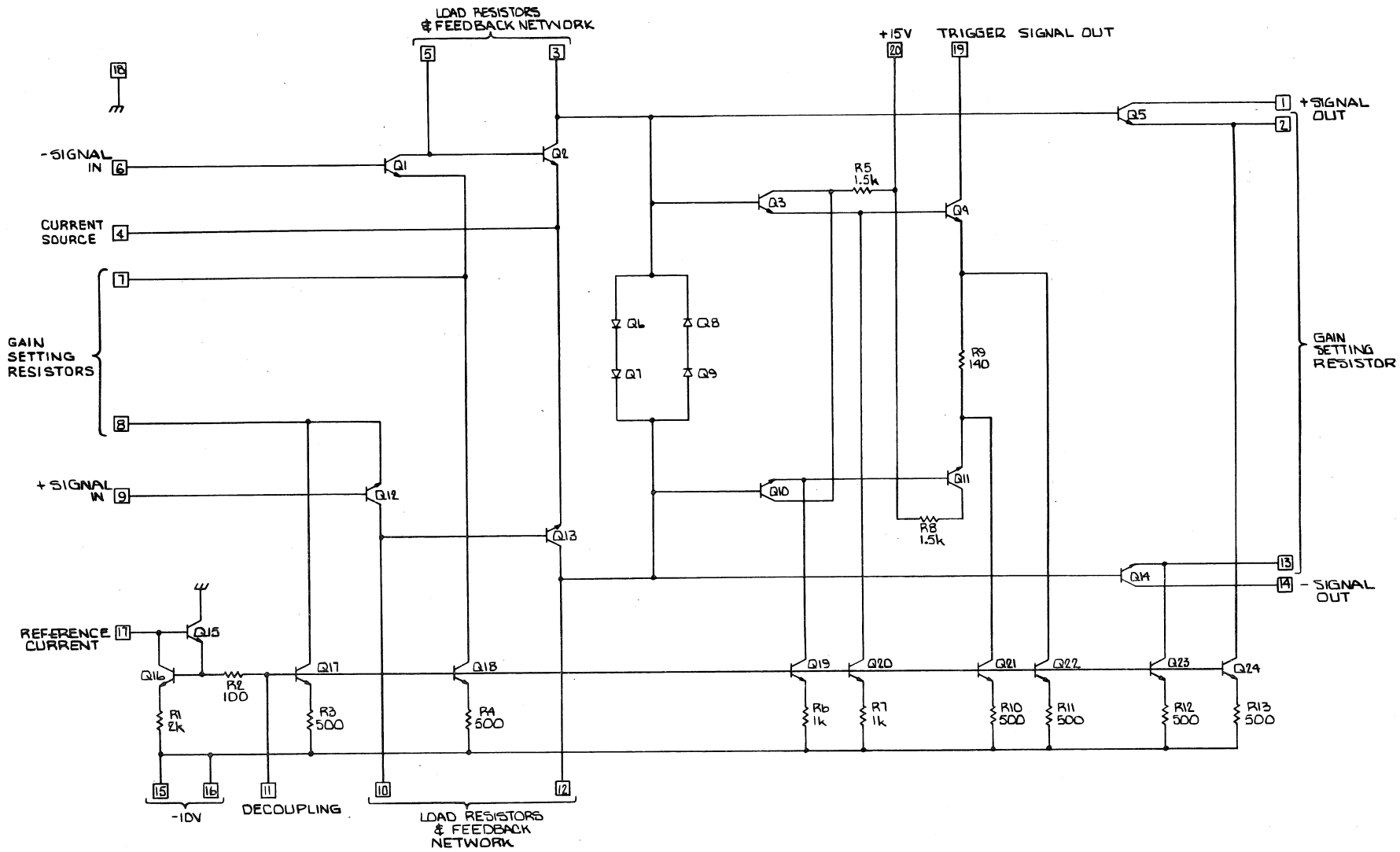

ENGR	Eher Tice	9-30-75	PROCESS	200 n/a
DWN BY	PAM CHERRIE	11-12-74	PACKAGE	20 PIN DIP
CHK BY	David VanCleve	2-10-76	DIE SIZE	45mil X 35mil
TYPE	MONOLITHIC	VERTICAL PREAMP		M065
INTERGRATED CIRCUIT ENG/MFG TEKTRONIX, INC. BEAVERTON, OREGON, U.S.A.		PART NO. 155-0050-01		

DESCRIPTION

This integrated circuit comprises two separate circuits, a HV Regulator Amplifer and the Z-Axis Amplifier.

The HV Regulator is a high gain non-inverting amplifier using a triple Darlington input for low bias current. A reference supply, also using a triple Darlington, establishes a differential input voltage.

The Z-Axis Amplifier is used in a feed-back mode with external circuitry. The current into the summing node is determined by three current inputs at -5 volts. This current is switched through hot carrier diodes by the unblanking current input.

PROCESS	200 Ω-cm With Schottky
POWER SUPPLY.	V_{CC} +15V, V_{EE} -15V
PACKAGE	20 DIP
DESIGNER	Frank Churchill
INSTRUMENT USAGE	432 434

HV REG

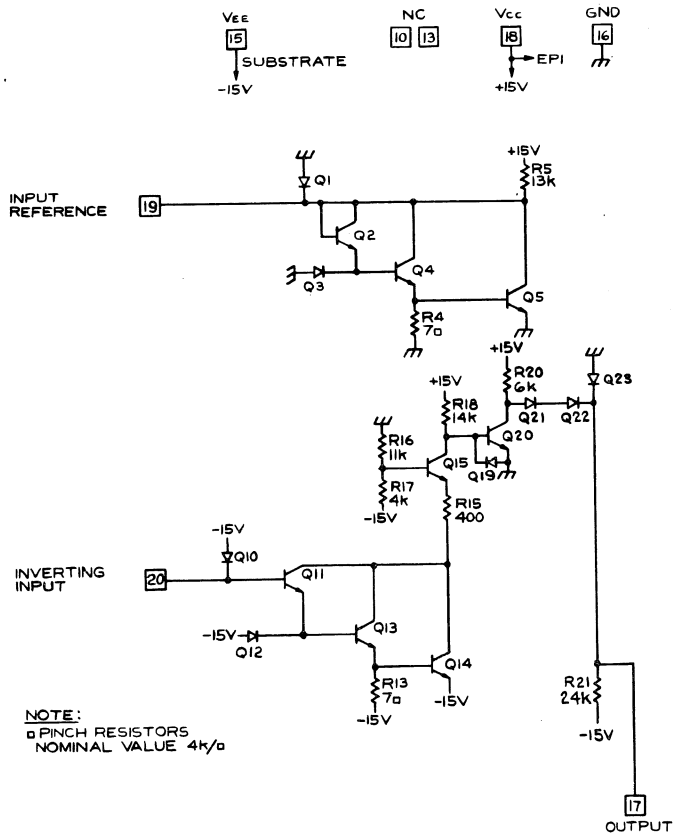

NOTE:
▫ PINCH RESISTORS
NOMINAL VALUE 4k/▫

Z AXIS AMP

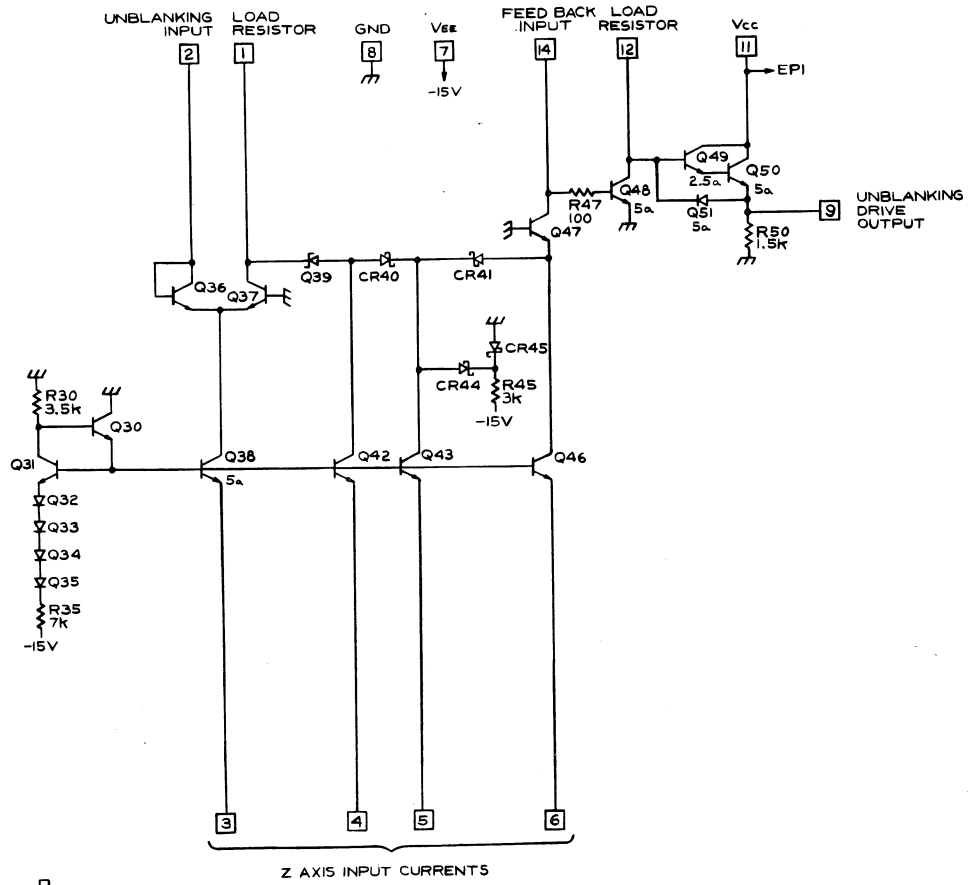

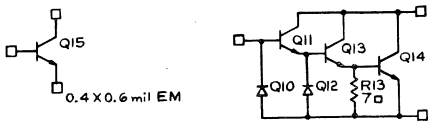

TEST METAL

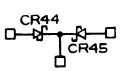

SCHOTTKY DIODES
CR44 1.0mil dia 2 mil metal
CR45 1.0mil dia 1.5 mil metal

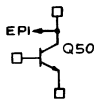

2 (0.4 X 3.0) mil EM
3 BASE CONTACTS

ENGR	M. H. Outerbridge	4-4-75	PROCESS	STD In-em w/Schottky
DWN BY	J. Langley	3-4-75	PACKAGE	20 PIN DIP
CHK BY	Dee McCrady	6-20-75	DIE SIZE	45 mil X 45 mil
TYPE	MONOLITHIC	Z AXIS & HV REGULATOR		M068
INTEGRATED CIRCUIT ENG/MFG TEKTRONIX, INC. BEAVERTON, OREGON, U.S.A.		PART NO. 155-0051-00		

GAIN TRIM AMPLIFIER 155-0059-00 M077A

DESCRIPTION

The M077A is a f_T Doubler with Nichrome emitter resistors, emitter Emitter peaking with MOS capacitors, grounded base output transistors connected similar to a multiplier for gain trim.

PROCESS . . . . . SHF II

POWER SUPPLY. . . . . .

PACKAGE . . . . . 12 Lead Small TO-8

DESIGNER . . . . . Thor Hallen

INSTRUMENT USAGE 7904
7844
7903
7912

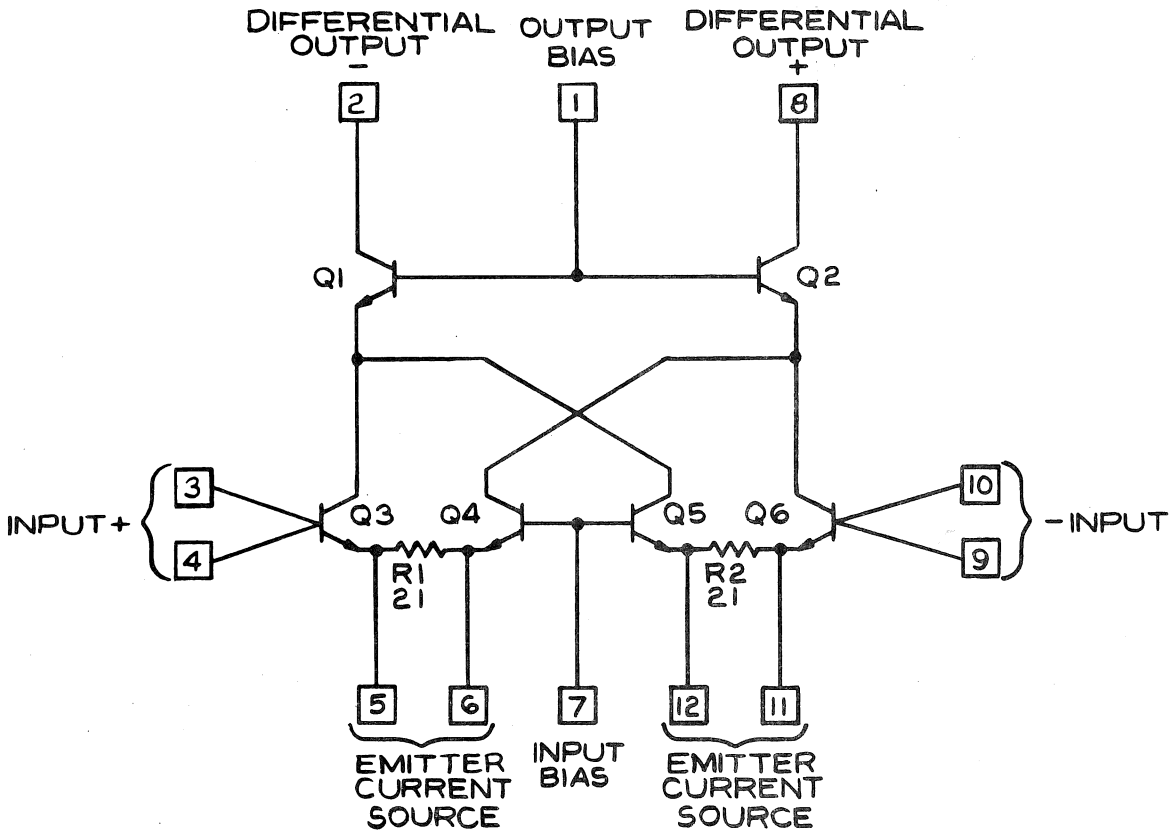

NOTE:

1. SUBSTRATE WIRE BONDED TO CASE.

ENGR	[illegible]	7-1-76	PROCESS	SHF II
DWN BY	J. Langley	6-30-76	PACKAGE	12 LEAD SMALL PATTERN TO-8
CHK BY	Linda Cayer	7-14-76	DIE SIZE	45mil X 40mil
TYPE	MONOLITHIC	GAIN TRIM AMPLIFIER		M077
INTEGRATED CIRCUIT ENG/MFG TEKTRONIX, INC. BEAVERTON, OREGON, U.S.A.		PART NO. 155-0059-00		

SWEEP CONTROL 155-0049-02 M079G

DESCRIPTION

This Integrated Circuit contains bright baseline auto circuit, single sweep circuit, and holdoff circuit with terminals for S.S Reset Ready light, triggered light, auto timing, H.O timing, and two pins for new general logic (ie, lockout and main frame delay mode control).

PROCESS	200 Ω/Sq
POWER SUPPLY.	V_{CC} +5V, V_{EE} -5V
PACKAGE	20 DIP
DESIGNER	Bill DeVey
INSTRUMENT USAGE	7B92 485 335K 464 465 466 475 7B80 485 5B31 5B40 5B52 5B42G 5B44 7B85 7B53 4851 4852 SC502 7B502 Some 475 Mods

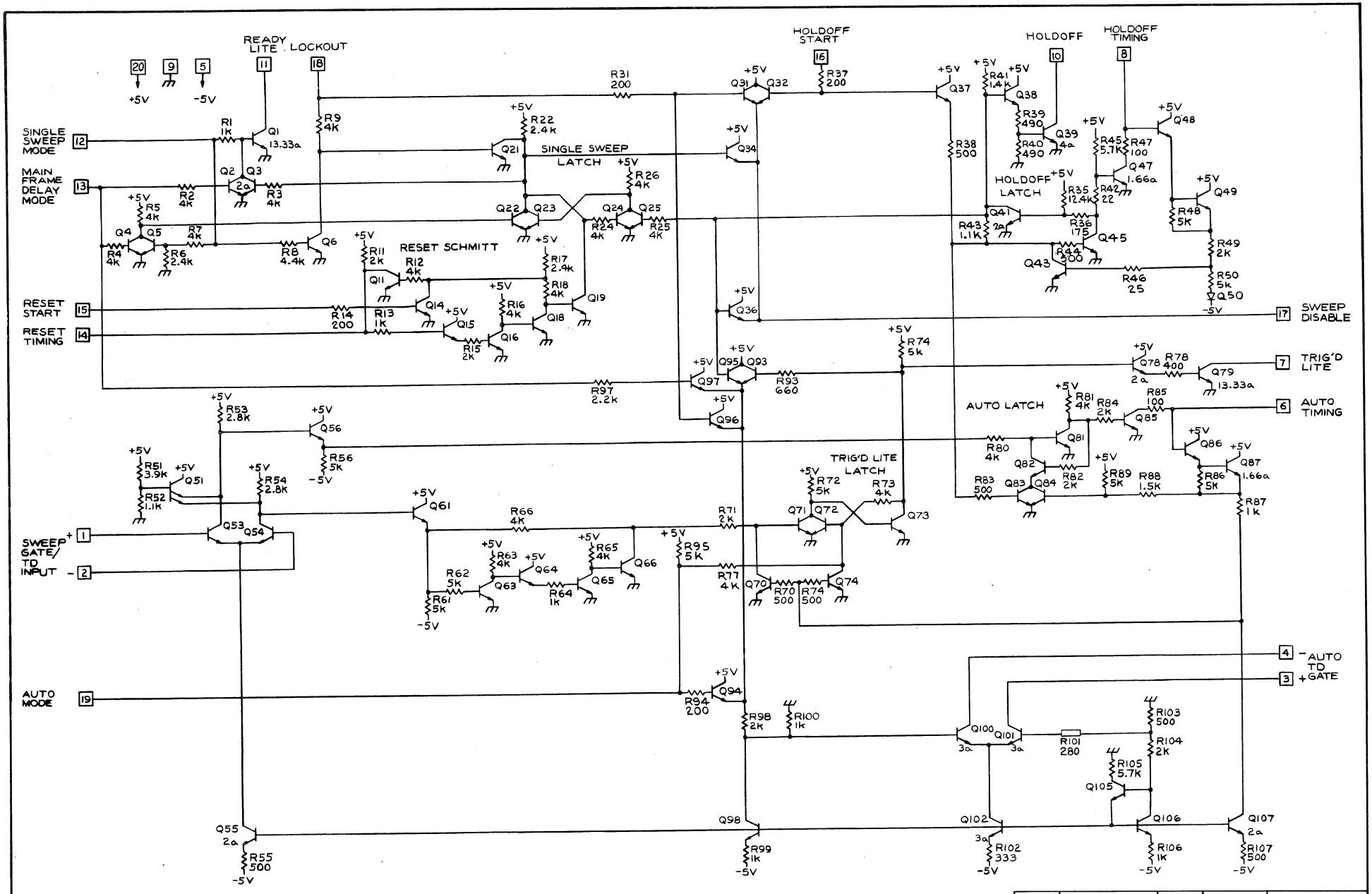

NOTE:
1. CROSS UNDER RESISTOR.
2. ALL EMITTER AREAS ARE 1a, (0.5mil X 0.6mil) UNLESS OTHERWISE INDICATED.

ENGR	M.H. Mathews	19 NOV 76	PROCESS	200Ω/□
DWN BY	J. Langley	3 NOV 76	PACKAGE	20 PIN DIP
CHK BY	C. WESTON	19 JAN 77	DIE SIZE	60 mil X 60 mil
TYPE	MONOLITHIC	SWEEP CONTROL		M0796
INTEGRATED CIRCUIT ENG/MFG TEKTRONIX, INC. BEAVERTON, OREGON, U.S.A.		PART NO. 155-0049-02		

HF OUTPUT AMPLIFIER 203-0080-90 M80C

DESCRIPTION

The M080 is fabricated by the SHF II process, and has two MOS capacitors across the Nichrome resistors. It is capable of delivering 200 mA to the output. Th M80C is used in the 155-0064-01 (H074A) and the 155-0065-00 (H074) hybrids.

PROCESS . . . . . SHF II

POWER SUPPLY. . . . . .

PACKAGE . . . . . 12 Pin TO-8

DESIGNER . . . . . Thor Hallen

INSTRUMENT USAGE 485 7844
4851 7903
4852 7904
7912

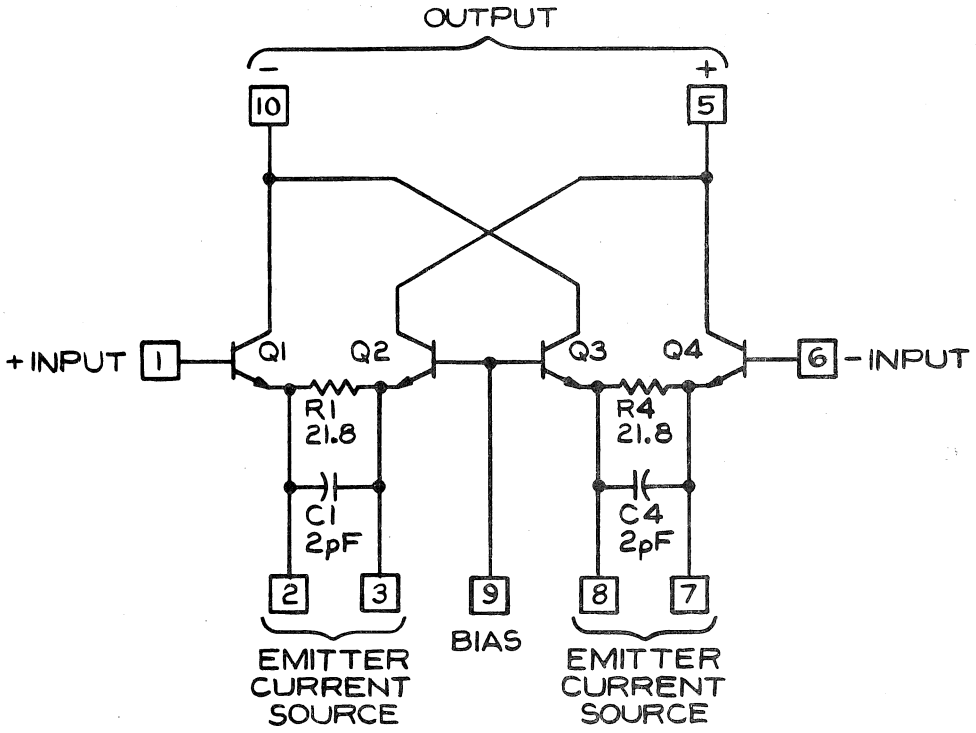

ENGR	E. Tran	7-8-76	PROCESS	SHF II
DWN BY	J. Langley	7-6-76	PACKAGE	12 LEAD LARGE PATTERN TO-8
CHK BY	Linda Boyer	7-14-76	DIE SIZE	30mil X 40mil
TYPE	MONOLITHIC	HF OUTPUT AMPLIFIER		M080C
INTEGRATED CIRCUIT ENG/MFG TEKTRONIX, INC. BEAVERTON, OREGON, U.S.A.		PART NO. 203-0080-90		

FT DOUBLER AMPLIFIER 155-0061-00 M083

DESCRIPTION

f_T Doubler Amplifier designed for the 7904 channel switch and built with the SHF II process. Equal size output transistors allow it to be used for variable and invert operations. Output transistors are designed for linear operation to 75 mA.

PROCESS . . . . . SHF II

POWER SUPPLY. . . . . .

PACKAGE . . . . . 16 DIP

DESIGNER . . . . . Hans Springer

INSTRUMENT USAGE 7B92A

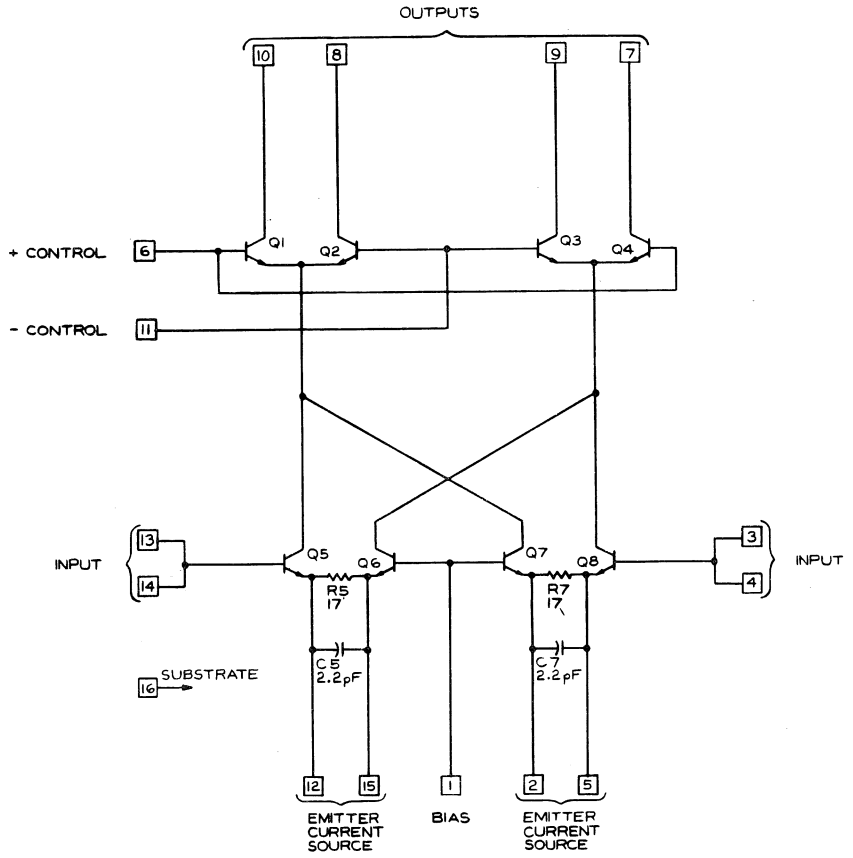

ENGR		10-28-75	PROCESS	SH II
DWN BY	J. Langley	10-22-75	PACKAGE	16 DIP
CHK BY	C. WESTON	10-28-75	DIE SIZE	50mil X 45mil
TYPE	MONOLITHIC	f_T DOUBLER AMPLIFIER		M083
INTEGRATED CIRCUIT ENG/MFG TEKTRONIX, INC. BEAVERTON, OREGON, U.S.A.		PART NO. 155-0061-00		

485 VERTICAL AMPLIFIER 155-0078-10 M84

DESCRIPTION

A differential amplifier designed for the 485 Vertical. The cascode outputs can provide gain adjust or invert functions by using the proper control voltage. All transistors have been designed to carry a maximum of 90 mA while maintaining their f_T.

PROCESS . . . . . SHF II

POWER SUPPLY. . . . . .

PACKAGE . . . . . Minipac

DESIGNER . . . . . John Addis

INSTRUMENT USAGE . . . . . .

475G	475H	475K
485	4851	4852
7A24	7A26	7A26H
7A16	7A16A	7844
7903	7904	475
7912	7834	7A26G
7A26K	P6502	AM503

067-0587-01

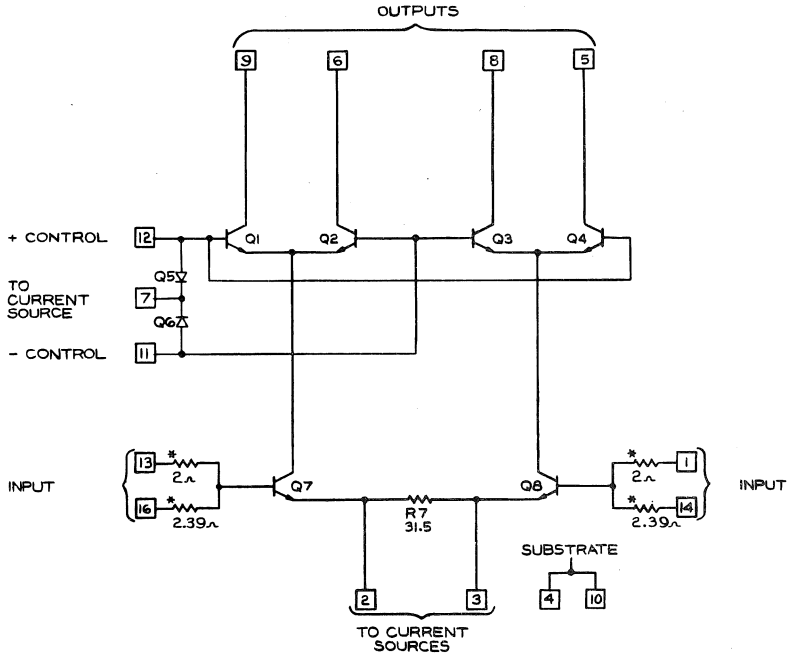

NOTE:
1. RESISTORS MARKED WITH * ARE METAL RUNS.

ENGR		10-10-75	PROCESS	SH II
DWN BY	J. Langley	10-9-75	PACKAGE	16 PIN MINIPAC
CHK BY	C. WESTON	10-27-75	DIE SIZE	50 mil X 42 mil
TYPE	MONOLITHIC	485 VERTICAL AMPLIFIER		M084E
INTEGRATED CIRCUIT ENG/MFG TEKTRONIX, INC. BEAVERTON, OREGON, U.S.A.		PART NO. 155-0078-00		

VERTICAL OUTPUT AMPLIFIER 203-0089-90 M89

DESCRIPTION

This circuit consists of three cascode stages. The first stage serves as high frequency compensation and termination for the delay line. The second stage will do gain peaking at high frequencies to compensate for the R-C roll-off at the CRT, in addition to low-frequency gain. The last stage has a fixed gain, and has terminals brought out for thermal distortion compensation, and also for external long-tails. The common base devices of the last cascode remain discrete in order to have enough breakdown voltage for a CRT. Bandwidth of the integrated circuit into a low impedance load is 600 MHz.

PROCESS	SHF II With Nichrome
POWER SUPPLY.	15 Volts
PACKAGE	TO-8 With Stud
DESIGNER	Jim Cavoretto/Einar Traa
INSTRUMENT USAGE	465G 465H 465K 7704A 335K D7704G 464 D7704H 466

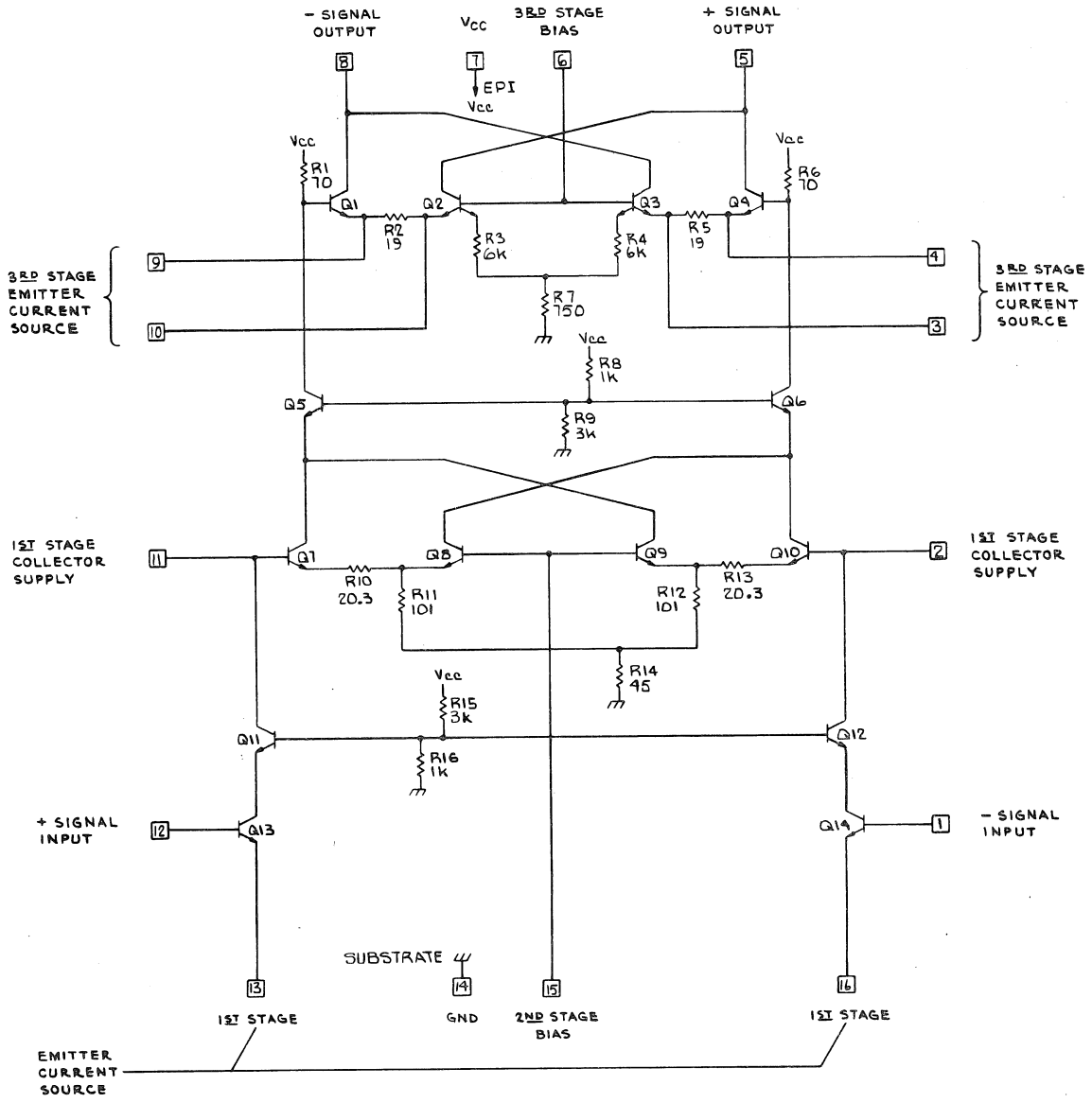

ENGR	Chan Tree	10-15-74	PROCESS	SH II
DWN BY	Pam Greene	8-8-74	PACKAGE	WAFER FORM
CHK BY	[illegible]	11-1-74	DIE SIZE	50mil x 55mil
TYPE	MONOLITHIC	VERTICAL OUTPUT AMPLIFIER		M089A
INTEGRATED CIRCUIT ENG/MFG TEKTRONIX, INC. BEAVERTON, OREGON, U.S.A		PART NO. 203-0089-90		

POWER SUPPLY REGULATOR 155-0067-02 M091B

DESCRIPTION

Designed to control DC to DC inverter supplies, it provides the necessary circuitry to do all regulation and protection of the inverter system.

Inputs are provided to:

1. Sense and Control Secondary Voltage Faults (detected by a bi-directional, ground-reference node, Pin 2).
2. Sense and Limit Maximum Inverter Current (Pin 13).
3. Sense Line Voltage (Pin 3), Present (Pin 3).
4. Sense Inverter Current Phase (Pins 10 and 11).

Outputs (Pins 8 and 9) control the inverter base drive circuitry.

PROCESS . . . . . 200 Ω/Sq

POWER SUPPLIES . . . . . V_{CC}: Requires a current source, internally regulated at 7.5V

V_{EE}: -2 Volts

PACKAGE . . . . . 16 DIP

DESIGNERS. . . . . Joe Burger/Gene Andrews

INSTRUMENT USAGE 485 7844
7904 7903
7904A 7912
4851 P7001
4852 434
A7704 7704A

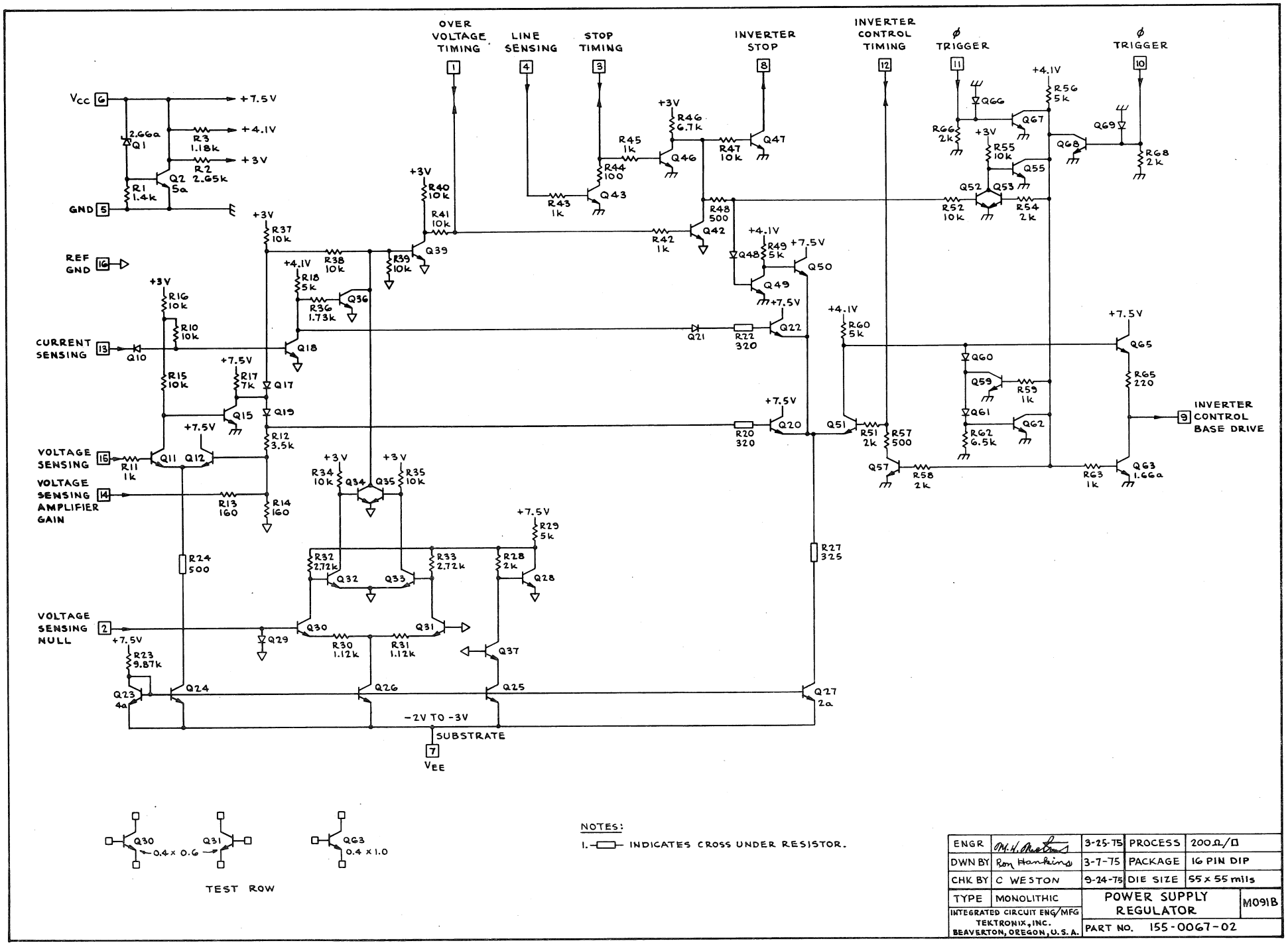

NOTES:

1. —▭— INDICATES CROSS UNDER RESISTOR.

ENGR	M.H. Rhodes	3-25-75	PROCESS	200Ω/□
DWN BY	Ron Hankins	3-7-75	PACKAGE	16 PIN DIP
CHK BY	C WESTON	9-24-75	DIE SIZE	55 x 55 mils
TYPE	MONOLITHIC	POWER SUPPLY REGULATOR		M091B
INTEGRATED CIRCUIT ENG/MFG TEKTRONIX, INC. BEAVERTON, OREGON, U.S.A.		PART NO. 155-0067-02		

INPUT PROTECTION AND PROBE LOGIC 155-0076-00 M94

DESCRIPTION

The M94 controls the 50 Ω, 1 MΩ mode of the 485 Oscilloscope. It provides input protection and controls a "Mode Switch" lamp and lights a "Reset" lamp during overload. This device also performs an approximate RMS conversion on the input signal voltage and, with an external capacitor, integrates the result to obtain a signal proportional to heat generated in a 50 Ω attenuator. Excess signal trips a relay which can be used to open the input signal and protect the input (50 Ω) attenuator.

As a secondary feature, the M094 also provides a X1, X10, X100, and trace identify functions for readout from a readout coded BNC. Lights appropriate LED and extinguishes all LED's during ID mode.

PROCESS	200 Ω/Sq
POWER SUPPLY.	V_{CC} +5V, V_{EE} -5V
PACKAGE	Minipac
DESIGNER	John Addis
INSTRUMENT USAGE	4851 4852 485

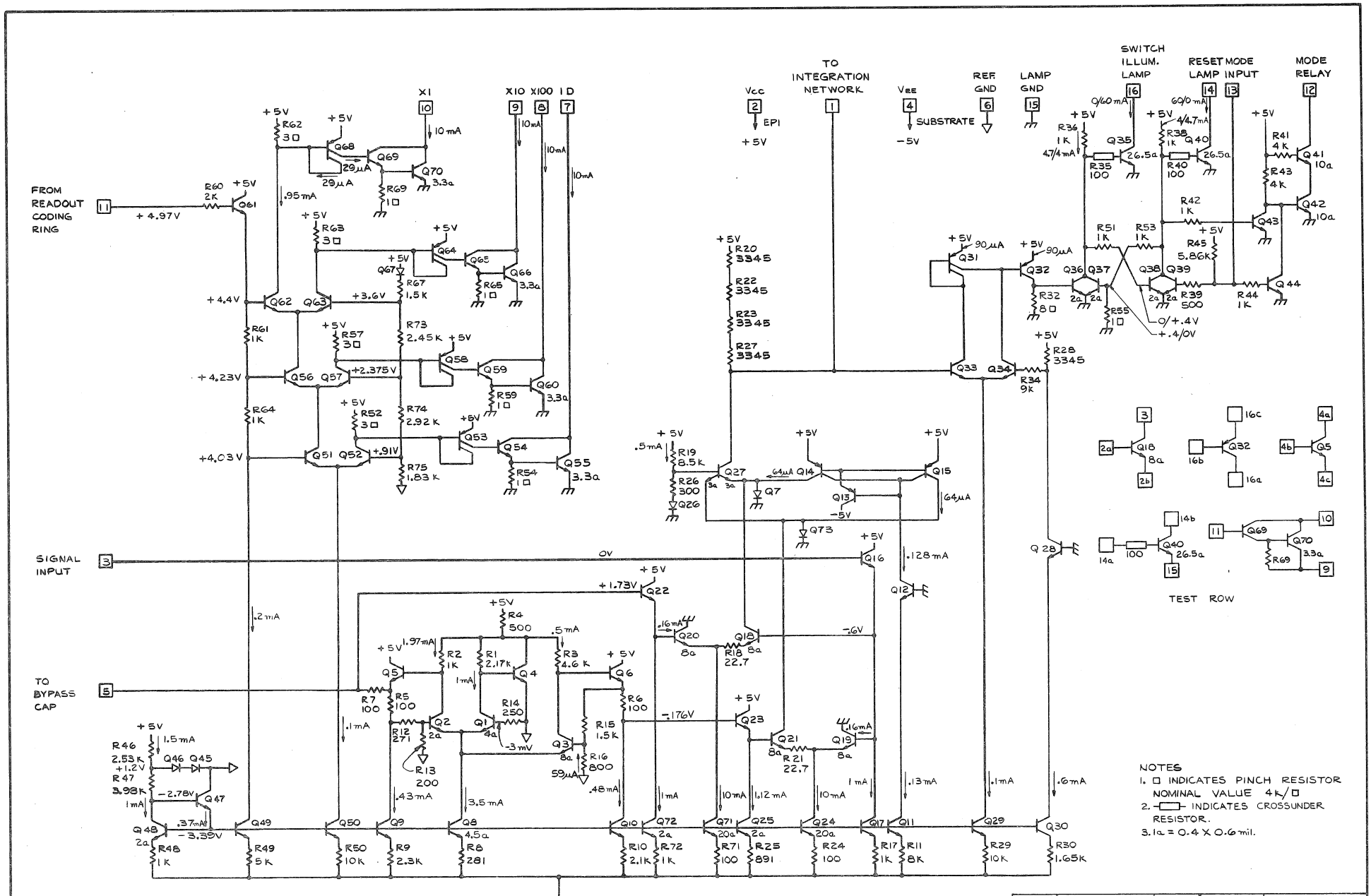

NOTES
1. □ INDICATES PINCH RESISTOR NOMINAL VALUE 4K/□
2. -▭- INDICATES CROSSUNDER RESISTOR.
3. 1a = 0.4 X 0.6 mil.

ENGR.	M. H. Mulder	3-9-76	PROCESS	200 Ω/□
DWN. BY	S. POLENDEY	2-1-76	PACKAGE	16 PIN MINIPAC
CHK. BY	Linda Berger	6-1-76	DIE SIZE	60 mil X 60 mil
TYPE	MONOLITHIC	PROBE LOGIC & INPUT PROTECTION		M094E
INTEGRATED CIRCUIT ENG/MFG TEKTRONIX, INC. BEAVERTON, OREGON, U.S.A.		PART NO. 155-0076-00		

CHANNEL SWITCH 155-0091-00 M095A

DESCRIPTION

Consists of one FT-Doubler cascode stage per channel, with parallel outputs. The channel switching is done by switching the dual common base transistors in these cascode stages. The circuit also has provisions for trigger pick-offs from each channel.

The input is 20 mV/DIV into built-in 50 ohm terminations, at a DC level of -5 V. The output is 1 mA/DIV into reverse terminated 50 ohm line (ie., 20 Ω x 1 mA = 25 mV/DIV at ground DC level).

Dissipation is 1 watt.

PROCESS	SHF II
POWER SUPPLY.	-8 Volts, Ground
PACKAGE	16 Lead Large Pattern TO-8 With Brazed Molyshim
DESIGNERS.	Einar Traa/Jim Woo
INSTRUMENT USAGE	None

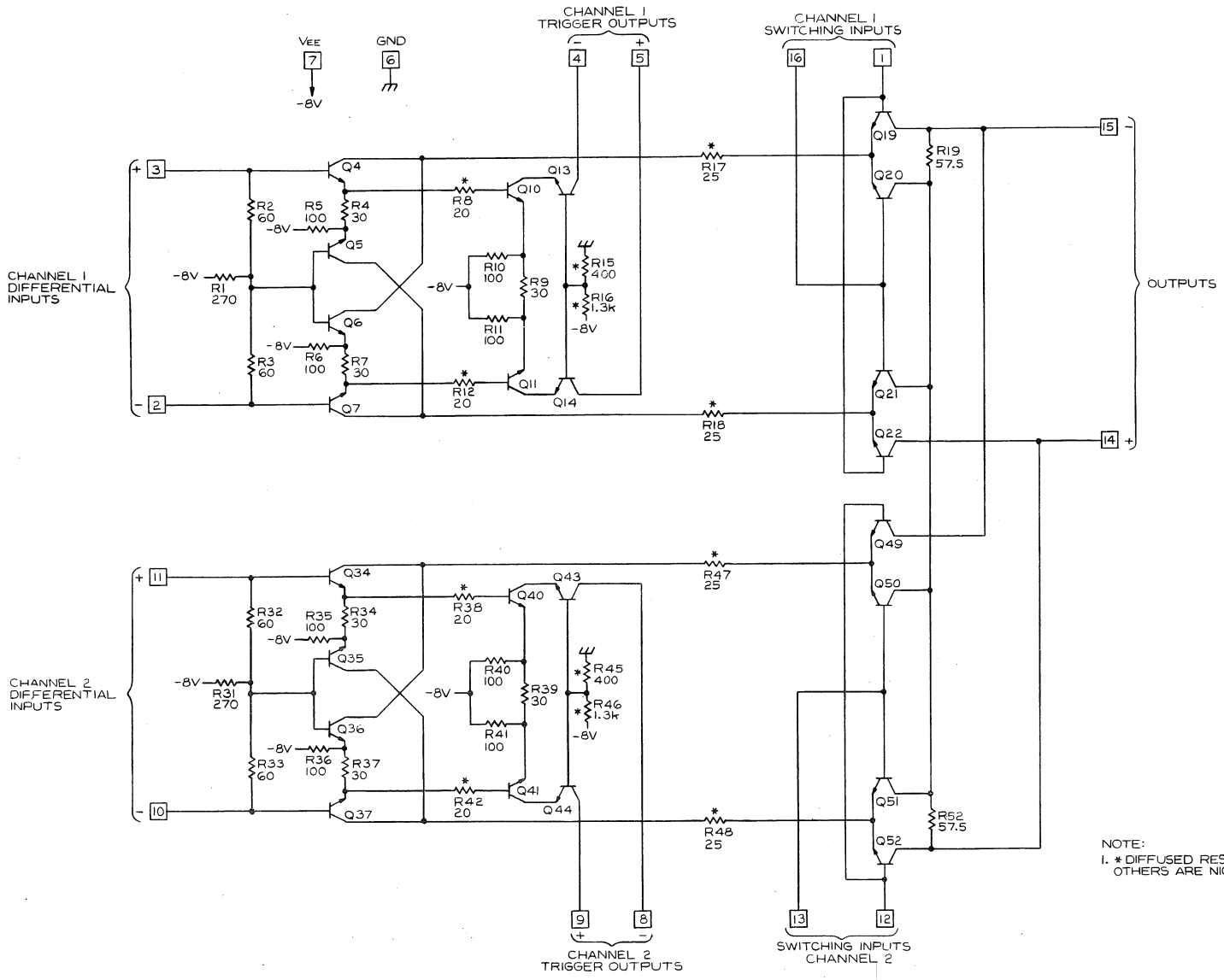

NOTE:
1. * DIFFUSED RESISTORS, OTHERS ARE NICHROME.

ENGR	Jim Moo	3-5-76	PROCESS	SHF II
DWN BY	J. Langley	2-3-76	PACKAGE	16 PIN TO-8 LG.
CHK BY	Linda Sarju	3-10-76	DIE SIZE	60mil X 60mil
TYPE	MONOLITHIC	CHANNEL SWITCH		M095A
INTEGRATED CIRCUIT ENG/MFG TEKTRONIX, INC. BEAVERTON, OREGON, U.S.A.		PART NO. 155-0091-00		

NORMALIZING CIRCUIT 155-0106-00 M101B

DESCRIPTION

The M101B is a programmable function generator constructed as an integrated circuit. It produces an output voltage or current which is a programmable function of an input voltage or current at 19 evenly spaced values of the input voltage or current. For values of the input signal between 19 points, the output is a linear interpolation between the output values at the nearest points. The programming of each point is independent of all other points, and the output at any point can be established by the ratio of two resistors.

PROCESS . . . . . 200 Ω/Sq

POWER SUPPLY. . . . . V_{CC} ØV, V_{EE} -15V

PACKAGE . . . . . 24 DIP

DESIGNER . . . . . John Pace

INSTRUMENT USAGE J20

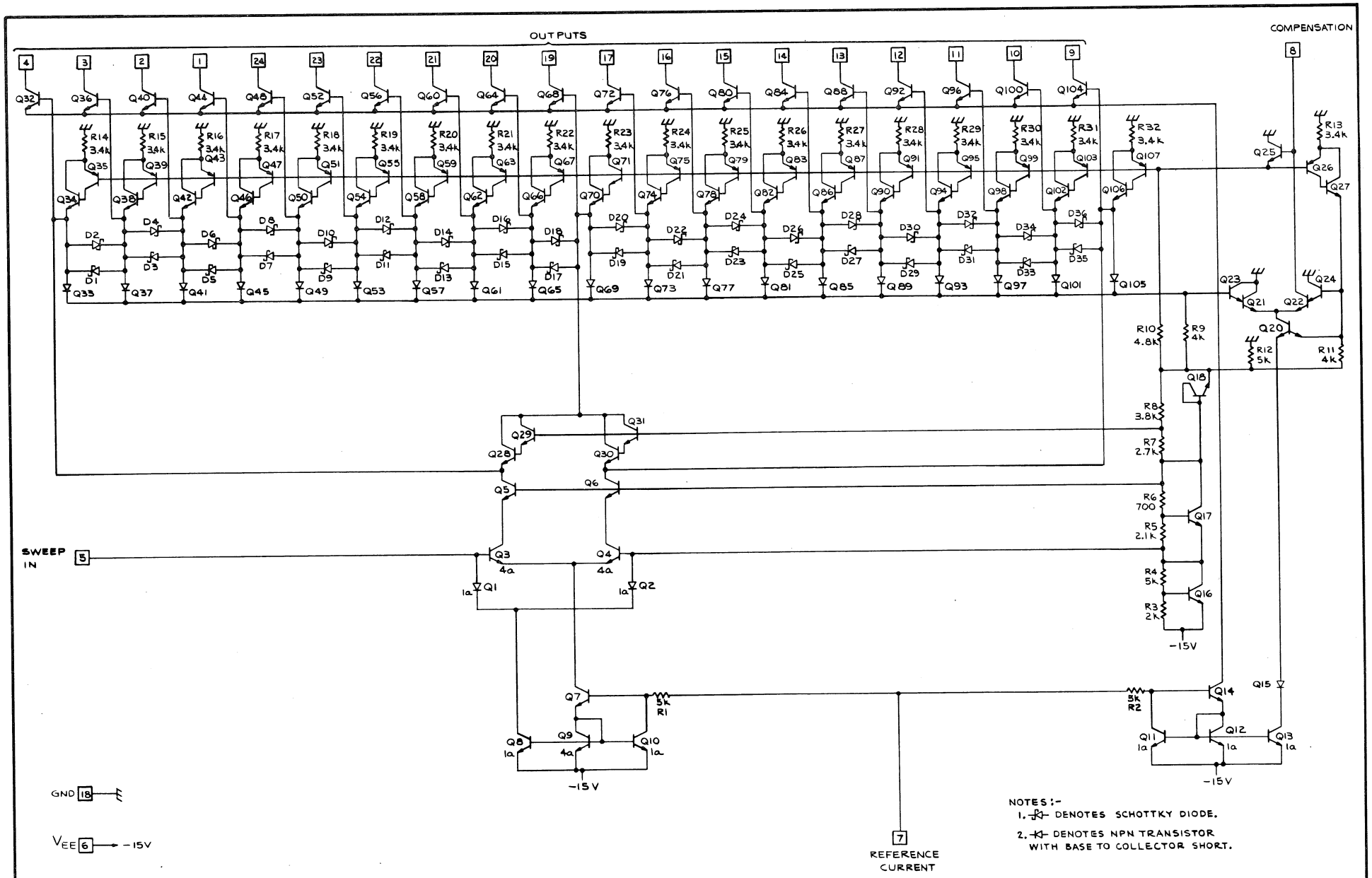

NOTES:-
1. -|K- DENOTES SCHOTTKY DIODE.
2. -|K- DENOTES NPN TRANSISTOR WITH BASE TO COLLECTOR SHORT.

ENGR	Walt Chinsworth	1-21-77	PROCESS	200 Ω/□
DWN BY	S. POLENDEY	4-8-76	PACKAGE	24 DIP
CHK BY	David Van Cleve	6-10-76	DIE SIZE	60 mil X 65 mil
TYPE	MONOLITHIC	NORMALIZING CIRCUIT		M1018
INTEGRATED CIRCUIT ENG/MFG TEKTRONIX, INC. BEAVERTON, OREGON, U.S.A.		PART NO. 155-0106-00		

VERTICAL OUTPUT AMPLIFIER 203-0102-90 M102

DESCRIPTION

This circuit is similiar to the M89 (203-0089-90) except for a 98 Ω Nichrome resistor added between the Input Emitters as an integral part of the chip.

PROCESS . . . . . SHF II With Nichrome

POWER SUPPLY. . . . . 15 Volts

PACKAGE . . . . . TO-8 With Stud

DESIGNER . . . . . Einar Traa

INSTRUMENT USAGE 475

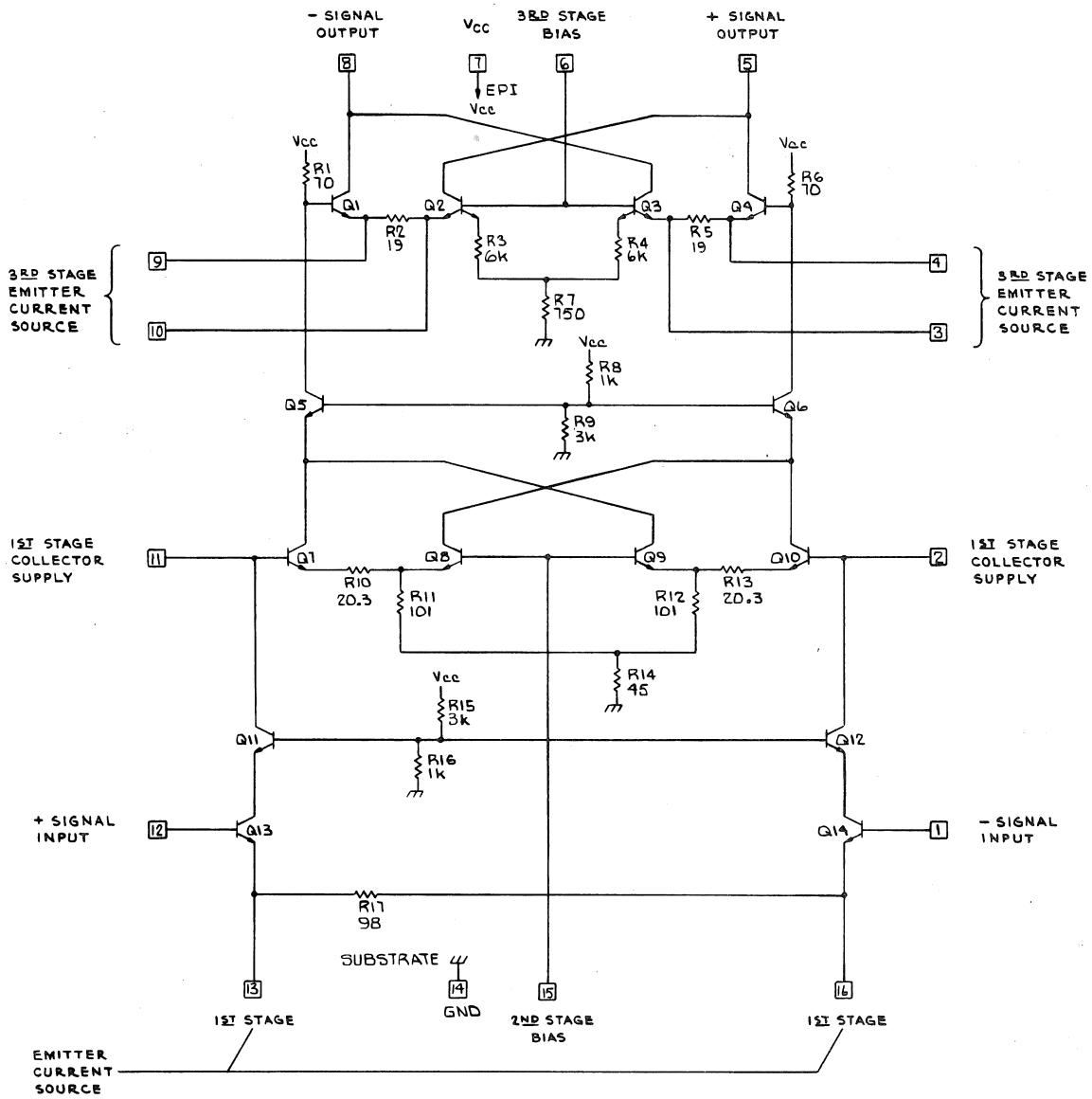

ENGR	Susan Tracz	10-28-74	PROCESS	5H II
DWN BY	Pam Cherrie	8-8-74	PACKAGE	WAFER FORM
CHK BY	D.K. Nakata	11-1-74	DIE SIZE	50 mil x 55 mil
TYPE	MONOLITHIC	VERTICAL OUTPUT AMPLIFIER		M102A
INTEGRATED CIRCUIT ENG/MFG TEKTRONIX, INC. BEAVERTON, OREGON, U.S.A		PART NO. 203-0102-90		

DUAL OP-AMPS AND CHANNEL SWITCH 155-0083-00 M105

DESCRIPTION

A variation of the "Quad Op-Amp" (M053) with internal "pin-out" such that the two of the Op-Amps that have separate outputs share a common reference current source determining their current operating level while the other two Op-Amps share a common output but are connected so as to have separate reference current sources so they can be operated on an either/or basis. This unit was originally designed as Dual Input Amplifier and Channel Switch.

PROCESS	200 Ω/Sq
POWER SUPPLY.	V_{CC} +5V to -15V V_{EE} -5V to -15V
PACKAGE	16 Minipac
DESIGNER	Dave Allen
INSTRUMENT USAGE	212 214

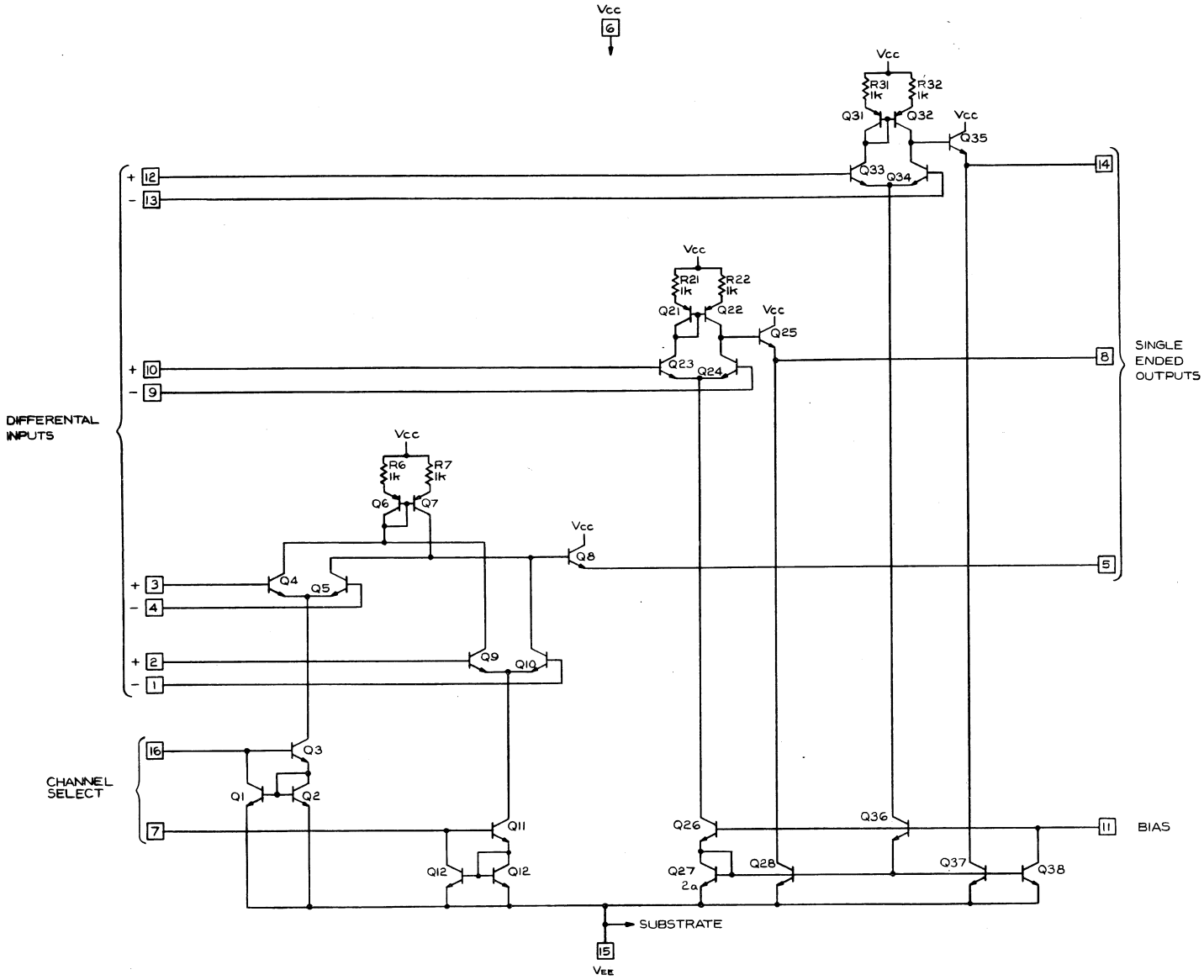

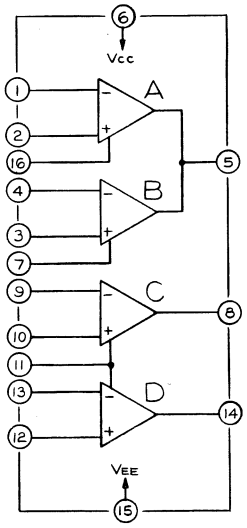

ENGR	M. H. Arthur	2-5-76	PROCESS	200 Ω/□
DWN BY	J. Langley	1-26-76	PACKAGE	16 MINIPAC
CHK BY	Linda Boyer	2-20-76	DIE SIZE	40mil X 40mil
TYPE	MONOLITHIC	QUAD OPERATIONAL AMPLIFIER		M105
INTEGRATED CIRCUIT ENG/MFG TEKTRONIX, INC BEAVERTON, OREGON, U.S.A.		PART NO. 155-0083-00		

DESCRIPTION

This integrated circuit is identical to the M092 with a different metal mask to change the time slot coding.

ROM PROGRAMMING - TIME SLOT

	0	1	2	3	4	5	6	7	8	9	10	11	12	13	14	15
1														2		
2										1						
3												1				
4												4				
5										4						
6						1	4	5	2	2	2	2	2		6	
7						1	4	5		2	1	2	1		6	
8						1	4	5	1	2		2	1		6	
9						1	4	5	2	2	2	2	1			
10						1	4	5		2	1	2				
11						1	4	5	1	2		2				
12						1	4	5		1		1				

NOTE: The number in the square is in terms of tenths of mA of output current. Crossed out area is not used.

PROCESS . . . . . 200 Ω/Sq

POWER SUPPLY. . . . . V_{CC} ØV, V_{EE} -15V

PACKAGE . . . . . 20 DIP

DESIGNERS. . . . . Roger McCoy/Mike Metcalf

INSTRUMENT USAGE 7L5 (R1)

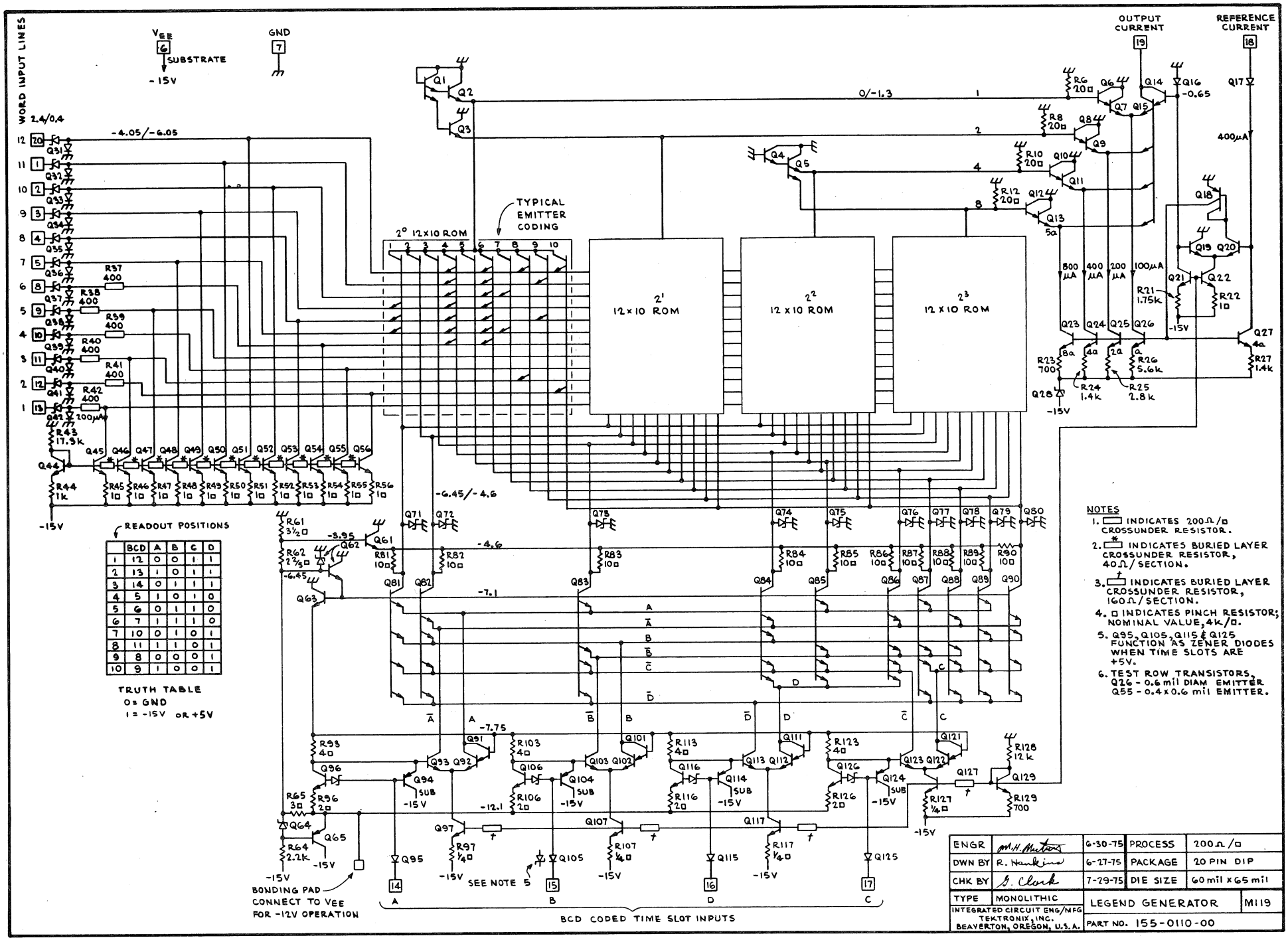
WORD INPUT LINES
VEE
SUBSTRATE
-15V
GND
OUTPUT CURRENT
REFERENCE CURRENT
TYPICAL EMITTER CODING
2° 12x10 ROM
2¹ 12x10 ROM
2² 12x10 ROM
2³ 12x10 ROM
400μA
800 μA
400 μA
200 μA
100μA
BONDING PAD CONNECT TO VEE FOR -12V OPERATION
SEE NOTE 5
BCD CODED TIME SLOT INPUTS
READOUT POSITIONS
TRUTH TABLE
0 = GND
1 = -15V OR +5V
NOTES
1. INDICATES 200Ω/□ CROSSUNDER RESISTOR.
2. INDICATES BURIED LAYER CROSSUNDER RESISTOR, 40Ω/SECTION.
3. INDICATES BURIED LAYER CROSSUNDER RESISTOR, 160Ω/SECTION.
4. □ INDICATES PINCH RESISTOR; NOMINAL VALUE, 4k/□.
5. Q95, Q105, Q115 & Q125 FUNCTION AS ZENER DIODES WHEN TIME SLOTS ARE +5V.
6. TEST ROW TRANSISTORS, Q26 - 0.6 mil DIAM EMITTER Q55 - 0.4x0.6 mil EMITTER.
ENGR M.H. Mutters 6-30-75 PROCESS 200Ω/□
DWN BY R. Hawkins 6-27-75 PACKAGE 20 PIN DIP
CHK BY J. Clark 7-29-75 DIE SIZE 60 mil x 65 mil
TYPE MONOLITHIC
INTEGRATED CIRCUIT ENG/MFG TEKTRONIX, INC. BEAVERTON, OREGON, U.S.A.
LEGEND GENERATOR M119
PART NO. 155-0110-00

TRIGGER CIRCUIT 155-0109-00 M120B

DESCRIPTION

This circuit is intended for use in instruments in the medium to high frequency range. It employs SHF II processing, ECL circuitry, requires one power supply and dissipates about 500 mW. The cir- should be driven differentially. Hysteresis at low frequencies is 40 mV and increases by a factor of 3 at 400 MHz. DC trigger input levels are at about 3.8 volts. A slope select control is included. Input signal conditioning (ie. preamplification and source selection) is done external to the Integrated Circuit. Another Integrated Circuit, the M121 (155-0126-00), has been designed to accomplish this. Other inputs are hold-off and end-sweep (tied together in typical application). A free run input is also provided. Gate out is at an ECL level.

PROCESS . . . . . SHF II

POWER SUPPLY. . . . . V_{CC} +5 Volts

PACKAGE . . . . . 16 DIP (Kovar-Copper-Kovar)

DESIGNER . . . . . Gary Vance

INSTRUMENT USAGE 5B31 7B81P
5B40 7B80
5B44 7B85
SC502 7B50A
5S14N 7S14

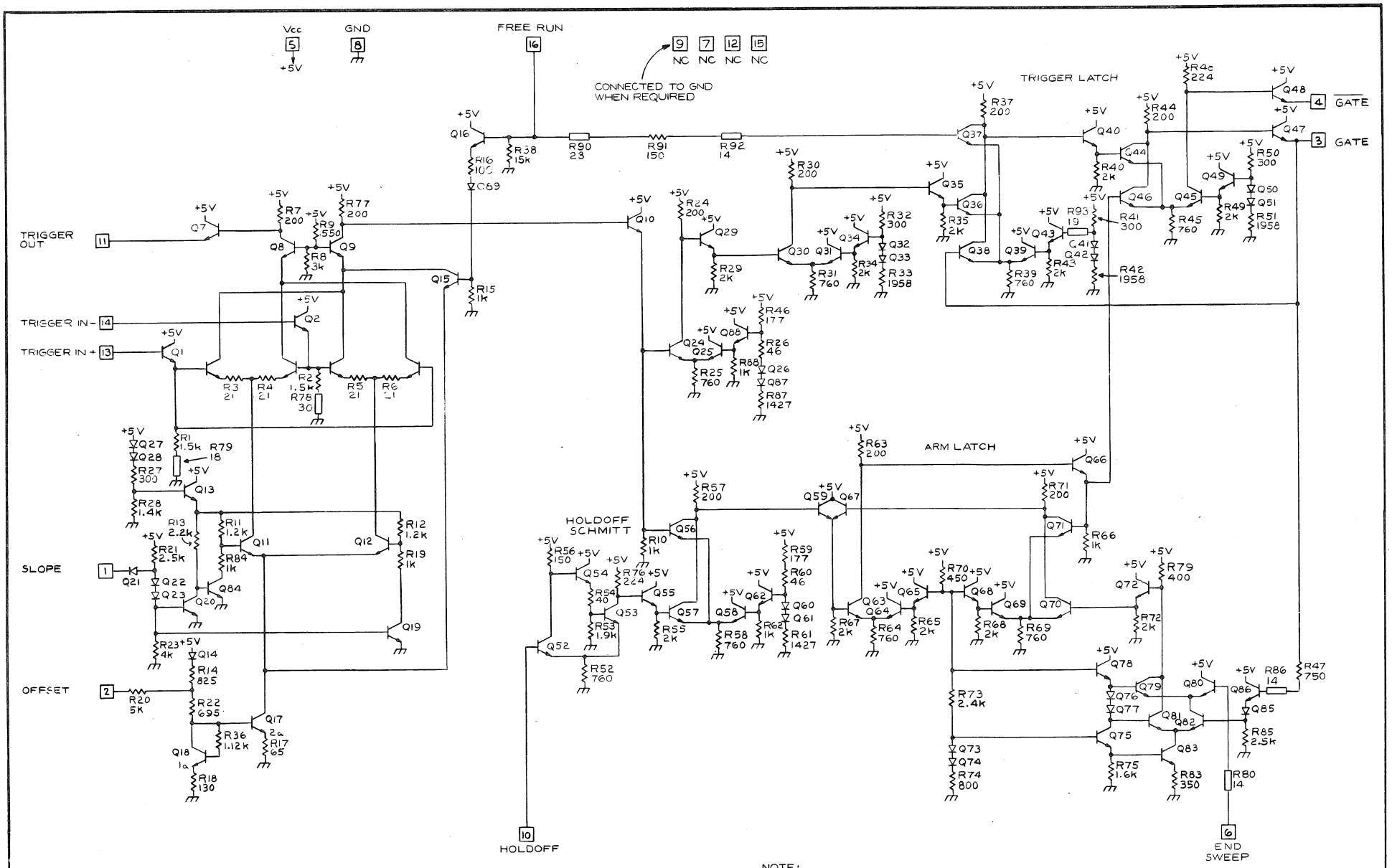

ENGR	Walt Ammon	9-26-75	PROCESS	SH II
DWN BY	J. Langley	1-17-75	PACKAGE	16 PIN DIP
CHK BY	C. WESTON	7-30-76	DIE SIZE	65 mil x 65 mil
TYPE	MONOLITHIC	TRIGGER		M120B
INTEGRATED CIRCUIT ENG/MFG TEKTRONIX, INC. BEAVERTON, OREGON, U.S.A.		PART NO. 155-0109-01		

TRIGGER AMPLIFIER/SOURCE SELECT/ PEAK-TO-PEAK AUTO

155-0126-00 M121

DESCRIPTION

The M121 is designed to be used with the M120 (155-0109-00) in medium-to-high frequency instruments. It employs SHF II processing and requires two power supplies; +5 volts and a current source (25 mA out of the integrated circuit source compliance must range at least from -4.5 volts to -5.5 volts). Power dissipation is 425 mV. Provision is made for trigger source switching (5 inputs, high frequency rejection, trigger view, and peak-to-peak auto operation with the addition of external components. A level control is also provided. Input ignal range is centered around ground, with input sensitivity of 4 - 5 mV when used with the M120. Maximum amplifier gain is 9, and bandwidth is 600 MHz. A selected version of the M121 having all of the above features except for the peak-to-peak auto mode is available.

PROCESS	SHF II
POWER SUPPLY.	V_{CC} +5V, I_{EE} -25 mA
PACKAGE	20 Pin DIP (Kovar-Copper-Kovar)
DESIGNER	Art Metz
INSTRUMENT USAGE	7B81P 7B85 7B80 7B50A

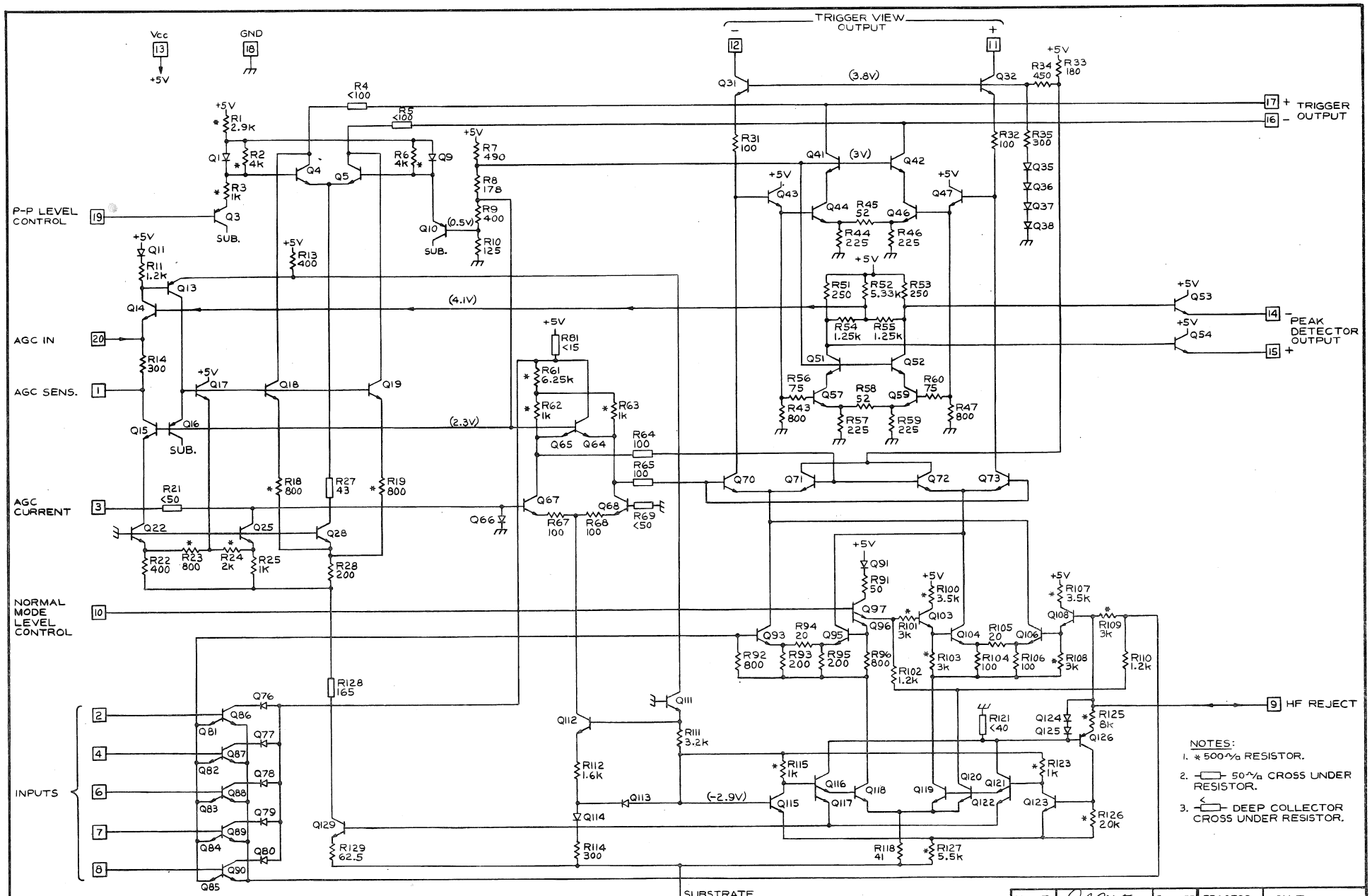

ENGR		5-20-75	PROCESS	SH II
DWN BY	J. Langley	2-5-75	PACKAGE	20 PIN DIP
CHK BY		7-22-75	DIE SIZE	65mil X 65mil
TYPE	MONOLITHIC	TRIGGER AMPLIFER		M121C
INTEGRATED CIRCUIT ENG/MFG TEKTRONIX, INC. BEAVERTON, OREGON, U.S.A.		PART NO. 155-0126-00		

FAST TRIGGER SOURCE 203-0122-90 M122B

DESCRIPTION

This circuit is intended for use in high frequency instruments. It employs SHF III processing, ECL/E^2L circuitry, dissipates about 600 mW, and is packaged in a 1.25 cm x 1.25 cm hybrid substrate (155-0150-00, H473). The circuit should be driven differentially. Input T-coiling is accomplished by a combination of the M122 integrated circuit and the hybrid (the 50 Ω load resistors are not included in the hybrid). Hysteresis at low frequencies is 25 mV and increases by a factor of 2 - 3 at 1.2 GHz. DC trigger input levels are at Ø volts. A slope select control is included. Input signal conditioning (ie, preamplification and source selection) is done external to the integrated circuit. Another integrated circuit, the M136 (155-0160-00), has been designed to accomplish this. Other inputs are hold-off and free-run (if that mode is to be used). Gate out is at an ECL level.

PROCESS	SHF III
POWER SUPPLY.	V_{CC} +5V, V_{EE} -5V
PACKAGE	1.25 cm x 1.25 cm Hybrid
DESIGNERS.	Art Metz/Walt Ainsworth
INSTRUMENT USAGE	7B10 7B15 7B92A 7904 7104

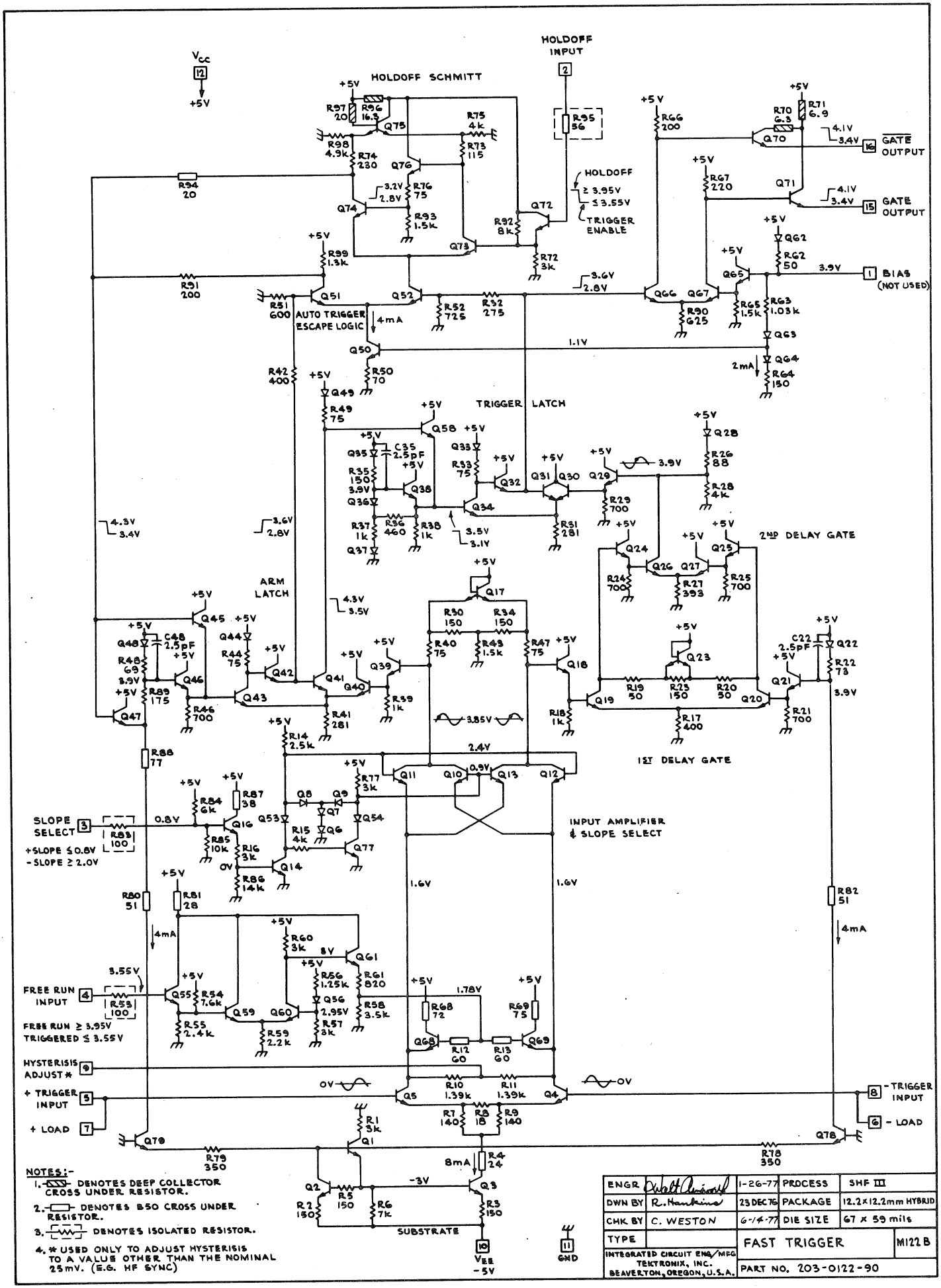
HOLDOFF INPUT
HOLDOFF SCHMITT
AUTO TRIGGER ESCAPE LOGIC
TRIGGER LATCH
ARM LATCH
2ND DELAY GATE
1ST DELAY GATE
INPUT AMPLIFIER & SLOPE SELECT
GATE OUTPUT
BIAS (NOT USED)
SLOPE SELECT
+SLOPE ≤ 0.8V
-SLOPE ≥ 2.0V
FREE RUN INPUT
FREE RUN ≥ 3.95V
TRIGGERED ≤ 3.55V
HYSTERISIS ADJUST *
+ TRIGGER INPUT
+ LOAD
- TRIGGER INPUT
- LOAD
HOLDOFF
≥ 3.95V
≤ 3.55V
TRIGGER ENABLE
SUBSTRATE
VEE -5V
GND
NOTES:-
1. DENOTES DEEP COLLECTOR CROSS UNDER RESISTOR.
2. DENOTES B50 CROSS UNDER RESISTOR.
3. DENOTES ISOLATED RESISTOR.
4. * USED ONLY TO ADJUST HYSTERISIS TO A VALUE OTHER THAN THE NOMINAL 25mV. (E.G. HF SYNC)
ENGR
DWN BY R. Hankins 23 DEC 76
CHK BY C. WESTON 6-14-77
TYPE
INTEGRATED CIRCUIT ENG/MFG TEKTRONIX, INC. BEAVERTON, OREGON, U.S.A.
1-26-77
PROCESS SHF III
PACKAGE 12.2x12.2mm HYBRID
DIE SIZE 67 x 59 mils
FAST TRIGGER
M122B
PART NO. 203-0122-90

5 DIGIT BCD COUNTER 155-0119-00 M123

DESCRIPTION

The M123 is a five digit BCD counter with the outputs buffered and multiplexed. The maximum input count frequency is 5 MHz and an overflow latch is provided to detect over range counts. The chip also contains latches for four higher order digits which can be loaded from external counter stages. All nine digits are multiplex out serially. Digit strobes are provided in order to easily interface to LED readouts. The output multiplexer can be set to strobe out only the five least significant digits. An extra strobe is provided as a time slot for points or units. The output of the fourth decade is also brought out.

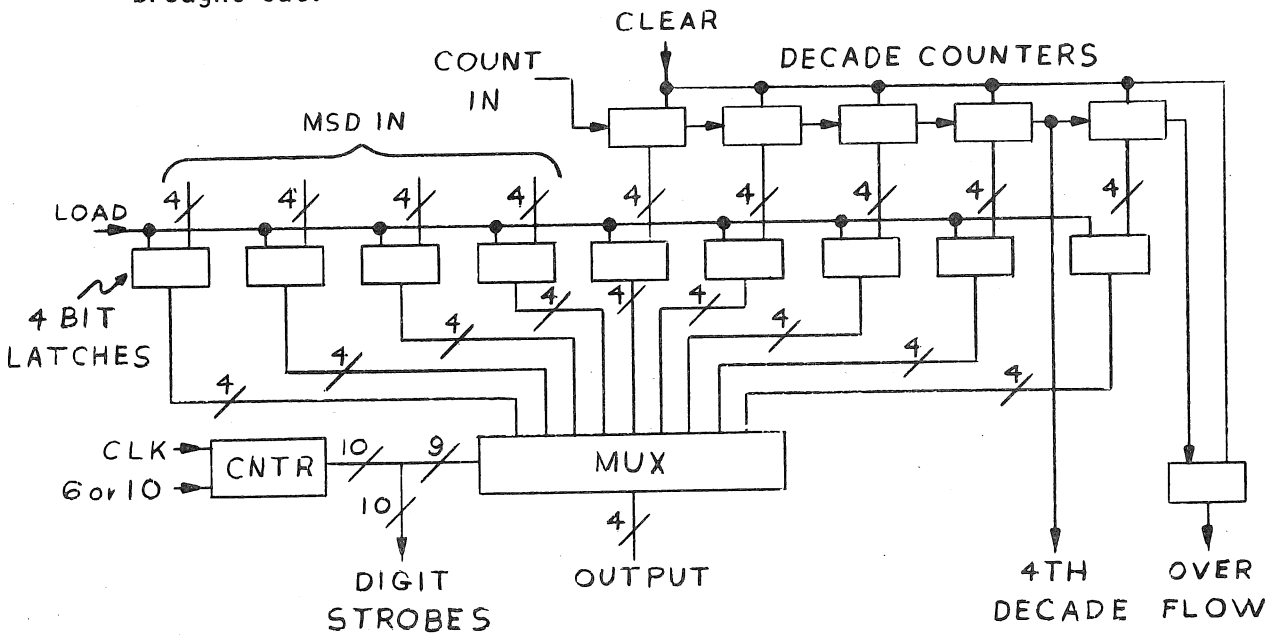

PROCESS	MOS
POWER SUPPLY.	+5V, -5V, -15V
PACKAGE	40 DIP
DESIGNER	Dave Allstot
INSTRUMENT USAGE	DC 508

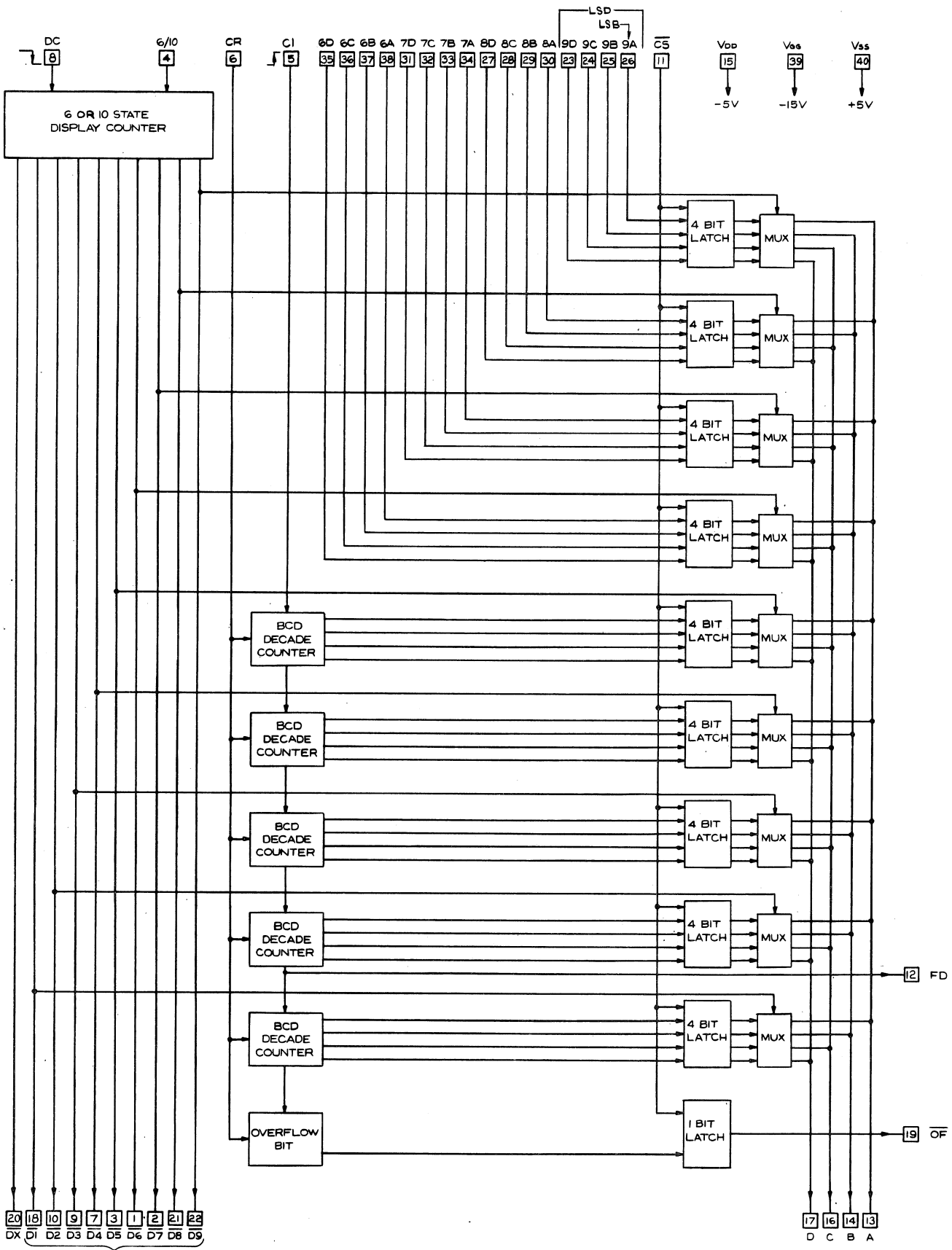

ENGR	J H CONNELL	1-16-76	PROCESS	MOS
DWN BY	J. Langley	1-9-76	PACKAGE	40 PIN DIP
CHK BY	Linda Bergen	2-25-76	DIE SIZE	125MIL X 130 MIL
TYPE	MONOLITHIC	5 DIGIT BCD COUNTER BLOCK DIAGRAM		M123A
INTEGRATED CIRCUIT ENG/MFG TEKTRONIX, INC BEAVERTON, OREGON, U.S.A.		PART NO. 155-0119-00		

SYNC STRIPPER 155-0144-00 M124

DESCRIPTION

This circuit provides a means of precisely determining the time of occurrence of the 50% points of the horizontal sync pulses accompanying a wide variety of different composite video systems. Several auxilliary outputs are available to aid in system control.

PROCESS	200 Ω/Sq
POWER SUPPLY.	+15V
PACKAGE	16 DIP
DESIGNERS.	Steve Roth Ken Schlotzhauer
INSTRUMENT USAGE	1410 1470

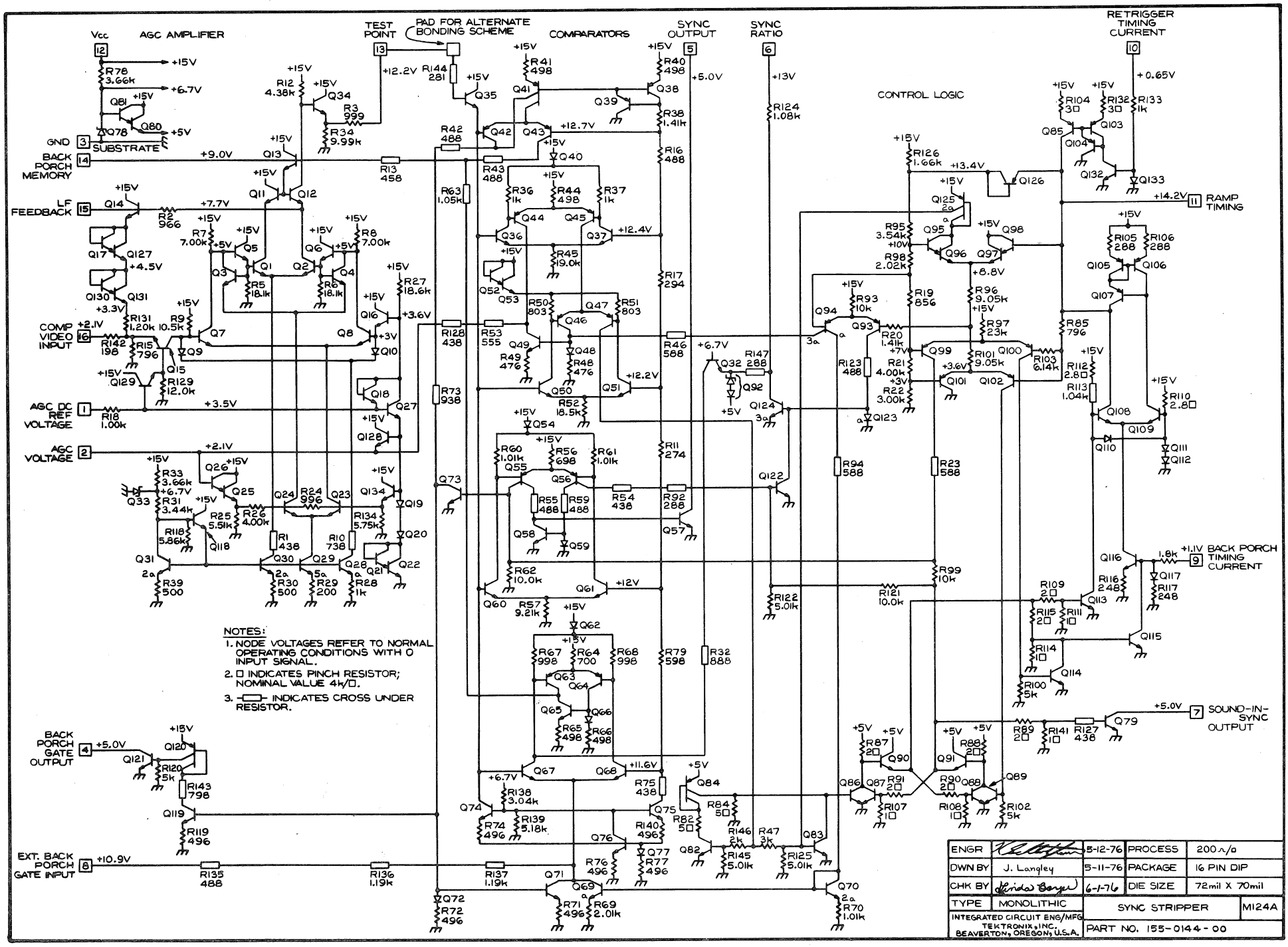
AGC AMPLIFIER
TEST POINT
PAD FOR ALTERNATE BONDING SCHEME
COMPARATORS
SYNC OUTPUT
SYNC RATIO
RETRIGGER TIMING CURRENT
CONTROL LOGIC
Vcc
GND
SUBSTRATE
BACK PORCH MEMORY
LF FEEDBACK
COMP VIDEO INPUT
AGC DC REF VOLTAGE
AGC VOLTAGE
BACK PORCH GATE OUTPUT
EXT. BACK PORCH GATE INPUT
RAMP TIMING
BACK PORCH TIMING CURRENT
SOUND-IN-SYNC OUTPUT
NOTES:
1. NODE VOLTAGES REFER TO NORMAL OPERATING CONDITIONS WITH 0 INPUT SIGNAL.
2. □ INDICATES PINCH RESISTOR; NOMINAL VALUE 4k/□.
3. -▭- INDICATES CROSS UNDER RESISTOR.
ENGR 5-12-76 PROCESS 200Ω/□
DWN BY J. Langley 5-11-76 PACKAGE 16 PIN DIP
CHK BY 6-1-76 DIE SIZE 72mil X 70mil
TYPE MONOLITHIC
SYNC STRIPPER M124A
INTEGRATED CIRCUIT ENG/MFG TEKTRONIX, INC. BEAVERTON, OREGON, U.S.A.
PART NO. 155-0144-00

M124A SYNC STRIP CIRCUIT

INTRODUCTION

TV Waveforms

A detail of a typical line of a composite video waveform is shown on the block diagram. The complete signal, containing one frame of the televised picture, is made up of 525 lines interlaced into two fields. The horizontal sync pulses (H syncs) and a detail of the vertical interval are shown on the next page. Note that during the vertical interval, the leading edges of sync appear at a 2H rate (~ every 32μ) for the equivalent of 9 lines. This description applies strictly to the NTSC system; however, the principles of the other common systems are similar.

Three variations of the comp video signal are usually poisonous to sync extracting systems:

A. Sound-in-syncs

In this system the audio content associated with each line is digitally sampled and the resulting word is encoded <u>during the sync pulse!</u> Thus instead of a sync pulse like this:

one gets:

Only a leading and trailing edge of sync pulse of about 140 ns each is assured; the digital bits can take any value between sync tip and white.

B. Helical Scan Video Tape Recorders

For a period of ~ 20 lines the comp video output simply collapses to the blanking level.

$\frac{20}{525}$ - $\frac{1}{25}$ of 16 kHz = 800 Hz

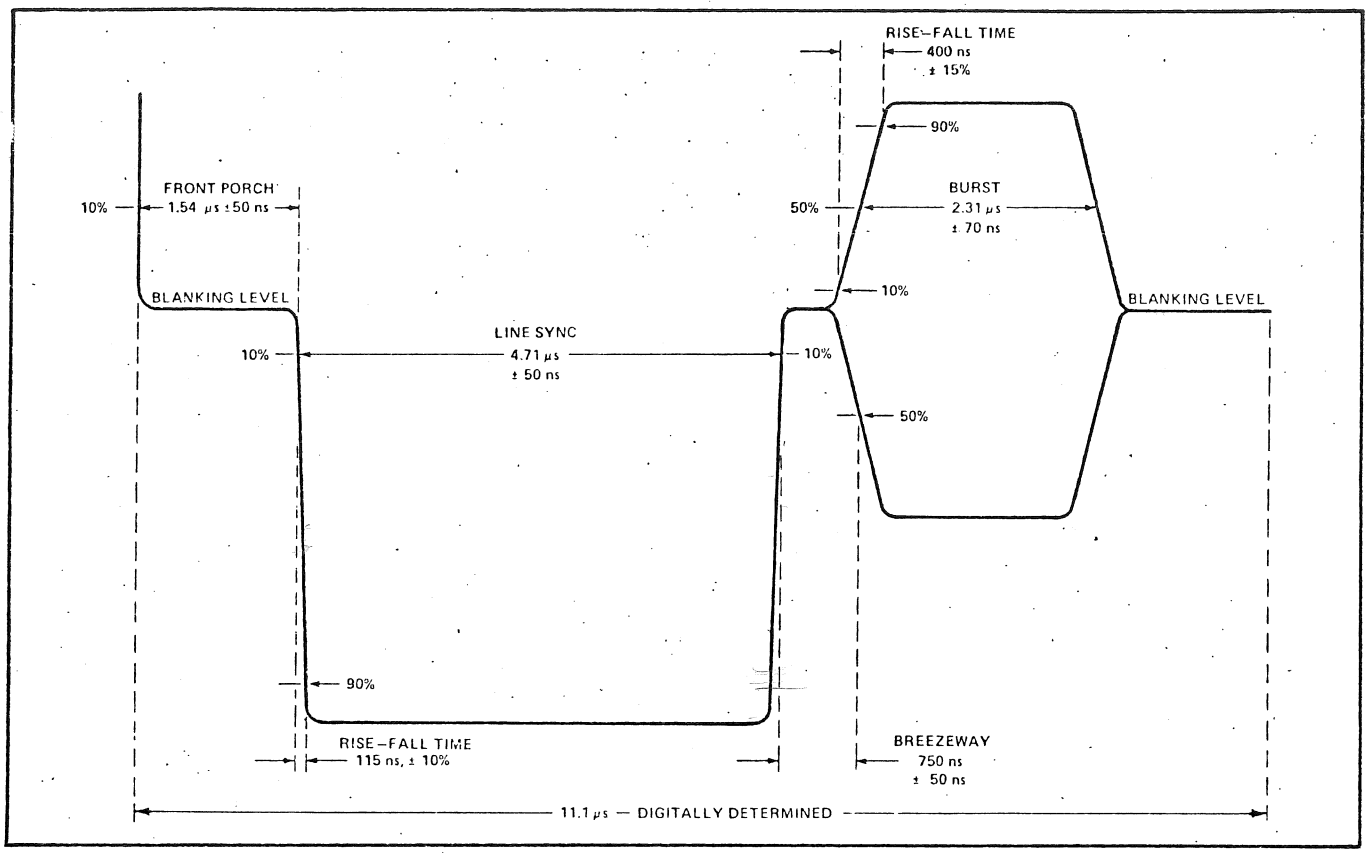

Fig. 1-2. Comp Video horizontal blanking details.

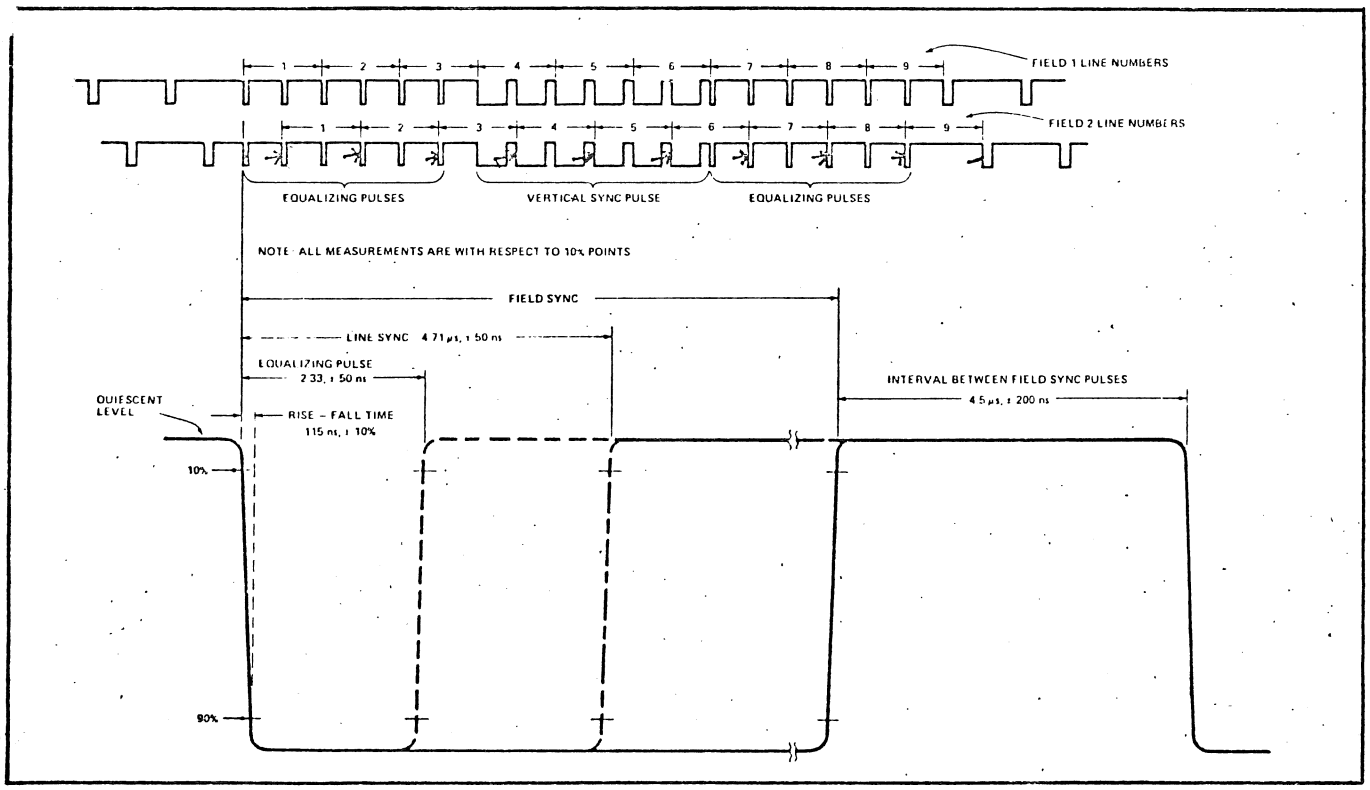

Fig. 1-3. Comp Sync blanking details.

C. Video switchers
Such systems can switch between missmatched sources possessing blanking levels which differ by as much as 1 1/2 sync pulse heights.

Role of the Sync Strip Circuit

This circuit must generate an output pulse whose leading edge faithfully reproduces the timing of the 50% point on the leading edge of the sync pulses contained in the input comp video waveform. In addition to the variations of the input signal described above, input signal degradations include noise (white and impulse), hum, and varying signal amplitude.

Theory of Operation (see block diagram)

The composite video waveform is AC coupled as an input current into the AGC amp. The inverted output of this amp is then presented to a digital system which forces the following conditions at the test point:

- The back porch is DC restored to V_{BP} volts by adjustment of the DC input of the AGC amp.
- The sync tip is set to $(V_{BP}+1.0)$ volts by adjustment of the gain of the AGC amp.
- The sync output is picked off at the $(V_{BP}+0.5)$ volt level; that is, at the middle of the sync pulse.

How the digital system achieves these ends will be the topic of the next section. Normal operation will be considered first, where it is assumed that a standard signal appears at the input and the circuit has reached equilibrium. Non-equilibrium and abnormal inputs will be considered later.

Normal Equilibrium Operation

By assumption, an inverted comp video voltage exists at the test point with the following features:

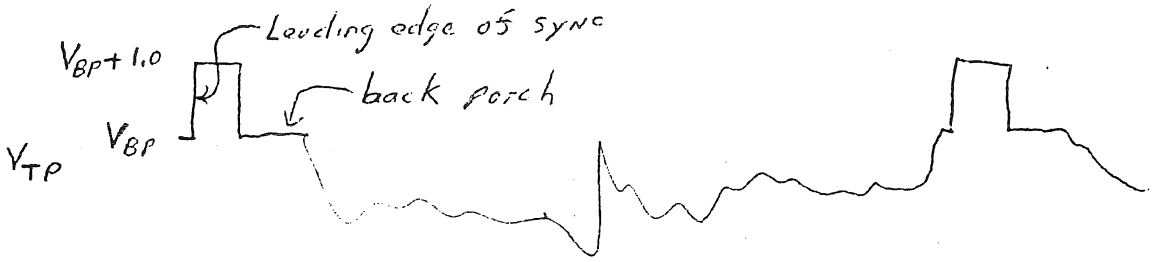

As the leading edge of sync passes the (V_{BP}+.75) volt level, the Pulse generator is triggered; further, assuming the output of the Timing Cycle Generator, V_{TC}, exceeds V_D, then the retrigger enable detector will provide a trigger enable pulse to the Pulse generator; thus a set pulse is delivered to the flip-flop, changing its state. This state change initiates a timing cycle rundown from V_A to V_B at a rate determined by I_1. When V_{TC} falls below V_D, the output of the Pulse generator is inhibited. V_B is reached after $\sim$5us, tripping the Invert Ramp Detector which resets the flip-flop. The flip-flop output initiates the run up from V_B to V_C at a rate determined by I_1.

The combination of the flip-flop output with the mid-cycle detector output yields a gate pulse occuring during the back porch and $\sim$ 2.5 us wide. This signal gates the Back Porch detector, which forces the DC operating point of the AGC amp to be such that $v_{TP} = V_{BP}$ during the back porch. The middle of sync detector inhibits the taking of incorrect samples during the vertical sync pulses.

When the mid-cycle detector observes that $v_{TC} \geq V_C$, it switches the charging rate to I_2. When $v_{TC}=V_D$ some 50 ns later, the Retrigger Enable Detector enables the Pulse generator for the next trigger.

The Sync Tip Detector is self-enabled at (V_{BP}+.75) volts. It then forces the gain of the AGC amp to be such that $v_{TP}=V_{BP}+1.0$ whenever $v_{TP}>V_{BP}+.75$. This feedback path is very slow due to C_{AGC}, and requires several fields to reach equilibrium; in contrast, the DC feedback achieves its ends in a few lines.

The Middle-of-sync Detector operates the output switch, and thus generates the output sync, correctly picked off at the 50% point of the input sync pulse.

Normal Input, Non Equilibrium Conditions

Consider initially the case of no input; under this condition, ν_{TC} will run out to V_A, where it is caught. The Timing Cycle Overrun Detector will then open the gate of the Back Porch Detector, setting ν_{TP} to V_{BP}; it will also adjust V_{AGC} to increase the gain of the AGC amp. Equilibrium will be reached when the gain attains its maximum value. The output switch will indicate no sync as $\nu_{TP}<(V_{BP}+.5)$.

When an input signal is provided, the first positive excursion above $V_{BP}+.75$ of ν_{TP} will start the timing cycle and initiate a sample by the Back Porch Detector, as previously described. If the first trigger is the correct one (a leading edge of sync) then it is clear that the system will settle in a simple manner to the normal equilibrium condition; however, if the first trigger occurred elsewhere (possibly at a step in the video portion of the line) the chain of events is more complex. Regardless of what test waveform is proposed, an auxiliary system exists to force convergence to the normal equilibrium. This auxiliary system is comprised of the Excess Sync Height Detector, which adjusts the DC input of the AGC amplifier to keep $\nu_{TP}<V_{BP}+1.5$ and the Excess Ratio of Sync to Video Detector, which increases the gain if ν_{TP} exceeds $(V_{BP}+.5)$ on an averaged basis for more of the time than the known proportion of comp video.

The log-linear relationship between V_{AGC} and AGC amp gain was arranged to ensure a similar response time to equilibrium conditions for equal db changes in V_{IN}, regardless of the previous value of V_{IN}.

THE AGC AMPLIFIER

Figure 1 shows a slightly simplified form of the AGC amp used in the M124A. Assume initially that V_{DC} is fixed such that $I_{IN} \simeq I_A/2$. The amplifier is comprised of two cascoded gain cells, Q1 through Q4 and Q5 through Q8. Treating Q12 as a cascode for the upper gain cell, it is straightforward to show that

$$A_I = i_{OUT}/i_{IN} \simeq \left(\frac{ID}{IA}\right) (I_B/I_C),$$ where the shunting of the R_B's

is ignored and $\alpha = 1$ is assumed. The diff amp, Q9 - Q10, gives a transfer function of

$$I_C/I_B = EXP(V_{AGC}/V_t)$$

Combining these two relationships and reformulating in decibel notation yields

$$A_{IdB} = 20 \log_{10} (I_D/I_A) - 8.69 (V_{AGC}/V_t).$$

At room temperature, the slope of the gain vs. V_{AGC} curve is $\sim$ 3mV/dB. This log-linear relationship is desirable, as it ensures an equal settling time from similar dB input amplitude changes, regardless of the gain prevailing at the moment of the amplitude change.

Consider next the DC conditions within the amplifier. As previously mentioned, Q12 cascodes the output of the upper gain cell; in addition, for slow changes in V_{DC}, Q12 operates as an emitter follower, moving V_{LF} and thus I_{IN}; finally, for fast changes in V_{DC}, Q12 acts as a common emitter amp where

$$V_{OUT}/V_{DC} \simeq R_{OUT}/R_1$$

Note that A_I is independent of I_{IN}, and thus of V_{DC}, except during rapid

changes in V_{DC} . Q_{11} is provided to hold the V_{CB} of Q_5 low, and thus minimize the thermal distortion in the upper gain cell. Finally consider the dc voltages V_{B1} and V_{B2} .

$$V_{B1} = V_{B2} \simeq V_{cc} - R_B I_E/2$$

Thus as V_{AGC} changes, the dc potentials within the circuit are unchanged. This independence of gain on V_{DC} and dc conditions on V_{AGC} simplifies the design of the control signals.

The main schematic indicates the addition of emitter follows Q5 and Q6 and their bleed resistors in order to increase the maximum gain of the upper cell. The darlington follower Q25 - Q26 feeding the diff amp input is used to buffer the voltage across C_{AGC} and reduce the gain control sensitivity to 15 mv./db. Q18 - Q19 provide a reference potential so that the majority of the dc component of the AGC voltage can be cancelled; thus a differential output can be taken between pins 2 and 3 which closely represents V_{AGC}.

The remaining circuitry is generally of a conventional nature, and follows from an implementation of the elements of the block diagram.

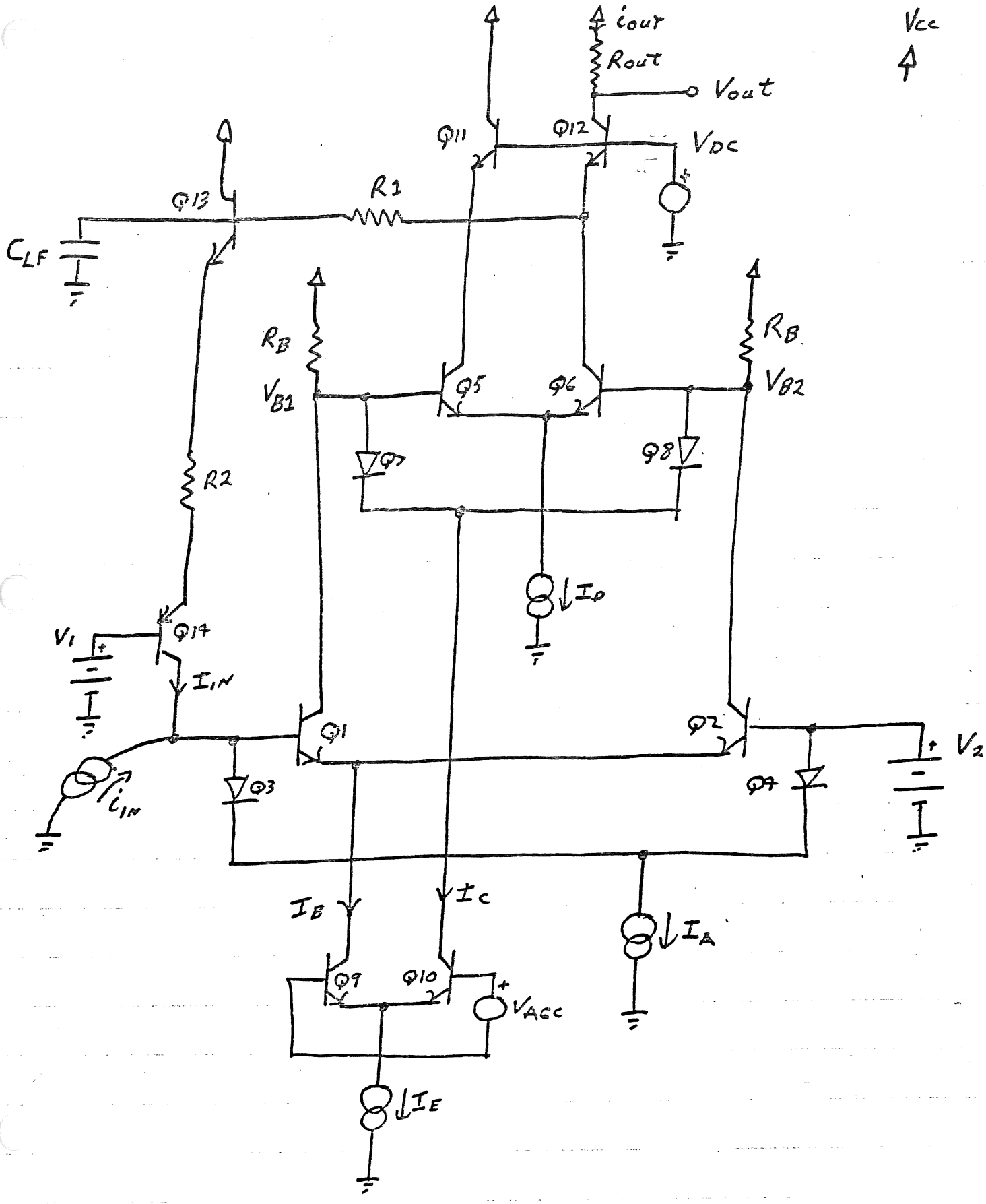

Fig. 1 Simplified Schematic of the AGC amplifier

PINOUT M124

Oct 29/75

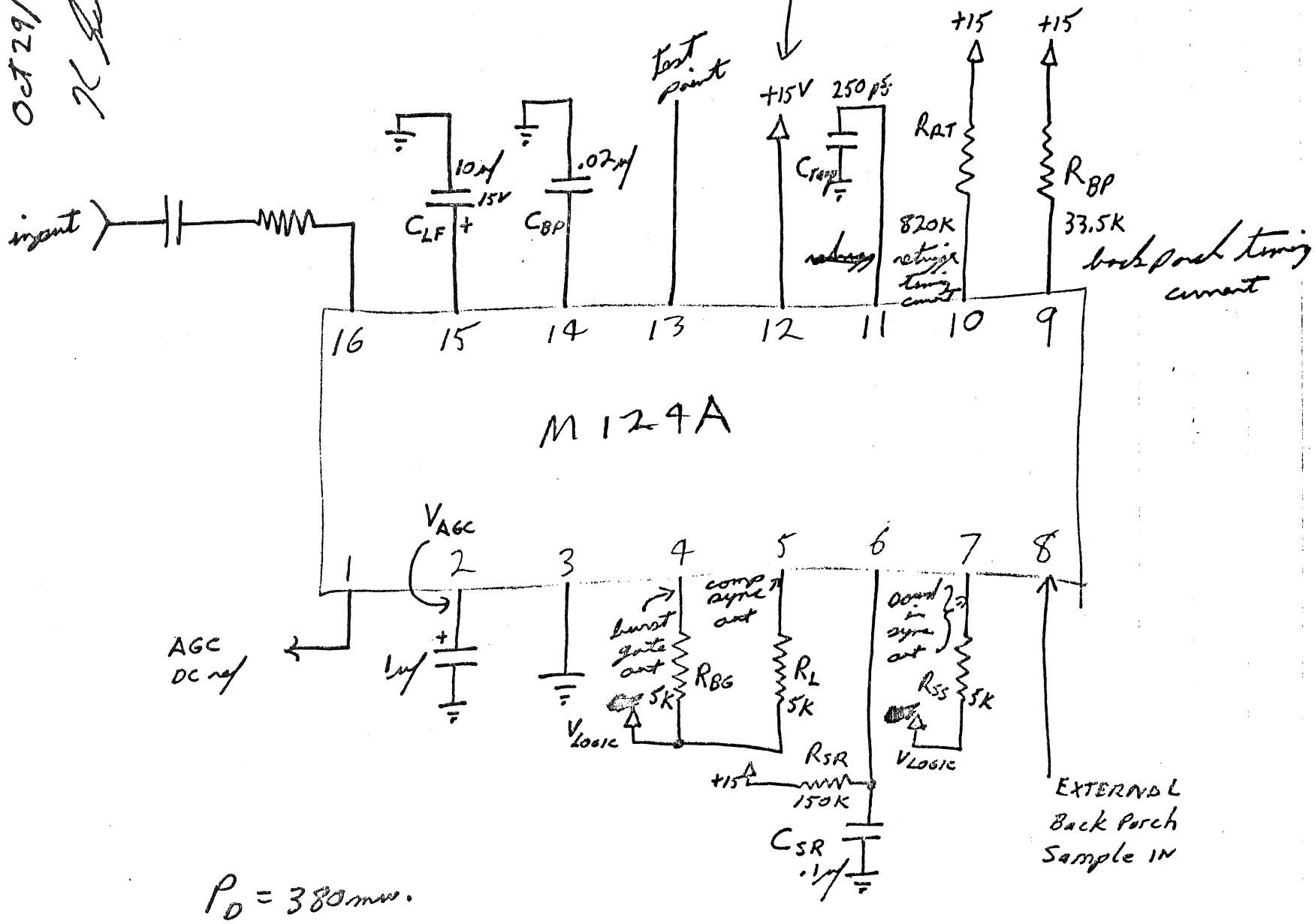

$P_D = 380$ mw.

M124A
155-0144-00

Package Outline
Connection Diagram
16 Lead Dual In Line
Top View

3.58 MHz NTSC
4.43 MHz

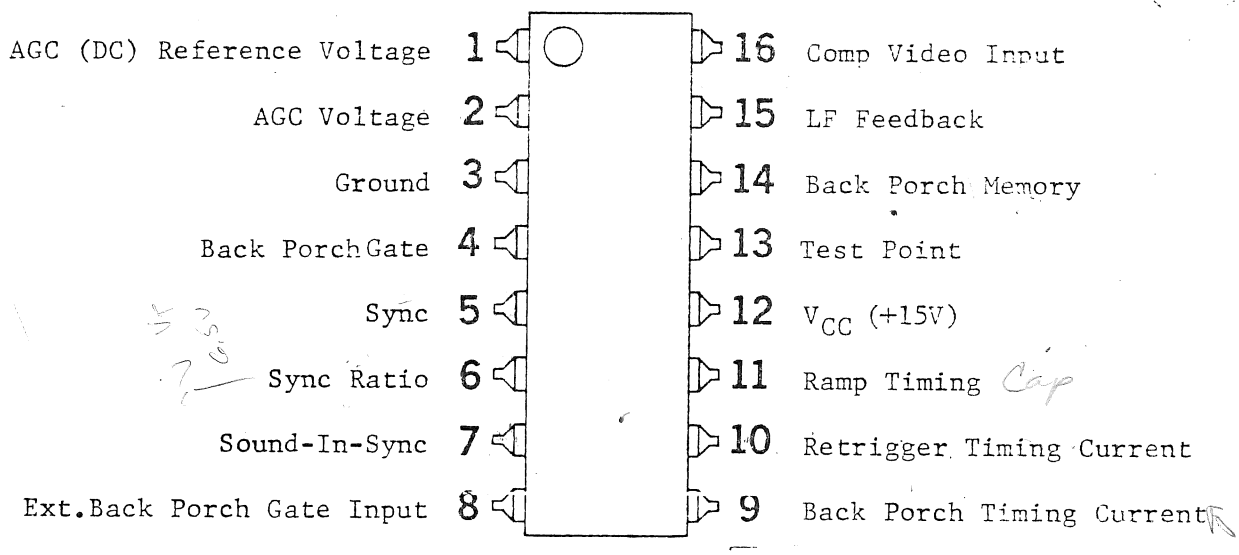

70

Need: Performance Curve -
Circuit Schematic -
Application Note - Figure 1 - M124A
Figure 2 - done

SYNC STRIP CIRCUIT

60
12
120
60
720

TEKTRONIX, INC. BEAVERTON, OREGON	SHT 1 OF	CODE IDENT NO 80009	SIZE A	PART NUMBER 155-0144-00	REV

000 7243 00D

DO NOT SCALE DRAWING

M124A

GENERAL DESCRIPTION

The P124A is a Monolithic Sync Strip circuit for use in a wide variety of T.V. related products.

FEATURES

Open Collector Outputs-"Comp Sync","Sound-In-Sync" and "Back Porch Gate".

AGC is based upon input Sync amplitude. A "Test Point" is available with inverted Comp Video referenced to 0.8 volt Sync amplitude.

Wide Input Dynamic Range with leading Sync Edge Timing preserved.

Provides a Block Sync Output to be used with"Sound-In-Sync" Video Input.

Provides a"Back Porch Gate" suitable for Video Clamping Amplifiers.

Internal Timing, adjustable by External Components to accommodate different Line rates, creates a window for the acceptance of Sync Inputs(this minimizes sensitivity to Noise Bursts).
The Gain of the Input Amplifier(and thus the amplitude of the Input Sync) can be determined by the DC voltage between the"AGC Voltage" and"AGC Reference Voltage"Pins.

ABSOLUTE MAXIMUM RATINGS*

Input Current (Pin 16)	± 2 mA
V_{CC} (Pin 12)	+ 16 Volts
Back Porch Gate Input(Pin 4)	- 4 mA
Output Voltage(Pins 4,5,7)	+10 Volts
Maximum Operating Temperature (Results in a 125°C Junction Temp.)	80°C
Power Dissipation (operating)	400 mW

THIS SPEC HAS NOT BEEN SIGNED OR VERIFIED AND IS NOT TO BE USED FOR DESIGNING

*ABSOLUTE MAXIMUM RATINGS are those ratings beyond which the serviceability of the device may be impaired.

P124A (155-0144-00)

PRODUCT SPECIFICATION SUMMARY

THIS SPEC HAS NOT BEEN SIGNED OR VERIFIED & IS NOT TO BE USED FOR PRODUCTION

PARAMETER	SYMBOL	MIN	MAX	UNITS
Test Point Voltage (Pin 13)	V_{TP}	11.0	13.0	(NOTE 1) VOLTS
Sync Out Voltage (Pin 5)	V_{SY}	4.9	5.1	(NOTE 1) VOLTS
Back Porch Gate Out Voltage (Pin 4)	V_{BP}	4.9	5.1	(NOTE 1) VOLTS
Sound In Syncs Out Voltage (Pin 7)	V_{SS}	4.9	5.1	(NOTE 1) VOLTS
Ramp Timing Voltage (Pin 11)	V_{RP}	13.6	14.6	(NOTE 1) VOLTS
AGC Voltage (Pin 2)	V_{AGC}	1.8	2.6	(NOTE 1) VOLTS
AGC Reference Voltage (Pin 1)	V_{REF}	3.3	3.9	(NOTE 1) VOLTS
Sync Ratio Voltage (Pin 6)	V_{SR}	12.0	14.0	(NOTE 1) VOLTS
Back Porch Gate In Voltage (Pin 8)	$V_{BP(In)}$	9.5	11.5	(NOTE 1) VOLTS
Input Voltage (Pin 16)	V_{IN}	1.8	2.4	(NOTE 1) VOLTS
LF Feedback Voltage (Pin 15)	V_{LF}	7.0	9.0	(NOTE 1) VOLTS
Back Porch Memory Voltage (Pin 14)	V_{MEM}	8.0	10.0	(NOTE 1) VOLTS
Retrigger Input Voltage (Pin 10)	V_{RT}	0.6	0.8	(NOTE 1) VOLTS
Back Porch Timing Voltage (Pin 9)	V_{BPT}	0.8	1.4	(NOTE 1) VOLTS

COMPANY CONFIDENTIAL

P124A (155-0144-00)

PRODUCT SPECIFICATION SUMMARY

PARAMETER	SYMBOL	MIN	MAX	UNITS
Input to Output Delay (V_{gen} to Pin 5) (NOTE#2) (Figure #2)	T_{IO}	120 (Typ)		nSEC
Output Logic Zero Levels (Pins 4,5,7) (Figure #2)	$V_{L\emptyset}$	300 (Typ)	750	mVOLTS
Trailing Edge of Test Point Pulse to Leading Edge of Back Porch Gate Output Pulse (Pin 13 to Pin 4) (Figure #2)	T_X	100	250	nSEC

COMPANY CONFIDENTIAL

THIS SPEC HAS NOT BEEN SIGNED UP VERIFIED & IS NOT TO BE USED FOR PRODUCTION

TEKTRONIX, INC. BEAVERTON, OREGON	SHT 4 OF	CODE IDENT NO 80009	SIZE A	PART NUMBER 155-0144-00	REV

000 7243 00D

DO NOT SCALE DRAWING

Product Spec Summary (Note Section)

All product specifications refer to Test Circuit depicted in Figure #1., with 525/60 or 625/50 Composite Video TV Waveform as Input.(V_{gen}).

NOTE 1. V_{gen} = 0 Volts

2. V_{gen} = 286 mVOLTS of Horizontal Sync, Timing measurements between 50% points.

THIS SPEC HAS NOT BEEN SIGNED OR VERIFIED & IS NOT TO BE USED FOR PROCESSING

SYNC STRIP CIRCUIT

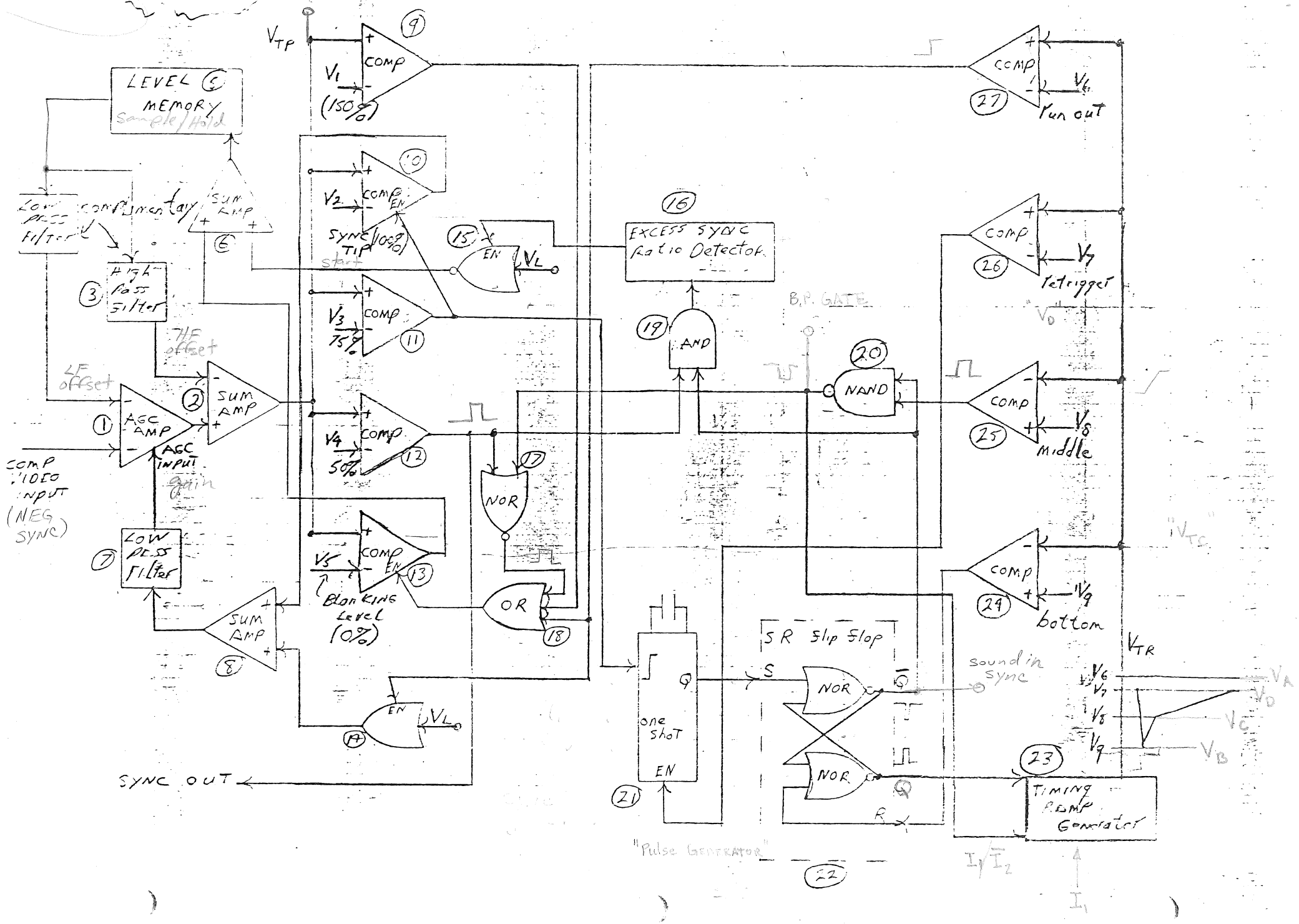

APPLICATION NOTE

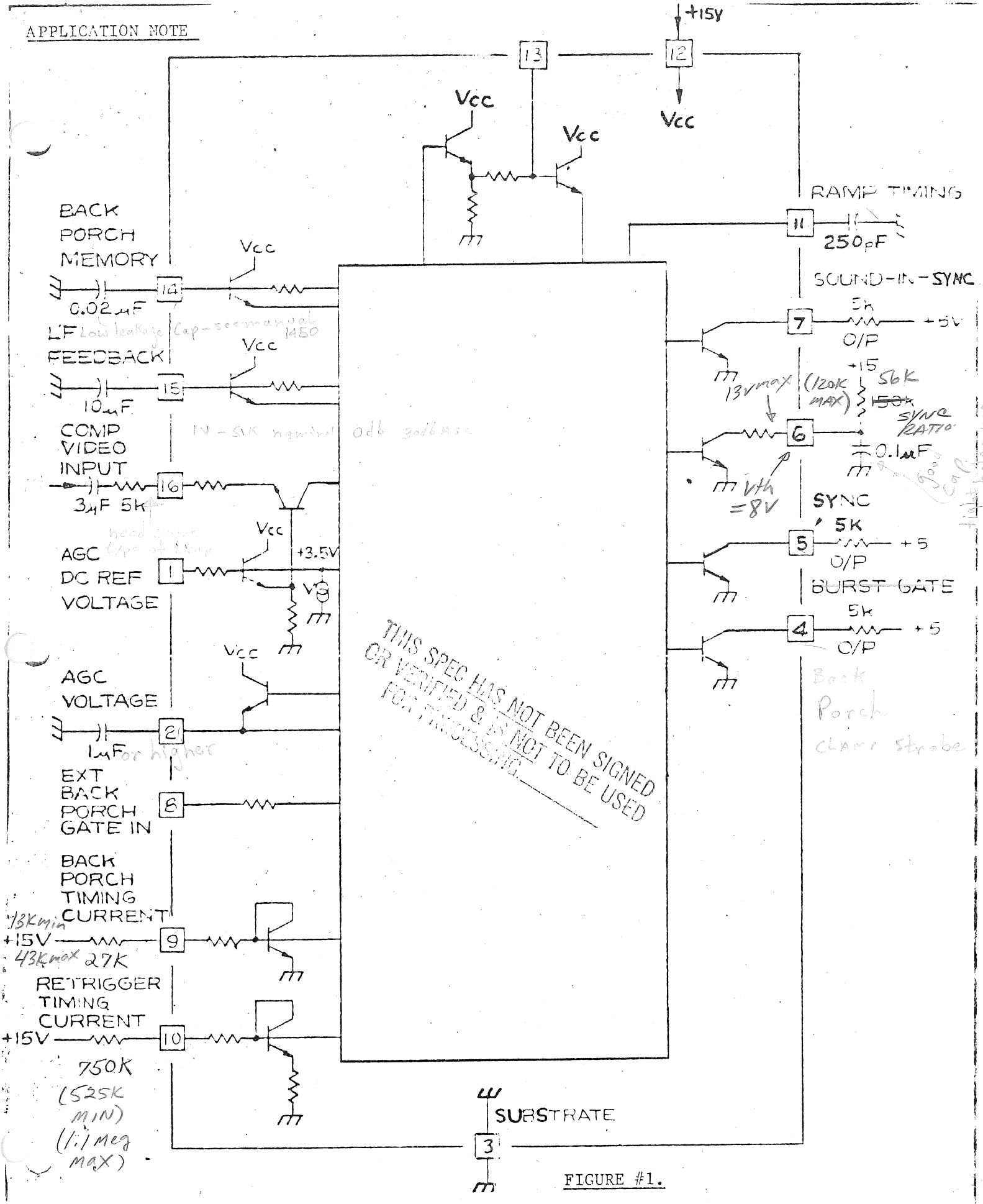

FIGURE #1.

TEKTRONIX, INC. BEAVERTON, OREGON	SHT 5 OF	CODE IDENT NO 80009	SIZE A	PART NUMBER 155-0144-00	REV

000 7243 00D

DO NOT SCALE DRAWING

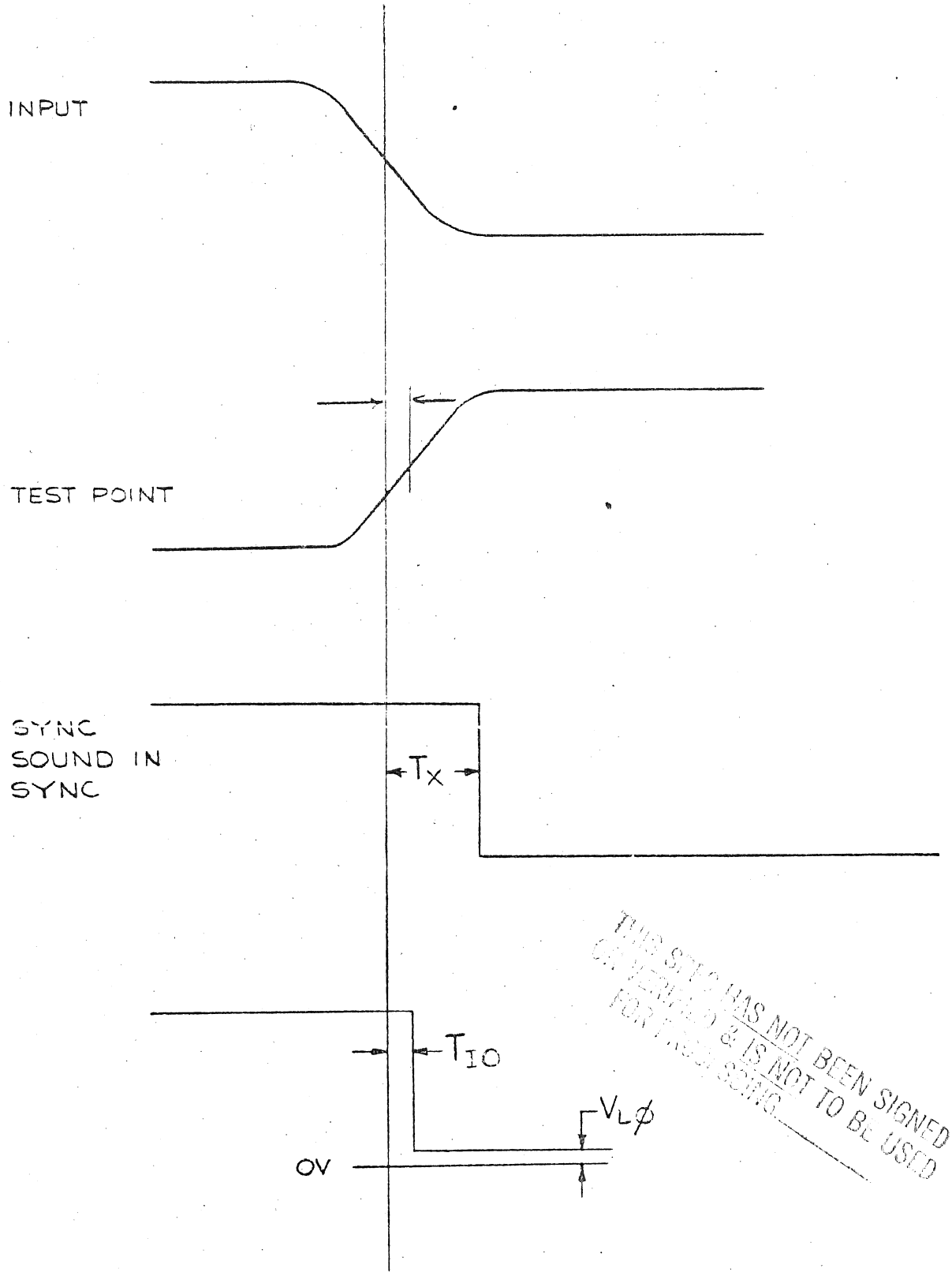

THIS STAMP HAS NOT BEEN SIGNED OR VERIFIED & IS NOT TO BE USED FOR FINAL SCHG.

FIGURE # 2

TEKTRONIX, INC. BEAVERTON, OREGON	SHT 6 OF	CODE IDENT NO 80009	SIZE A	PART NUMBER 155-0144-00	REV

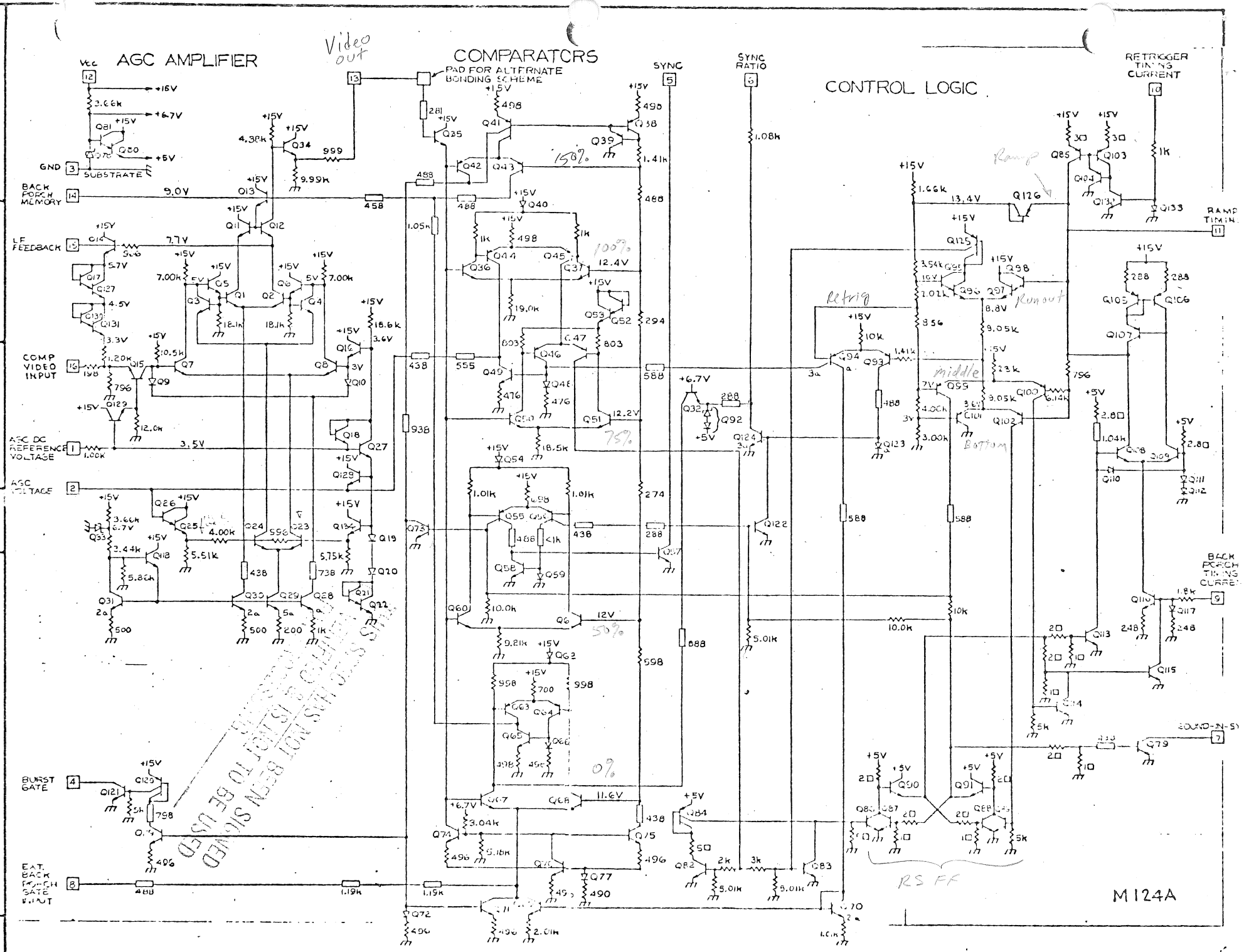

TEKTRONIX, INC.
BEAVERTON, OREGON

SHT 7 OF

CODE IDENT NO. 80009

SIZE A

PART NUMBER 155-0144-00

REV

DO NOT SCALE DRAWING

THIS DRAWING HAS NOT BEEN SIGNED AND IS NOT TO BE USED

GRAPHIC PERFORMANCE CURVES

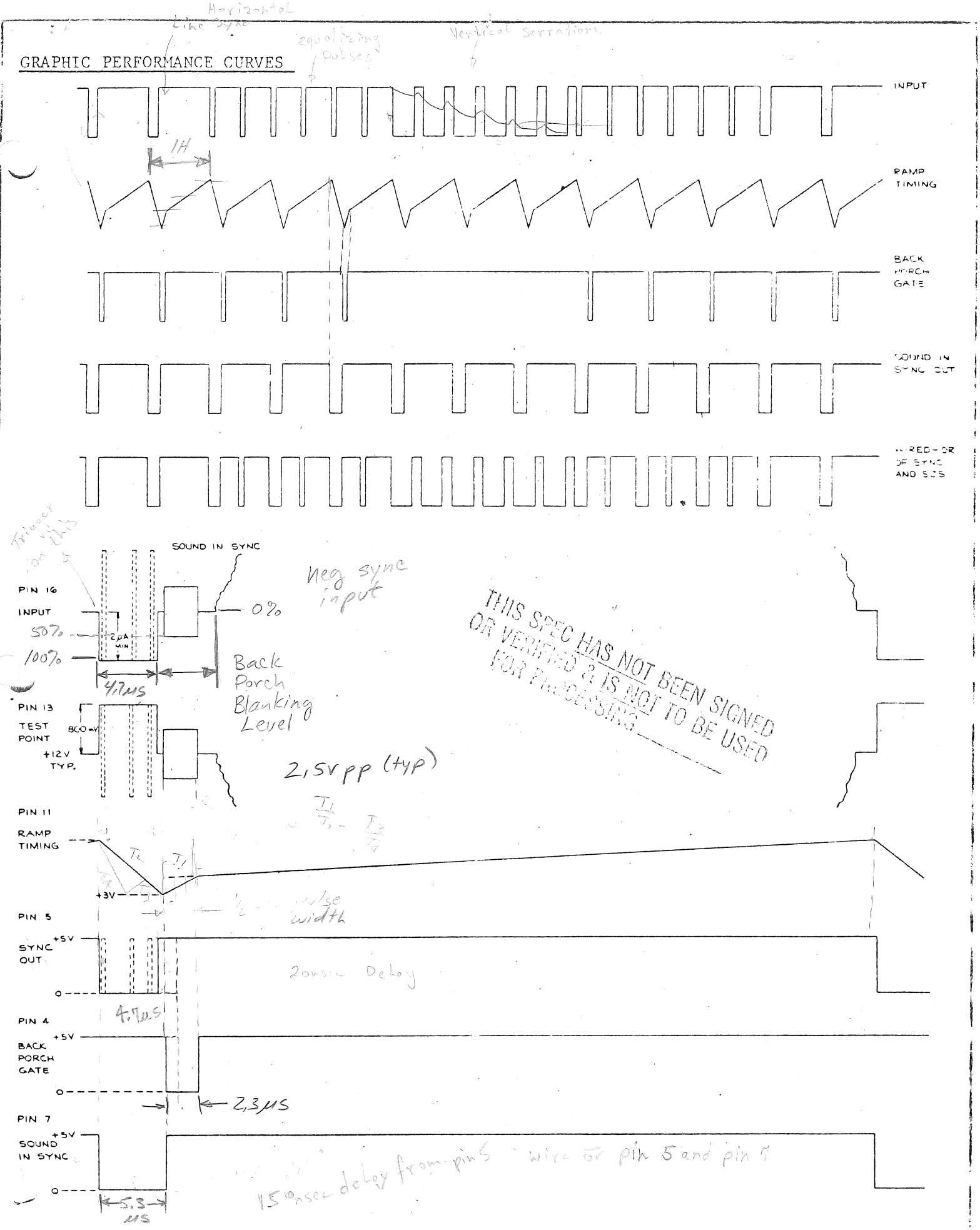

THIS SPEC HAS NOT BEEN SIGNED OR VERIFIED & IS NOT TO BE USED FOR PROCESSING

TEKTRONIX, INC. BEAVERTON, OREGON	SHT 8 OF	CODE IDENT NO 80009	SIZE A	PART NUMBER 155-0144-00	REV

DO NOT SCALE DRAWING

OUTLINE DRAWING.

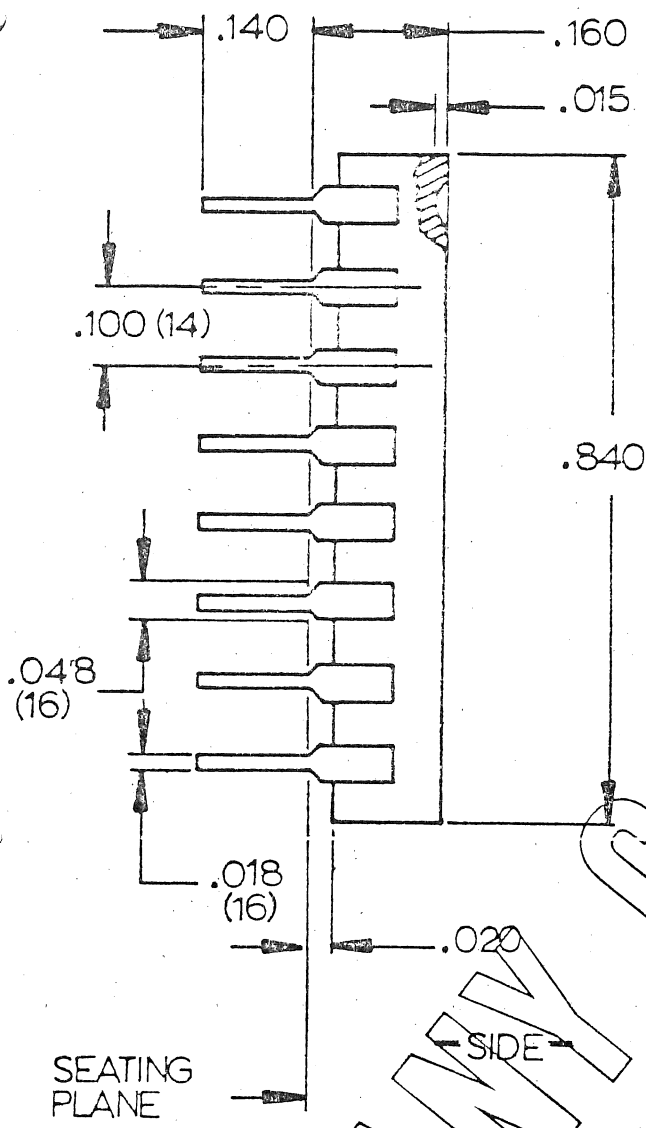

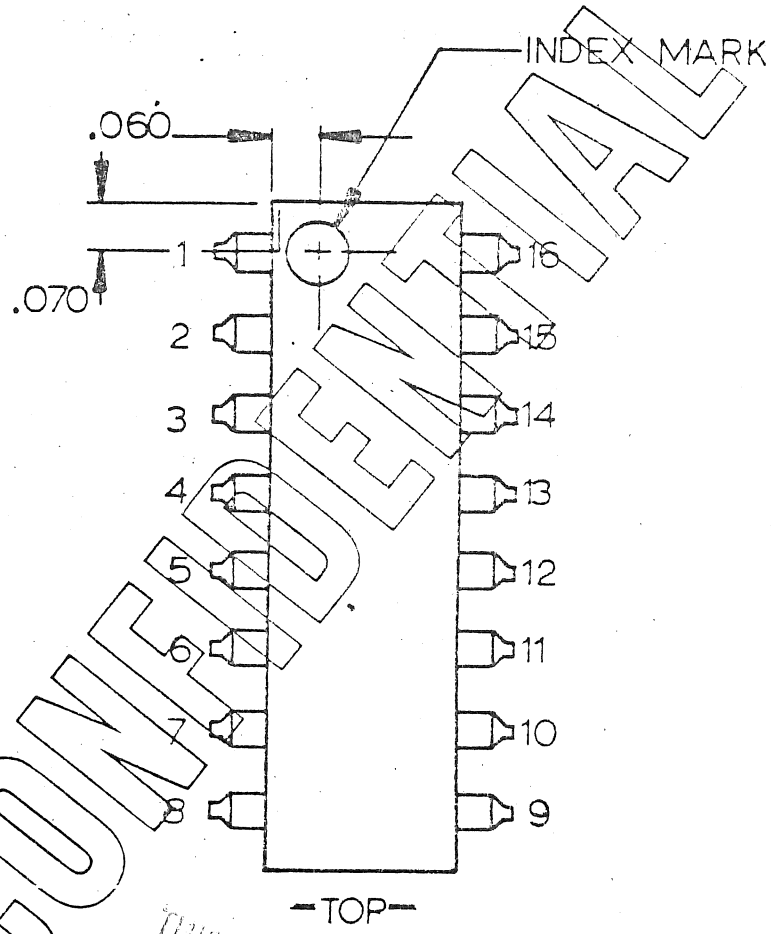

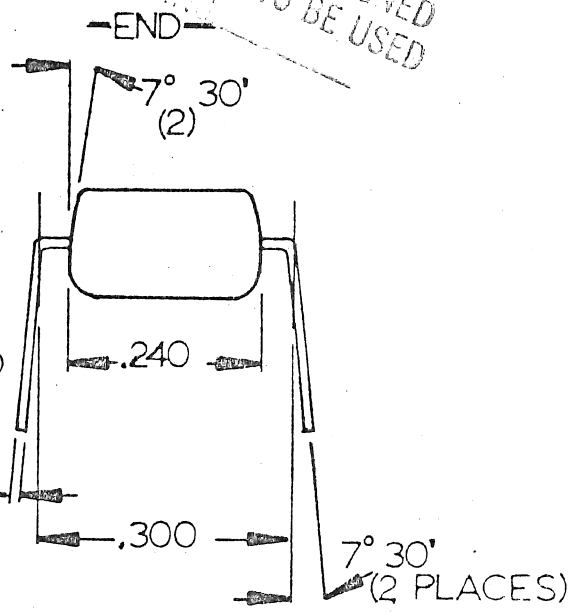

COMPANY CONFIDENTIAL

THIS SPEC HAS NOT BEEN SIGNED
OR VERIFIED AND IS NOT TO BE USED
FOR PRODUCTION

PACKAGE DATA

Package Material: HYSOL

Metal Frame: Cu-Clad (Pin 3 is Substrate)

Thermal Impedance: 107.4°C/Watt(Junction to Ambient)

NOTE: The data on this page does not constitute a specification but is intended for reference only.

Package Drawing: 155-0000-00

TEKTRONIX, INC. BEAVERTON, OREGON	SHT 2 OF	CODE IDENT NO 80009	SIZE A	PART NUMBER 155-0144-00	REV

000 7243 00D

DO NOT SCALE DRAWING

SPECIFICATIONS AND DOCUMENTATION CHANGE NOTICE

NO. 182

DATE 6-10-76

SPECIFICATION CHANGED: 155-0144-00 M124A

ORIGINATOR: Ken Schlotzhauer

DESCRIPTION OF CHANGE: Initial Documentation

REASON FOR CHANGE:

DISTRIBUTE:

Ken Schlotzhauer
Joe McGrady
ICM Master Log

TO BE APPROVED BY	SIGNATURE	DATE
Ken Schlotzhauer	[illegible]	6/23/76
Chuck Gold	[illegible]	6/23/76
Carl Brown	C. D. Brown	6/23/76
Bob Poulin	Bob Poulin	6/23/76
Bill Quinn	Bill Quinn	6-23-76

TEKTRONIX, INC.

IC DOCUMENTATION

REV	REF	DESCRIPTION OF CHANGE	CHK BY	DATE
		Original		6-10-76

REV OR

PART NUMBER 155-0144-00

PACKAGE OUTLINE CONNECTION DIAGRAM
16 LEAD DUAL-IN-LINE
TOP VIEW

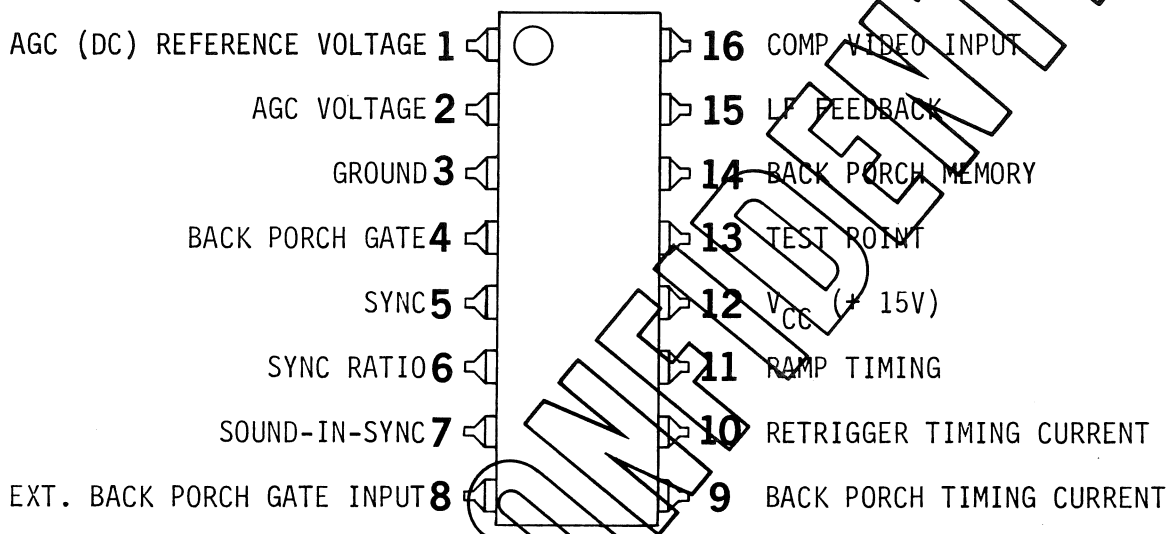

CONFIDENTIAL

MANUFACTURER	CODE IDENT NO	MANUFACTURER'S PART NUMBER
Tektronix, Inc.	P124A	155-0144-00

THIS DRAWING WHEN DISTRIBUTED OUTSIDE TEKTRONIX, INC. IS SUPPLIED FOR IDENTIFICATION, ENGINEERING EVALUATION AND/OR INSPECTION PURPOSES ONLY AND MAY NOT BE USED AS A BASIS FOR MANUFACTURE OR SALES OF PRODUCTS WITHOUT WRITTEN PERMISSION FROM TEKTRONIX, INC.

IF THIS DRAWING IS FURNISHED UNDER ANY U.S. GOVERNMENT CONTRACT, IT IS FURNISHED AS LIMITED RIGHTS DATA AND SHALL NOT, WITHOUT THE WRITTEN PERMISSION OF TEKTRONIX, INC., BE EITHER (A) USED, RELEASED, OR DISCLOSED IN WHOLE OR IN PART OUTSIDE THE GOVERNMENT, (B) USED IN WHOLE OR IN PART BY THE GOVERNMENT FOR MANUFACTURE OR (C) USED BY A PARTY OTHER THAN THE GOVERNMENT, EXCEPT FOR: (I) EMERGENCY REPAIR OR OVERHAUL WORK ONLY, BY OR FOR THE GOVERNMENT, WHERE THE ITEM OR PROCESS CONCERNED IS NOT OTHERWISE REASONABLY AVAILABLE TO ENABLE TIMELY PERFORMANCE OF THE WORK, PROVIDED THAT THE RELEASE OR DISCLOSURE HEREOF OUTSIDE THE GOVERNMENT SHALL BE MADE SUBJECT TO A PROHIBITION AGAINST FURTHER USE, RELEASE, OR DISCLOSURE; OR (II) RELEASE TO A FOREIGN GOVERNMENT, AS THE INTEREST OF THE UNITED STATES MAY REQUIRE, ONLY FOR INFORMATION OR EVALUATION WITHIN SUCH GOVERNMENT OR FOR EMERGENCY REPAIR OR OVERHAUL WORK BY OR FOR SUCH GOVERNMENT UNDER THE CONDITIONS OF ABOVE. THIS LEGEND SHALL BE INCLUDED ON ANY REPRODUCTION HEREOF.

- ☐ MANUFACTURED TO TEK, INC. SPEC.
- ☒ TEKTRONIX, INC. ITEM DRAWING
- ☐ SPECIFICATION CONTROL DRAWING
- ☐ ALTERED ITEM DRAWING
- ☐ SELECTED ITEM DRAWING
- ☐ SOURCE CONTROL DRAWING

TEKTRONIX, INC.
P. O. BOX 500
BEAVERTON, OREGON U.S.A. 97077

DWN		DIMENSIONS ARE IN INCHES / MM TOLERANCES: UNLESS OTHERWISE SPECIFIED	
ENGR		DEC	ANLR
CHKR			
PROD		SCALE	FIRST USED ON

MATERIAL

FINISH

TITLE
SYNC STRIP CIRCUIT

182	SH 1 OF 9	CODE IDENT NO 80009	SIZE A	PART NUMBER 155-0144-00	REV OR

000-7242-00 D

DO NOT SCALE DRAWING

1 GENERAL DESCRIPTION

The P124A ia a Monolithic Sync Strip circuit for use in a wide variety of television related products.

2 FEATURES

2.1 Open Collector Outputs: Comp Sync, Sound-In-Sync, and Back Porch Gate.

2.2 AGC is based upon input Sync amplitude. A "test point" is available with inverted Comp Video reference to 0.8 volt Sync amplitude.

2.3 Wide Input Dynamic Range with leading Sync Edge Timing preserved.

2.4 Provides a Block Sync Output to be used with Sound-In-Sync video input.

2.5 Provides a Back Porch Gate suitable for video clamping amplifiers.

2.6 Internal Timing, adjustable by eternal components to accommodate different line rates, creates a window for the acceptance of Sync inputs. (This minimizes sensitivity to noise bursts).

2.7 The Gain of the Input Amplifier (and thus the amplitude of the Input Sync) can be determined between the AGC Voltage and the AGC Reference Voltage Pins.

3 ABSOLUTE MAXIMUM RATINGS*

3.1	Input Current (Pin 16)	± 2 mA
3.2	V_{CC} (Pin 12).	+ 16 Volts
3.3	Back Porch Gate Input (Pin 4)	-4 mA
3.4	Output Voltage (Pins 4, 5, 7)	+ 10 Volts
3.5	Maximum Operating Temperature . . . . . (Results in a 125°C Junction Temperature)	80°C
3.6	Power Dissipation	400 mW

*Absolute Maximum Ratings are those ratings beyond which the serviceability of the device may be impaired.

COMPANY CONFIDENTIAL

P124A

PRODUCT SPECIFICATION SUMMARY

PARAMETER	SYMBOL	MIN	MAX	UNITS
Test Point Voltage (Pin 13)	V_{TP}	11.0	13.0	Volts (NOTE 1)
Sync Out Voltage (Pin 5)	V_{SY}	4.9	5.1	Volts (NOTE 1)
Back Porch Gate Out Voltage (Pin 4)	V_{BP}	4.9	5.1	Volts (NOTE 1)
Sound In Syncs Out Voltage (Pin 7)	V_{SS}	4.9	5.1	Volts (NOTE 1)
Ramp Timing Voltage (Pin 11)	V_{RP}	13.6	14.6	Volts (NOTE 1)
AGC Voltage (Pin 2)	V_{AGC}	1.8	2.6	Volts (NOTE 1)
AGC Reference Voltage (Pin 1)	V_{REF}	3.3	3.9	Volts (NOTE 1)
Sync Ratio Voltage (Pin 6)	V_{SR}	12.0	14.0	Volts (NOTE 1)
Back Porch Gate In Voltage (Pin 8)	$V_{BP(In)}$	9.5	11.5	Volts (NOTE 1)
Input Voltage (Pin 16)	V_{IN}	1.8	2.4	Volts (NOTE 1)
LF Feedback Voltage (Pin 15)	V_{LF}	7.0	9.0	Volts (NOTE 1)
Back Porch Memory Voltage (Pin 14)	V_{MEM}	8.0	10.0	Volts (NOTE 1)
Retrigger Input Voltage (Pin 10)	V_{RT}	0.6	0.8	Volts (NOTE 1)
Back Porch Timing Voltage (Pin 9)	V_{BPT}	0.8	1.4	Volts (NOTE 1)

COMPANY CONFIDENTIAL

P124A

PRODUCT SPECIFICATION SUMMARY

PARAMETER	SYMBOL	MIN	MAX	UNITS
Input to Output Delay (V_{gen} to Pin 5) (Figure 2)	T_{10}	120 (TYP)		nSec (NOTE 2)
Output Logic Zero Levels (Pins 4, 5, 7) (Figure 2)	$V_{LØ}$	300 (TYP)	750	mVolts
Trailing Edge of Test Point Pulse to Leading Edge of Back Porch Gate Output Pulse (Pin 13 to Pin 4) (Figure 2)	T_X	100	250	nSEC

NOTE SECTION

All product specifications refer to Test Circuit depicted in Figure 1 with 525/60 or 625/50 Composite Video TV Waveform as Input (V_{gen}).

NOTE 1: V_{gen} = 0 Volts

NOTE 2: V_{gen} = 286 mVolts of Horizontal Sync, timing measurements between 50% points.

COMPANY CONFIDENTIAL

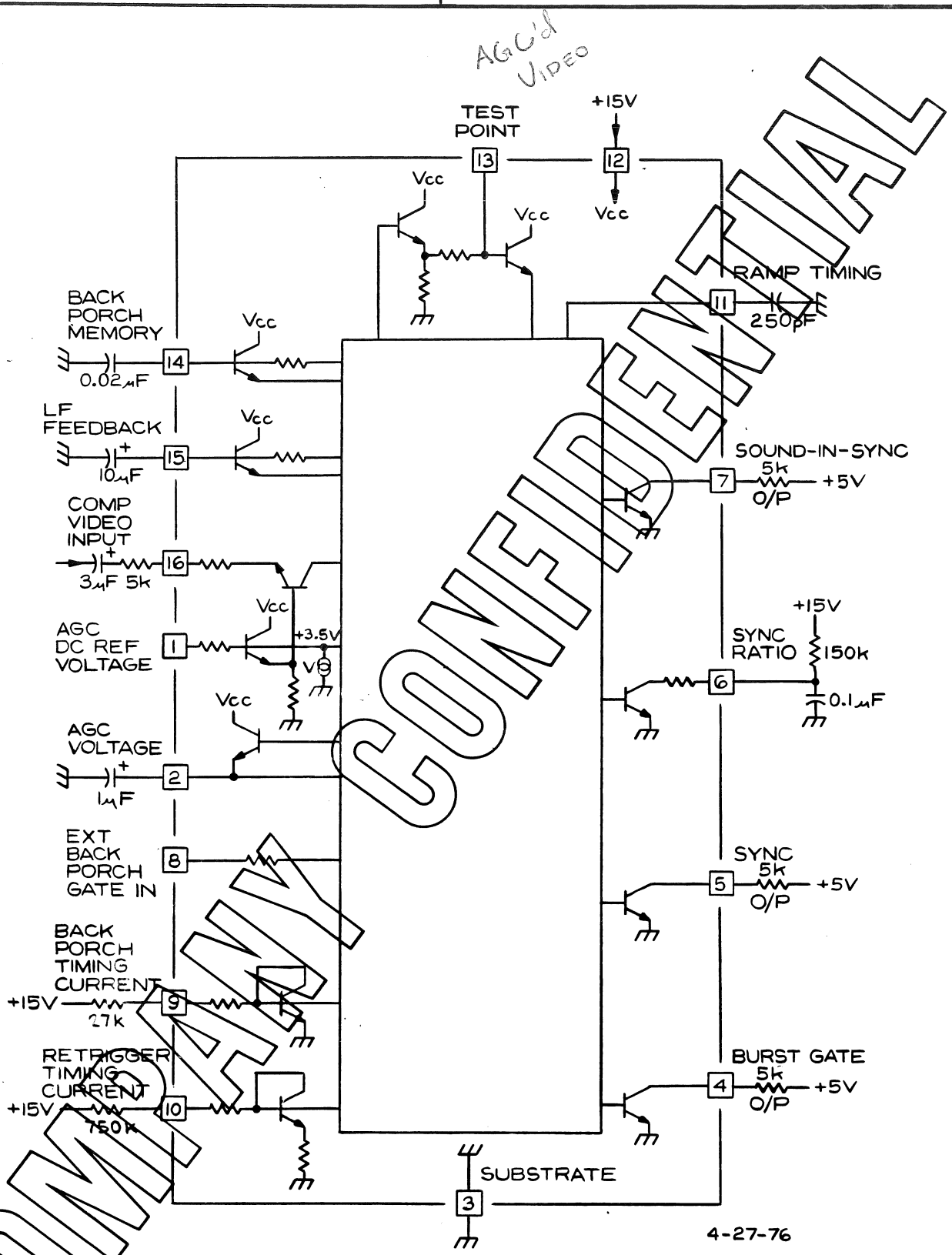

M124A SYNC SEPARATOR PIN-OUT DIAGRAM

COMPANY CONFIDENTIAL

FIGURE 1

TEKTRONIX, INC. BEAVERTON, OREGON	SHT 5 OF 9	CODE IDENT NO 80009	SIZE A	PART NUMBER 155-0144-00	REV OR

DO NOT SCALE DRAWING

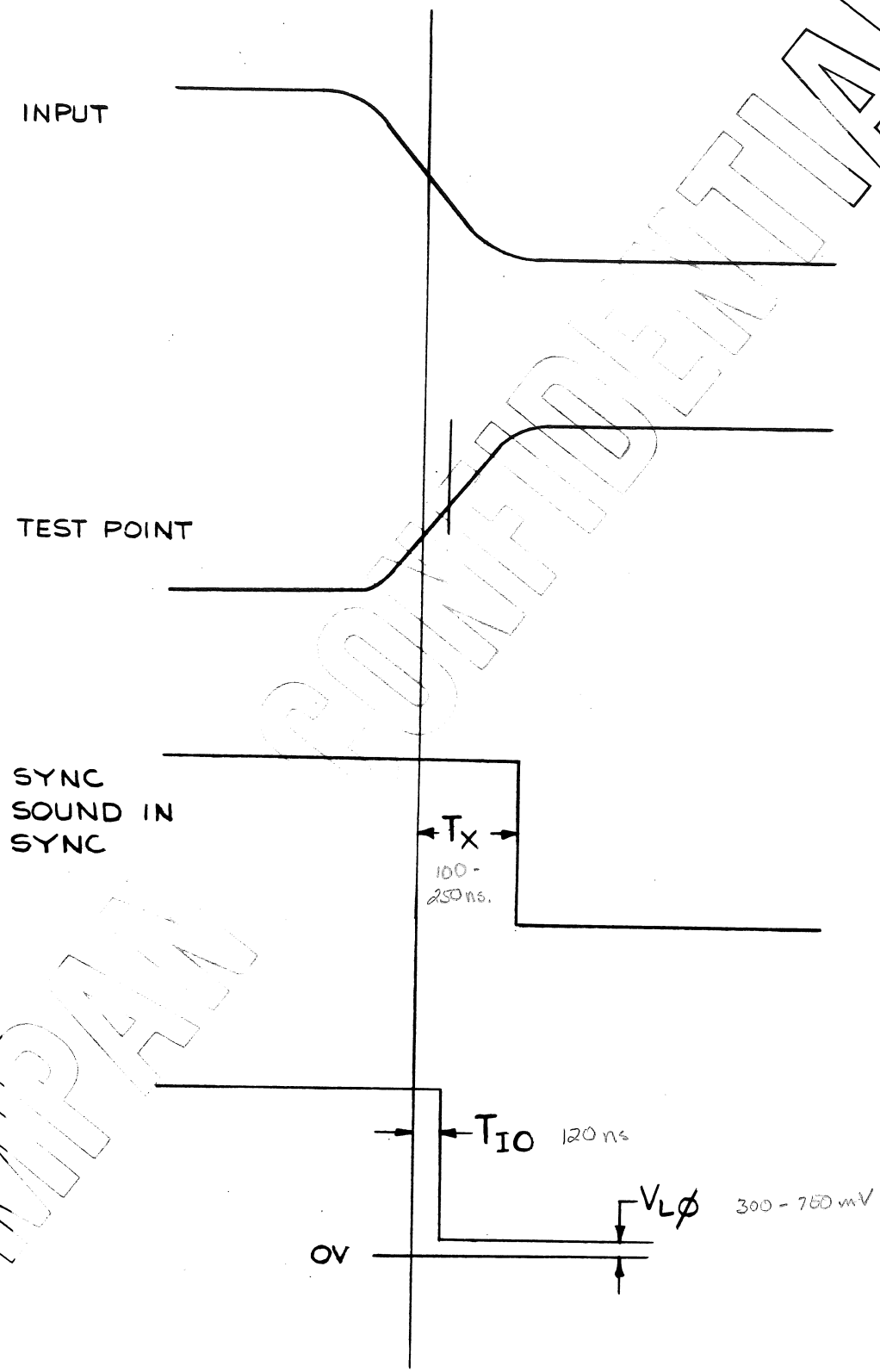

FIGURE 2

COMPANY CONFIDENTIAL

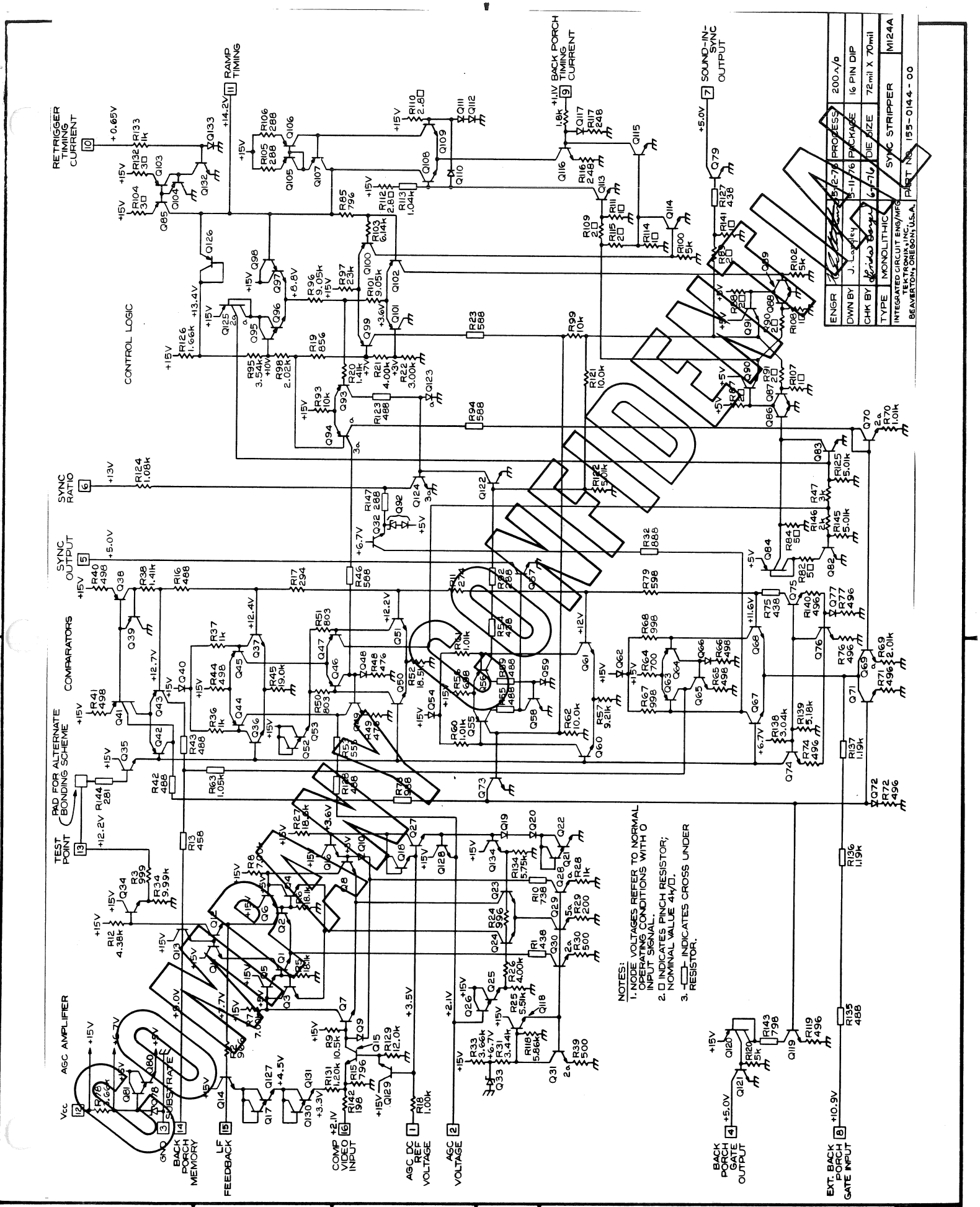

TEKTRONIX, INC. BEAVERTON, OREGON	SHT 7 OF 9	CODE IDENT NO 80009	SIZE A	PART NUMBER 155-0144-00	REV 0R

000-7243-00D

DO NOT SCALE DRAWING

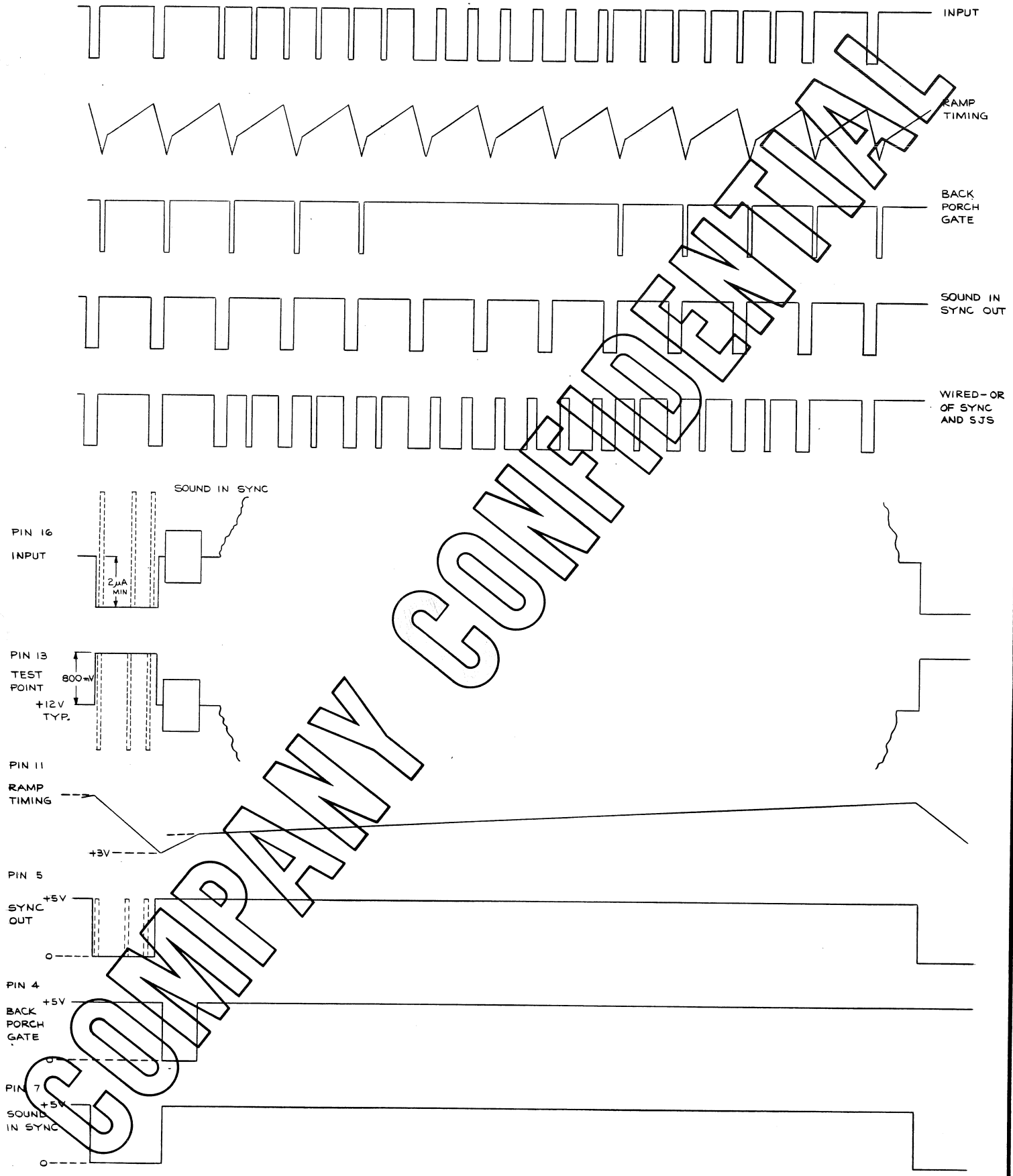

COMPANY CONFIDENTIAL

TEKTRONIX, INC. BEAVERTON, OREGON	SHT 8 OF 9	CODE IDENT NO 80009	SIZE A	PART NUMBER 155-0144-00	REV 0R

000-7243-00D

DO NOT SCALE DRAWING

OUTLINE DRAWING.

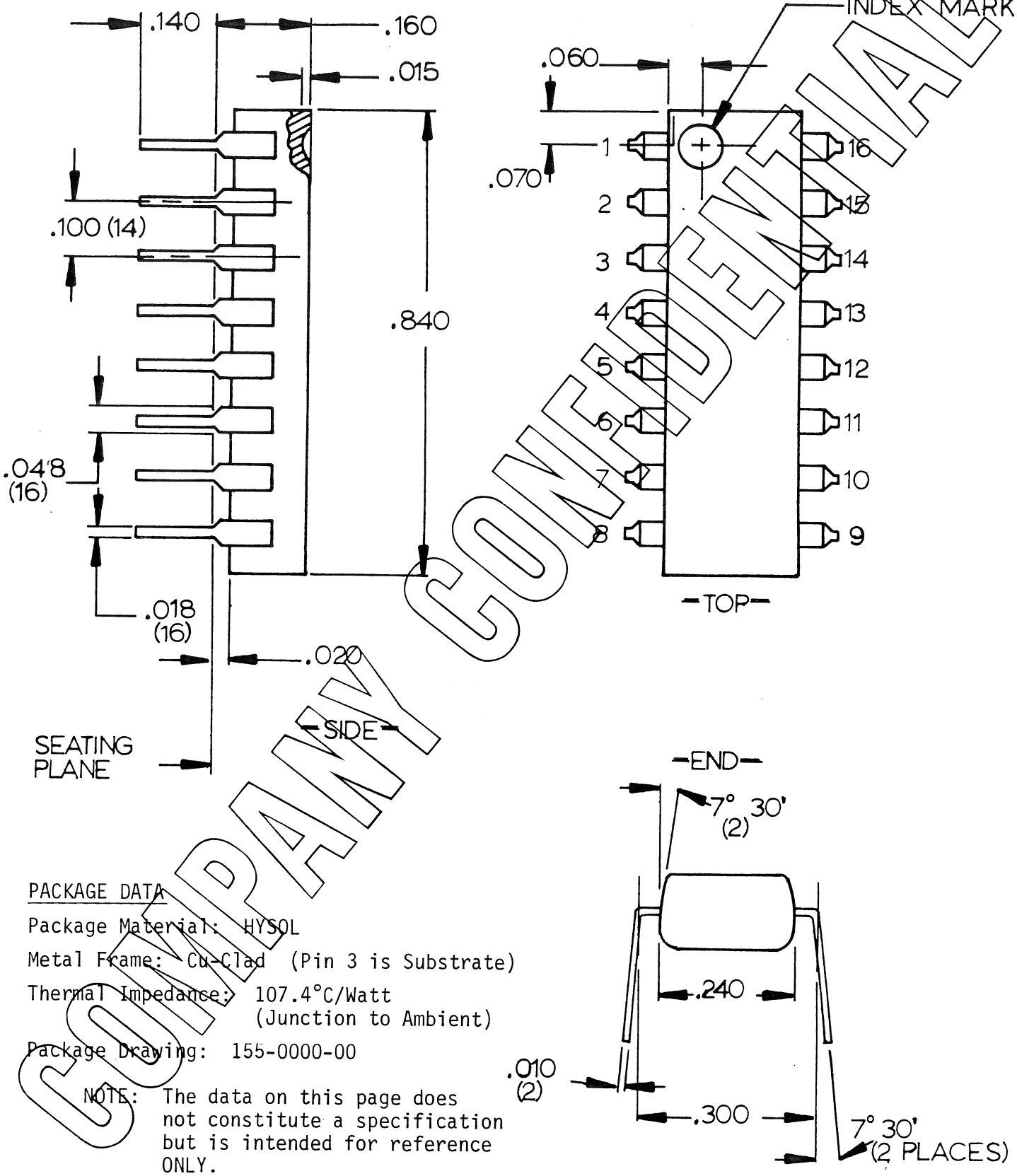

COMPANY CONFIDENTIAL

PACKAGE DATA

Package Material: HYSOL

Metal Frame: Cu-Clad (Pin 3 is Substrate)

Thermal Impedance: 107.4°C/Watt
(Junction to Ambient)

Package Drawing: 155-0000-00

NOTE: The data on this page does not constitute a specification but is intended for reference ONLY.

TEKTRONIX, INC. BEAVERTON, OREGON	SHT 9 OF 9	CODE IDENT NO 80009	SIZE A	PART NUMBER 155-0144-00	REV 0R

000-7243-00D

DO NOT SCALE DRAWING

REV	REF	DESCRIPTION OF CHANGE	CHK BY	DATE
		Original		6-10-76

REV OR

PART NUMBER 155-0144-0L

PACKAGE OUTLINE CONNECTION DIAGRAM
16 LEAD DUAL-IN-LINE
TOP VIEW

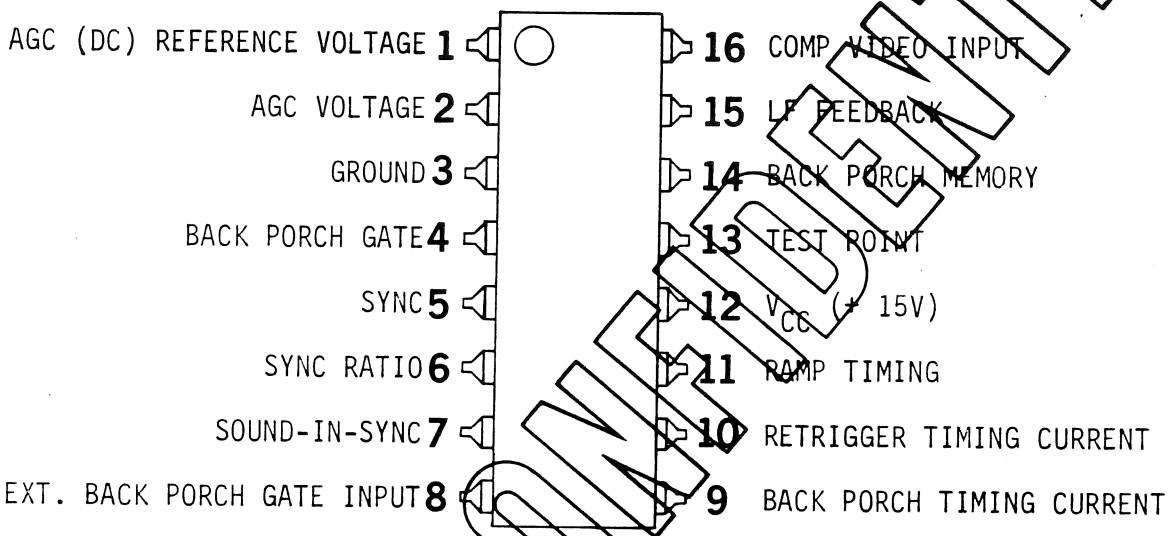

CONFIDENTIAL

MANUFACTURER	CODE IDENT NO	MANUFACTURER'S PART NUMBER
Tektronix, Inc.	P124A	155-0144-00

THIS DRAWING WHEN DISTRIBUTED OUTSIDE TEKTRONIX, INC IS SUPPLIED FOR IDENTIFICATION, ENGINEERING EVALUATION AND/OR INSPECTION PURPOSES ONLY AND MAY NOT BE USED AS A BASIS FOR MANUFACTURE OR SALES OF PRODUCTS WITHOUT WRITTEN PERMISSION FROM TEKTRONIX, INC.

IF THIS DRAWING IS FURNISHED UNDER ANY U.S. GOVERNMENT CONTRACT IT IS FURNISHED AS LIMITED RIGHTS DATA AND SHALL NOT, WITHOUT THE WRITTEN PERMISSION OF TEKTRONIX, INC. BE EITHER (A) USED, RELEASED, OR DISCLOSED IN WHOLE OR IN PART OUTSIDE THE GOVERNMENT, (B) USED IN WHOLE OR IN PART BY THE GOVERNMENT FOR MANUFACTURE OR (C) USED BY A PARTY OTHER THAN THE GOVERNMENT, EXCEPT FOR: (I) EMERGENCY REPAIR OR OVERHAUL WORK ONLY, BY OR FOR THE GOVERNMENT, WHERE THE ITEM OR PROCESS CONCERNED IS NOT OTHERWISE REASONABLY AVAILABLE TO ENABLE TIMELY PERFORMANCE OF THE WORK, PROVIDED THAT THE RELEASE OR DISCLOSURE HEREOF OUTSIDE THE GOVERNMENT SHALL BE MADE SUBJECT TO A PROHIBITION AGAINST FURTHER USE, RELEASE, OR DISCLOSURE; OR (II) RELEASE TO A FOREIGN GOVERNMENT, AS THE INTEREST OF THE UNITED STATES MAY REQUIRE, ONLY FOR INFORMATION OR EVALUATION WITHIN SUCH GOVERNMENT OR FOR EMERGENCY REPAIR OR OVERHAUL WORK BY OR FOR SUCH GOVERNMENT UNDER THE CONDITIONS OF ABOVE. THIS LEGEND SHALL BE INCLUDED ON REPRODUCTION HEREOF

☐ MANUFACTURED TO TEK, INC. SPEC.
☒ TEKTRONIX, INC. ITEM DRAWING
☐ SPECIFICATION CONTROL DRAWING

☐ ALTERED ITEM DRAWING
☐ SELECTED ITEM DRAWING
☐ SOURCE CONTROL DRAWING

TEKTRONIX, INC.
P. O. BOX 500
BEAVERTON, OREGON U.S.A. 97077

DWN		DIMENSIONS ARE IN INCHES / MM TOLERANCES: UNLESS OTHERWISE SPECIFIED	
ENGR		DEC	ANLR
CHKR			
PROD		SCALE	FIRST USED ON
MATERIAL			
FINISH			
TITLE	SYNC STRIP CIRCUIT		

182	SH 1 OF 9	CODE IDENT NO 80009	SIZE A	PART NUMBER 155-0144-00	REV OR

000-7242-00 D

DO NOT SCALE DRAWING

FT DOUBLER AMPLIFIER 203-0126-90 M126

DESCRIPTION

This circuit is an altered version of the M083 (155-0061-00). The M083 Nichrome emitter resistors have been removed; otherwise it is the same.

PROCESS . . . . . SHF II

POWER SUPPLY. . . . . .

PACKAGE . . . . . TO-8 With Small Stud

DESIGNER . . . . . Hans Springer

INSTRUMENT USAGE 7903
7904
7844 MODS

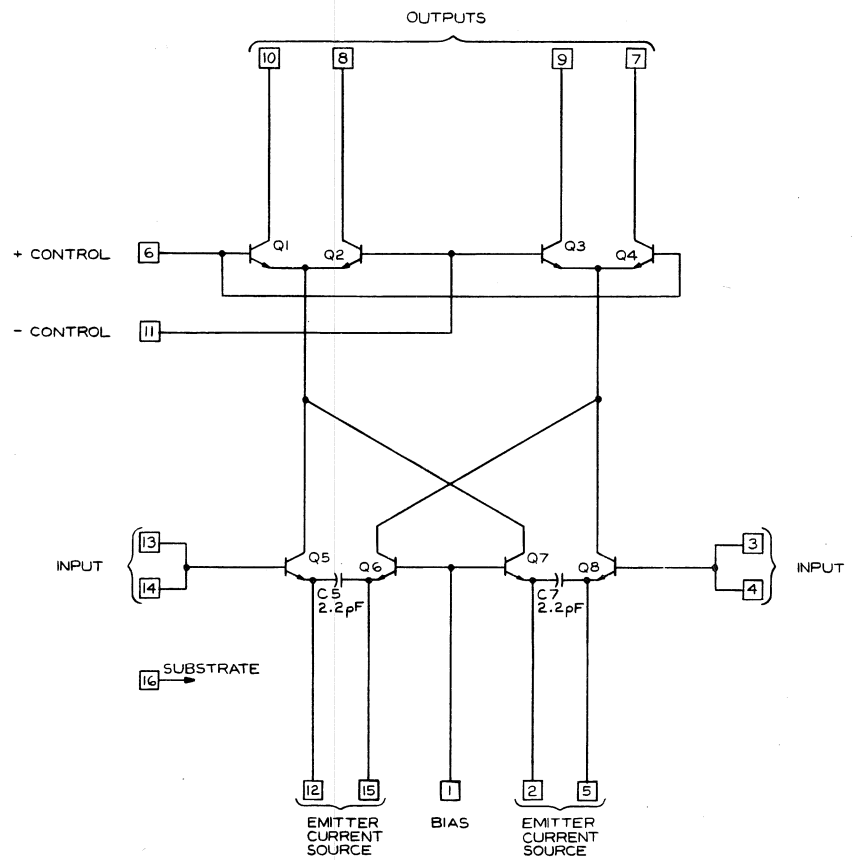

ENGR		10-28-75	PROCESS	SH II
DWN BY	J. Langley	10-22-75	PACKAGE	TO-8 w. STUD
CHK BY	C. WESTON	10-28-75	DIE SIZE	50mil X 45mil
TYPE	MONOLITHIC	f_T DOUBLER AMPLIFIER		M126
INTEGRATED CIRCUIT ENG/MFG TEKTRONIX, INC. BEAVERTON, OREGON, U.S.A.		PART NO. 203-0126-90		

SEVEN SEGMENT CHARACTER GENERATOR 155-0114-00 M127

DESCRIPTION

This circuit takes information inputed in BCD form (negative logic), decodes it, and generates the necessary outputs to display a seven segment character on a CRT screen. Inputs have TTL voltage thresholds. The "X" and "Y" position outputs are currents as is the Z-axis output. A character segment is generated by first positioning the segment origin with "X" and "Y" currents and then ramping either the "X" or "Y" current to create the segment. The next segment is created by repositioning the origin and again ramping either "X" or "Y", and so on. A sign input is provided allowing a choice of plus, minus, or no sign to be displayed. Outputs are provided to indicate when the M127 is generating a character and to indicate when a decimal point is being made.

PROCESS . . . . . 200 Ω/Sq

POWER SUPPLY. . . . . V_{CC} +6.5V, V_{EE} -6.5V

PACKAGE . . . . . 16 DIP

DESIGNER . . . . . Wendell Damm

INSTRUMENT USAGE 213

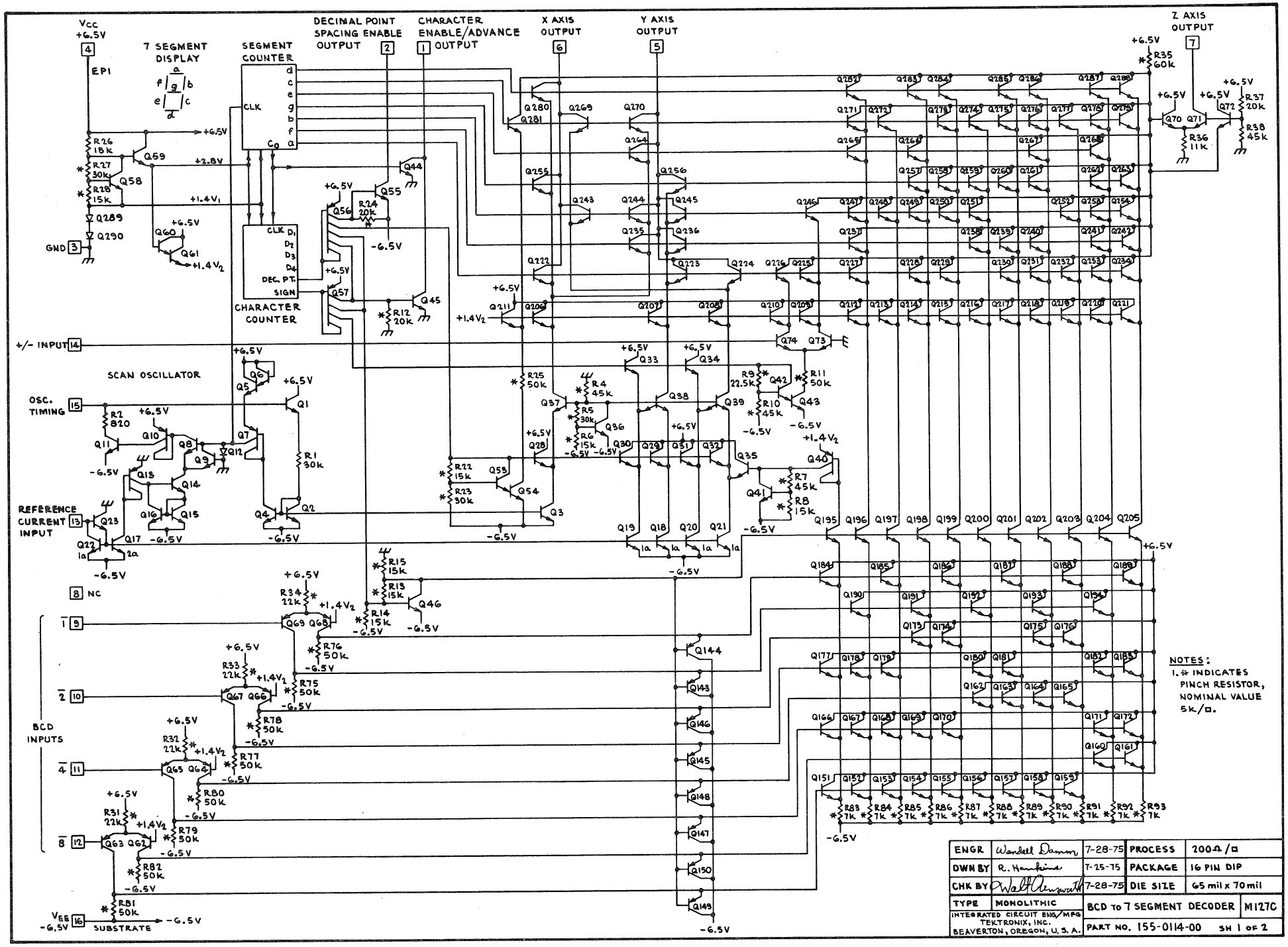
Vcc +6.5V
DECIMAL POINT SPACING ENABLE OUTPUT
CHARACTER ENABLE/ADVANCE OUTPUT
X AXIS OUTPUT
Y AXIS OUTPUT
Z AXIS OUTPUT
7 SEGMENT DISPLAY
SEGMENT COUNTER
CHARACTER COUNTER
SCAN OSCILLATOR
+/- INPUT
OSC. TIMING
REFERENCE CURRENT INPUT
BCD INPUTS
GND
VEE -6.5V
SUBSTRATE
NC
NOTES:
1. * INDICATES PINCH RESISTOR, NOMINAL VALUE 5k/□.
ENGR Wendell Damm 7-28-75 PROCESS 200Ω/□
DWN BY R. Hawkins 7-25-75 PACKAGE 16 PIN DIP
CHK BY Walt Ainsworth 7-28-75 DIE SIZE 65 mil x 70 mil
TYPE MONOLITHIC
INTEGRATED CIRCUIT ENG/MFG TEKTRONIX, INC. BEAVERTON, OREGON, U.S.A.
BCD to 7 SEGMENT DECODER M127C
PART NO. 155-0114-00 SH 1 OF 2

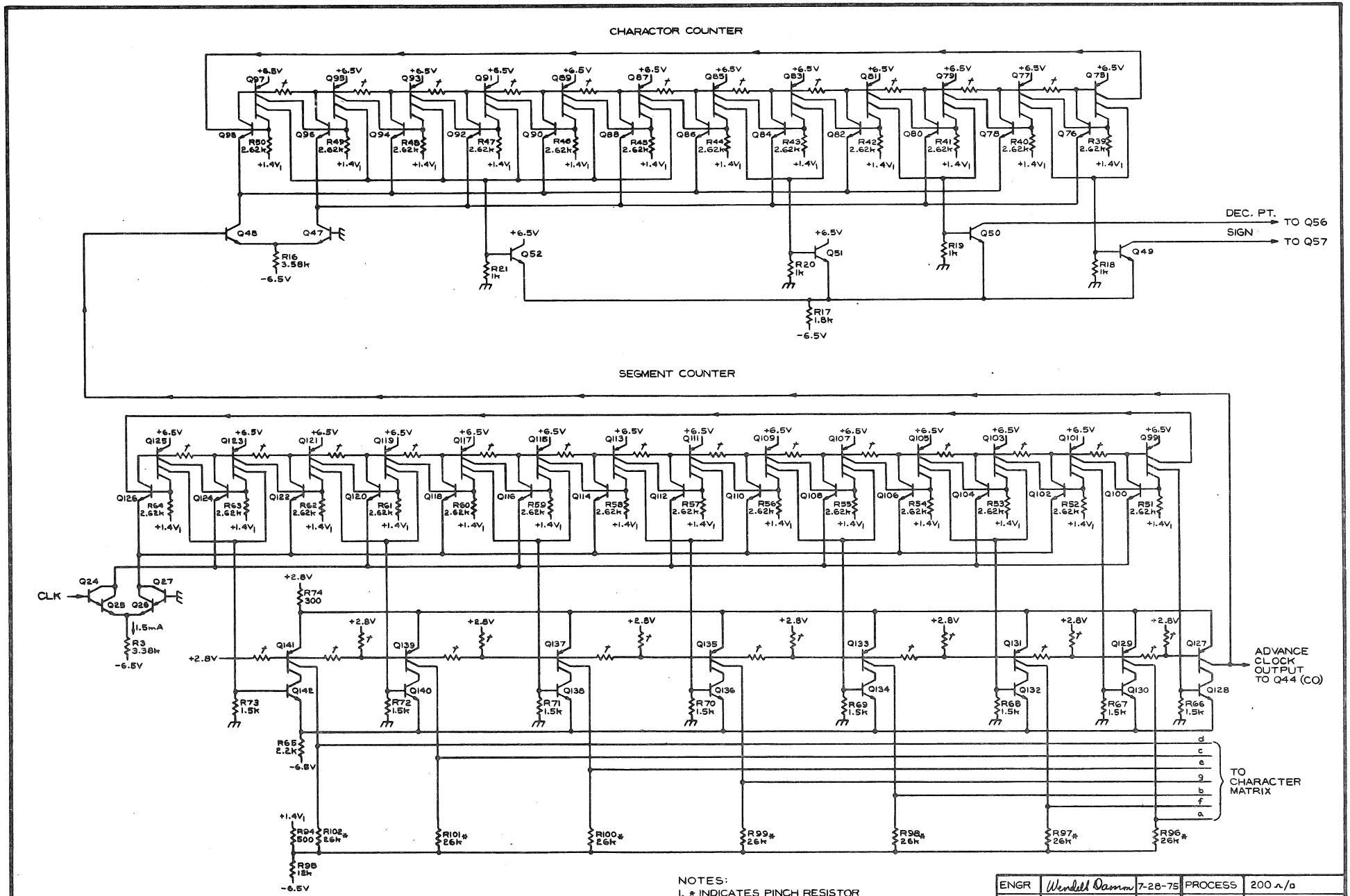

NOTES:
1. * INDICATES PINCH RESISTOR NOMINAL VALUE 5kΩ/□.
2. ⌇ INDICATES EPI RESISTOR.

ENGR	Wendell Damm	7-28-75	PROCESS	200 Ω/□
DWN BY	J. Langley	7-14-75	PACKAGE	16 PIN DIP
CHK BY	Walt Ausmus	7-28-75	DIE SIZE	65mil X 70mil
TYPE	MONOLITHIC	BCD TO 7-SEGMENT DECODER		M127C
INTEGRATED CIRCUIT ENG/MFG TEKTRONIX, INC. BEAVERTON, OREGON, U.S.A.		PART NO. 155-0114-00		SH 2 OF 2

VERTICAL AMPLIFIER 203-0130-90 M130

DESCRIPTION

The M130 is a Preamplifier for the 455 Portable Oscilloscope. Each chip contains one channel with gain switch, gain calibration, positioning, trigger pick-off, and channel switch. Two chips are combined on a ceramic substrate with heatsink and printed resistors to form the 155-0155-00 (H332).

PROCESS	SHF II
POWER SUPPLY.	± 5 Volts and Ground
PACKAGE	Custom Hybrid
DESIGNER	Jim Woo
INSTRUMENT USAGE	455 465M

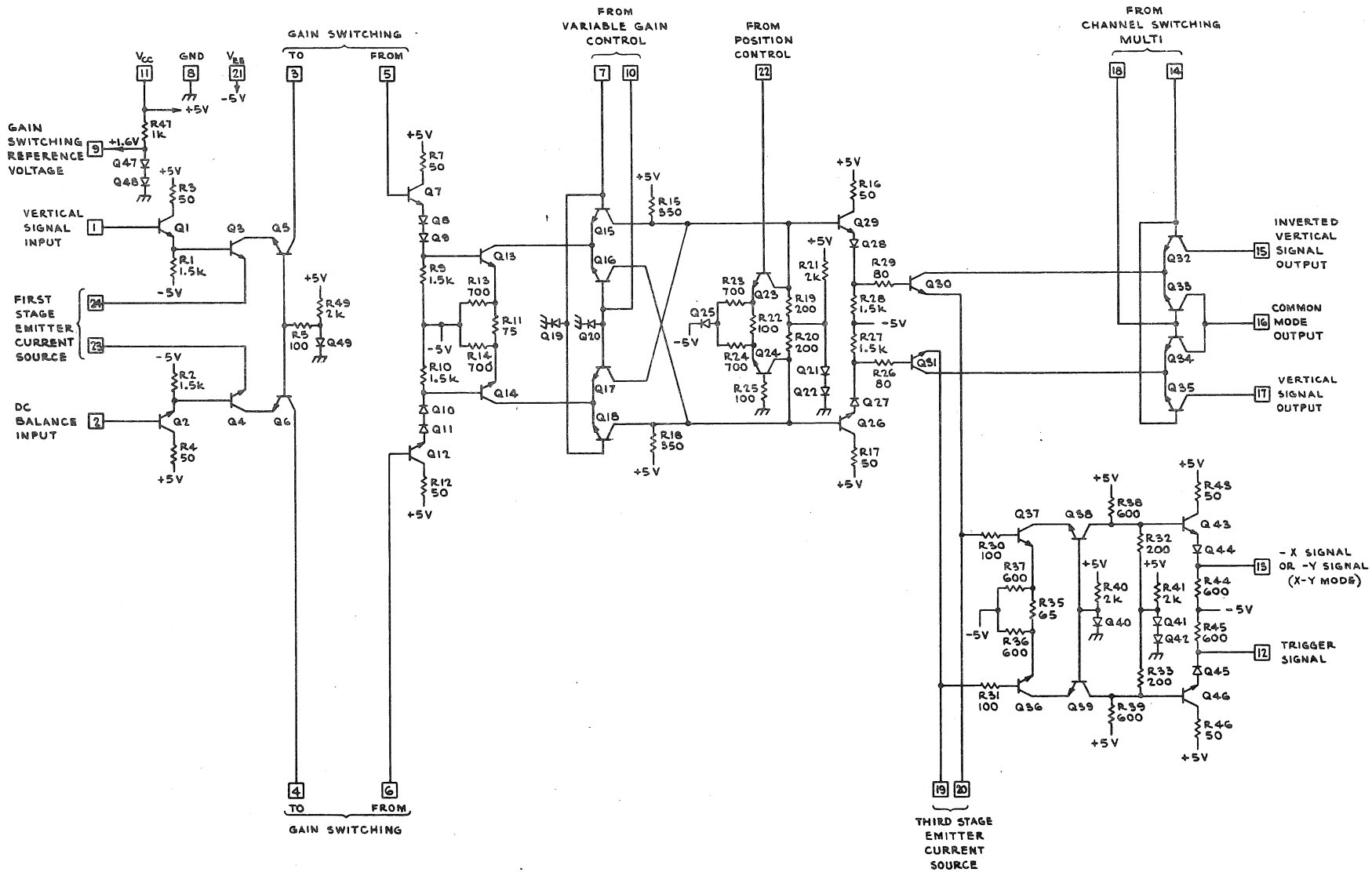

ENGR	Evan Trae	1-24-75	PROCESS	SHF II
DWN BY	R. Hankins	12-18-74	PACKAGE	H332
CHK BY	H. Ellson	6-18-75	DIE SIZE	65 mil x 65 mil
TYPE	MONOLITHIC	VERTICAL AMPLIFIER		M130
INTEGRATED CIRCUIT ENG/MFG TEKTRONIX, INC. BEAVERTON, OREGON, U.S.A.		PART NO. 203-0130-90		

TRIGGER SUB-SYSTEM 155-0121-00 M131A

DESCRIPTION

This Trigger Circuit is intended for use up to 50 MHz. It contains a triggering circuit, a trigger signal preamplifier, and a trigger view amplifier. The trigger signal input and level input are designed ± 0.5 V signals referenced to ground. The M131A is designed to interface with the M132A sweep control and M133A sweep and delay pickoff integrated circuits to form a complete horizontal system. Operating voltages for the M131A are ± 5V at a power dissipation of approximately 310 mW.

PROCESS	200 Ω/Sq
POWER SUPPLY.	V_{CC} +5V, V_{EE} -5V
PACKAGE	16 Pin DIP
DESIGNER	Larry Gagliani
INSTRUMENT USAGE	455

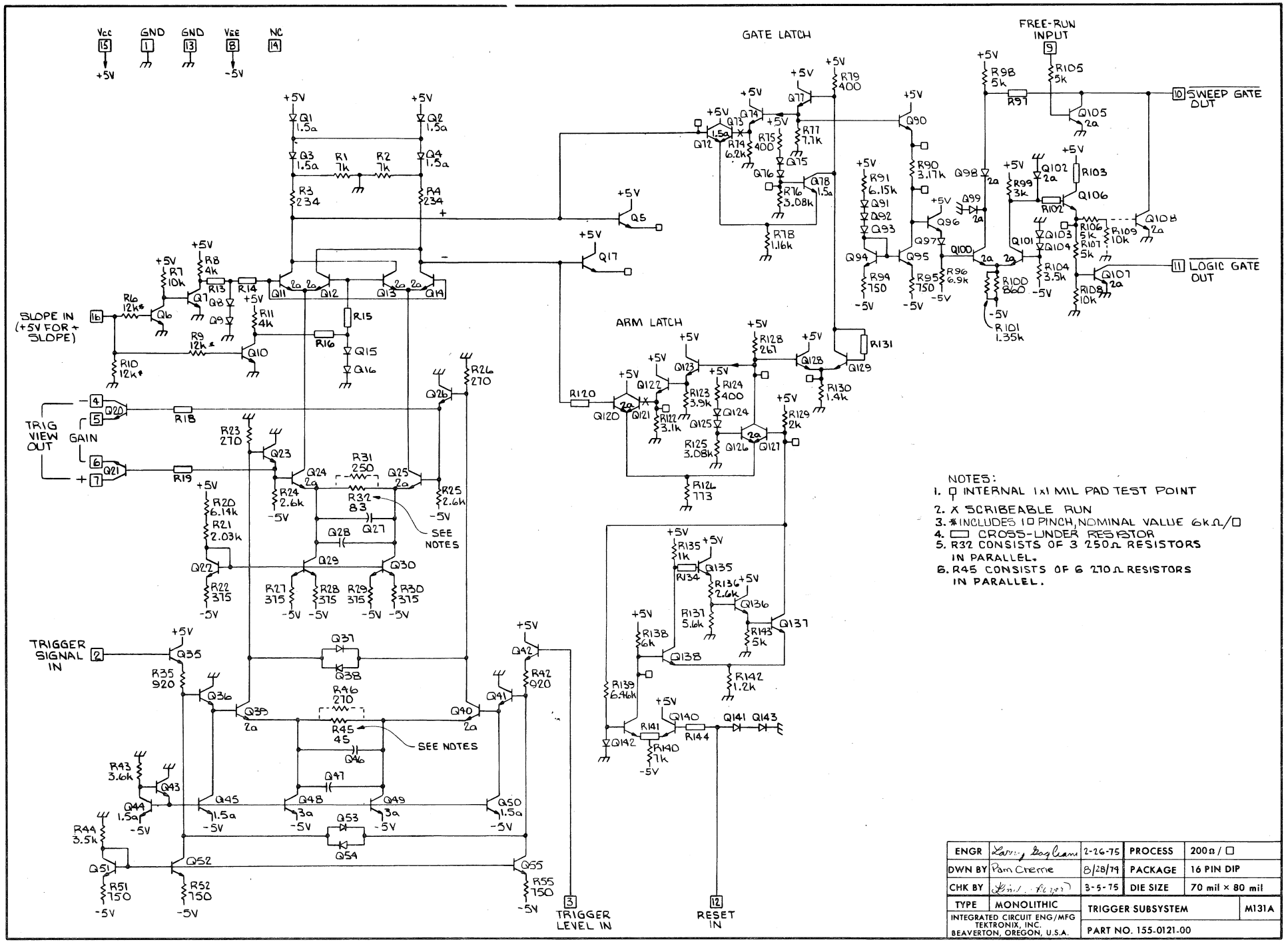

NOTES:
1. ▯ INTERNAL 1x1 MIL PAD TEST POINT
2. X SCRIBEABLE RUN
3. * INCLUDES 1 ▯ PINCH, NOMINAL VALUE 6kΩ/▯
4. ▭ CROSS-UNDER RESISTOR
5. R32 CONSISTS OF 3 250Ω RESISTORS IN PARALLEL.
6. R45 CONSISTS OF 6 270Ω RESISTORS IN PARALLEL.

ENGR	Larry Boylan	2-26-75	PROCESS	200Ω / ▯
DWN BY	Pam Crenne	8/28/74	PACKAGE	16 PIN DIP
CHK BY	[illegible]	3-5-75	DIE SIZE	70 mil × 80 mil
TYPE	MONOLITHIC	TRIGGER SUBSYSTEM		M131A
INTEGRATED CIRCUIT ENG/MFG TEKTRONIX, INC. BEAVERTON, OREGON, U.S.A.		PART NO. 155-0121-00		

SWEEP CONTROL 155-0122-00 M132A

DESCRIPTION

This sweep control circuit contains the hold-off timing Miller, single sweep lockout circuit, triggered and single sweep ready light lamp drivers, single sweep reset debounce circuit, auto timing circuit and an "A" Gate output. The M132A is designed to operate with the M133A sweep and delay pickoff and the M131A trigger. The M132A operates from +5V at a power dissipation of approximately 125 mW.

PROCESS . . . . . 200 Ω/Sq

POWER SUPPLY. . . . . .

PACKAGE . . . . . 16 Pin DIP

DESIGNER . . . . . Larry Gagliani

INSTRUMENT USAGE 455

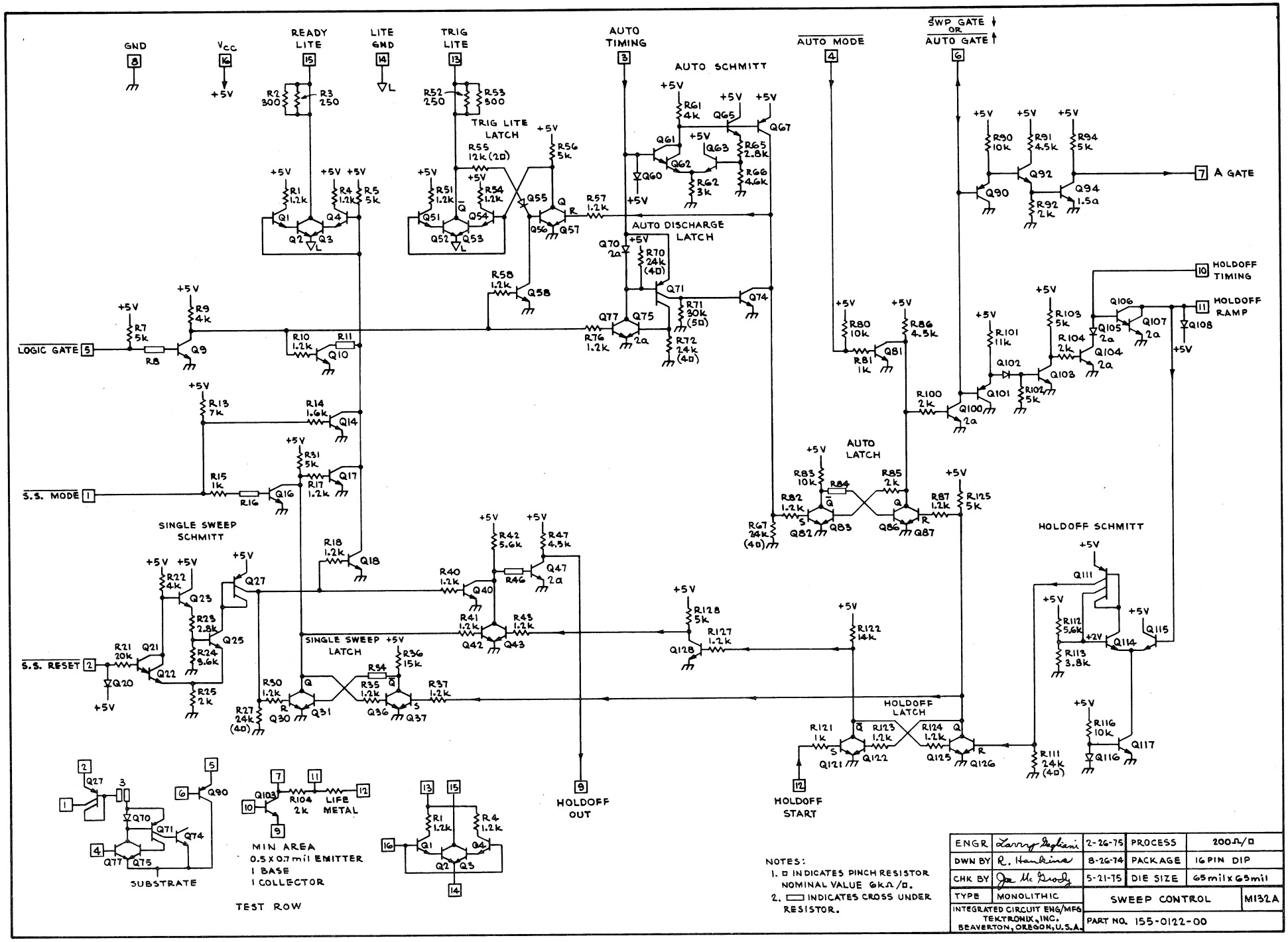
GND
8
VCC
16
+5V
READY LITE
15
LITE GND
14
TRIG LITE
13
AUTO TIMING
3
AUTO MODE
4
SWP GATE OR AUTO GATE
6
AUTO SCHMITT
TRIG LITE LATCH
AUTO DISCHARGE LATCH
A GATE
7
HOLDOFF TIMING
10
HOLDOFF RAMP
11
LOGIC GATE
5
S.S. MODE
1
SINGLE SWEEP SCHMITT
S.S. RESET
2
SINGLE SWEEP LATCH
AUTO LATCH
HOLDOFF SCHMITT
HOLDOFF LATCH
HOLDOFF OUT
9
HOLDOFF START
12
SUBSTRATE
MIN AREA
0.5 x 0.7 mil EMITTER
1 BASE
1 COLLECTOR
TEST ROW
LIFE METAL
NOTES:
1. ▫ INDICATES PINCH RESISTOR NOMINAL VALUE 6kΩ/▫.
2. ▭ INDICATES CROSS UNDER RESISTOR.
ENGR
DWN BY
CHK BY
TYPE
MONOLITHIC
INTEGRATED CIRCUIT ENG/MFG
TEKTRONIX, INC.
BEAVERTON, OREGON, U.S.A.
PROCESS
200Ω/▫
PACKAGE
16 PIN DIP
DIE SIZE
65 mil x 65 mil
SWEEP CONTROL
M132A
PART NO. 155-0122-00

SWEEP AND PICKOFF 155-0123-00 M133A

DESCRIPTION

The 155-0123-00 (M133) contains a control circuit and current source for an external Miller, sweep end circuit, sweep switch, "Z" axis control, and a delay pickoff.

It is used with the 155-0122-00 (M132) sweep control integrated circuit, and the 155-0124-00 (M138) horizontal pre-amplifier integrated circuit.

PROCESS	200 Ω/Sq
POWER SUPPLY.	± 5 Volts, 330 mW
PACKAGE	16 Pin DIP
DESIGNERS.	Jim Godwin/Mike Metcalf
INSTRUMENT USAGE	455

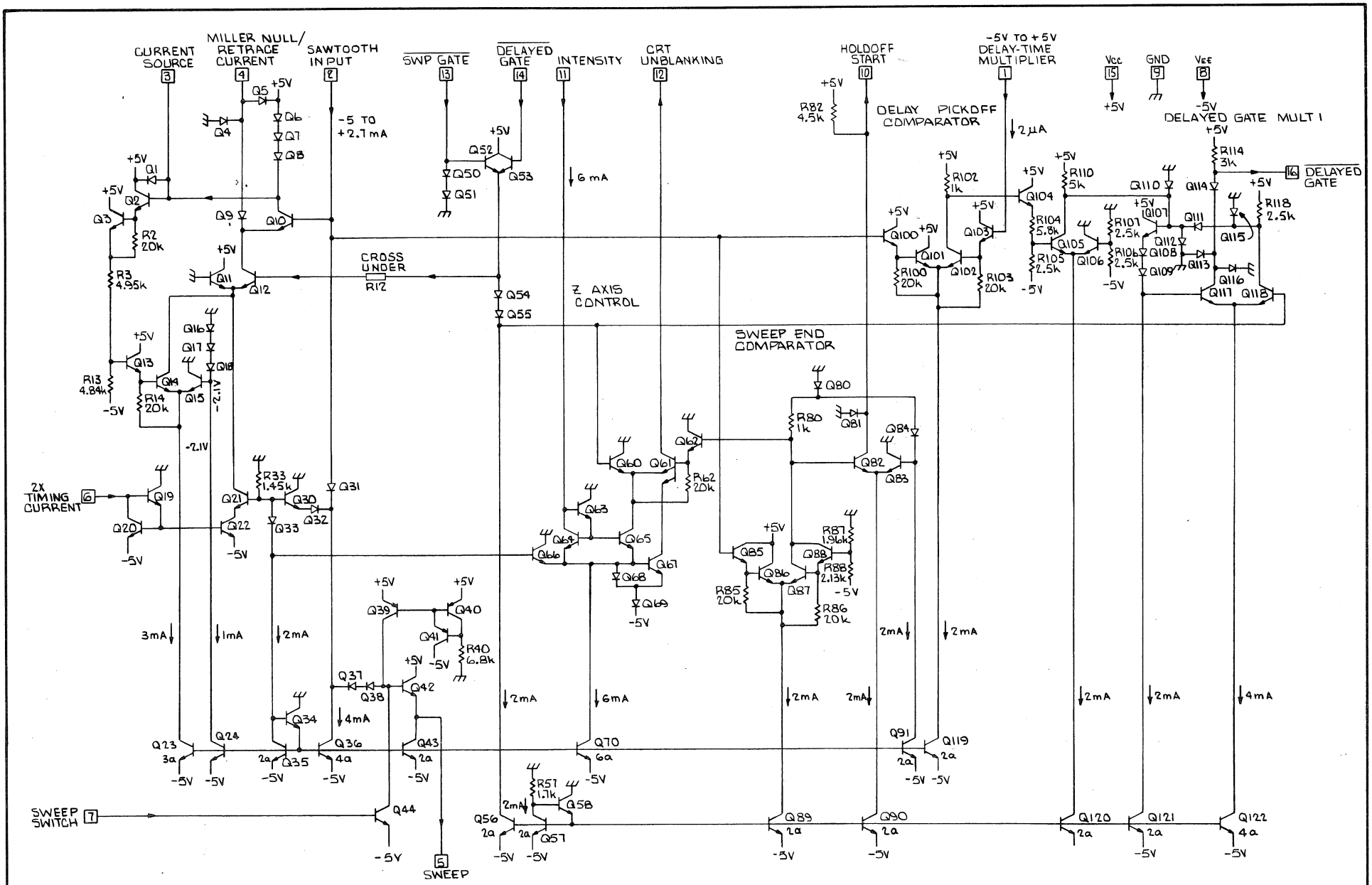

ENGR	Jim Schwin	4-28-75	PROCESS	200Ω / □
DWN BY	Pam Cherne	9-10-74	PACKAGE	16 PIN DIP
CHK BY	Joe McBrady	5-20-75	DIE SIZE	60 mil × 60 mil
TYPE	MONOLITHIC	SWEEP & PICKOFF		M133A
INTEGRATED CIRCUIT ENG/MFG TEKTRONIX, INC. BEAVERTON, OREGON, U.S.A.		PART NO. 155-0123-00		

TRIGGER SOURCE SELECTOR AND AMPLIFIER 155-0160-00 M136

DESCRIPTION

The M136 provides for selection of one of three trigger sources. There are two high frequency channels and one low frequency channel. Channel selection is accomplished by switching a current source (resistor to -15V) to the appropriate select pin. Input voltages are at zero volts. External load resistors are required. When the load resistors are 50 ohms, gain and bandwidth are nominally 6 MHz and 1500 MHz respectively.

PROCESS	SHF III
POWER SUPPLY.	+2.5 Volt Resistor From -15 Volts to Source Select (one of three)
PACKAGE	16 Pin MiniPac
DESIGNER	Art Metz
INSTRUMENT USAGE	7B10 7B15 067-0821-00

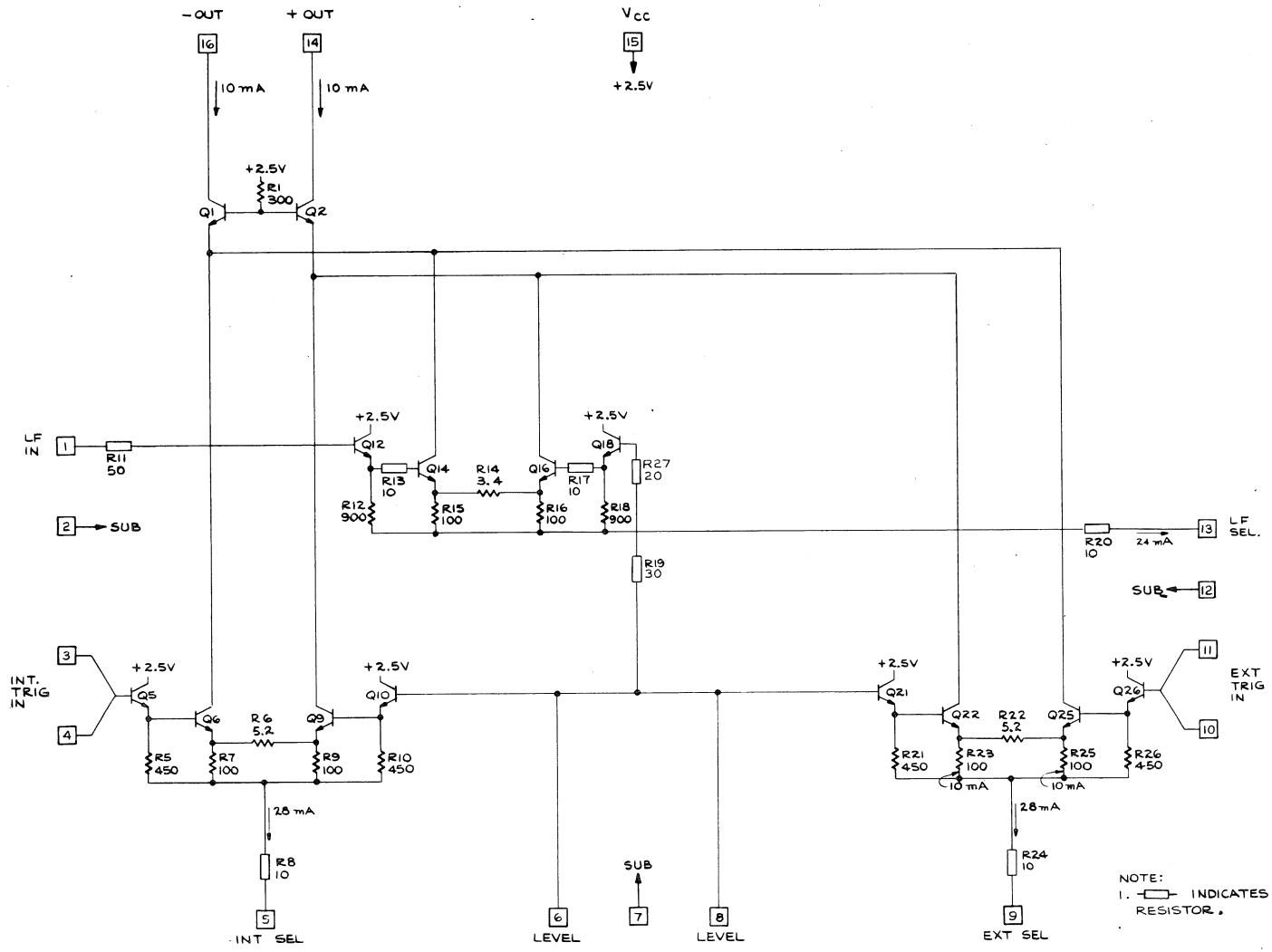

NOTE:
1. —▭— INDICATES CROSSUNDER RESISTOR.

ENGR	Walt Chenoweth	12-9-76	PROCESS	SHF III
DWN BY	S. POLENDEY	9-9-76	PACKAGE	16 PIN MINIPAC
CHK BY	C. WESTON	3-17-77	DIE SIZE	48mil. X 48mil.
TYPE	MONOLITHIC	TRIGGER AMPLIFIER & CHANNEL SWITCH		M136C
INTEGRATED CIRCUIT ENG/MFG TEKTRONIX, INC. BEAVERTON, OREGON, U.S.A.		PART NO. 155-0160-00		

HORIZONTAL PREAMPLIFIER 155-0124-00 M138

DESCRIPTION

This Integrated Circuit has a maximum sweep rate of 5 ns/div. "A" and "B" sweep input range is +2.0 volts to -2.4 volts with channel switching accomplished by pulling 2 mA out of the unused input(s). In X-Y operation (selected by pulling mode control to +5 volts), the "X" signal sees a 5 MHz preamplifier with gain of 10 and input range of approximately ± 200 mV. Output is a differential current from common base transistors with a sensitivity of 0.2 mA/div/side. Gain is adjusted and switched externally by selecting emitter resistors for the input differential pair.

The M138 has provisions for mag registration and horizontal position inputs. Bias current level is set with an external resistor. Nominal operation is ± 5.0 volt supplies with a power dissipation of 185 mW (215 mW in X-Y mode).

PROCESS	200 Ω/Sq
POWER SUPPLY.	V_{CC} +5V, V_{EE} -5V
PACKAGE	16 Pin DIP
DESIGNER	Bob Nordstrom
INSTRUMENT USAGE	455

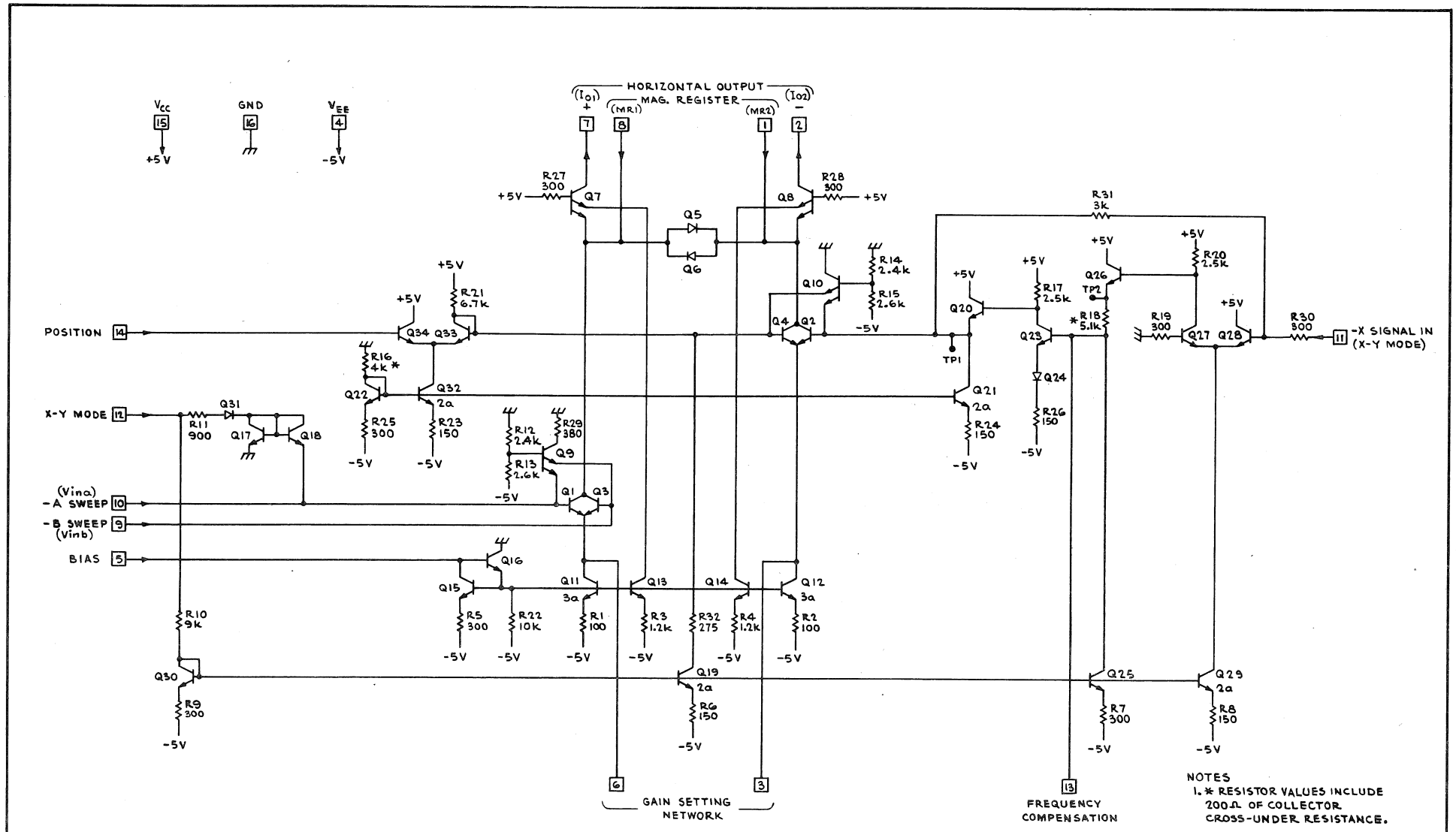

NOTES
1. * RESISTOR VALUES INCLUDE 200Ω OF COLLECTOR CROSS-UNDER RESISTANCE.

ENGR	R. Nobstrom	9-19-74	PROCESS	200Ω/□
DWN BY	R. Hankins	9-16-74	PACKAGE	16 PIN DIP
CHK BY	Jon M. Brady	11-12-74	DIE SIZE	55 mil x 55 mil
TYPE	MONOLITHIC	HORIZONTAL PREAMPLIFIER		M138
INTEGRATED CIRCUIT ENG/MFG TEKTRONIX, INC. BEAVERTON, OREGON, U.S.A.		PART NO. 155-0124-00		

4-DECADE COUNTER AND MEMORY 155-0171-00 M150A

DESCRIPTION

This circuit is comprised of four cascaded decade counters, each with a buffer memory, each of which can drive the decimal to analog converter. Thus it can count up to 9999, store the count at anytime and convert it to an output form suitable for interfacing with the New Generation knob-readout system. Output pulses are also provided at the output of the 2nd, 3rd, and 4th decades. A zero-not output is provided for leading zero's blanking. Maximum input frequency is 15 MHz.

PROCESS . . . . . 200 Ω/Sq

POWER SUPPLY. . . . . V_{CC} +5 Volts

PACKAGE . . . . . 16 Minipac

DESIGNER . . . . . Mike Metcalf

INSTRUMENT USAGE 7J20 7D12
7D15 7B85
7D01

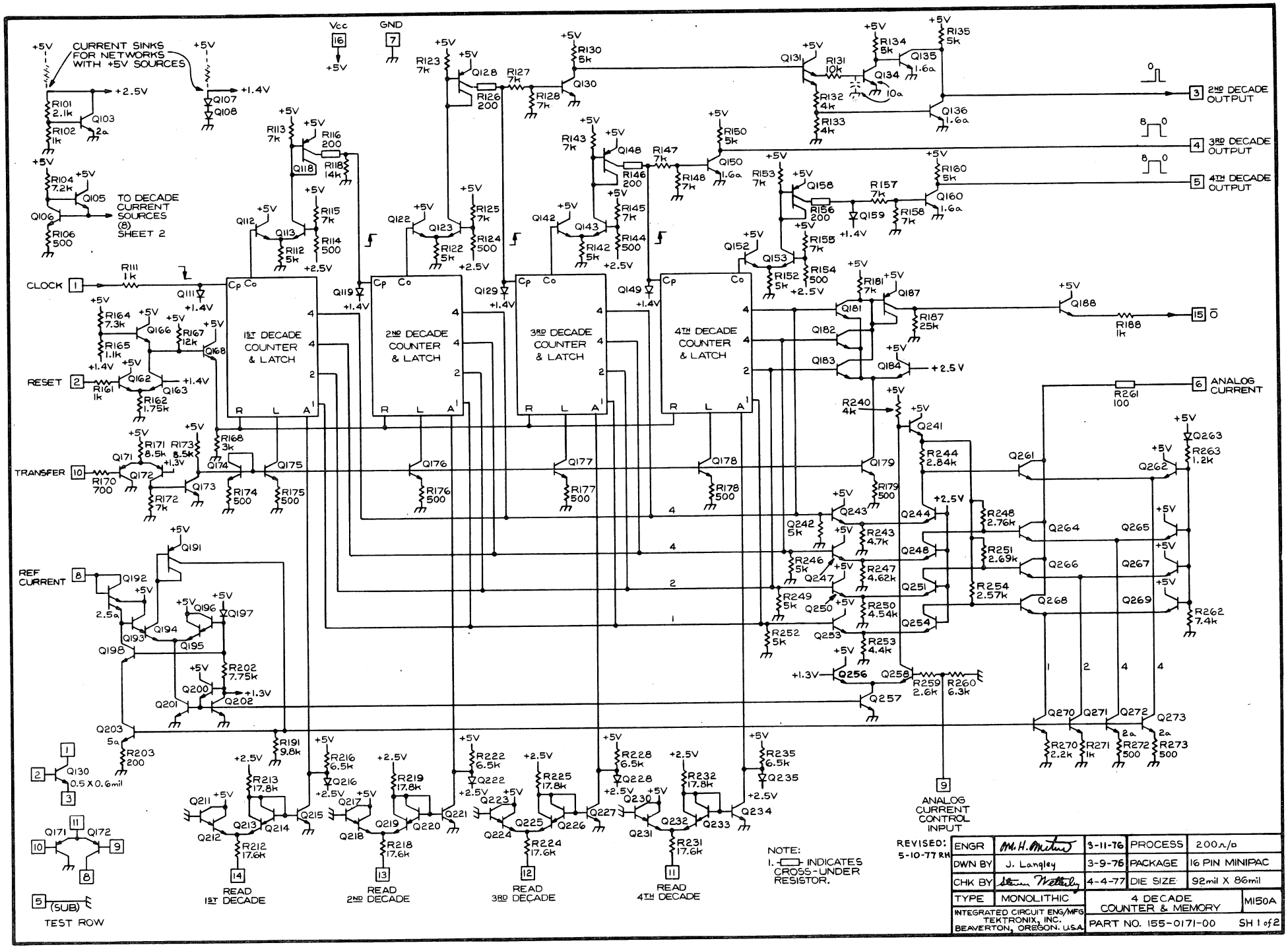
CURRENT SINKS FOR NETWORKS WITH +5V SOURCES
TO DECADE CURRENT SOURCES (8) SHEET 2
Vcc
GND
CLOCK
RESET
TRANSFER
REF CURRENT
1ST DECADE COUNTER & LATCH
2ND DECADE COUNTER & LATCH
3RD DECADE COUNTER & LATCH
4TH DECADE COUNTER & LATCH
2ND DECADE OUTPUT
3RD DECADE OUTPUT
4TH DECADE OUTPUT
ANALOG CURRENT
ANALOG CURRENT CONTROL INPUT
READ 1ST DECADE
READ 2ND DECADE
READ 3RD DECADE
READ 4TH DECADE
TEST ROW
NOTE:
1. INDICATES CROSS-UNDER RESISTOR.
REVISED: 5-10-77 RH
ENGR M. H. Mitchell 3-11-76 PROCESS 200Ω/□
DWN BY J. Langley 3-9-76 PACKAGE 16 PIN MINIPAC
CHK BY 4-4-77 DIE SIZE 92mil X 86mil
TYPE MONOLITHIC
4 DECADE COUNTER & MEMORY M150A
INTEGRATED CIRCUIT ENG/MFG TEKTRONIX, INC. BEAVERTON, OREGON, U.S.A.
PART NO. 155-0171-00 SH 1 of 2

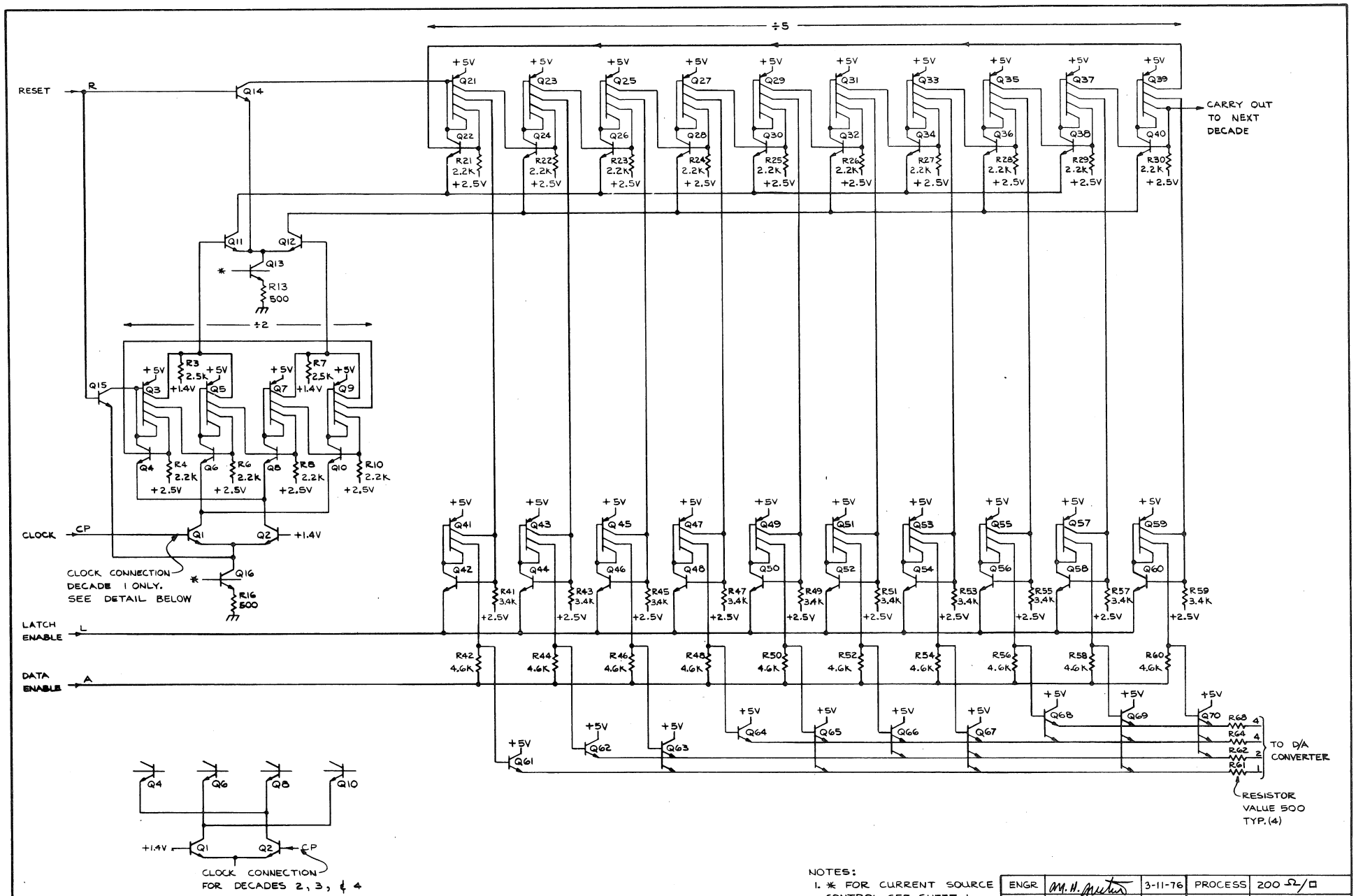

NOTES:
1. * FOR CURRENT SOURCE CONTROL SEE SHEET 1.

ENGR	M. H. Mutter	3-11-76	PROCESS	200 Ω/□
DWN BY	S. POLENDEY	2-12-76	PACKAGE	16 PIN MINIPAC
CHK BY	Steve Metterly	4-4-77	DIE SIZE	92 mil X 86 mil
TYPE	MONOLITHIC	4 DECADE COUNTER AND MEMORY		M150A
INTEGRATED CIRCUIT ENG/MFG TEKTRONIX, INC. BEAVERTON, OREGON, USA		PART NO. 155-0171-00		SH 2 OF 2

PULSE OUTPUT AMPLIFER 155-0145-00 M151

DESCRIPTION

This circuit provides a controlled risetime output pulse occurring between ground and a programmable negative level, given a TTL input pulse. Two such amplifiers are provided per package.

PROCESS	200 Ω/Sq
POWER SUPPLY.	+5V to -10V
PACKAGE	16 DIP
DESIGNERS.	Howard Landsman/ Ken Schlotzhauer
INSTRUMENT USAGE	1410 1470

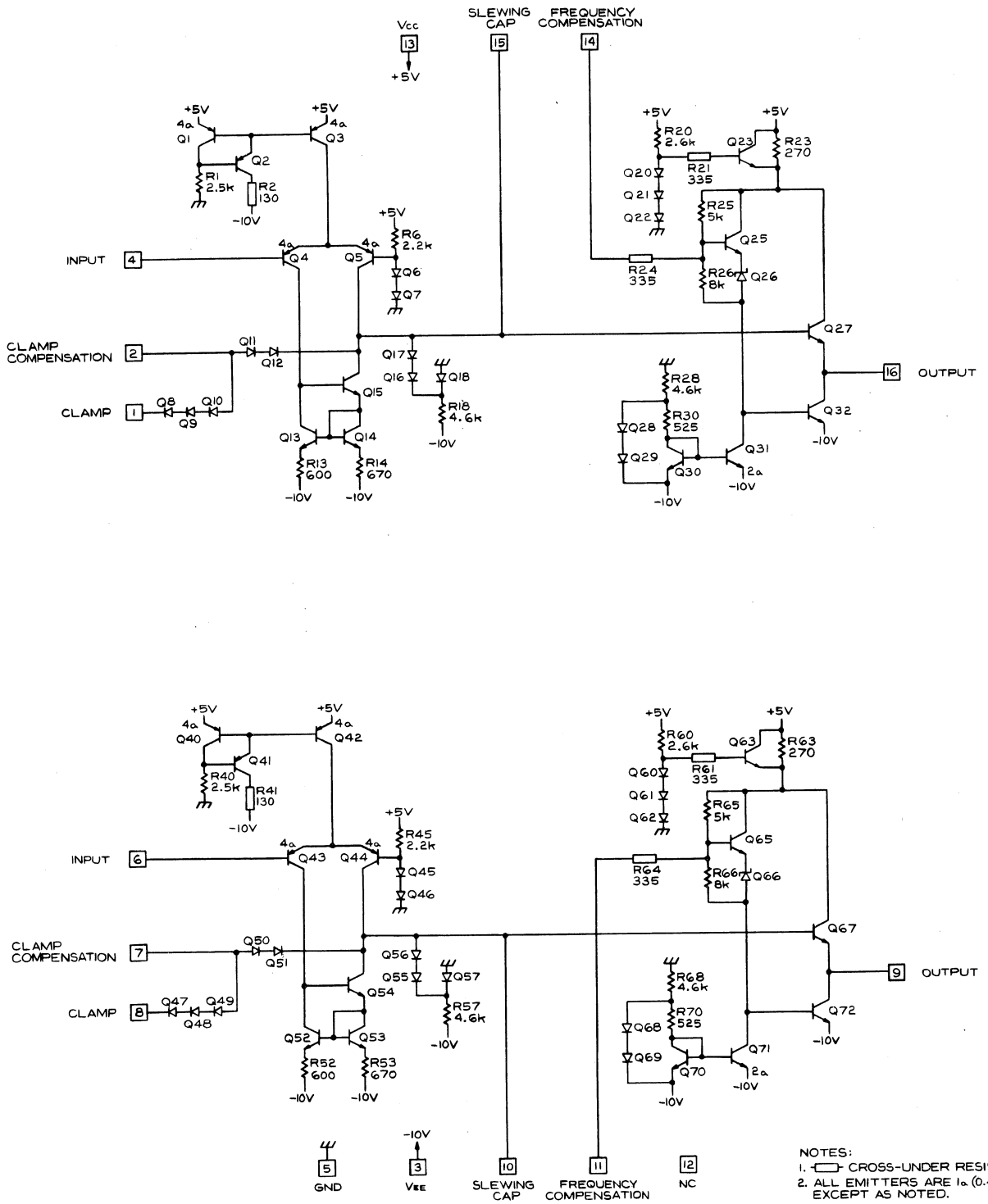

NOTES:
1. ▭ CROSS-UNDER RESISTORS.
2. ALL EMITTERS ARE 1a (0.4 mil X 0.6 mil) EXCEPT AS NOTED.

ENGR		12-29-75	PROCESS	200n/a
DWN BY	J. Langley	12-17-75	PACKAGE	16 PIN DIP
CHK BY	Linda Berger	1-15-76	DIE SIZE	51mil X 70mil
TYPE	MONOLITHIC	PULSE OUTPUT AMPLIFIER		M151A
INTEGRATED CIRCUIT ENG/MFG TEKTRONIX, INC. BEAVERTON, OREGON, U.S.A.		PART NO. 155-0145-00		

DESCRIPTION

The M152 is designed to appropriately predistort "X" and "Y" signals before they are applied to the electromagnetic deflection coils of a CRT, in such a way as to eliminate "pincushion" distortion. It also provides a signal to correct for spot de-focusing that occurs away from the screen's center. The circuit may be used in CRT's of various deflection angles (up to 90°) by adjusting the values of two external resistors.

Mathematically, the following signals are available as outputs:

$$|x|,\ |y|,\quad \sqrt{1 + (K_1X)^2 + (K_2Y)^2},$$

$$K_3 - \sqrt{1 + (K_1X)^2 + (K_2Y)^2},$$

$$\frac{X}{\sqrt{1 + (K_1X)^2 + (K_2Y)^2}},$$

$$\frac{Y}{\sqrt{1 + (K_1X)^2 + (K_2Y)^2}}$$

Where K_1, K_2, and K_3 are adjustable externally.

PROCESS	200 Ω/Sq
POWER SUPPLY.	+15V, -12V, (-15V Optional)
PACKAGE	16 DIP (Plastic)
DESIGNERS.	Binoy Rosario Harvey Golladay
INSTRUMENT USAGE	4006

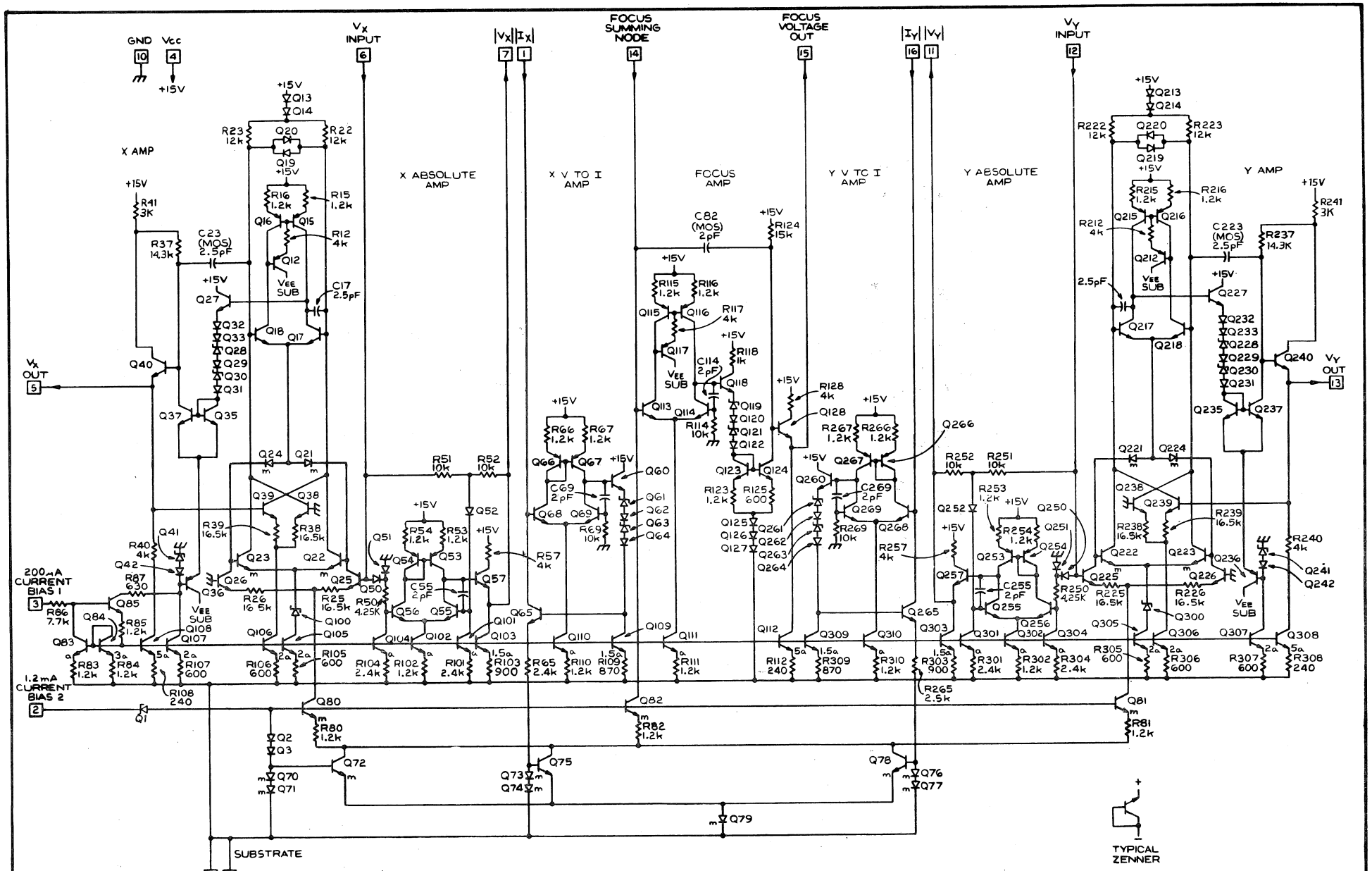

NOTE.
1. "m" INDICATES LARGE AREA EMITTER FOR IMPROVED MATCHING.
2. ALL EMITTER AREAS ARE 1a, (0.5mil X 0.6mil) UNLESS OTHERWISE INDICATED.

ENGR	Binoy Rosario	6/2/80	PROCESS	200μ/o
DWN BY	JIM NAMHIE	5/28/80	PACKAGE	16 PIN DIP
CHK BY	BOB GAULT	5-28-80	DIE SIZE	72 mil X 93 mil
TYPE	MONOLITHIC	CRT GEOMETRY CORRECTION		M152B
INTEGRATED CIRCUIT ENG/MFG TEKTRONIX, INC. BEAVERTON, OREGON, U.S.A.		PART NO. 155-0152-01		

DISPLAY MULTIPLEXER 155-0154-00 M154

DESCRIPTION

The M154 transmits one of three sets of inputs (hardcopy alpha-numeric-mode or vector-mode) in accordance with the appropriate two-bit instruction on lines "A" and "B". Each input set has "X" and "Y" channels.

A counter sequences through eight offset positions each time a "page" (erase) signal is received. These offsets are added to the "X" and "Y" inputs to uniformly exercise the phosphor on all parts of the screen.

PROCESS	200 Ω/Sq
POWER SUPPLY.	+15V, -12V (-15V Optional)
PACKAGE	20 DIP (Plastic)
DESIGNER	Harvey Golladay
INSTRUMENT USAGE	4006

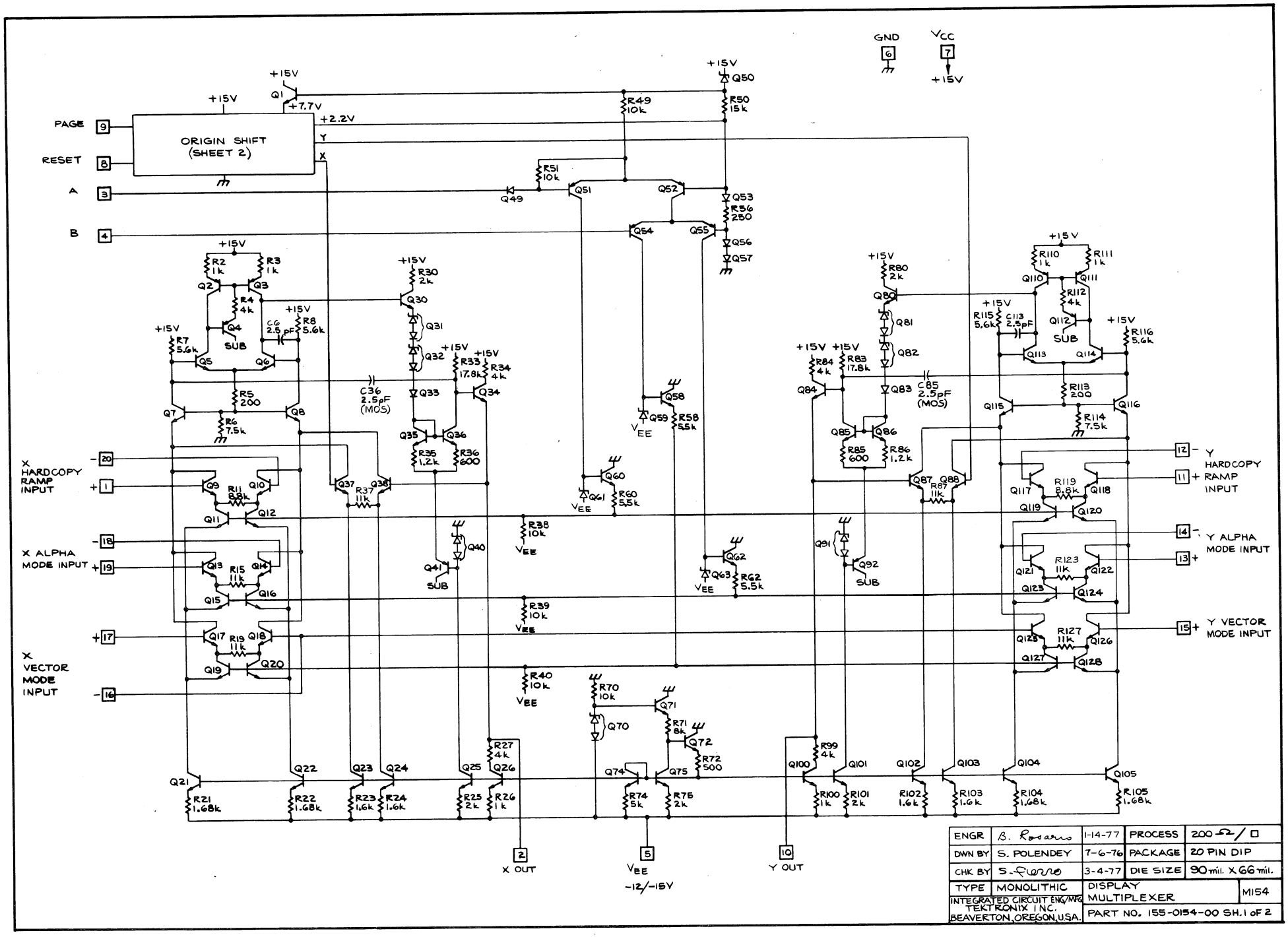

ENGR	B. Rosario	1-14-77	PROCESS	200 Ω/□
DWN BY	S. POLENDEY	7-6-76	PACKAGE	20 PIN DIP
CHK BY	S. Ferro	3-4-77	DIE SIZE	90 mil. X 66 mil.
TYPE	MONOLITHIC	DISPLAY MULTIPLEXER		M154
INTEGRATED CIRCUIT ENG/MFG TEKTRONIX INC. BEAVERTON, OREGON, U.S.A.		PART NO. 155-0154-00 SH. 1 of 2		

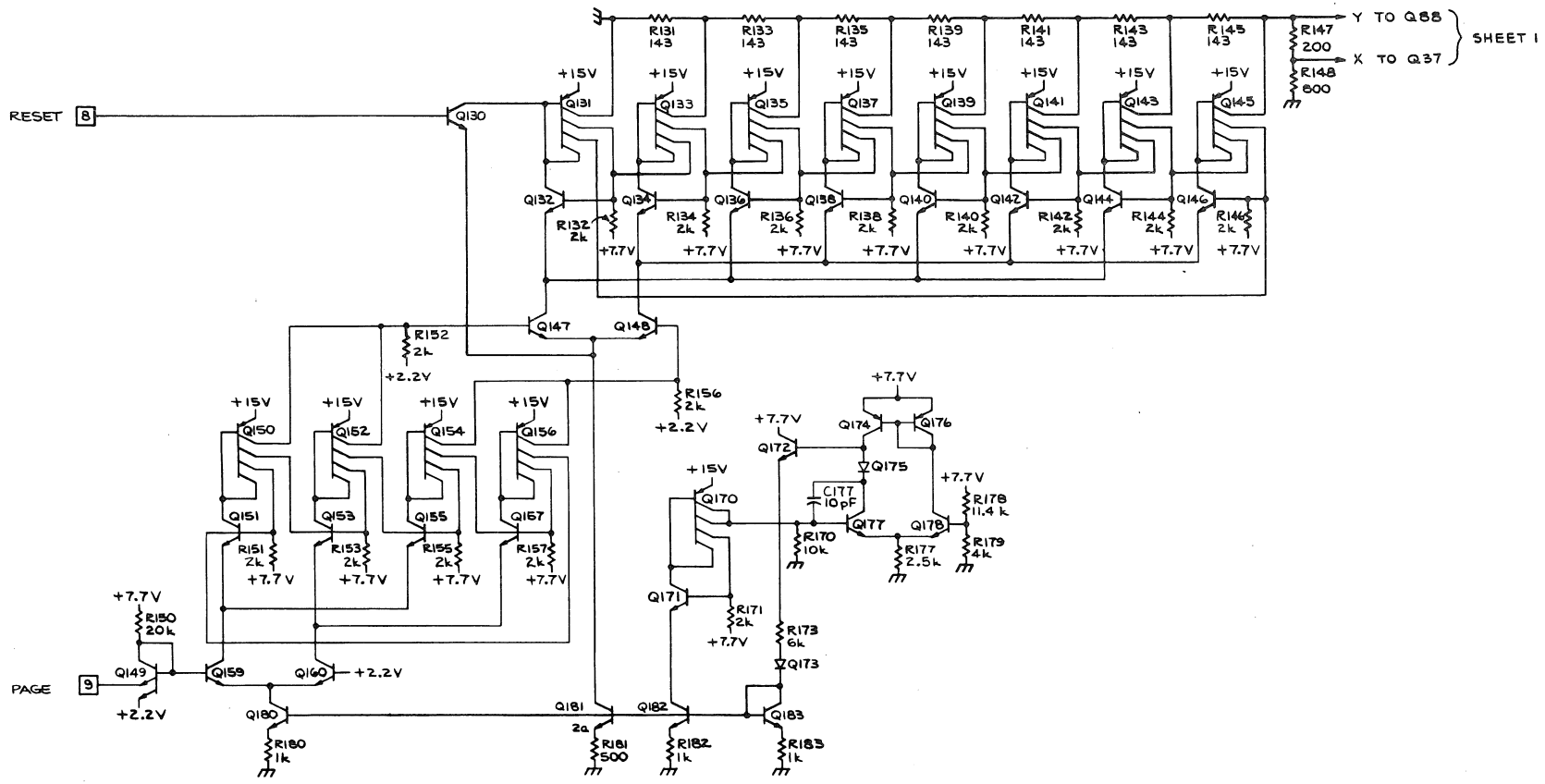

ENGR	B. Rosario	1-14-77	PROCESS	200 Ω/□
DWN BY	S. POLENDEY	7-6-76	PACKAGE	20 PIN DIP
CHK BY	S. Fiorio	3-4-77	DIE SIZE	90 mil. X 66 mil.
TYPE	MONOLITIC	DISPLAY MULTIPLEXER		M154
INTEGRATED CIRCUIT ENG/MFG TEKTRONIX INC. BEAVERTON, OREGON, U.S.A.		PART NO. 155-0154-00		SH. 2 OF 2

4-Bit FLASH A/D CONVERTER 203-0155-90 M155A

DESCRIPTION

The M155A is a 17 level digitizer (4-bits plus over-range), and is designed specifically for use in parallel-serial A/D converter systems. It consists of 16 comparator cells, digital encoding circuitry, and output drivers.

The comparators have a common input Vin and separate, monotonically increasing, reference voltages which may be derived from an external resistor string (155-0165-00/01, H508). A strobe command forces each comparator (simultaneously) to make a binary decision. Further changes in input are locked out so that the circuit functions as a digital sample-and-hold. This is done by steering a current source from the input differential pair to a cross-coupled latching pair.

Sixteen common base transistors encode the comparator output to a one-of-sixteen code which is translated to binary by 16 multiple-emitter common collector transistors. The digital data is then level shifted to the output drivers and is valid at the output within 5 nS of strobing.

The inclusion of the sixteenth comparator (over-range) makes it possible to directly combine two M155A integrated circuits for a 5-bit parallel A/D converter.

Input Range	± 1.5V OR Ø to 3V
Power Dissipation	850 mW
Output	ECL (Binary)
Maximum Clock Rate	80 MHz
Input Bandwidth	5 MHz

PROCESS	SHF II Double Layer Metal
POWER SUPPLY	+5.0V, -5.2V
PACKAGE.	TEKFORM 35000 (Hybrid) Square Metal Can
DESIGNER	Bob Nordstrom
INSTRUMENT USAGE.	

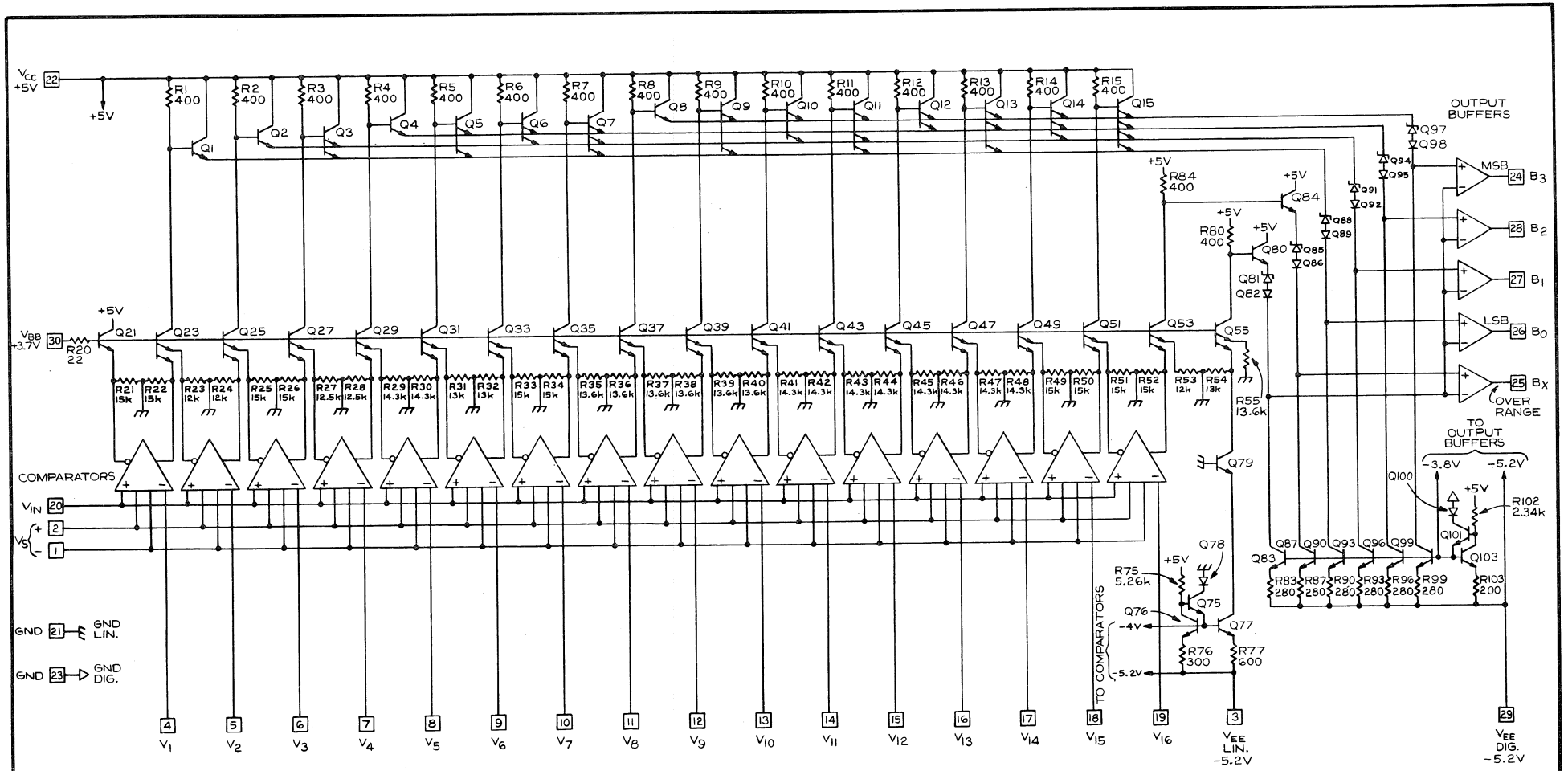

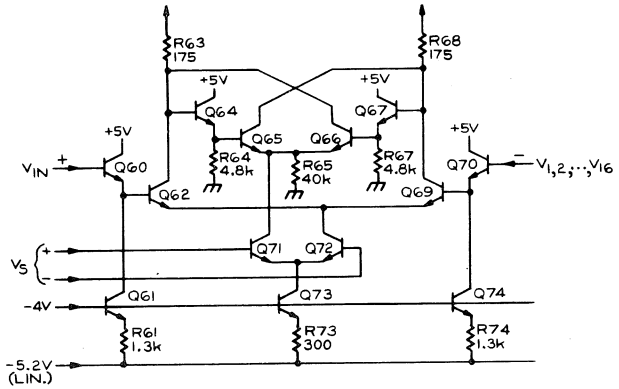

TYPICAL COMPARATOR

TYPICAL ZENER

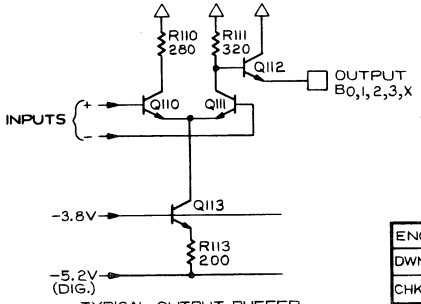

TYPICAL OUTPUT BUFFER

ENGR	R. Nolte	12-9-76	PROCESS	SHF II
DWN BY	J. Langley	10-27-76	PACKAGE	HYBRID
CHK BY	Fran Forsberg	3-7-77	DIE SIZE	75mil X 132mil
TYPE	MONOLITHIC	4-BIT FLASH A/D CONVERTER		M155A
INTEGRATED CIRCUIT ENG/MFG TEKTRONIX, INC. BEAVERTON, OREGON, U.S.A.		PART NO. 203-0155-90		

LOW POWER VERTICAL OUTPUT AMPLIFER 155-0207-00 M156

DESCRIPTION

The M156 is a Low Power Vertical Output Amplifier, Class AB, up to 50 MHz bandwidth, up to 45 volts swing per side (± 45 volt differential). Short circuit protection, output limiting and input circuit for delay line termination are on-chip.

M156 (Vertical)

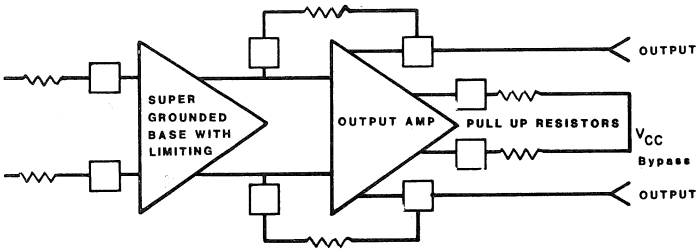

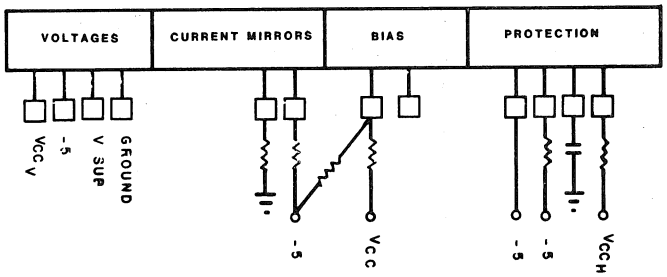

PROCESS . . . . . HVIC II

POWER SUPPLY. . . . . ± 5V, V_{CC} Up to 65V

PACKAGE . . . . . 24 DIP Ceramic or Hybrid

DESIGNER . . . . . Carl Battjes

INSTRUMENT USAGE 5223

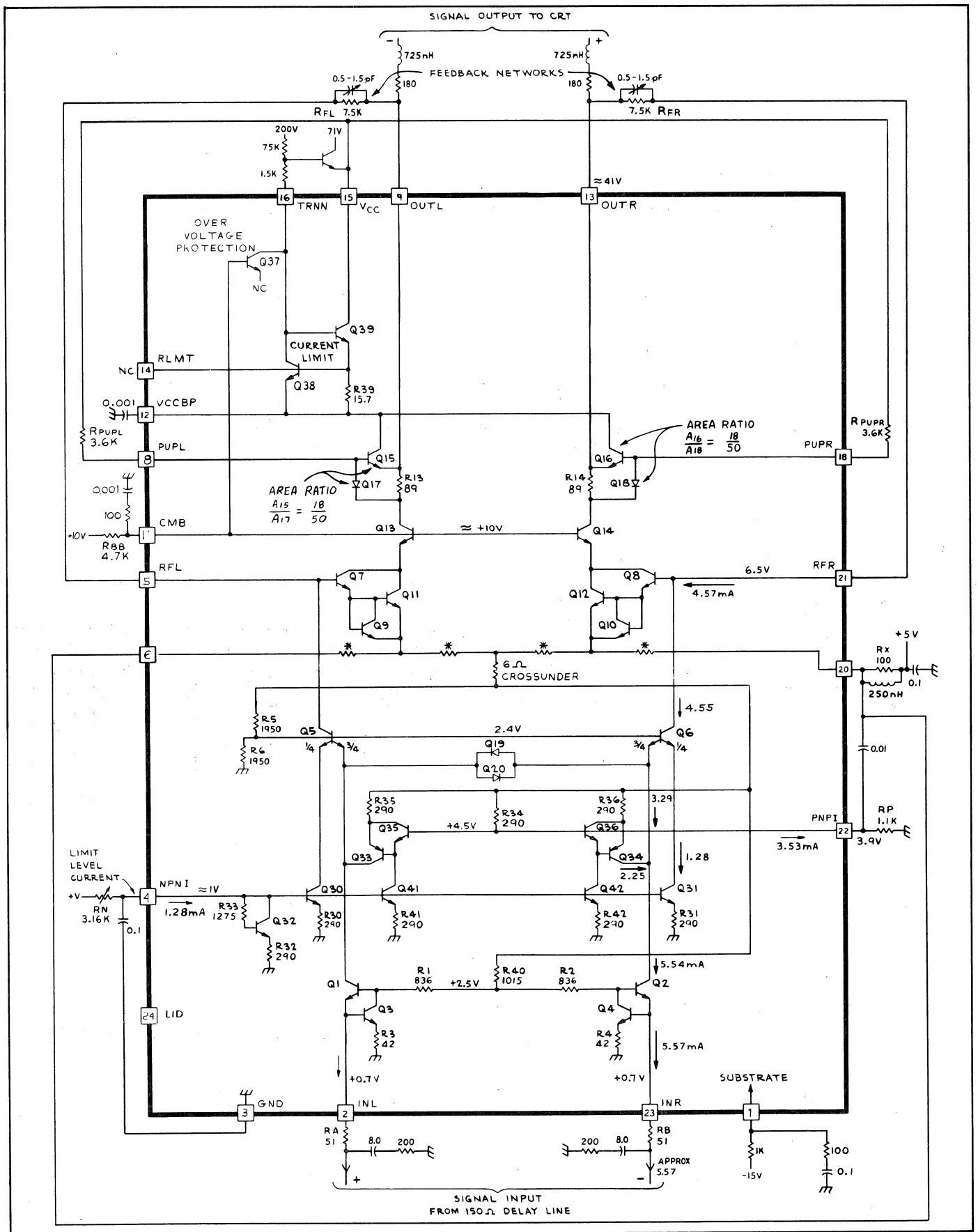

NO CONNECTION TO PIN 7, 10, 17 & 19

NOTES:
1. ☐ INDICATES PIN NUMBERS
PINS ARE NUMBERED CLOCKWISE LOOKING AT LID SURFACE OF 24 PIN CERAMIC PACKAGE
2. RESISTOR VALUES AT 25°C
3. ✱ METAL OHMS ≈ .6Ω

ENGR	Carl R Belter	1-20-77	PROCESS	HVIC II
DWN BY	R. Hankins	19NOV76	PACKAGE	24 PIN CERAMIC
CHK BY	BOB GAULT	17OCT79	DIE SIZE	55mil X 67mil
TYPE	MONOLITHIC	LOW POWER CLASS AB VERTICAL AMPLIFIER		M156
INTEGRATED CIRCUIT ENG/MFG TEKTRONIX, INC. BEAVERTON, OREGON, U.S.A.		PART NO. 155-0207-00		

TRIGGER GENERATOR 155-0151-00 M159

DESCRIPTION

This Integrated Circuit is intended for use in scopes with up to 100 MHz bandwidth. It employs SHF II processing with ECL circuitry, and requires +5 volt and -5 volt power supplies with a power dissipation of 310 mW. Low frequency sensitivity is typically 7.5 mV to 25 MHz and increases by a factor of 3 at 100 MHz. DC trigger input levels are around Ø volts. Features include slope selection, hysteresis adjustment, trigger level centering, free-run input, trigger-view outputs centered around ground, and an operational amplifier with typical open-loop gain of 500. The gate and gate complement signals are at ECL levels. A Schmitt trigger circuit accepts reset signals with slow transistions.

PROCESS	SHF II
POWER SUPPLY.	V_{CC} +5V, V_{EE} -5V
PACKAGE	20 Pin DIP (Kovar-Copper-Kovar)
DESIGNER	Gerald McMorrow
INSTRUMENT USAGE	465M

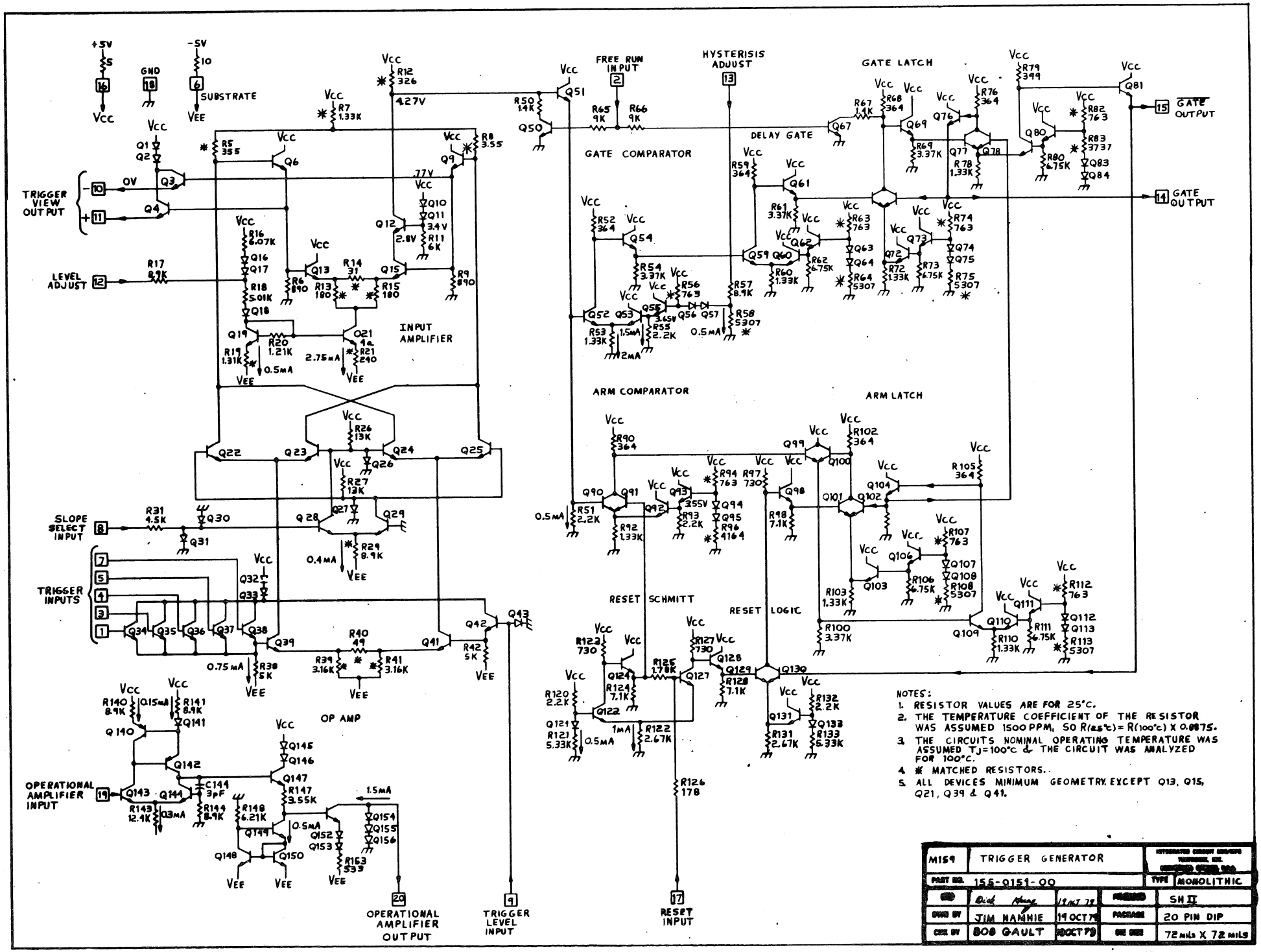

NOTES:

1. RESISTOR VALUES ARE FOR 25°C.
2. THE TEMPERATURE COEFFICIENT OF THE RESISTOR WAS ASSUMED 1500 PPM, SO R(25°C) = R(100°C) X 0.8875.
3. THE CIRCUITS NOMINAL OPERATING TEMPERATURE WAS ASSUMED TJ=100°C & THE CIRCUIT WAS ANALYZED FOR 100°C.
4. * MATCHED RESISTORS.
5. ALL DEVICES MINIMUM GEOMETRY EXCEPT Q13, Q15, Q21, Q39 & Q41.

M159	TRIGGER GENERATOR		INTEGRATED CIRCUIT SYSTEMS WAYNESBORO, VA.
PART NO.	155-0151-00	TYPE	MONOLITHIC
DSN	Dick Young 19 OCT 78	PROCESS	SH II
DWN BY	JIM NAMNIE 19 OCT 78	PACKAGE	20 PIN DIP
CHK BY	BOB GAULT 20 OCT 78	DIE SIZE	72 mils X 72 mils

CHARACTER GENERATOR

155-0023-00	M160
155-0024-00	M161
155-0025-00	M162
155-0026-00	M163
155-0027-00	M164

DESCRIPTION

This integrated circuit was designed to generate the X- and Y- waveforms corresponding to ten different alphanumeric symbols, under control of an external scanning voltage. There are four different sets of symbols, designated by the suffixes -N (numbers), -L (letters), -S (symbols) and -P (prefixes).

PROCESS . . . . . 200 Ω/Sq

POWER SUPPLY. . . . . V_{CC} +5V, V_{EE} -15V

PACKAGE . . . . . 16 DIP

DESIGNER . . . . . Barrie Gilbert

INSTRUMENT USAGE . . . . . .

5403	7603K
5440	7514
5441	7704A
5443	A7704
7313	R7704
7613	7844
7633	7903
7603	7904
7603G	7912
7603H	7504
P7001	

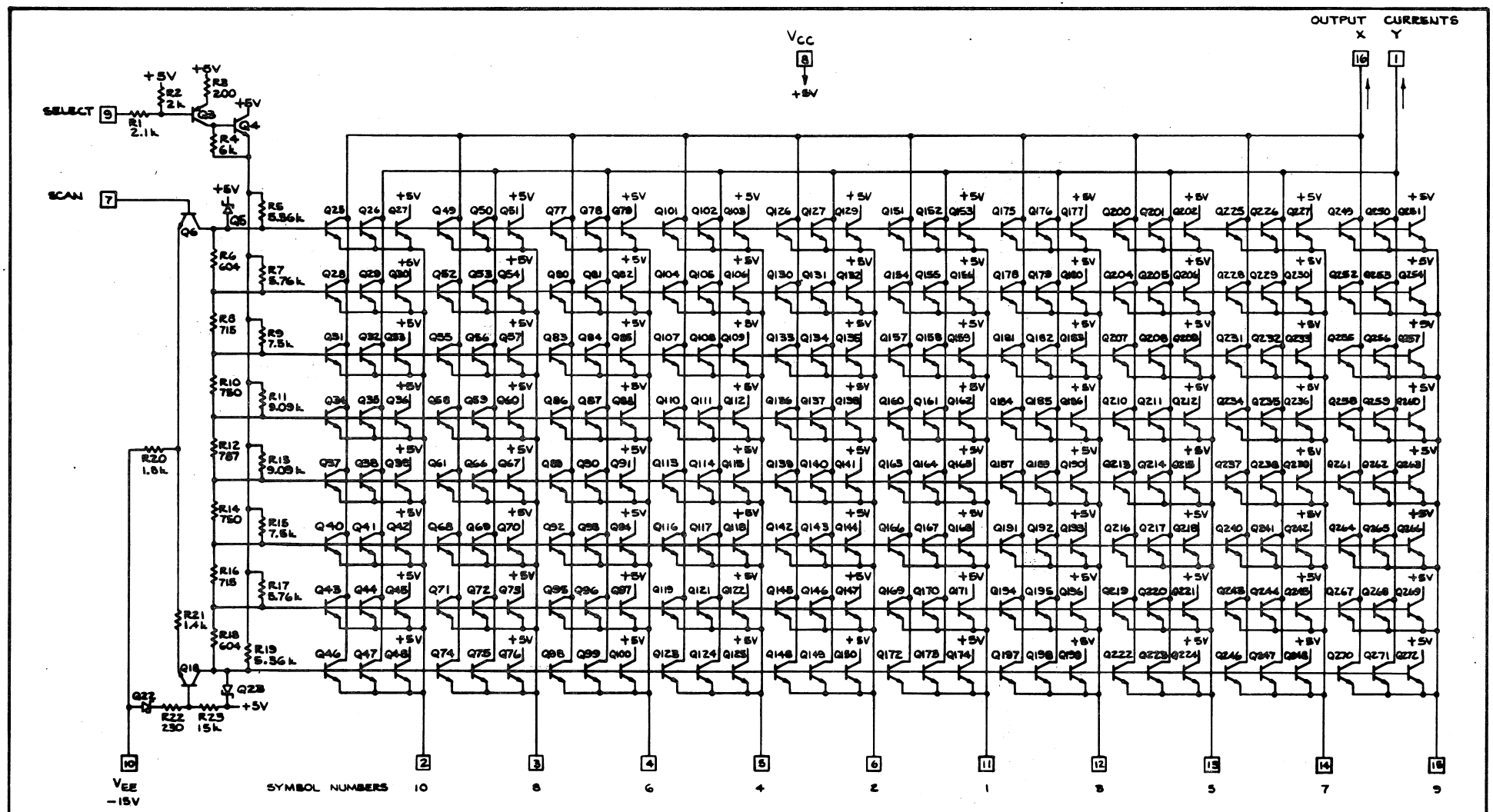

Q25 THRU Q272

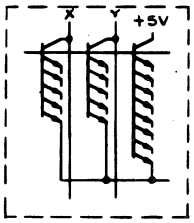

TYPICAL EMITTER CONFIGURATION (80)

SEE TABLE FOR NUMBER OF CONNECTED EMITTERS

155-0023-00 M160
155-0024-00 M161
155-0025-00 M162
155-0026-00 M163
155-0027-00 M164

ENGR	M. H. Smith	10/23/79	PROCESS	200Ω/□
DWN BY	JIM NAMHIE	10/29/79	PACKAGE	16 PIN DIP
CHK BY	BOB GAULT	10-30-79	DIE SIZE	71 mil X 75 mil
TYPE	MONOLITIC	CHARACTER GENERATOR		MIGXA
INTEGRATED CIRCUIT ENG/MFG TEKTRONIX, INC. BEAVERTON, OREGON, U.S.A.		PART NO. 155-002X-00		

LEGEND GENERATOR

155-0086-00	M165
155-0087-00	M166
155-0088-00	M167
155-0104-00	M169
155-0105-00	M170
155-0135-00	M171

DESCRIPTION

12 x 10 x 4 read only memory coupled to a 4-bit D/A converter with internal precision current sources requiring a single precision external reference. This output is directly compatible with KRO row and column data lines. The ten "memory positions" are scanned by a 4-bit B.C.D coded input which may be Ø to -15 Volt time slot data or T^2 levels or any combination thereof. The 12 "word" lines are T^2 compatible only and NEG true. Several "word lines" may be true at one time as long as memory locations (time slots) are not shared.

Intended applications are for encoding of CRT read-out directly with electrically alterable information. Other variations are possible, such as it may be used to multiplex and encode three, 4-bit words.

Programming is accomplished by inexpensive preohmic and emitter mask changes.

PROCESS . . . . . 200 Ω/Sq

POWER SUPPLY. . . . . V_{CC} ØV, V_{EE} -15V

PACKAGE . . . . . 20 DIP

DESIGNERS. . . . . Roger McCoy/Mike Metcalf

INSTRUMENT USAGE . . . . . 155-0086-00: 7D15 (R)
155-0087-00: 7D15 (C1)
155-0088-00: 7D15/7L13 (C2)
155-0104-00: 7J20 (C3/C3A)
155-0105-00: 7J20 (A/R3)

ROM PROGRAMMING - TIME SLOT

155-0086-00 M165

	0	1	2	3	4	5	6	7	8	9	10	11	12	13	14	15
1	3	4	5	10												
2	3	4	5	10												
3	3	4		10												
4	3	4		10												
5	3	4		10												
6		4		10												
7																
8																
9																
10									3	4						
11									3							
12			4	4	4	5	3	4								

155-0087-00 M166

	0	1	2	3	4	5	6	7	8	9	10	11	12	13	14	15
1	7	5	4		2											
2	6	5	4		2											
3	3	1			2											
4	2	1			2											
5	1	1			2											
6		1			2											
7						1	1	1								
8						1	1									
9						1										
10									1	1						
11									5							
12			10	2	10	2	9	1								

NOTE: The number in the square is in terms of tenths of milliamp output current. The crossed out area is not used.

ROM PROGRAMMING - TIME SLOT

155-0088-00 M167

	0	1	2	3	4	5	6	7	8	9	10	11	12	13	14	15
1		8														
2		4														
3		2														
4		1														
5					7											
6					6											
7					5											
8			8													
9			4													
10			2													
11			1													
12									10							

155-0104-00 M169

	0	1	2	3	4	5	6	7	8	9	10	11	12	13	14	15
1							3		1	5						
2					3		1	5	1	1						
3					2		1	3	1	1						
4							5		1	9						
5							3		1	5						
6							2		1							
7					2		1		1							
8							6		1							
9							3		1							
10							2		1							
11				5	5											
12				4	4											

NOTE: The number in the square is in terms of tenths of milliamp output current. The crossed out area is not used.

ROM PROGRAMMING - TIME SLOT

155-0105-00 M170

	0	1	2	3	4	5	6	7	8	9	10	11	12	13	14	15
1			9	9		9										
2				9												
3				9												
4			9	9		9										
5			9	9		9										
6			9													
7																
8			9													
9			9													
10			9													
11									2	2						
12									4	4						

155-0135-00 M171

		0	1	2	3	4	5	6	7	8	9	10	11	12	13	14	15
	1				1	1	1	1									
	2				2	2	2	2									
	3				4	4	4	4									
	4				8	8	8	8									
W	5	1															
	6	2															
O	7								1								
	8								2								
R	9		6														
	10		1														
D	11			10													
	12	10															

NOTE: The number in the square is in terms of tenths of milli-amp output current. The crossed out area is not used.

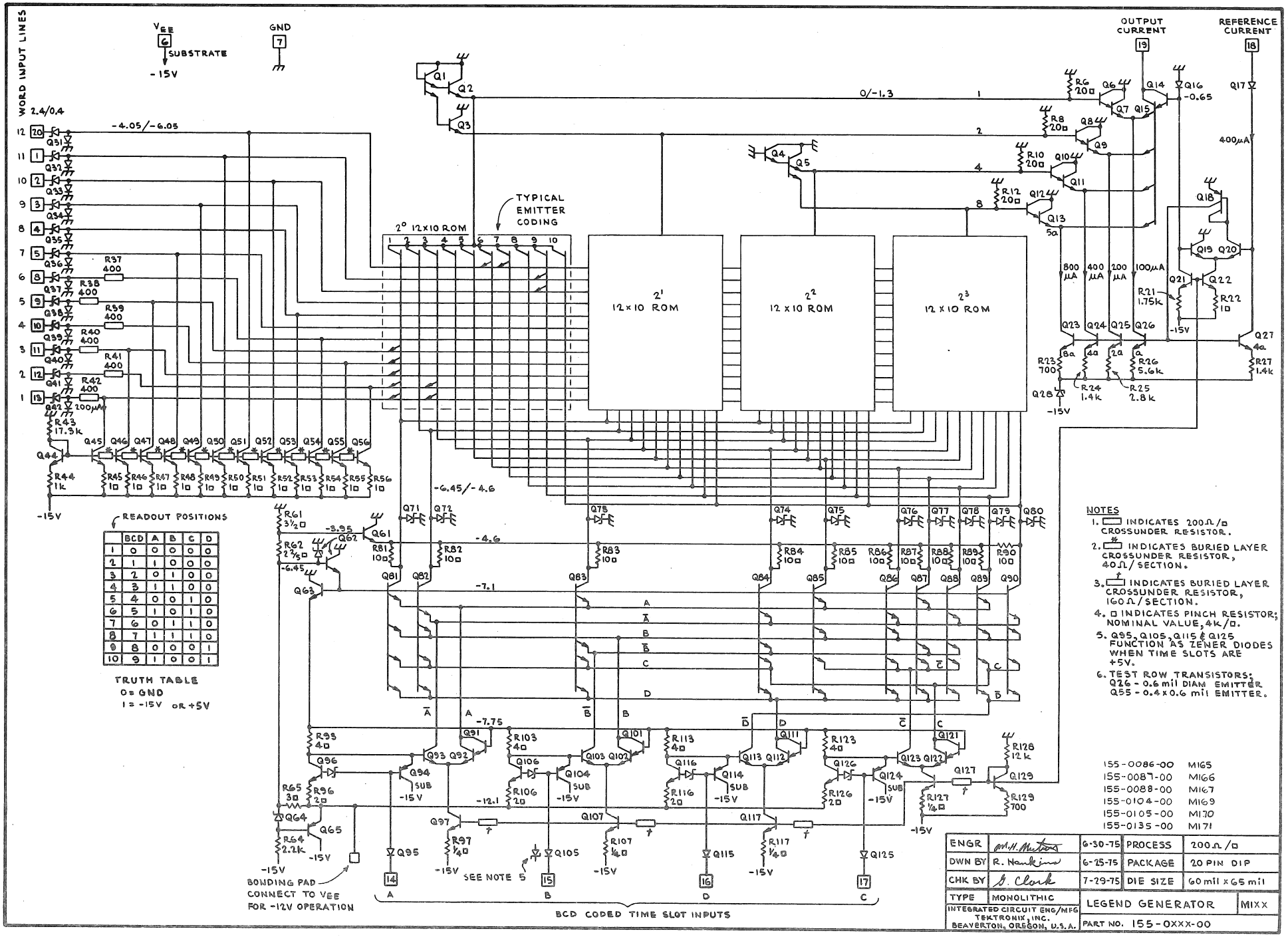
WORD INPUT LINES
VEE
SUBSTRATE
-15V
GND
OUTPUT CURRENT
REFERENCE CURRENT
TYPICAL EMITTER CODING
2° 12x10 ROM
2¹ 12x10 ROM
2² 12x10 ROM
2³ 12x10 ROM
READOUT POSITIONS
TRUTH TABLE
0 = GND
1 = -15V OR +5V
BONDING PAD CONNECT TO VEE FOR -12V OPERATION
SEE NOTE 5
BCD CODED TIME SLOT INPUTS
NOTES
1. INDICATES 200Ω/□ CROSSUNDER RESISTOR.
2. INDICATES BURIED LAYER CROSSUNDER RESISTOR, 40Ω/SECTION.
3. INDICATES BURIED LAYER CROSSUNDER RESISTOR, 160Ω/SECTION.
4. □ INDICATES PINCH RESISTOR; NOMINAL VALUE, 4K/□.
5. Q95, Q105, Q115 & Q125 FUNCTION AS ZENER DIODES WHEN TIME SLOTS ARE +5V.
6. TEST ROW TRANSISTORS: Q26 - 0.6 mil DIAM EMITTER Q55 - 0.4 x 0.6 mil EMITTER.
155-0086-00 M165
155-0087-00 M166
155-0088-00 M167
155-0104-00 M169
155-0105-00 M170
155-0135-00 M171
ENGR
DWN BY R. Nankin 6-25-75
CHK BY 6-29-75
TYPE MONOLITHIC
PROCESS 200Ω/□
PACKAGE 20 PIN DIP
DIE SIZE 60 mil x 65 mil
INTEGRATED CIRCUIT ENG/MFG TEKTRONIX, INC. BEAVERTON, OREGON, U.S.A.
LEGEND GENERATOR
MIXX
PART NO. 155-0XXX-00

DESCRIPTION

Each M175 integrated circuit contains two complete strobed voltage comparators. A strobed comparator is different from the more familiar continous duty comparator in that comparison decisions are made only on the strobe edge. This is a high performance component for clock-driven A/D converters, logic analyzer inputs, and digital test systems.

Internally each comparator is arranged in a master-slave configuration which holds the output data valid for a complete clock cycle. Output is a fixed current steered through either collector of a pair of common base NPN transistors. The output current will give sufficient voltage at the remote end of properly terminated transmission lines to accurately drive ECL or TTL differential line recievers. Strobe inputs are level shifted and attenuated differential ECL signals. Only a few hundred millivolts of strobe inputs are needed to operate the comparators. Though full ECL swings can be used, this unnecessarily brings large signal transients onto the die. For the strobe low input, the Master stage functions as a wide-band differential cascode amplifier. The Slave stage now performs as an amplifier in transmitting the decision state of the Master to the outputs. On return to strobe low input, the Slave stage latches and holds these outputs until the next time that the strobe input goes high. Intended voltage supplies are Ø.Ø volts and -12.0 volts. Intended voltage inputs are -6.38 ± 0.125 volts. Voltage supply and input levels can be shifted together as needed for other applications. In doing so, the user must take care that the strobe inputs and current outputs will function correctly. Wider input voltage swings are allowed within the positive limit of the cascode bias volate and the negative limit of the current source and switch. Signal distortion and slew rate limiting will occur as usual for a small signal amplifier driven outside of its linear region.

Comparison Decision Time	< 500 pS
Strobe Maximum Repetition Rate (Period) . . .	200 MHz (95 nS)
Input Bandwidth (As An Amplifier)	> 800 MHz
Input Resolution Plus Offset	± 5 mV or Less
Input Range.	± 125 mV Around -6.38V
Output	8 mA Through Either Of Two Common-Base Buffer Transistors
Power.	1.2 Watts

PROCESS	SHF III
POWER SUPPLY	Ø - 12 Volts, 100 mA
PACKAGE	Hybrid
DESIGNER.	Steve Wetterling
INSTRUMENT USAGE	7612D

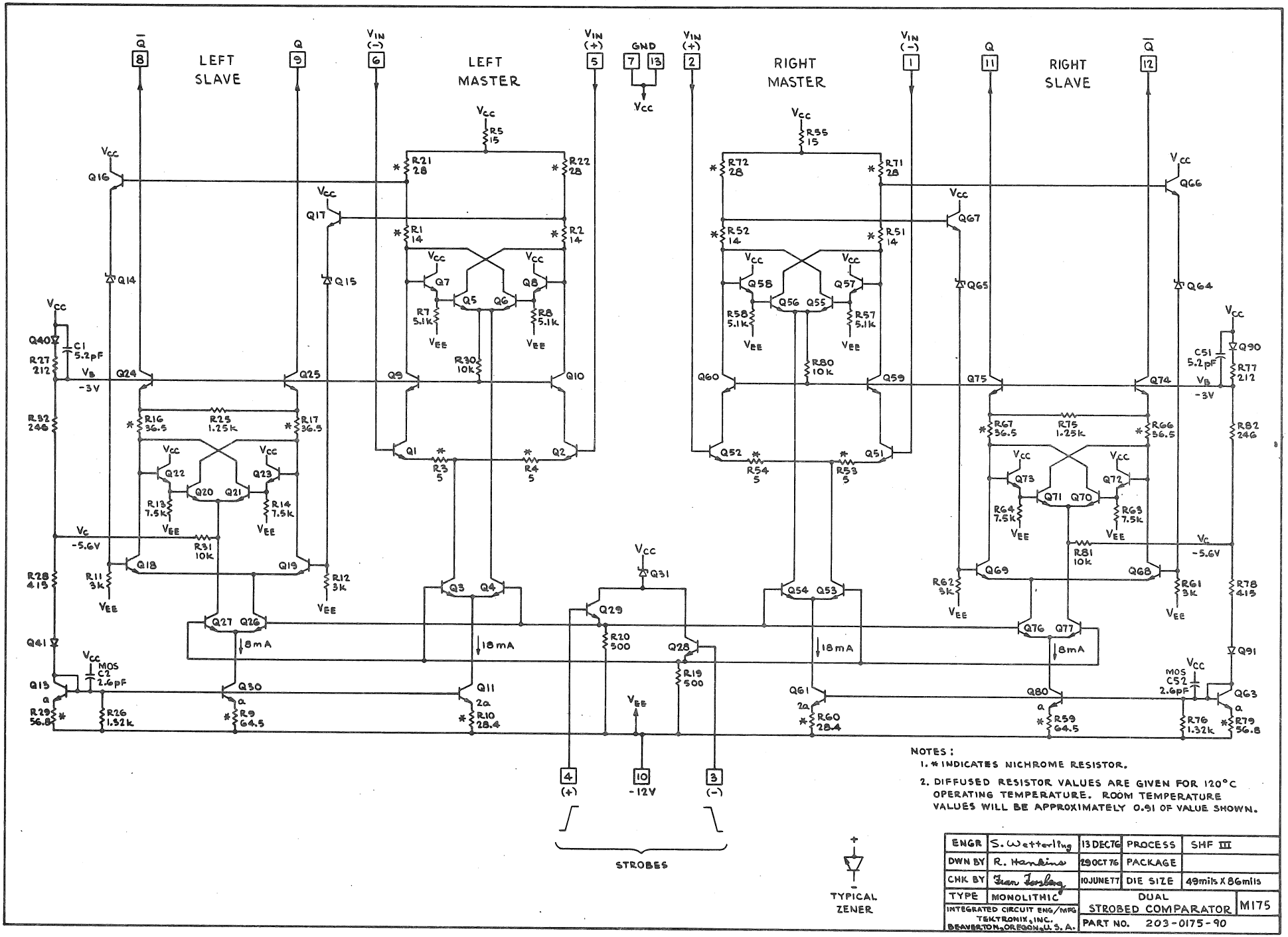

NOTES:

1. * INDICATES NICHROME RESISTOR.
2. DIFFUSED RESISTOR VALUES ARE GIVEN FOR 120°C OPERATING TEMPERATURE. ROOM TEMPERATURE VALUES WILL BE APPROXIMATELY 0.91 OF VALUE SHOWN.

ENGR	S. Wetterling	13 DEC 76	PROCESS	SHF III
DWN BY	R. Hamline	29 OCT 76	PACKAGE	
CHK BY	Jean Forsberg	10 JUNE 77	DIE SIZE	49 mils X 86 mils
TYPE	MONOLITHIC	DUAL STROBED COMPARATOR		M175
INTEGRATED CIRCUIT ENG/MFG TEKTRONIX, INC. BEAVERTON, OREGON, U.S.A.		PART NO. 203-0175-90		

DESCRIPTION

The M177A is a 5-Bit DAC designed for use with the 203-0155-90 (M155A) in parallel-serial A/D converter systems. Five precision binarily-scaled current sources are independently switched to either I or $\overline{I}$ according to the ECL digital input word. I and $\overline{I}$ are supplementary current outputs with a voltage compliance of -1.6 to +3.1 volts. Switching is done by an emitter-coupled pair driven differentially by an amplifier which converts the single-ended input to a level-shifted differential drive. Two unswitched LSB current sources are provided for a particular application. Settling time to 8-bits with a 240 Ω, 10 pF load is 15 ns.

A reference current equal to 1/2 I (MSB) is set up with an external resistor, voltage reference, and op-amp. I (MSB) is designed to be 12.8 mA. Binarily-weighted emitter resistors are required and are provided by 155-0167-01 (H710). Maximum accuracy is achieved by functionally trimming these resistors, dropping several volts across them, and operating the outputs into a fixed voltage.

The M177A is operated between ground and -5.2 volts with typical power dissipation of 240 mW depending on usage.

PROCESS . . . . . SHF II

POWER SUPPLY. . . . . -5.2 Volts

PACKAGE . . . . . 16 Pin TO-8 Can

DESIGNERS. . . . . Stew Taylor/Bob Nordstrom

INSTRUMENT USAGE . . . . . .

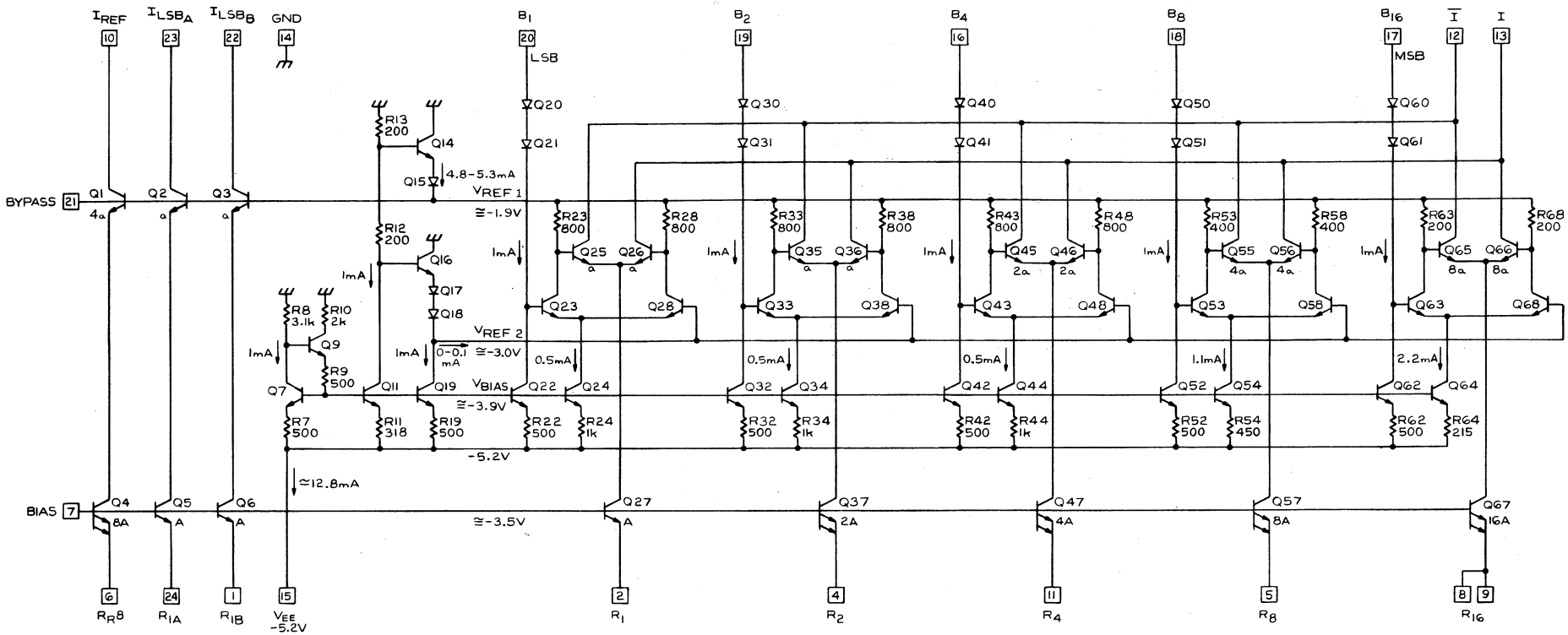

ENGR	R. Taylor R. Hoskin	12-9-76	PROCESS	SHF II
DWN BY	J. Langley	11-1-76	PACKAGE	HYBRID
CHK BY	Fran Forsberg	3-4-77	DIE SIZE	83mil X 45mil
TYPE	MONOLITHIC	5-BIT D/A CONVERTER		M177A
INTEGRATED CIRCUIT ENG/MFG TEKTRONIX, INC. BEAVERTON, OREGON, U.S.A.		PART NO. 203-0177-90		

DESCRIPTION

The M180 and M181 acquire a low speed, low repetition rate waveform, store the waveform in a digital form, and then redisplay the waveform at a higher rate. Also, the waveform may be digitally processed to provide several types of displays. The waveform is segmented into 1024 horizontal locations. An eight bit vertical value is computed for each horizontal location and stored in an external RAM. The memory can be split into two smaller memories of 512 locations. One waveform can be retained for comparison with a waveform acquired later.

The M180 constantly digitizes a waveform using the successive approximation technique. All vertical values are summed for a single horizontal location. The number of vertical values is counted. These two numbers are divided giving an average value. Also, the largest vertical value is retained. The process begins anew at each horizontal location. The largest value or the average value is then selected and stored. The selected value can be compared with the current memory content and the larger of the two stored.

The M181 determines the horizontal position using a 10-Bit tracking ADC. A programmable logic array in the M181 controls the display. The user can display either half of the memory, both halves interlaced, or the algebraic difference between the two halves. The M181 controls the addressing of memory. Provisions exist for external circuitry to read and modify the memory.

Either circuit by itself is useless, but the two together form a complete digital package. The memory and the analog portion of the A/D and D/A converters are external.

PROCESS	PSF (AMI MOS)
POWER SUPPLY.	+5/50 mA, -5/50 mA, -15/10 μA
PACKAGE	40 Pin Dual-In-Line
DESIGNER	Don Kirkpatrick
INSTRUMENT USAGE	7L5 7L13 7L18 49X

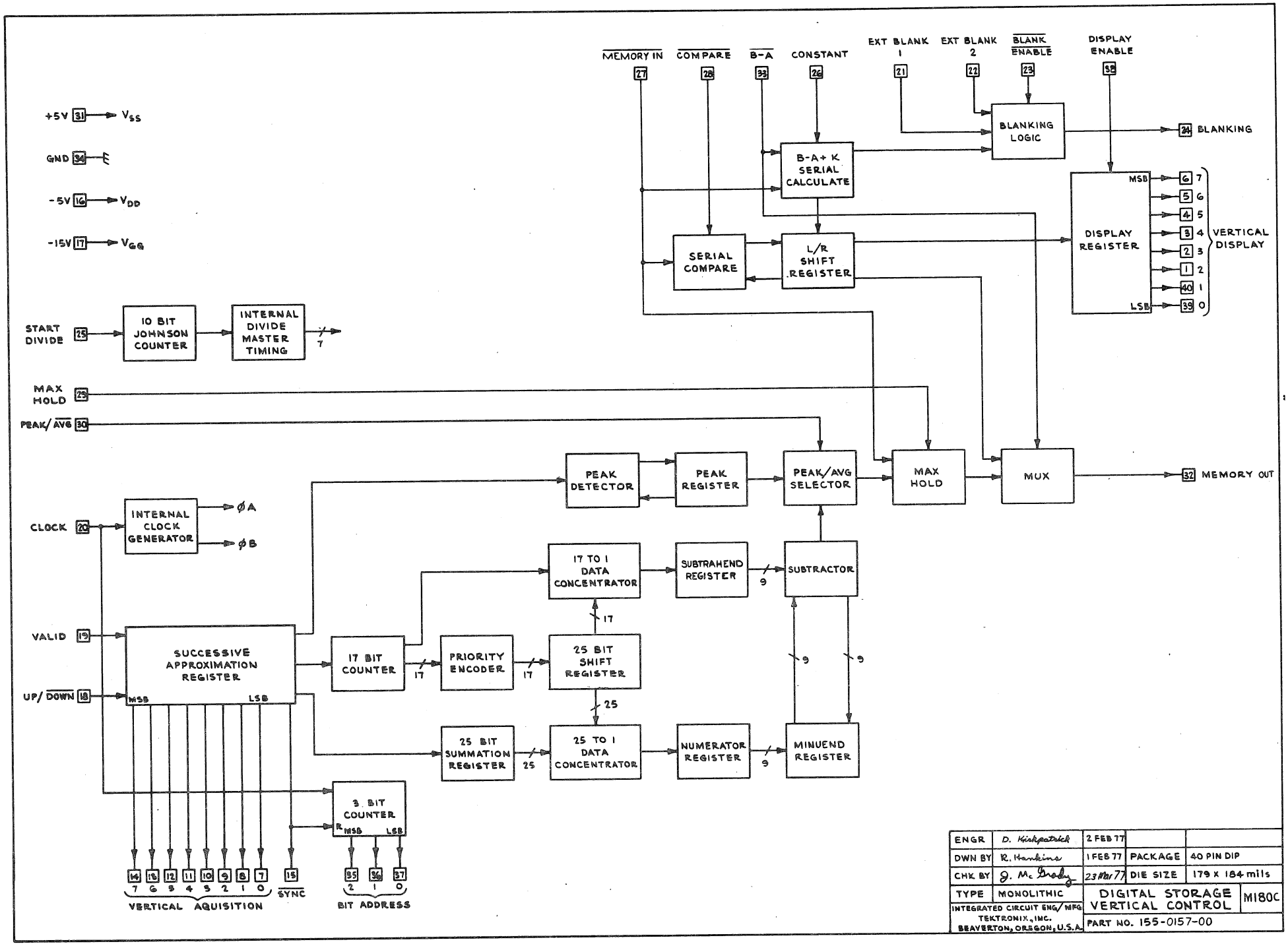

ENGR	D. Kirkpatrick	2 FEB 77		
DWN BY	R. Hankins	1 FEB 77	PACKAGE	40 PIN DIP
CHK BY	J. McGrady	23 Mar 77	DIE SIZE	179 x 184 mils
TYPE	MONOLITHIC	DIGITAL STORAGE VERTICAL CONTROL		M180C
INTEGRATED CIRCUIT ENG/MFG TEKTRONIX, INC. BEAVERTON, OREGON, U.S.A.		PART NO. 155-0157-00		

DIGITAL STORAGE HORIZONTAL CONTROL 155-0158-00 M181

DESCRIPTION

This circuit MUST be used with the 155-0157-00 (M180). Refer to 155-0157-00 (M180) for a complete description.

PROCESS	PSF (AMI MOS)
POWER SUPPLY.	+5/40 mA, -2/40 mA, -15/10 μA
PACKAGE	40 Pin Dual-In-Line
DESIGNER	Don Kirkpatrick
INSTRUMENT USAGE	7L5 7L13 7L18 49X

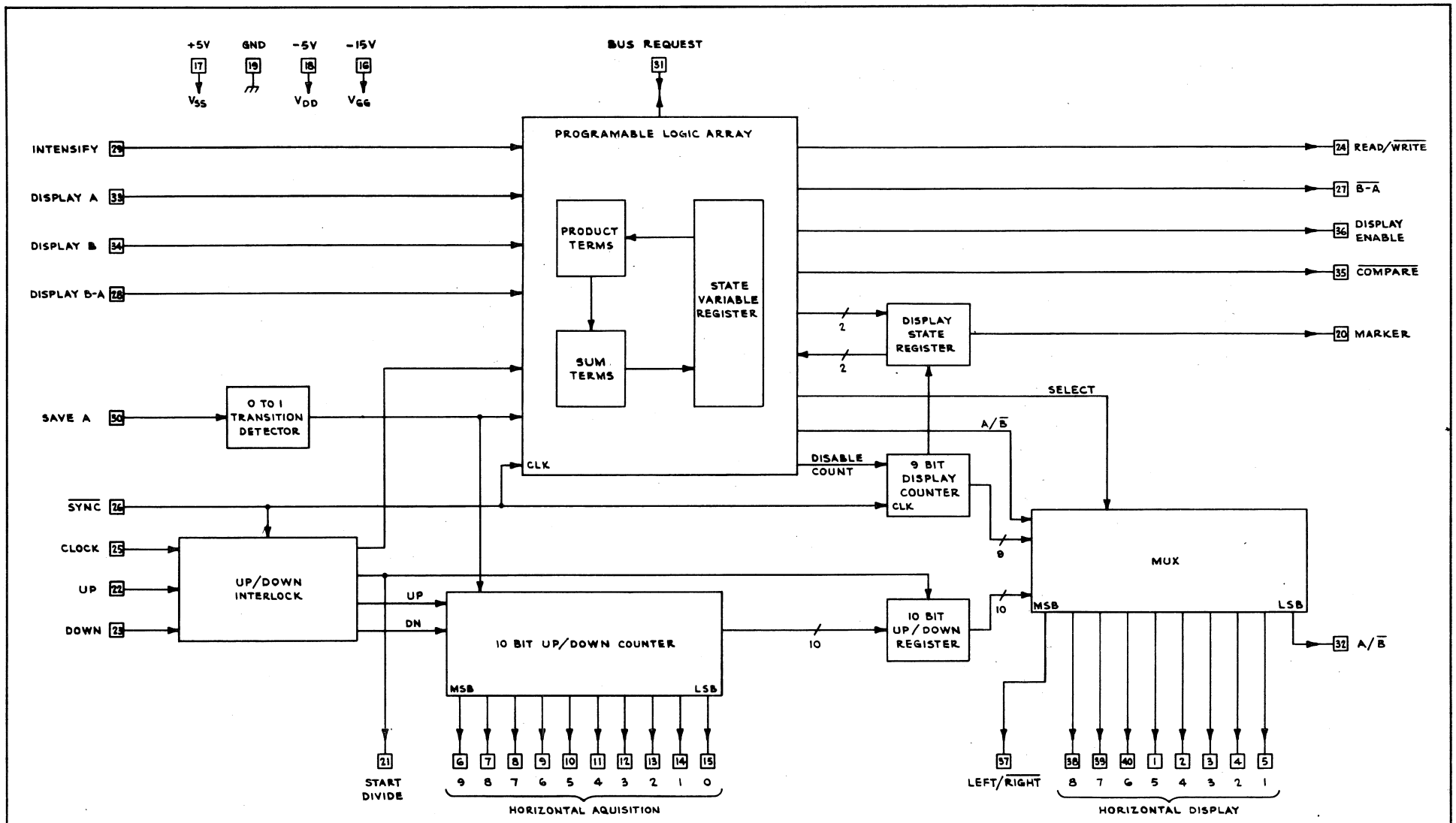

ENGR	D. Kirkpatrick	7 FEB 77		
DWN	R. Hankins	4 FEB 77	PACKAGE	40 PIN DIP
CHK	J. McGrady	22 Nov. 77	DIE SIZE	130 X 151 mils
TYPE	MONOLITHIC	DIGITAL STORAGE HORIZONTAL CONTROL		M181C
INTEGRATED CIRCUIT ENG/MFG TEKTRONIX, INC. BEAVERTON, OREGON, U.S.A.		PART NO. 155-0158-00		

4-DECADE DVM 155-0185-00 M187

DESCRIPTION

When used with an integrator, comparator, and switchable current source, the M187 forms a complete DVM. The integrated circuit can internally divide the output values by 1, 2, 4, or 5. Two output pins indicate when the counters have over-ranged or under-ranged. The frequency of the on-chip clock is determined by an external capacitor and resistor. The output from the integrated circuit is a 10-level current suitable for interfacing with the New Generation Knob Read-Out System.

PROCESS	I^2L
POWER SUPPLY.	V_{CC} +5V, V_{EE} -15V
PACKAGE	20 DIP
DESIGNER	Don Larson
INSTRUMENT USAGE	7B15

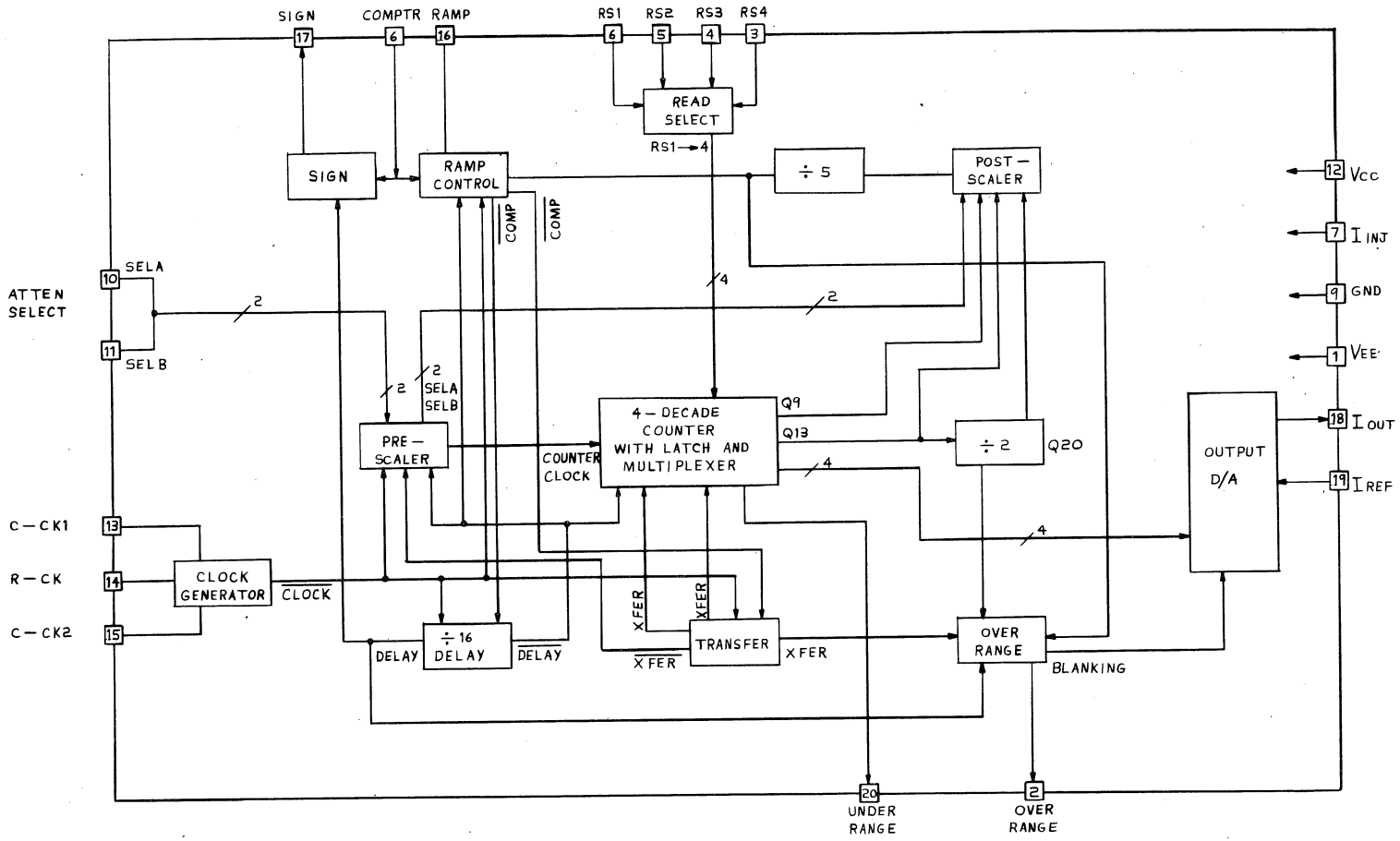

M187	FOUR DECADE D.V.M.			INTEGRATED CIRCUIT ENG/MFG TEKTRONIX, INC. BEAVERTON, OREGON, U.S.A.	
PART NO.	155-0185-00			TYPE	MONOLITIC
ENG	D. Allen	11-1-79		PROCESS	I^2L
DWN BY	JIM NAMHIE	10/31/79		PACKAGE	20 PIN DIP
CHK BY	BOB GAULT	11-1-79		DIE SIZE	90MILS X 135MILS

TV SYNC GENERATOR 155-0188-00 M192

DESCRIPTION

The M192 is a multi-standard broadcast television sync generator. It can be programmed for NTSC, PAL, or PAL M timing standards.

Outputs include sync signals required for television broadcasting, timing for various test signals, and a synchronous counter chain from 65H to H. All outputs are derived from a 5 MHz input clock.

PROCESS	CMOS I
POWER SUPPLY.	V_{DD} +10 Volts
PACKAGE	40 DIP
DESIGNER	Don Larson
INSTRUMENT USAGE	1410 1411 1412 1470 1474 143 3240 (GVG)

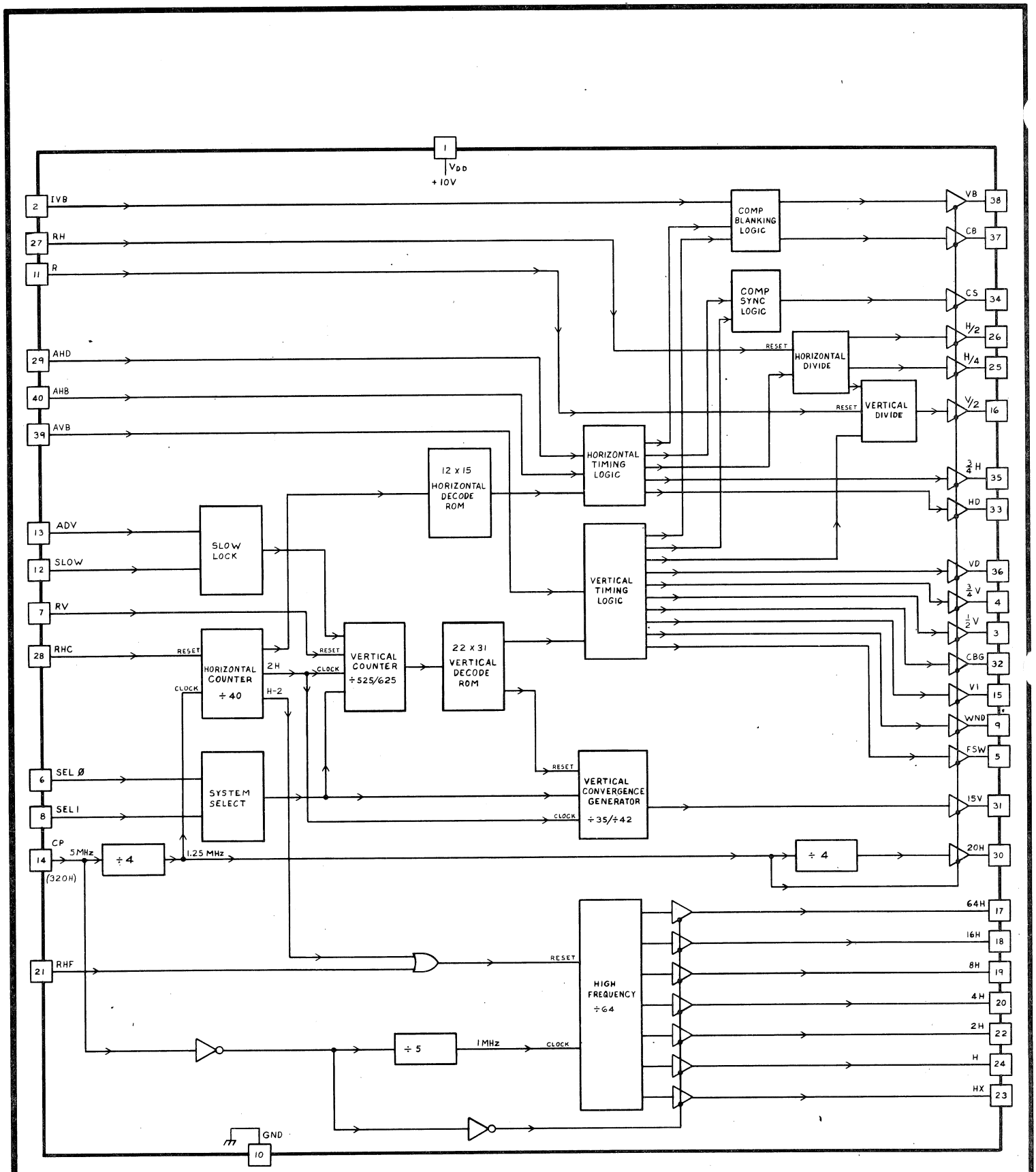

M192	TV SYNC GENERATOR		INTEGRATED CIRCUIT ENG/MFG TEKTRONIX, INC. BEAVERTON, OREGON, U.S.A.	
PART NO. 155-0188-00			TYPE	MONOLITHIC
ENG	R. Gausa	28SEPT78	PROCESS	CMOS
DWN BY	Wyatt Smith	28 Sep. 78	PACKAGE	40-PIN DIP
CHK BY	BOB GAULT	28SEPT78	DIE SIZE	172 x 159 mils

DISCRETE DEVICES

BY CIRCUIT NUMBER

TITLE	PART NUMBER	CIRCUIT
Schottky Diode	204-0677-90	D32
NPN Transistor	204-0565-90	D58
NPN Transistor	204-0566-90	D75
Tear Tab Schottky Diode	204-0553-90	D84
PNP Transistor	204-0625-90	D102
Darlington Photo Transistor	204-0676-90	D113
Diode Array	204-0757-00	D143
NPN Transistor	204-0707-90	D156
NPN Transistor	204-0746-90	D180
Microwave Transistor	204-0753-90	D186
High Current Bipolar Transistor	204-0792-90	D206

DISCRETE DEVICES

BY PART NUMBER

TITLE	CIRCUIT	PART NUMBER
Tear Tab Schottky Diode	D84	204-0553-90
NPN Transistor	D58	204-0565-90
NPN Transistor	D75	204-0566-90
PNP Transistor	D102	204-0625-90
PNP Transistor	D113	204-0676-90
Schottky Diode	D32	204-0677-90
NPN Transistor	D156	204-0707-90
NPN Transistor	D180	204-0746-90
Microwave Transistor	D186	204-0753-90
Diode Array	D143	204-0757-90
High Current Bipolar Transistor	D206	204-0792-90

INTEGRATED CIRCUITS ENGINEERING/MANUFACTURING CONTACTS

BY CIRCUIT NUMBER

ICE CONTACT	ICM CONTACT	PART NUMBER	CIRCUIT
Krishna Verma	Hal Lillywhite	204-0677-00	D32
Krishna Verma	Steve Fierro	204-0565-90	D58
Krishna Verma	Steve Fierro	204-0566-90	D75
Krishna Verma	Hal Lillywhite	204-0553-90	D84
Krishna Verma	Steve Fierro	204-0625-90	D102
Krishna Verma	Steve Fierro	204-0676-90	D113
Krishna Verma	Hal Lillywhite	204-0757-90	D143
Krishna Verma	Steve Fierro	204-0707-90	D156
Krishna Verma	Steve Fierro	204-0746-90	D180
Krishna Verma	Steve Fierro	204-0753-90	D186
Krishna Verma	Steve Fierro	204-0792-90	D206

NPN TRANSISTOR 204-0565-90 D58

DESCRIPTION

A Tek made transistor (NPN) used in the 155-0080-00 (H125). It will carry a reasonably high current (100 mA to 120 mA) and has an f_T near 900 MHz.

Beta (120 mA and 4 Volts)	>40
I_{CES} (at 5 Volts)	<70 μA
BV_{CEO} (at 1 mA).	>35 Volts
BV_{CBO} (at 1 mA).	>50 Volts
f_T	Approximately 900 MHz

DESIGNER . . . . . Mike Dickman

INSTRUMENT USAGE . . . . . .

NPN TRANSISTOR 204-0566-90 D75

DESCRIPTION

A Tek made transistor (NPN) used in the 7L12 and 7L13 Oscillators. and may be used as an amplifier in the 155-0068-00 (H101). It has an output capacitance (C_{OB}) of about 0.8 pF at 6 volts and an f_T of about 3 GHz.

Beta (5 mA and 5 Volts)	100
BV_{CBO} (at 1 mA).	15 Volts
LV_{CEO} (at 1 mA).	8 Volts
f_T	3 GHz
C_{OC} (at 6 Volts)	0.8 pF

DESIGNER . . . . . Mike Dickman

INSTRUMENT USAGE 7L12
7L13

TEAR TAB SCHOTTKY DIODE 204-0553-90 D84

DESCRIPTION

The D84 is a Tear Tab Diode Schottky Diode chip with a die size of 0.030 x 0.045 inches. The maximum allowable forward current is 11 mA

Electrical Parameters

PARAMETER	CONDITIONS	TYPICAL	MIN	MAX
R_f	I_f = 10 mA	8 Ω		20 Ω
C	Ø Bias, 1 MHz	0.1 pF		
V_B	1 μA	8 Volts	5 Volts	

DESIGNER . . . . . Krishna Verma

INSTRUMENT USAGE S6

PNP TRANSISTOR 204-0625-90 D102

DESCRIPTION

A Tek made transistor (PNP) used as a protection device in the 155-0113-00 (H116) Logic Probe for the 203-0096-90 (M96). It will carry 150 mA at 5 volts and has a very low leakage current.

Beta (150 mA and 5 Volts)	>40
I_{CES} (at 25 Volts).	<50 μA
BV_{CEO} (at 100 μA)	>32 Volts
BV_{CBO} (at 100 μA)	>32 Volts

DESIGNER . . . . . Krishna Verma

INSTRUMENT USAGE . . . . . .

DARLINGTON PHOTO TRANSISTOR 204-0676-90 D113

DESCRIPTION

A Darlington photo transistor made using the standard 200 Ω/sq process. The emitter is internally shorted to the substrate while the collectors are isolated so that it may be scribed into common emitter arrays. The device is normally operated open base but a base contact pad is provided. The device responds to visible and infrared radiation with a peak efficiency around 0.7 μm.

Composite Beta (6 Volts, 1 mA)	1,600 to 10,000
I_{CEO} (Dark, V_{CE} = 8 Volts)	<0.1 μA
BV_{CEO} (10 μA) Typical	15 Volts
I_{MAX}	> 5 mA
V_{CESAT} (1 mA) Typical	1.1 Volt

PROCESS	200 Ω/Sq
DESIGNER	Bob Nordstrom
INSTRUMENT USAGE	

DESCRIPTION

This device was designed as a target for the T7610 EBS Digitizer tube, which is used in the 7612D Waveform Digitizer instrument. The die is approximately 250 x 40 mils. in size and contains 10 adjacent diodes, each 230 mils. long by 1.26 mils. wide, formed by a boron diffusion on an N-Type epitaxial substrate. The active area of the diodes is covered by a pattern of thick and thin aluminum in the form of a digital gray code.

For the Digitizer application, die are attached to an alumina substrate which is mounted on a special header and sealed to an electron tube. In operation the diodes are reverse biased and bombarded by an electron beam. An output signal is obtained from a diode when the beam penetrates a thin metal area. The combined outputs of all of the diodes provides an 8-bit digital code which is dependent on the beam position.

Forward Bias (at 1 mA)	1 Volt Maximum
Reverse Bias Breakdown (at 1 μA)	30 Volts Maximum
Reverse Leakage (20 Volt Bias).	30 μA Maximum
Interdiode Leakage (at 10 Volts)	100 μA Maximum
Diode Capacitance (11.5 Volt Bias)	5 pF Maximum

DESIGNER . . . . . Ray Hayes

INSTRUMENT USAGE 7612D

NPN TRANSISTOR 204-0707-90 D156

DESCRIPTION

A Tek made transistor (NPN) for high voltage, common base applications requiring a gain bandwidth product of 1 GHz.

P_D (V_{CE} = 30 Volts, T_j = < 200°C). . . . . 3 Watts*

f_T (V_{CE} = 14 Volts, I_C = 160 mA) . . . . . 1 GHz

C_{CB} (V_{CB} = 4 Volts) . . . . . 2.5 pF

*Guaranteed safe operating area

DESIGNER . . . . . Krishna Verma

INSTRUMENT USAGE . . . . . .

NPN TRANSISTOR 204-0746-90 D180

DESCRIPTION

The D180 is a Tek made power (NPN) transistor. It has a totem pole configuration for Z-axis drive in the 7104 and Z-axis drive for RASCAL (IDG).

DC

BV_{CBO}	150 Volts
I_C	150 mA
C_{CB}	2.0 pF at 10 Volts
LV_{CEO}	80 Volts
h_{FE} (5 Volts, 100 mA)	30
Safe Operating	Approximately 5 Watts

RF

f_T	500 MHz, 1.0 GHz
t_r	700 pS (7904)

DESIGNER . . . . . Krishna Verma

INSTRUMENT USAGE. 7104
7904

MICROWAVE TRANSISTOR 204-0753-90 D186

DESCRIPTION

The D186 is a Tek made microwave transistor (NPN) with a low noise level.

DC

BV_{CBO}	25 Volts
I_C	70 mA
C_{CB}	0.9 pF at 10 Volts
LV_{CEO}	12 Volts

RF

f_T	7.5 GHz
f_{MAX}	18 GHz
NF	2.5 dB at 2 GHz 4.3 dB at 4 GHz
$\|S_{21}\|^2$	9 dB at 2 GHz 3 dB at 4 GHz

DESIGNER . . . . . Krishna Verma

INSTRUMENT USAGE TR501
TR502

HIGH CURRENT BIPOLAR TRANSISTOR 204-0792-90 D206

DESCRIPTION

The D206 is a NPN high current bipolar silicon transistor. It is designed and developed as a CCD clockdriver for fast clock rate. However, this device can be used in microwave power amplifier and oscillator application.

DC

BV_{CBO}	35 Volts
I_C	400 mA
LV_{CEO}	15 Volts
C_{CB} (at 4 Volts)	7 pF

RF

f_T (5 Volts, 150 mA)	Approximately 4 GHz

DESIGNER . . . . . Krishna Verma

INSTRUMENT USAGE . . . . . .

HYBRID CIRCUITS

BY CIRCUIT NUMBER

TITLE	PART NUMBER	CIRCUIT
Vertical Output Amplifier	155-0125-00	H074B
Vertical Output Amplifier	155-0115-00	H106A
Vertical Output Amplifier	155-0168-00	H126
Diode Leveler	155-0107-00	H204
Trigger Circuit	155-0150-00	H473
Horizontal Clamp	155-0179-00	H475
Amplifier	155-0175-00	H476
Vertical Output Amplifier	155-0176-00	H477
Horizontal Output	155-0178-00	H488
Input Protection Circuit	155-0180-00	H489
5-Channel Data Acquisition	155-0137-00	H493
Input Amplifier	155-0181-00	H500
4-Bit Parallel A/D Converter MSB	155-0165-00	H508-1
4-Bit Parallel A/D Converter	155-0165-01	H508-2
Diode Pulse Shaper	155-0182-00	H575
Vertical Preamplifier Gain Switch	155-0161-00	H616
Differential Detector	155-0183-00	H672
5-Bit ECL D/A Converter	155-0167-01	H710
8-Bit D/A Converter	155-0169-00	H719

HYBRID CIRCUITS

BY PART NUMBER

TITLE	CIRCUIT	PART NUMBER
Diode Level	H204	155-0107-00
Vertical Output Amplifier	H106A	155-0115-00
Vertical Output Amplifier	H074B	155-0125-00
5-Channel Data Acquisition	H493	155-0137-00
Trigger Circuit	H473	155-0150-00
Vertical Preamplifier Gain Switch	H616	155-0161-00
4-Bit Parallel A/D Converter MSB	H508-1	155-0165-00
4-Bit Parallel A/D Converter	H508-2	155-0165-01
5-Bit ECL D/A Converter	H710	155-0167-01
Vertical Output Amplifier	H126	155-0168-00
8-Bit D/A Converter	H719	155-0169-00
Amplifier	H476	155-0175-00
Vertical Output Amplifier	H477	155-0176-00
Horizontal Output	H488	155-0178-00
Horizontal Clamp	H475	155-0179-00
Input Protection Circuit	H489	155-0180-00
Input Amplifier	H500	155-0181-00
Diode Pulse Shaper	H575	155-0182-00
Differential Detector	H672	155-0183-00

HYBRID CIRCUITS ENGINEERING/MANUFACTURING CONTACTS

BY CIRCUIT NUMBER

HCE CONTACT	HCM CONTACT	PART NUMBER	CIRCUIT
David A. Miller	Jim Wood	155-0125-00	H074B
Oscar Olson	Pete McReynolds	155-0115-00	H106A
David A. Miller	Pete McReynolds	155-0168-00	H126
Dale Hartman	Dan Murphy	155-0107-00	H204
David A. Miller	Jim Wood	155-0150-00	H473
David A. Miller	Dan Murphy	155-0179-00	H475
David A. Miller	Dan Murphy	155-0175-00	H476
David A. Miller	Dan Murphy	155-0176-00	H477
David A. Miller	Jim Wood	155-0178-00	H488
David A. Miller	Dan Murphy	155-0180-00	H489
Oscar Olson	Pete McReynolds	155-0137-00	H493
David A. Miller	Dan Murphy	155-0181-00	H500
David A. Miller	Pete McReynolds	155-0165-00	H508-1
David A. Miller	Pete McReynolds	155-0165-01	H508-2
David A. Miller	Jim Wood	155-0182-00	H575
David A. Miller	Pete McReynolds	155-0161-00	H616
David A. Miller	Jim Wood	155-0183-00	H672
David A. Miller	Pete McReynolds	155-0167-01	H710
Oscar Olson	Pete McReynolds	155-0169-00	H719

VERTICAL OUTPUT AMPLIFIER 155-0125-00 H074B

DESCRIPTION

The H074B is a hybrid consisting of an Integrated Circuit (M080) and two discrete transistors. Output amplifier for Pulse Generator

Equivalent band pass - 200 MHz.

Refer to 203-0080-90 M080

PROCESS . . . . . Thick-Film

POWER SUPPLY. . . . . ± 15 Volts and +40 Volts

PACKAGE . . . . . 12 Pin TO-8

DESIGNER . . . . . Mike Reiney

INSTRUMENT USAGE PG502

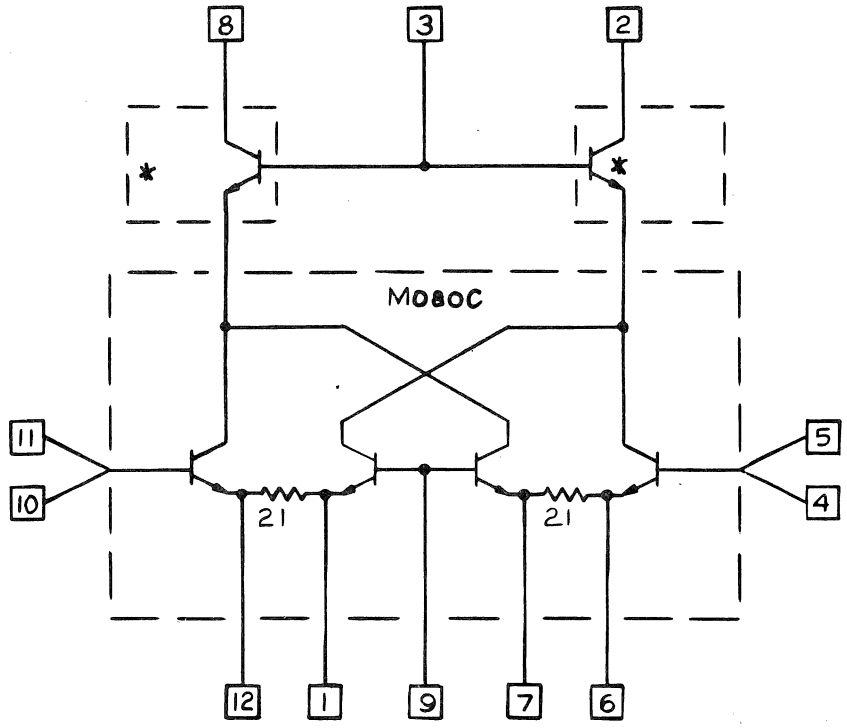

* 153-0640-00
SELECTABLE TRANSISTORS

H074B

OUTLINE DRAWING NOT AVAILABLE AT THIS TIME

VERTICAL OUTPUT AMPLIFIER 155-0115-00 H106A

DESCRIPTION

The H106A is a Integrated Circuit/Transistor Hybrid designed specically as a Vertical Deflection Plate Driver in a CRT enabling a bandwidth of DC to 100 MHz.

Refer to 203-0089-90 M089

PROCESS	Thin-Film
POWER SUPPLY.	+15 Volts
DESIGNER	Oscar Olson
PACKAGE	TO-8
INSTRUMENT USAGE	464 465B 466

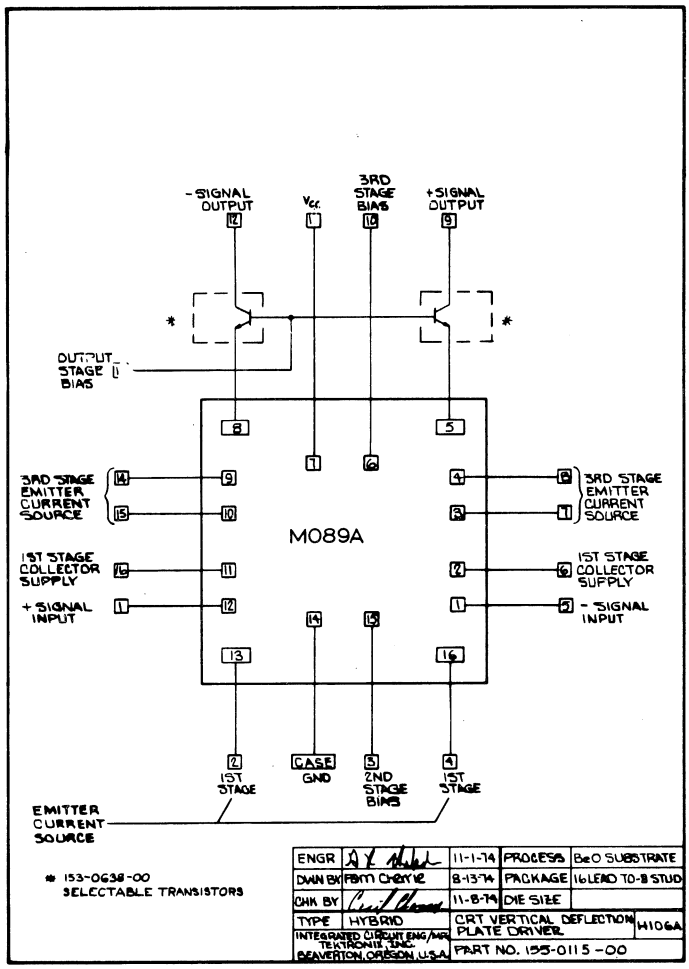

OUTLINE DRAWING NOT AVAILABLE AT THIS TIME

VERTICAL OUTPUT AMPLIFIER 155-0168-00 H126

DESCRIPTION

The H126A is a Integrated Circuit/Transistor Hybrid designed specifically as a Vertical Deflection Plate Driver for the 475A Portable Oscilloscope. The bandwidth required by this instrument is DC to 250 MHz.

Refer to 203-0102-90 M102

PROCESS	Thin-Film
POWER SUPPLIES	+15 Volts, +55 Volts
PACKAGE	16 Pin TO-8
DESIGNER	Einar Traa
INSTRUMENT USAGE	475A

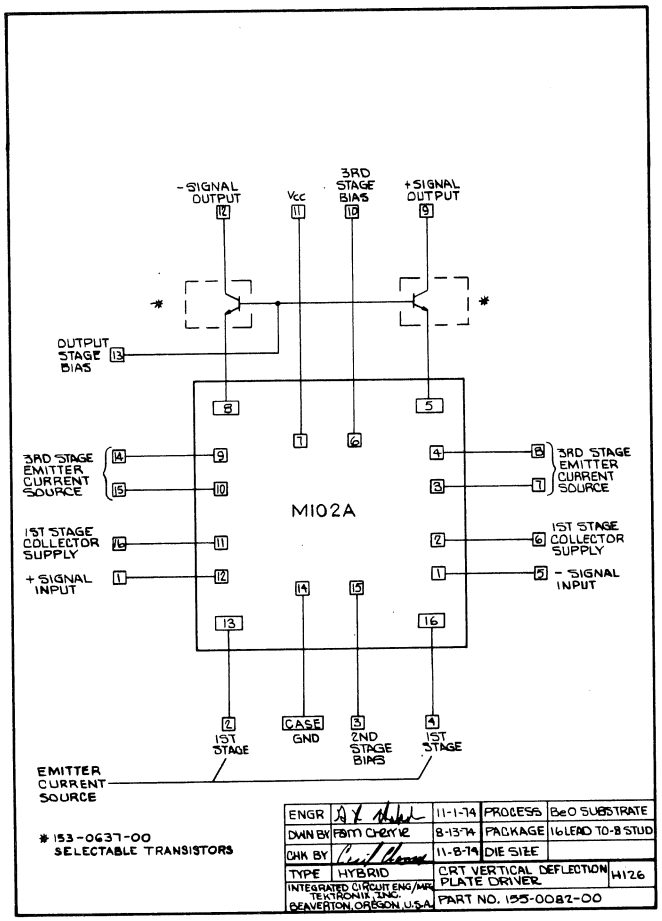

OUTLINE DRAWING NOT AVAILABLE AT THIS TIME

DIODE LEVELER 155-0107-00 H204

DESCRIPTION

The H204 is a leveling circuit whose DC output is approximately equal to the peak-tp-peak voltage at its input leveling point. The H204 circuitry provides frequency response compensation for the SG503 attenuator circuit board and 50 Ω cable.

PROCESS . . . . . Thick-Film

POWER SUPPLY. . . . . .

PACKAGE . . . . . .

DESIGNER . . . . . Dale Hartman

INSTRUMENT USAGE SG503

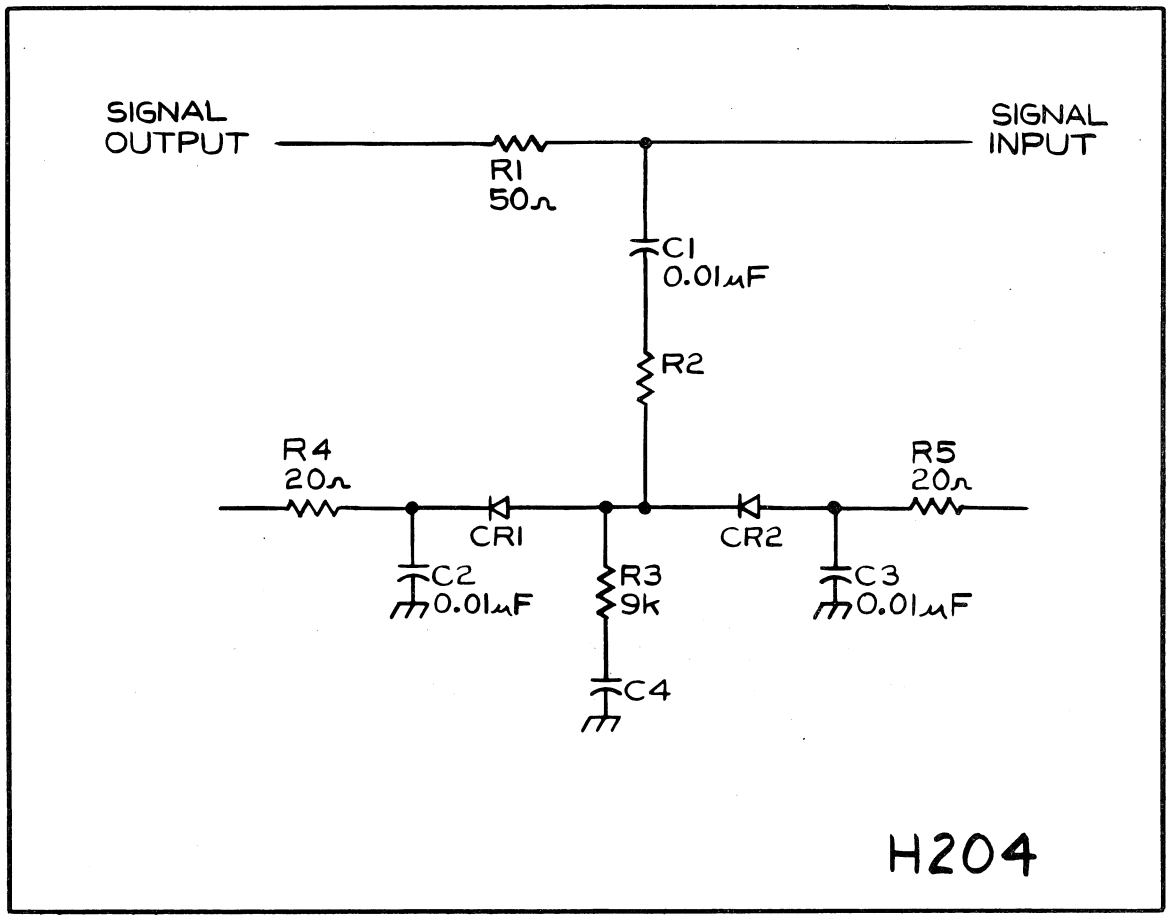
SIGNAL OUTPUT
SIGNAL INPUT
R1 50Ω
C1 0.01μF
R2
R4 20Ω
R5 20Ω
CR1
CR2
C2 0.01μF
R3 9k
C3 0.01μF
C4
H204

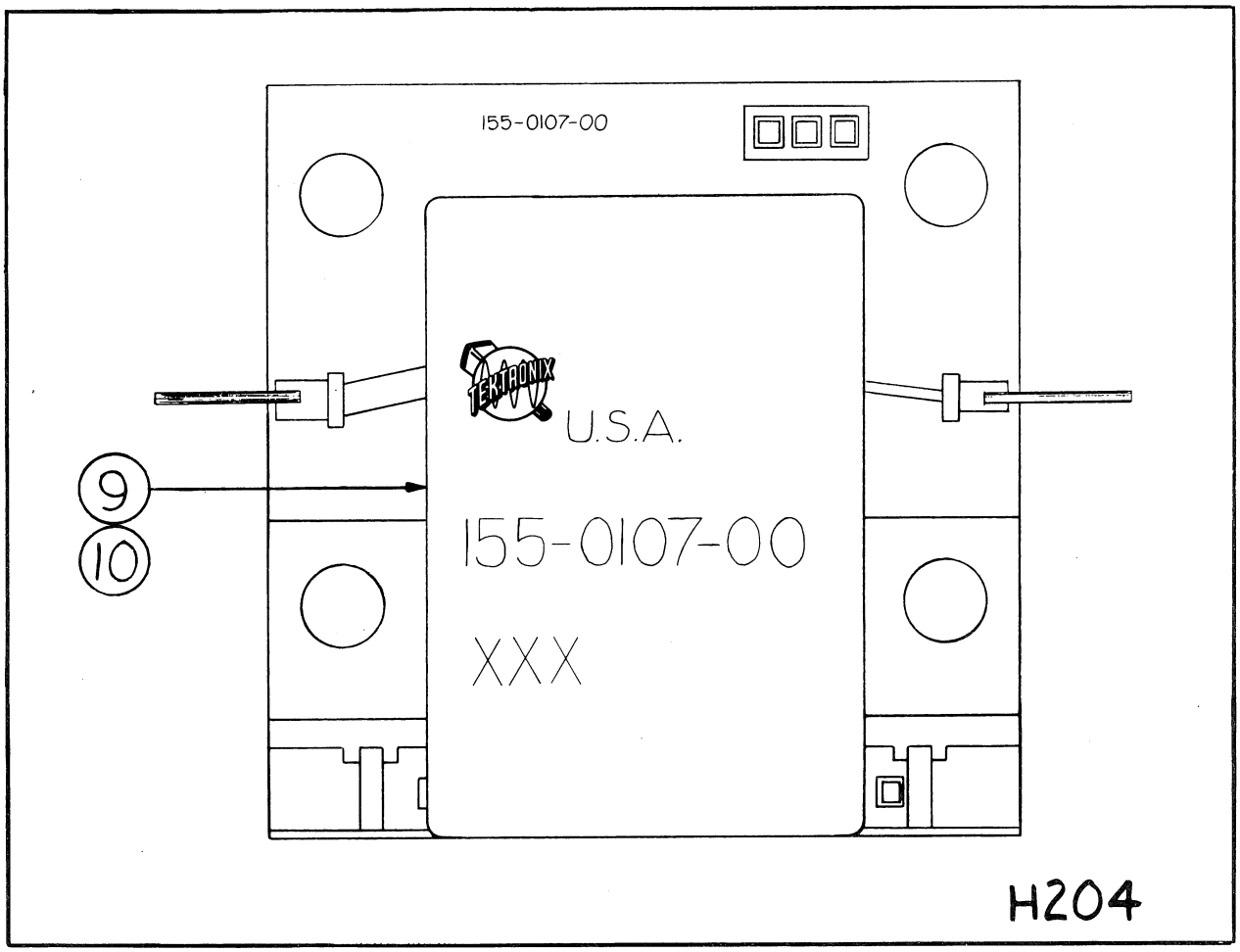
155-0107-00
TEKTRONIX
U.S.A.
9
10
155-0107-00
XXX
H204

TRIGGER CIRCUIT 155-0150-00 H473

DESCRIPTION

The H473 ia a Hybrid Integrated Trigger Circuit to be used in high frequency applications. The circuit consists of a SHF III monolithic mounted on a 1.22 cm square alumina substrate.

Refer to 203-0122-90 M122

PROCESS	Thin-Film
POWER SUPPLY.	± 5 Volts
PACKAGE	16 Lead QUIP
DESIGNER	Walt Ainsworth
INSTRUMENT USAGE	7B10 7B15 7B92A

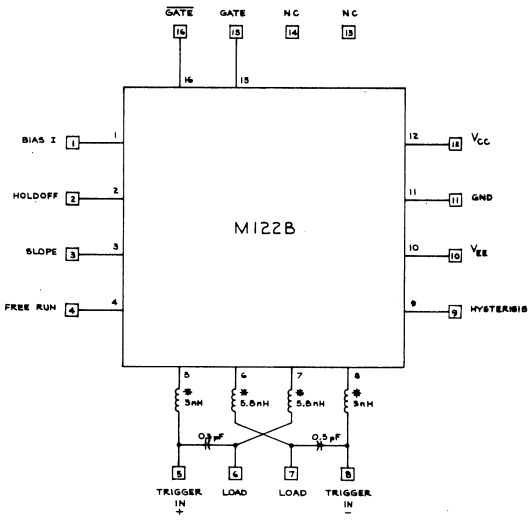

NOTE:
1. * INDUCTANCE OF BOND WIRES.

REVISED: 1 JUNE 77

ENGR		3-30-76	PROCESS	
DWN BY	S. POLENDEY	3-26-76	PACKAGE	
CHK BY			DIE SIZE	
TYPE	HYBRID	TRIGGER CIRCUIT		H473A
INTEGRATED CIRCUIT DIV./REP. TEKTRONIX, INC. BEAVERTON, OREGON, U.S.A.		PART NO. 155-0150-00		

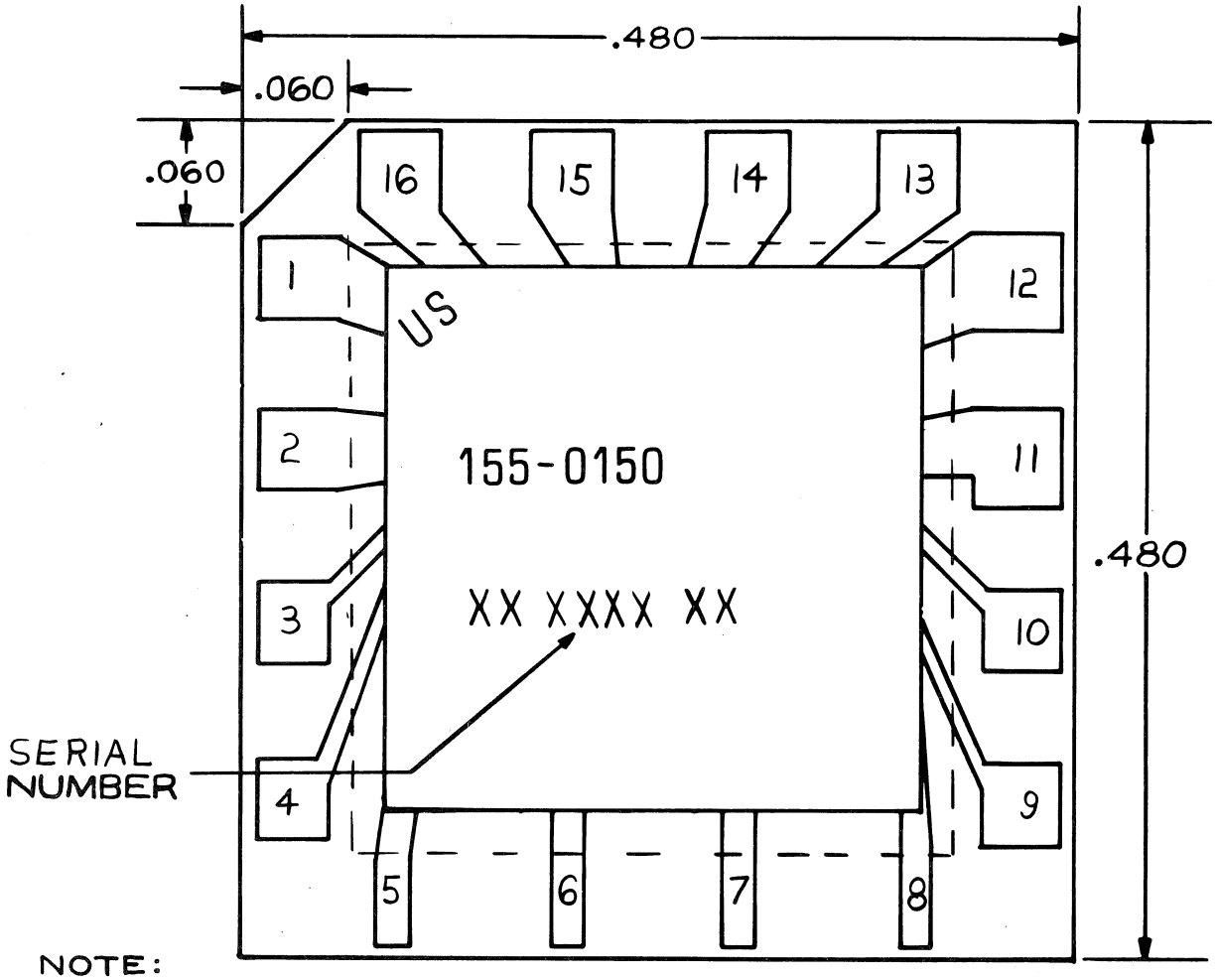

NOTE:
DIMENSIONS ARE REFERENCE ONLY.

HORIZONTAL CLAMP 155-0179-00 H475

DESCRIPTION

The H475 is a symmetrical soft clamp designed for use in a 50 Ω push-pull system. The point at which clamping occurs is externally controllable and a transistor is included on the hybrid to allow temperature compensation of the clamp point.

When used in the 50 Ω system, the 50 Ω environment is maintained except when clamping occurs. The hybrid has an insertion loss of approximately 3 dB.

Refer to 203-0196-90 M196.

PROCESS	Thin-Film
POWER SUPPLY.	
PACKAGE	1.22 cm Square Alumina Substrate
DESIGNER	Dave Morgan
INSTRUMENT USAGE	7104

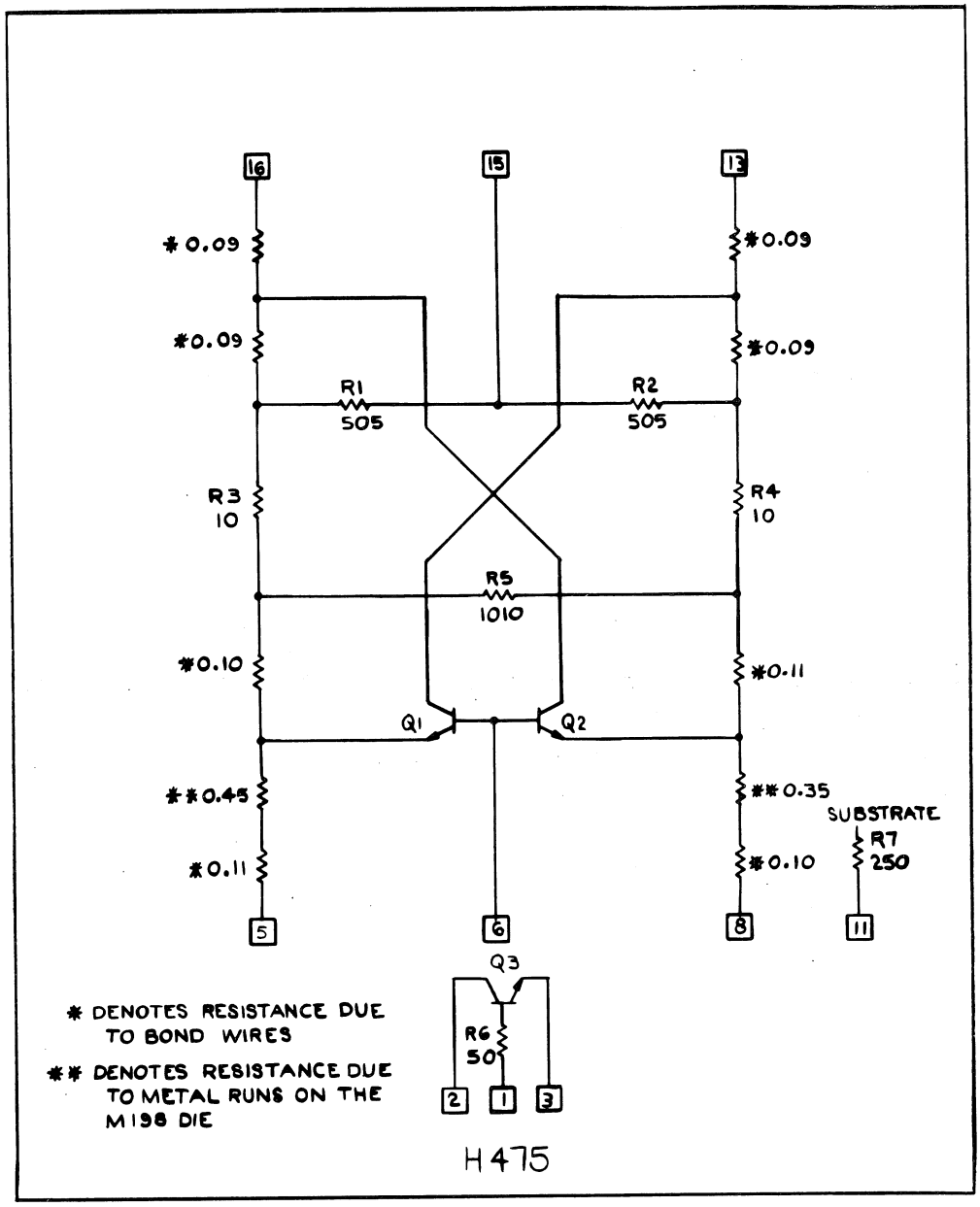
16
15
13
*0.09
*0.09
*0.09
*0.09
R1
505
R2
505
R3
10
R4
10
R5
1010
*0.10
*0.11
Q1
Q2
**0.45
**0.35
SUBSTRATE
R7
250
*0.11
*0.10
5
6
8
11
Q3
R6
50
2
1
3
* DENOTES RESISTANCE DUE TO BOND WIRES
** DENOTES RESISTANCE DUE TO METAL RUNS ON THE M198 DIE
H475

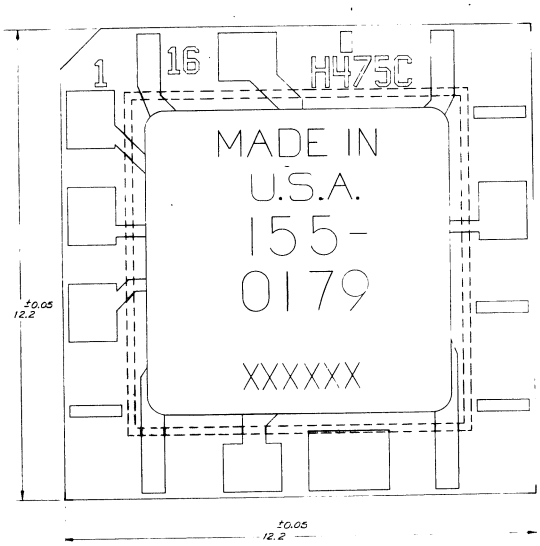
1
16
H475C
MADE IN
U.S.A.
155-
0179
XXXXXX
±0.05
12.2
±0.05
12.2

AMPLIFIER 155-0175-00 H476

DESCRIPTION

The H476 is a versatile high speed hybrid amplifier using a M178 integrated circuit. The circuit can provide a gain of 4.6 (13.3 dB) from a 50 Ω push-pull source without an output termination into a load of 50 Ω per side. Alternatively the circuit may be configured to provide a gain of 2.3 (7.3 dB) with an output termination of 50 Ω per side and into a load of 50 Ω per side. Risetime is less than 140 ps in either configuration.

By adjusting the ratio between two DC currents, the gain may be made to vary linearly from Ø to 2.3 or 4.6. There is no invert mode built in. An emitter pick-off provides a third output signal with a fixed gain of 0.5. The input common mode voltage appears on Pin #12.

Refer to 203-0178-90 M178

PROCESS	Thin-Film
POWER SUPPLY.	
PACKAGE	1.75 cm Hypcon System
DESIGNER	John Addis
INSTRUMENT USAGE	7104 7A29

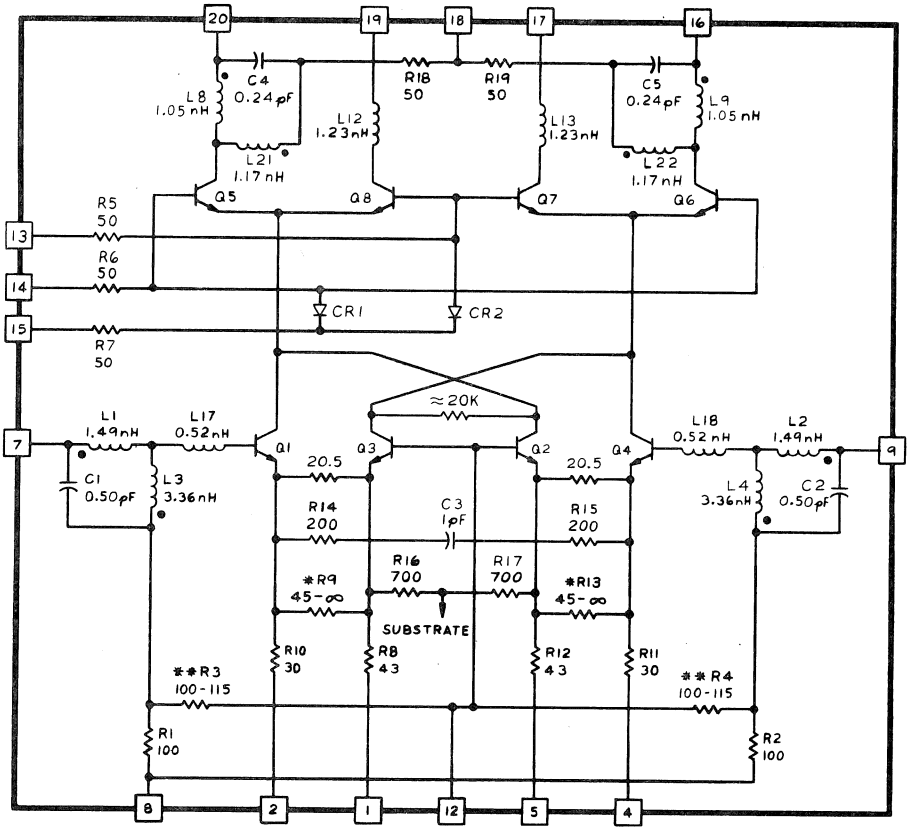

NOTES:

L1 IS COUPLED TO L4 M=0.308nH
L2 IS COUPLED TO L3 M=0.308nH
L8 IS COUPLED TO L21 M=0.165nH
L9 IS COUPLED TO L22 M=0.165nH
* TRIMMED FOR GAIN
** TRIMMED FOR $R_{IN} = 50\Omega$
Q1, Q2, Q3, AND Q4 ARE 2x(1.7μ x 50μ) DEVICES
Q5, Q6, Q7, AND Q8 ARE 2x(2.5μ x 50μ) DEVICES
CR1 AND CR2 ARE 2x(2.5μ x 12.5μ) DEVICES

H476	AMPLIFIER			INTEGRATED CIRCUIT ENG MFG TEKTRONIX INC BEAVERTON OREGON USA
PART NO.	155-0175-00		TYPE	HYBRID
ENG	John L Tedder	7-11-78	PROCESS	SHF III
DWN BY	Wynn Smith	8-18-78	PACKAGE	1.75 cm HYPCON
CHK BY	BOB GAULT	9-11-78	DIE SIZE	42 x 54 mils

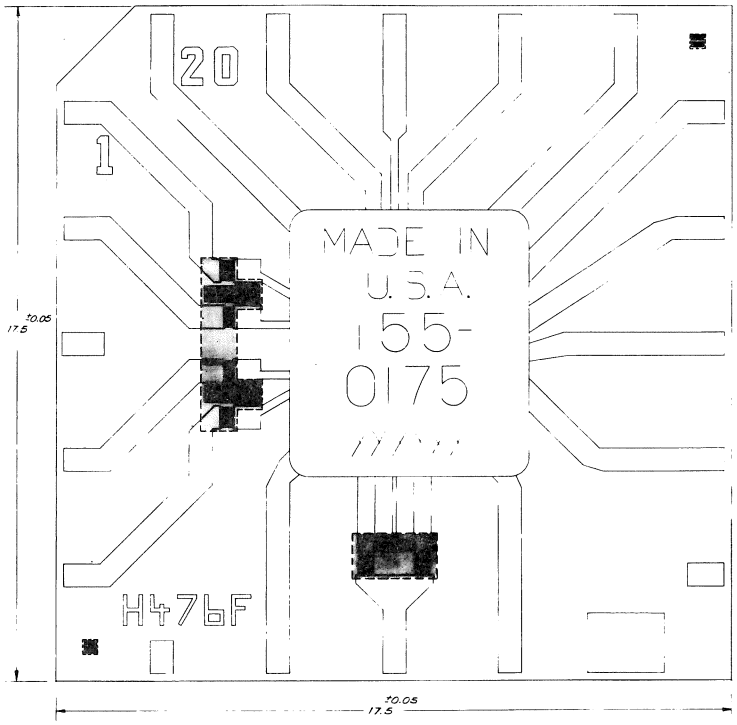

VERTICAL OUTPUT AMPLIFIER 155-0176-00 H477

DESCRIPTION

The H477 is a wideband (DC to 2 GHz) differential-in/differential-out amplifier consisting of an M196 integrated circuit. The hybrid develops ± 10 volts across 200 Ω and is used as a vertical CRT driver.

Refer to 203-0196-90 M196

PROCESS . . . . . Thin-Film

POWER SUPPLY. . . . . .

PACKAGE . . . . . 1.75 cm BeO Substrate

DESIGNER . . . . . W.A Gross

INSTRUMENT USAGE 7104

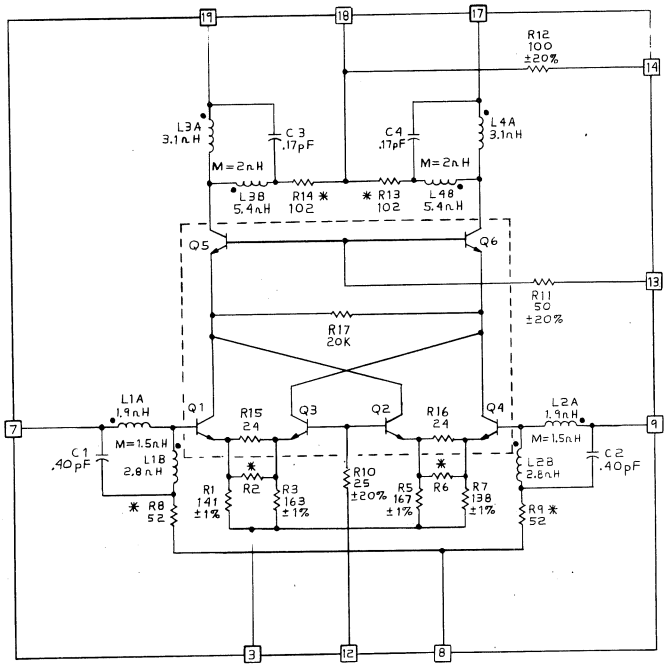

NOTES:
1. * R2, R6 ACTIVE TRIMMED FOR DC GAIN.
2. * R8, R9 ACTIVE TRIMMED FOR INPUT IMPEDANCE.
3. * R13, R14 ACTIVE TRIMMED FOR OUTPUT IMPEDANCE.

H477D	VERTICAL OUTPUT AMPLIFIER		INTEGRATED CIRCUIT ENG MFG TEKTRONIX, INC BEAVERTON, OREGON, USA	
PART NO.	155-0176-00		TYPE	HYBRID
ENG	W. A. Xyron	11/6/79	PROCESS	SH III
DWN BY	JIM NAMHIE	11/6/79	PACKAGE	1.75 cm HYPCON
CHK BY	BOB GAULT	11-7-79	DIE SIZE	17.5 X 17.5 mm

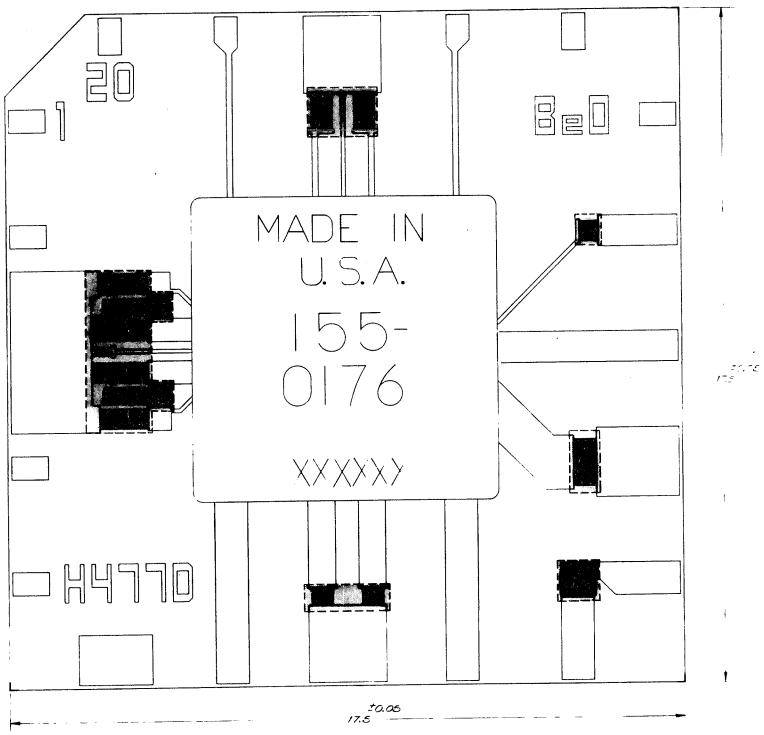

HORIZONTAL OUTPUT 155-0178-00 H488

DESCRIPTION

The H488 is a Linear Amplifier designed for use as a CRT Driver. It has an input impedance of 50 Ω per side and is designed to operate into a 365 Ω differential load. It has a current gain of 3.3 and is not back terminated. The device uses T-coils at the input and inductive peaking at the output. Its risetime is approximately 0.5 ns.

The H488 has a 20 KΩ resistor on each output. These provide low capacitance pick-offs of the output waveform for use in a feed-back circuit around the hybrid.

The f_T doubler section of circuitry is built using SHF III devices. The grounded base output devices are D156's.

Refer to 204-0707-90 D156

PROCESS . . . . . Thin-Film

POWER SUPPLY. . . . . .

PACKAGE . . . . . 1.75 cm^2 Hypcon System

DESIGNER . . . . . Dave Morgan

INSTRUMENT USAGE 7104

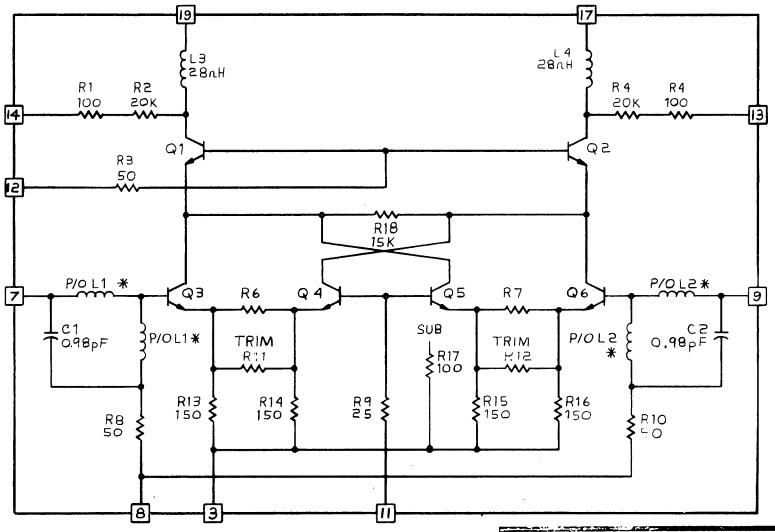

NOTE:
1. * L1 TOTALS 7nH.
2. * L2 TOTALS 7nH.

H488	HORIZONTAL OUTPUT		INTEGRATED CIRCUIT ENG MFG TEKTRONIX INC BEAVERTON OREGON USA	
PART NO.	155-0178-00		TYPE	HYBRID
ENG	Don R. Morgan	7.79	PROCESS	SH III
DWN BY	JIM NAMHIE	11/9/79	PACKAGE	13/42 cm^2 HYPCON
CHK BY	BOB GAULT	11-9-79	DIE SIZE	42 X 42 MILS

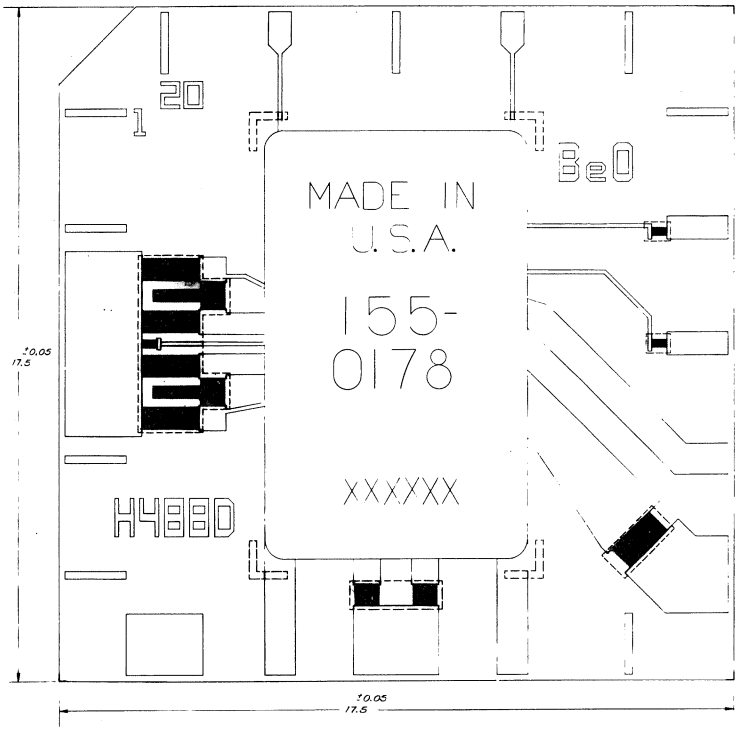

INPUT PROTECTION CIRCUIT 155-0180-00 H489

DESCRIPTION

The H489 is a hybrid input protection circuit designed to prevent the destruction of amplifiers having a 50 Ω input impedance by the accidental application of signals as large as ± 100 volts. Bandwidth is approximately 7 GHz and impedance match is maintained in both directions with approximately 1 dB loss of signal amplitude. Stored charge is approximately 200 picocoulombs.

An auxillary disconnection system such as a relay disconnect must be used to protect the H489 from long term application of overload signals. No heat sink is required.

PROCESS	Thin-Film
POWER SUPPLY.	± 13.5 Volts
PACKAGE	1.75 cm Hypcon System
DESIGNER	John Addis
INSTRUMENT USAGE	7A29

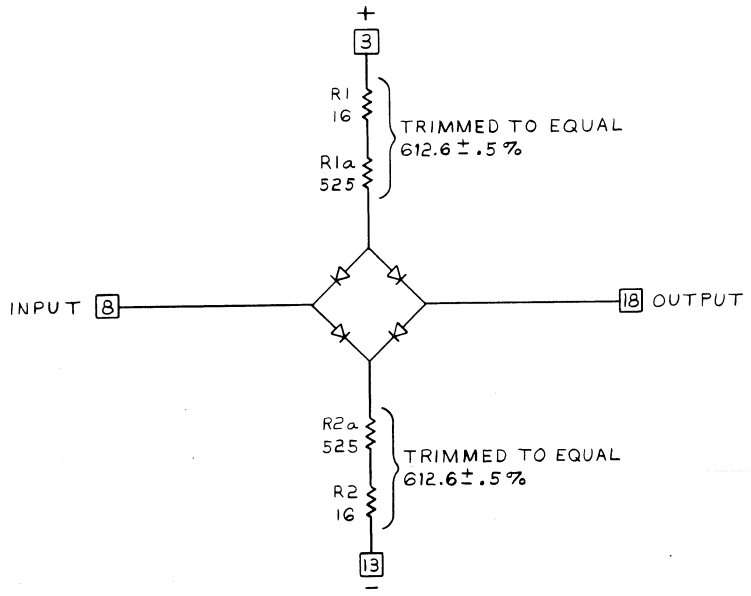
+
3
R1
16
R1a
525
TRIMMED TO EQUAL
612.6 ± .5 %
INPUT
8
18
OUTPUT
R2a
525
R2
16
TRIMMED TO EQUAL
612.6 ± .5 %
13
−

H489

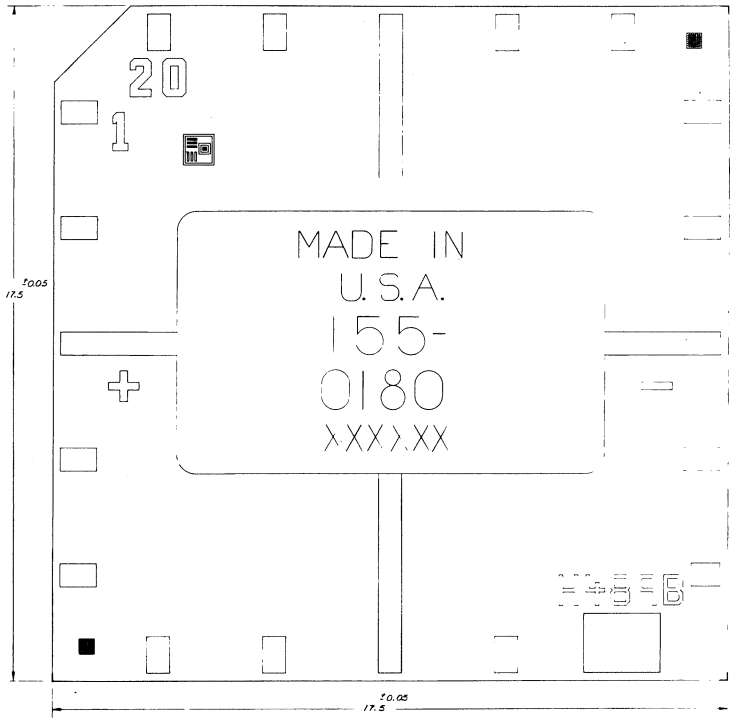
20
1
MADE IN
U.S.A.
155-
0180
XXX.XX
±0.05
17.5
±0.05
17.5

5-CHANNEL DATA ACQUISITION 155-0137-00 H493

DESCRIPTION

The H493 is a 5-Channel Data Acquisition hybrid featuring high speed, hgh input impedance, variable thresholds, and a differential ECL output.

PROCESS . . . . . Thick-Film

POWER SUPPLY. . . . . .

PACKAGE . . . . . .

DESIGNER . . . . . Oscar Olson

INSTRUMENT USAGE P6451

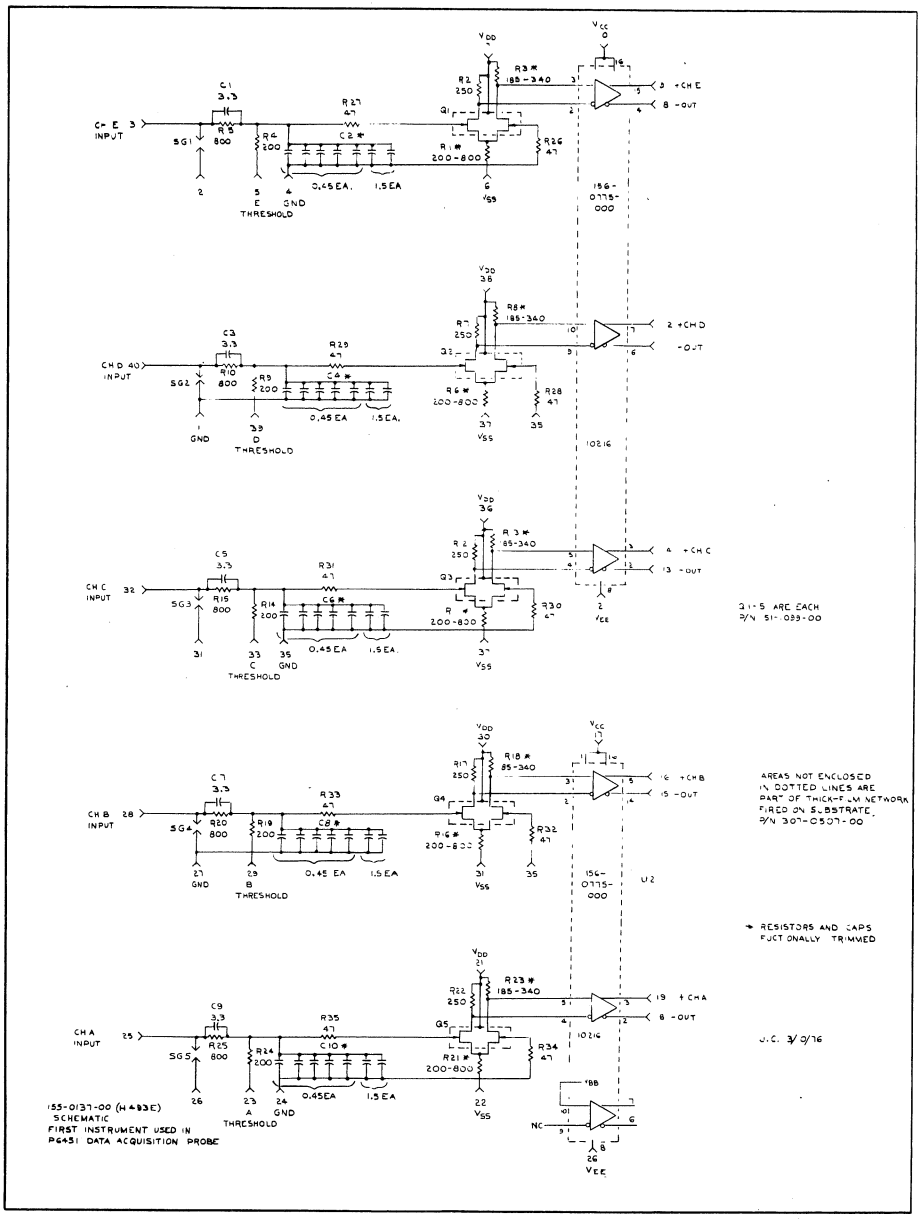

OUTLINE DRAWING NOT AVAILABLE AT THIS TIME

INPUT AMPLIFIER 155-0181-00 H500

DESCRIPTION

The H500 is a versatile high-speed hybrid amplifier using a M199 integrated circuit. The circuit has a single-ended 50 Ω input and push-pull outputs with a gain of up to 3.55 into a push-pull 50 Ω load. The gain may be varied from 3.55 to Ø and inverted to -3.55 by adjusting the ratio of two DC currents. At full gain, the rise-time is 180 ps or less, but appreciable loss of bandwidth occurs at lower gains.

Refer to 203-0199-90 M199

PROCESS . . . . . Thin-Film

POWER SUPPLY. . . . . .

PACKAGE . . . . . 1.75 cm^2 Hypcon System

DESIGNER . . . . . John Addis

INSTRUMENT USAGE 7A29

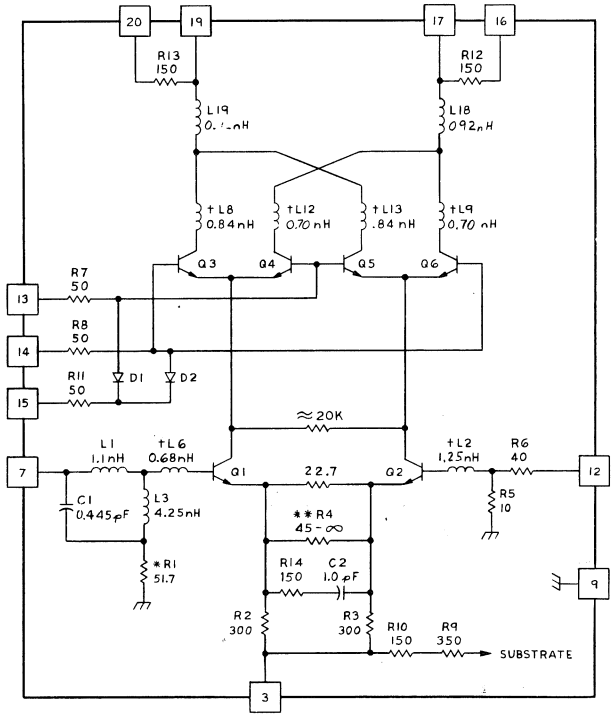

NOTES:

† PARASITIC INDUCTANCES

* TRIMMED FOR $R_{IN} \approx 50\Omega$

** TRIMMED FOR GAIN

Q1,Q2 EMITTER AREAS = 2 x (1.7μ x 50μ)
Q3,Q4,Q5,Q6 EMITTER AREAS = 2 x (1.7μ x 50μ)
D1,D2 EMITTER AREAS = 2 x (1.7μ x 12.5μ)

H500G	INPUT AMPLIFIER			INTEGRATED CIRCUIT ENG MFG TEKTRONIX, INC BEAVERTON, OREGON, U.S.A.
PART NO.	155-0181-00		TYPE	HYBRID
ENG	John Addis	8-27-80	PROCESS	SHF III
DWN BY	[illegible]	6-25-80	PACKAGE	1.75 cm HYPCON
CHK BY	BOB GAULT	8-27-80	DIE SIZE	54 x 42 mils

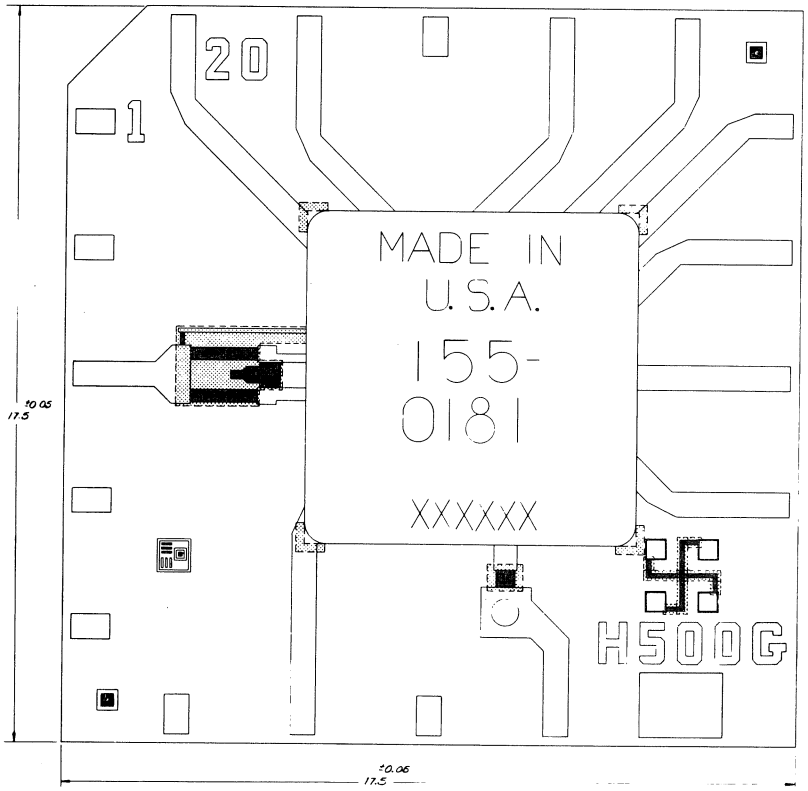

4-BIT PARALLEL A/D CONVERTER MSB 155-0165-00 H508-1

DESCRIPTION

The H508-1 is a 17 level (4-bit plus over-range) digitizer. The substrate contains 17 Thin-Film 10 Ω/Sq Nichrome resistors and one M155 integrated circuit. The approximately equal resistors (about 15 Ω each) are connected in series and are individually functionally trimmed to provide equal voltage increments between each output transition. Functional trimming permits an initial partial nulling out of errors due to offsets and base currents in the integrated circuit.

The H508-1 is designed for a full scale voltage of 3.072 or 192 mV per transition. VRP and V16 are shorted together. (The H508-2 is designed for a full scale voltage of 192 mV or 12 mV per transition. V16 is not connected to the hybrid resistor string and must be biased externally to VRP or higher. Voltage references are brought out for transitions 2, 7, and 12. These are used for the H508-2 ADC 820 application).

Refer to 203-0155-90 M155

PROCESS	Thin-Film
POWER SUPPLIES	V_{CC} +5V, V_{EE} -5.2V
PACKAGE	QUIP
DESIGNER	Bob Nordstrom
INSTRUMENT USAGE	ADC 820

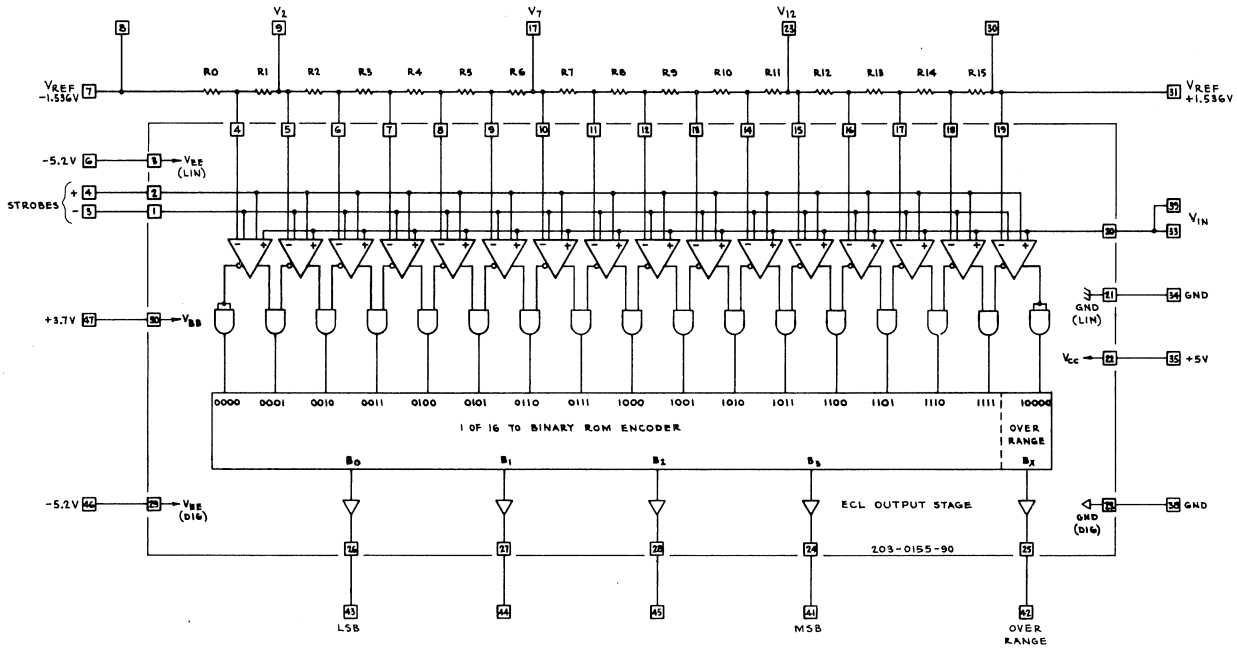

NOTES:
1. RESISTORS R0, R1, ···· R15 ARE APPROXIMATELY 15Ω EACH. THEY ARE FUNCTIONALLY TRIMMED SO THAT ADJACENT WORD TRANSITIONS WILL BE SPACED 192 mV WITH A RESISTOR STRING CURRENT OF APPROXIMATELY 12.8 mA CORRESPONDING TO A FULL SCALE VOLTAGE OF 3.072 V.

ENGR	R. Tolton	4-29-77	PROCESS	
DWN BY	Ron Hawkins	4-19-77	PACKAGE	48 PIN TEKFORM 35000
CHK BY	[illegible]	5-26-77	SUB SIZE	.7" X .7"
TYPE	HYBRID	4-BIT PARALLEL A/D CONVERTER, MSB		H508-1
INTEGRATED CIRCUIT DIV./DIV. TEKTRONIX, INC. BEAVERTON, OREGON, U.S.A.			PART NO.	155-0165-00

OUTLINE DRAWING NOT AVAILABLE AT THIS TIME

DESCRIPTION

The H508-1 is a 17 level (4-bit plus over-range) digitizer. The substrate contains 17 Thin-Film 10 Ω/Sq Nichrome resistors and one M155 integrated circuit. The approximately equal resistors (about 15 Ω each) are connected in series and are individually functionally trimmed to provide equal voltage increments between each output transition. Functional trimming permits an initial partial nulling out of errors due to offsets and base currents in the integrated circuit.

The H508-2 is designed for a full scale voltage of 192 mV or 12 mv per transition. V16 is not connected to the hybrid resistor string and must be biased externally to VRP or highter. VOltage references are brought out of transitions 2, 7, and 12.
designed for a full scale voltage of 192 mV or 12 mV per transition.
ed externally to VRP or higher. Voltage references are brought out
application).

Refer to 203-0155-90 M155

PROCESS	Thin-Film
POWER SUPPLIES	V_{CC} +5V, V_{EE} -5.2V
PACKAGE	QUIP
DESIGNER	Bob Nordstrom
INSTRUMENT USAGE	ADC 820

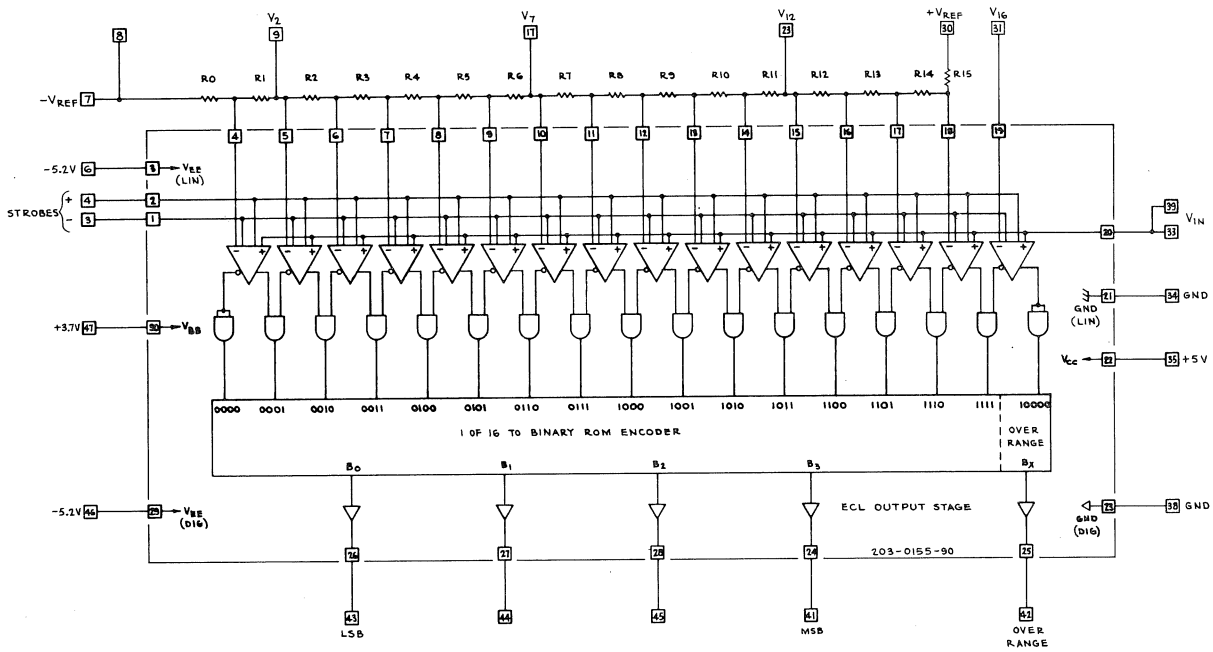

NOTES:

1. RESISTORS R0, R1, ···· R15 ARE APPROXIMATELY 15 Ω EACH. THEY ARE FUNCTIONALLY TRIMMED SO THAT ADJACENT WORD TRANSITIONS WILL BE SPACED 12 mV WITH A RESISTOR STRING CURRENT OF APPROXIMENTLY 0.8 mA CORRESPONDING TO A FULL SCALE VOLTAGE OF 192 mV.
2. POS. V_{REF} - NEG. V_{REF} = 192 mV.

ENGR	[illegible]	4-25-77	PROCESS	
DWN BY	Ron Hankins	4-19-77	PACKAGE	48 PIN TEKFORM 35000
CHK BY	[illegible]		SUB SIZE	.7" X .7"
TYPE	HYBRID	4-BIT PARALLEL A/D CONVERTER, LSB		H508-2
INTEGRATED CIRCUIT DEV/MFG TEKTRONIX, INC. BEAVERTON, OREGON, U.S.A.		PART NO. 155-0165-01		

OUTLINE DRAWING NOT AVAILABLE AT THIS TIME

DIODE PULSE SHAPER 155-0182-00 H575

DESCRIPTION

The H575 is a Schottky Barrier diode pulse shaping circuit. Differential outputs with risetime of less than 150 ps are produced when the appropriate drive signal is applied. Amplitude is variable to a maximum of 500 mV side-to-side.

PROCESS	Thin-Film
POWER SUPPIES	± 15 Volts
PACKAGE	1.75 cm Hypcon System
DESIGNER	Art Metz
INSTRUMENT USAGE	067-0587-02

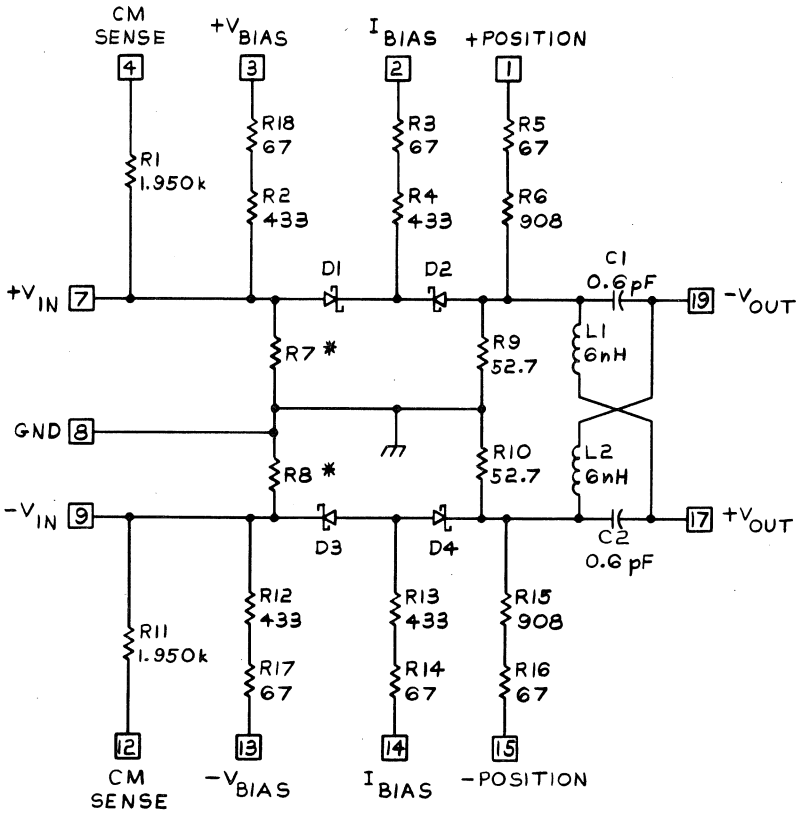

* NOTE: R7 & R8 BURNED OFF WITH LASER

H575

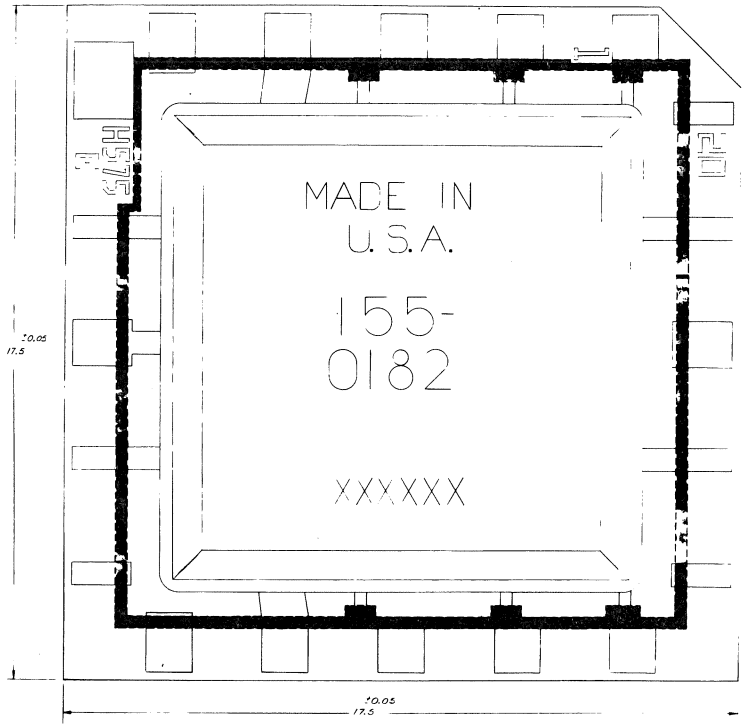

VERTICAL PREAMPLIFIER GAIN SWITCH 155-0161-00 H616

DESCRIPTION

The H616 is a hybrid circuit using one M130 integrated circuit. External circuit connections are made through Berg pins along one edge. The camswitch contact pads are incorporated to provide for gain switching function. The circuit incorporated gain switching for 5 mV/div and 20 mV/div deflection factors, 2.5:1 variable gain, inversion, positioning, trigger pick-off, and channel switch. Two circuits re used to provide dual trace operation in the SC504. An overall system bandwidth of at least 80 MHz is achieved.

Refer to 203-0130-90 M130

PROCESS . . . . . Thick-Film

POWER SUPPLY. . . . . ± 5 Volts

PACKAGE . . . . . SIP

DESIGNER . . . . . .

INSTRUMENT USAGE SC504

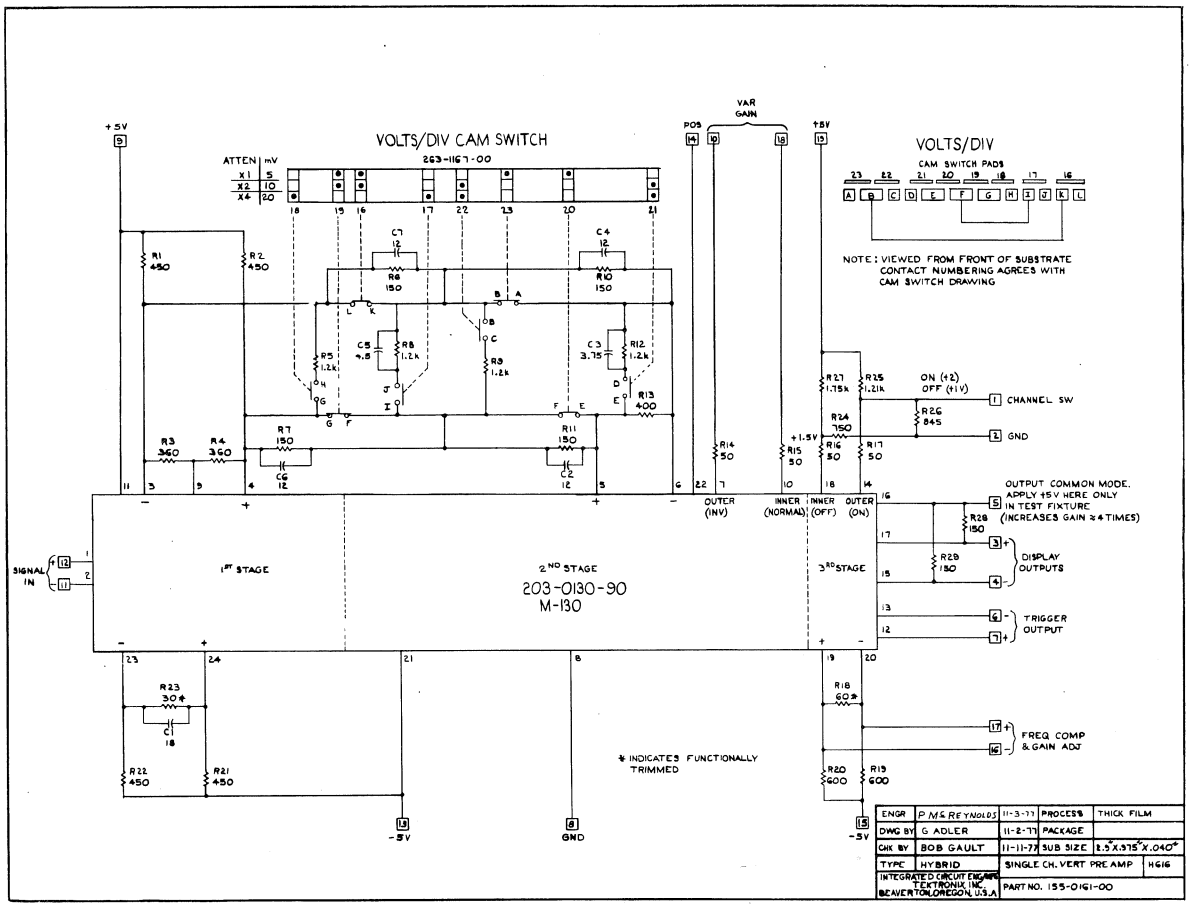

OUTLINE DRAWING NOT AVAILABLE AT THIS TIME

DIFFERENTIAL DETECTOR 155-0183-00 H672

DESCRIPTION

The H672 is a Schottky Barrier diode detector for use in a differential leveling loop. Detected output is proportional to the signal voltage from side-to-side rather than from side-to-ground. The usable frequency is from 3 MHz to 1.5 GHz. High frequency response can be controlled by a DC input.

PROCESS	Thin-Film
POWER SUPPLIES	± 15 Volts, +5 Volts
PACKAGE	1.75 cm Hypcon System
DESIGNER	Art Metz
INSTRUMENT USAGE	067-0587-02

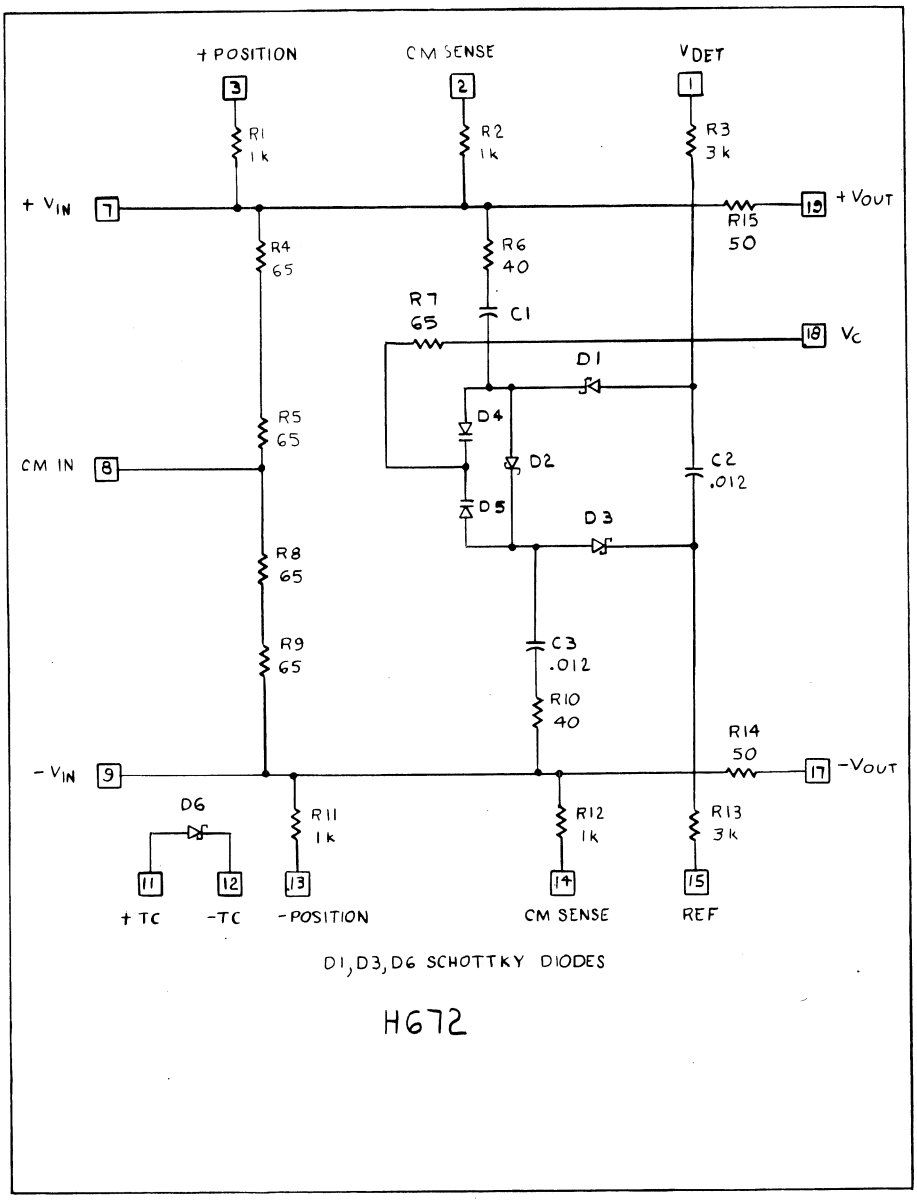
+ POSITION
CM SENSE
VDET
3
2
1
R1 1k
R2 1k
R3 3k
+ VIN
7
+ VOUT
19
R15 50
R4 65
R6 40
R7 65
C1
18
VC
D1
D4
D2
D5
D3
R5 65
CM IN
8
C2 .012
R8 65
R9 65
C3 .012
R10 40
R14 50
- VIN
9
17
-VOUT
D6
R11 1k
R12 1k
R13 3k
11
12
13
14
15
+ TC
-TC
-POSITION
CM SENSE
REF
D1, D3, D6 SCHOTTKY DIODES
H672

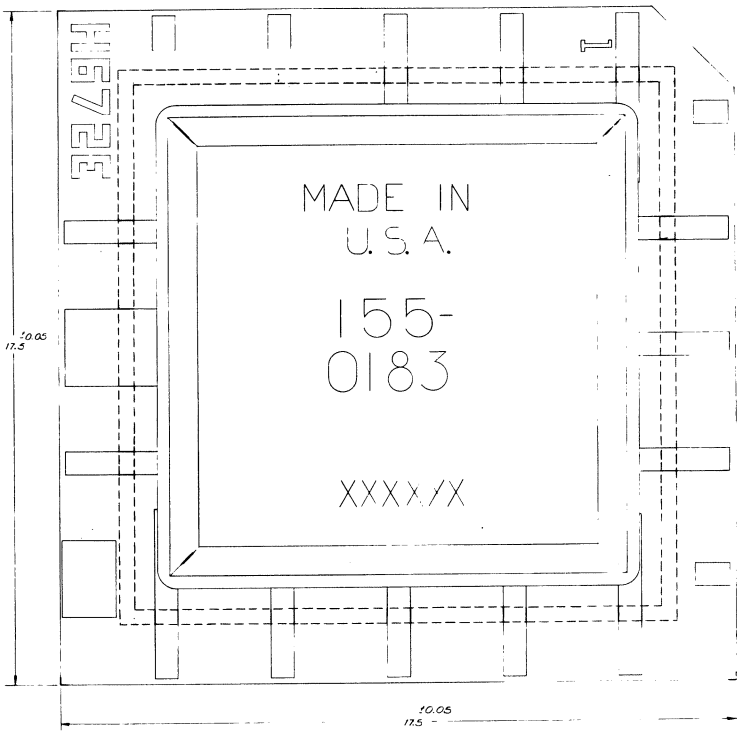
H672
MADE IN
U.S.A.
155-
0183
XXXX/X
±0.05
17.5
±0.05
17.5

DESCRIPTION

The H710 is designed for use with the M177 in a parallel-serial system. It is also possible to construct a 10-Bit DAC using two H710's. The hybrid contains Nichrome resistors with a sheet resistance of 50 Ω/sq. R_R sets the reference current and is trimmed to 480 Ω/Sq. R_A is a pull-up load resistor trimmed to be 0.25 R_R. Binarily-scaled emitter resistors are functionally trimmed to set-up precision current sources. These are trimmed while measuring the output current at Pin #5. Two unswitched current sources approximately equal to ILSB are provided. One is connected to the output, the other is available as an open collector. The emitters of these two current sources are brought out so that they can be adjusted or disabled.

The part is designed to operate with a reference of +3.072 volts or ± 1.536 volts. Full scale output current is then 25.6 mA. A -5.2 volt digital supply is needed to set-up the reference current. Digital inputs are ECL compatible and sink 1 mA each.

The H710 is tested to have linearity between ± 0.05% (± 1/2 LSB at 10 bits). More specifically, the four LSB currents ratio binarily to the MSB current within ± 0.05% of full scale where full scale is defined to be twice the MSB current. Differential non-linearity is also tested so that each 1-bit transition causes an output change of 1/32 of full scale ± 0.05% full scale. A final check of overall linearity is made by testing that the sum of the absolute values of each bit current error is less than 0.1% of full scale. This guarantees an overall non-linearity of less than ± 0.05%.

The trimming and testing of the hybrid is done with the output at a constant potential in order to minimize non-linearity due to variable DAC output conductance. Theory and some testing indicate than an output compliance of 3 volts will affect linearity in a "smooth" fashion by less than 0.05% of full scale.

Settling time to ± 1/2 LSB with 10 pF load capacitance is typically 15 nS for 8-bits.

Refer to 203-0177-90 M177

PROCESS	Thin-Film
POWER SUPPLY.	
PACKAGE	TO-8
DESIGNER	Bob Nordstrom
INSTRUMENT USAGE	ADC 820

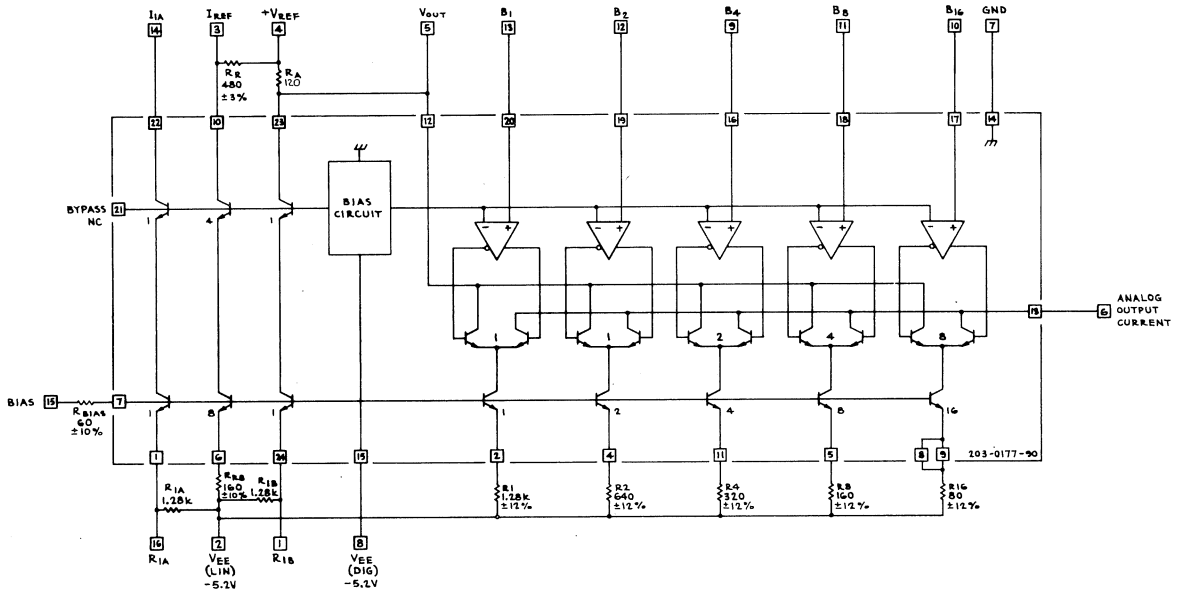

NOTES:

1. R_E IS TRIMMED SO THAT V(PIN 10) = −750mV ± 50mV.
2. R_A IS TRIMMED TO RATIO TO R_R.
3. R_{1A}, R_{1B}, RB AND R16 ARE TRIMMED SO THAT THEIR RESPECTIVE OUTPUT CURRENTS SCALE APPROXIMATELY TO THE REFERENCE CURRENT.
4. R1, R2 AND R4 ARE TRIMMED SO THAT THEIR RESPECTIVE OUTPUT CURRENTS SCALE ACCURATELY TO THE CURRENT THROUGH R8.
5. FOR RATIO AND SCALING TOLERANCE SEE LASER TRIM SPECIFICATION.

ENGR		4-29-77	PROCESS	
DWN BY	Ron Hawkins	4-21-77	PACKAGE	16 PIN TO-8 LG.
CHK BY		5-26-77	SUB SIZE	.3" X .3"
TYPE	HYBRID	5 BIT D/A CONVERTER		H710
INTEGRATED CIRCUIT ENG/MFG. TEKTRONIX, INC. BEAVERTON, OREGON, U.S.A.		PART NO. 155-0167-01		

OUTLINE DRAWING NOT AVAILABLE AT THIS TIME

8-BIT D/A CONVERTER 155-0169-00 H719

DESCRIPTION

This D/A converter hybrid consists of an eight section 75 Ω ladder network with eight input transistors and eight emitter resistors of 250 Ω each.

The input terminals are intended to be connected to external diodes and with these diodes, the circuit is compatible with ECL circuitry.

PROCESS	Thin-Film
POWER SUPPLY.	-5.8 Volts
PACKAGE	24 Pin DIP
DESIGNER	Oscar Olson
INSTRUMENT USAGE	DAC 850T

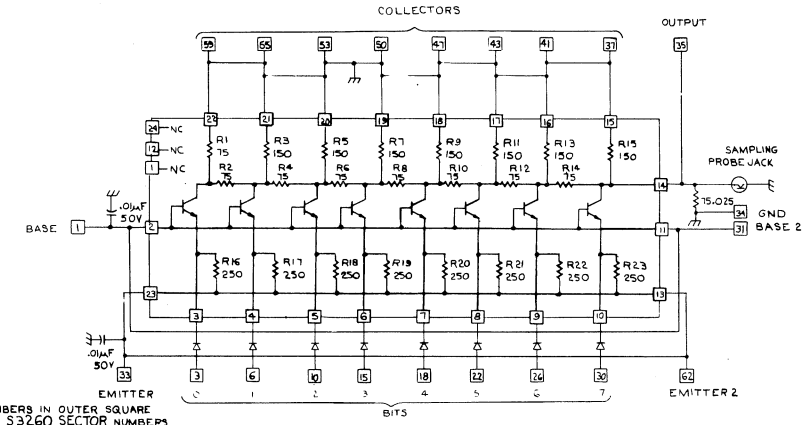

NUMBERS IN OUTER SQUARE ARE S3260 SECTOR NUMBERS

DIODES ARE 152-0153-00

ALSO USES REGISTERS ON SECTORS: 2,5,9,14,17,21,25,29

H719A AND SOCKET CARD

OUTLINE DRAWING NOT AVAILABLE AT THIS TIME