INSTRUCTION MANUAL SUPPLEMENT

Serial Number _____

This insert is provided as a supplement to the Instruction Manual furnished with this instrument. The information given in this insert supersedes that given in the manual.

144/R144 NTSC TEST SIGNAL GENERATOR

Tektronix, Inc. ● P. O. Box 500 ● Beaverton, Oregon 97005 ● Phone 644-0161 ● Cables: Tektronix

070-1084-00 970

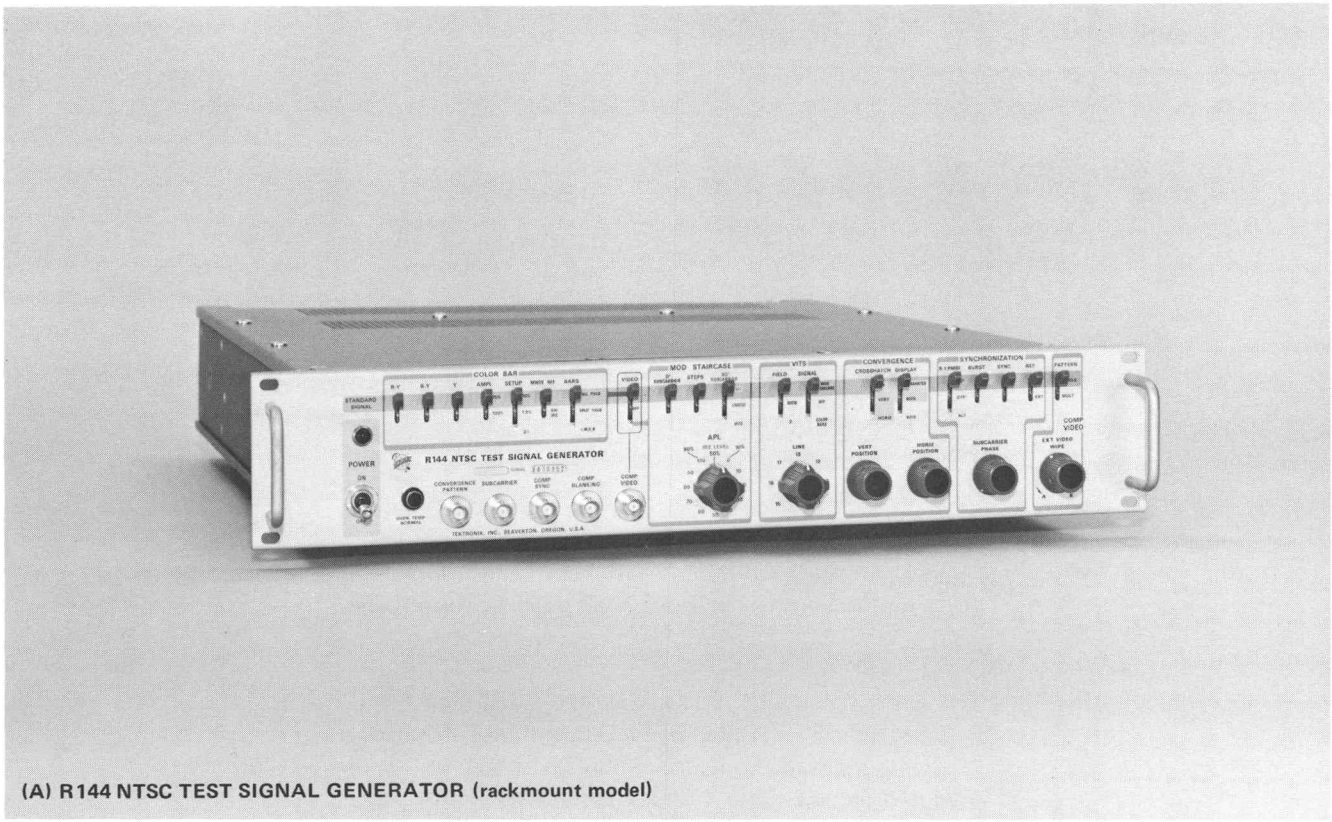

(A) R144 NTSC TEST SIGNAL GENERATOR (rackmount model)

(B) 144 NTSC TEST SIGNAL GENERATOR (cabinet model for portable use)

144/R144 NTSC TEST SIGNAL GENERATOR

General

The 144 NTSC Test Signal Generator is similar to the Type 140 NTSC Test Signal Generator, but with added capabilities for generating multiple-pattern displays, particularly adapted for utility-channel service in community antenna systems (CATV).

A front-panel COMP VIDEO PATTERN switch selects the operating mode. Set to SINGLE PATTERN, the 144 provides the single pattern function of the Type 140. Set to MULT PATTERN, the 144 provides a multiple pattern composite video output consisting of convergence, color bars, gray scale, and an insert area for displaying two external video inputs. The uses for this pattern are almost limitless.

Multipattern

The multiple pattern display is, basically, the convergence pattern display which can be over-ridden by the internally generated color bar or modulated staircase patterns. This composite display can, in turn, be over-ridden by the external video. The pattern sequence is user-selected, internally, with insulated jumpers. The internally-generated video segment and external video segments are inserted into the composite video output in place of the crosshatch video, line for line.

Pattern segment locations can be from picture lines 22 through 261, and height can be selected in one line (per field) increments from 0 to 255 lines. (Segments are locked out during vertical blanking.)

The generator is preset to provide luminance/color bars segment (lines 74 through 106) and external video segment (lines 179 through 211) at equal distances above and below the center of the picture; see Fig. 1 and Fig. 2.

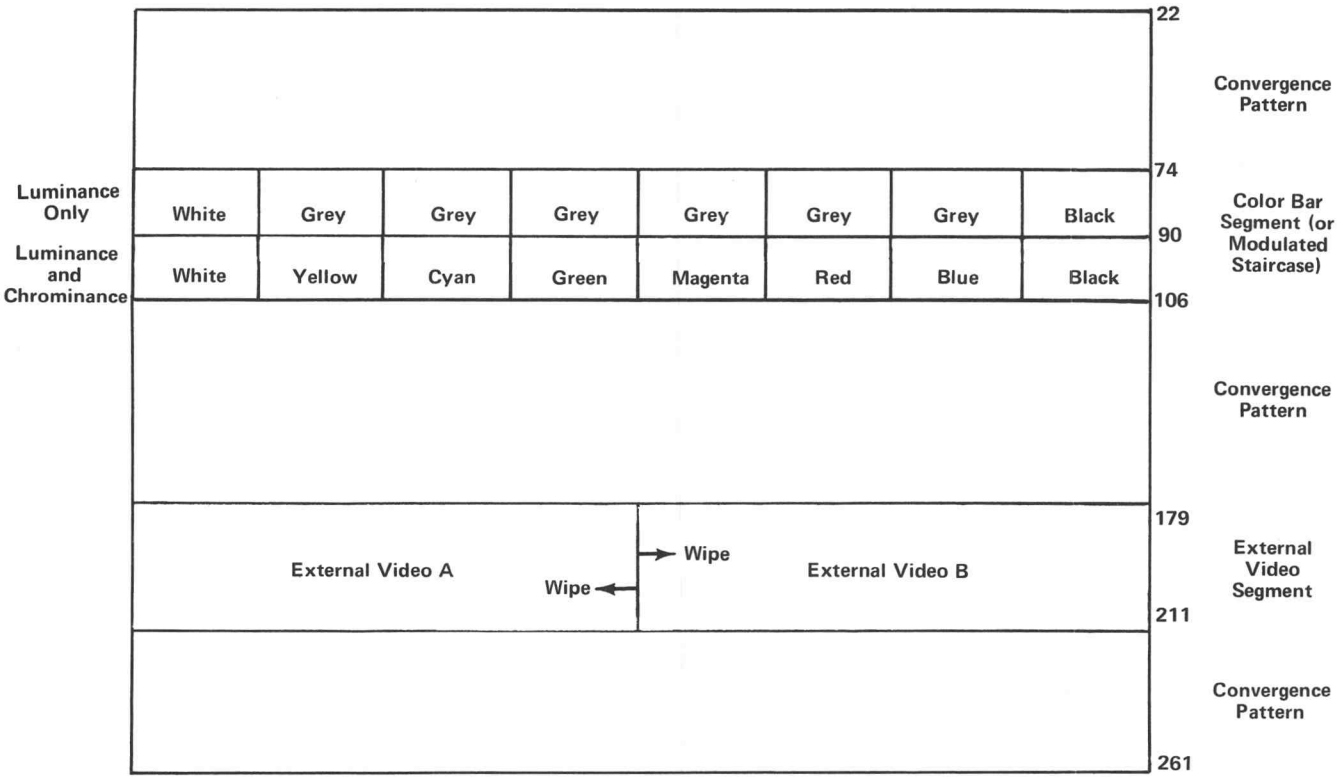

Fig. 1. Preset Multiple Pattern Display.

COLUMN	FUNCTION	2^0 1	2^1 2	2^2 4	2^3 8	2^4 16	2^5 32	2^6 64	2^7 128	TOTAL COUNT	PICTURE LINE
E	Color Bar Start (Luminance Only)	0	0	+	0	0	0	+	0	68 + 6 =	74
D	Chrominance Add	0	0	+	0	+	0	+	0	84 + 6 =	90
C	Color Bar Stop	0	0	+	0	0	+	+	0	100 + 6 =	106
B	External Video Start	+	0	+	+	0	+	0	+	173 + 6 =	179
A	External Video Stop	+	0	+	+	0	0	+	+	205 + 6 =	211

Fig. 2. Preset Multiple Pattern Function Selector.

External Video

The external video segment may be from either or both of two external sources. An EXT WIPE control provides switching between the two sources as a function of horizontal line time.

The external video may be either composite or non-composite video. Setup is normally preserved, but can be inserted by the front panel setup selection. The 144 does not delete setup from the external video.

Synchronization

The external video and the 144 must be synchronized. The 144 must either be sync'd from the external video source with composite sync and subcarrier (if color is desired), or it must act as the master sync source. The 144 cannot be GEN-LOCKED (e.g., synchronized from comp video).

144 SPECIFICATION

The specifications as listed in the Type 140 manual apply to the 144 in addition to the following given in Table 1.

TABLE 1

Characteristic	Performance Requirement
EXTERNAL VIDEO INPUTS	
A and B	
Impedance	75 ohm loop-through.
Return Loss	40 dB or greater, DC to 3.58 MHz.
Amplitude	
Composite Video	1.0 volt peak to peak.
Non-Composite Video	0.714 volt peak to peak.
EXTERNAL VIDEO AMPLIFIER	
Frequency Response	Flat to 3.58 MHz within 3%.
Pulse Response	Two IRE or less overshoot, one IRE or less tilt with T-step input.
Differential Gain	3% or less, 10% to 90% APL.
Differential Phase	2° or less, 10% to 90% APL.
Crosstalk A and B	At least 40 dB, DC to 3.58 MHz.
Crosstalk From Internal Sources	At least 40 dB, DC to 3.58 MHz.
MULTIPLE PATTERN	
CONVERGENCE PATTERN	
Pulse Amplitude	75 IRE units.

OPERATING INSTRUCTIONS

General

The normal operating instructions given in the Type 140 Instruction Manual are applicable to the 144 when operated

with the COMP VIDEO PATTERN switch in the SINGLE position. Setting the PATTERN switch to MULT position makes it possible to allocate vertical segments of the composite video output display to be occupied by any of five different test signals.

Line Selection

Five columns of jumper pins are provided for setting up the lines of the picture to be occupied by the various available signals. Each column, identified on the circuit board as A, B, C, D, and E, has eight jumpers, each of which can be put into one of two positions: onto the center and left pins ("0") or onto the center and right pins ("+").

Each jumper row represents a binary count in ascending powers of 2 as noted on the board to the left of Column A (1, 2, 4, 8, 16, 32, 64, and 128). With all jumpers in the right-hand position ("+"), the total count becomes 1 + 2 + 4 + 8 + 16 + 32 + 64 + 128 equals 255. The count is similarly additive for any combination of "0" and "+" jumper positions. The jumpers are color-coded 1 through 8 (EIA, RMA, or RETMA color-codes) to assist in quick identification. The count is reset for each field so the selection range covers all active picture lines.

NOTE

Except for certain special effects, to be discussed later, a jumper should always be securely installed in either the "0" or the "+" position.

The functions selected by the five columns of jumper pins are as follows:

Column E: Selects the first line of the Luminance/Color Bar display segment.

Column D: Selects the first line in the Luminance/Color Bar segment that will have chrominance added to the luminance signal.

Column C: Selects the ending line of a Luminance/Color Bar segment.

Column B: Selects the first line of the External Camera Video display segment.

Column A: Selects the last line of the External Camera Video display signal.

There is no Luminance Only portion of the Luminance/Color Bar display when the front panel VIDEO switch is in the down position. In this mode, the segment is continuous as set by the MOD STAIRCASE controls.

The NTSC line number in each field on which a selected function will become effective is the binary count selected by the jumpers plus 6. To obtain the start of the external camera video segment at line 131, a binary count of 131 minus 6, or 125, is needed (64 + 32 + 16 + 8 + 4 + 1). The gray (128) and red (2) jumpers in Column B would be set to "0" and all the others in that column to "+".

The minimum selectable binary count for a function to occur is 16 (equal to line 22). If a binary count of 15 or less is set up, the function will be locked out by action of the Vertical Blanking signal, which acts on the control logic to keep video information other than VITS out of the Vertical Blanking Interval. For binary counts of 16 through 255 (picture lines 22 through 261), any desired combination can be set up.

If a count of 0 through 15 is set up for a stop function (Column C or Column A), it is the stop function which will not occur and the display, assuming a proper start function has been initiated, will continue until it is automatically reset by the Vertical Blanking pulse at the end of the field.

The technique of setting a stop function to 0 can be used to obtain the continuation of a luminance/color bar or an external camera video display segment through lines 261 and 262. Normally, the last available stop selection (binary count 255) terminates the segment after line 260, leaving convergence pattern on lines 261 and 262.

Segment Priorities

The selectable displays each carry a logic priority, to cover instances where range selections overlap. This built-in feature allows setting up some displays that would not otherwise be possible.

First priority is given to External Video. Its display will always appear on the selected lines, regardless of what else may also be programmed to occur on those same lines.

Second priority is given to the Internal Luminance/Color Bar display. Its programming takes precedence over the Convergence Pattern, but not over External Video.

Third priority is given to the Convergence Pattern (cross-hatch lines and/or dots). This display only occurs on lines not otherwise programmed.

Using the priority system, an External Video display can be flanked above and below by color bars, with the Convergence Pattern at the top and bottom of the screen.

As a side-effect of the logic priority system, the Convergence Pattern display will be blanked by the selected picture segment programmed for the Chroma-added portion of the Luminance/Color Bar display even when there has been no "Start Luminance/Color Bar Display" command programmed (e.g., with Column E set to "0" or to some point after the Column D setting). Where "ADD Chroma" is set prior to "Start Luminance/Color Bar", there will be a blanked portion (no Convergence Pattern) from the selected "Add Chroma" line to the selected "Start Luminance" line, and there will be no luminance-only segment in the Color Bars display. The blanked portion may be occupied by the External Video Segment if so programmed, providing a blank "frame" for this segment.

Special Effects

Repeated Segments. The jumpers represent binary fractions of the field during which the function represented by a given column is inhibited. The "128" jumper inhibits during the first half of the field when in "+" and in the second half of the field when in the "0" position. If it is in neither position, the function can occur twice per field. If both the "128" and "64" jumpers are removed, the function can occur four times, and so forth. Some care in programming is required to avoid confusion in multiple-display modes, however.

The basic rules are:

(a) A start and stop both should be programmed to occur within the first selected fraction of the field. Example: Four repetitions of the Luminance/Color Bar signal are desired. The start, add-Chroma and stop jumpers should be set up to provide the complete display between count 16 (line 22) and count 63 (line 69).

(b) To secure equal-duration recurrences, both the start and stop functions must be programmed to repeat. In the example above (4 occurrences), the "128" and "64" jumpers must be disconnected in Columns E, D, and C in order to obtain the same display each time.

(c) The minimum binary count for a function to occur in the first fraction is 16 (line 22). Assuming that four occurrences are programmed ("64" and "128" jumpers disconnected), the second cannot start earlier than 16 lines past the "64" count, or line 86. If the start is set to 15 or less, it will not occur in the first quarter of the screen, but will occur only at lines 70 + x, 134 + x and 198 + x, where x is the binary count set up.

(d) Note that for External Video, only the signal source is repeated, not the actual display. What appears on screen will be whatever is in the camera's field of view at the selected locations, permitting apparently independent pictures to be "windowed" from the same camera.

Assume that the desired display consists of a section of convergence pattern; an External Video input from a camera showing current time and temperature, with wipe to a second camera showing, for instance, a traveler with news headlines or weather forcast; some more convergence pattern, then luminance & color bars, then more convergence pattern, then back to the External Video, this time showing channel identification with wipe to program listings; and finally, more convergence pattern.

Procedure: Normally, for single-occurrence displays, it is convenient to plan duration and separation of the displays on the basis of crosshatch squares (duration of one crosshatch pattern segment is 17 1/2 lines, established by a count of 17, 18, 17 in one field and 18, 17, 18 in the opposite field). For multiple displays, however, the repetitions of a given source are separated by a binary fraction of the field (1/2, 1/4, 1/8 etc.) and the transitions cannot all be made to coincide with the crosshatch lines.

The 240 active picture lines contain 13 5/7 crosshatch squares of which perhaps 12 (210 lines from line 37 through line 246) will be visible in a typically overscanned receiver.

For a full row of crosshatch across the top of the screen (say, lines 37 to 55), External Video would be programmed to start at line 56, which is binary count 50 (32 + 16 + 2). If the External Video Start "128" jumper is removed, External Video will also start again at line 56 + 128 = line 184.

If the duration of External Video were set to 3 full crosshatch squares, the second segment would run to line 236, about 9 lines (1/2 square) from the bottom of the screen of the hypothetical receiver. To get a full row of crosshatch squares across the bottom, the External Video duration must be set back to about 2 1/2 squares, or about 44 lines. External Video stop (Column A) would then be set to line 100 (Binary 94 = 64 + 16 + 8 + 4 + 2). The External Video Stop "128" jumper should be removed (set sideways) to obtain a repetition of the "stop" command.

The area from line 101 to line 183 is now open for insertion of the Luminance/Color Bar signal. The area encompasses a little less than 5 crosshatch squares. If the

crosshatch positioning is adjusted to put a line at the top of the screen (line 37), there will be a crosshatch line at line 107, one at line 124 or 125, another at line 142, one at line 159 or 160, and another at line 177. Setting the Luminance/Color Bar display to run from line 126 (Binary 120 = 64 + 32 + 16 + 8) to line 158 (Binary 152 = 124 + 16 + 8 + 4), and adding Chroma at line 136 (124 + 4 + 2), then provides complete crosshatch squares above and below the color bar pattern.

The above allocations are purely arbitrary and may be varied widely according to requirements.

Variant Patterns. The Luminance/Color Bar display of the Ext Video display may be caused to occur twice in one half of the display and not at all in the other half by removing the "64" jumper from the start and stop segments (storing the jumper on an unused pin), but leaving the "128" jumper in place, if the duration of the segment is kept less than 48 lines.

A short-duration display in the top half of the screen, plus a longer-duration display from the same source in the second half of the display may be secured by programming a start and stop in the first half, and removing the "128" jumper only from the "start" column. In the second half of the display, the "stop" is still inhibited, so the source remains enabled from the second "start" point to the end of the field.

Special Notes

Line 21, Field 2. Line 21 of field 2 contains a half-line of video, which is driven from the convergence pattern generator at all times. Depending on the setting of the Convergence Pattern switches and position controls, this line may show a half-line of dots, a half of a horizontal crosshatch line, or nothing at all.

Start/Stop on the Same Line. A start and a stop for the same function should never be set to the same line. With several contradictory commands occupying the same nominal interval, the exact sequence of events is unpredictable (and in fact will change with changes in temperature), with the hazard that two video signals may be allowed to add, producing overmodulation. Under some circumstances, the adding may occur at line 21 of field 2.

This precaution does not apply if the jumpers are set for single displays (all jumpers at "0" or "+" positions) and the binary count setting is 15 or less.

CIRCUIT DESCRIPTION

General

The circuit description in the Type 140 Instruction manual is applicable to the 144 when operated with the COMP VIDEO PATTERN switch set to SINGLE. However, minor differences may occur between schematics and description as pin connectors have been added or pin connector lettering has been changed. These differences will not affect circuit operation. In MULT PATTERN, the following description applies.

EXTERNAL VIDEO PROCESSING

Program Gate

The Program Gate consists of all components shown on diagram 3b. The purpose of this circuitry is to select the appropriate line(s) on which the internal/external video signal will be displayed.

Five 10-diode 'AND' gates are driven by various timing signals obtained from the field counter. At the proper time (as determined by selectable pin connectors) a positive pulse is obtained and applied to the External Video Logic stage. These pulses are programmed at the factory for lines 74, 90, 106, 179, and 211.

External Video Logic

The External Video Logic stage consists of U3015 through U3030, transistors Q3002 through Q3016 and their associated circuitry (see diagram 12a). The purpose of this circuitry is to provide properly timed signals which will allow the insertion of the multipattern displays on the line(s) determined by the Program Gates.

To understand circuit operation, assume factory preset information to the Program Gate circuitry. Under these conditions, internal vertical blanking (VITS may or may not be present, depending on front-panel control settings) will be displayed on lines 1 through 21 of both fields, convergence pattern on lines 22 through 73, internal gray scale (luminance) on lines 74 through 89, internal color bars on lines 90 through 105, convergence pattern on lines 106 through 178, external video on lines 179 through 210, and convergence pattern on lines 211 to vertical blanking.

During vertical blanking, the vertical drive pulse turns Q3022 off, pulling pins 5 of U3015, U3020, and U3030 (set-reset flip-flops) high. Pins 6 go low and pins 7 high. With these outputs, Q3022 is off, allowing no external video to be displayed; Q3014 is off, allowing no internal gray scale to be displayed; and Q3016 is off, allowing no internal color bars to be displayed. (During color bar VITS, CR3016 is forward biased via S24 to turn Q3016 on for one line, allowing the color bar VITS.) Note that all inputs to U3010 are now low. Under these conditions, Q3004 could turn on, reverse biasing CR3004 and allowing convergence pattern to be displayed via Q3008 and Q3010. Since this is an undesirable condition during vertical blanking time (also during internal gray scale, color bar time, and external video time), some method of

convergence pattern lockout is needed. This is accomplished by Q3006, which is one input of a two-input "PHANTOM AND" gate, the other input being the output of U3010. Composite blanking turns Q3006 on, to hold Q3004 off. This action keeps CR3004 forward biased, and convergence pattern is locked out. To prevent any delay in convergence pattern lockout caused by Q3004 and Q3006, CR3009 is also forward biased by the composite blanking signal to insure lockout of convergence at the start of, and at the end of, vertical blanking.

At the end of vertical blanking, Q3002 turns on and pins 5 of U3015, U3020, and U3030 return to a low state. However, the output of the flip-flops will not change.

Composite Blanking now allows CR3004 and CR3009 to become reversed biased during active line time for lines 22 through 73, and the convergence pattern is displayed. Convergence gain is set by R3013.

At the beginning of line 74, a pulse from the Program Gate circuitry sets pin 1 of U3015A high, causing pins 7 to go low, pin 6 high. The high on pin 6 inhibits U3010 and convergence pattern is eliminated from the display. Pins 1 and 2 of U3025A are now both low, which turns Q3014 on, allowing the internally-generated gray scale to be displayed.

At the beginning of line 90, another pulse from the program gate circuitry sets pin 1 of U3020A high, causing pins 6 to go high, pin 7 low. U3025B now allows Q3016 to turn on, and the color bar pattern is displayed.

At the beginning of line 106, another positive pulse from the Program Gate circuitry sets pins 5 of U3015 and U3020 high. This action shuts Q3016 and Q3014 off, eliminating the color bar display; but sets U3010 as described earlier to display the convergence pattern.

At the beginning of line 179, pin 1 of U3030 is set high and pin 6 goes high. Pin 6 going high inhibits the convergence pattern being displayed, and turns Q3022 on to drive the external video circuitry.

Video Amplifier

The External Video Amplifier consists of all components on diagram 12b. The purpose of this circuitry is to provide external video from either or both external inputs, and present them on the display. Each input is a high impedance loop-thru input, and must be terminated into 75 ohms. A front-panel VIDEO WIPE control, R70, determines which input is to be displayed. This control will be discussed later. Since both the A and B amplifiers have identical circuitry, including clamps, only the A amplifier and clamp will be discussed.

The external video signal is applied to a standard RC coupled amplifier having a gain of about 4.5. R3025 and C3025 are provided to set the AC and DC stage gain. The signal is then applied to emitter follower Q3026.

Since the amplifier is AC coupled, some means of DC restoration is needed. This is accomplished by delaying the composite sync signal so that clamping will occur during the external video signal back porch time. The delay is accomplished via Q3042, Q3044, and Q3046. The delayed composite sync pulse then saturates Q3036, and clamps the external video signal at 0 volts during back porch time. L3036 and C3036 prevent any 3.58 MHz from interfering with the clamp circuitry. This clamp signal drives Q3028, which will be described later.

Switching the external video signal to display either A or B, or both A and B, is accomplished by Q3064, Q3068, Q3050, Q3052, and Q3056, which are dependent upon the setting of the front-panel EXT VIDEO WIPE control, R70. For this description, assume that R70 is at the B position, and an external video signal is applied to the external A input.

The positive pulse developed by U3030 during lines 179 through 211 is inverted by Q3022 (see diagram 12a) and applied to Q3072. Q3072 turns off, and if Q3070 is off, allows Q3066 to turn on. Q3070, driven by composite blanking, prevents any external video during sync time. With Q3066 turned on during active line time, current is available to the differential comparator, Q3064 and Q3068. Since R70 is set at +3.6 volts (B position), Q3064 will conduct according to its base drive. Base drive for Q3064 is a ramp produced by integration of the composite sync by R3071 and C3062. Ramp drive will allow switching at any point in time during an active line, as determined by the setting of R70. (For example, if both A and B were being displayed on an equal time-shared basis, one half of a particular line would contain video information from A and the second half of that same line would contain information from B.) The output pulse from Q3064 drives Q3050.

Q3050, Q3052, and Q3056 form another differential comparator with current supplied via Q3054. (If Q3066 is off, all current via Q3054 is through Q3056 to another differential comparator, Q3058 and Q3060. R3068 and R3069 divide the current in such a manner as to allow Q3060 to pass only the required current to offset any DC bias current requirements of Q3040 and Q3030, to hold the output of 0 volts.) Since R70 is at the B position, the drive to Q3050 turns off Q3056 and the current switches to Q3050. All current must now pass via Q3028 and Q3030. Any signal now driving Q3028 controls current through Q3030, and the desired video output is obtained.

MAINTENANCE

Replace existing circuit board pictures with the following. One board is new (EXTERNAL VIDEO PROCESSING). All other information in the Type 140 manual is applicable to the 144.

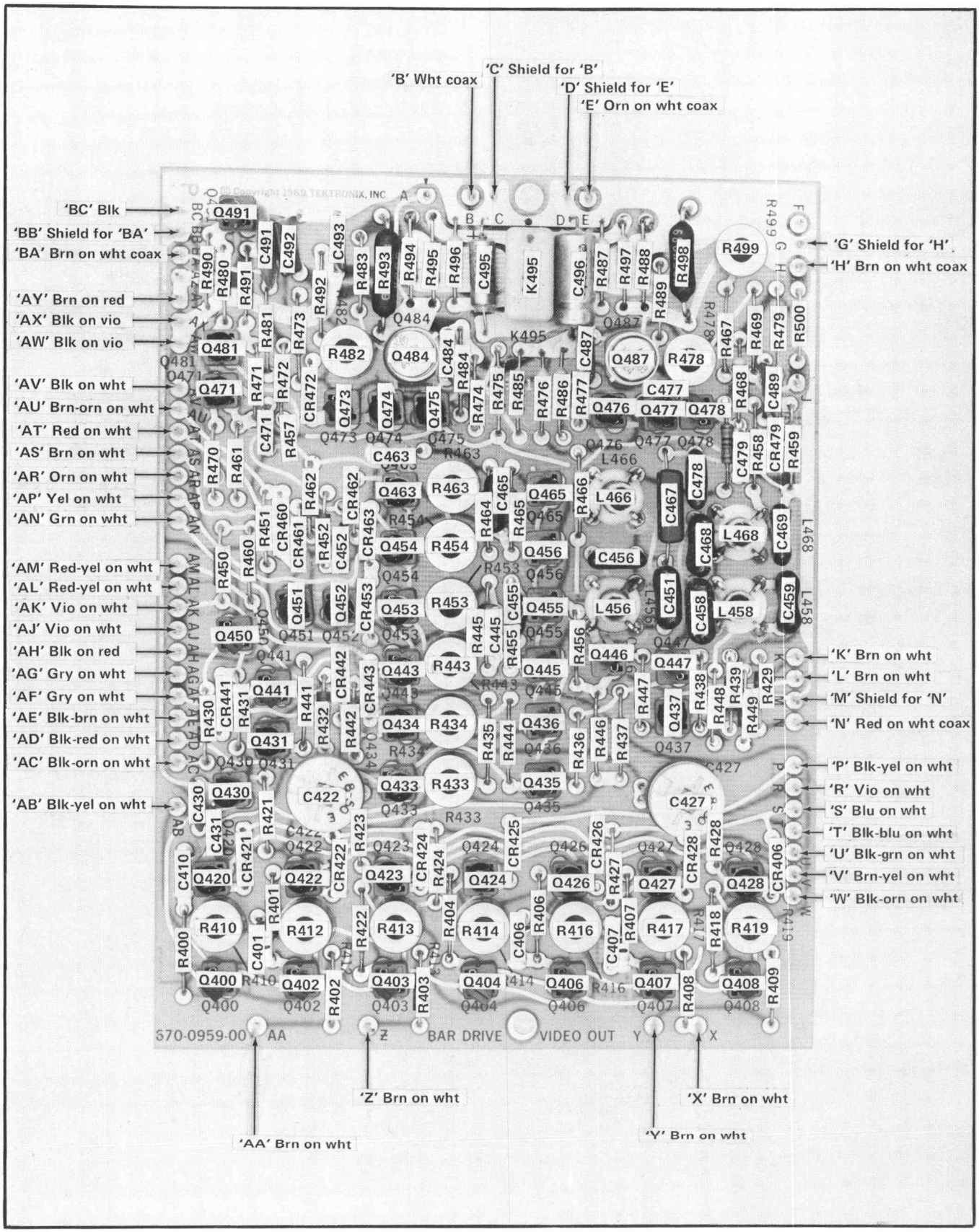

Fig. 3. BAR DRIVE and VIDEO OUT board; component identification and wire color code.

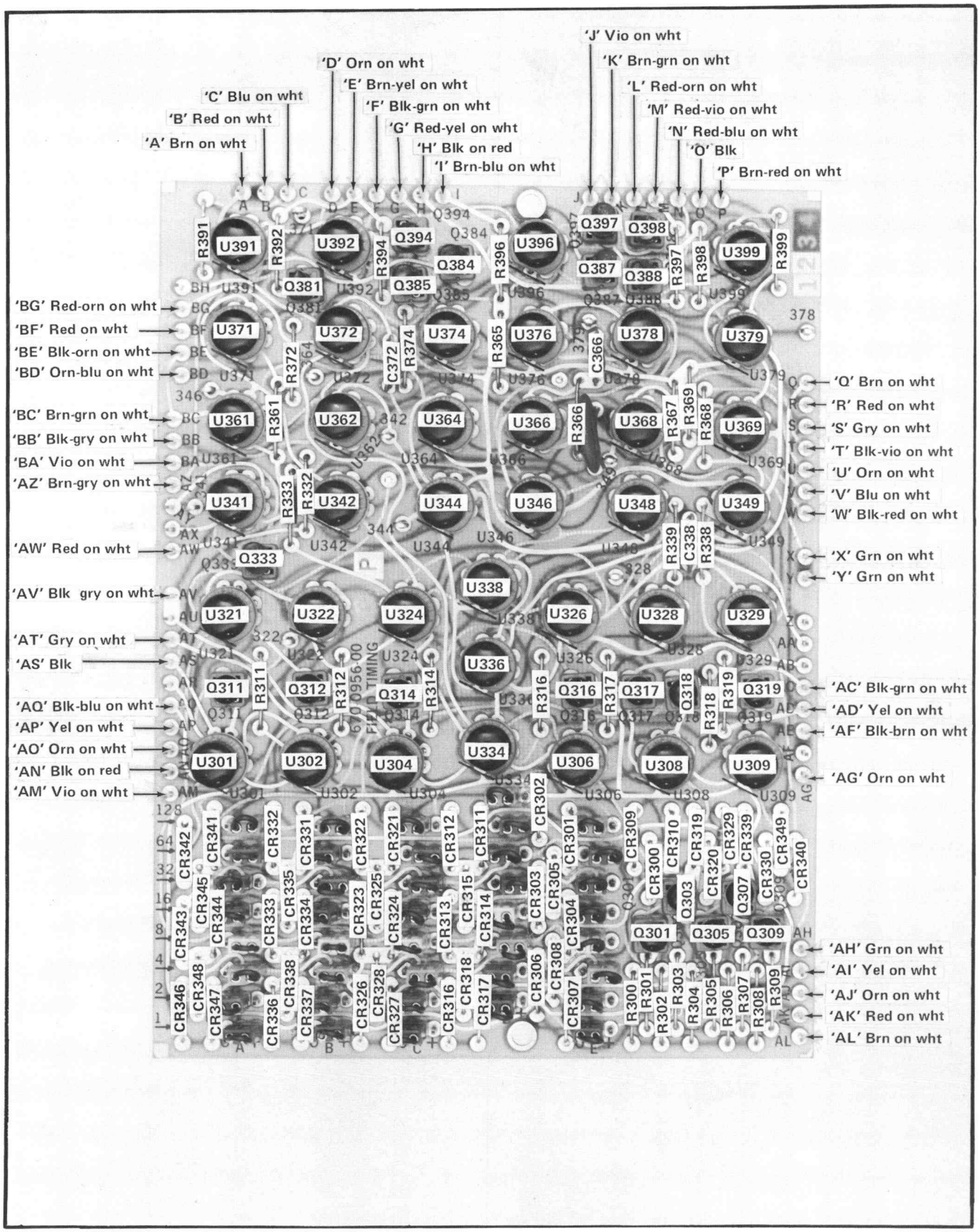

Fig. 4. FIELD TIMING board; component identification and wire color code.

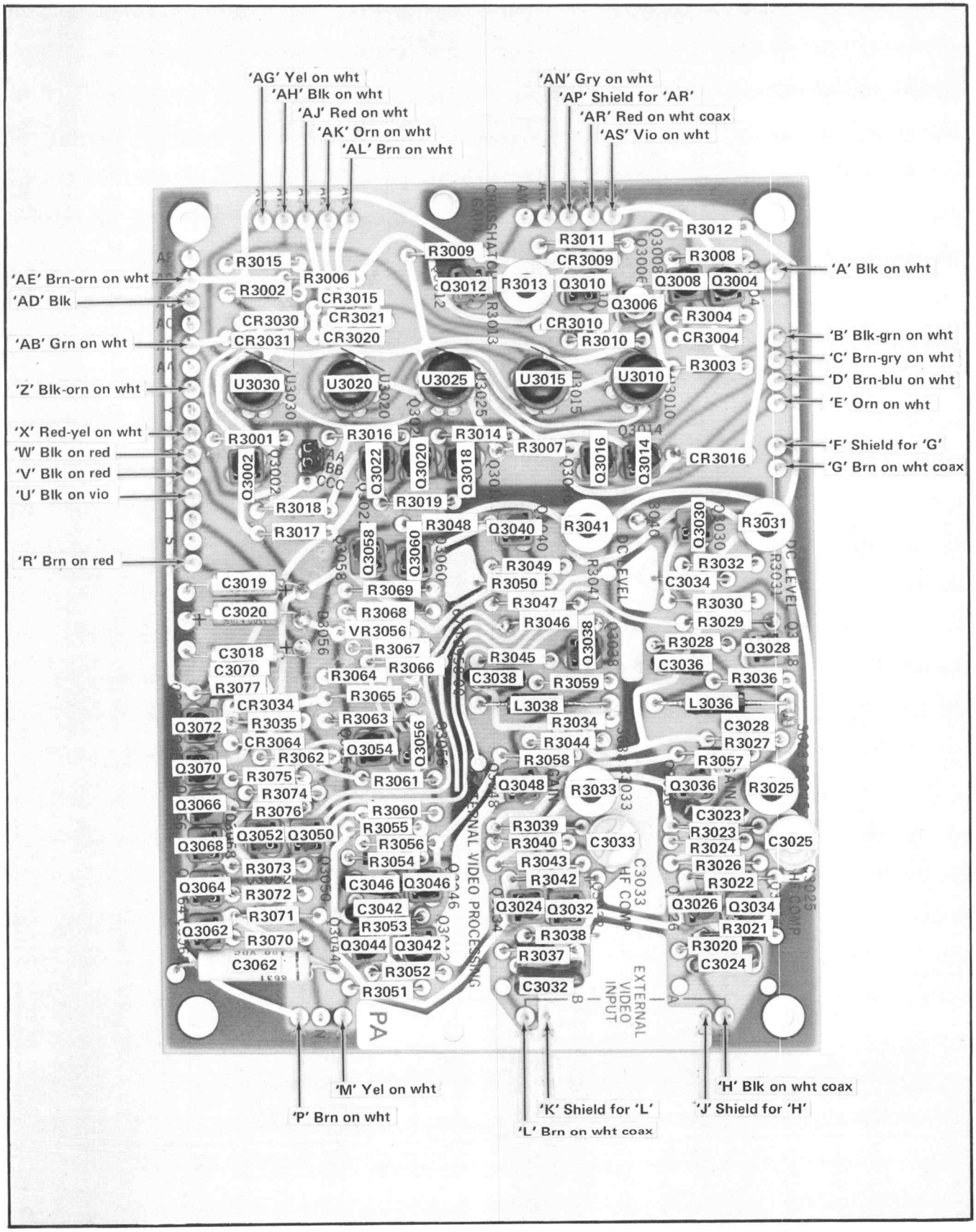

Fig. 5. EXTERNAL VIDEO PROCESSING board; component identification and wire color code.

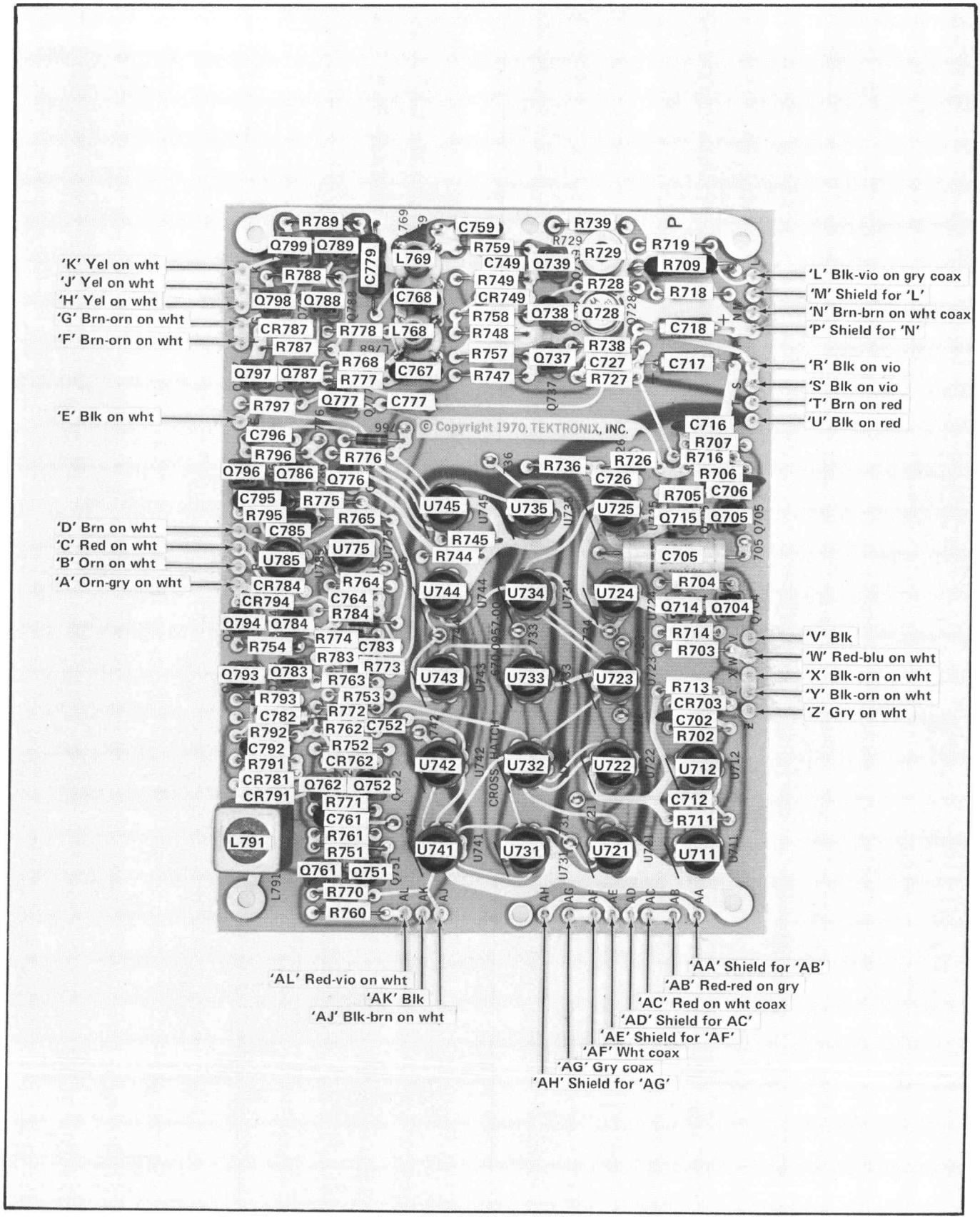

Fig. 6. CROSSHATCH and DOT GENERATOR board; component identification and wire color code.

CALIBRATION

With the COMP VIDEO PATTERN switch in the SINGLE position, this instrument can be calibrated as directed in the Type 140 manual. After completing the Type 140 calibration procedure, perform the following additional steps. A Type 140 NTSC Test Signal Generator is required to calibrate the 144.

1. Cable Connections

a. From the 144 rear-panel EXTERNAL VIDEO A input connector, connect a 75 ohm coaxial cable to the Type 140 Comp Video connector. Connect a second 75 ohm coaxial cable from the unused EXTERNAL VIDEO A input connector to the EXTERNAL VIDEO B input connector. Terminate the unused EXTERNAL VIDEO B input connector with a 75 ohm end-line termination.

b. From the 144 rear-panel SUBCARRIER INPUT connector, connect a 75 ohm coaxial cable to the Type 140 Subcarrier connector. Terminate the 144 unused SUBCARRIER INPUT connector with a 75 ohm end-line termination.

c. From the 144 rear-panel COMP SYNC INPUT connector, connect a 75 ohm coaxial cable to the Type 140 Comp Sync connector. From the unused 144 COMP SYNC INPUT connector, connect a 75 ohm coaxial cable and a 75 ohm termination to the test oscilloscope Trigger Input connector.

d. From the 144 COMP VIDEO connector, connect a 75 ohm coaxial and a 75 ohm termination to the Type 1A5 Input connector.

2. Control Settings

a. 144—COLOR BAR, all up; VIDEO, up; MOD STAIRCASE, all up; VITS, up; CONVERGENCE, up; SYNCHRONIZATION, all up except REF; PATTERN, MULT; APL/IRE LEVEL, 50%; LINE, 15; VERT and HORIZ POSITION, midrange; SUBCARRIER PHASE, as is; EXT VIDEO WIPE, CW.

b. Type 140—All switches to STANDARD SIGNAL position; all other switches, as is.

c. Test oscilloscope—Externally triggered at 10 μs/Cm.

d. Type 1A5—A input DC coupled at .2 Volts/Cm.

3. Procedure

a. Observing the test oscilloscope display, set the Type 140 Color Bar Setup switch to 0%. Note that one of the displayed waveforms changes amplitude. This signal will be used as the standard by which to calibrate the 144. Return the Type 140 Color Bar Setup switch to 10%.

b. Set the Type 1A5 Volts/Cm switch to 20 mV, Comparison Voltage Polarity switch to +, and the Amplitude control to position the display vertically on the CRT until the line pulse of the convergence pattern and the 75% white pulse of the standard signal are within the viewing area.

c. CHECK—Convergence pattern line pulse should align with the 75% white pulse.

d. ADJUST—R3013 (located on External Video Processing Board) to align the two pulses.

e. Rotate the Type 1A5 Amplitude control to position the setup levels of the display to CRT center.

f. CHECK—Setup levels should superimpose on each other.

g. ADJUST—R3031 to superimpose to setup levels on each other.

h. Set the 144 COMP VIDEO EXT VIDEO WIPE fully CCW.

i. Repeat parts f and g, except adjust R3041.

j. Set the Type 1A5 Volts/Cm switch to .2 V and the Polarity switch to 0.

k. CHECK—75% white pulses should superimpose on each other; color bars should superimpose on each other.

l. ADJUST—R3033 to superimpose the 75% white pulses, and C3033 to superimpose the color bars; repeat part k.

m. Set the 144 COMP VIDEO EXT VIDEO WIPE fully CW.

n. Repeat parts k and l, except adjust R3025 and C3025.

o. Remove the 75 ohm coaxial cable between the 144 rear-panel EXTERNAL VIDEO A and B INPUT connectors. Remove the 75 ohm end-line termination from B, and reconnect it to A.

p. Observing the test oscilloscope display, rotate the Type 1A5 Position control to position the blanking levels of the displays to CRT center. Then, set the Type 1A5 Volts/Cm switch to 1 mV.

q. CHECK—Observing the test oscilloscope display, rotate the 144 COMP VIDEO EXT VIDEO WIPE control from CW to CCW; crosstalk must be 10 mV or less peak to peak as measured on the blanking levels.

r. Disconnect the 75 ohm coaxial cable and 75 ohm end-line termination from the 144 EXTERNAL VIDEO INPUT A connector and reconnect them to the B connector.

s. Repeat part q, except rotate the WIPE control from CCW to CW.

t. Set the Type 1A5 Volts/Cm switch to 5 mV, Polarity switch to +, and rotate the Amplitude control to position the white level of the display to CRT center.

u. Set the 144 and Type 140 COLOR BAR R–Y and B–Y switches down.

v. Note and record amplitude difference between standard white level and the 144 white level.

w. Set the 144 and Type 140 COLOR BAR R–Y and B–Y switches to their up positions.

x. Note and record amplitude difference between standard color bar and 144 color bar. (Measure on yellow color bar.)

y. CHECK—Recorded amplitude in part v minus recorded amplitude in part x should be 30 mV or less.

z. Disconnect all test equipment and connections.

aa. Using the standard Type 140 calibration procedure as set forth in step 43, check return loss of the EXTERNAL VIDEO A and B INPUTS; should be 40 dB or better.

ab. Using the standard Type 140 calibration procedure as set forth in step 45, check differential gain and differential phase; differential gain should be 3% or less; differential phase should be 2° or less.

ac. Disconnect all test equipment and connections.

ELECTRICAL PARTS LIST

The following changes have been made to the appropriate parts lists for this instrument. When ordering replacement parts, specify instrument type, and serial number. Include the circuit number, part number and description of the desired item.

Values are fixed unless marked Variable.

Ckt. No.	Tektronix Part No.	Serial/Model No. Eff	Disc	Description
		CHASSIS		
		Inductors		
L20	108-0626-00		220 nH	
L30	108-0626-00		220 nH	
		Resistor		
R70	311-0008-00		2k	var
		Switch		
S15	260-0731-00		Lever	PATTERN
		FIELD TIMING Circuit Board Assembly		
	670-0956-00			Complete Board
		Semiconductor Devices, Diodes		
CR300	152-0185-00		Silicon	
CR301	152-0185-00		Silicon	
CR302	152-0185-00		Silicon	
CR303	152-0185-00		Silicon	
CR304	152-0185-00		Silicon	
CR305	152-0185-00		Silicon	
CR306	152-0185-00		Silicon	
CR307	152-0185-00		Silicon	
CR308	152-0185-00		Silicon	
CR309	152-0185-00		Silicon	
CR310	152-0185-00		Silicon	
CR311	152-0185-00		Silicon	
CR312	152-0185-00		Silicon	
CR313	152-0185-00		Silicon	
CR314	152-0185-00		Silicon	

Values are fixed unless marked Variable.

Ckt. No.	Tektronix Part No.	Serial/Model No. Eff	Disc	Description
				Semiconductor Devices, Diodes (cont)
CR315	152-0185-00			Silicon
CR316	152-0185-00			Silicon
CR317	152-0185-00			Silicon
CR318	152-0185-00			Silicon
CR319	152-0185-00			Silicon
CR320	152-0185-00			Silicon
CR321	152-0185-00			Silicon
CR322	152-0185-00			Silicon
CR323	152-0185-00			Silicon
CR324	152-0185-00			Silicon
CR525	152-0185-00			Silicon
CR326	152-0185-00			Silicon
CR327	152-0185-00			Silicon
CR328	152-0185-00			Silicon
CR329	152-0185-00			Silicon
CR330	152-0185-00			Silicon
CR331	152-0185-00			Silicon
CR332	152-0185-00			Silicon
CR333	152-0185-00			Silicon
CR334	152-0185-00			Silicon
CR335	152-0185-00			Silicon
CR336	152-0185-00			Silicon
CR337	152-0185-00			Silicon
CR338	152-0185-00			Silicon
CR339	152-0185-00			Silicon
CR340	152-0185-00			Silicon
CR341	152-0185-00			Silicon
CR342	152-0185-00			Silicon
CR343	152-0185-00			Silicon
CR344	!52-0185-00			Silicon
CR345	152-0185-00			Silicon
CR346	152-0185-00			Silicon
CR347	152-0185-00			Silicon
CR348	152-0185-00			Silicon
CR349	152-0185-00			Silicon

ELECTRICAL PARTS LIST (cont)

Values are fixed unless marked Variable.

Ckt. No.	Tektronix Part No.	Serial/Model No. Eff	Disc	Description			
				Transistors			
Q301	151-0224-00			2N3692			
Q303	151-0224-00			2N3692			
Q305	151-0224-00			2N3692			
Q307	151-0224-00			2N3692			
Q309	151-0224-00			2N3692			
				Resistors			
R300	315-0333-00			33k	1/4 W	5%	comp
R301	315-0222-00			2.2k	1/4 W	5%	comp
R302	315-0333-00			33k	1/4 W	5%	comp
R303	315-0222-00			2.2k	1/4 W	5%	comp
R304	315-0333-00			33k	1/4 W	5%	comp
R305	315-0222-00			2.2k	1/4 W	5%	comp
R306	315-0333-00			33k	1/4 W	5%	comp
R307	315-0222-00			2.2k	1/4 W	5%	comp
R308	315-0333-00			33k	1/4 W	5%	comp
R309	315-0222-00			2.2k	1/4 W	5%	comp

BAR DRIVE/VIDEO OUT Circuit Board Assembly

	670-0959-00			Complete Board			
				Capacitor			
C477	283-0185-00			2.5pF	5%	50 V	cer
				Resitors			
R429	315-0270-00			27Ω	1/4 W	5%	comp
R500	315-0910-00			91Ω	1/4 W	5%	comp

ELECTRICAL PARTS LIST (cont)

Values are fixed unless marked Variable.

Ckt. No.	Tektronix Part No.	Serial/Model No. Eff	Disc	Description		
				CROSSHATCH & DOT GENERATOR Circuit Board Assembly		
	670-0957-00			Complete Board		
				Capacitor		
C738	281-0613-00			10pF	200 V	NPO
				VIDEO PROCESSING Circuit Board Assembly		
	670-0958-00			Complete Board		
				Capacitors		
C3018	290-0415-00			5.6µF	35 V	Elect
C3019	290-0415-00			5.6µF	35 V	Elect
C3020	290-0415-00			5.6µF	35 V	Elect
C3023	283-0004-00			.02µF	150 V	disc
C3024	283-0194-00			4.7µF	50 V	disc
C3025	283-0092-00			9-35pF		cer
C3028	283-0111-00			.1µF	50 V	disc
C3032	283-0194-00			4.7µF	50 V	disc
C3033	283-0092-00			9-35pF		cer
C3034	283-0111-00			.1µF	50 V	disc
C3036	283-0598-00			253pF	300 V	mica
C3038	283-0598-00			253pF	300 V	mica
C3042	283-0672-00			200pF	500 V	mica
C3046	283-0672-00			200 pF	500 V	mica
C3062	285-0596-00			.01µF	100 V	PTM
C3070	281-0509-00			15pF	500 V	cer

ELECTRICAL PARTS LIST (cont)

Values are fixed unless marked Variable.

Ckt. No.	Tektronix Part No.	Serial/Model No. Eff	Disc	Description			
				Semiconductor Devices, Diodes			
CR3004	152-0185-00			Silicon			
CR3009	152-0185-00			Silicon			
CR3010	152-0185-00			Silicon			
CR3015	152-0185-00			Silicon			
CR3016	152-0075-00			Germanium			
CR3020	152-0185-00			Silicon			
CR3021	152-0185-00			Silicon			
CR3030	152-0185-00			Silicon			
CR3031	152-0185-00			Silicon			
CR3034	152-0185-00			Silicon			
VR3056	152-0127-00			Zener, 1N755A, 7.5 volts			
CR3064	152-0185-00			Silicon			
				Inductors			
L3036	108-0057-00			8.8 μH			
L3038	108-0057-00			8.8 μH			
				Resistors			
R3001	315-0101-00			100Ω	1/4 W	5%	comp
R3002	315-0103-00			1k	1/4 W	5%	comp
R3003	315-0272-00			2.7k	1/4 W	5%	comp
R3004	315-0681-00			680Ω	1/4 W	5%	comp
R3006	315-0272-00			2.7k	1/4 W	5%	comp
R3007	315-0272-00			2.7k	1/4 W	5%	comp
R3008	315-0101-00			100Ω	1/4 W	5%	comp
R3009	315-0681-00			680Ω	1/4 W	5%	comp
R3010	315-0102-00			1k	1/4 W	5%	comp
R3011	321-0258-00			4.75k	1/8 W	1%	prec
R3012	315-0151-00			150Ω	1/4 W	5%	comp

ELECTRICAL PARTS LIST (cont)

Values are fixed unless marked Variable.

Ckt. No.	Tektronix Part No.	Serial/Model No. Eff	Disc	Description			
				Resistors (cont)			
R3013	311-0950-00			10k	1/2 W	var	
R3014	315-0272-00			2.7k	1/4 W	5%	comp
R3015	315-0471-00			470Ω	1/4 W	5%	comp
R3016	315-0272-00			2.7k	1/4 W	5%	comp
R3017	315-0272-00			2.7k	1/4 W	5%	comp
R3018	315-0272-00			2.7k	1/4 W	5%	comp
R3019	315-0272-00			2.7k	1/4 W	5%	comp
R3020	315-0102-00			1k	1/4 W	5%	comp
R3021	315-0203-00			20k	1/4 W	5%	comp
R3022	321-0222-00			2k	1/8 W	1%	prec
R3023	321-0218-00			1.82k	1/8 W	1%	prec
R3024	315-0152-00			1.5k	1/4 W	5%	comp
R3025	311-0884-00			100Ω	1/2 W	var	
R3026	321-0170-00			576Ω	1/8 W	1%	prec
R3027	315-0472-00			4.7k	1/4 W	5%	comp
R3028	315-0101-00			100Ω	1/4 W	5%	comp
R3029	321-0137-00			261Ω	1/8 W	1%	prec
R3030	321-0177-00			681Ω	1/8 W	1%	prec
R3031	311-0883-00			50k	1/2 W	var	
R3032	315-0273-00			27k	1/4 W	5%	comp
R3033	311-0884-00			100Ω	1/2 W	var	
R3034	315-0221-00			220Ω	1/4 W	5%	comp
R3035	315-0105-00			1M	1/4 W	5%	comp
R3036	315-0270-00			27Ω	1/4 W	5%	comp
R3037	315-0102-00			1k	1/4 W	5%	comp

Values are fixed unless marked Variable.

Ckt. No.	Tektronix Part No.	Serial/Model No. Eff	Disc	Description			
				Resistors (cont)			
R3038	315-0203-00			20k	1/4 W	5%	comp
R3039	321-0218-00			1.82k	1/8 W	1%	prec
R3040	315-0152-00			1.5k	1/4 W	5%	comp
R3041	311-0883-00			50k	1/2 W	var	
R3042	321-0222-00			2k	1/8 W	1%	prec
R3043	321-0170-00			576Ω	1/8 W	1%	prec
R3044	315-0472-00			4.7k	1/4 W	5%	comp
R3045	315-0101-00			100Ω	1/4 W	5%	comp
R3046	321-0137-00			261Ω	1/8 W	1%	prec
R3047	321-0177-00			681Ω	1/8 W	1%	prec
R3048	321-0247-00			3.65k	1/8 W	1%	prec
R3049	315-0273-00			27k	1/4 W	5%	comp
R3050	315-0221-00			220Ω	1/4 W	5%	comp
R3051	315-0272-00			2.7k	1/4 W	5%	comp
R3052	315-0102-00			1k	1/4 W	5%	comp
R3053	315-0303-00			30k	1/4 W	5%	comp
R3054	315-0102-00			1k	1/4 W	5%	comp
R3055	315-0623-00			62k	1/4 W	5%	comp
R3056	315-0512-00			5.1k	1/4 W	5%	comp
R3057	315-0512-00			5.1k	1/4 W	5%	comp
R3058	315-0512-00			5.1k	1/4 W	5%	comp
R3059	315-0270-00			27Ω	1/4 W	5%	comp
R3060	315-0102-00			1k	1/4 W	5%	comp
R3061	315-0102-00			1k	1/4 W	5%	comp
R3062	315-0105-00			1M	1/4 W	5%	comp
R3063	321-0179-00			715Ω	1/8 W	1%	prec
R3064	321-0265-00			5.6k	1/8 W	1%	prec
R3065	321-0286-00			9.31k	1/8 W	1%	prec
R3066	315-0682-00			6.8k	1/4 W	5%	comp
R3067	315-0102-00			1k	1/4 W	5%	comp

Values are fixed unless marked Variable.

Ckt. No.	Tektronix Part No.	Serial/Model No. Eff	Disc	Description			
				Resistors (cont)			
R3068	321-0137-00			261Ω	1/8 W	1%	prec
R3069	321-0177-00			681Ω	1/8 W	1%	prec
R3070	315-0272-00			2.7k	1/4 W	5%	comp
R3071	321-0304-00			14.3k	1/8 W	1%	prec
R3072	315-0101-00			100Ω	1/4 W	5%	comp
R3073	315-0472-00			4.7k	1/4 W	5%	comp
R3074	315-0472-00			4.7k	1/4 W	5%	comp
R3075	315-0472-00			4.7k	1/4 W	5%	comp
R3076	315-0222-00			2.2k	1/4 W	5%	comp
R3077	315-0272-00			217k	1/4 W	5%	comp
				Integrated Circuits			
U3010	156-0011-00			Medium Power Dual 2-Input Gate Replaceable by Fairchild μL914			
U3015	156-0011-00			Medium Power Dual 2-Input Gate Replaceable by Fairchild μL914			
U3020	156-0011-00			Medium Power Dual 2-Input Gate Replaceable by Fairchild μL914			
U3025	156-0011-00			Medium Power Dual 2-Input Gate Replaceable by Fairchild μL914			
U3030	156-0011-00			Medium Power Dual 2-Input Gate Replaceable by Fairchild μL914			
				Transistors			
Q3002	151-0219-00			2N4250			
Q3004	151-0225-00			2N3563			
Q3006	151-0127-00			2N2369			
Q3008	151-0225-00			2N3563			
Q3010	151-0192-00			Tek Spec NPN			
Q3012	151-0192-00			Tek Spec NPN			
Q3014	151-0207-00			2N3415			
Q3016	151-0207-00			2N3415			
Q3018	151-0225-00			2N3563			
Q3020	151-0225-00			2N3563			

Values are fixed unless marked Variable.

Ckt. No.	Tektronix Part No.	Serial/Model No. Eff	Disc	Description
				Transistors (cont)
Q3022	151-0224-00			2N3692
Q3024	151-0216-00			Tek Spec NPN
Q3026	151-0216-00			Tek Spec NPN
Q3028	151-0192-00			Tek Spec NPN
Q3030	151-0192-00			Tek Spec NPN
Q3032	151-0216-00			Tek Spec NPN
Q3034	151-0216-00			Tek Spec NPN
Q3036	151-0188-00			2N3906
Q3038	151-0192-00			Tek Spec NPN
Q3040	151-0192-00			Tek Spec NPN
Q3042	151-0225-00			2N3563
Q3044	151-0221-00			2N4258
Q3046	151-0221-00			2N4258
Q3048	151-0188-00			2N3906
Q3050	151-0192-00			Tek Spec NPN
Q3052	151-0192-00			Tek Spec NPN
Q3054	151-0224-00			2N3692
Q3056	151-0192-00			Tek Spec NPN
Q3058	151-0192-00			Tek Spec NPN
Q3060	151-0192-00			Tek Spec NPN
Q3062	151-0192-00			Tek Spec NPN
Q3064	151-0188-00			2N3906
Q3066	151-0188-00			2N3906
Q3068	151-0188-00			2N3906
Q3070	151-0225-00			2N3563
Q3072	151-0225-00			2N3563

MECHANICAL PARTS LIST

Fig. & Index No.	Tektronix Part No.	Serial/Model No. Eff	Disc	Qty	1 2 3 4 5	Description
						FIELD TIMING Circuit Board Assembly
388-1320-00				1		Circuit Board
351-0169-01				5		Holder, Terminal, 2 pin, brown
351-0169-02				5		Holder, terminal, 2 pin, red
351-0169-03				5		Holder, terminal, 2 pin, orange
351-0169-04				5		Holder, terminal, 2 pin, yellow
351-0169-05				5		Holder, terminal, 2 pin, green
351-0169-06				5		Holder, terminal, 2 pin, blue
351-0169-07				5		Holder, terminal, 2 pin, violet
351-0169-08				5		Holder, terminal, 2 pin, gray
136-0220-00				5		Socket, transistor, 3 pin
131-0707-00				80		Terminal, connector, miniature, P.V.
131-0589-00				5		Terminal, pin, .46 high
						EXTERNAL VIDEO PROCESSING Circuit Board Assembly
388-1750-00				1		Circuit Board
175-0733-00				1		Holder, terminal, black
214-0579-00				3		Pin, test point
136-0237-00				5		Socket, integrated circuit, 8 pin
136-0220-00				36		Socket, transistor, 3 pin, square
131-0707-00				2		Terminal, pin
131-0608-00				5		Terminal, pin, .365 high
131-0589-00				38		Terminal, pin, .46 high
						CROSSHATCH Circuit Board Assembly
388-1751-00				1		Circuit Board
131-0589-00				4		Terminal, pin, .46 high
						BAR DRIVE & VIDEO OUT Circuit Board Assembly
388-1753-00				1		Circuit Board
131-0589-00				5		Terminal, pin, .46 high

MECHANICAL PARTS LIST (cont)

Fig. & Index No.	Tektronix Part No.	Serial/Model No. Eff	Disc	Qty	1 2 3 4 5	Description
						FRONT & CABINET Assembly
366-0215-02				1		Knob, gray, PATTERN
366-1026-00				1		Knob, gray, EXT VIDEO WIPE
333-1357-00				1		Panel, front, 144
333-1358-00				1		Panel, front, R144
386-1861-00				1		Subpanel, front
386-1606-01				1		Panel, rear
131-0621-00				12		Terminal, connector
						ACCESSORIES
011-0103-02				2		Termination, 75Ω, feed thru, BNC
013-0117-00				1		Kit, jumper terminal, 1 each color
070-1084-00				1		Manual, instruction
161-0036-00				1		Cable assembly, power, 3 wire 7 1/2 feet long
351-0195-00*				1		Track, slide, stationary & intersection

* R144 only.

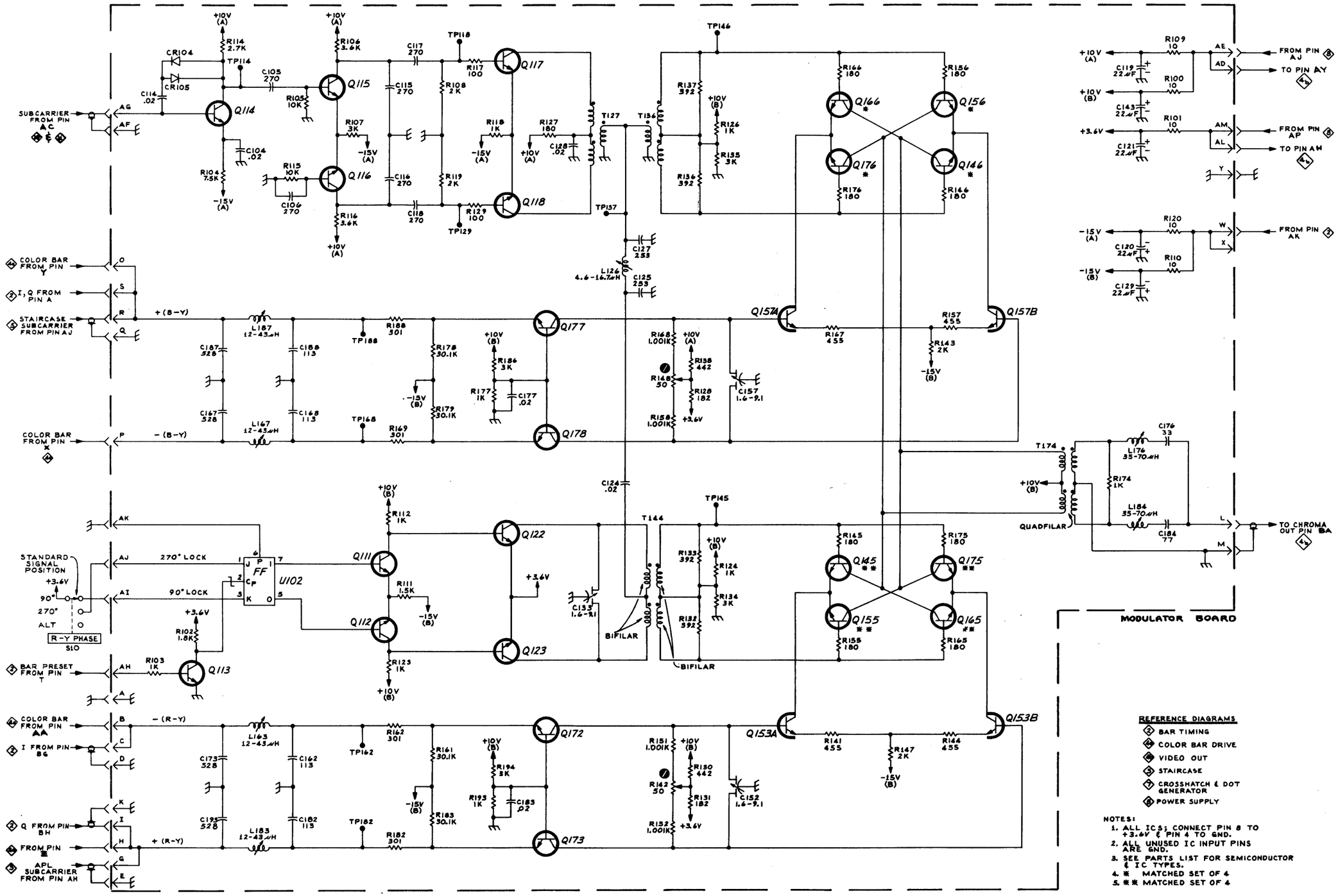

REFERENCE DIAGRAMS

- BAR TIMING
- COLOR BAR DRIVE
- VIDEO OUT
- STAIRCASE
- CROSSHATCH & DOT GENERATOR
- POWER SUPPLY

NOTES:

1. ALL ICS; CONNECT PIN 8 TO +3.6V & PIN 4 TO GND.
2. ALL UNUSED IC INPUT PINS ARE GND.
3. SEE PARTS LIST FOR SEMICONDUCTOR & IC TYPES.
4. * MATCHED SET OF 4
5. ** MATCHED SET OF 4

144/R144

MODULATOR 1 WLB 10/70

Ⓐ1

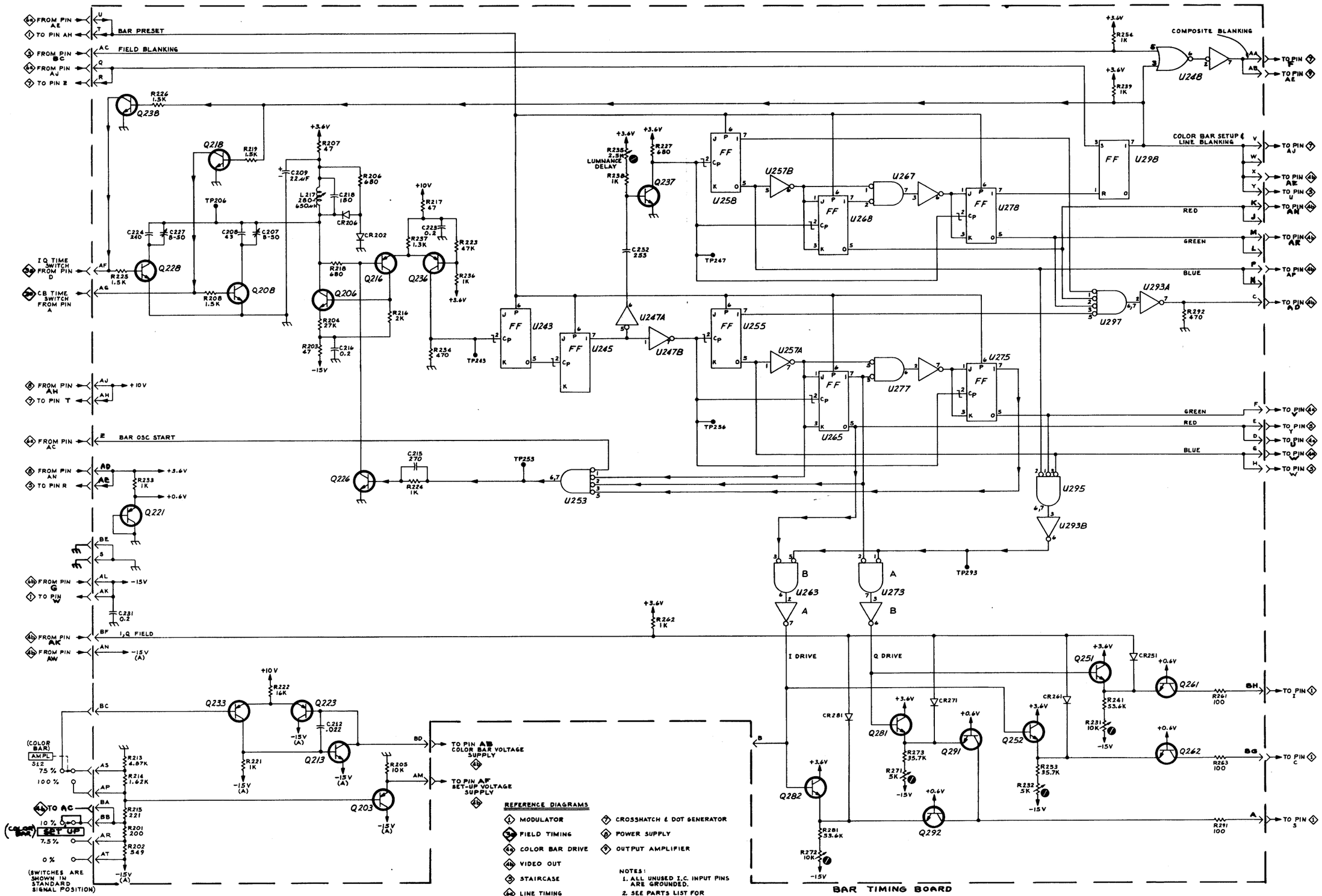

144/R144

BAR TIMING 2 WLB 1070

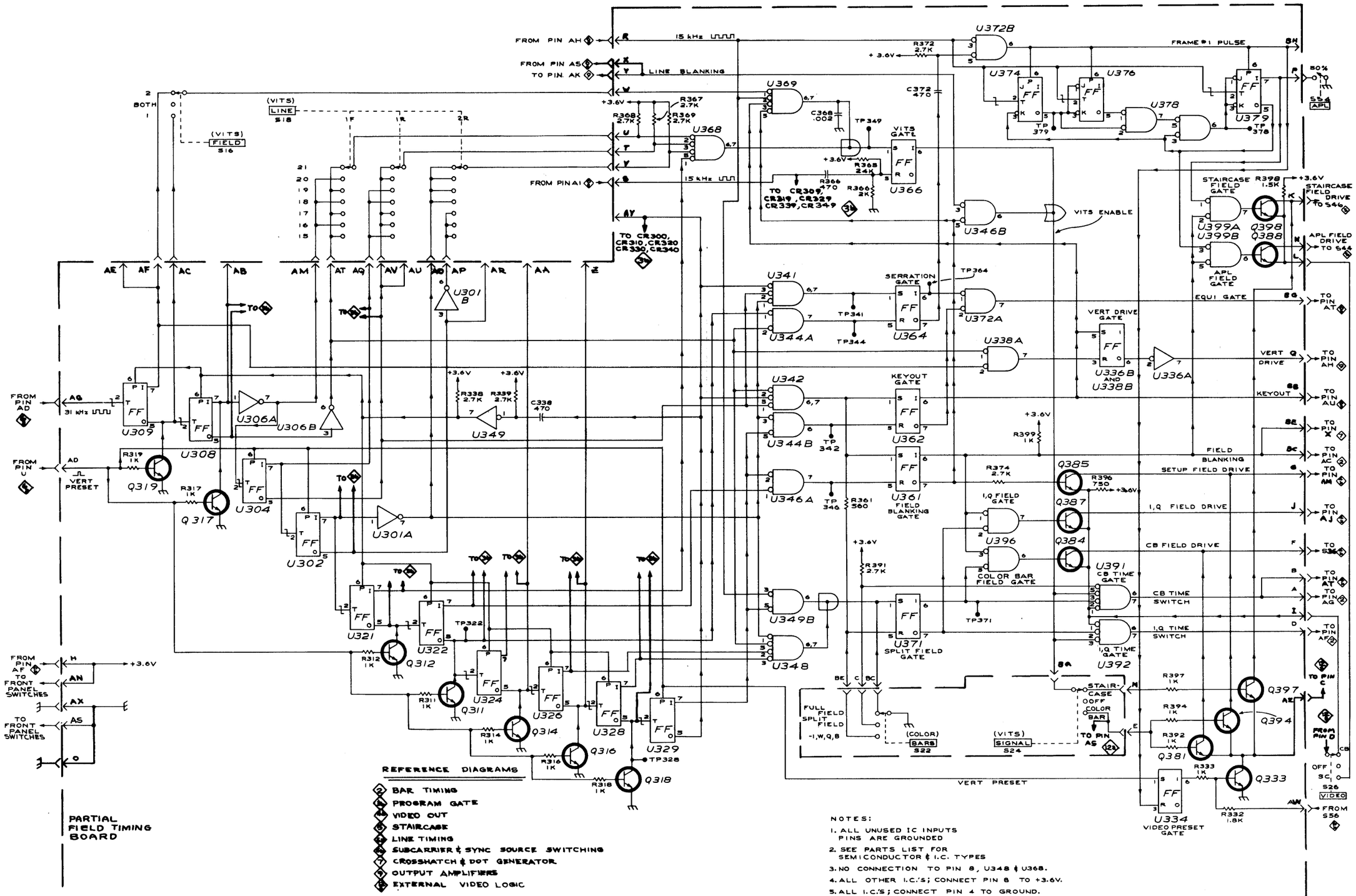
FROM PIN AH
FROM PIN AS
TO PIN AK
FROM PIN AI
15 kHz
LINE BLANKING
FRAME #1 PULSE
U372B
U374
U376
U378
U379
U369
U368
U366
VITS GATE
U346B
VITS ENABLE
STAIRCASE FIELD GATE
U399A
U399B
APL FIELD GATE
Q398
Q388
STAIRCASE FIELD DRIVE TO S46
APL FIELD DRIVE TO S44
EQUI GATE
TO PIN AT
U341
U344A
SERRATION GATE
U364
U372A
U338A
VERT DRIVE GATE
U336B AND U338B
U336A
VERT Q DRIVE
KEYOUT
U342
U344B
KEYOUT GATE
U362
U361 FIELD BLANKING GATE
FIELD BLANKING
SETUP FIELD DRIVE
I,Q FIELD DRIVE
CB FIELD DRIVE
U346A
U396 COLOR BAR FIELD GATE
I,Q FIELD GATE
Q385
Q387
Q384
U391 CB TIME GATE
CB TIME SWITCH
I,Q TIME SWITCH
I,Q TIME GATE
U392
U349B
U348
U371 SPLIT FIELD GATE
FULL FIELD
SPLIT FIELD
-I,W,Q,B
(COLOR) BARS S22
(VITS) SIGNAL S24
STAIRCASE OFF COLOR BAR
TO PIN AS
VERT PRESET
Q397
Q394
Q381
Q333
U334 VIDEO PRESET GATE
FROM S56
TO PIN C
FROM PIN D
S26 VIDEO
U309
U306A
U306B
U308
U304
U302
U301A
U301B
U349
Q319
Q317
U321
U322
Q312
U324
Q311
U326
Q314
U328
Q316
U329
Q318
FROM PIN AD
FROM PIN U
FROM PIN AF
TO FRONT PANEL SWITCHES
PARTIAL FIELD TIMING BOARD
REFERENCE DIAGRAMS
BAR TIMING
PROGRAM GATE
VIDEO OUT
STAIRCASE
LINE TIMING
SUBCARRIER & SYNC SOURCE SWITCHING
CROSSHATCH & DOT GENERATOR
OUTPUT AMPLIFIERS
EXTERNAL VIDEO LOGIC
NOTES:
1. ALL UNUSED IC INPUTS PINS ARE GROUNDED
2. SEE PARTS LIST FOR SEMICONDUCTOR & I.C. TYPES
3. NO CONNECTION TO PIN 8, U348 & U368.
4. ALL OTHER I.C.'S; CONNECT PIN 8 TO +3.6V.
5. ALL I.C.'S; CONNECT PIN 4 TO GROUND.
6. SWITCHES ARE SHOWN IN STANDARD SIGNAL POSITION
VRS 1070
FIELD TIMING

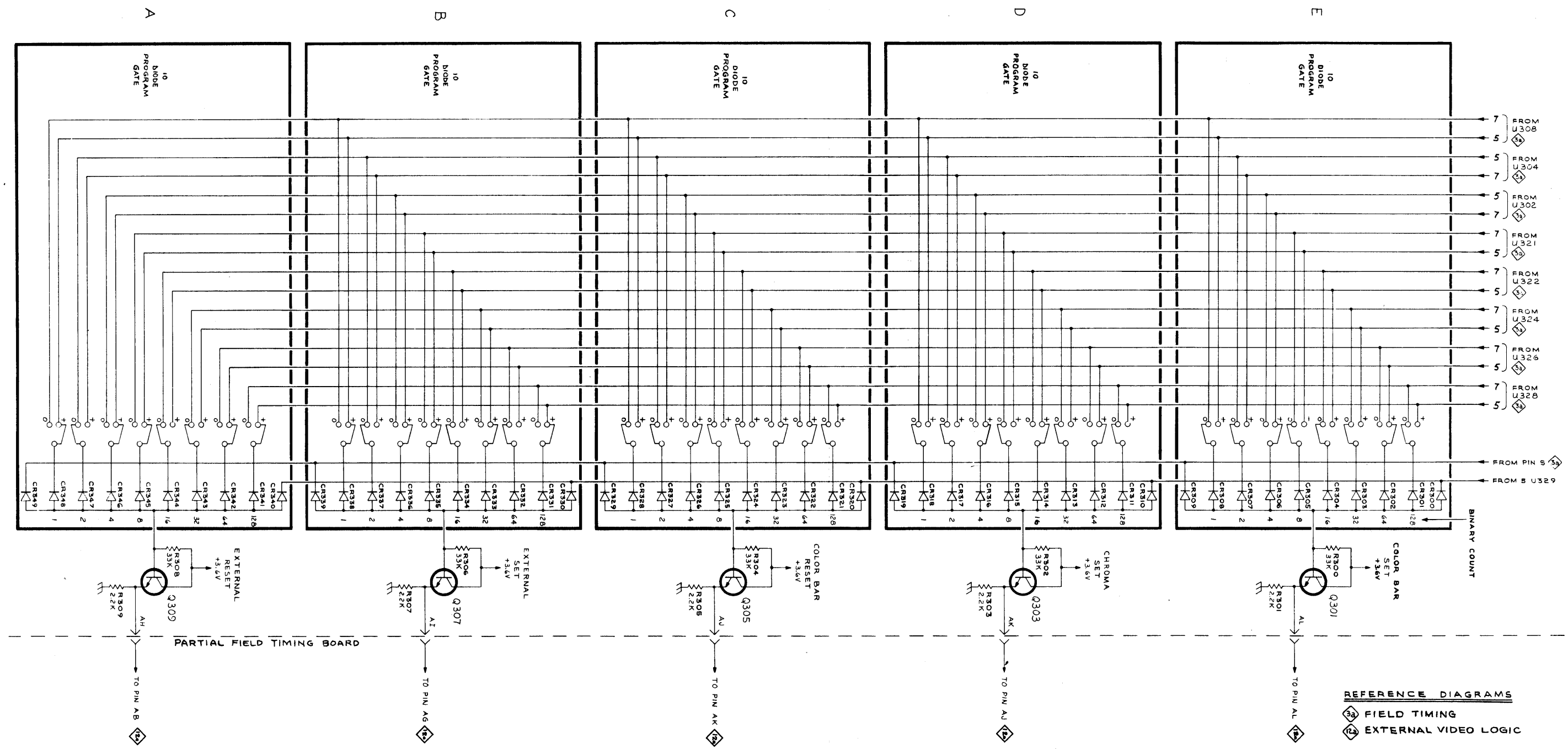

144 / R144

1070

PROGRAM GATE 3b

Ⓐ1

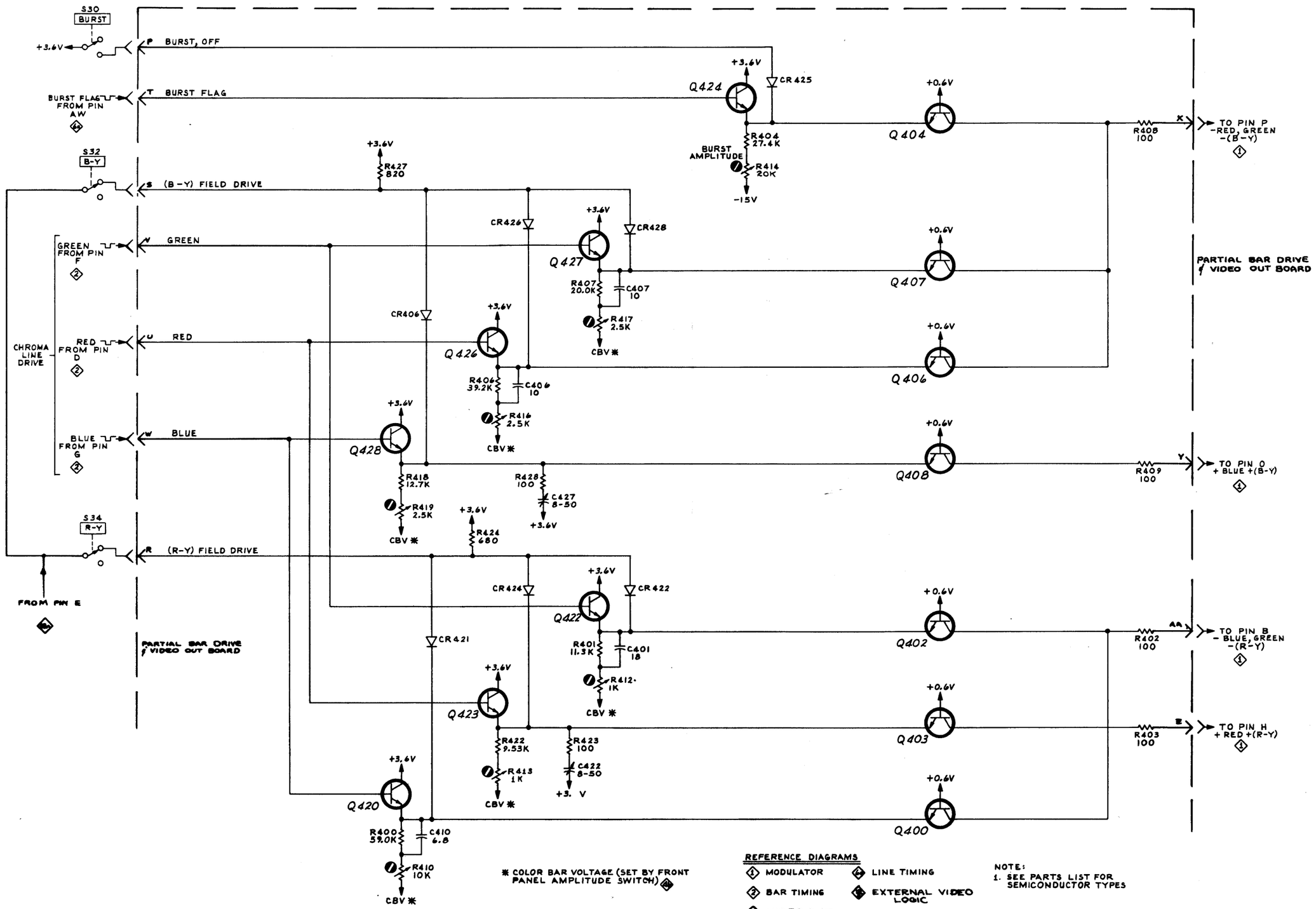

144/R144

COLOR BAR DRIVE 4a WLB 10TO

Ⓐ1

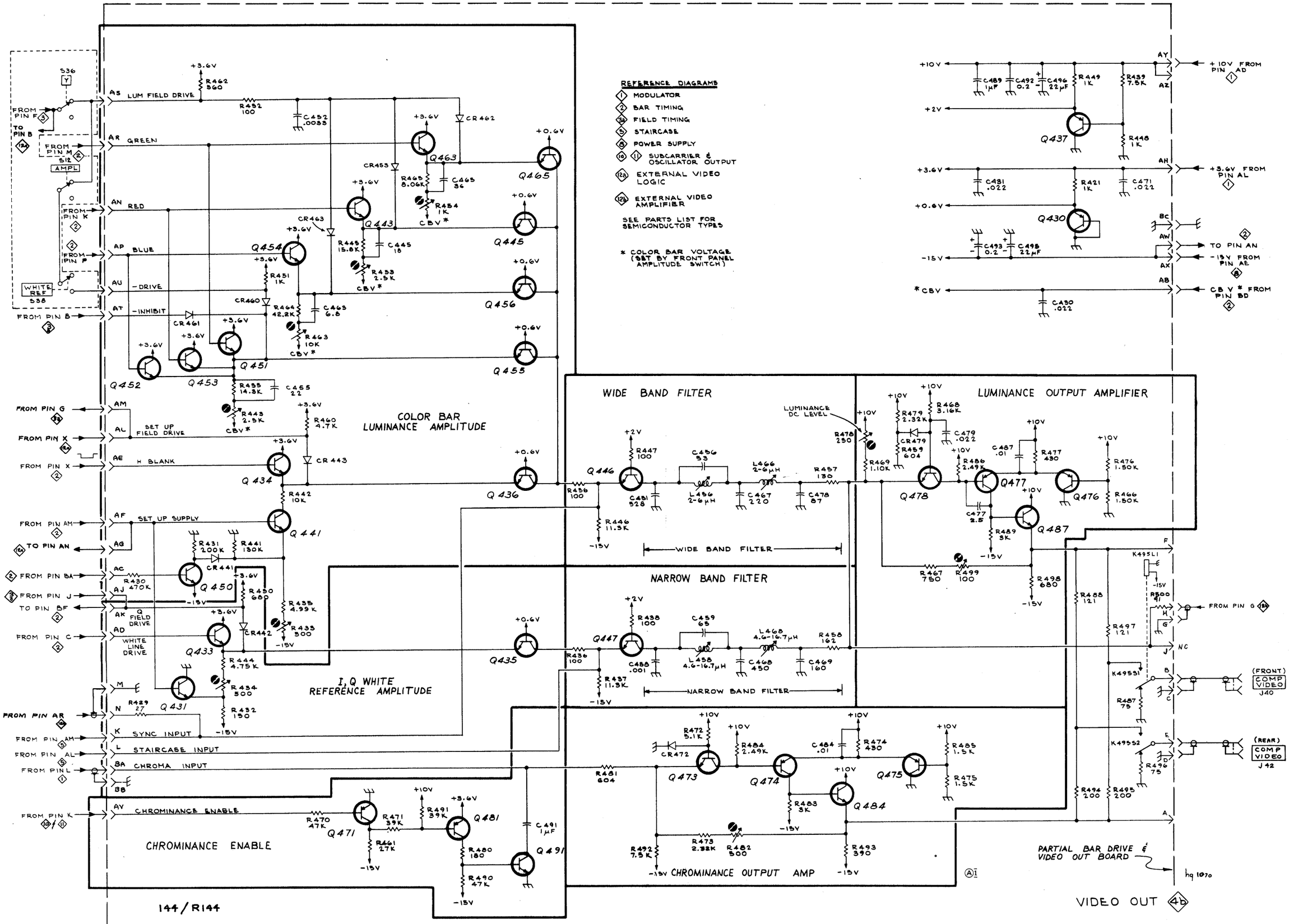
REFERENCE DIAGRAMS
1 MODULATOR
2 BAR TIMING
3a FIELD TIMING
5 STAIRCASE
8 POWER SUPPLY
10 11 SUBCARRIER & OSCILLATOR OUTPUT
12a EXTERNAL VIDEO LOGIC
12b EXTERNAL VIDEO AMPLIFIER
SEE PARTS LIST FOR SEMICONDUCTOR TYPES
* COLOR BAR VOLTAGE (SET BY FRONT PANEL AMPLITUDE SWITCH)
COLOR BAR LUMINANCE AMPLITUDE
I, Q WHITE REFERENCE AMPLITUDE
CHROMINANCE ENABLE
WIDE BAND FILTER
NARROW BAND FILTER
LUMINANCE OUTPUT AMPLIFIER
CHROMINANCE OUTPUT AMP
PARTIAL BAR DRIVE & VIDEO OUT BOARD
VIDEO OUT 4b
144/R144
LUM FIELD DRIVE
GREEN
RED
BLUE
-DRIVE
-INHIBIT
SET UP FIELD DRIVE
H BLANK
SET UP SUPPLY
Q FIELD DRIVE
WHITE LINE DRIVE
SYNC INPUT
STAIRCASE INPUT
CHROMA INPUT
CHROMINANCE ENABLE
LUMINANCE DC LEVEL
+10V FROM PIN AD
+3.6V FROM PIN AL
TO PIN AN
-15V FROM PIN AE
CBV * FROM PIN BD
FROM PIN G
(FRONT) COMP VIDEO J40
(REAR) COMP VIDEO J42

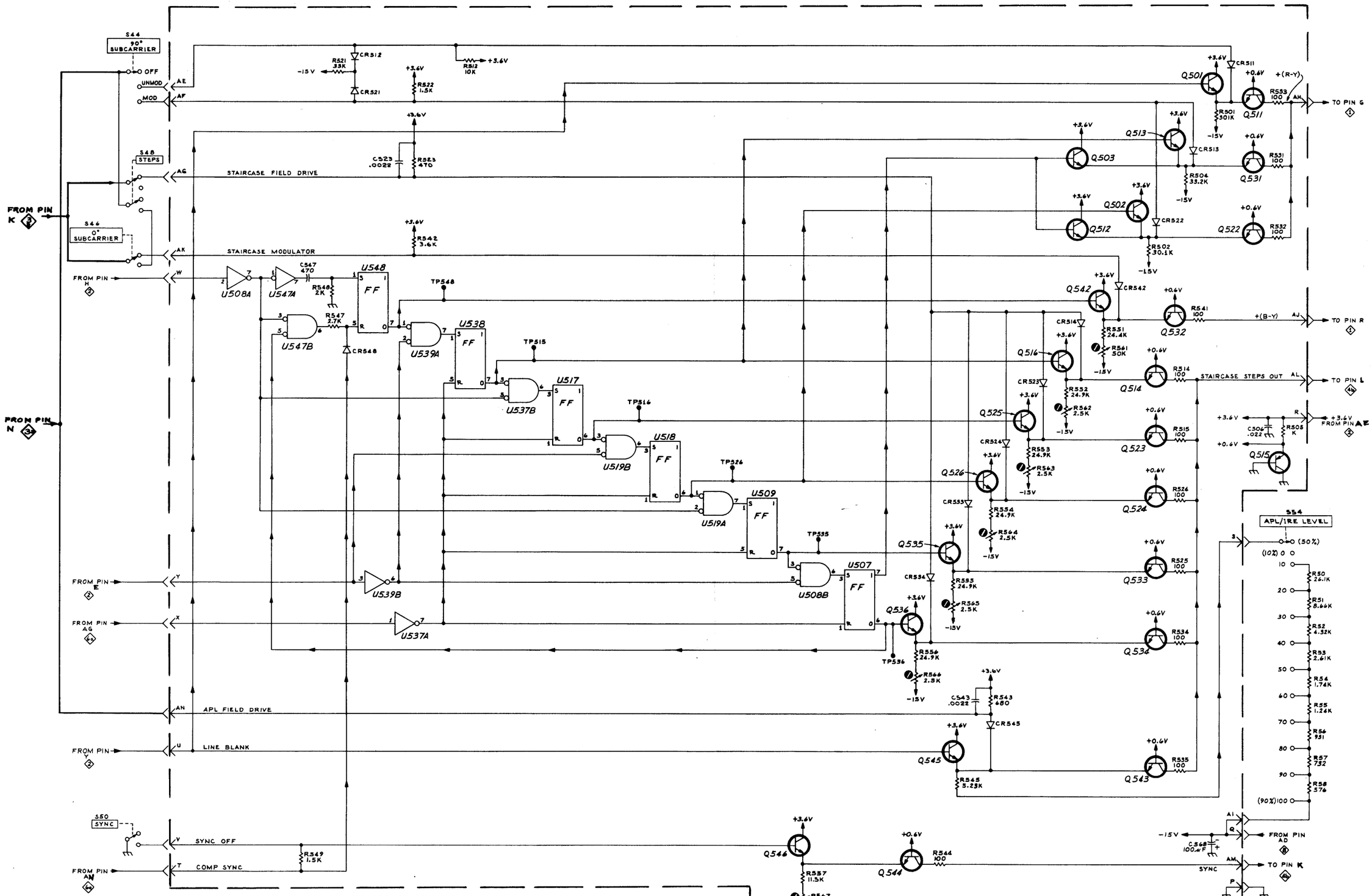

REFERENCE DIAGRAMS

- 1 MODULATOR
- 2 BAR TIMING
- 3 FIELD TIMING
- 4 VIDEO OUT
- 5 LINE TIMING
- 6 POWER SUPPLY

NOTES
1. SEE PARTS LIST FOR SEMICONDUCTOR & IC TYPES.
2. ALL UNUSED IC INPUT PINS ARE GROUNDED.
3. ALL IC; CONNECT PIN 8 TO +3.6V & PIN 4 TO GROUND.

144/R144

STAIRCASE 5 WLB 1070

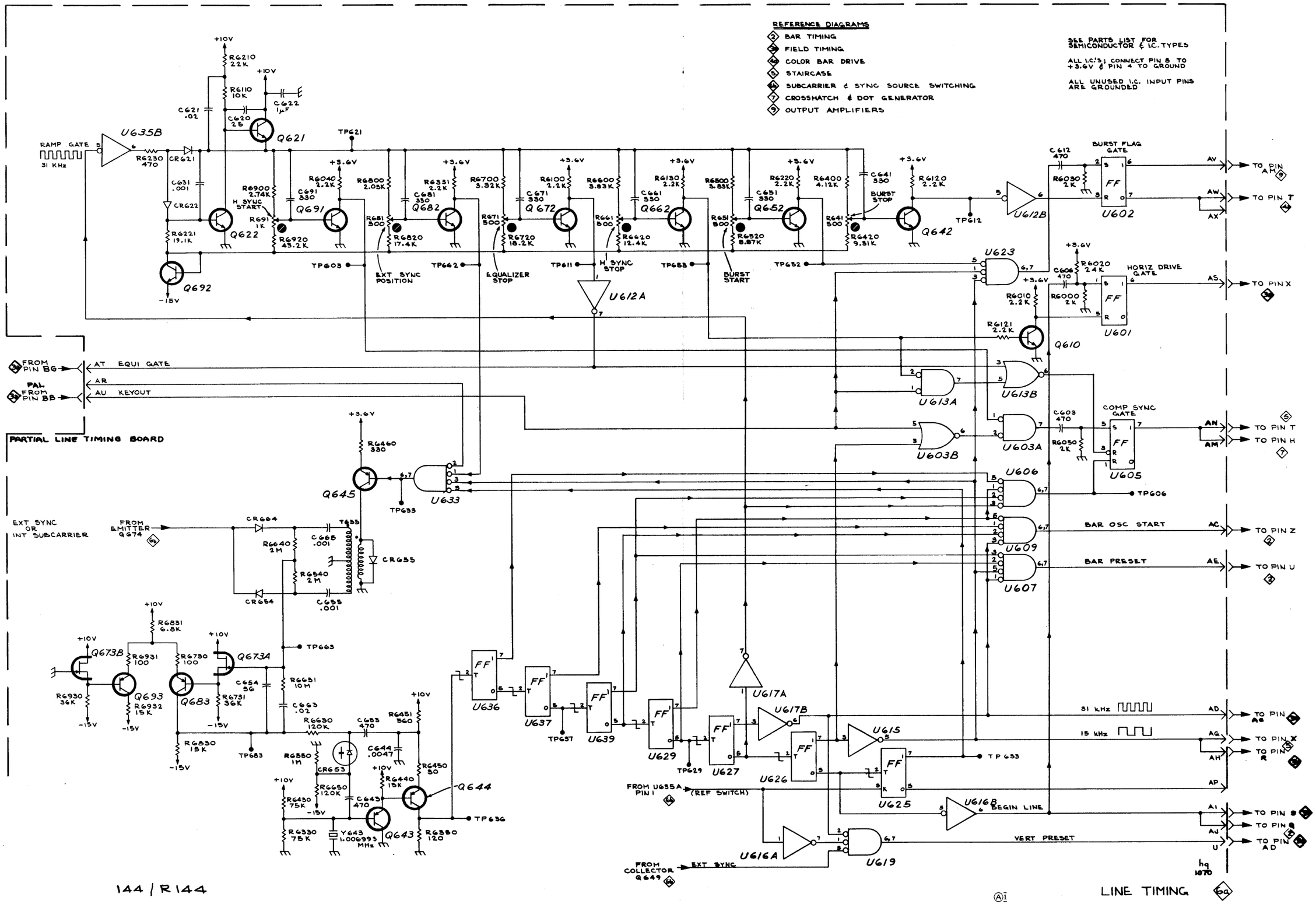

144 / R144

LINE TIMING 6a

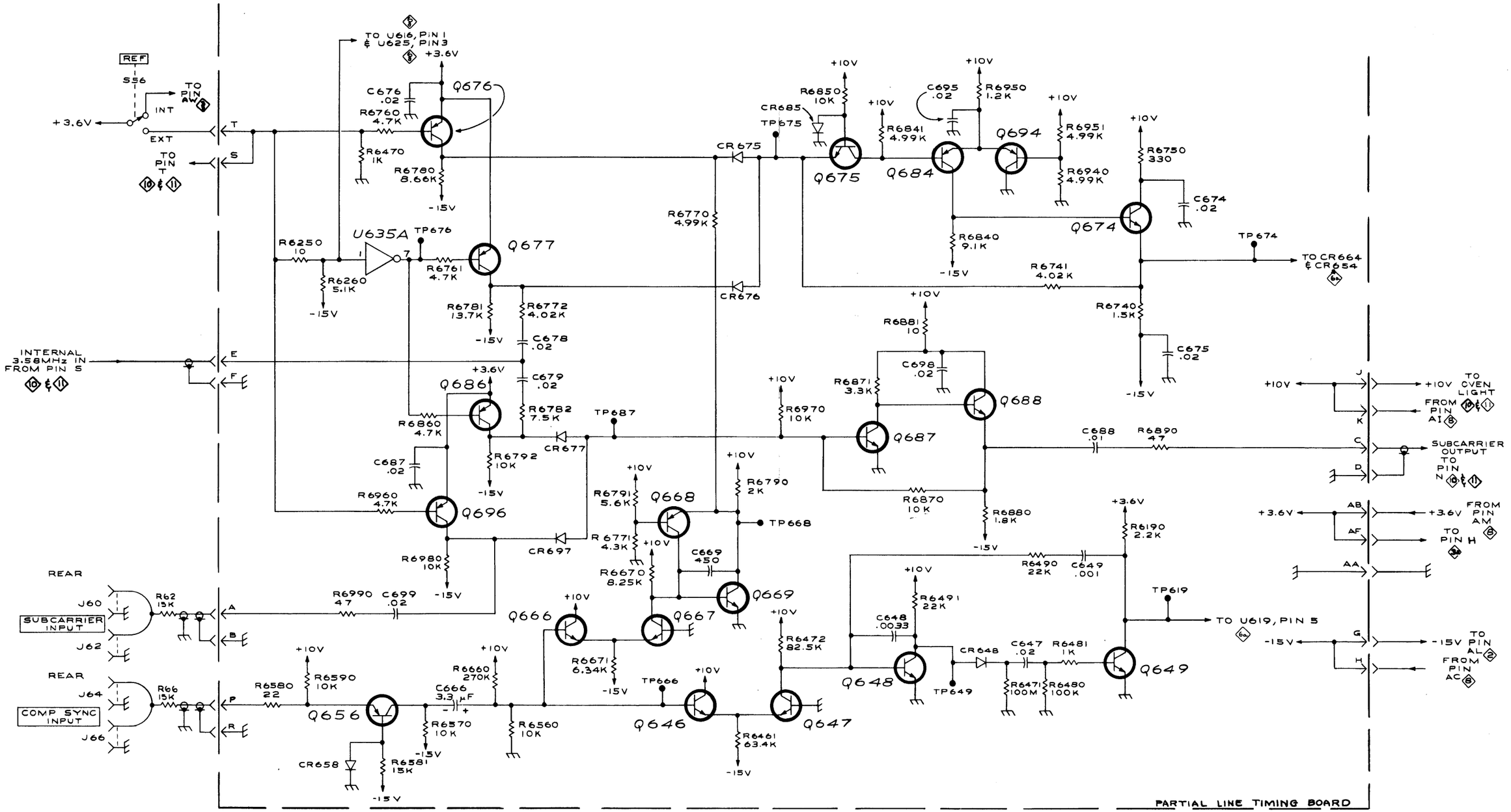

REFERENCE DIAGRAMS

- 2 BAR TIMING
- 3 FIELD TIMING
- 6a LINE TIMING
- 8 POWER SUPPLY
- 10 & 11 SUBCARRIER OSCILLATOR & OUTPUT

NOTES:

1. SEE PARTS LIST FOR SEMICONDUCTOR & I.C. TYPES
2. ALL UNUSED I.C. INPUT PINS ARE GROUNDED

SUBCARRIER & SYNC SOURCE SWITCHING 6b

VRS 1070

144/R144

Ai

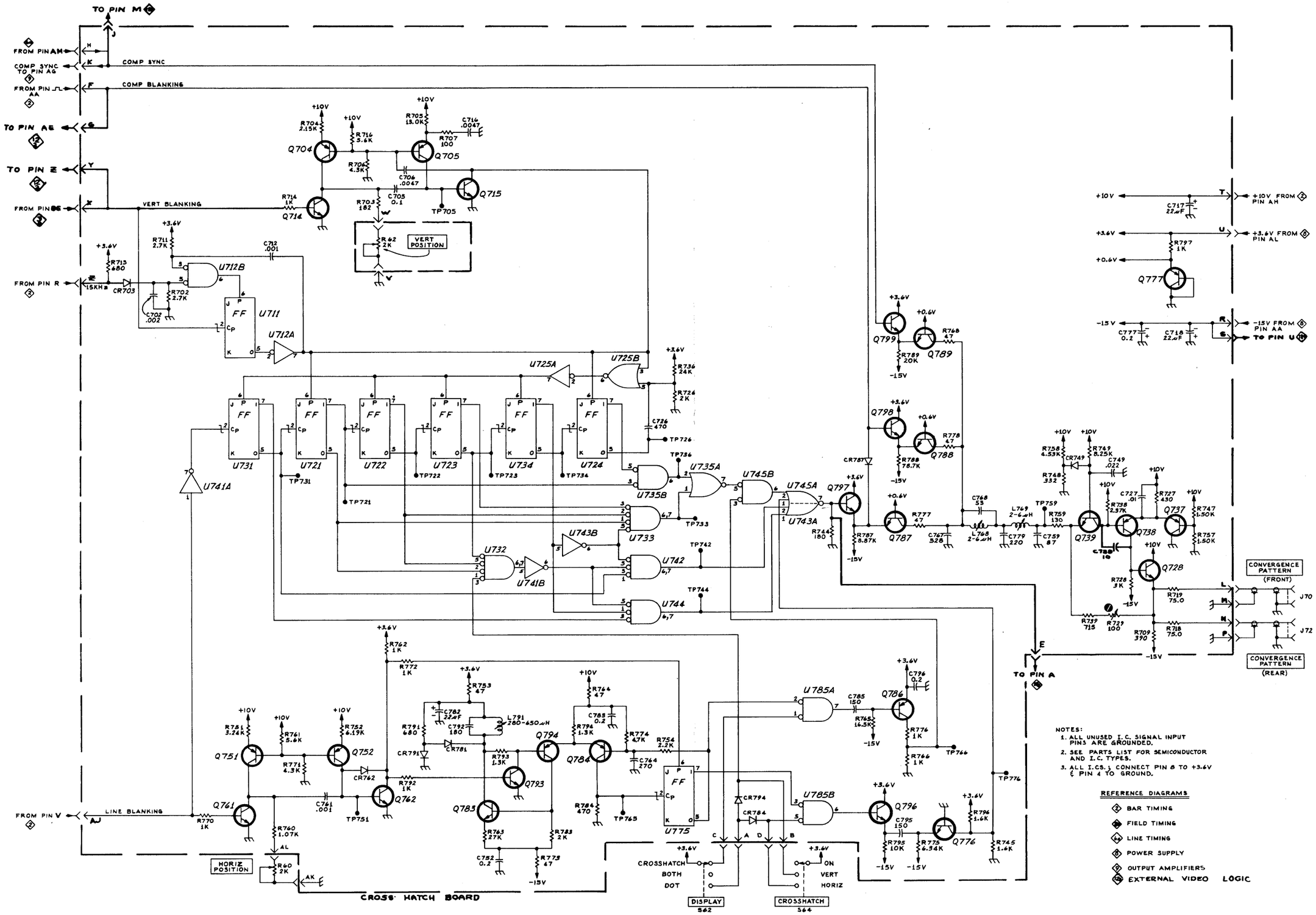

Ⓐ1
CROSSHATCH & DOT GENERATOR 7 WLB 1070

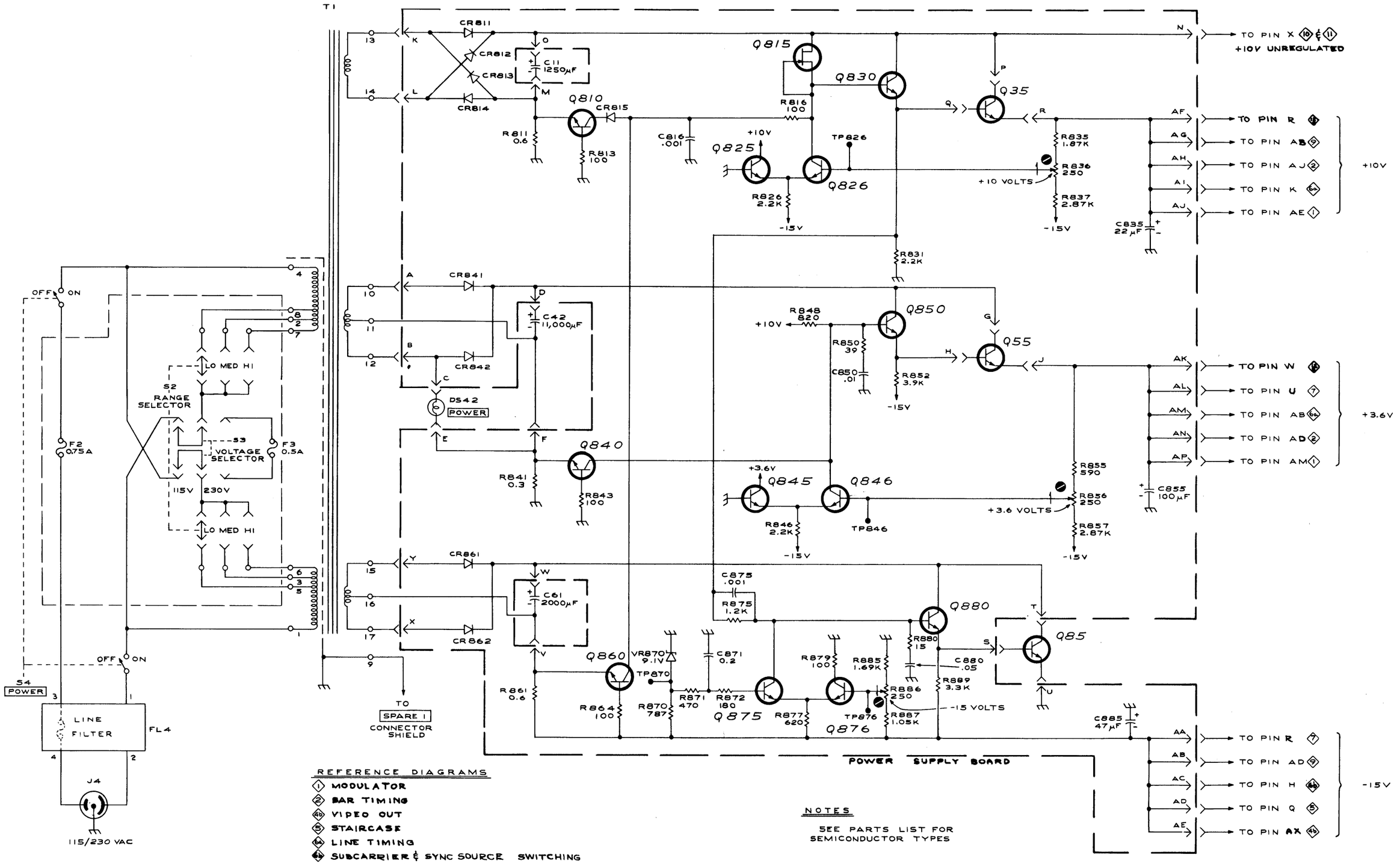

REFERENCE DIAGRAMS

- (1) MODULATOR
- (2) BAR TIMING
- (4a) VIDEO OUT
- (5) STAIRCASE
- (6a) LINE TIMING
- (6b) SUBCARRIER & SYNC SOURCE SWITCHING
- (7) CROSSHATCH & DOT GENERATOR
- (9) OUTPUT AMPLIFIERS
- (10) & (11) SUBCARRIER OSCILLATOR

NOTES

SEE PARTS LIST FOR SEMICONDUCTOR TYPES

VRS 1070

Ai

POWER SUPPLY (8)

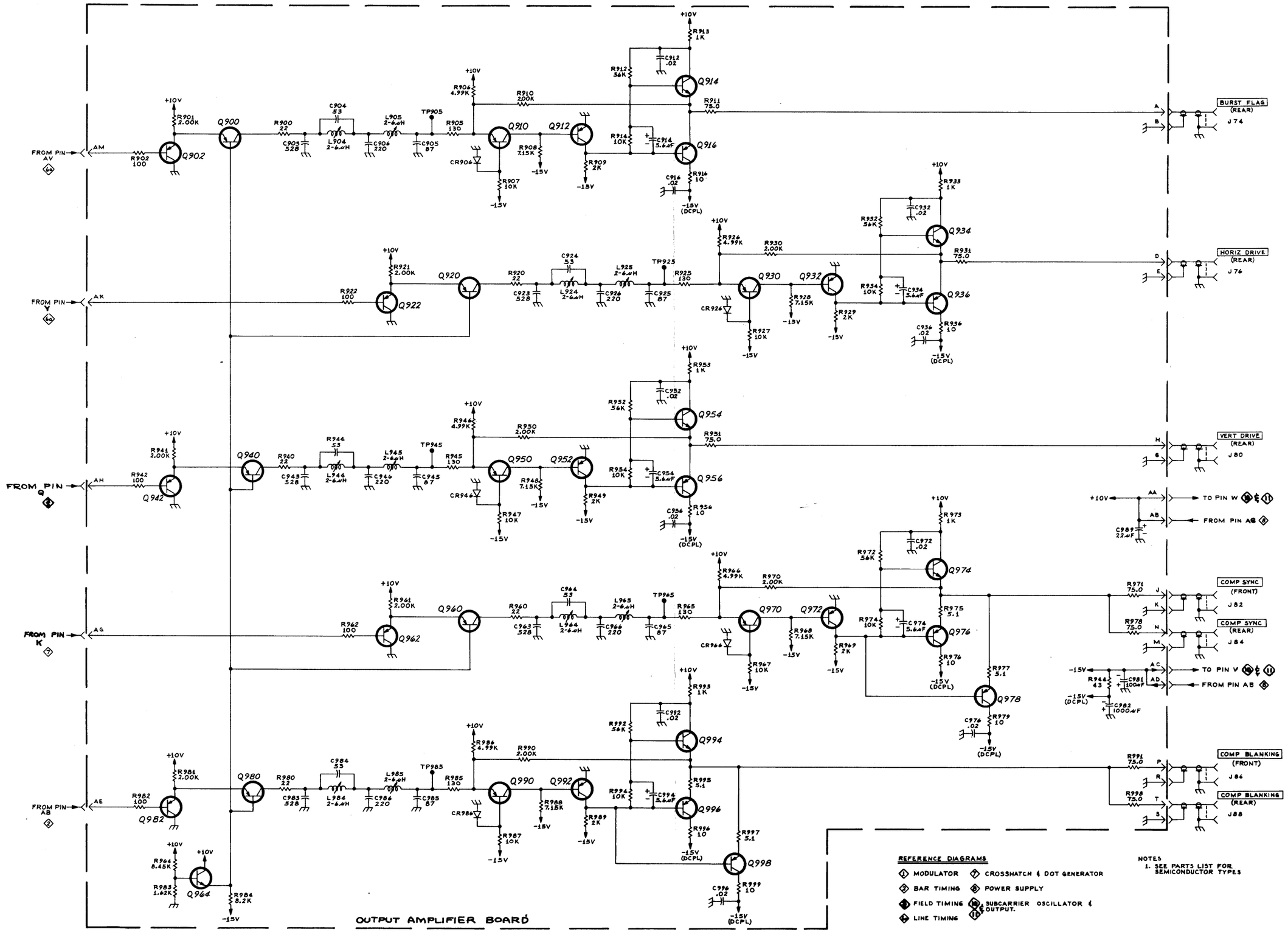
FROM PIN AV
FROM PIN
FROM PIN Q
FROM PIN K
FROM PIN AB
BURST FLAG (REAR) J74
HORIZ DRIVE (REAR) J76
VERT DRIVE (REAR) J80
TO PIN W
FROM PIN AG
COMP SYNC (FRONT) J82
COMP SYNC (REAR) J84
TO PIN V
FROM PIN AB
COMP BLANKING (FRONT) J86
COMP BLANKING (REAR) J88
OUTPUT AMPLIFIER BOARD
REFERENCE DIAGRAMS
MODULATOR
BAR TIMING
FIELD TIMING
LINE TIMING
CROSSHATCH & DOT GENERATOR
POWER SUPPLY
SUBCARRIER OSCILLATOR & OUTPUT.
NOTES
1. SEE PARTS LIST FOR SEMICONDUCTOR TYPES
OUTPUT AMPLIFIERS 9 WLB 1070

144/R144

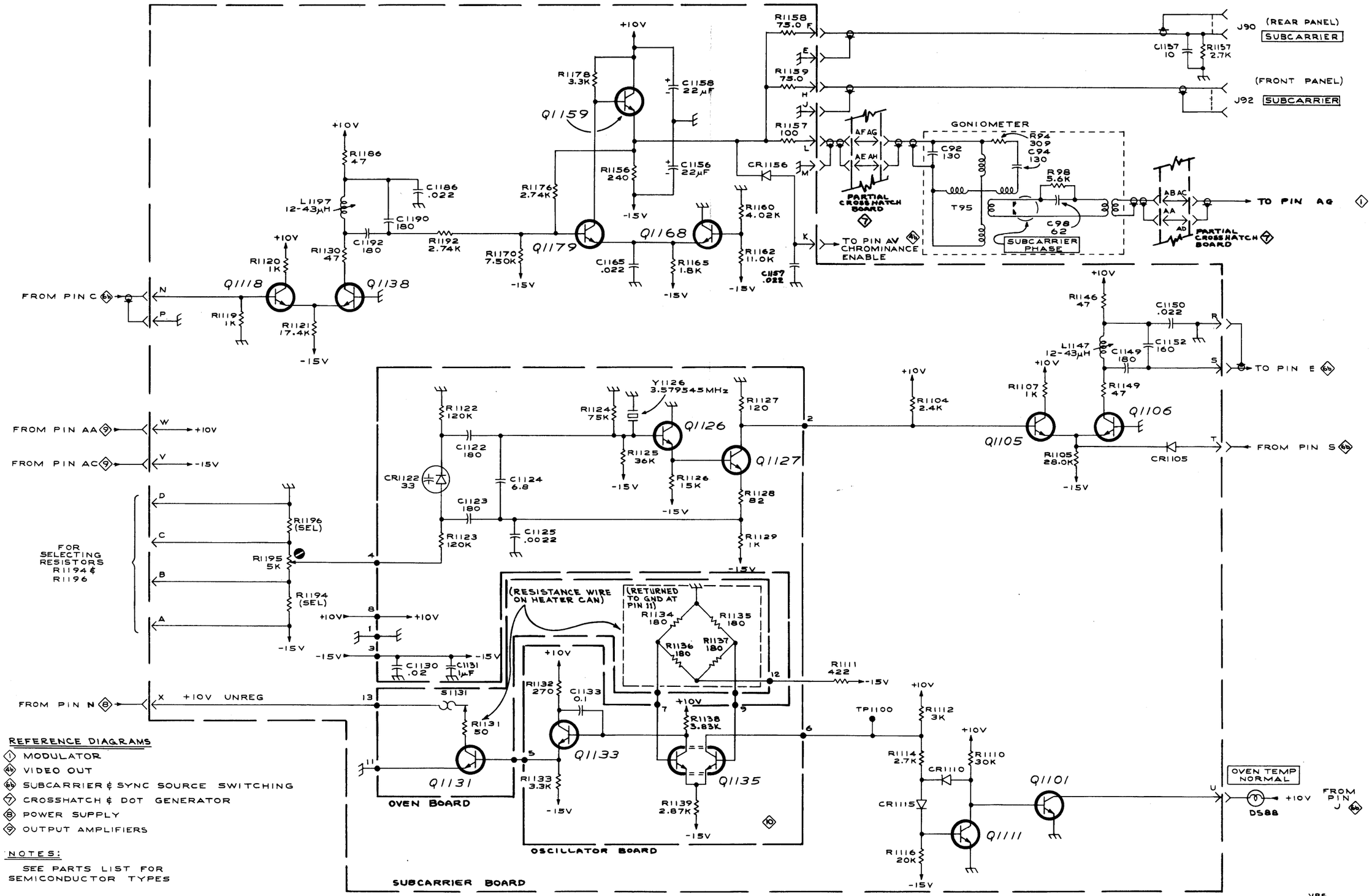

REFERENCE DIAGRAMS

- (1) MODULATOR
- (4b) VIDEO OUT
- (6b) SUBCARRIER & SYNC SOURCE SWITCHING
- (7) CROSSHATCH & DOT GENERATOR
- (8) POWER SUPPLY
- (9) OUTPUT AMPLIFIERS

NOTES:

SEE PARTS LIST FOR SEMICONDUCTOR TYPES

144/R144

(A)I

SUBCARRIER OSCILLATOR & OUTPUT (10) & (11)

VRS 1070

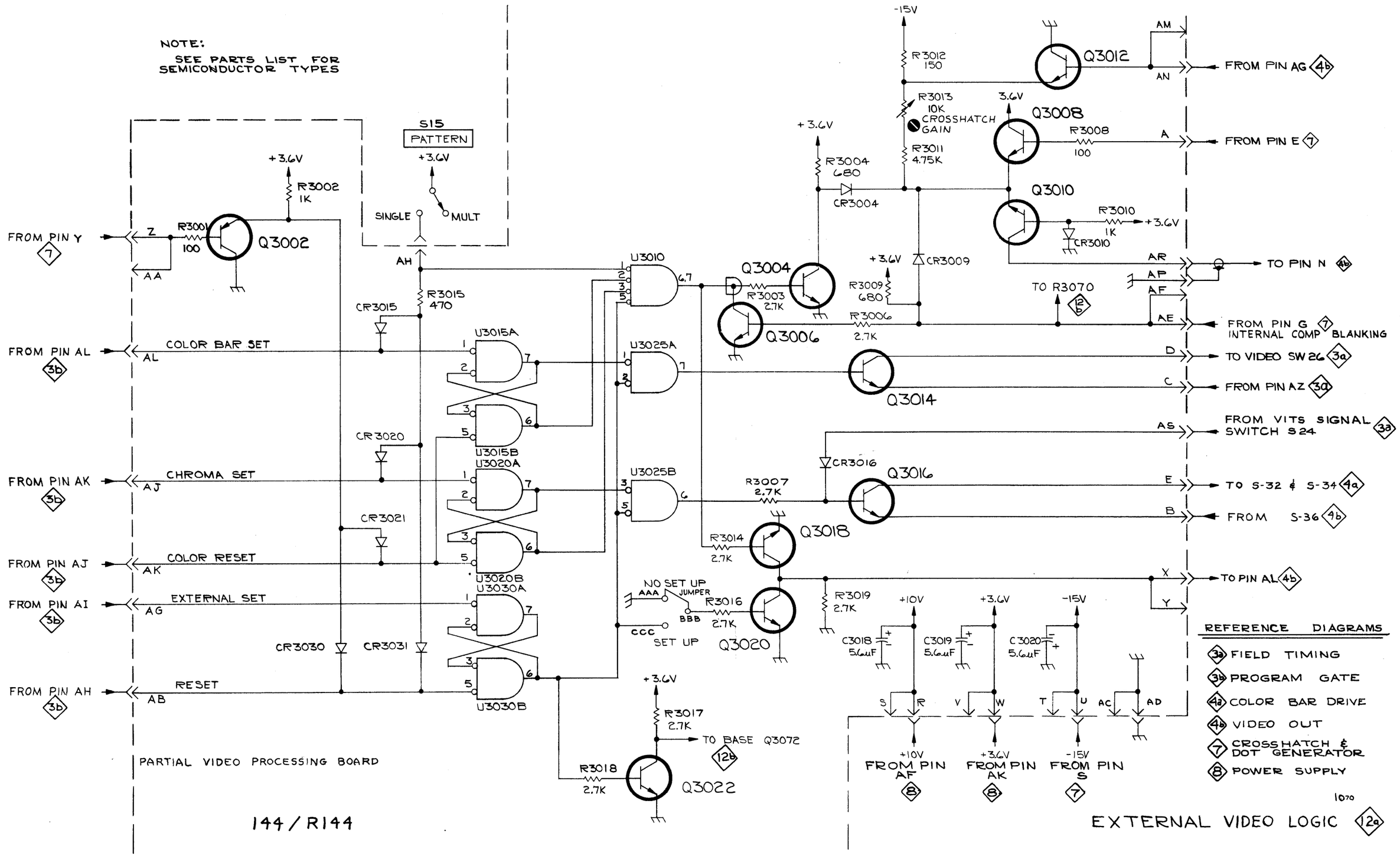
NOTE:
SEE PARTS LIST FOR SEMICONDUCTOR TYPES
S15
PATTERN
+3.6V
SINGLE
MULT
FROM PIN Y 7
Z
AA
R3001 100
Q3002
R3002 1K
AH
R3015 470
CR3015
CR3020
CR3021
CR3030
CR3031
FROM PIN AL 3b
COLOR BAR SET
AL
FROM PIN AK 3b
CHROMA SET
AJ
FROM PIN AJ 3b
COLOR RESET
AK
FROM PIN AI 3b
EXTERNAL SET
AG
FROM PIN AH 3b
RESET
AB
U3015A
U3015B
U3020A
U3020B
U3030A
U3030B
U3010
U3025A
U3025B
NO SET UP
JUMPER
AAA
BBB
CCC
SET UP
R3016 2.7K
Q3020
R3017 2.7K
TO BASE Q3072 12b
R3018 2.7K
Q3022
PARTIAL VIDEO PROCESSING BOARD
144 / R144
-15V
R3012 150
R3013 10K CROSSHATCH GAIN
R3011 4.75K
R3004 680
CR3004
Q3004
R3003 2.7K
Q3006
R3006 2.7K
R3009 680
CR3009
TO R3070 12b
R3007 2.7K
CR3016
Q3016
Q3018
R3014 2.7K
R3019 2.7K
Q3012
Q3008
R3008 100
Q3010
R3010 1K
CR3010
AM
AN
A
AR
AP
AF
AE
D
C
AS
E
B
X
Y
FROM PIN AG 4b
FROM PIN E 7
TO PIN N 4b
FROM PIN G 7 INTERNAL COMP BLANKING
TO VIDEO SW 26 3a
FROM PIN AZ 3a
FROM VITS SIGNAL SWITCH S24 3a
TO S-32 & S-34 4a
FROM S-36 4b
TO PIN AL 4b
+10V
C3018 5.6uF
C3019 5.6uF
C3020 5.6uF
S
R
V
W
T
U
AC
AD
FROM PIN AF 8
FROM PIN AK 8
FROM PIN S 7
REFERENCE DIAGRAMS
3a FIELD TIMING
3b PROGRAM GATE
4a COLOR BAR DRIVE
4b VIDEO OUT
7 CROSSHATCH & DOT GENERATOR
8 POWER SUPPLY
1070
EXTERNAL VIDEO LOGIC 12a

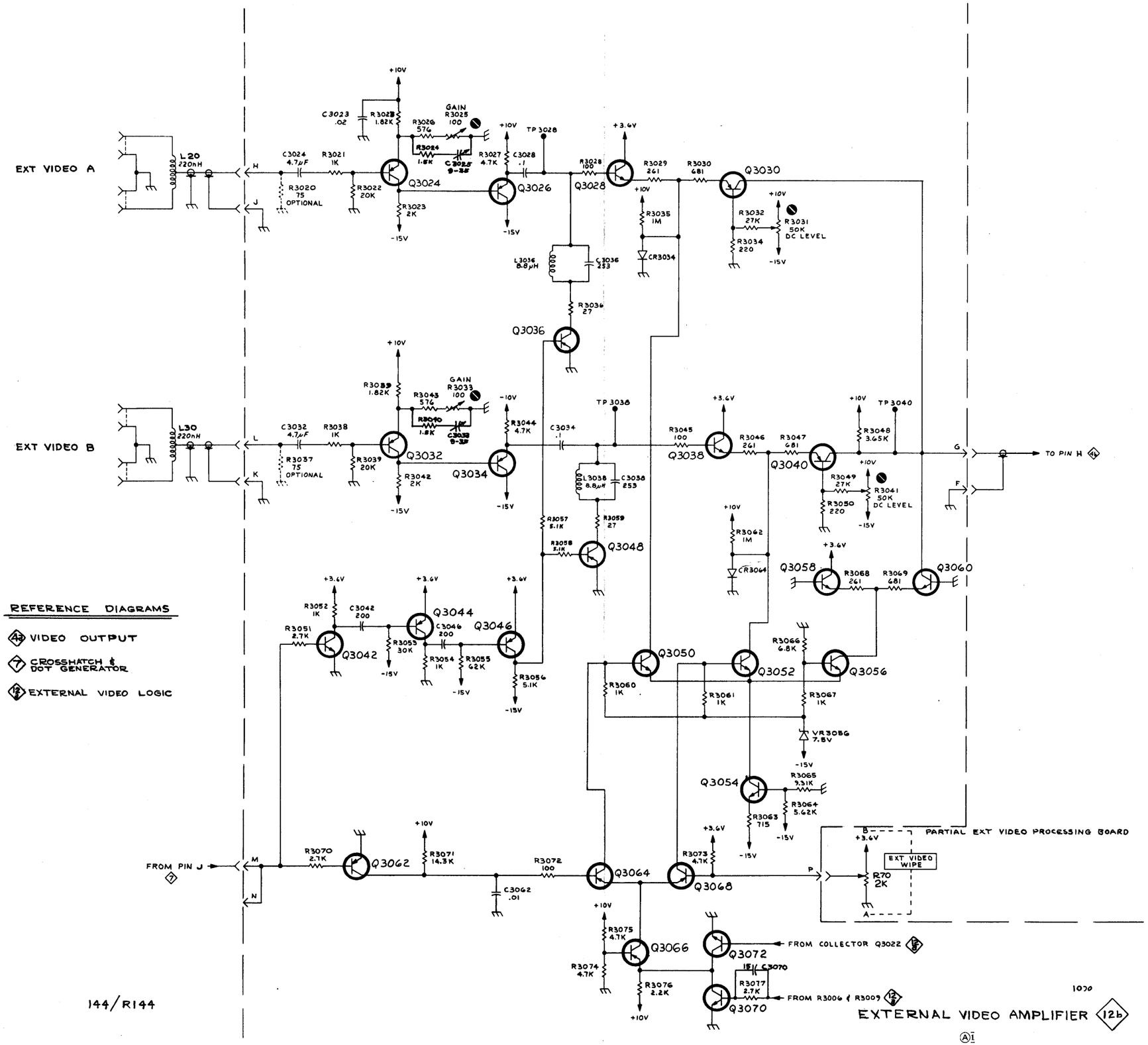

REFERENCE DIAGRAMS

- 4 VIDEO OUTPUT
- 7 CROSSHATCH & DOT GENERATOR
- 12 EXTERNAL VIDEO LOGIC

144/R144

1070

EXTERNAL VIDEO AMPLIFIER 12b

Ⓐ1

SUPPLEMENT CORRECTION

Page 6 2nd column, 3rd paragraph, line 11

CHANGE: R3070 to read R3071.

Page 11 3. Procedure

CHANGE: as follows:

k. CHECK--75% white pulses should superimpose on each other; color bars should superimpose on each other.

l. ADJUST--R3033 to superimpose the 75% white pulses, and C3033 to superimpose the color bars; repeat part k.

n. Repeat parts k and l, except adjust R3025 and C3025.

Page 15 Electrical Parts List

BAR DRIVE/VIDEO OUT Circuit Board Assembly

CHANGE TO:

C477	283-0185-00	2.5 pF	Cer	50 V	±5%
R500	315-0910-00	91 Ω	1/4 W		5%

SCHEMATIC CORRECTIONS

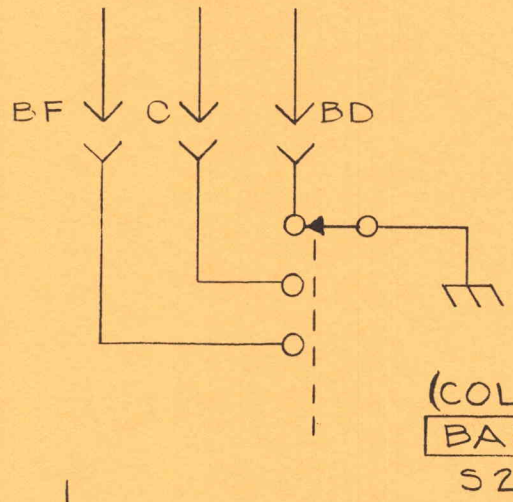

PARTIAL-
FIELD TIMING 3a

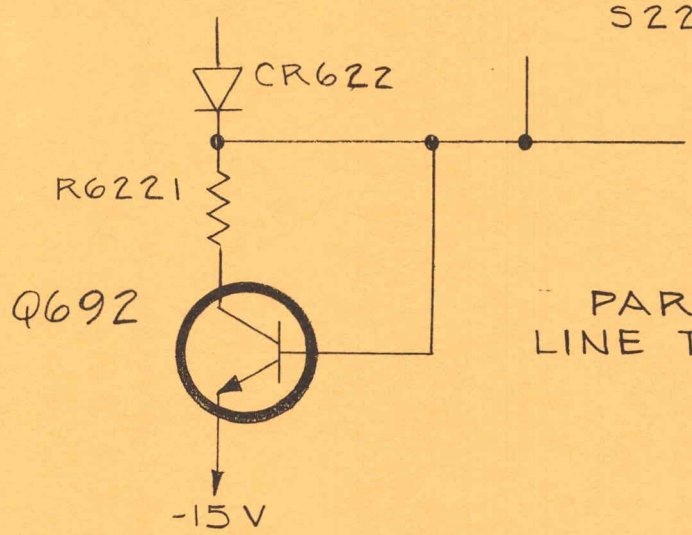

PARTIAL-
LINE TIMING 6a

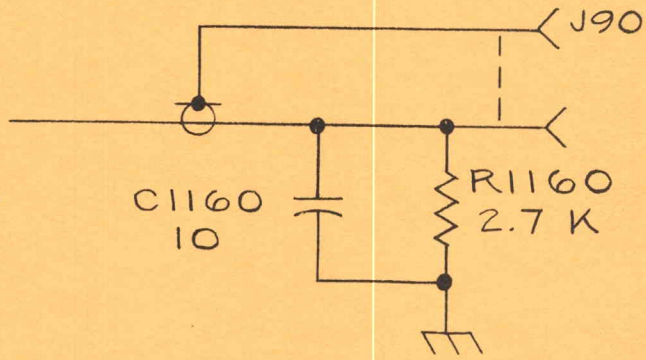

PARTIAL-
SUBCARRIER OSCILLATOR
& OUTPUT 10 & 11

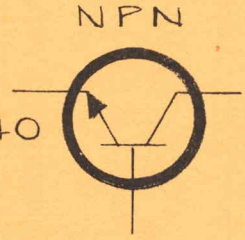

Q3030, Q3040
AND Q3062

PARTIAL-
EXTERNAL VIDEO
AMPLIFIER 12b

TYPE 144/R144 TENT SN B050000-up

ELECTRICAL PARTS LIST CORRECTION

BAR DRIVE & VIDEO OUT Circuit Board Assembly

CHANGE TO:

Q491	151-0207-00	Silicon	2N3415

M17,113/1170

ELECTRICAL PARTS LIST AND SCHEMATIC CORRECTIONS

CROSS HATCH Circuit Board Assembly

CHANGE TO:

R787	321-0295-00	11.5 kΩ	1/8 W	MF	1%
R788	321-0388-00	107 kΩ	1/8 W	MF	1%

ELECTRICAL PARTS LIST AND SCHEMATIC CORRECTIONS

POWER SUPPLY Circuit Board Assembly

CHANGE TO:

670-0324-01 Complete Board

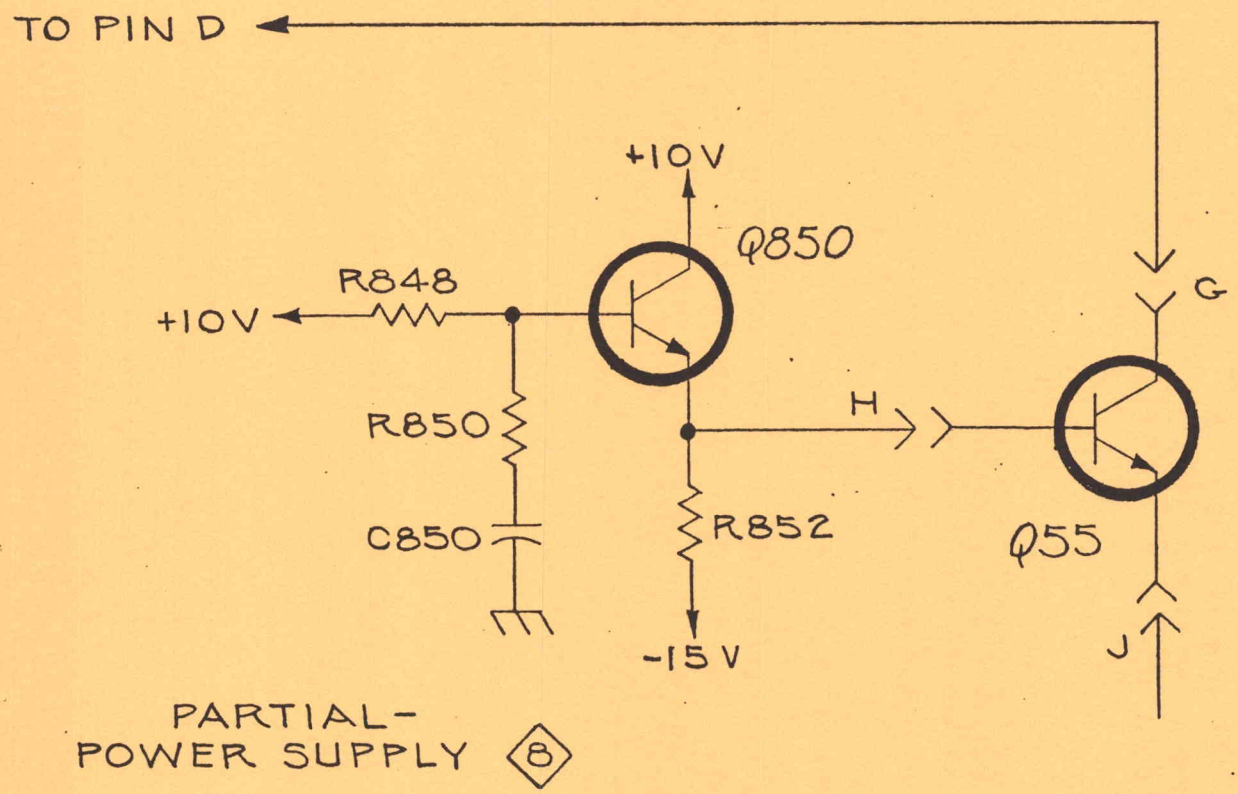

ELECTRICAL PARTS LIST CORRECTION

CHASSIS

CHANGE TO:

FL4	119-0095-06	2 x 1 A, 250 VAC, 400 Hz

ELECTRICAL PARTS LIST AND SCHEMATIC CORRECTION

FIELD TIMING Circuit Board Assembly

CHANGE TO:

C388	283-0032-00	470 pF	Cer	500 V	5%

PARTIAL-
FIELD TIMING
3