Tektronix®
COMMITTED TO EXCELLENCE

COMBINATION EDITION

# Wizards Workshop

**********
ALL SERVICE QUESTIONS FROM EUROPE, MIDDLE EAST, AND AFRICA SHOULD BE ADDRESSED TO THE EUROPEAN MARKETING CENTER SERVICE GROUP IN THE NETHERLANDS.
**********

TEKTRONIX INTERNAL USE ONLY

Published by Service Admin Support
56-037 Ext. 8939 Merlo

April 10, 1981
Issue 11-6

## TABLE OF CONTENTS

YOU DONE GOOD . . . . . 1

PERSONNEL CHANGES . . . . . 2

GENERAL

BEAVERTON SERVICE SUPPORT GROUP - NEW PHONE EXTENSIONS-Ref. Pull-Out . . . . . A-1

FAILURE CODES - ALPHABETICAL LISTING . . . . . 6

MASS STORAGE CONCEPTS FLEXIBLE DISK - PART 2 . . . . . 7

STOLEN INSTRUMENTS (INTERNATIONAL) . . . . . 9

TROUBLESHOOTING SYMPTOM GUIDES AVAILABLE FOR EUROPE . . . . . 9

ADMINISTRATIVE SUPPORT

SERVICE RECORD PROCESSING - MODULE EXCHANGE COPY . . . . . 10

LABORATORY INSTRUMENT DIVISION

SAMPLING

1502 U1575 SOLDERED TO CIRCUIT BOARD . . . . . 11

TM500

PG501 OSCILLATION WHEN SWITCHING RANGES . . . . . 11

TABLE OF CONTENTS (CONTINUED)

## COMMUNICATIONS DIVISION

### SPECTRUM ANALYZERS

492/P MICROPROCESSOR SELF TEST LOOP ERROR - (A58CR2025) . . . . . 13

### TELEVISION PRODUCTS

140 SERIES RTL LOGIC DEVICES . . . . . 14

520 TRACE ABERRATIONS . . . . . 15

529 FIELD CASE . . . . . 15

650 SERIES CRT VENDOR I.D. NUMBERS . . . . . 16

650 SERIES RED CLAMP OSCILLATIONS . . . . . 16

1440 MODIFIED PRODUCTS PARTS LOCATIONS . . . . . 18

1480 SERIES POOR FOCUS IN LINE SELECT MODE . . . . . 18

1900 FCC COLOR BAR VIT CHROMINANCE . . . . . 18

1900 RACK LATCH COLORS . . . . . 18

## SERVICE INSTRUMENT DIVISION

### LOGIC ANALYZERS

308 PART NUMBER CORRECTION . . . . . 19

### PORTABLES

468 SERVICE UPDATE PLAN #3002 . . . . . 19

## INFORMATION DISPLAY DIVISION

618 OPT 30 CABLE (012-0824-00) . . . . . 20

4081 MANUAL PART NUMBERS - Ref. Pull-Out . . . . . B-1

463X CUTTER CLUTCH CHATTER . . . . . 21

4642 JUMPER CONFIGURATIONS . . . . . 22

4663 PEN CARRIAGE HEIGHT GAUGE . . . . . 26

4663 PLATEN CLEANING PROCEDURE, REV. . . . . 27

4663 ROM OVERLAY, EXCHANGE PROCEDURES . . . . . 28

TABLE OF CONTENTS (CONTINUED)

## LABORATORY INSTRUMENT DIVISION

### MICROCOMPUTER DEVELOPMENT PRODUCTS (MDP)

F8 EMULATOR MEMORY MAPPING CAPABILITIES . . . . . 29

### SEMICONDUCTOR TEST SYSTEMS

S-3200 MANUALS . . . . . 30

### REFERENCE PULL- OUT

## GENERAL

BEAVERTON SERVICE SUPPORT GROUP - NEW PHONE EXTENSIONS . . . . . A-1

## INFORMATION DISPLAY DIVISION

4081 MANUAL PART NUMBERS . . . . . B-1

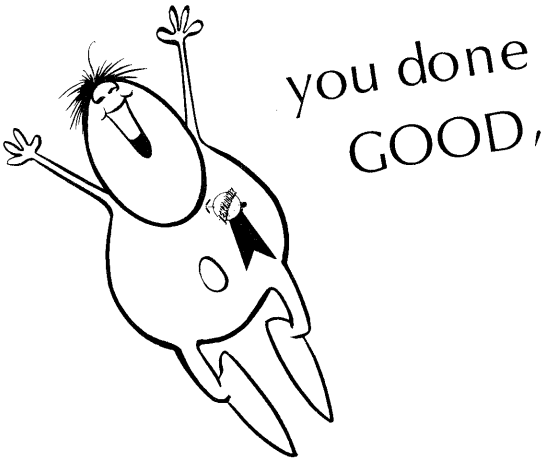


"YOU DONE GOOD" AWARDS

GO TO THE FOLLOWING . . .

AL THOMPSON - Denver

Al recently graduated from Colorado Technical College and was awarded a B.S. in Electronic Engineering Technology. Al, a Systems Technician, can be justifiably proud of this accomplishment.

Congratulations Al!

******

VIC WILLIAMS & PAUL SCHWANEMANN - Los Angeles

After the 1981 National Automobile Dealers Association Convention one division of a major auto company wrote the following:

"Vic Williams and Paul Schwanemann provided excellent support and went out of their way to be helpful. Their assistance in the checkout, week-end coverage and even the transportation of the terminals and copiers, was greatly appreciated, expecially since some of the arrangements were made at the last minute.

Our exhibits success can be attributed in part to Vic and Paul, and Tektronix as well."

Our thanks to Vic and Paul for a job well done!

******

GARY BEAM - Santa Clara

The following was extracted from an IOC expressing appreciation for a "Job Well Done". It was signed by several managers and forwarded to us from Lynn Sperley in Service Support.

"Our appreciation of your suggestion to use a cable tie to hold the problem plug in place on the 7704A can best be expressed by telling you that all 7704A's shipped from manufacturing after 1-20-81 will have a cable tie on P20G! The modification to use a latching connector is in process and will be in the 7704A as soon as the evaluation is complete and the material is available. Until then, your suggestion will prevent customer dissatisfaction with the DOA's that were happening when P20G fell off in shipment. I will also provide a means of correcting the problem in existing instruments.

Your use of the Service Action Request and the photography you included is an ideal example of the type of thing best handled by the SAR."

Thanks Gary and keep up the good work!

--Editor

## PERSONNEL CHANGES

### NEW HIRES

*BUERL HEFT - Orlando*

Buerl joins Tek as an ET II after twenty years Navy experience, including PME; and three years civilian experience, the latest with Leasametric as a Cal Lab Manager.

*BILL DYSON - Orlando*

Bill has just completed a twenty year career in the Air Force, the last thirteen as a PME technician and Supervisor. Bill joins Tek as an ET II.

*ANDY MOUNTZ - Dallas*

Andy joins Tek as an ET II on day shift. His previous experience includes working as an E-5 Prevision Measurement Lab Technician.

*LARRY BREWSTER - Dallas*

Larry comes to Tek from Control Data where he spent two and a half years working on IBM 360's and 370's as well as the Atari 400 and 800 home computers. He will be an ET I in Dallas.

*LARRY FULSON - Chicago*

Larry joined Tek in February as a Field Service Specialist I in IDD Field Service. He recently graduated from DeVry Technical Institute with an Electronic Technician Diploma. He has also had some field service experience with IBM and Livingston Communications.

*PAUL E. COOPER - Santa Clara*

Paul is a graduate of Suburban Technical School, Rochester, New York and brings to his new ET I position a high level of technical skill and enthusiasm.

*MELVIN TERRY - Houston*

Melvin comes to Tek from the U.S. Army, where he has completed seven years of service as an electronic technician. He will perform the duties of a Field Service Specialist I in Houston.

*TYLL HERTSENS - Los Angeles*

Tyll comes to Tek with three years experience as an audio and video technician. Prior to that, he served four years in the U.S. Coast Guard as a Gun Fire Control Technician.

*A HEARTY WELCOME TO ALL OF THE ABOVE.*

MORE PERSONNEL CHANGES . . .

PROMOTIONS

*LARRY WILLIAMS - Dayton*

Larry has accepted the position of Inventory Support Supervisor for the Dayton service area. He has been a Field Clerk in Orlando for just over two years.

*TOM McClain - Denver*

Tom has been promoted to Field Service Specialist III after three years with Tek in IDD and MDL.

*KATHRYN OTT - Denver*

Kathy has been promoted from a JET to a FSS I. She accomplished her training in minimum time due to her own initiative and drive.

*RICK STODDARD - Factory Service*

Rick has been promoted from FET I to FET II on T&M swing shift.

*HOWARD CHRISTELLER - Rockville*

Howard has been promoted to FSS II after being with Tek a little over two years.

*ROGER CHIDESTER - Rockville*

Roger has been promoted to FSS III after being with Tek for almost four years.

*ED VAN SCOTEN - Denver*

Ed has recently transferred to Denver from Salt Lake City and been promoted to Service Center Supervisor II.

*BOB BARTON - Salt Lake City*

Bob was transferred to Salt Lake City to run the combined FS and T&M operation. He was promoted from Field Service Specialist II to Service Center Supervisor I.

*DAVE WEBBER - Phoenix*

Dave has been the supervisor responsible for T&M, IDD and Systems. He has now been promoted from Service Center Supervisor I to Field Service Supervisor.

*DANNY BROWER - Denver*

Danny, formerly an Electronics Technician II, has been promoted to Logistics Support Supervisor.

*CONGRATULATIONS AND WE WISH ALL OF YOU CONTINUED SUCCESS IN YOUR NEW POSITIONS.*

---

MORE PERSONNEL CHANGES . . .

NEW HIRES

*MITCHEL MAALIS - Los Angeles Field Service*

Mitch has joined Tek with approximately four years experience on mini and micro-computers. The majority of this time was spent in Field Service.

*MARVIN TUCKER - Los Angeles Field Service*

Marvin comes to Tek after completing training at Control Data Institute.

*ALLISON GENTILE - Los Angeles T&M*

Allison is the most recent addition to the LA T&M staff. She has completed two years at the University of New Mexico and has recently graduated from the Albuquerque Technical - Vocational Institute. Allison received several awards while attending these schools, including a Presidential Scholarship.

*PETER FURNISH - TEK Australia (Perth Service Centre)*

Peter has begun his career with TAPL as a customer engineer.

*BRUCE JACKSON - Sydney Australia Service Centre*

Bruce has begin an electronics traineeship in the Sydney Centre. He replaces Peter Knapman who has gained promotion to Service Technician.

*WELCOME AND BEST WISHES TO ALL OF THE ABOVE.*

TRANSFERS

*DAVE ANDERSON - Denver*

Dave is the new Shipping and Receiving Clerk. He recently transferred from Beaverton where he worked as an Engineering Stock Clerk for five years. Dave is married with two children and considers himself an outdoors man; enjoying camping, hunting, fishing and water skiing.

*RAYMOND KELLY - Los Angeles*

Ray, who previously held an Electronic Technician position in T&M, has elected to pursue a career as a Field Service Specialist. He did an outstanding job with T&M and has brought the same qualities to Field Service.

*CONGRATULATIONS AND CONTINUED SUCCESS IN YOUR NEW POSITIONS*

MORE PERSONNEL CHANGES . . .

PROMOTIONS

*HANK MOORE - Long Island*

Hank has been promoted to Field Service Supervisor after holding both Electronic Technician I and II positions since 1979. He holds a B.S. in Management with a minor in Finance.

*STEVE DIXON - Columbia, S.C.*

Steve has accepted the difficult responsibility of operating as a remote Field Service Specialist. He has met this challenge in an outstanding manner.

*PATRICK WHITE - Knoxville, TN.*

Pat has been promoted to Field Service Specialist II. His contribution to the success of Tek has been of significant value and this promotion is in recognition of his superior performance.

*JESSE LOOSE - Dayton*

Jesse has been promoted to Field Service Specialist III. He has been and an IDD specialist since 1976 and is eagerly assuming the addition responsibilities of his new position.

*BOB JONES - Rockville*

Bob came on board with Tek in March of 1977 as the Rockville Service Center's first Jr. Electronic Technician. Through continued initiative and self-development, Bob's contribution to the Service Organization has grown rapidly. He has now been promoted to ET II.

*CONGRATULATIONS AND WE WISH ALL OF YOU CONTINUED SUCCESS IN YOUR NEW POSITIONS.*

---

*NOTE FROM THE EDITIOR:*

*In the future Personnel changes will be printed every other issue.*

*--Sharon Huetson*
*Editor*

## FAILURE CODES - ALPHABETICAL LISTING

| DESCRIPTION | CODE # |
|---|---|
| ADJUSTMENTS | 01 |
| APPEARANCE UNACCEPT. TO CUST. | 13 |
| ARCING | 71 |
| BINDING | 36 |
| BNC CONNECTOR PROBLEMS | 45 |
| BROKEN | 95 |
| BURNED | 52 |
| CABLE NOT CONNECTED | 06 |
| CHECKOUT OF EQUIPMENT | 54 |
| CIRCUIT BOARD CONDUCTORS | 49 |
| CLEANING/LUBRICATION | 32 |
| CRACKED | 95 |
| CRT NECT PIN PROBLEMS | 19 |
| CUSTOMER CAUSED | 42 |
| DAMAGE, FACEPLATE | 90 |
| DAMAGE, PHYSICAL | 44 |
| DATA COMMUNICATIONS PROBLEMS | 40 |
| DOUBLE PEAKING | 82 |
| DRIFTING | 69 |
| ELECTRICAL CONNECTION | 27 |
| ELECTRONIC CLEARANCE | 16 |
| FACEPLATE DAMAGE | 90 |
| FILAMENT OPEN | 94 |
| FIRMWARE PROBLEMS | 57 |
| FOCUS | 92 |
| G-K SHORT | 81 |
| GASSY | 80 |
| GEOMETRY | 85 |
| HARD COPY NOISE | 99 |
| IMPROPER APPLICATION | 39 |
| IMPROPERLY INSTALLED PARTS | 08 |
| INSTALLATION | 54 |
| INSULATION PROBLEMS | 30 |
| INTERMITTENT | 63 |
| JITTER | 73 |
| LATCHUP | 58 |
| LEAD OUT OF SOCKET | 05 |
| LEAKAGE | 70 |
| LOOSE MATERIAL | 15 |
| LOOSE PARTS | 12 |
| LOW INTENSITY | 83 |
| LUBRICATION/CLEANING | 32 |

| DESCRIPTION | CODE # |
|---|---|
| MECHANICAL INCOMPATIBILITY | 02 |
| MECHANICAL ASSEMBLY PROBLEMS | 20 |
| MECHANICAL FAILURE | 28 |
| MEDIA DEFECTS | 47 |
| MESH DEFECTS | 84 |
| MISSING PART | 18 |
| NEVER SOLDERED/UNSOLDERED | 10 |
| NO APPROPRIATE CODE | 00 |
| NO PROBLEM FOUND | 60 |
| NOISY | 67 |
| NOT CONNECTED (CABLE) | 06 |
| OPEN | 61 |
| OPEN OR SHORT (UNKNOWN) | 78 |
| OSCILLATES | 72 |
| OUT OF TOLERANCE | 66 |
| PARTS IMPROPERLY INSTALLED | 08 |
| PHOSPHOR BURNED | 87 |
| PHYSICAL DAMAGE | 44 |
| PINCHED WIRES | 25 |
| PREVENTIVE MAINTENANCE | 51 |
| PROBLEM CLEARED ITSELF | 59 |
| REPLACED PER BEAV. INST. | 55 |
| SHIPPING DAMAGE | 41 |
| SHORT OR OPEN (UNKNOWN WHICH) | 78 |
| SHORTED | 62 |
| SOCKET PROBLEM | 04 |
| SOFTWARE PROBLEMS | 56 |
| SOLDER BRIDGE | 09 |
| SOLDER PROBLEM | 11 |
| SQUARE PIN CONNECTOR | 22 |
| STORAGE DEFECT | 91 |
| SWITCH CONTACT PROBLEM | 29 |
| TEMPERATURE SENSITIVE | 68 |
| UNACCEPTABLE DISPLAY | 26 |
| UNCONNECTED | 06 |
| UNKNOWN | 65 |
| UNSOLDERED, NEVER SOLDERED | 10 |
| WIRING ERROR | 14 |
| WORN-OUT PARTS | 43 |
| WRITING SPEED | 79 |
| WRONG PART | 17 |

Our thanks to Dick Browne in Phildelphia for bringing this need to our attention.

--Editor

(second article in a series of three)

## ENCODING INTRODUCTION

Flexible disk encoding may be accomplished in many different ways. Each scheme is typically application dependent. A system designer will be responsible for the actual encoding scheme for the disk data transfer for different disk drives. Some manufacturers give the designer a choice of schemes, but the application will still determine the encoding scheme to be used.

This article will dicuss two common encoding schemes:

1. Frequency Modulation (FM)
2. Modified Frequency Modulation (MFM)

With either FM or MFM a byte of data is converted into a serial data "stream". That "stream" is then divided into time increments called bit cells (see Figure 1). Each bit cell is then encoded as a "0" or "1". The key to ALL encoding schemes lies in the definition of what represents a "0" or "1" within the bit cell.

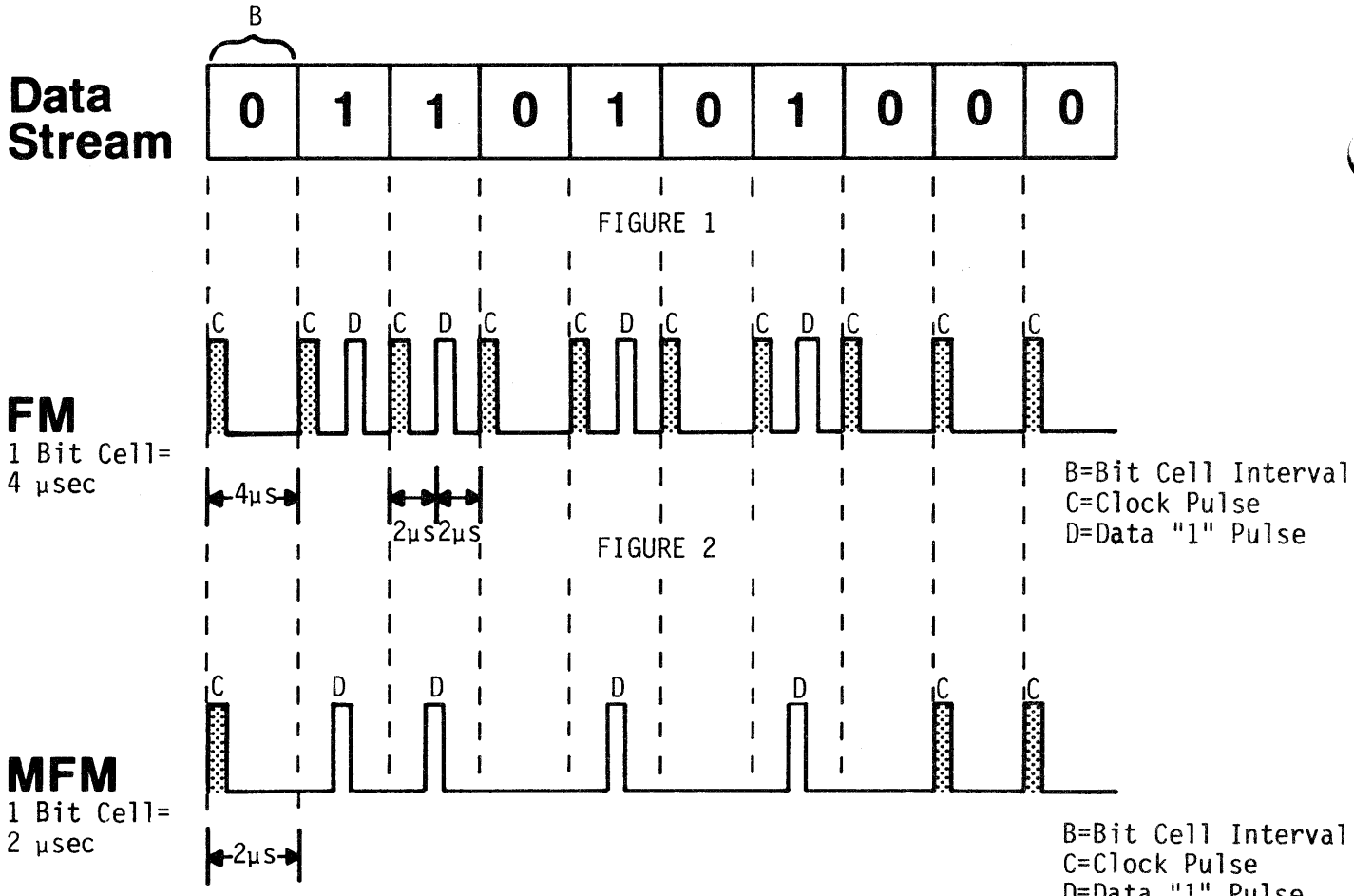


FIGURE 3

(Article continued on the following page)

## WHAT IS FM?

The coded information, or format, used with Frequency Modulation incorporates a clock pulse at the beginning of each bit cell (see Figure 2). If a data pulse is present at the center of the bit cell, that cell will represent a "1". If no data pulse is present between clock pulses, that bit cell will represent a "0". The clock pulses are required to maintain synchronization in the event of a long "stream" of "0" bit cells.

In FM the minimum time interval between any two pulses is 2 μsec, establishing a bit cell time interval of 4 μsec. This information will allow the calculation of the maximum data transfer rate for FM. 1 / bit cell interval (4 μsec) equals 250 kHz.

Notice in Frequency Modulation, more than one half of the information to be placed on the disk media is clock pulses, NOT useful data pulses. Therefore, FM encoding is only 50% efficient.

## WHAT IS MFM?

The coded format used with Modified Frequency Modulation combines both clock and data pulses into each bit cell (see Figure 3). If a data pulse is present at the center of a bit cell, that cell will represent a "1". If no data pulse is present within a bit cell, that cell will represent a "0". If a pulse is present at the boundary of any bit cell, that pulse will be the synchronization clock pulse. A clock pulse will only occur between two "0" bit cell intervals.

In MFM, like FM, the minimum time interval between any two pulses is 2 μsec. However, since the clock and data information are now combined, the bit cell interval is the minimum time interval or 2 μsec. This information will allow the calculation of the maximum data transfer rate for MFM. 1 / bit cell invertal (2 μsec) equals 500 kHz.

Notice in Modified Frequency Modulation ALL the information to be placed on the disk media is useful data pulses. Therefore, MFM encoding is 100% efficient.

Written by--
Jimm Burk
Maintenance Training
54-077

## STOLEN INSTRUMENTS (INTERNATIONAL)

The following instrument has been reported by EMC as missing.

| PRODUCT | SERIAL NUMBER | LOCATION MISSING FROM |
|---|---|---|
| 335 Opt. 89 | 304179 | Rohde & Schwarz VErtriebs-GmbH |

If this instrument appears in your service area or you have any information regarding it, please contact the Service Support group in EMC.

--Editor

## TROUBLESHOOTING SYMPTOM GUIDES AVAILABLE FOR EUROPE

The following guides may be ordered for Europe through the EMC training department.

"Troubleshooting Symptoms - Graphics Terminals"

"Troubleshooting Symptoms - Graphic Systems"

"Troubleshooting Symptoms - Raster Scan"

Submitted by--
Hans Van Schijndel

## ADMINISTRATIVE SUPPORT

### SERVICE RECORD PROCESSING - MODULE EXCHANGE COPY

Factory Service has been receiving a large number of "Module Exchange Information Copies" even though a module has not been replaced. This copy of the Service Record can be discarded at the time of processing if no replacement has occurred. Please do not sent it back to Beaverton.

If a module is replaced and repaired in the field the repair data should be recorded on the Module Exchange Copy and this copy forwarded in the Blue Mailer to M/S 53-114.

If a module is replaced and sent to the Exchange Center the filled out Module Exchange copy should be sent with the board to the Exchange Center at M/S 56-101.

Remember it is imperative to press hard when filling out the Service Record. We must be able to read all copies in order to utilize the data.

--Bill Duerden
56-037, Ext. 8938 MR

## SAMPLING

### 1502, U1575 SOLDERED TO CIRCUIT BOARD

U1575 should be installed into a socket to allow for calibration of horizontal timing. If you receive an instrument in which U1575 has been soldered directly to the circuit board, remove U1575 and add a socket (P/N 136-0269-02).

--Rich Kuhns
58/511, Ext. 6782

## TM500

### PG501 OSCILLATION WHEN SWITCHING RANGES

When changing pulse duration and period from any range to the 10ms/20ms ranges, the output may break into oscillation. The 10ms timing capacitor C29 and stray C and L in the circuit will sometimes cause U30 to oscillate at about 40 MHz when ranges are changed.

To correct this problem, C29 was changed from 33pf (P/N 283-0642-00) to 43pf (P/N 283-0600-00) and a new 20 ohm resistor, R21 (P/N 315-0200-00) was added in series with C29. See following drawing for details.

Only PG501's exhibiting this problem need modification. All new instruments beginning at S/N B087068 will include this modification. If you have any questions, please call.

(Schematic to article on the following page)

Schematic to article continued on the following page

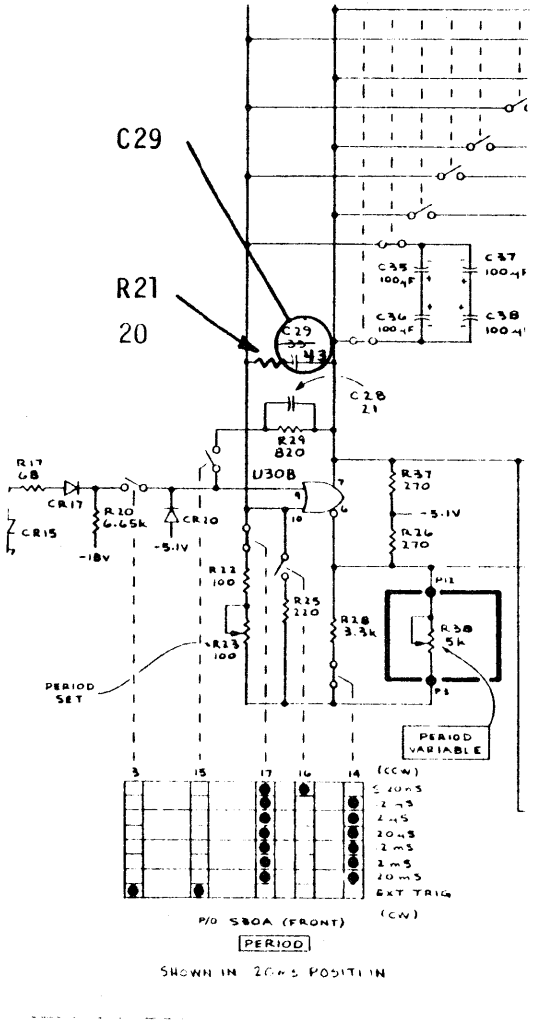


PARTIAL GENERATOR & TRIGGER AMPLIFIER CIRCUIT 1

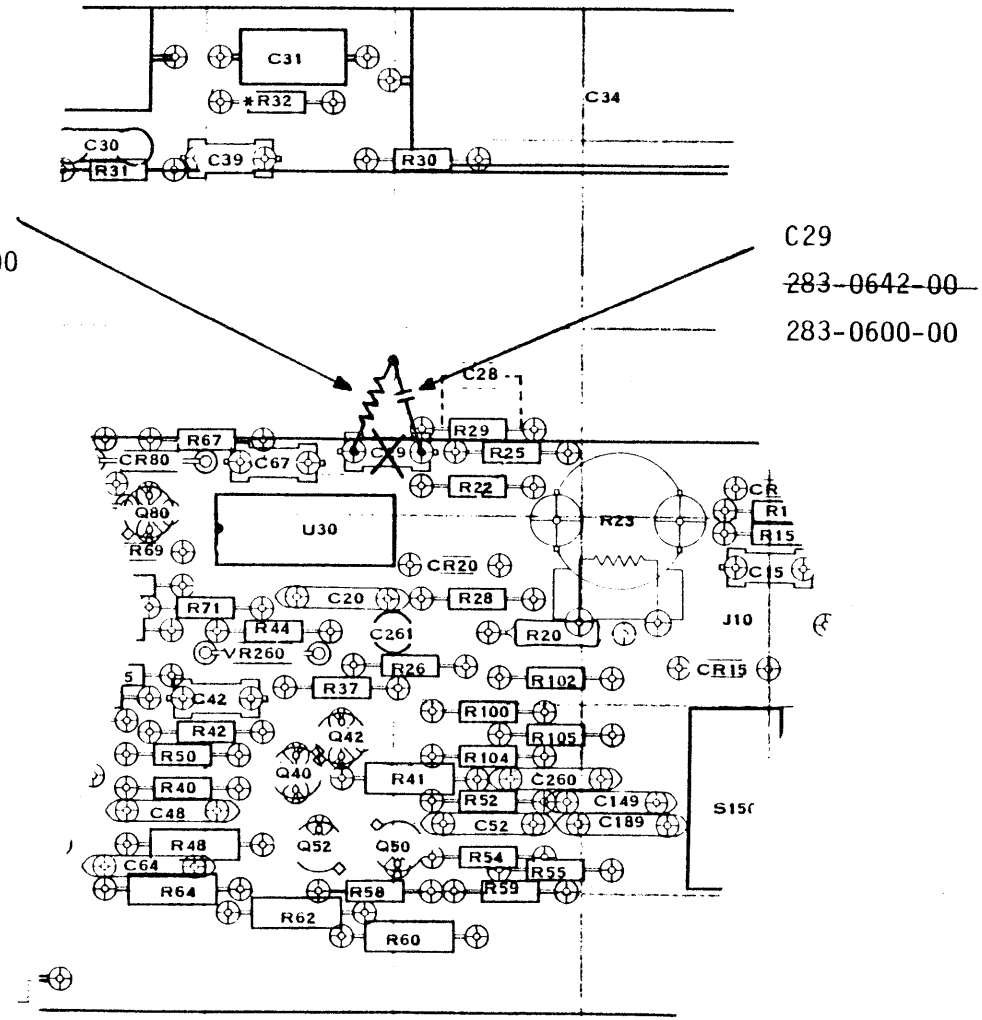


PARTIAL MAIN CIRCUIT BOARD

--Terry Turner
92-236, Ext. 1288

April 10, 1981
Issue 11-6

## SPECTRUM ANALYZERS

### 492/P MICROPROCESSOR SELF TEST LOOP ERROR - (A58CR2025)

The Cathode of diode CR2025 on the Processor Board (A58) has been connected incorrectly. As a result, in the "Test Mode" the microprocessor will not produce the correct waveforms as illustrated in the manual. This error does not affect the Normal Mode of operation. To correct the error, disconnect the Cathode end of CR2025 and connect it to the Cathode end of CR2024. (The Anode end of CR2025 is connected to Pin 3 of the resistor pack R1020). All instruments coming in for service should be corrected.

--Rich Andrusco
58/511, Ext. 1241

## 140 SERIES RTL LOGIC DEVICES

A recent question from the field concerning a possible ECB error on the 140 Line Timing board (670-0306-00) has brought up several problems.

1. If a Line Timing board is ordered, be aware of the possibility of an ECB defect connecting pin 2 (input) to pin 4 (ground) on U635A. Stocks should be checked for any further problems in this area.

2. The instruction manual (070-0944-00), diagram 6b, U635A shows pin 1 as the input to the IC. Correct this to read pin 2. Manual changes have been requested.

3. The IC used in U635 (156-0011-00) is used quite extensively throughout the instrument in a variety of configurations. The error in #2 (above) is not necessarily true in other parts of the manual. As shown below, the 156-0011-00 is a Dual-NAND gate and as such can assume a variety of logic uses depending upon connections used.

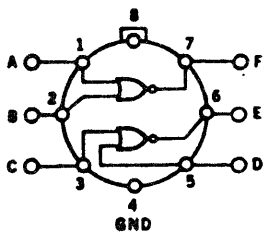


**FUNCTIONS**

POSITIVE LOGIC:

$F = \overline{A + B} = \bar{A}\bar{B}$

$E = \overline{C + D} = \bar{C}\bar{D}$

NEGATIVE LOGIC:

$F = \overline{\bar{A}\bar{B}} = \bar{A} + \bar{B}$

$E = \overline{\bar{C}\bar{D}} = \bar{C} + \bar{D}$

**SCHEMATIC DIAGRAM**

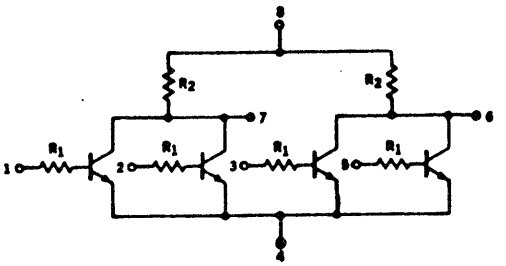


**TYPICAL RESISTOR VALUES**

$R_1 = 450\Omega$

$R_2 = 640\Omega$

4. If other discrepancies are found in the manual, we need to submit change requests, but verify the discrepancy carefully. Also, since the internal logic was not often published in older manuals, and information may be hard to come by on older IC's, let Service Support know when you need further documentation.

Thanks to Don Maher in Rockville for bringing this to our attention.

--Bill Bean
58/511, Ext. 1498

## 520 TRACE ABERRATIONS

In the VECTOR mode, a dough-nut-like vector aberration has usually been associated with oscillations eminating from the test circle generator. If you encounter difficulty in getting the vector dots to appear sharp and well defined, disabling the test circle oscillator by removing its crystal (Y40, ◇1) will isolate this portion of the circuit. If the problem is not here, make sure that the gonimeter shields are well grounded by putting a starwasher between the shield and the front panel.

Other possible solutions include cleaning the Input Amp circuit board thoroughly and checking the power supplies for ripple and regulation. Look for leaky electrolytic capacitors in the power supply (C1522, C1552, C1502, C1532, C1562 and C1624).

Thanks to Tom Doak in Philadelphia and Theron Eaton in Vectorscopes Manufacturing for their inputs.

--Bill Bean
58/511, Ext. 6507

## 529 FIELD CASE

The 529 protective vinyl field case is part number 016-0085-00 for the cabinet model only. (1480 series uses the same part number.)

Manual changes have been requested. Thanks to Garland Lee in Denver for this input.

--Bill Bean
58/511, Ext. 6507

## 650 SERIES CRT VENDOR I.D. NUMBERS

As the 650 series color monitors have penetrated the marketplace deep enough to reach individual consumers/hobbyists, increasing numbers of inquiries concerning vendor numbers of the CRT's are being generated. The principal focus of these questions is aimed toward testing the CRT's with commercial CRT tester/rejuvenators. Since most CRT testers don't list Tektronix part numbers in their set-up tables, the following numbers are provided.

| TEK PART NUMBER | INSTRUMENT | SONY TYPE NO. |
|---|---|---|
| 154-0641-01 | 650 Series<br>650A Series | 330 AB22 |
| 154-0782-00 | 650A Series | 330 HB22 |
| 154-0803-00 | 650HR Series | 330 JB22 |

The Sony type number may also be on a label affixed to the CRT neck.

--Bill Bean
58/511, Ext. 6507

## 650 SERIES, RED CLAMP OSCILLATIONS

Reference: Mod #39808

| | |
|---|---|
| 650, 650A-1, 655A, 655A-1 | B083399 Through B083929 |
| 650HR-1, 655HR, 655HR-1 | B020384 Through Current |

A circuit board error has been found in the listed products. The junction of R2739 and C2641 on the NTSC Decoder Board (670-2611-07) is connected to ground, causing an oscillation or "ringing" in the red clamp circuit. The defect is being corrected in manufacturing by cutting two circuit board paths as shown in the accompanying figure, pending a formal mod and ECB change. If red clamp oscillation is encountered in an instrument being serviced, insure this correction has been implemented prior to proceding with further troubleshooting.

---

Schematic to article on the following page

---

--Bill Bean
58/511, Ext. 6507

INTERIUM SOLUTION

DECODER BOARD

670-2611-07

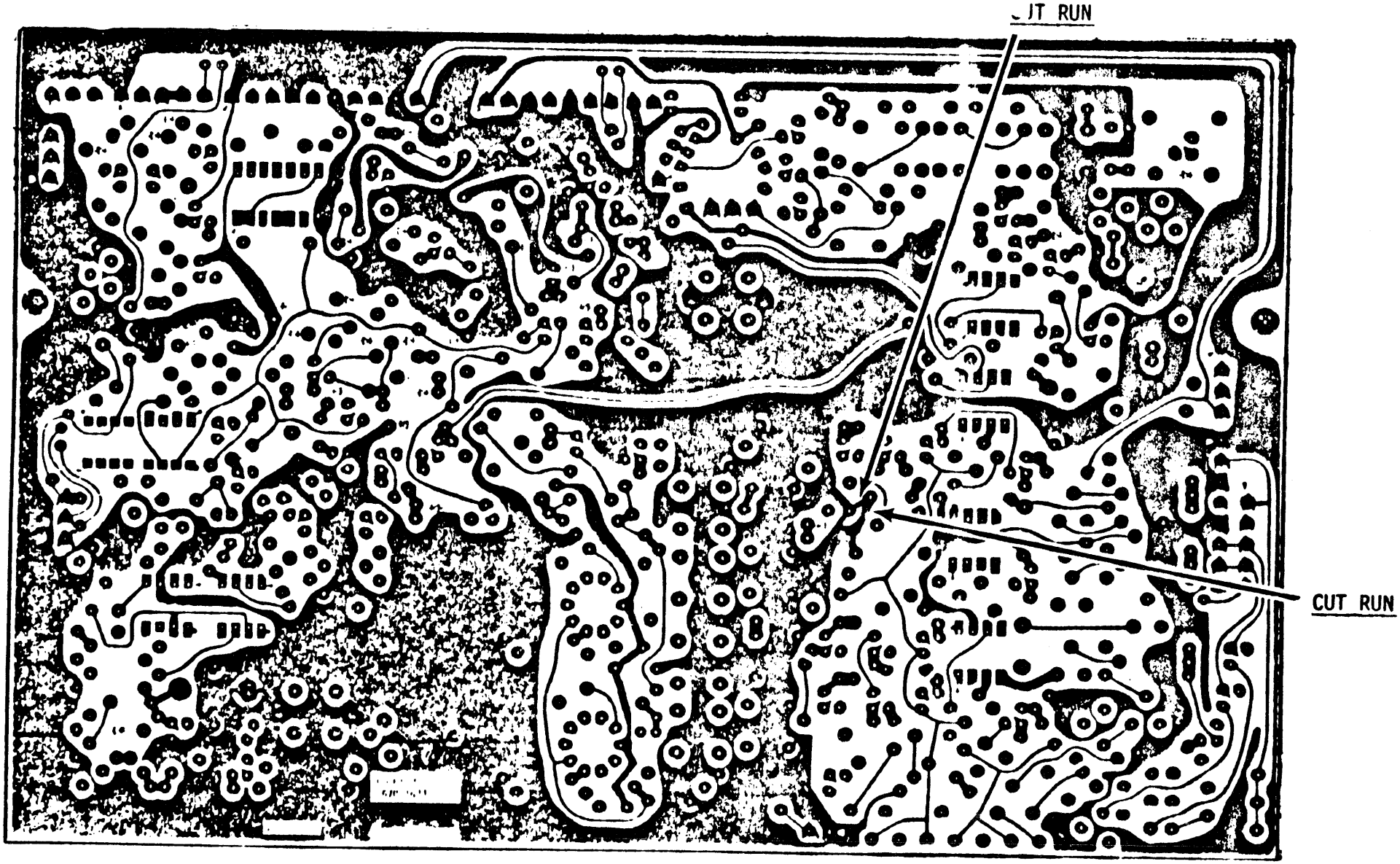

## 1440 MODIFIED PRODUCTS PARTS LOCATIONS

Copies of filmwork have been obtained that show parts locations for three complex circuit boards used in 1440 modified products (I2R, I3B, I3C). Duplicates will be made and distributed to TV Service Centers as appropriate. If your Service Center is somehow missed, call me or send an IOC for your copies. The boards affected are:

| | |
|---|---|
| 670-4591-XX | Insertion Control |
| 670-4592-XX | Insertion Timing |
| 670-2512-XX | Processing Board |

Let us know if these are of substantive value to allow us to evaluate our needs.

--Bill Bean
58/511, Ext. 1498

## 1480 SERIES POOR FOCUS IN LINE SELECT MODE

If a customer complains of poor focus during Line Select operating mode, before you have him bring the unit in for repair, make sure that the LINE STROBE OUT connector has not been terminated in 75 ohms. This output is TTL levels and terminating it improperly can decrease the pulse driving Z-Axis Logic from about 4 volts to less than 1 volt, thereby severely affecting focus potentials.

Thanks to all of you in the field that input this information.

--Bill Bean
58/511, Ext. 1498

## 1900 FCC COLOR BAR VIT CHROMINANCE

Reference: 1900 Operator's Manual, P/N 070-3443-00, Page 1-2, Footnote b

If a Transmitter Test Set (Std.) or a Studio Test Set (Opt. 1) is not genlocked to an incoming signal that contains color information (Burst), Line 17 Field 2 will change from Color Bars to the luminance levels of Bars/Y, as per FCC Rules and Regulations 73.676(f).

--Bill Bean
58/511, Ext. 1498

## 1900 RACK LATCH COLORS

Two colors of rack mounting latches are available:

| | |
|---|---|
| 105-0786-01 | Light Grey |
| 105-0786-02 | Dark Grey |

Order the color appropriate for your application.

Thanks to Al Senkbeil in Orlando for this one.

--Bill Bean
58/511, Ext. 6507

## LOGIC ANALYZERS

### 308 PART NUMBER CORRECTION

In reference to Wizard Article "308 TIME BASE STABILIZATION" published January 30, 1981, the replacement part number given for C260 was incorrect. The correct part number is 281-0628-00.

--Pat Wolfram
92-236, Ext. 1582

## PORTABLES

### 468 SERVICE UPDATE PLAN #3002

Service Update Kit, P/N 045-0023-00, has been set up to repair the defective overvoltage protection circuit in certain early production 468's from both Beaverton and Heerenveen.

Q157 on A19, Time Base/Power Supply board, needs to be replaced with a new SCR. Complete instructions and parts are included in the kit, P/N 045-0023-00. Refer to the 468 Service Update Program, #3002, which has been distributed to all service locations for the serial number list of affected instruments and ordering information.

*NOTE -- NOT ALL 468's REQUIRE THIS MODIFICATION.*

Customers have been notified of this update program. When contacted by a customer, be sure to check the serial number against the list provided to make sure that only units that need the modification are sent in to be repaired.

All 468's coming into a Service Center should be checked against the serial number list and modified if necessary.

In the U.S., all activity related to this Service Update Program should be charged to *ACTIVITY CODE 18*.

International locations should utilize the Subsidiary Installed Product Upgrade Report.

--Roy Lindley
58/511, Ext. 1235

618 OPT 30 CABLE (012-0824-00)

Reference: 618 Manual 070-2767-00

It has been brought to my attention by field service that some of the 618 Option 30 cables have been received by customers with pins in wrong locations. On the J1000 end pin 13 (+Y) is in pin 14 location and pin 17 (-Y) is in pin 18's locations. +Y should be in pin 13 and -Y should be in pin 17. Please see referenced manual, pages 2-19 and C-1.

When used with an IBM3277 in Self test mode, the symptom is a dot in the middle of the screen instead of a diagonal vector. Be aware that this problem will NOT show up when using the 067-0807-00 test fixture.

Thanks goes to John Breen of the St. Paul Field Office for providing us with the solution.

--Dennis Painter
63-503 EXT. 3597

## 463X CUTTER CLUTCH CHATTER

The 463X cutter clutch has been known to "chatter" with the paper cassette holder latched in place. The chatter disappears upon unlatching the holder.

The cause of the chatter is that the rotary knife stop (see figure below) is positioned too low. If the position of the stop is set too low, a constant downward force is put against the pin in the end of the cutter actuator. This in turn causes binding inside the clutch and produces the chatter.

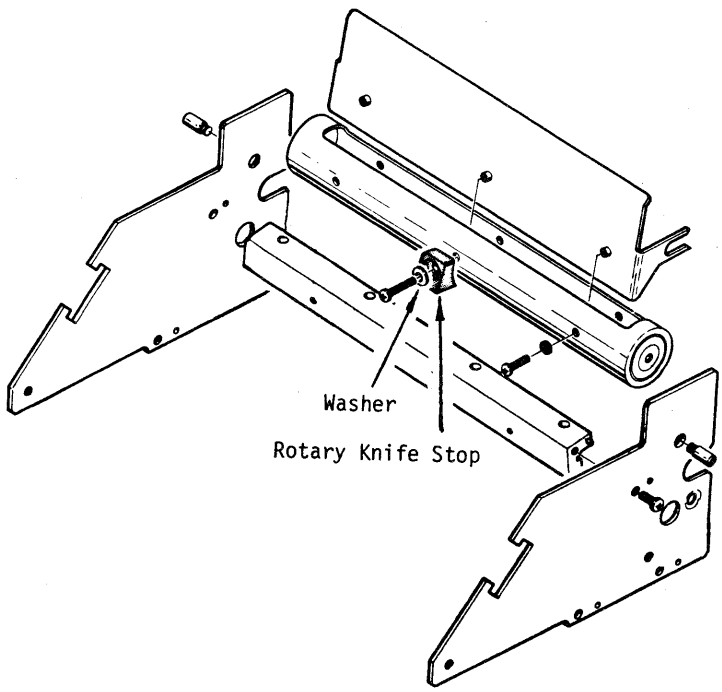


To correct the problem, reposition the knife stop higher on the rotary blade. On earlier instruments where the 214-1932-00 actuator has been replaced by the 105-0781-00, it may be necessary to remove the washer in order to position the stop high enough to prevent chatter. Since the introduction of the new actuator with its greater range of motion, products have been shipped without the washer for just this reason.

People familiar with the 463X series of products are also aware of the "groan" of the paper core as paper is pulled from a part-full canister. Tapping the canister on end onto a table top may cure this.

--George Kusiowski
63-503 EXT. 3928

## 4642 JUMPER CONFIGURATIONS

There have been questions about the proper method for changing jumper configurations in a 4642. This is due to the various jumper styles used in this product. On the RS232 Interface Board the jumpers can be changed right on the board itself. However, on the Logic Board the jumpers are changed in sets of 16 at a time using a zero ohm resistor network which plugs into an I/C socket. The I/C sockets are referred to as jumper platforms in the manuals and are numbered X1 thru X6.

CAUTION:

The jumper platforms are frequently mounted on the logic board reversed. When installing jumper networks into these sockets use the rest of the logic board's integrated circuits for a correct reference to the correct location of pin one. Note in the following example how pin one is the lower right pin, instead of the upper left pin, as the socket would indicate.

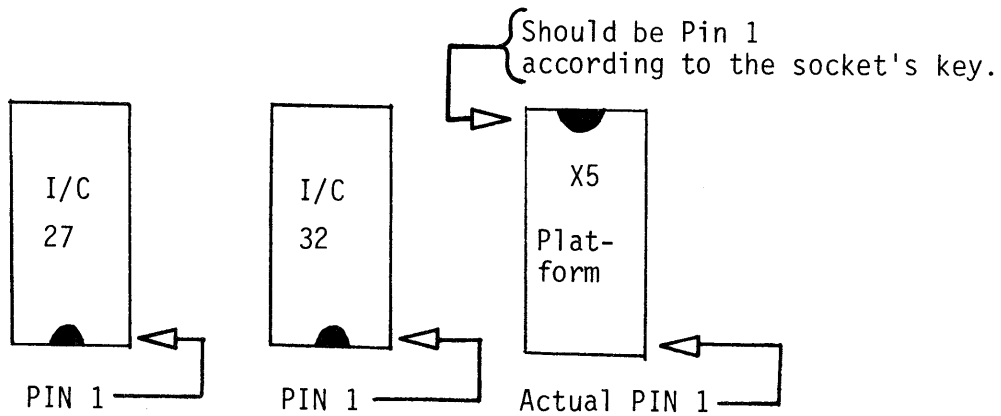


The following Platform Configuration table is the same table found on pages 4-21 thru 4-23 of the 4642 Service Manual, with the exception of asterisks (*) that have been placed under the Binary Code column to indicate standard 4642 configuration.

--Larry North
63-503 EXT. 3926

The following is an example of how to use this chart.

1. It is a customer's request for the 4642 to automatically line feed whenever it receives a carriage return.

2. The auto line-feed function can be found listed under the "Signal Function Remarks" column for platform location X5.

3. The platform jumper going from pin 14 to pin 3 should be removed and a new jumper from pin 14 to pin 2 added.

4. This changes the "Binary Code" for "Group II" to a zero. This in return, would remove the "Octal Code" value of 10 from platforms octal part number suffix. The correct Centronix part number for this new jumper configuration would change from a 63080164-20<u>13</u> to 63080164-20<u>03</u>.

    A. The last two digits of a jumper's part number, 63080164-20<u>XX</u>, is the total sum of its octal code.

The jumpers can be purchased pre-configured by the Centronix part number, or a blank jumper can be purchased and configured by hand.

The blank jumpers (Interconnect sockets), P/N 136-0503-00, have the necessary 16 pin network, but care must be taken when soldering the jumpers onto it because too much heat may deform the plastic base. If this happens, the jumper platform may not fit properly into the socket on the Logic Board.

For the RS232 Interface the jumper configuration options are listed in Table C-2 on page C-5 of the 4642 Service Manual. The standard 4642 configuration includes options C, F, I, L, N, and P; all other jumper options should not be present. Not included in the jumper options are the baud rate jumpers, E1 thru E20, which are normally set to 2400 Baud, although it can range from 600 to 9600 Baud.

Baud rates below 600 are not possible with a standard 4642 due to the limitations of the interfaces components. The following table shows the possible baud rate jumper configurations.

## 4642 JUMPER CONFIGURATIONS (CONTINUED)

| Baud Rate | Jumpers From | To |
|---|---|---|
| 600 | E10 | E20 |
| | E9 | E19 |
| | E5 | E15 |
| | E7 | E17 |
| | E8 | E18 |
| | E2 | E12 |
| | E3 | E13 |
| | E1 | E11 |
| 1200 | E9 | E19 |
| | E4 | E14 |
| | E7 | E17 |
| | E8 | E18 |
| | E2 | E12 |
| | E3 | E13 |
| | E1 | E11 |
| * 2400 | E4 | E14 |
| | E6 | E16 |
| | E8 | E18 |
| | E2 | E12 |
| | E3 | E13 |
| 4800 | E6 | E16 |
| | E5 | E15 |
| | E2 | E12 |
| | E3 | E13 |
| 9600 | E5 | E15 |
| | E7 | E17 |
| | E3 | E13 |

* Standard 4642 Configuration

The 4642 Service Manual is being updated to include this baud rate table.

~~Table 4-3~~

**PLATFORM CONFIGURATION**

| Platform Location | Group | Octal Code | Binary Code | Platform Pin From | Platform Pin To | Signal Function | Remarks |
|---|---|---|---|---|---|---|---|
| X1 | I | 20 | 1 | 1 | 16 | ME6-3 = ±0V | Used for column width selection |
| | | | 0 * | 1 | 15 | ME6-3 = ±5V | |
| | II | 10 | 1 | 14 | 3 | ME6-4 = ±0V | |
| | | | 0 * | 14 | 2 | ME6-4 = ±5V | |
| | III | 4 | 1 | 4 | 13 | ME6-13 = +5V | |
| | | | 0 * | 4 | 12 | ME6-13 ±0V | |
| | IV | 2 | 1 | 11 | 6 | ME6-12 = ±0V | Used for column width selection |
| | | | 0 * | 11 | 5 | ME6-12 = +5V | |
| | V | 1 | 1 | 7 | 10 | NOT USED | |
| X1 | | | 0 * | 7 | 9 | NOT USED | |
| X2 | I | 20 | 1 | 1 | 16 | INV. DATA STROBE | |
| | | | 0 * | 1 | 15 | STD. DATA STROBE | |
| | II | 10 | 1 | 14 | 3 | ME12-12 = ±0V | Used for column Width selection |
| | | | 0 * | 14 | 2 | ME12-12 = +5V | |
| | III | 4 | 1 | 4 | 13 | ME12-4 = +5V | |
| | | | 0 * | 4 | 12 | ME12-4 = ±0V | |
| | IV | 2 | 1 | 11 | 6 | ME12-13 = ±0V | |
| | | | 0 * | 11 | 5 | ME12-13 = +5V | |
| | V | 1 | 1 | 7 | 10 | ME12-3 = +5V | Used for column width selection |
| X2 | | | 0 * | 7 | 9 | ME12-3 = ±0V | |
| X3 | 1 | 20 | 1 * | 1 | 16 | NON GATED STROBE | |
| | | | 0 | 1 | 15 | GATED STROBE | |
| | II | 10 | 1 * | 14 | 3 | DS8* = DS8 | Bit 8 Low |
| | | | 0 | 14 | 2 | DS8* = DS8 | Bit 8 High |
| | III | 4 | 1 | 4 | 13 | DSC | |
| | | | 0 * | 4 | 12 | NOT DSC | |
| | IV | 2 | 1 | 11 | 6 | DS8' = DS8 | X3-7 TO X3-10 |
| | | | 0 * | 11 | 5 | DS8' = DS8 | X3-7 TO x3-10 |
| | V | 1 | 1 | 7 | 10 | DS8' = DS8 OR DS8 | See X3 Group IV |
| X3 | | | 0 * | 7 | 9 | DS8' = ±0V | |
| X4 | I | 20 | 1 | 1 | 16 | SELECT DOES NOT CAUSE PRIME | |
| | | | 0 * | 1 | 15 | SELECT CAUSES PRIME | |
| | II | 10 | 1 | 14 | 3 | UCC RESET = TB8 | In line elongated |
| | | | 0 * | 14 | 2 | UCC RESET = PRIME | Full line or no elongated |
| | III | 4 | 1 | 4 | 13 | DECODED BIT 8 | Octal 34 sets, 35 resets |
| | | | 0 * | 4 | 12 | STD BIT 8 | |
| | IV | 2 | 1 * | 11 | 6 | UCCSET = UPSC | X4-7 to x4-9 full line elongated. |
| | | | 0 | 11 | 5 | UCCSET = +5V | X4-7 to X4-9 no elongated |
| | V | 1 | 1 | 7 | 10 | UCCSET = TB8 | In line elongated |
| X4 | | | 0 * | 7 | 9 | UCCSET = UPSC OR +5V | See X4 Group IV |
| X5 | I | 20 | 1 | 1 | 16 | NOT USED | |
| | | | 0 * | 1 | 15 | NOT USED | |
| | II | 10 | 1 * | 14 | 3 | NO AUTO LF | |
| | | | 0 | 14 | 2 | AUTO LF | |
| | III | 4 | 1 | 4 | 13 | NOT USED | |
| | | | 0 * | 4 | 12 | NOT USED | |
| | IV | 2 | 1 * | 11 | 6 | PERFORMS LF WHEN VT OR TOF IS SENT | X5-7 to X5-10 |
| | | | 0 | 11 | 5 | IGNORES VT OR TOF OR DOES NOT IGNORE VT OR TOF | See X5 Group V |
| | V | 1 | 1 * | 7 | 10 | IGNORES VT OR TOF OR PERFORMS LF WHEN VT OR TOF IS SENT | See X5 Group IV |
| X5 | | | 0 | 7 | 9 | DOES NOT IGNORE VT OR TOF | X5-11 to X5-5 |
| X6 | I | 20 | 1 * | 1 | 16 | ROMTBB = TB7 | |
| | | | 0 | 1 | 15 | ROMTB8 = TB8 OR TB8 +5V OR +0V | See X6 Group III |
| | II | 10 | 1 | 14 | 3 | CHADD7 = TB6 | |
| | | | 0 * | 14 | 2 | CHADD7 = TB7 | |
| | III | 4 | 1 | 4 | 13 | ROM TB8 = TB8 OR TB8 | See X6 Group IV, X6-1 to X6-15 |
| | | | 0 * | 4 | 12 | ROM TB8 = +5V OR ±0V | See X6 Group V, X6-1 to X6-15 |
| | IV | 2 | 1 | 11 | 6 | ROM TB8 = TB8 | X6-13 to X6-4, X6-15 to X6-1 |
| | | | 0 * | 11 | 5 | ROM TB8 = TB8 | X6-13 to X6-4, X6-15 to X6-1 |
| | V | 1 | 1 | 7 | 10 | ROM TB8 = ±0V | X6-12 to X6-4, X6-15 to X6-1 |
| X6 | | | 0 * | 7 | 9 | ROM TB8 = +5V | X6-12 to X6-4, X6-15 to X6-1 |

" * " IN THE BINARY CODE COLUMN INDICATES THE STANDARD 4642 CONFIGURATION

## 4663 PEN CARRIAGE HEIGHT GAUGE

A new tool has been made that can be used to measure a 4663's pen carriage height; it is called, and properly spelled "gage block", P/N 003-0957-00.

The gage block is made of .105 inch stock with one end shaved to .085 inch. A correctly positioned pen carriage should be between .105 and .085 inches from the platen surface.

To correctly measure the pen carriage height, lay the gage block flat on the platen surface and gently try to slide both of it's ends under the pen carriage at the points illustrated by the arrows below.

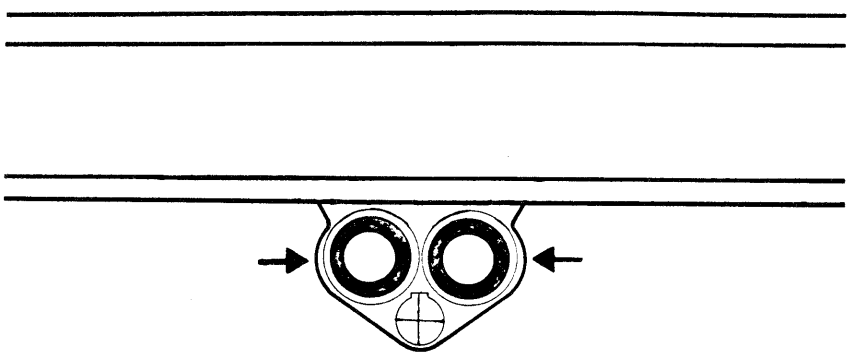

The shaved end of the gage block should easily slide under the carriage, whereas the thick end should not.

There can be up to a ninety day leadtime, so orders placed against the gage block may take several months to be filled.

--Larry North
63/503, ext. 3926 (WI)

4663 PLATEN CLEANING PROCEDURE, REV.

SUPERSEDES: Wizards Workshop, May 18, 1979, Issue 9-9, Page 20. "4663 Plotter, Do Not Use Alcohol on Platen."

Wizards Workshop, July 11, 1980, Issue 10-14, Page 21."4663 Platen Cleaning Procedure."

Look into the customers cleaning procedure, or lack of the same, whenever difficulty is experienced with the electrostatic paper holddown ability of the 4663 platen. Occasional cleaning helps retain the electrostatic paper holddown ability of the platen. The frequency of cleaning varies with the instrument's environment. Use the following procedure to clean the platten.

1) Press the front panel MEDIA CHANGE switch. (If the Plotter was not in SHEET mode previously, it will be necessary to press MEDIA CHANGE twice to move the pen carriage to the upper right corner; turn the POWER switch off and disconnect the power cord. Remove any paper present on the platen.

CAUTION

Abrasive and strong chemical cleaners can scratch or remove layers of the thin insulating film on the platen's electrostatic surface. Conductive cleaners must also be avoided. These include products containing ammonia, oils, liniments or scents which leave an electrically conductive film if not entirely removed. Any remaining film causes the electrostatic paper holddown to fail due to the conductivity of the film residue. Isoprophyl alcohol should not be allowed to seep under the paper guides, since it will break down the adhesive holding the paper guide strips to the platen.

2) Water should be used to clean the platen, since water will not leave a residue on the platen's surface.

3) If the platen is especially dirty, a plain detergent or alcohol pad (TEKTRONIX part number 006-2398-00) may be used to clean the platen. Both of these are more effective cleaners than is water alone; but they leave a residue which must be removed. (A plain detergent is one free of additional ingredients such as bleach, scents, fabric softeners, and colored crystals.)

4) To remove any residue created in the preceding step, dampen and wring well a soft clean cloth. Wipe the platen with the damp cloth, turning the cloth frequently to prevent smearing the residue. If alcohol was the cleaning agent, one thorough wiping of the platen is sufficient. If detergent was used to clean the platen, this wiping procedure must be repeated a minimum of three times to remove all residue.

5) Dry the platen with a clean, dry cloth.

6) Connect the power cord to the power source. The plotter may again be operated.

If the platen's surface is allowed to have built up dust or dirt left on its surface, in time this will eventally work into it's semi-porous surface and defeat the electrostatic paper holddown.

## 4663 ROM OVERLAY, EXCHANGE PROCEDURES

Recently, questions have risen concerning correct handling procedures for the ROM Overlay board (p/n 670-6275-0X).

The following is an effort to clarify the correct method for handling the various levels of ROM Overlay boards.

Summary: Level 2 and below ROM Overlay boards should have been returned with the Processor board as a set, therefore, no inventory adjustments were/are available for the ROM Overlay by itself. Level 3 Overlay boards and above should be returned separate from Processor board for individual inventory adjustments.

History:

Firmware Version 1 and 2

ROM Overlay board p/n 670-6275-02 and below are not on the Exchange list. The ROM Overlay board was placed into the 4663 to cover ROM shortages. During the periods of time that ROM shortages existed, Board Exchange accepted the ROM Overlay with a Processor Board as one assembly. They perform the repair and ship both boards out if there were insufficient ROMs. If there were sufficient ROMs to support a fully loaded Processor board, only the Processor board was returned.

Inventory adjustments were not issued for any ROM Overlay boards p/n 670-6275-02 and below.

This above policy is still in effect.

Reference: Wizards Workshop Issue 10-7 April 4, 1980 "4663 ROM SHORTAGE."

Firmware Version 3 and 4

ROM Overlay board p/n 670-6275-03 and above are listed on the Board Exchange list.

This is due to the fact that part of the 4663's firmware operating system is not available in masked ROMs and is contained on the ROM Overlay.

ROM Overlay board p/n 670-6275-03 and above are handled in a normal manner, i.e. inventory adjustments are made.

--Steve Prunty
63-503, Ext. 3593

MICROCOMPUTER DEVELOPMENT PRODUCTS (MDP)

## F8 EMULATOR MEMORY MAPPING CAPABILITIES

The F8 Emulator does not support Mode 1 mapping. As the Emulator is currently shipped from the factory, only program memory can be accessed in Mode 1. To enable the UMAP control line on the Emulator, W1136 must be cut and restrapped. This configuration is not supported. In order to understand the reasons for not supporting Mode 1 mapping, the memory-referencing capabilities of the F8 family must be examined.

The F8 CPU (3850) controls the peripheral chips via 5 ROMC control lines. The various states of these lines indicate the type of operation to be perfromed. As an example the state of the ROMC lines will indicate if an instruction fetch, register load or an I/O operation is to take place. All memory-referencing logic, including the program counter, is located on peripheral chips. Loading and incrementing of the program counter is controlled by the ROMC lines.

The following example will show why Mode 1 mapping will not allow proper system operation in all cases. A 3853 SMI is used by the emulator for referencing program memory. In this example it will be assumed a 3853 SMI is also used on the prototype.

When a ROMC state occurs that loads the low byte of the PC (program-counter) from a memory location and the memory location is mapped to program memory, the following will occur. The ROMC state will be output to both the emulator and the prototype. It will cause the 3853 on the emulator and the 3853 on the prototype to access their respective memory locations. The data from both program and prototype memory will then be loaded onto the data buss and then into the low byte of the PC. Note that the data buss buffers on the driver/receiver board are disabled during this time to avoid buss contention. The potential for a problem now exists. If the two memory locations didn't contain the same information, the PC of the 3853 on the emulator and on the prototype are now different. If the mapping logic was to change from program to user memory, the PC on the prototype would not be referencing the correct memory location.

The condition described above can exist with either the PC (program counter) or the DC (data counter). To avoid the problem the entire address space must be mapped exclusively to either program or user memory. This will not affect I/O operations. Modes 0 and 2 are implemented in the usual manner.

Information regarding the lack of adequate documentation was relayed to us by Les Aeder, Detroit Field Office.

--Kevin King, Brad Griffin
92-236, Ext. 1636, 1608

## S-3200 MANUALS

In the past an extra set of manuals for service was included with each system shipped. To eliminate duplication of manuals a change has been made in the manuals distribution process. A manual list will now be included with the system notification IOC sent to the Service Managers. The Manager should give this manual list to the field technician for review. Following review the technician may order any necessary manuals through CMS.

When newer manuals are published, Service Support will notify the field through Wizards articles. Information on available manuals may be found in the microfiche under "Master Publication Index" and the "S-3200 Family Cross Reference".

--Joe Lipska
92-236, Ext. 1634 WR

## GENERAL

### BEAVERTON SERVICE SUPPORT GROUP - NEW PHONE EXTENSIONS

The Danray phone system has been installed in Building 58. As a result, the Beaverton Service Support group now has a new set of phone extensions. Please update your phone listings and begin using the new extensions as of this date.

The Performance Assurance Engineer (PAE) provides technical support on all assigned products that are currently in production. For products no longer in production but still in the Long Term Support Program, Factory Service (Extension 8600, Merlo Road) provides troubleshooting, repair and calibration information only. All other support questions, i.e. parts, documentation, should be addressed to the Service Support PAE.

| PRODUCTS | PAE | EXTENSION |
|---|---|---|
| 5000 Series & 7854 | John Eaton | 1237 |
| 7000 Series (Except 7854) | Lynn Sperley | 1236 |
| Portable Scopes (200, 300, 400 Series) (Except 308) | Mike Laurens | 1499 |
| Spectrum Analyzers/TDR's | Rich Kuhns | 1240 |
| Television Products | Bill Bean | 1498 |
| Accessories (Cameras, Probes, Scope Carts, A67XX) | Open | |

The Service Program Specialist (SPS) is primarily involved in New Product Introduction and service policy questions. The SPS will also provide backup technical support when the PAE is not available.

| PRODUCTS | SPS | EXTENSION |
|---|---|---|
| 5000 Series<br>7000 Series | Dick Freshour | 1238 |
| Portable Scopes<br>Accessories | Roy Lindley | 1235 |
| Spectrum Analyzers/TDR's | Rich Andrusco | 1241 |
| Television Products | Steve Schmelzer | 1497 |
| Metrology<br>Capital Equipment Planning | Tom Fox | 1496 |
| **ADMINISTRATION & SUPPORT** | | |
| Todd Paulus | Service Program Manager | 1493 |
| Brenda Mohr | Secretary II | 1495 |
| Patti Villareal | Secretary II | 1494 |

--Todd Paulus
58-511, Ext. 1493

## INFORMATION DISPLAY DIVISION

### 4081 MANUAL PART NUMBERS

Following is a complete list of manuals available for the 4081. This list was published in Volume IV of #SYSTAT. It is being inserted in this Wizard for those who support the 4081 but do not receive #SYSTAT.

--Bill Hatch
63-503 EXT. 3787

### 4081 MANUALS

| Part Number | Manual Title |
|---|---|
| STANDARD DOCUMENTATION | |
| 070-1950-00 | 4081 Graphic System Operator's Reference |
| 070-1951-01 | 4081 Operator's Guide |
| 070-2622-00 | Plot 80: Intelligent Graphics Terminal (IGT) Implementation Guide |
| 070-2071-00 | Plot 80: IGT User's |
| 070-2072-00 | Plot 80: IGT Host Support Users |
| 070-2183-00 | 4081 IGT Host Support Systems |
| 070-2233-00 | PLOT 80: IGT Host System Programmers Reference Guide |
| 061-1859-00 | PLOT 80:IGT2 Reference |
| 070-2181-00 | PLOT 80: Picture Data Base |
| 070-2182-00 | PLOT 80: Digitizer Operator's Manual |
| 070-2293-00 | PLOT 80: 4080A03 Graphic Function Manager (GFM) User's Manual |
| 070-2543-00 | Plot 80: 4014 Emulator |
| 4080A04 DOCUMENTATION | |
| 070-2073-00 | PLOT 80: GOS TECO Users |
| 070-2074-01 | PLOT 80: Assembly Language Programmers |
| 070-2075-00 | PLOT 80: RAIDS Debugging System<br>C1/1277 RAIDS Update<br>C2/678 RAIDS Update |
| 070-2076-00 | PLOT 80: GOS Programmers Reference<br>C1/1077 GOS Programmers Reference Update |
| 070-2115-00 | PLOT 80: Library Linker/Loader<br>C3/578 Linker/Loader Update |
| 4080A05 DOCUMENTATION | |
| 070-2648-00 | PLOT 80: FORTRAN IV Reference Manual |
| 070-2187-02 | PLOT 80: FORTRAN IV Run Time Library |
| 061-1860-00 | PLOT 80 4080A05 DGSS (Distributed Graphics Support Subroutines) Reference Manual, Volume I |
| 061-1989-00 | PLOT 80 4080A05 DGSS (Distributed Graphics Support Subroutines) Reference Manual, Volume II |

MISCELLANEOUS

| | |
|---|---|
| 070-1787-00 | 4953/54 Tablet Reference Card |
| 070-1791-01 | 4953/54 Graphics Tablet<br>C11/680 Graphics Tablet Update |
| 070-2212-00 | 4953/54 Option 30 Graphics Tablet Operators |
| 070-1932-01 | 4662 Interactive Digital Plotter Users |
| 070-2556-00 | 4662 Interactive Digital Plotter Users Reference Card |
| 070-1933-00 | 4662 Interactive Digital Plotter Service<br>M25579, Sep 79<br>C8/880 Plotter Update |
| 070-2110-00 | 4641/4641-1 Character Printer Operators |
| 070-2111-00 | 4641/4641-1 Character Printer Service |
| 070-2116-00 | 4081 Graphics System Technical Data |
| 070-2117-01 | 4081 Graphic System Parts Manual<br>M33805, Jun 78<br>M34080, Jun 78<br>M34118, Jun 78<br>M37480, Feb 80 |
| 070-2118-01 | 4081 Graphic System Schematics Manual |
| 070-2269-01 | 4905 Mass Storage Module Operators<br>C4/580 Mass Storage Update |
| 070-2365-00 | 4905 Mass Storage Service<br>M32535, Jan 1978<br>C1/379 Mass Storage Update |
| 070-2297-00 | 067-0772-00 Hexadecimal-Display Panel Instruction |
| 070-2343-00 | 067-0794-00 Romulan Loader Instruction<br>C1/978 Romulan Loader Update<br>C1/179 Romulan Loader Update |
| 070-2367-00 | 119-0845-00 Flexible Disc Drive Service (CALCOMP drive)<br>C1/677 Flexible Disc Update |
| 070-2504-00 | 119-0977-00 Flexible Disc Drive Inst. (SHUGART drive) |
| 070-2369-00 | 119-0852-00 Hard Disc Drive Service |
| 070-2370-00 | 119-0853-00 Hard Disc Controller Service |
| 070-2371-00 | 119-0851-00 Selector Channel Service |
| 070-2396-00 | 4081F06 (4081 Option 6) CDC Synchronous Communications Interface Service |
| 070-2395-00 | 4081F06 (4081 Option 6) CDC Synchronous Interface User's<br>C1/778, Interface User's Update |

NOTE: The C#/### and M#####'s refer to change information sheets printed since the manual was printed.