# TECHNICAL DATA

**TEKTRONIX T507P___**

12/18/61

The Tektronix Type T507P___ is an aluminized 5-inch flat-faced cathode ray tube with electrostatic focus and deflection and a helical post-accelerator. The T507P___ was designed primarily for use in the Tektronix Type 507 Oscilloscope.

## MECHANICAL SPECIFICATIONS:

| | |
|---|---|
| Overall length | $17\frac{1}{2} \pm \frac{3}{16}$ inches |
| Greatest diameter of bulb | $5\frac{5}{16}$ inches |
| Bulb contact | J1-21 |
| Neck pin diameter | 0.040±.002 inch |
| Base | JEDEC NO. B14-38 |
| Bulb and base alignment | See outline drawing |

## ELECTRICAL DATA:

| | |
|---|---|
| Heater voltage | 6.3 volts RMS |
| Heater current | 0.6±10% ampere RMS |
| Helix resistance | 200 megohms Min. |
| Capacitance, interelectrode (typical values) | |
| Grid No. 1 to all other electrodes | 8.3 $\mu\mu f$ |
| Cathode to all other electrodes | 4.6 $\mu\mu f$ |
| $DJ_1$ to $DJ_2$ | 1.8 $\mu\mu f$ |
| $DJ_1$ to all other electrodes except $DJ_2$ | 3.7 $\mu\mu f$ |
| $DJ_2$ to all other electrodes except $DJ_1$ | 3.7 $\mu\mu f$ |
| $DJ_3$ to $DJ_4$ | 1.2 $\mu\mu f$ |
| $DJ_3$ to all other electrodes except $DJ_4$ | 2.5 $\mu\mu f$ |
| $DJ_4$ to all other electrodes except $DJ_3$ | 2.5 $\mu\mu f$ |

Deflection polarity

Positive voltage on $DJ_1$ deflects beam toward pin No. 4

Positive voltage on $DJ_3$ deflects beam toward pin No. 1

Geometry (measured under typical operating conditions and PDA ratio of 6)

| | |
|---|---|
| Minimum useful scan $DJ_1$-$DJ_2$ | 10 cm |
| Minimum useful scan $DJ_3$-$DJ_4$ | 6 cm |
| Trace orthogonality | 90°±1° |
| Centering of undeflected spot with respect to geometric center (deflection electrodes connected to grid No. 5) | 5 mm |
| Raster distortion | 1.7% Max. |

## MAXIMUM RATINGS (all measurements taken with respect to cathode):

| | |
|---|---|
| Post-accelerator voltage | 24,000 volts Max. |
| Accelerator and deflection system | |
| (1st anode, 2nd anode, deflection plates, deflection plate shields, isolation shield, lower helix) | 4200 volts Max. |
| Focus electrode | |
| Voltage range | 0 to 1200 volts |
| Maximum current to focus electrode | $\pm 10\ \mu a$ |
| Peak voltage between electrodes | |
| Plate to plate | 500 volts Max. |
| Plate to all other electrodes in the accelerator and deflection system | 500 volts Max. |
| Between any two electrodes in the accelerator and deflection system | 500 volts Max. |
| Grid No. 1 voltage | |
| Negative bias value | 200 volts Max. |
| Positive bias value | 0 volts Max. |
| Peak positive bias value | 2 volts Max. |
| Peak heater-cathode voltage | |
| Heater negative with respect to cathode | 125 volts Max. |
| Heater positive with respect to cathode | 125 volts Max. |
| Maximum average electrode power dissipation | |
| 1st anode | 6 watts Max. |

## TYPICAL OPERATING CONDITIONS (all measurements taken with respect to cathode):

| Electrode designation | Symbol | |
|---|---|---|
| Post-accelerator voltage | Epa | 24,000 volts DC |
| Lower helix voltage | Elh | 3750 to 4250 volts DC[1] |
| Isolation shield voltage | Eg6 | |
| $DJ_3$-$DJ_4$ deflection shield voltage | Es1 | |
| Average of deflection plates | Edp | 4000 volts DC |
| Accelerator voltage | | |
| Grid No. 4 (astigmatism) | Eg4 | 3750 to 4250 volts DC |
| Grid No. 2 (1st anode) | Eg2 | 4000 volts DC |
| Grid No. 3 voltage (focus) | Eg3 | 340 to 850 volts DC |
| Grid No. 1 voltage (control) | Eg1 | —100 to —160 volts DC (cutoff) |

Deflection factors (nominal)

| | |
|---|---|
| $DJ_1$-$DJ_2$ | 74 volts/cm |
| $DJ_3$-$DJ_4$ | 45 volts/cm |

Useful scan[2]

| | |
|---|---|
| $DJ_1$-$DJ_2$ | 10 cm |
| $DJ_3$-$DJ_4$ | 6 cm |

## DESIGN RANGES:

Minimum scan (PDA ratio 6)[2]

| | |
|---|---|
| $DJ_1$-$DJ_2$ | 10 cm |
| $DJ_3$-$DJ_4$ | 6 cm |

Deflection factors (PDA ratio 6)

| | |
|---|---|
| $DJ_1$-$DJ_2$ | 17.3 to 19.7 v/cm/kv of Edp |
| $DJ_3$-$DJ_4$ | 10 to 12.5 v/cm/kv of Edp |
| Grid No. 1 voltage for extinction of undeflected focused spot | 4% of Edp |
| Focus electrode voltage (recommended range) | 8.5% to 21% of Edp |

## NOTES:

1. Lower helix, isolation shield, and $DJ_3$-$DJ_4$ deflection shields are connected internally. Pattern distortion minimal with proper potential.

2. The deflection plates intercept part of the electron beam near the edge of the scan.

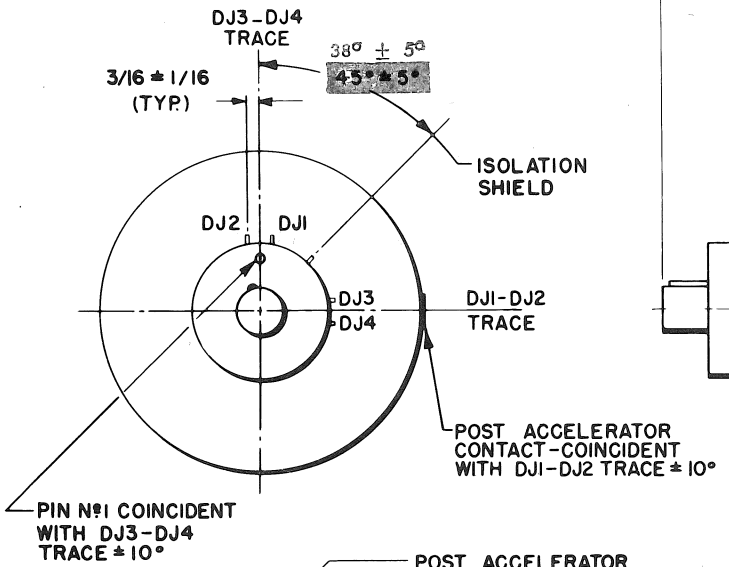


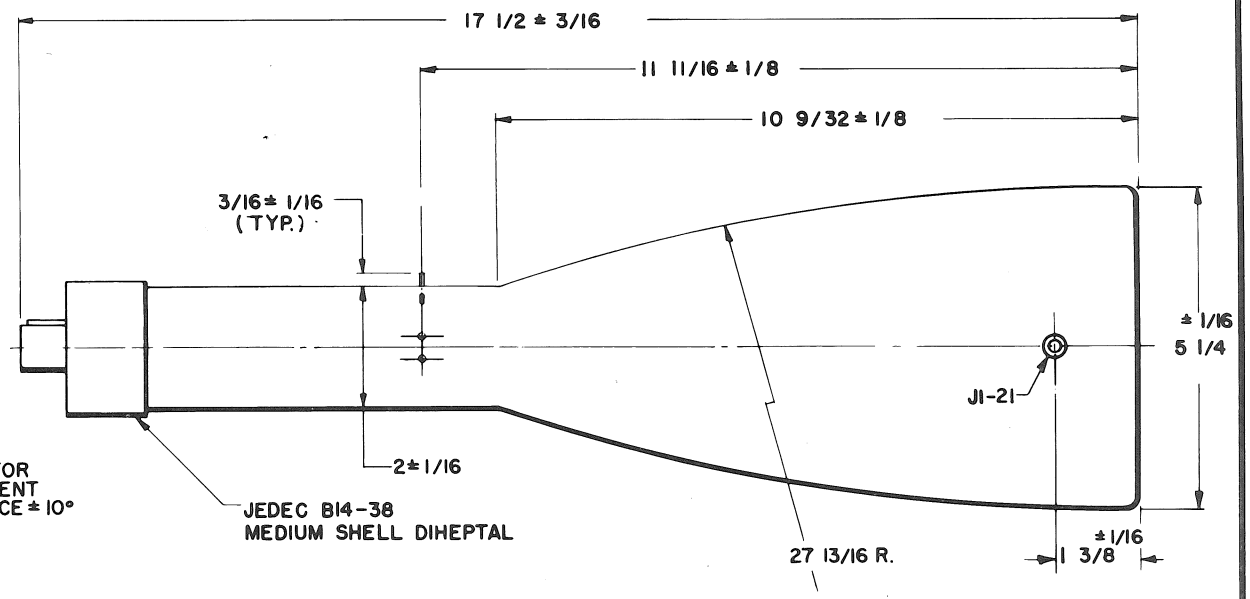


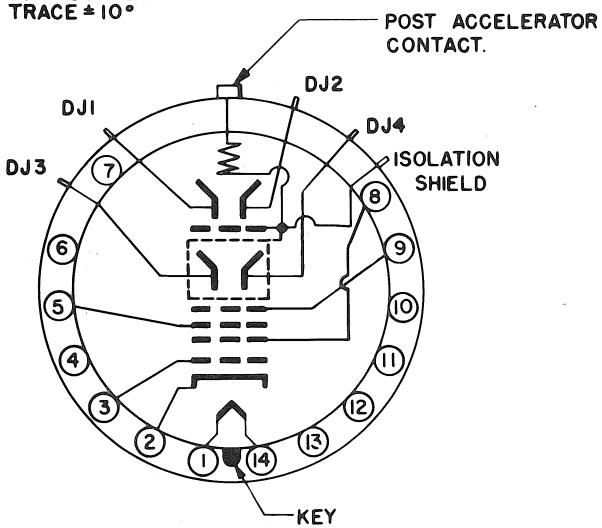


BASE SCHEMATIC

## BASE CONNECTIONS

| | |
|---|---|
| 1, 14 | HEATER |
| 2 | CATHODE |
| 3 | GRID Nº 1 |
| 4,6,7, 10,11,12,13. | N.C. |
| 5 | GRID Nº 3 (FOCUS) |
| 8 | GRID Nº 2 (FIRST ANODE) |
| 9 | GRID Nº 4 (ASTIGMATISM) |

| MARK | DATE | DESCRIPTION | BY | APPR |
|---|---|---|---|---|
| | | CATHODE-RAY TUBE DIVISION<br>TEKTRONIX, INC.<br>PORTLAND, OREGON, U.S.A. | | |
| | | TUBE TYPE: T 507 | DATE: 1/25/61<br>MOD. | |