Copyright © 1971 by Tektronix, Inc., Beaverton, Oregon. Printed in the United States of America. All rights reserved. Contents of this publication may not be reproduced in any form without permission of the copyright owner.

U.S.A. and foreign Tektronix products covered by U.S. and foreign patents and/or patents pending.

TEKTRONIX®

5A24N

INSTRUCTION MANUAL

Tektronix, Inc.
P.O. Box 500
~~Beaverton, Oregon~~ 97077

070-1145-00

Serial Number _____

571

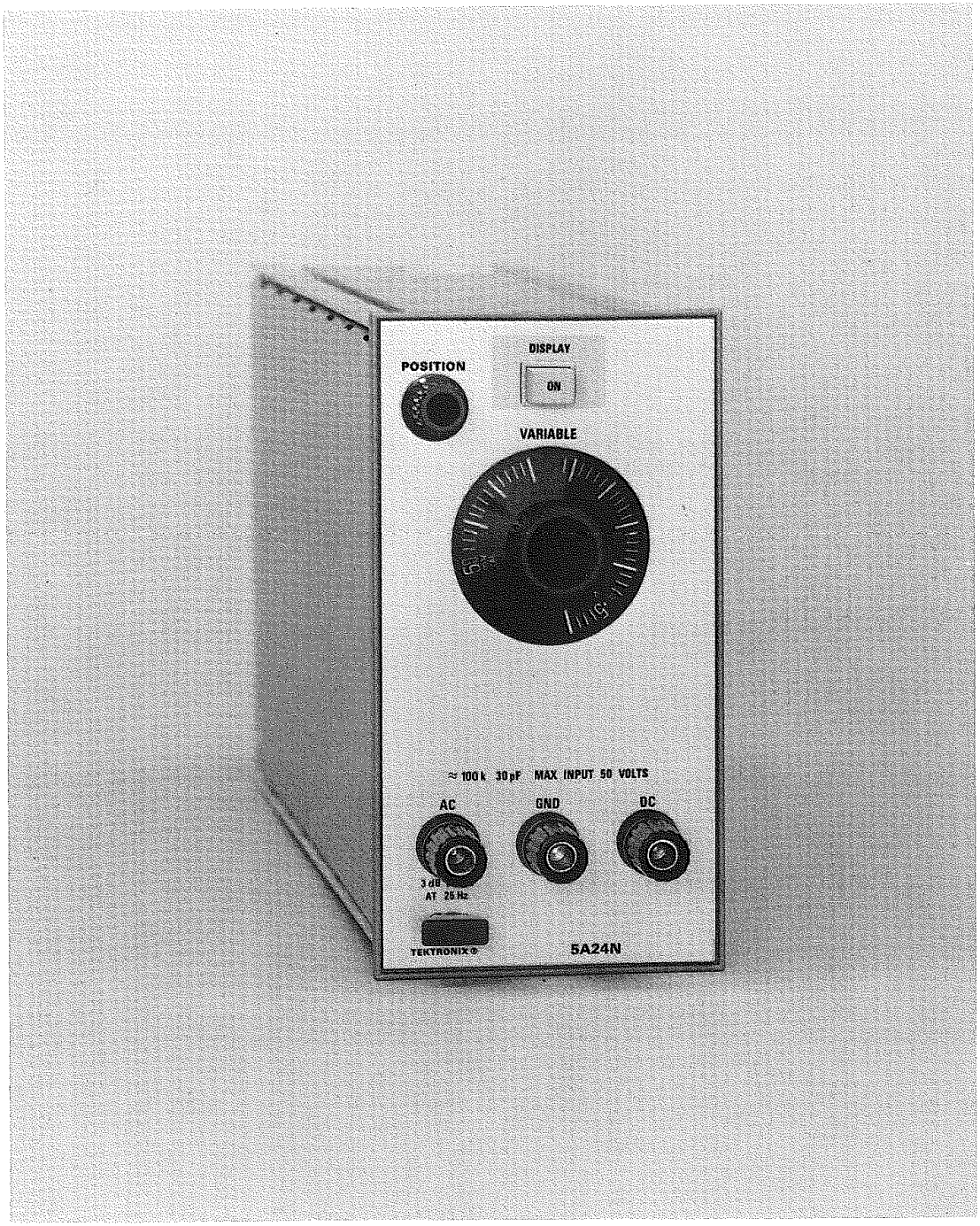

Fig. 1. 5A24N utility plug-in unit.

5A24N SPECIFICATION

General

The 5A24N is a utility plug-in designed for use with Tektronix 5100-series oscilloscopes. It provides simple access to either the vertical or horizontal deflection system in the mainframe (50 millivolt/division deflection factor) for signal applications. In addition, the unit meets all mainframe requirements with respect to vertical mode switching, CRT-beam positioning, time-base trigger pickoff, and power supply connections, thus forming the basis of a custom-built plug-in unit.

In this manual the word Volts/Div or division refers to major graticule division.

TABLE 1

ELECTRICAL CHARACTERISTICS

Characteristic	Performance Requirement	Supplemental Information
Deflection Factor		
Calibrated	50 millivolts/division	
Accuracy	Within −5% calibrated.	
Variable Attenuator Range	50 millivolts/division to at least 1 volt/division.	
Frequency Response		
Bandwidth (8 Div Reference)		
DC (Direct) Coupled	DC to at least 2 megahertz with calibrated deflection factor, decreasing to DC to 200 kilohertz at mid-attenuator range.	
AC (Capacitive) Coupled	25 hertz to at least 2 megahertz with calibrated deflection factor, decreasing to 25 hertz to 200 kilohertz at mid-attenuator range.	
Inputs		
Input R and C		100 kilohms, paralleled by ≈ 30 picofarads.
Maximum Safe Input Voltage		50 volts (DC + peak AC)
Position Range		At least + and − 10 divisions from graticule center.
Triggering Sensitivity		Associated time-base unit will trigger on 1 division or more of displayed signal.

TABLE 2

ENVIRONMENTAL CHARACTERISTICS

Characteristic	Performance Requirement
Temperature	
Operating Range	0°C to +50°C.
Non-operating Range	−40°C to +70°C.
Altitude	
Operating Range	To 15,000 feet.
Non-operating Range	To 50,000 feet.
Vibration Range	To 0.015 inch peak-to-peak displacement at 50 cycles per second.
Shock Range	To 30 g's, 1/2 sine, 11 milliseconds duration.

OPERATING INSTRUCTIONS

General

The 5A24N operates with a Tektronix 5100-series oscilloscope, and is ready for use as it is received. It can be installed in any compartment of the 5100-series oscilloscope. To install, align the upper and lower rails of the 5A24N with the plug-in compartment tracks and fully insert it (the plug-in panel must be flush with the oscilloscope panel). To remove, pull the release latch to disengage the 5A24N from the oscilloscope.

Controls and Connectors

DISPLAY ON	Applies and removes logic levels to the oscilloscope system to enable or disable plug-in operation. Switch is functional only when plug-in is operated in one of the vertical compartments.
POSITION	Positions display.
VARIABLE	Provides uncalibrated, continuously variable deflection factor from 50 millivolts/division to at least 1 volt/division. A calibrated deflection factor of 50 millivolts/division is provided when the control is fully clockwise.
Input Connectors	AC, GND, DC: Five-way binding posts for application of external voltage signals, providing AC or DC input coupling and a ground connection.

Input Coupling

Apply the signal to the connector associated with the coupling desired. DC coupling can be used for most applications. However, if the DC component of the signal is much larger than the AC component, AC coupling will probably provide a better display. DC coupling should be used to display AC signals below about 25 hertz as they will be attenuated when AC coupled.

When AC coupled, the DC component is blocked by a capacitor. The low-frequency response when AC coupled is about 25 hertz (−3 dB point). Therefore, some low-frequency attenuation can be expected near this frequency limit. Distortion will also appear in square waves which have low-frequency components.

The ground connector permits a ground connection between the signal source and the 5A24N. An internal ground provides a zero reference to the input when no signals are applied.

Deflection Factor

The amount of trace deflection produced by a signal is determined by the signal amplitude and the setting of the VARIABLE control. When the VARIABLE control is fully clockwise, a calibrated deflection factor is provided. If a calibrated deflection factor other than 50 mV/division is desired, change the input divider ratio.

NOTE

50 millivolts/division is the highest input sensitivity that can be achieved, because no amplification is involved.

A provision is made on the circuit board for adding a shunt resistor to change the input divider ratio. Also, the value of R3 can be changed if necessary. The correct ratio is easy to determine. Since the deflection factor is always 50 millivolts/division at the base of Q8, select a ratio that will provide a 50-millivolt drop across the shunt resistor when one unit of the desired units per division is applied to the input. For example, to establish a calibrated deflection factor of one volt/division, R3 must drop 950 millivolts while the shunt resistor drops 50 millivolts. Thus R3 must be 19 times as large in value as the shunt resistor.

Custom Circuits

Solder pads are provided on the circuit board to allow construction of custom circuitry. Maximum plug-in unit load is normally 80 milliamperes from the +30-volt and −30-volt supplies, and 130 milliamperes from the +5-volt supply. The power dissipated by the entire plug-in should not exceed 6.5 watts.

CIRCUIT OPERATION

Emitter Follower Stage

Emitter follower Q8 isolates the input circuit from the loading of the output and the trigger signal amplifier. VARIABLE control R1 provides continuously variable attenuation of the input signal, as well as providing a calibrated deflection factor when fully clockwise. Input sensitivity at the base of Q8 is 50 millivolts/division. A provision is made to permit changing the input divider ratio to establish new calibrated deflection factors. R5, DC Bal, is adjusted to prevent trace shift when the VARIABLE control is rotated. The output is passed through CR13 to contacts A13 and A7 of the plug-in connector. R35, POSITION, permits changing the DC level of the other output line (contact B13), thus changing the quiescent display position.

Trigger Signal Amplifier

Q8 and Q20 form a non-inverting operational amplifier which provides an approximate X4 amplification of the displayed signal, which is sufficient to meet the sensitivity requirements of the associated time-base plug-in triggering circuits. Q28 provides an emitter follower output.

MAINTENANCE

The 5100-series Oscilloscope System manual contains information for general maintenance of this instrument, including preventive maintenance, component identification and replacement, etc.

REPACKAGING FOR SHIPMENT

If the Tektronix instrument is to be shipped to a Tektronix Service Center for service or repair, attach a tag showing: owner (with address) and the name of an individual at your firm that can be contacted, complete instrument serial number and a description of the service required.

Save and re-use the package in which your instrument was shipped. If the original packaging is unfit for use or not available, repackage the instrument as follows:

1. Obtain a carton of corrugated cardboard having inside dimensions of no less than six inches more than the instrument dimensions; this will allow for cushioning. Refer to the following table for carton test strength requirements.

2. Surround the instrument with polyethylene sheeting to protect the finish of the instrument.

3. Cushion the instrument on all sides by tightly packing dunnage or urethane foam between carton and instrument, allowing three inches on all sides.

4. Seal carton with shipping tape or industrial stapler.

SHIPPING CARTON TEST STRENGTH

Gross Weight (lb)	Carton Test Strength (lb)
0-10	200
10-30	275
30-120	375
120-140	500
140-160	600

ADJUSTMENT

DC Balance

If the internal DC Balance control is not properly adjusted, the CRT zero reference point (trace or spot) may shift as the VARIABLE control is rotated. With no signals applied to the input, turn the VARIABLE control throughout its range while adjusting the DC Balance control for minimum shift.

REPLACEABLE ELECTRICAL PARTS

PARTS ORDERING INFORMATION

Replacement parts are available from or through your local Tektronix, Inc. Field Office or representative.

Changes to Tektronix instruments are sometimes made to accommodate improved components as they become available, and to give you the benefit of the latest circuit improvements developed in our engineering department. It is therefore important, when ordering parts, to include the following information in your order: Part number, instrument type or number, serial number, and modification number if applicable.

If a part you have ordered has been replaced with a new or improved part, your local Tektronix, Inc. Field Office or representative will contact you concerning any change in part number.

Change information, if any, is located at the rear of this manual.

SPECIAL NOTES AND SYMBOLS

X000	Part first added at this serial number
00X	Part removed after this serial number

ITEM NAME

In the Parts List, an Item Name is separated from the description by a colon (:). Because of space limitations, an Item Name may sometimes appear as incomplete. For further Item Name identification, the U.S. Federal Cataloging Handbook H6-1 can be utilized where possible.

ABBREVIATIONS

ACTR	ACTUATOR	PLSTC	PLASTIC
ASSY	ASSEMBLY	QTZ	QUARTZ
CAP	CAPACITOR	RECP	RECEPTACLE
CER	CERAMIC	RES	RESISTOR
CKT	CIRCUIT	RF	RADIO FREQUENCY
COMP	COMPOSITION	SEL	SELECTED
CONN	CONNECTOR	SEMICOND	SEMICONDUCTOR
ELCTLT	ELECTROLYTIC	SENS	SENSITIVE
ELEC	ELECTRICAL	VAR	VARIABLE
INCAND	INCANDESCENT	WW	WIREWOUND
LED	LIGHT EMITTING DIODE	XFMR	TRANSFORMER
NONWIR	NON WIREWOUND	XTAL	CRYSTAL

CROSS INDEX—MFR. CODE NUMBER TO MANUFACTURER

Mfr. Code	Manufacturer	Address	City, State, Zip
01121	ALLEN-BRADLEY COMPANY	1201 2ND STREET SOUTH	MILWAUKEE, WI 53204
04099	CAPCO, INC.	FORESIGHT INDUSTRIAL PARK, PO BOX 2164	GRAND JUNCTION, CO 81501
07263	FAIRCHILD SEMICONDUCTOR, A DIV. OF FAIRCHILD CAMERA AND INSTRUMENT CORP.	464 ELLIS STREET	MOUNTAIN VIEW, CA 94042
07910	TELEDYNE SEMICONDUCTOR	12515 CHADRON AVE.	HAWTHORNE, CA 90250
08806	GENERAL ELECTRIC CO., MINIATURE LAMP PRODUCTS DEPARTMENT	NELA PARK	CLEVELAND, OH 44112
71450	CTS CORP.	1142 W. BEARDSLEY AVE.	ELKHART, IN 46514
72982	ERIE TECHNOLOGICAL PRODUCTS, INC.	644 W. 12TH ST.	ERIE, PA 16512
80009	TEKTRONIX, INC.	P. O. BOX 500	BEAVERTON, OR 97077
91637	DALE ELECTRONICS, INC.	P. O. BOX 609	COLUMBUS, NE 68601

Ckt No.	Tektronix Part No.	Serial/Model No. Eff	Dscont	Name & Description	Mfr Code	Mfr Part Number
A1	670-1564-00			CKT BOARD ASSY:MAIN	80009	670-1564-00
C1	285-0587-00			CAP.,FXD,PLSTC:0.1UF,20%,600V	04099	MR104-6-20
C11	281-0504-00	XB030000		CAP.,FXD,CER DI:10PF,+/-1PF,500V	72982	301-055C0G0100F
CR7	152-0185-00			SEMICOND DEVICE:SILICON,40PIV,150MA	07910	1N4152
CR8	152-0185-00			SEMICOND DEVICE:SILICON,40PIV,150MA	07910	1N4152
CR13	152-0185-00			SEMICOND DEVICE:SILICON,40PIV,150MA	07910	1N4152
CR16	152-0185-00			SEMICOND DEVICE:SILICON,40PIV,150MA	07910	1N4152
DS21	150-0111-00			LAMP,GLOW:NEON,1.2MA	08806	2AC-AT
Q8	151-0192-00			TRANSISTOR:SILICON,NPN,SEL FROM MPS6521	80009	151-0192-00
Q20	151-0342-00			TRANSISTOR:SILICON,PNP	80009	151-0342-00
Q28	151-0341-00			TRANSISTOR:SILICON,NPN	07263	S040065
R1	311-1099-00			RES.,VAR,NONWIR:100K OHM,0.5W	01121	WA1G040S104AZ
R2	315-0751-00			RES.,FXD,CMPSN:750 OHM,5%,0.25W	01121	CB7515
R3	316-0103-00			RES.,FXD,CMPSN:10K OHM,10%,0.25W	01121	CB1031
R5	311-1199-00			RES.,VAR,NONWIR:10K OHM,30%,0.25W	71450	201-YA5543
R6	316-0275-00			RES.,FXD,CMPSN:2.7M OHM,10%,0.25W	01121	CB2751
R8	321-0389-00			RES.,FXD,FILM:110K OHM,1%,0.125W	91637	MFF1816G11002F
R9	315-0183-00			RES.,FXD,CMPSN:18K OHM,5%,0.25W	01121	CB1835
R11	315-0562-00			RES.,FXD,CMPSN:5.6K OHM,5%,0.25W	01121	CB5625
R13	321-0338-00			RES.,FXD,FILM:32.4K OHM,1%,0.125W	91637	MFF1816G32401F
R16	321-0364-00			RES.,FXD,FILM:60.4K OHM,1%,0.125W	91637	MFF1816G60401F
R20	316-0333-00			RES.,FXD,CMPSN:33K OHM,10%,0.25W	01121	CB3331
R21	302-0184-00			RES.,FXD,CMPSN:180K OHM,10%,0.50W	01121	EB1841
R28	316-0153-00			RES.,FXD,CMPSN:15K OHM,10%,0.25W	01121	CB1531
R30	316-0181-00			RES.,FXD,CMPSN:180 OHM,10%,0.25W	01121	CB1811
R35	311-1220-00			RES.,VAR,NONWIR:20K OHM,30%,0.25W	71450	200-YA5547
R36	316-0563-00			RES.,FXD,CMPSN:56K OHM,10%,0.25W	01121	CB5631
R38	315-0102-00			RES.,FXD,CMPSN:1K OHM,5%,0.25W	01121	CB1025
S21	260-1209-00			SWITCH,PUSH:4PDT	80009	260-1209-00

REPLACEABLE MECHANICAL PARTS

PARTS ORDERING INFORMATION

Replacement parts are available from or through your local Tektronix, Inc. Field Office or representative.

Changes to Tektronix instruments are sometimes made to accommodate improved components as they become available, and to give you the benefit of the latest circuit improvements developed in our engineering department. It is therefore important, when ordering parts, to include the following information in your order: Part number, instrument type or number, serial number, and modification number if applicable.

If a part you have ordered has been replaced with a new or improved part, your local Tektronix, Inc. Field Office or representative will contact you concerning any change in part number.

Change information, if any, is located at the rear of this manual.

SPECIAL NOTES AND SYMBOLS

X000	Part first added at this serial number
00X	Part removed after this serial number

FIGURE AND INDEX NUMBERS

Items in this section are referenced by figure and index numbers to the illustrations.

INDENTATION SYSTEM

This mechanical parts list is indented to indicate item relationships. Following is an example of the indentation system used in the description column.

1 2 3 4 5 Name & Description

Assembly and/or Component
Attaching parts for Assembly and/or Component
- - - * - - -
Detail Part of Assembly and/or Component
Attaching parts for Detail Part
- - - * - - -
Parts of Detail Part
Attaching parts for Parts of Detail Part
- - - * - - -

Attaching Parts always appear in the same indentation as the item it mounts, while the detail parts are indented to the right. Indented items are part of, and included with, the next higher indentation. The separation symbol - - - * - - - indicates the end of attaching parts.

Attaching parts must be purchased separately, unless otherwise specified.

ITEM NAME

In the Parts List, an Item Name is separated from the description by a colon (:). Because of space limitations, an Item Name may sometimes appear as incomplete. For further Item Name identification, the U.S. Federal Cataloging Handbook H6-1 can be utilized where possible.

ABBREVIATIONS

"	INCH
#	NUMBER SIZE
ACTR	ACTUATOR
ADPTR	ADAPTER
ALIGN	ALIGNMENT
AL	ALUMINUM
ASSEM	ASSEMBLED
ASSY	ASSEMBLY
ATTEN	ATTENUATOR
AWG	AMERICAN WIRE GAGE
BD	BOARD
BRKT	BRACKET
BRS	BRASS
BRZ	BRONZE
BSHG	BUSHING
CAB	CABINET
CAP	CAPACITOR
CER	CERAMIC
CHAS	CHASSIS
CKT	CIRCUIT
COMP	COMPOSITION
CONN	CONNECTOR
COV	COVER
CPLG	COUPLING
CRT	CATHODE RAY TUBE
DEG	DEGREE
DWR	DRAWER
ELCTRN	ELECTRON
ELEC	ELECTRICAL
ELCTLT	ELECTROLYTIC
ELEM	ELEMENT
EPL	ELECTRICAL PARTS LIST
EQPT	EQUIPMENT
EXT	EXTERNAL
FIL	FILLISTER HEAD
FLEX	FLEXIBLE
FLH	FLAT HEAD
FLTR	FILTER
FR	FRAME or FRONT
FSTNR	FASTENER
FT	FOOT
FXD	FIXED
GSKT	GASKET
HDL	HANDLE
HEX	HEXAGON
HEX HD	HEXAGONAL HEAD
HEX SOC	HEXAGONAL SOCKET
HLCPS	HELICAL COMPRESSION
HLEXT	HELICAL EXTENSION
HV	HIGH VOLTAGE
IC	INTEGRATED CIRCUIT
ID	INSIDE DIAMETER
IDENT	IDENTIFICATION
IMPLR	IMPELLER
IN	INCH
INCAND	INCANDESCENT
INSUL	INSULATOR
INTL	INTERNAL
LPHLDR	LAMPHOLDER
MACH	MACHINE
MECH	MECHANICAL
MTG	MOUNTING
NIP	NIPPLE
NON WIRE	NOT WIRE WOUND
OBD	ORDER BY DESCRIPTION
OD	OUTSIDE DIAMETER
OVH	OVAL HEAD
PH BRZ	PHOSPHOR BRONZE
PL	PLAIN or PLATE
PLSTC	PLASTIC
PN	PART NUMBER
PNH	PAN HEAD
PWR	POWER
RCPT	RECEPTACLE
RES	RESISTOR
RGD	RIGID
RLF	RELIEF
RTNR	RETAINER
SCH	SOCKET HEAD
SCOPE	OSCILLOSCOPE
SCR	SCREW
SE	SINGLE END
SECT	SECTION
SEMICOND	SEMICONDUCTOR
SHLD	SHIELD
SHLDR	SHOULDERED
SKT	SOCKET
SL	SLIDE
SLFLKG	SELF-LOCKING
SLVG	SLEEVING
SPR	SPRING
SQ	SQUARE
SST	STAINLESS STEEL
STL	STEEL
SW	SWITCH
T	TUBE
TERM	TERMINAL
THD	THREAD
THK	THICK
TNSN	TENSION
TPG	TAPPING
TRH	TRUSS HEAD
V	VOLTAGE
VAR	VARIABLE
W/	WITH
WSHR	WASHER
XFMR	TRANSFORMER
XSTR	TRANSISTOR

CROSS INDEX—MFR. CODE NUMBER TO MANUFACTURER

Mfr. Code	Manufacturer	Address	City, State, Zip
01121	ALLEN-BRADLEY COMPANY	1201 2ND STREET SOUTH	MILWAUKEE, WI 53204
04099	CAPCO, INC.	FORESIGHT INDUSTRIAL PARK, PO BOX 2164	GRAND JUNCTION, CO 81501
07263	FAIRCHILD SEMICONDUCTOR, A DIV. OF FAIRCHILD CAMERA AND INSTRUMENT CORP.	464 ELLIS STREET	MOUNTAIN VIEW, CA 94042
07910	TELEDYNE SEMICONDUCTOR	12515 CHADRON AVE.	HAWTHORNE, CA 90250
08806	GENERAL ELECTRIC CO., MINIATURE LAMP PRODUCTS DEPARTMENT	NELA PARK	CLEVELAND, OH 44112
71450	CTS CORP.	1142 W. BEARDSLEY AVE.	ELKHART, IN 46514
72982	ERIE TECHNOLOGICAL PRODUCTS, INC.	644 W. 12TH ST.	ERIE, PA 16512
80009	TEKTRONIX, INC.	P. O. BOX 500	BEAVERTON, OR 97077
91637	DALE ELECTRONICS, INC.	P. O. BOX 609	COLUMBUS, NE 68601

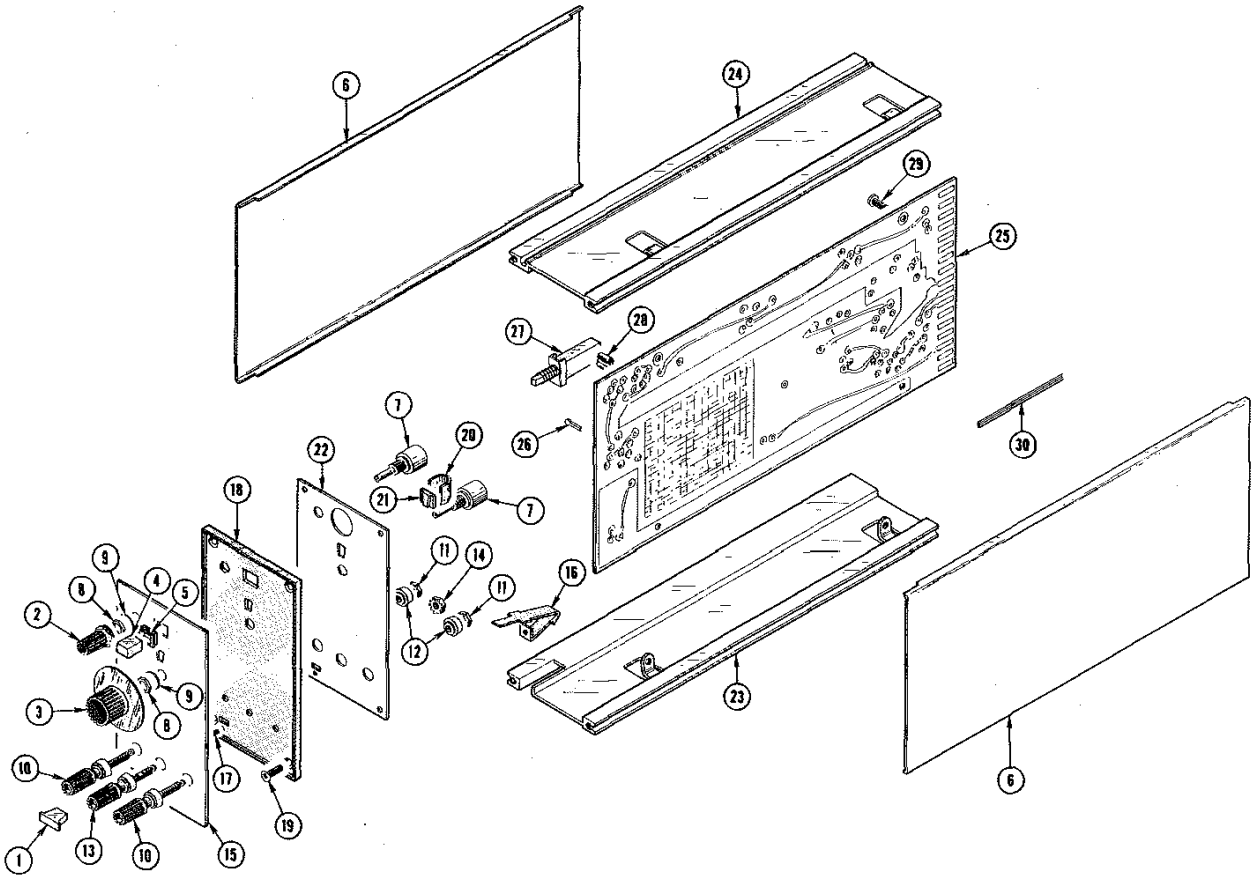
6
24
29
25
27
28
7
20
26
22
21
7
18
11
14
16
9
4
8
5
11
2
12
9
3
8
23
10
17
19
1
13
10
15
6
30

Fig. & Index No.	Tektronix Part No.	Serial/Model No. Eff	Dscont	Qty	1 2 3 4 5 Name & Description	Mfr Code	Mfr Part Number
1-1	366-1286-00	B010100	B029999	1	KNOB:LATCH,GRAY	80009	366-1286-00
	366-1286-03	B030000		1	KNOB:LATCH,SILVER	80009	366-1286-03
	214-1840-00	XB030000		1	PIN,KNOB SECRG:0.094 OD X 0.120 INCH LONG	80009	214-1840-00
-2	366-0494-00			1	KNOB:GRAY	80009	366-0494-00
	213-0153-00			1	. SETSCREW:5-40 X 0.125 INCH,HEX SOC STL	74445	OBD
-3	366-1347-00			1	KNOB:VARIABLE	80009	366-1347-00
	213-0153-00			1	. SETSCREW:5-40 X 0.125 INCH,HEX SOC STL	74445	OBD
-4	366-1257-14			1	PUSH BUTTON:GRAY--ON	80009	366-1257-14
-5	426-0681-00			1	FR,PUSH BUTTON:GRAY PLASTIC	80009	426-0681-00
-6	337-1399-00			2	SHLD,ELECTRICAL:SIDE	80009	337-1399-00
-7	----- -----			2	RESISTOR,VARIABLE:		
					(ATTACHING PARTS)		
-8	210-0583-00			2	NUT,PLAIN,HEX.:0.25-32 X 0.312 INCH,BRS	73743	2X20224-402
-9	210-0940-00			1	WASHER,FLAT:0.25 ID X 0.375 INCH OD,STL	79807	OBD
	210-0046-00			1	WASHER,LOCK:INTL,0.26 ID X 0.40" OD,STL	78189	1214-05-00-0541C
					- - - * - - -		
-10	129-0064-00			2	POST,BDG,ELEC:CHARCOAL,5-WAY MINIATURE	58474	BINP BB10167G13T
					(ATTACHING PARTS)		
-11	210-0457-00			1	NUT,PLAIN,EXT W:6-32 X 0.312 INCH,STL	83385	OBD
-12	358-0181-00			1	INSULATOR,BSHG:CHARCOAL	58474	BB10166G13BX
					- - - * - - -		
-13	129-0064-00			1	POST,BDG,ELEC:CHARCOAL,5-WAY MINIATURE	58474	BINP BB10167G13T
					(ATTACHING PARTS)		
-14	210-0457-00			1	NUT,PLAIN,EXT W:6-32 X 0.312 INCH,STL	83385	OBD
					- - - * - - -		
-15	333-1454-00			1	PANEL,FRONT:	80009	333-1454-00
-16	214-1513-00	B010100	B029999	1	LCH,PLUG-IN RET:	80009	214-1513-00
	214-1513-01	B030000		1	LCH,PLUG-IN RET:	80009	214-1513-01
					(ATTACHING PARTS)		
-17	213-0254-00			1	SCR,TPG,THD CTG:2-56X0.25"100 DEG,FLH STL	45722	OBD
-18	386-2018-00			1	SUBPANEL,FRONT:	80009	386-2018-00
					(ATTACHING PARTS)		
-19	213-0229-00			4	SCR,TPG,THD FOR:6-20 X0.375"100 DEG,FLH STL	83385	OBD
					- - - * - - -		
-20	337-1430-00			1	SHIELD,LIGHT:LAMP	80009	337-1430-00
-21	136-0429-00			1	RETAINER,LAMP:CAM SWITCH	80009	136-0429-00
-22	337-1468-00			1	SHLD,ELECTRICAL:		
-23	426-0724-00			1	FR SECT,PLUG-IN:BOTTOM	80009	426-0724-00
-24	426-0725-00			1	FR SECT,PLUG-IN:TOP	80009	426-0725-00
-25	----- -----			1	CIRCUIT CARD ASSY:MAIN(SEE A1 EPL)		
-26	214-0579-00			2	. TERM.,TEST PT:0.40 INCH LONG	80009	214-0579-00
-27	260-1209-00			1	. SWITCH,PUSH:4PDT	80009	260-1209-00
-28	361-0383-00			2	. SPACER,PB SW:CHARCOAL,0.33 INCH LONG	80009	361-0383-00
					(ATTACHING PART FOR CKT BOARD)		
-29	213-0146-00			4	SCR,TPG,THD FOR:6-20 X 0.313 INCH,PNH STL	83385	OBD
					- - - * - - -		
-30	175-0826-00			FT	WIRE,ELECTRICAL:3 WIRE RIBBON,0.250 L	80009	175-0826-00

STANDARD ACCESSORIES

	070-1145-00			1	MANUAL,TECH:INSTRUCTION	80009	070-1145-00

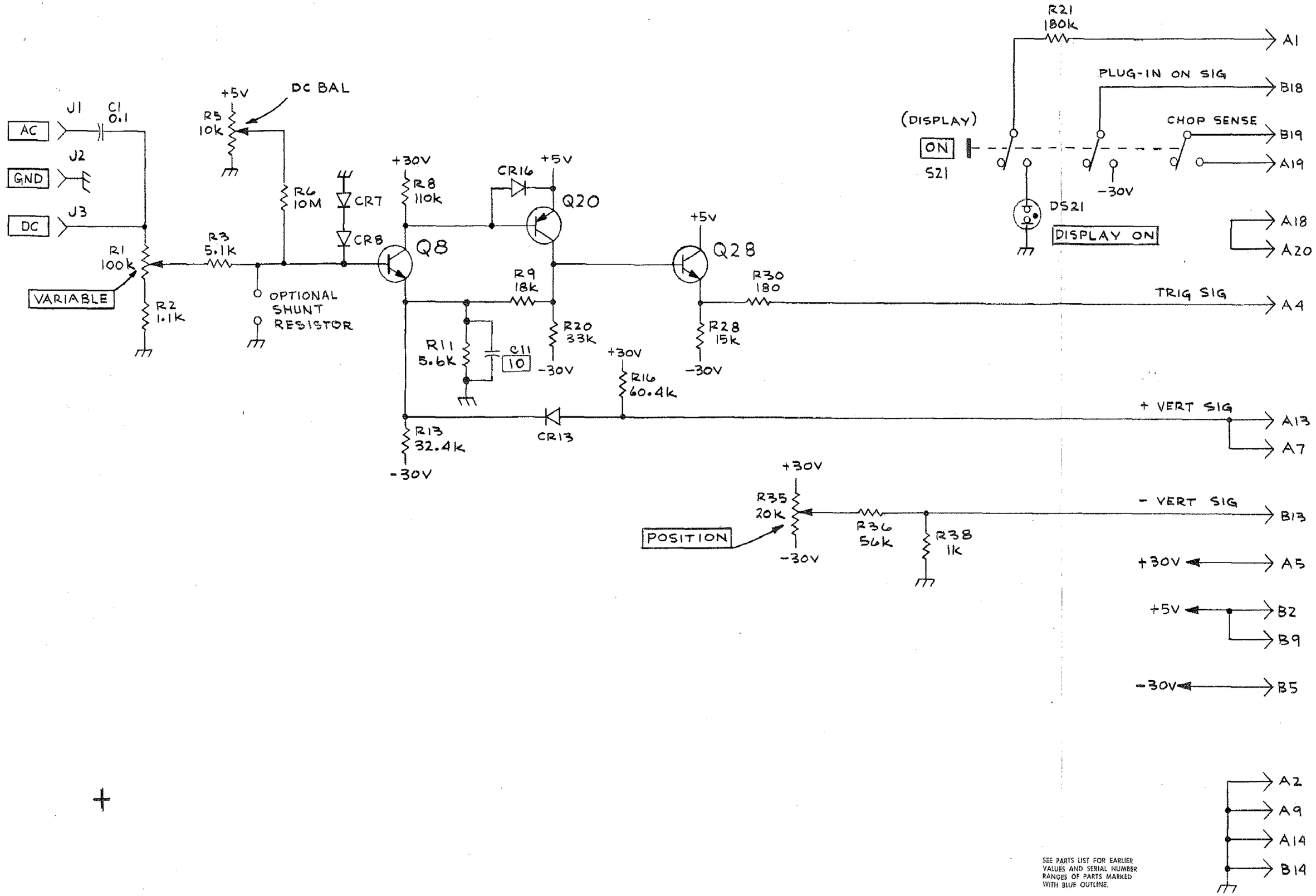

SEE PARTS LIST FOR EARLIER VALUES AND SERIAL NUMBER RANGES OF PARTS MARKED WITH BLUE OUTLINE.

5A24N PLUG-IN

B1

REV. JULY, 1974

DEH

MANUAL CHANGE INFORMATION

At Tektronix, we continually strive to keep up with latest electronic developments by adding circuit and component improvements to our instruments as soon as they are developed and tested.

Sometimes, due to printing and shipping requirements, we can't get these changes immediately into printed manuals. Hence, your manual may contain new change information on following pages.

A single change may affect several sections. Since the change information sheets are carried in the manual until all changes are permanently entered, some duplication may occur. If no such change pages appear following this page, your manual is correct as printed.

SERVICE NOTE

Because of the universal parts procurement problem, some electrical parts in your instrument may be different from those described in the Replaceable Electrical Parts List. The parts used will in no way alter or compromise the performance or reliability of this instrument. They are installed when necessary to ensure prompt delivery to the customer. Order replacement parts from the Replaceable Electrical Parts List.

CALIBRATION TEST EQUIPMENT REPLACEMENT

Calibration Test Equipment Chart

This chart compares TM 500 product performance to that of older Tektronix equipment. Only those characteristics where significant specification differences occur, are listed. In some cases the new instrument may not be a total functional replacement. Additional support instrumentation may be needed or a change in calibration procedure may be necessary.

Comparison of Main Characteristics

DM 501 replaces 7D13		
PG 501 replaces 107	PG 501 - Risetime less than 3.5 ns into 50 Ω.	107 - Risetime less than 3.0 ns into 50 Ω.
108	PG 501 - 5 V output pulse; 3.5 ns Risetime.	108 - 10 V output pulse; 1 ns Risetime.
111	PG 501 - Risetime less than 3.5 ns; 8 ns Pretrigger pulse delay.	111 - Risetime 0.5 ns; 30 to 250 ns Pretrigger Pulse delay.
114	PG 501 - ±5 V output.	114 - ±10 V output. Short proof output.
115	PG 501 - Does not have Paired, Burst, Gated, or Delayed pulse mode; ±5 V dc Offset. Has ±5 V output.	115 - Paired, Burst, Gated, and Delayed pulse mode; ±10 V output. Short-proof output.
PG 502 replaces 107		
108	PG 502 - 5 V output	108 - 10 V output.
111	PG 502 - Risetime less than 1 ns; 10 ns Pretrigger pulse delay.	111 - Risetime 0.5 ns; 30 to 250 ns Pretrigger pulse delay.
114	PG 502 - ±5 V output	114 - ±10 V output. Short proof output.
115	PG 502 - Does not have Paired, Burst, Gated, Delayed & Undelayed pulse mode; Has ±5 V output.	115 - Paired, Burst, Gated, Delayed & Undelayed pulse mode; ±10 V output. Short-proof output.
2101	PG 502 - Does not have Paired or Delayed pulse. Has ±5 V output.	2101 - Paired and Delayed pulse; 10 V output.
PG 506 replaces 106	PG 506 - Positive-going trigger output signal at least 1 V; High Amplitude output, 60 V.	106 - Positive and Negative-going trigger output signal, 50 ns and 1 V; High Amplitude output, 100 V.
067-0502-01	PG 506 - Does not have chopped feature.	0502-01 - Comparator output can be alternately chopped to a reference voltage.
SG 503 replaces 190, 190A, 190B	SG 503 - Amplitude range 5 mV to 5.5 V p-p.	190B - Amplitude range 40 mV to 10 V p-p.
191	SG 503 - Frequency range 250 kHz to 250 MHz.	191 - Frequency range 350 kHz to 100 MHz.
067-0532-01	SG 503 - Frequency range 250 kHz to 250 MHz.	0532-01 - Frequency range 65 MHz to 500 MHz.
TG 501 replaces 180, 180A	TG 501 - Marker outputs, 5 sec to 1 ns. Sinewave available at 5, 2, and 1 ns. Trigger output - slaved to marker output from 5 sec through 100 ns. One time-mark can be generated at a time.	180A - Marker outputs, 5 sec to 1 μs. Sinewave available at 20, 10, and 2 ns. Trigger pulses 1, 10, 100 Hz; 1, 10, and 100 kHz. Multiple time-marks can be generated simultaneously.
181	TG 501 - Marker outputs, 5 sec to 1 ns. Sinewave available at 5, 2, and 1 ns.	181 - Marker outputs, 1, 10, 100, 1000, and 10,000 μs, plus 10 ns sinewave.
184	TG 501 - Marker outputs, 5 sec to 1 ns. Sinewave available at 5, 2, and 1 ns. *Trigger output - slaved to marker* output from 5 sec through 100 ns. One time-mark can be generated at a time.	184 - Marker outputs, 5 sec to 2 ns. Sinewave available at 50, 20, 10, 5, *and 2 ns. Separate trigger pulses* of 1 and .1 sec; 10, 1, and .1 ms; 10 and 1 μs. Marker amplifier provides positive or negative time marks of 25 V min. Marker intervals of 1 and .1 sec; 10, 1, and .1 ms; 10 and 1 μs.
2901	TG 501 - Marker outputs, 5 sec to 1 ns. Sinewave available at 5, 2, and 1 ns. Trigger output - slaved to marker output from 5 sec through 100 ns. One time-mark can be generated at a time.	2901 - Marker outputs, 5 sec to 0.1 μs. Sinewave available to 50, 10, and 5 ns. Separate trigger pulses, from 5 sec to 0.1 μs. Multiple time-marks can be generated simultaneously.

NOTE: All TM 500 generator outputs are short-proof. All TM 500 plug-in instruments require TM 500-Series Power Module.

TEKTRONIX®
committed to technical excellence

MANUAL CHANGE INFORMATION

PRODUCT 5A24N
070-1145-00

CHANGE REFERENCE M31692
DATE 5-11-77

CHANGE:	DESCRIPTION

EFF SN B040000-up

ELECTRICAL PARTS LIST AND SCHEMATIC CHANGES

CHANGE TO:

A1	670-1564-01	CKT BOARD ASSY:MAIN
DS21	150-0130-00	LAMP,INCANDESCENT
R21	315-0270-00	RES.,FXD,CMPSN:27 OHM,5%,0.25W

DIAGRAM CORRECTION

R21 is changed to 27 ohm and goes to +5V instead of A1.