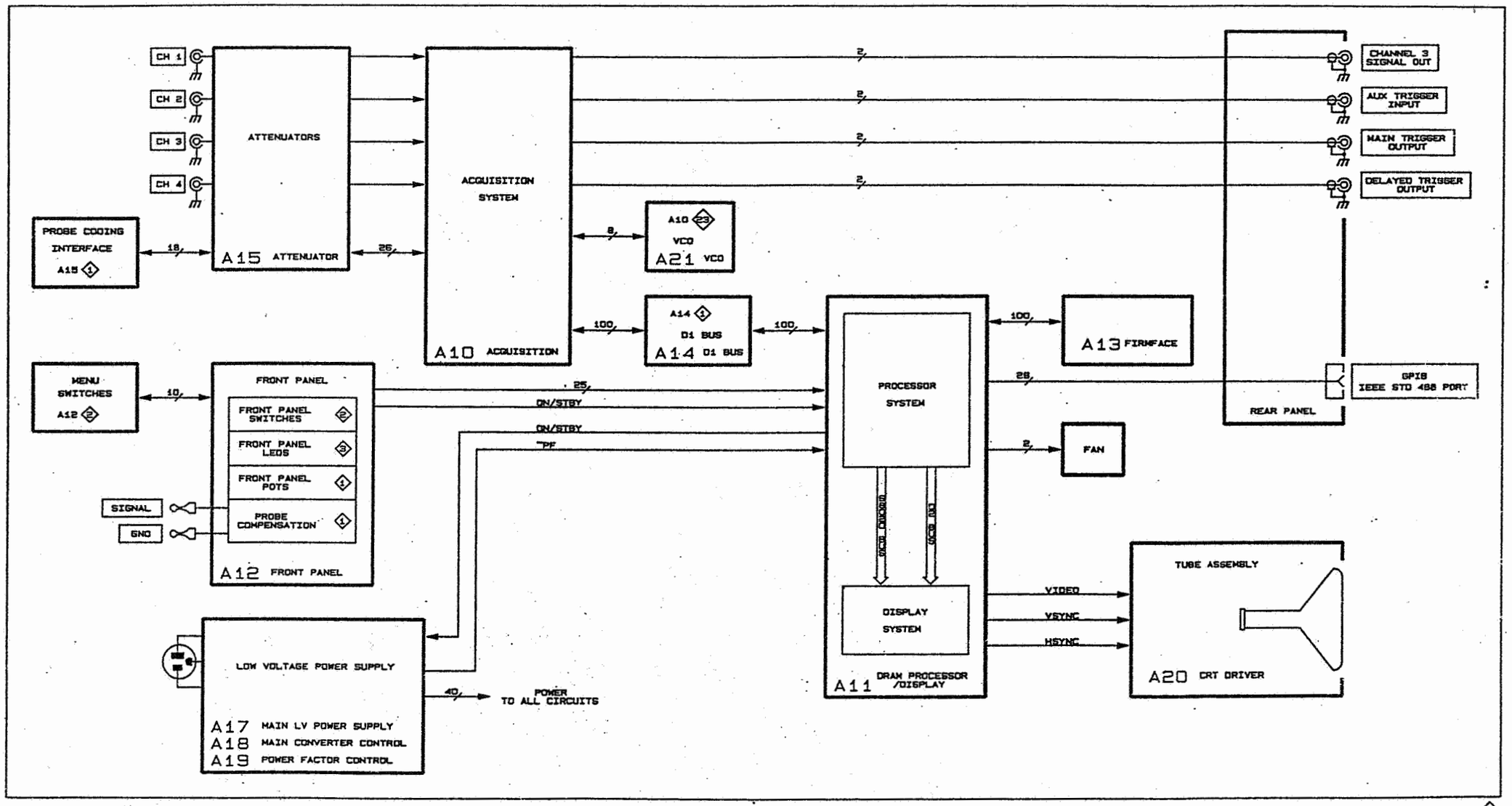

TDS 540

TDS 540 BLOCK DIAGRAM 0

Scan by vintageTEK - Your donations help support the museum - vintagetek.org

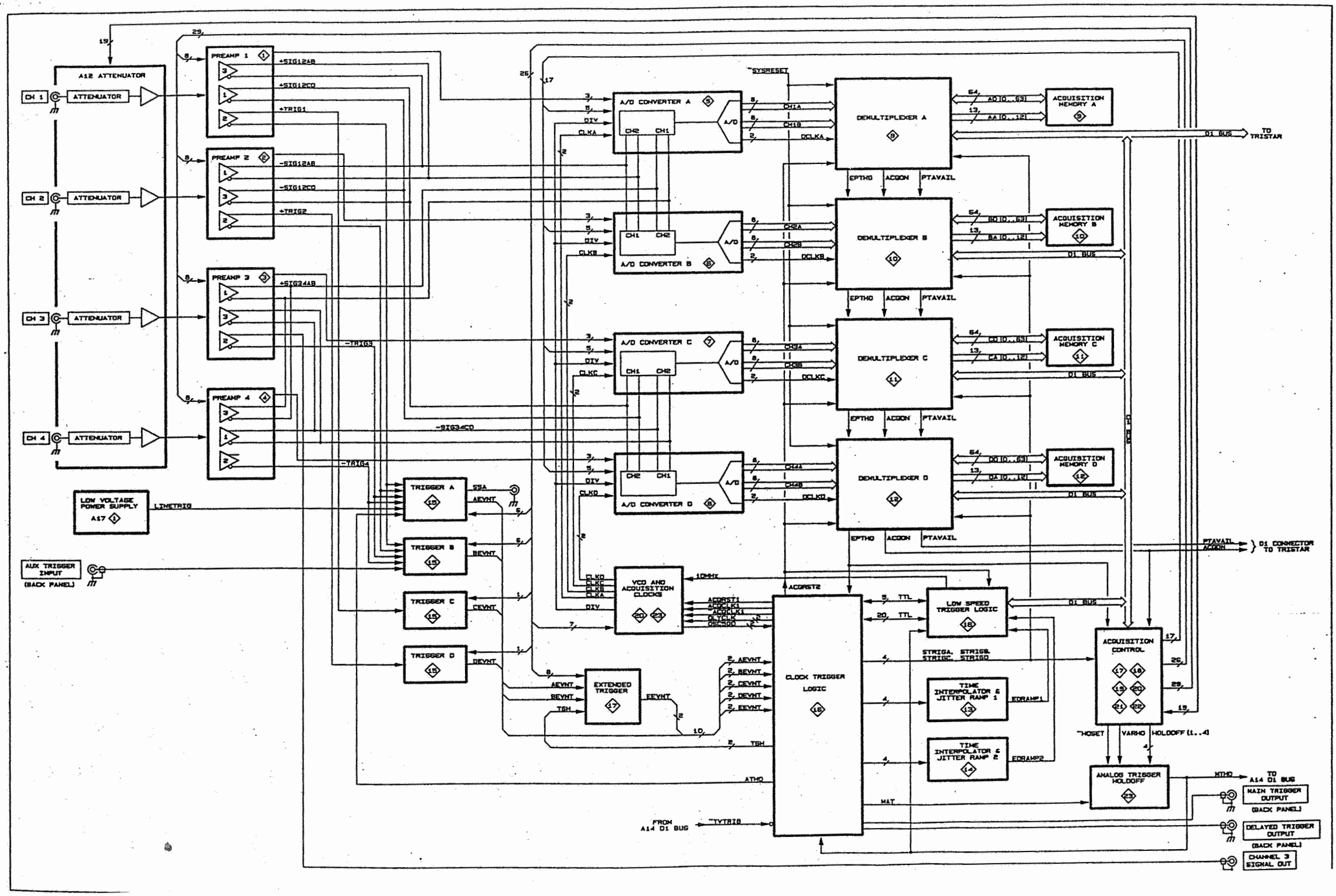

Scan by vintageTEK - Your donations help support the museum - vintagetek.org

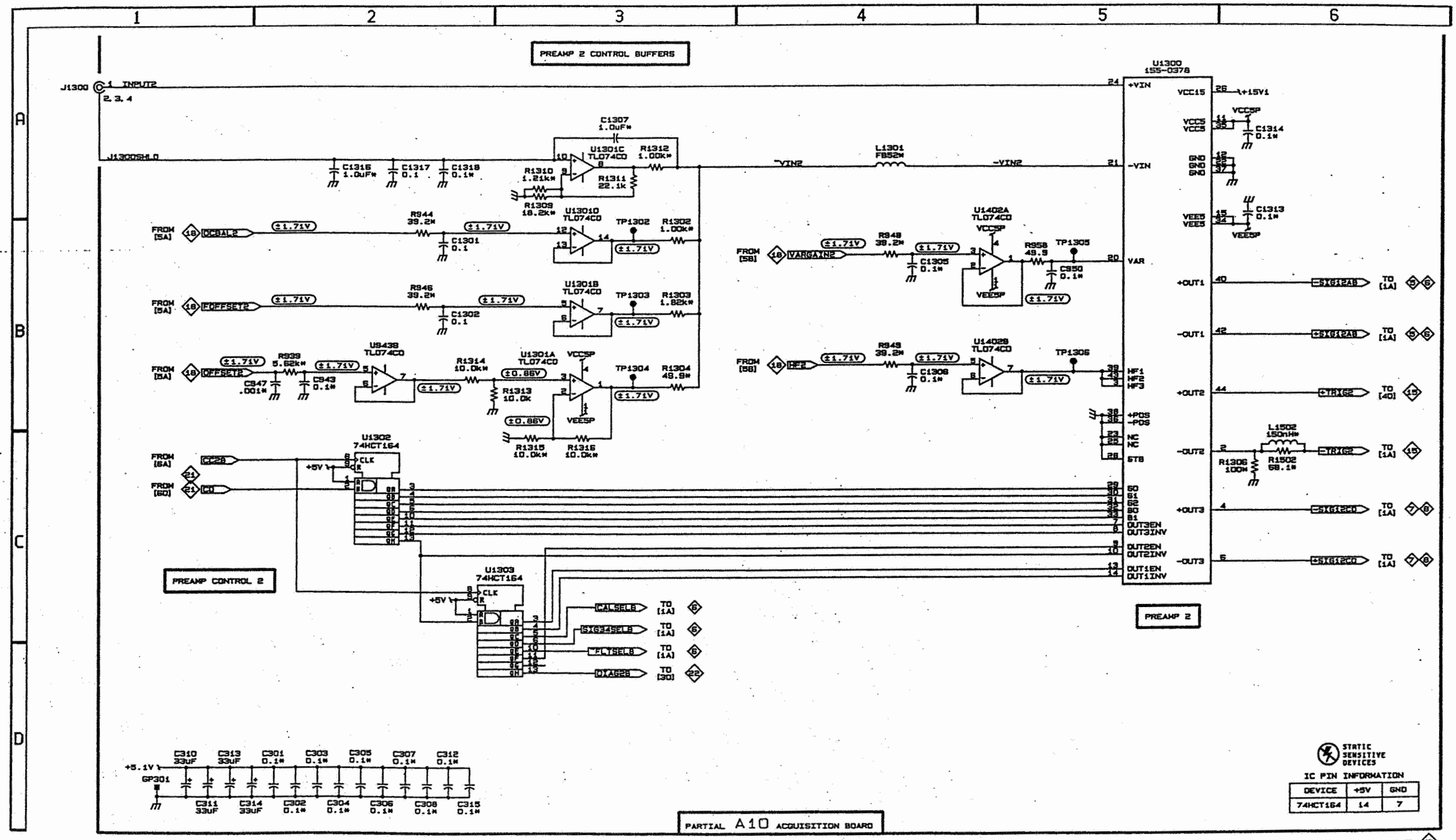

Scan by vintageTEK - Your donations help support the museum - vintagetek.org

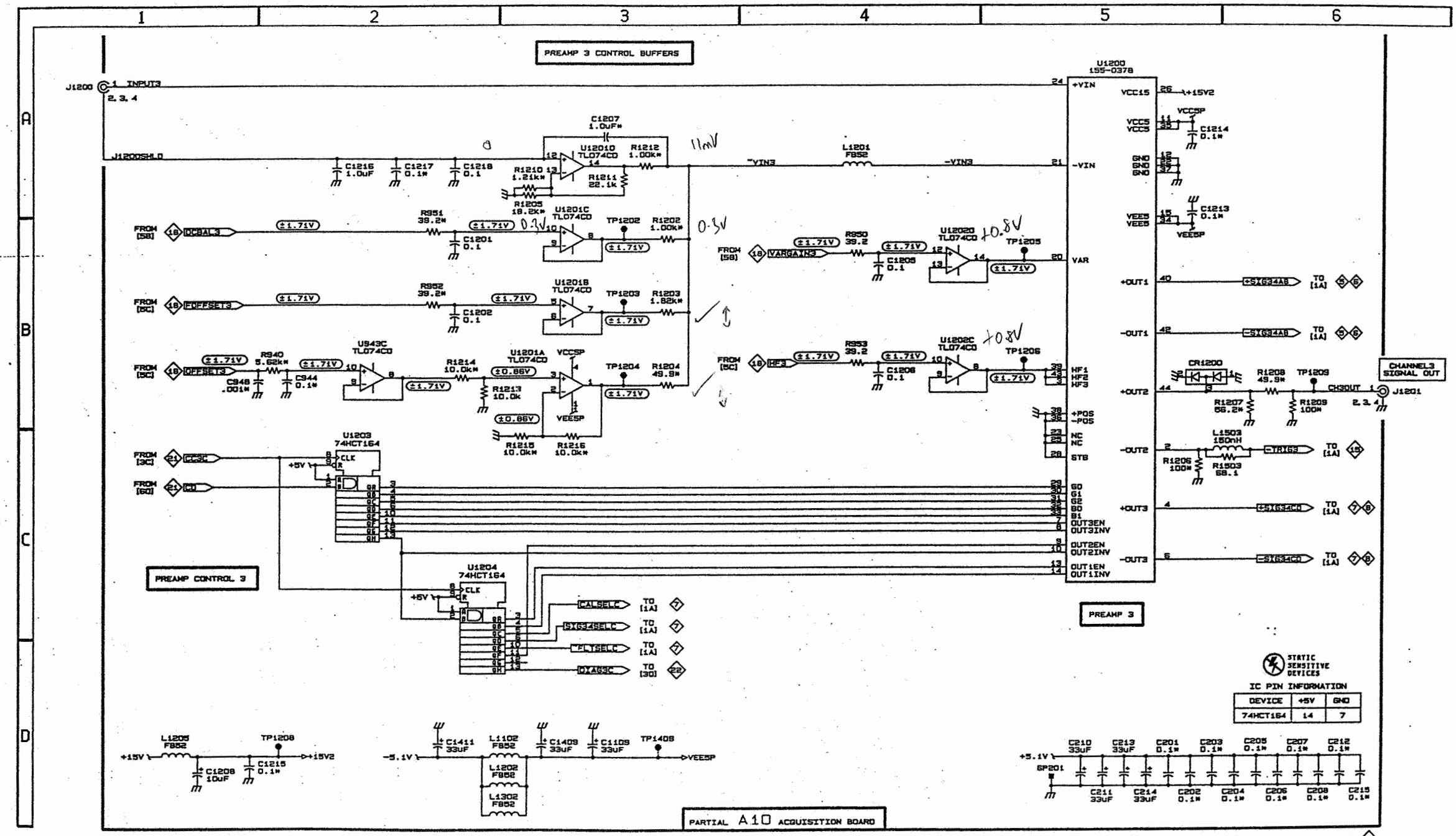

Scan by vintageTEK - Your donations help support the museum - vintagetek.org

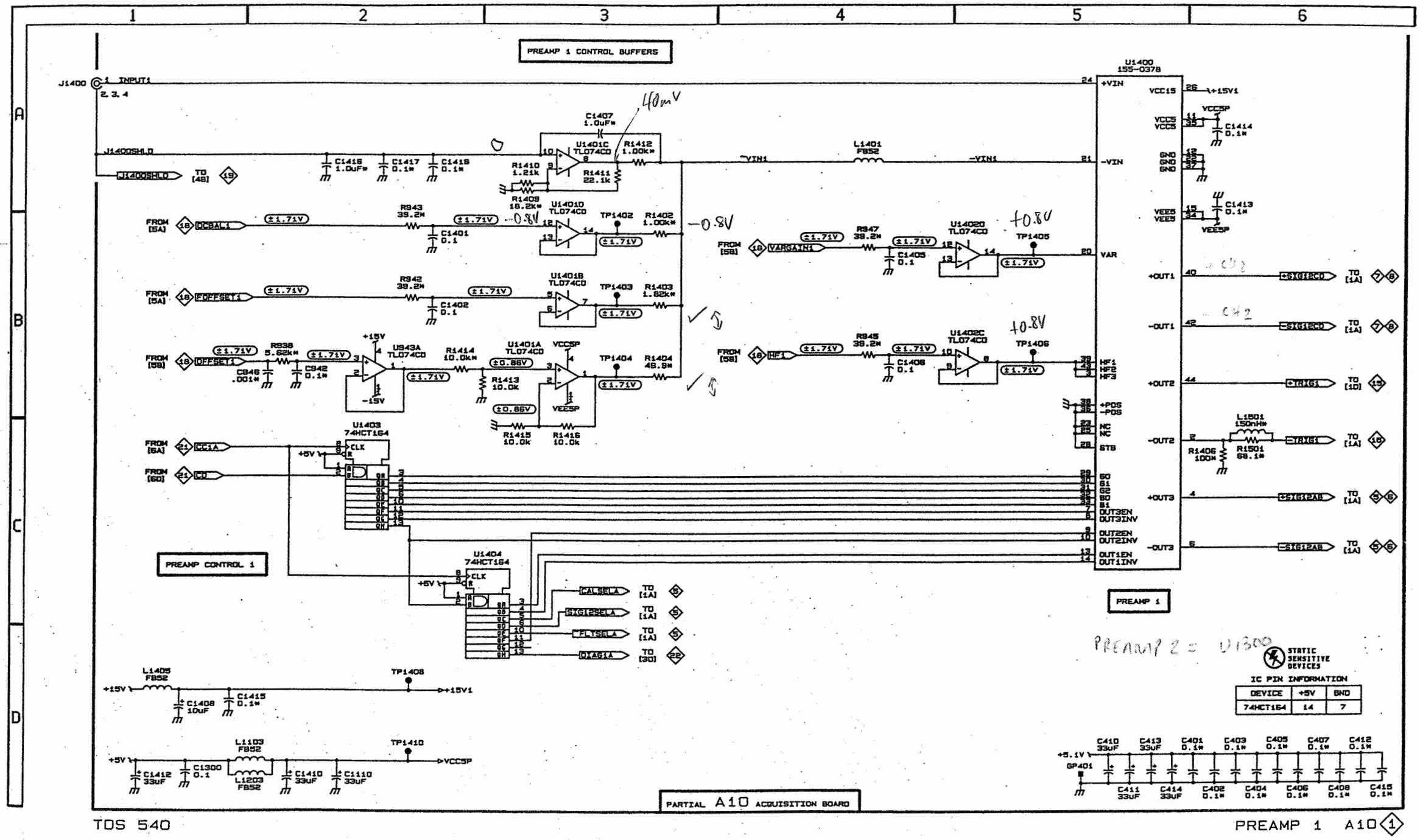

Scan by vintageTEK - Your donations help support the museum - vintagetek.org

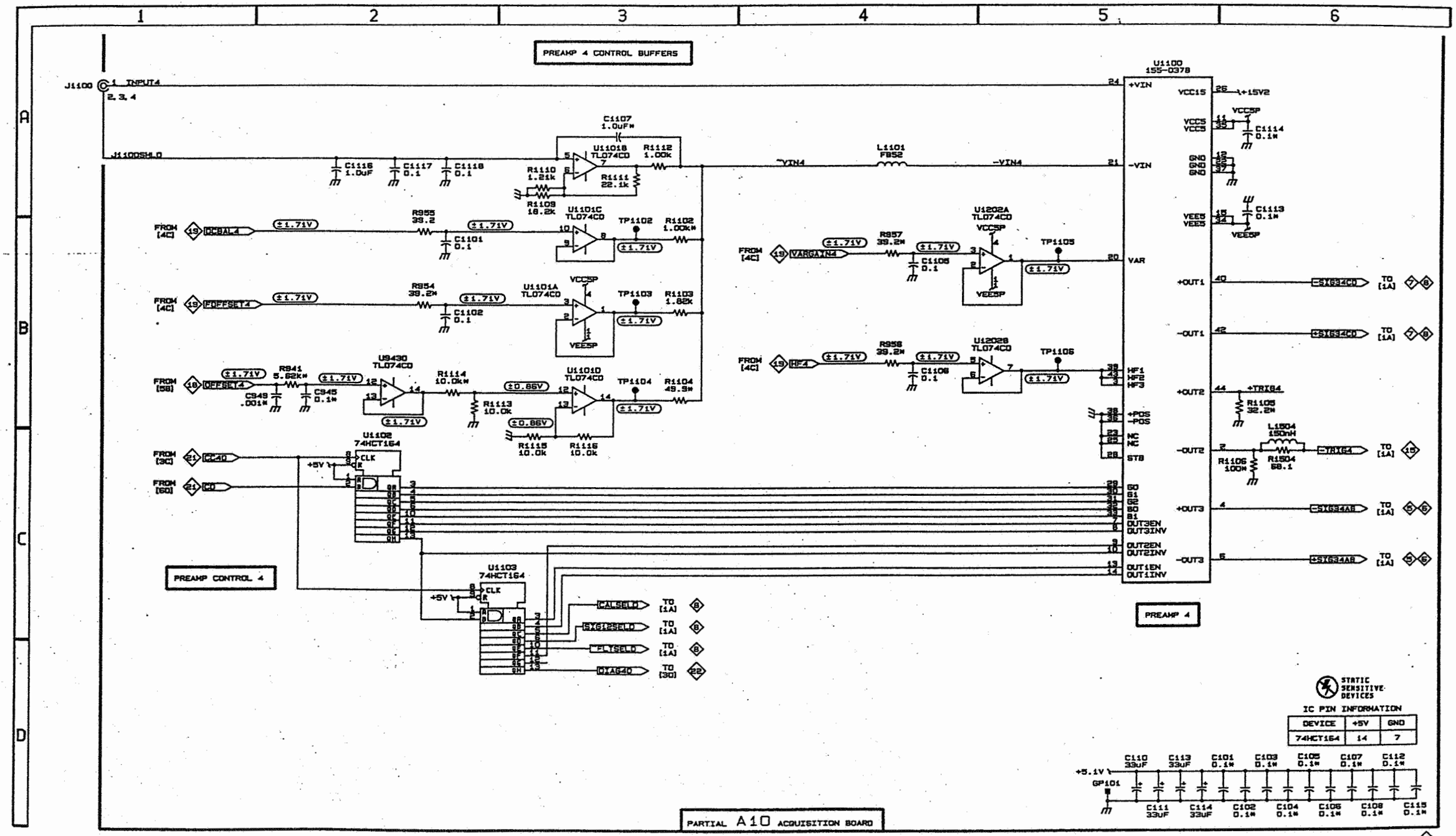

Scan by vintageTEK - Your donations help support the museum - vintagetek.org

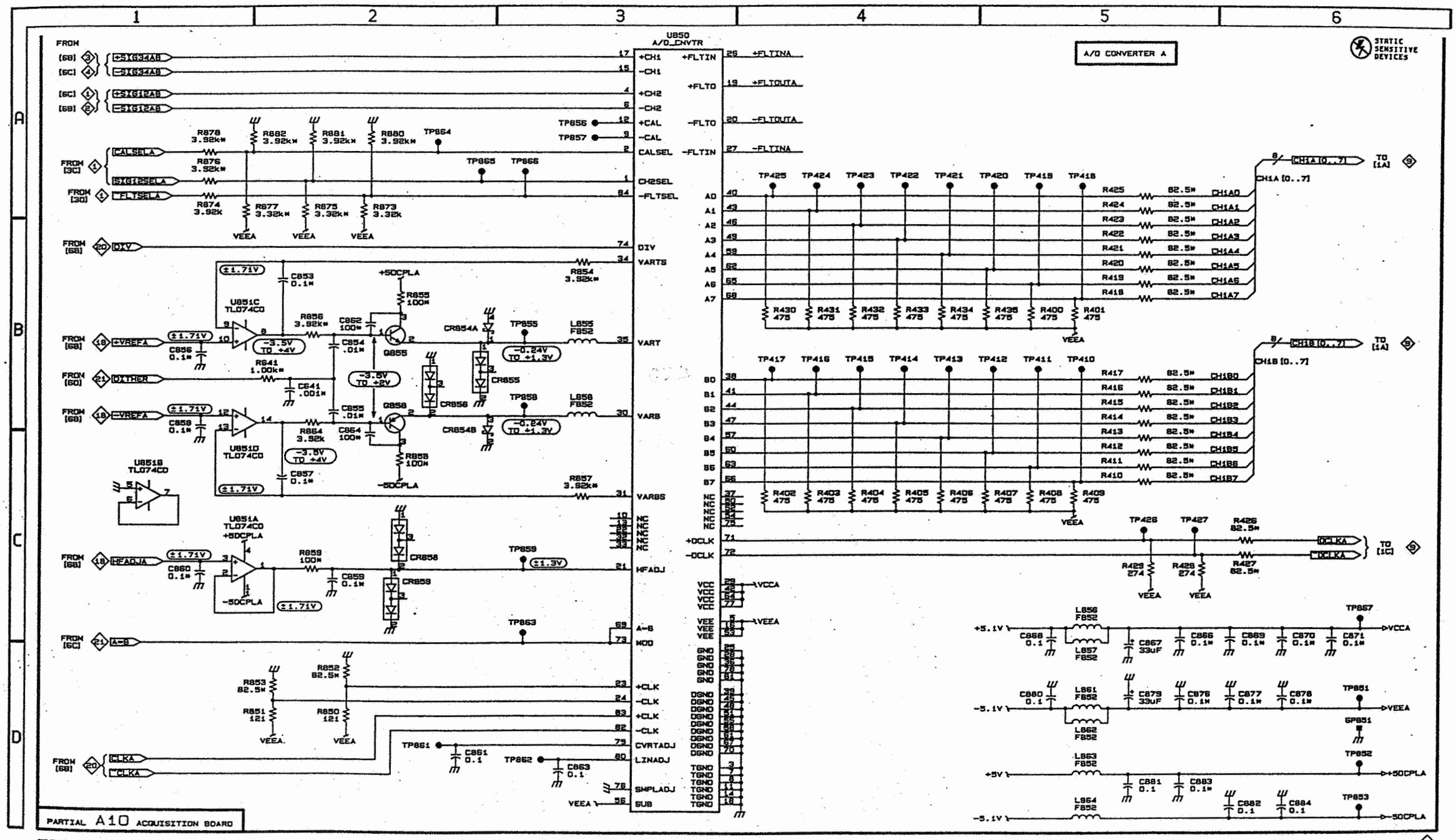

Scan by vintageTEK - Your donations help support the museum - vintagetek.org

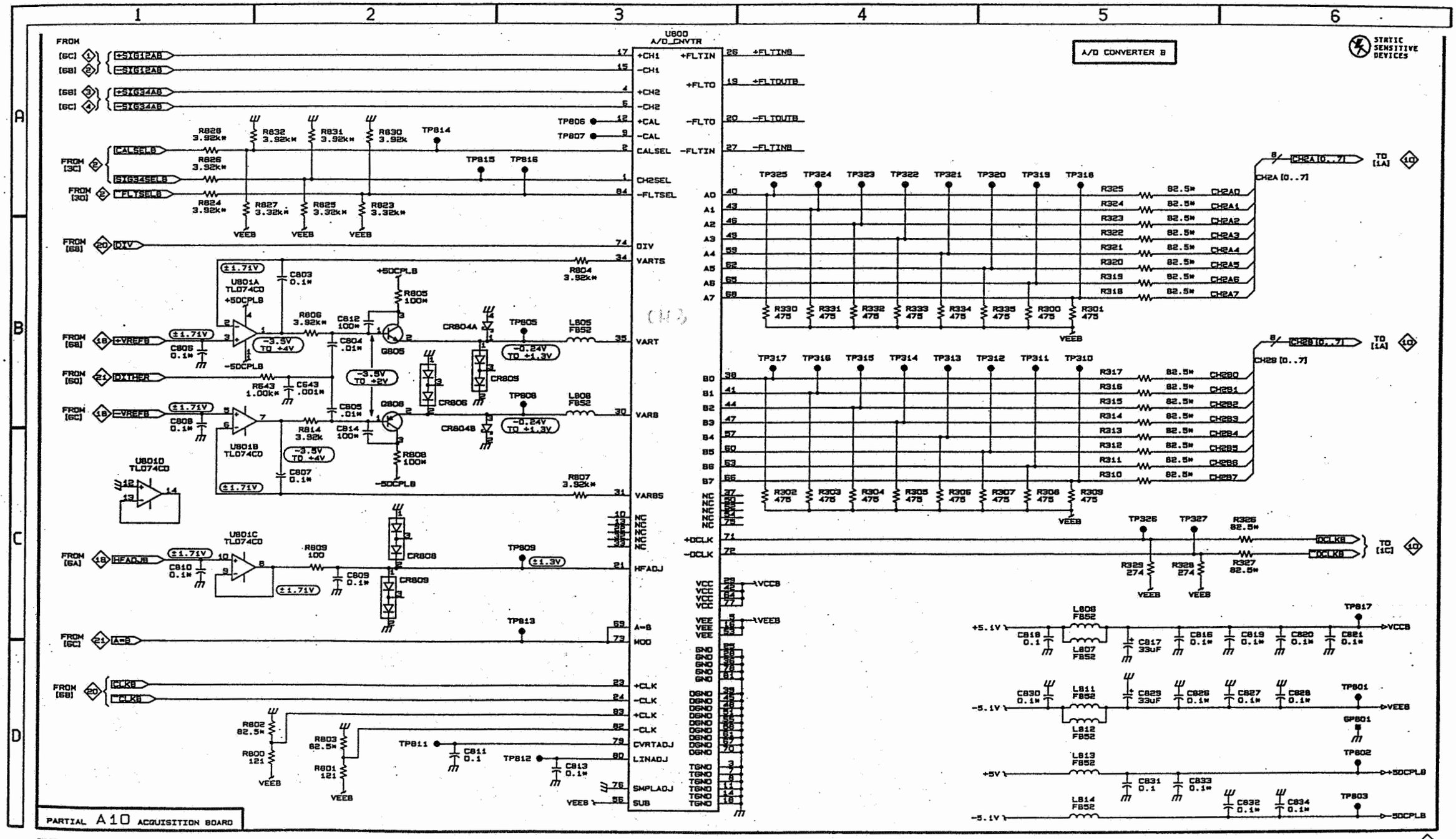

Scan by vintageTEK - Your donations help support the museum - vintagetek.org

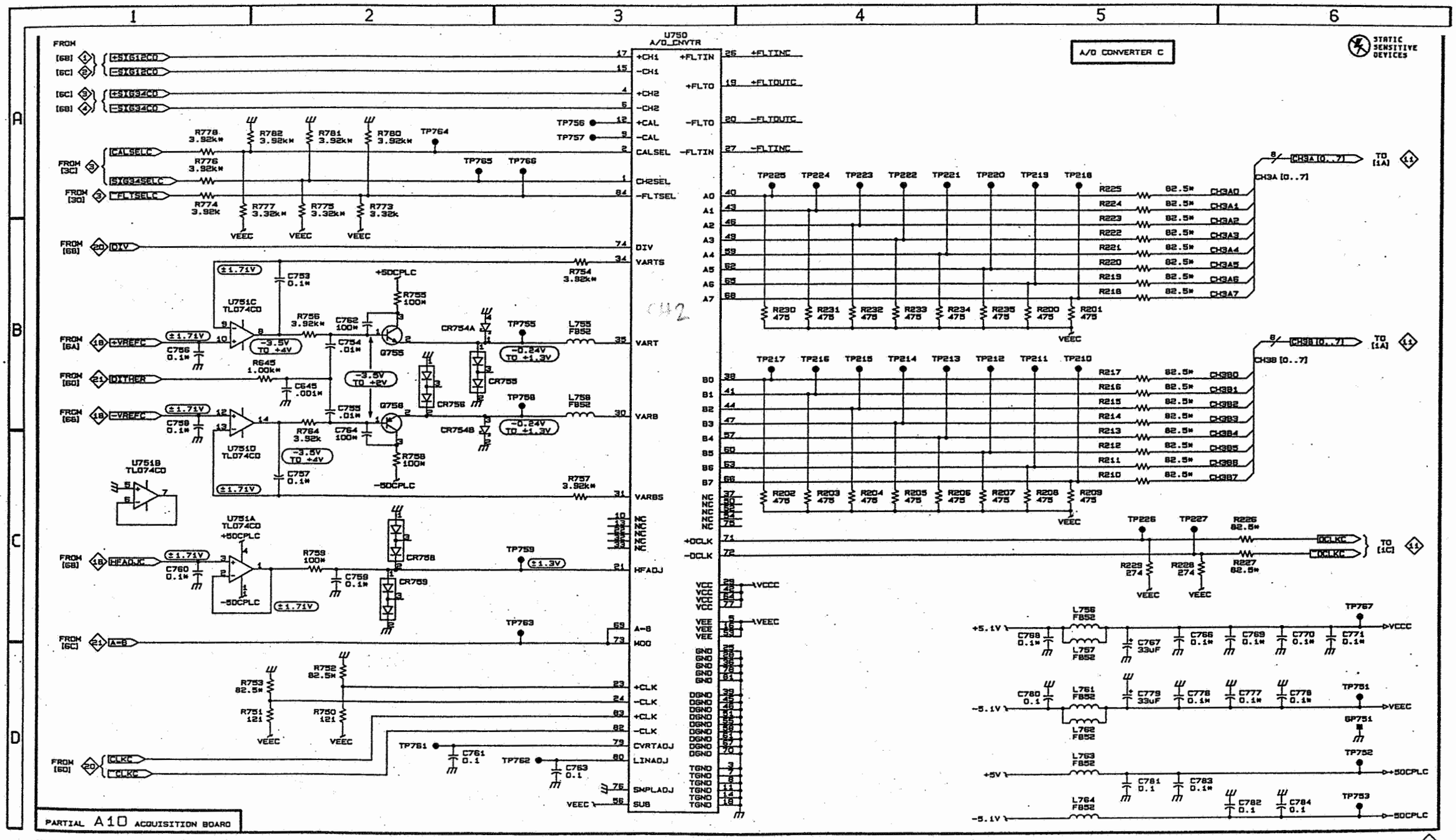

TDS 540

CHANNEL C CONVERTER A10 7

Scan by vintageTEK - Your donations help support the museum - vintagetek.org

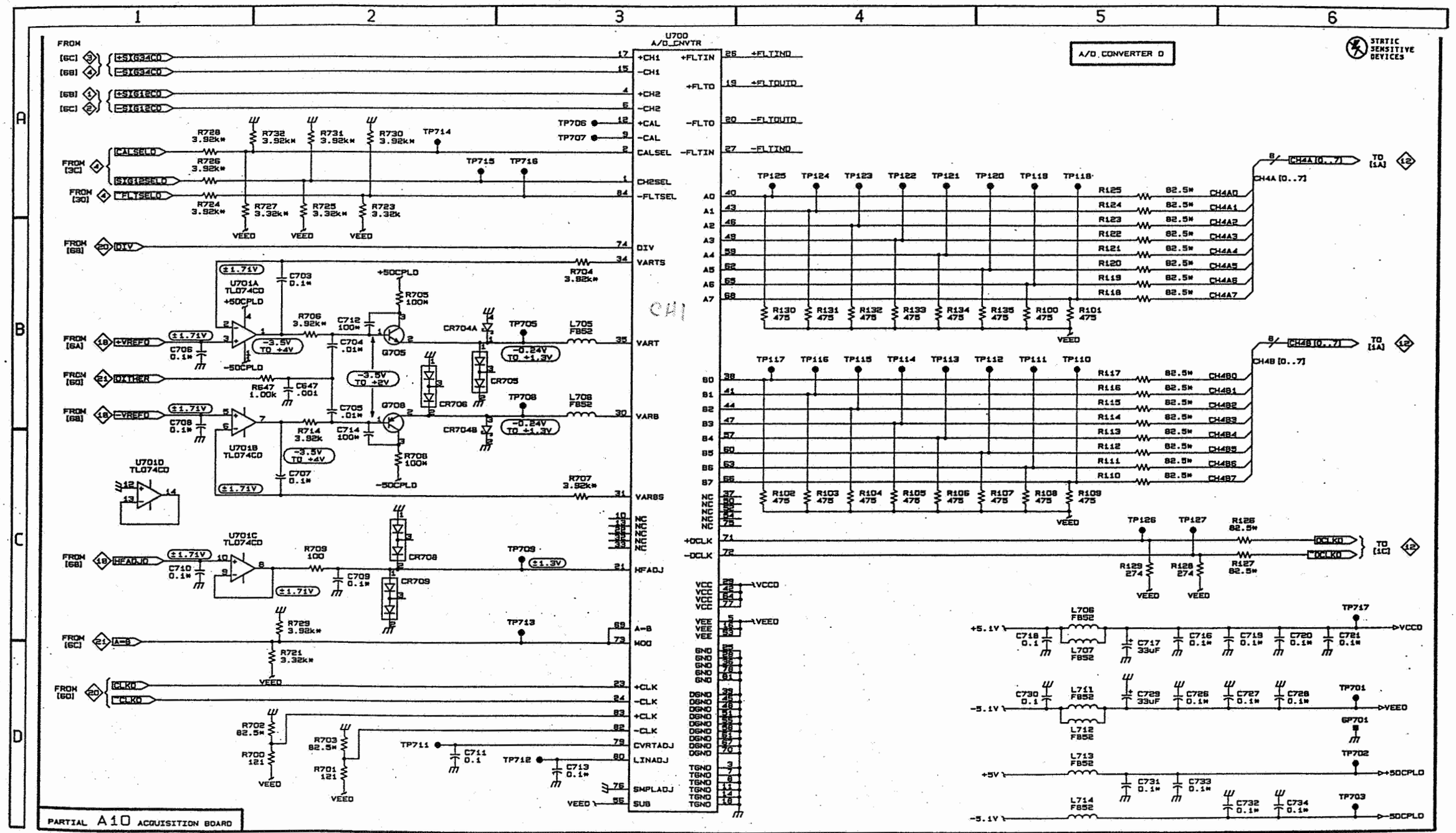

Scan by vintageTEK - Your donations help support the museum - vintagetek.org

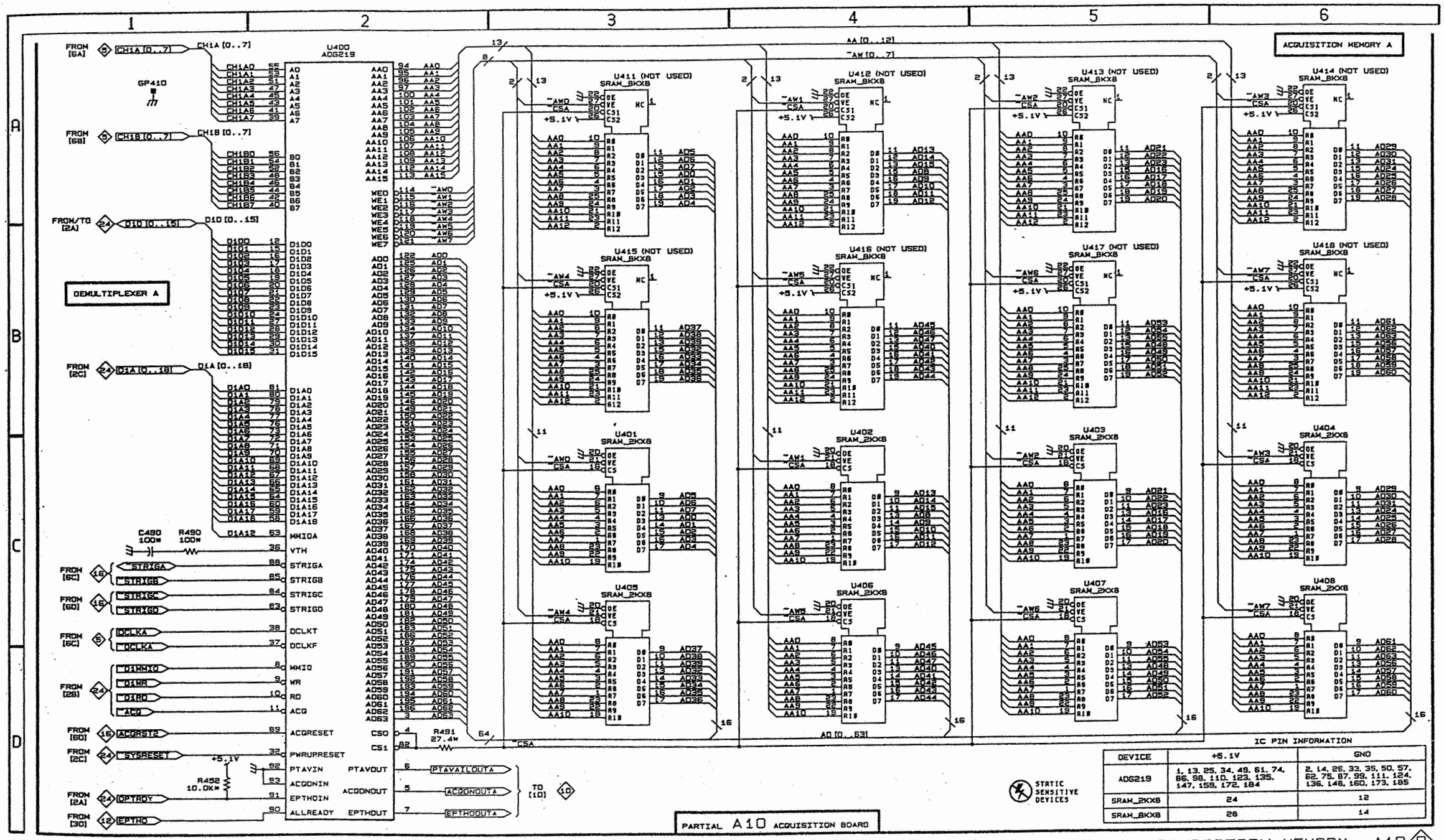

DEVICE	+5.1V	GND
ADG219	1, 13, 25, 34, 49, 61, 74, 86, 98, 110, 123, 135, 147, 159, 172, 184	2, 14, 26, 33, 35, 50, 57, 62, 75, 87, 99, 111, 124, 136, 148, 160, 173, 185
SRAM_2KX8	24	12
SRAM_8KX8	28	14

Scan by vintageTEK - Your donations help support the museum - vintagetek.org

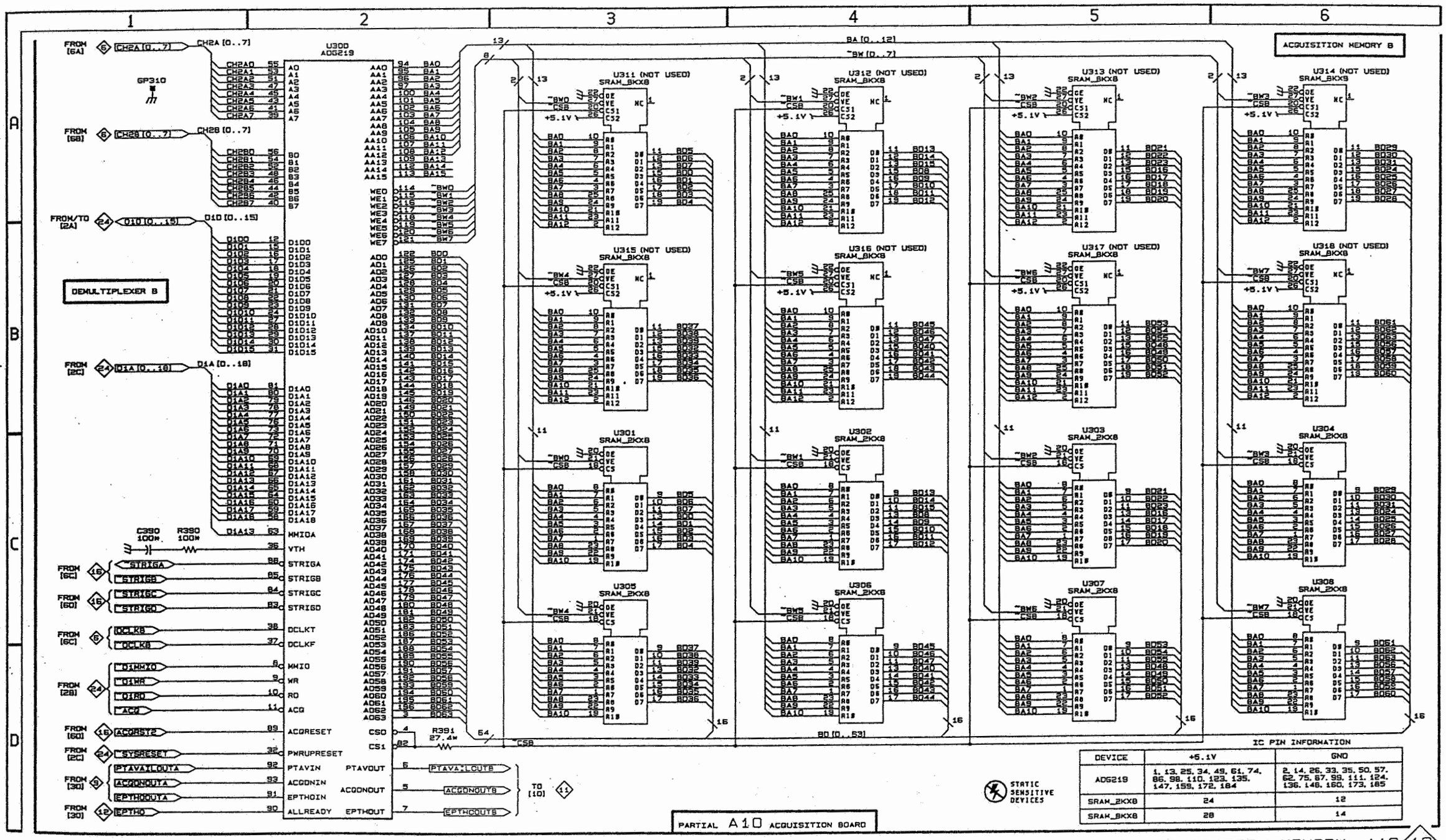

IC PIN INFORMATION

DEVICE	+5.1V	GND
ADG219	1, 13, 25, 34, 49, 61, 74, 86, 98, 110, 123, 135, 147, 159, 172, 184	2, 14, 26, 33, 35, 50, 57, 62, 75, 87, 99, 111, 124, 136, 148, 160, 173, 185
SRAM_2KX8	24	12
SRAM_8KX8	28	14

CHANNEL B ACQUISITION MEMORY A10 10

Scan by vintageTEK - Your donations help support the museum - vintagetek.org

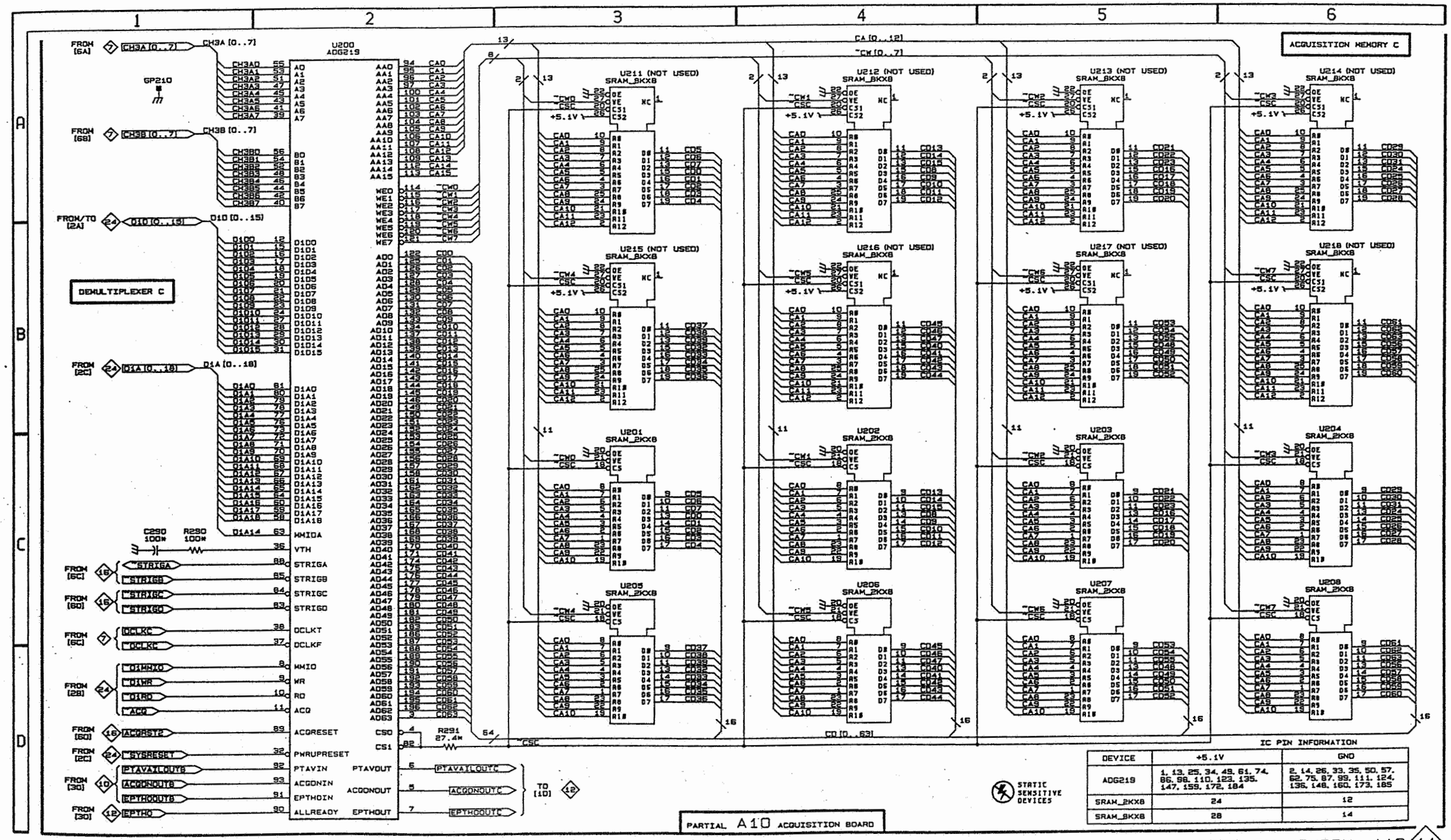

Scan by vintageTEK - Your donations help support the museum - vintagetek.org

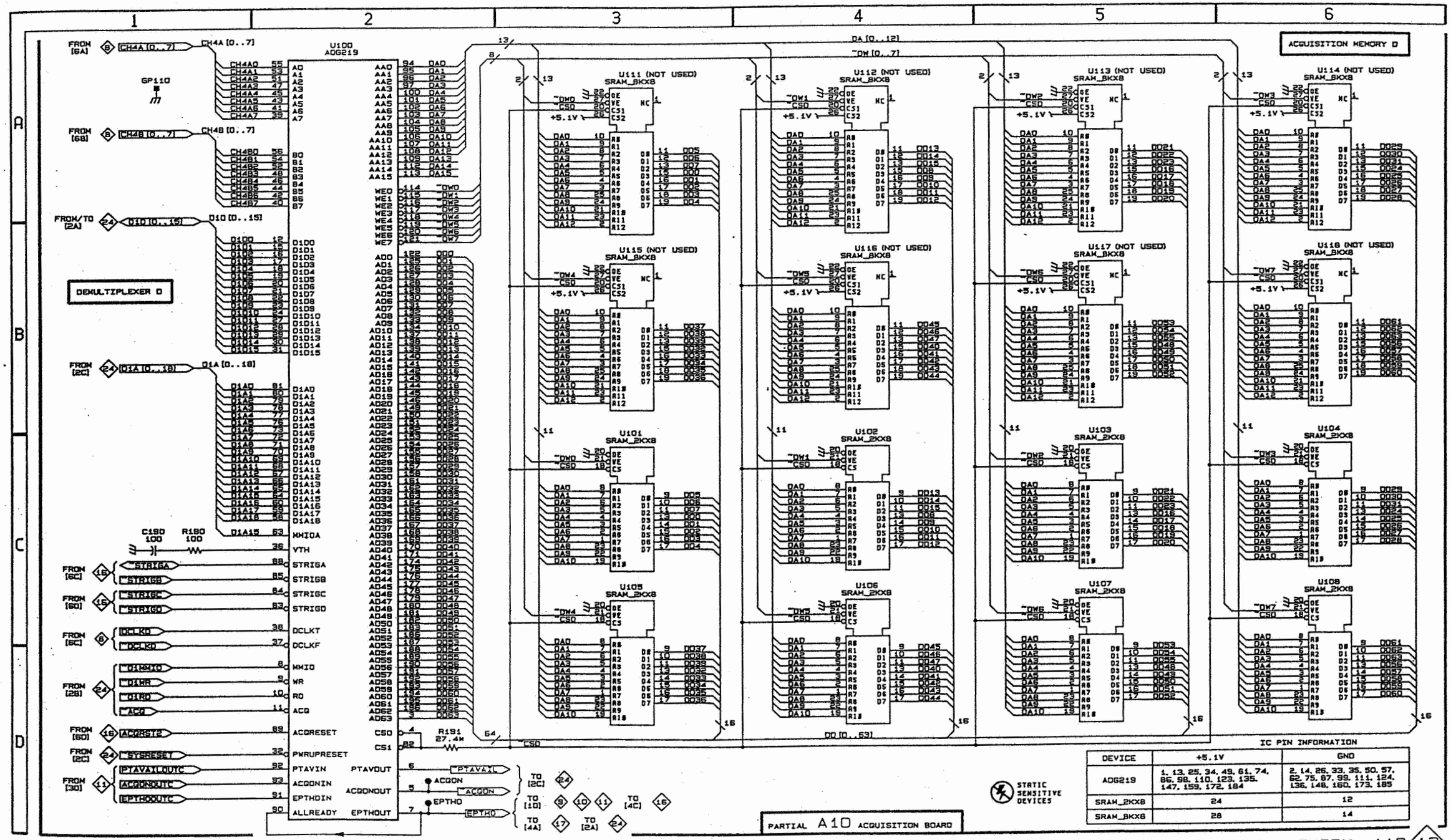

IC PIN INFORMATION

DEVICE	+5.1V	GND
ADG219	1, 13, 25, 34, 49, 61, 74, 86, 98, 110, 123, 135, 147, 159, 172, 184	2, 14, 26, 33, 35, 50, 57, 62, 75, 87, 99, 111, 124, 136, 148, 160, 173, 185
SRAM_2KX8	24	12
SRAM_8KX8	28	14

Scan by vintageTEK - Your donations help support the museum - vintagetek.org

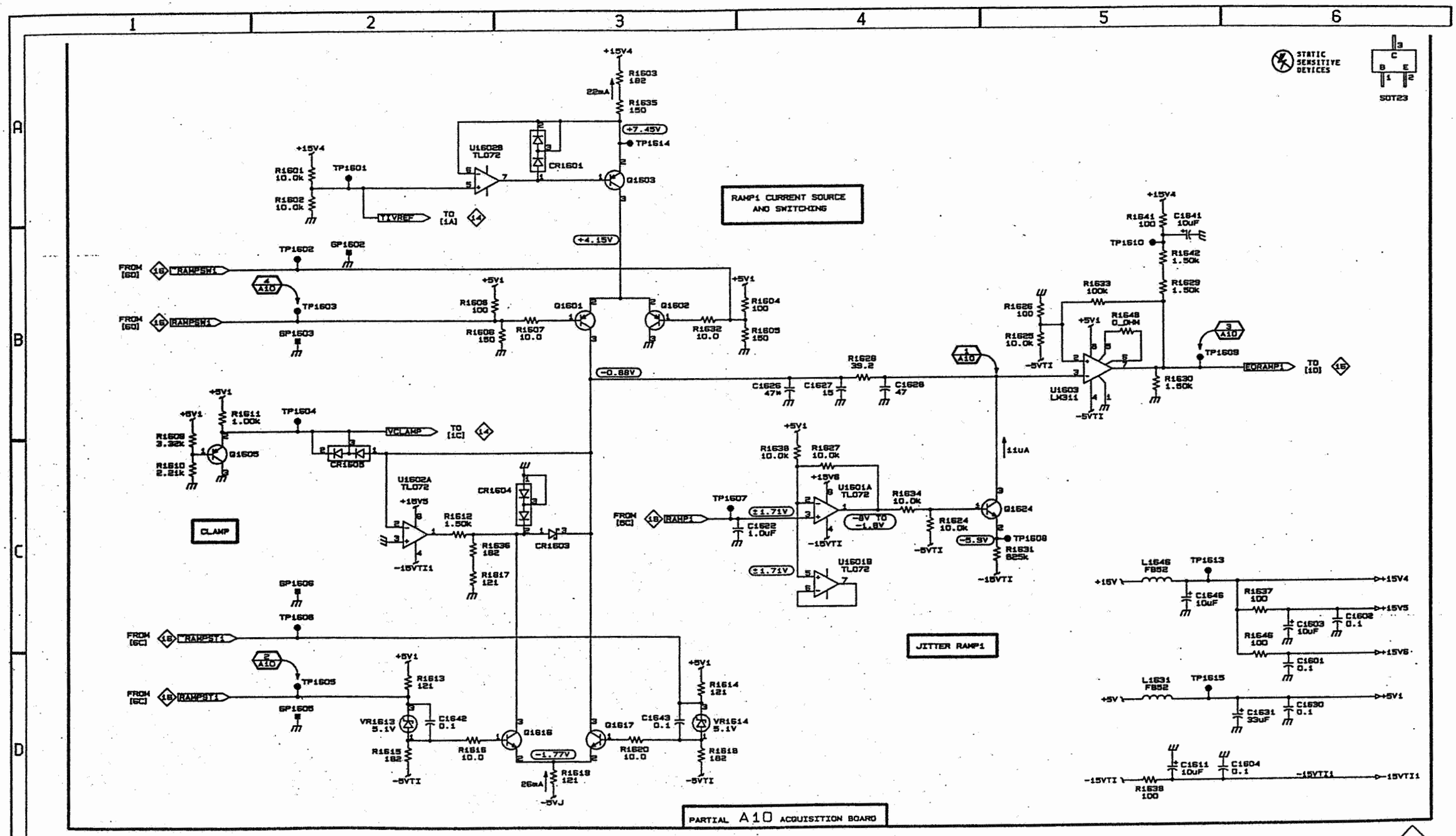

Scan by vintageTEK - Your donations help support the museum - vintagetek.org

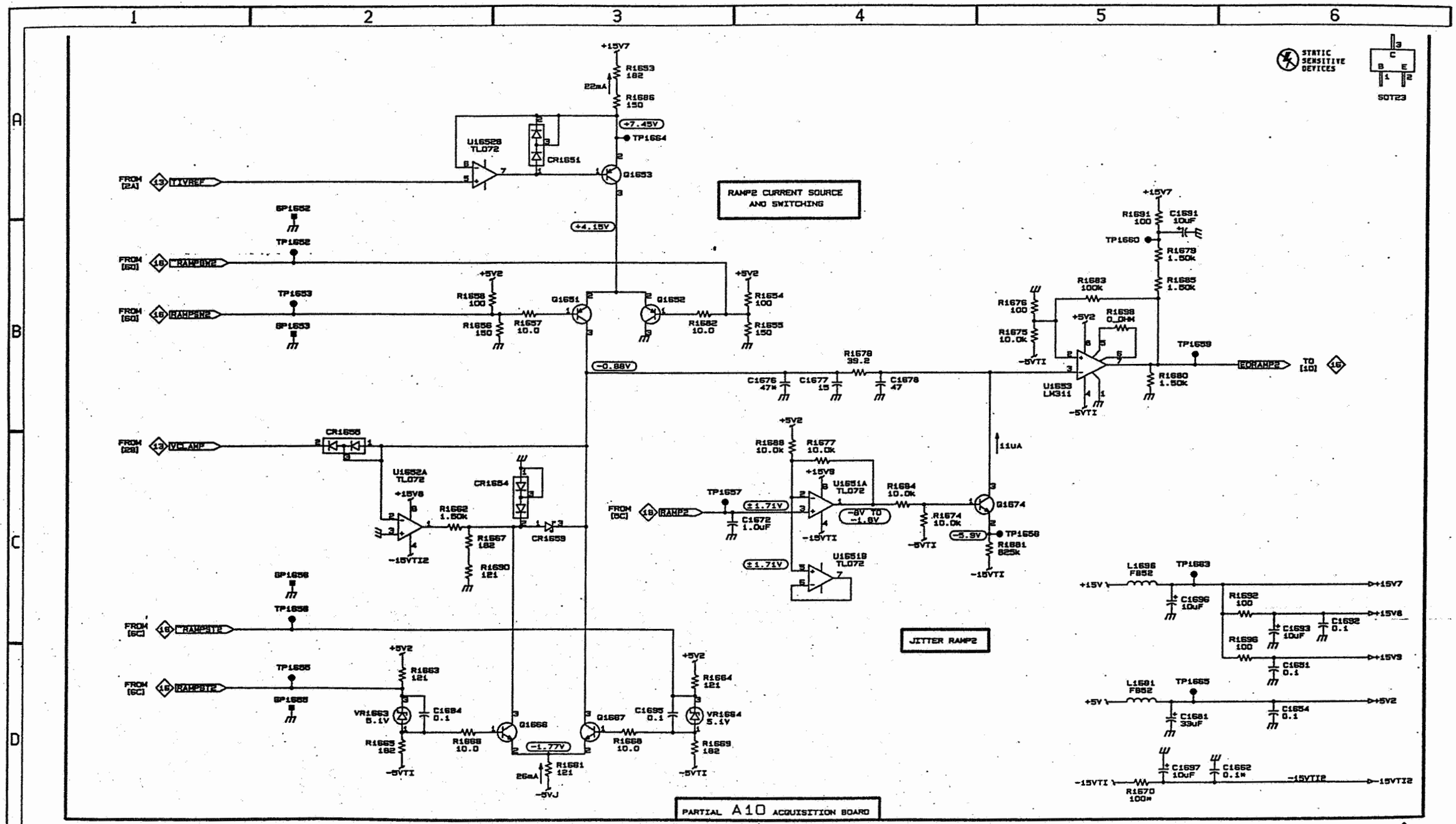

TDS 540

TIME INTERPOLATOR AND JITTER RAMP 2 A10 14

Scan by vintageTEK - Your donations help support the museum - vintagetek.org

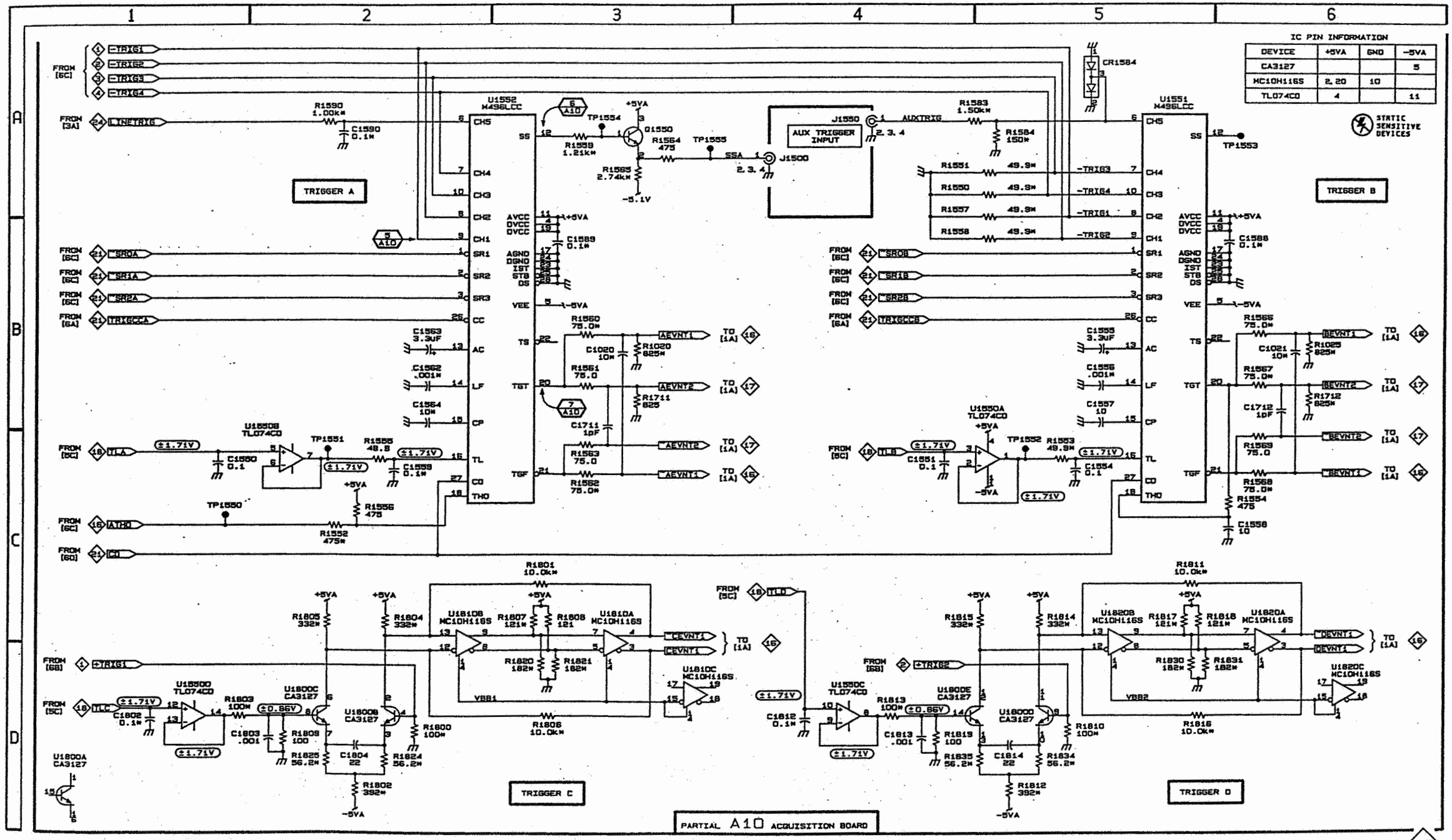

Scan by vintageTEK - Your donations help support the museum - vintagetek.org

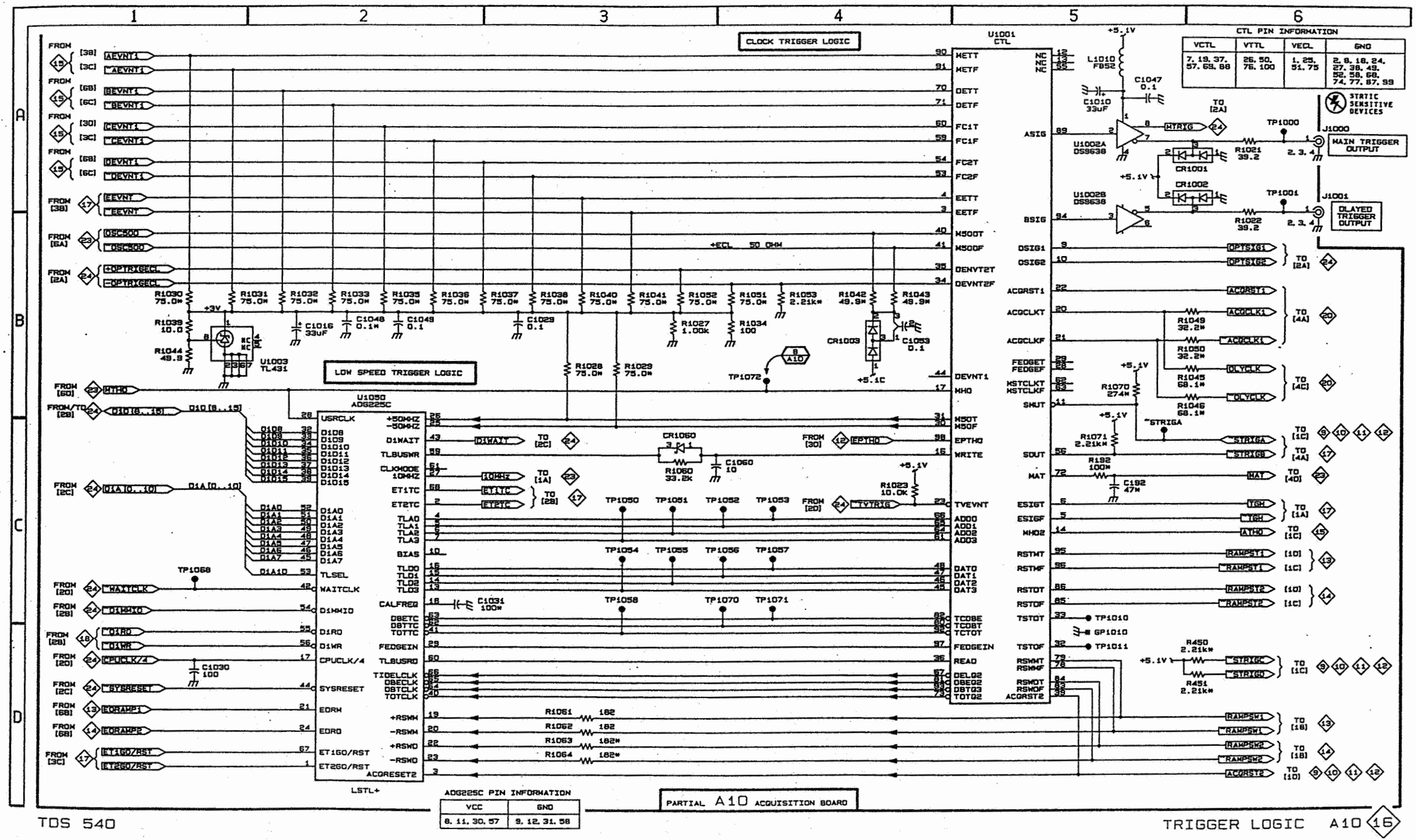

Scan by vintageTEK - Your donations help support the museum - vintagetek.org

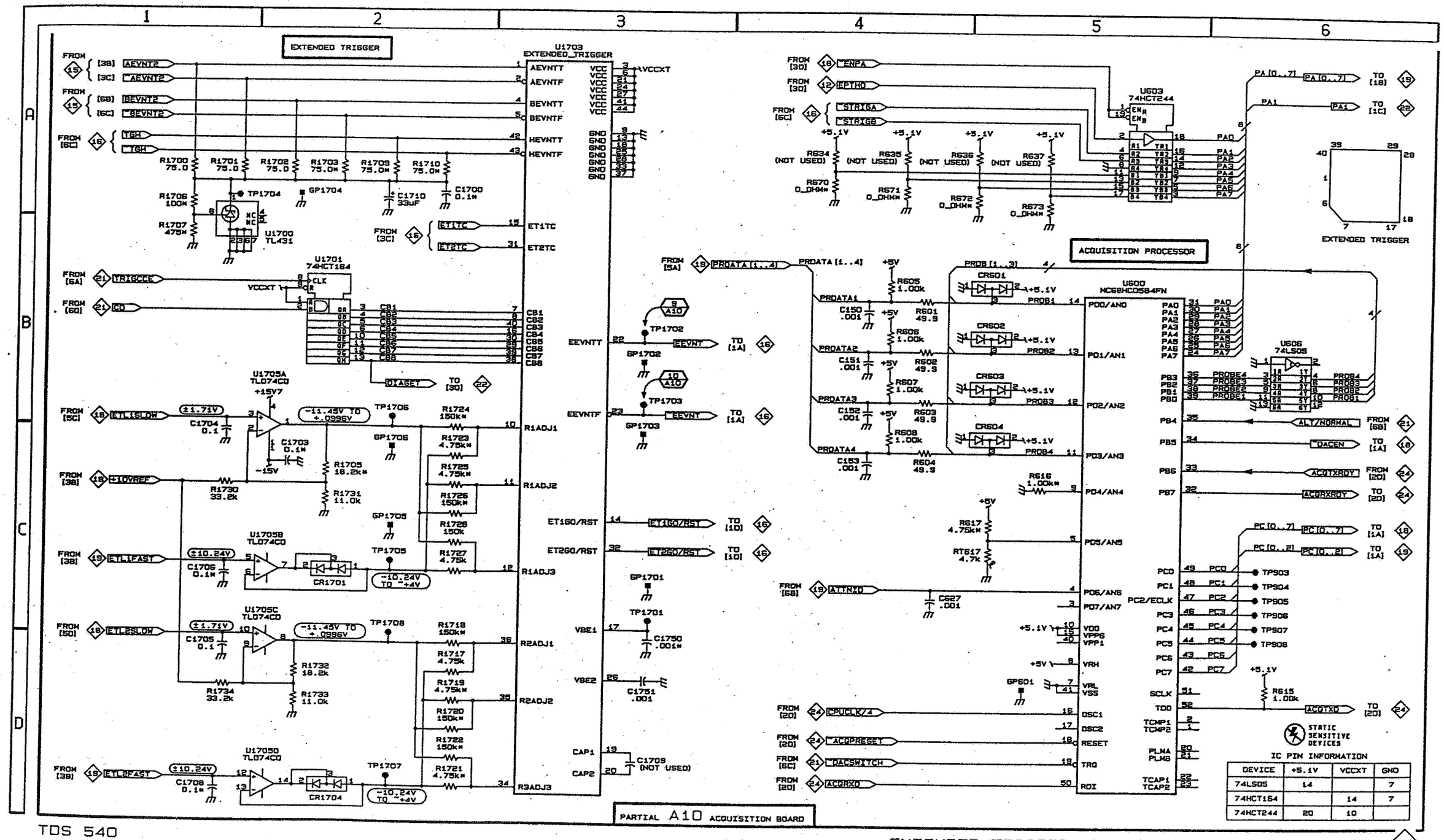

Scan by vintageTEK - Your donations help support the museum - vintagetek.org

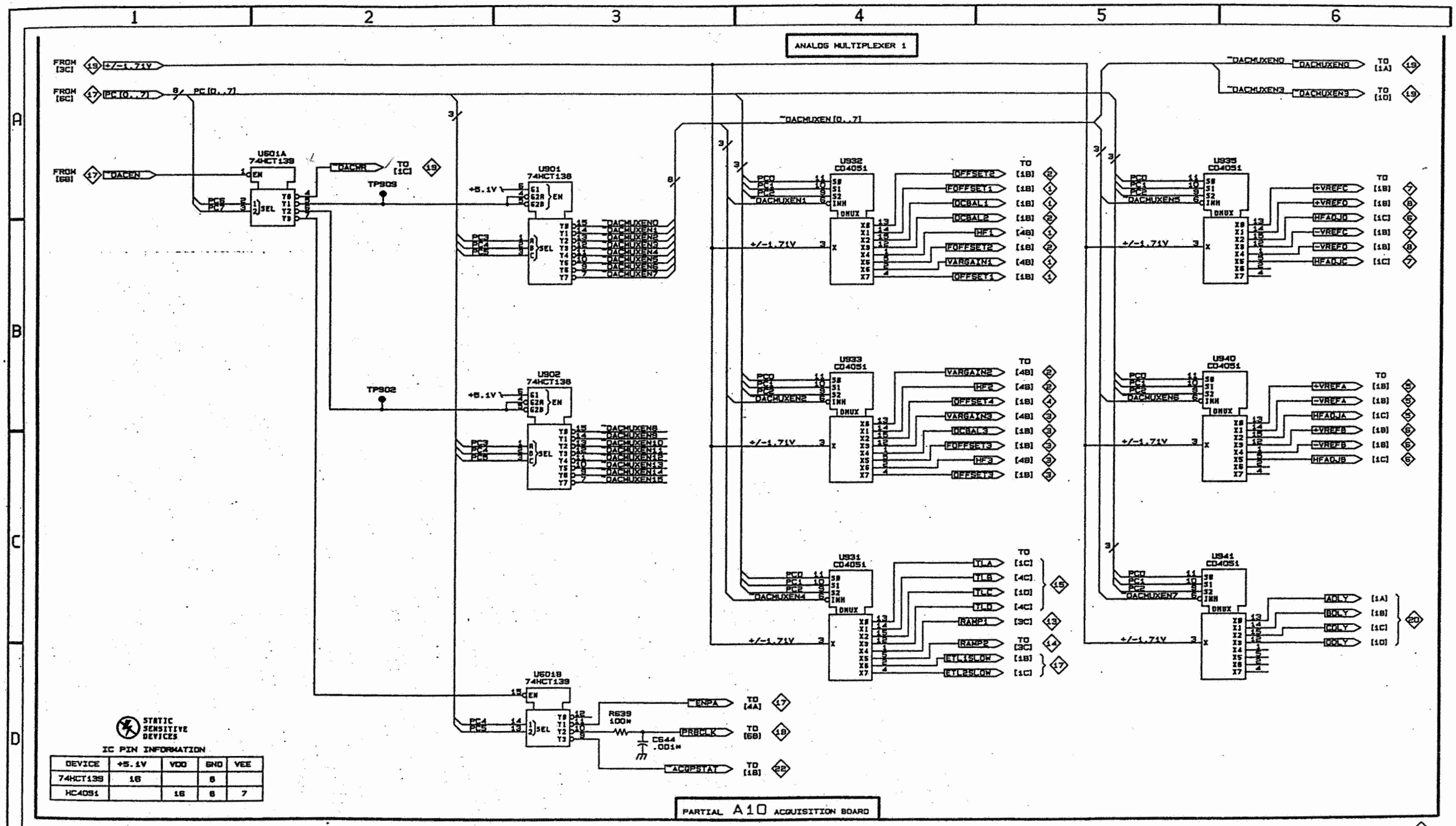

DEVICE	+5.1V	VDD	GND	VEE
74HCT139	16		8	
HC4051		16	8	7

TDS 540

ANALOG DAC CONTROL 1 A10 18

Scan by vintageTEK - Your donations help support the museum - vintagetek.org

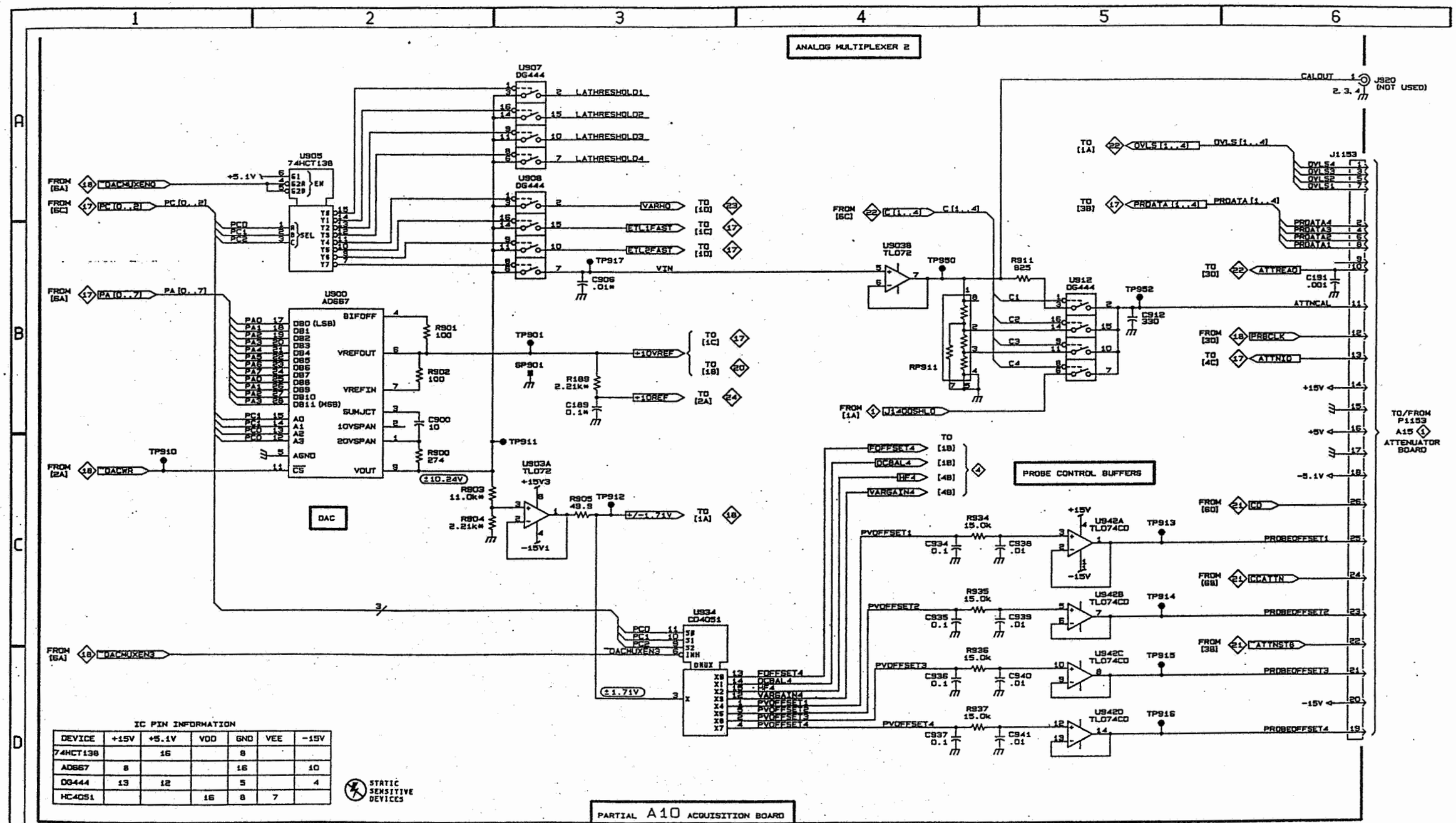

DEVICE	+15V	+5.1V	VDD	GND	VEE	-15V
74HCT138		16		8		
AD667	8			16		10
DG444	13	12		5		4
HC4051			16	8	7	

Scan by vintageTEK - Your donations help support the museum - vintagetek.org

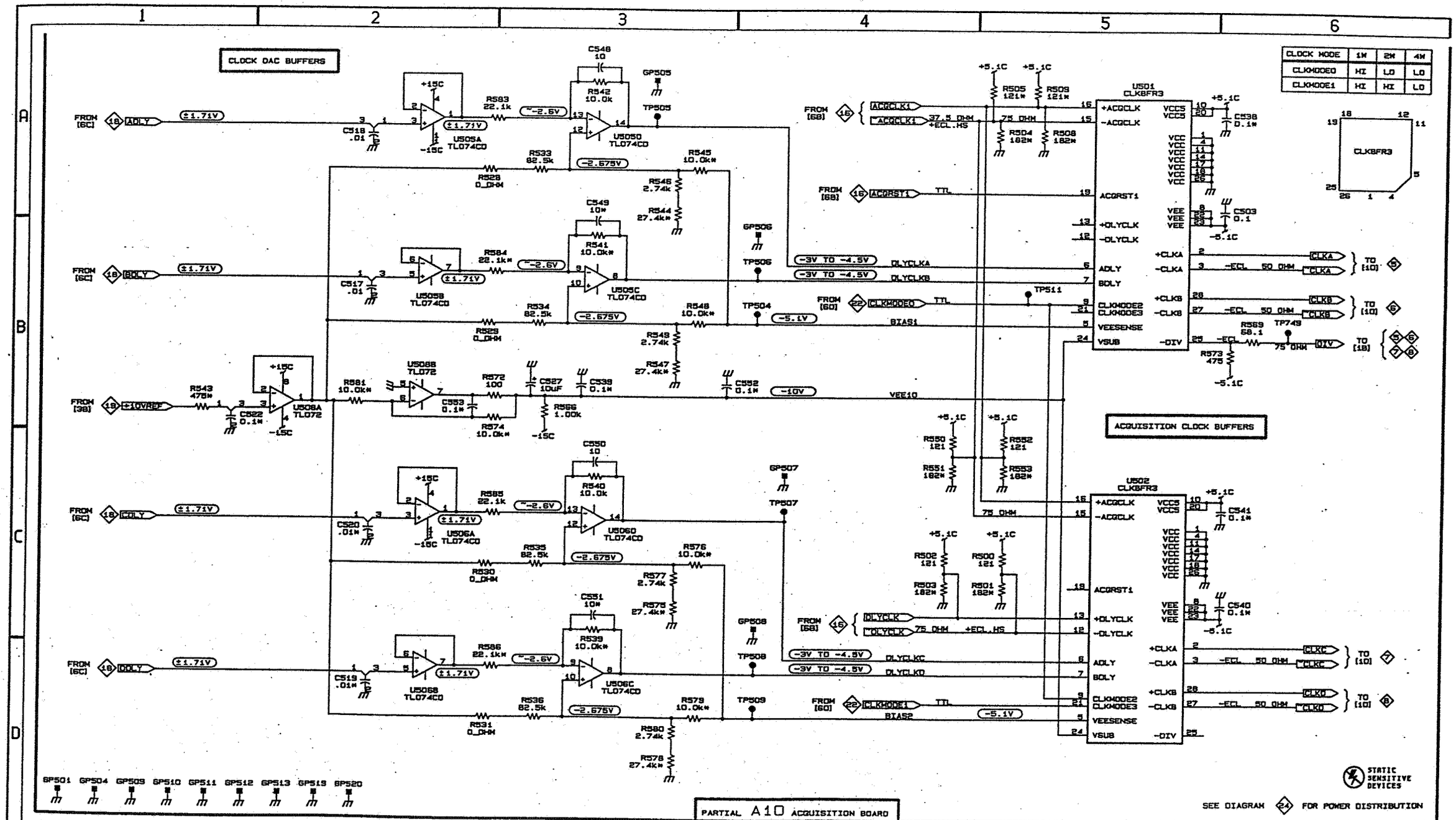

TDS 540

CLOCK DAC BUFFERS & ACQUISITION CLOCKS A10 20

Scan by vintageTEK - Your donations help support the museum - vintagetek.org

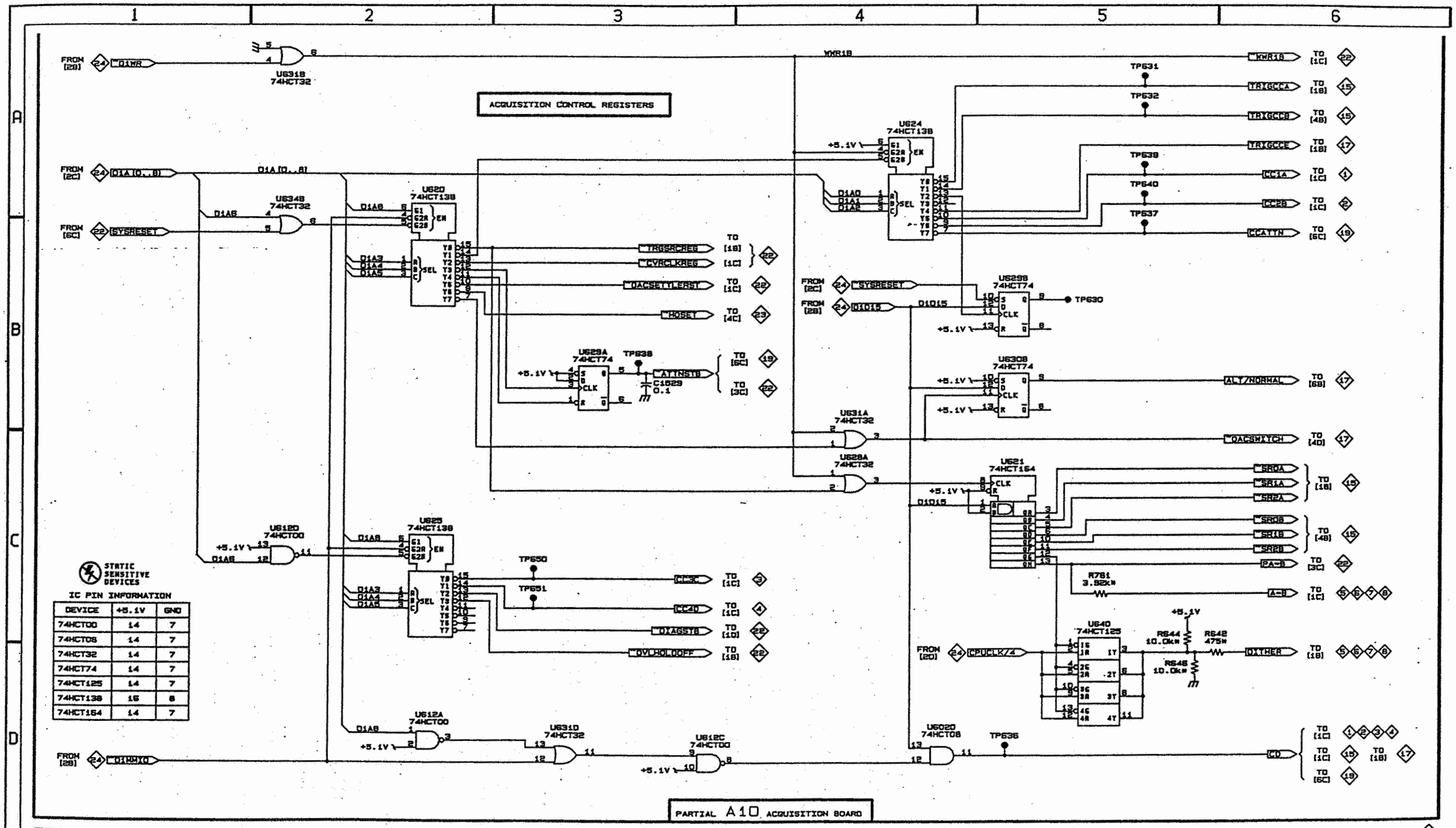

DEVICE	+5.1V	GND
74HCT00	14	7
74HCT08	14	7
74HCT32	14	7
74HCT74	14	7
74HCT125	14	7
74HCT138	16	8
74HCT164	14	7

TDS 540

ACQUISITION DIGITAL CONTROL 1 A10 21

Scan by vintageTEK - Your donations help support the museum - vintagetek.org

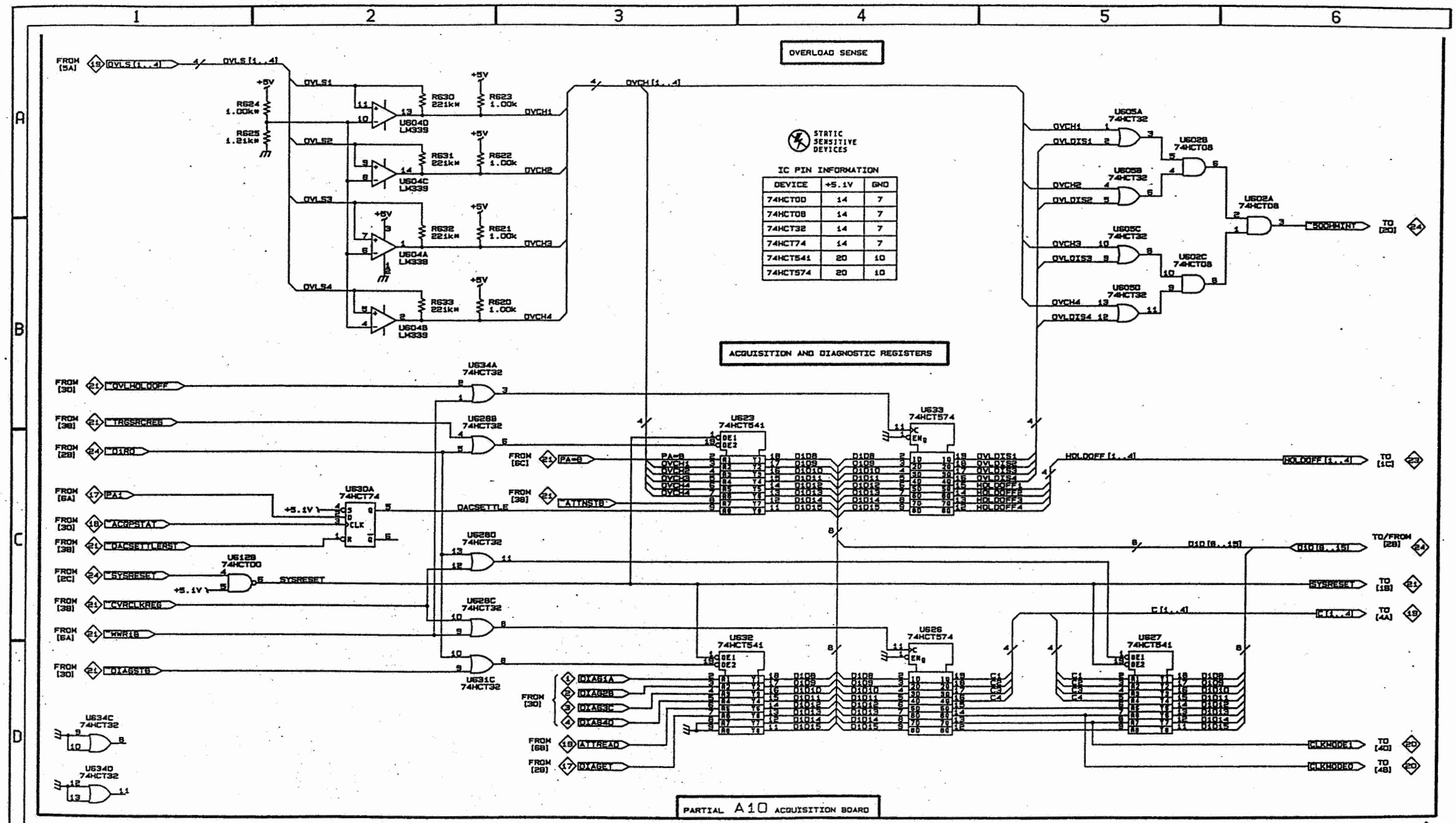

TDS 540

ACQUISITION DIGITAL CONTROL 2 A10 22

Scan by vintageTEK - Your donations help support the museum - vintagetek.org

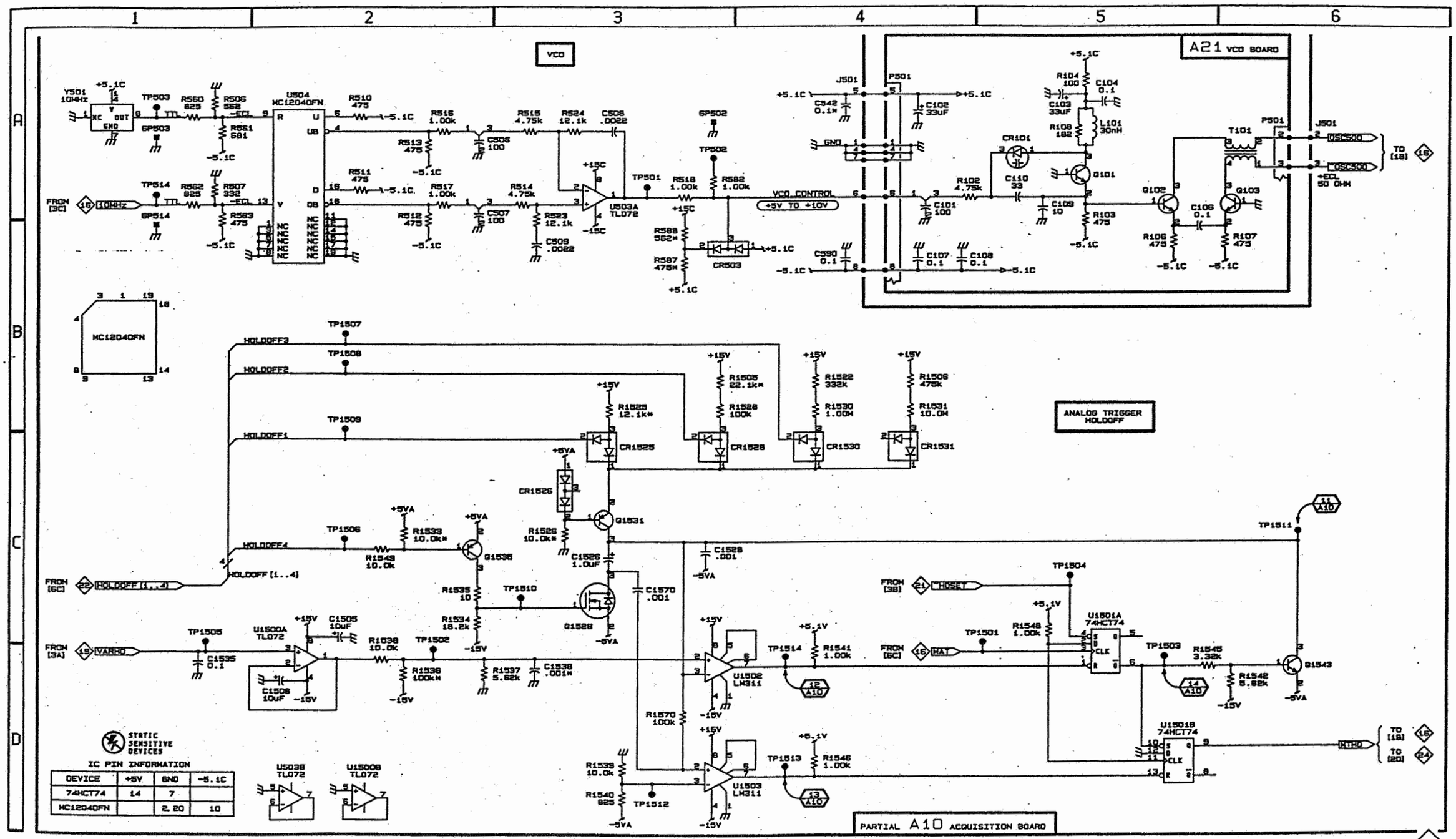

Scan by vintageTEK - Your donations help support the museum - vintagetek.org

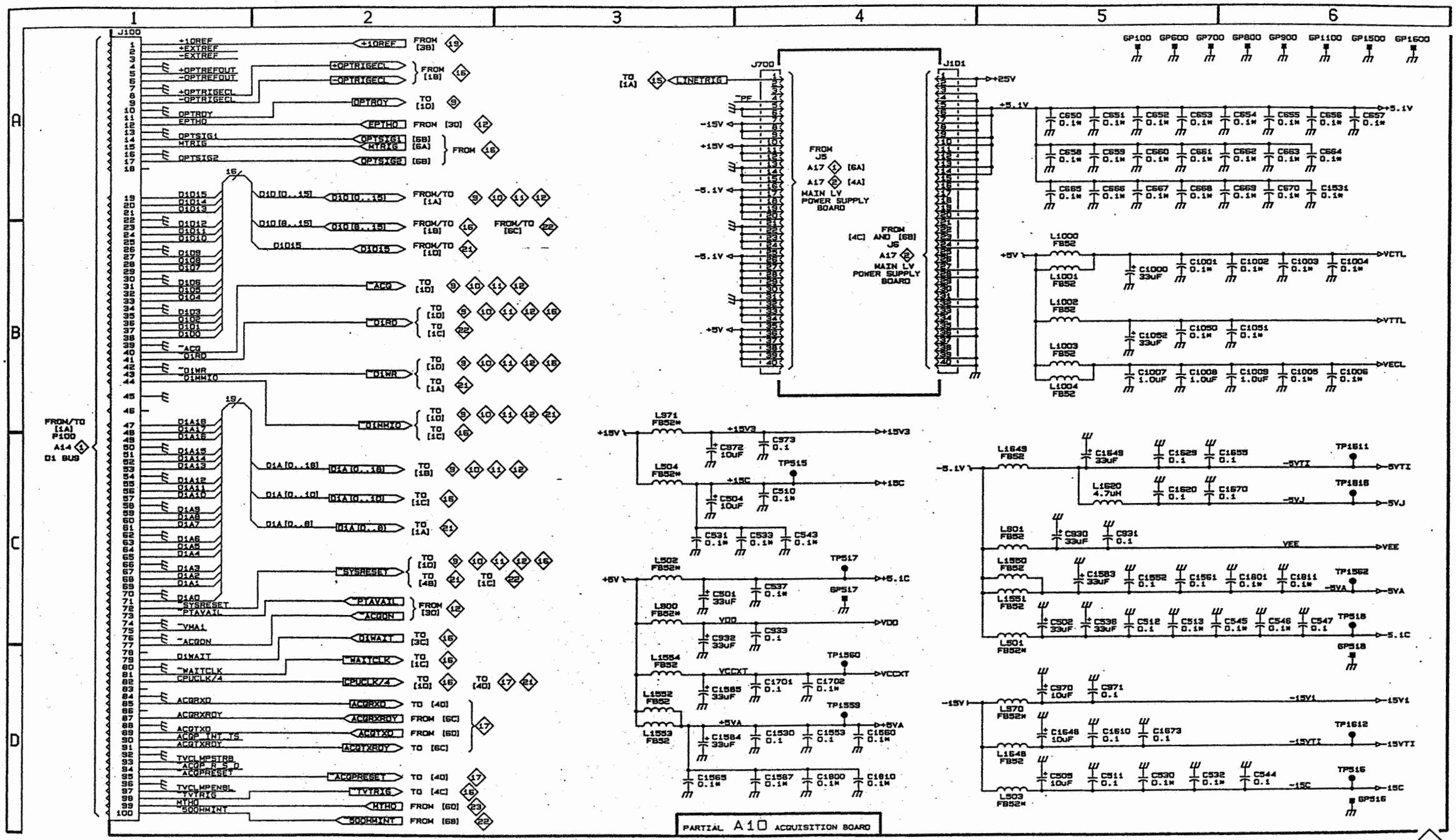

Scan by vintageTEK - Your donations help support the museum - vintagetek.org

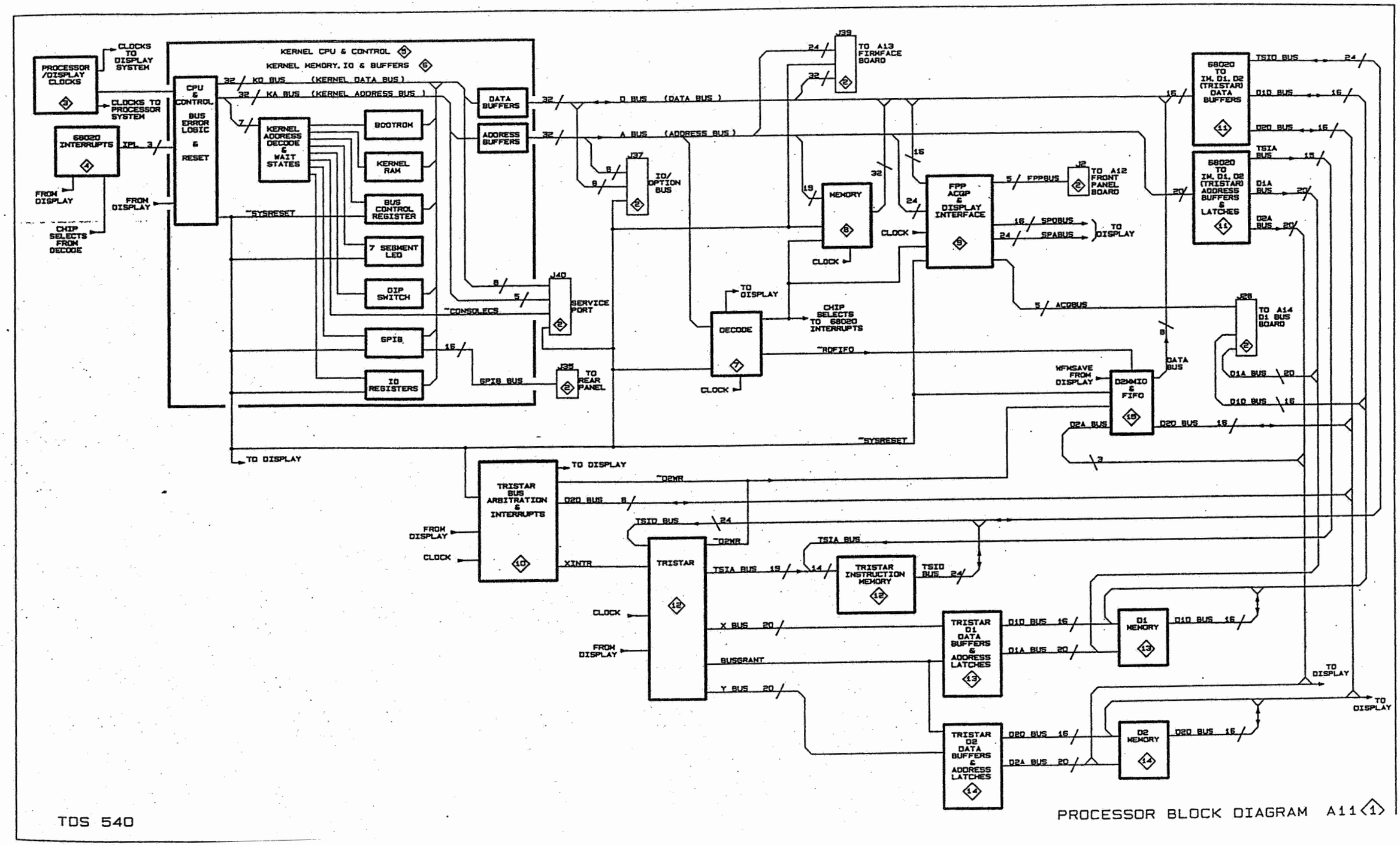

TDS 540

PROCESSOR BLOCK DIAGRAM A11 1

Scan by vintageTEK - Your donations help support the museum - vintagetek.org

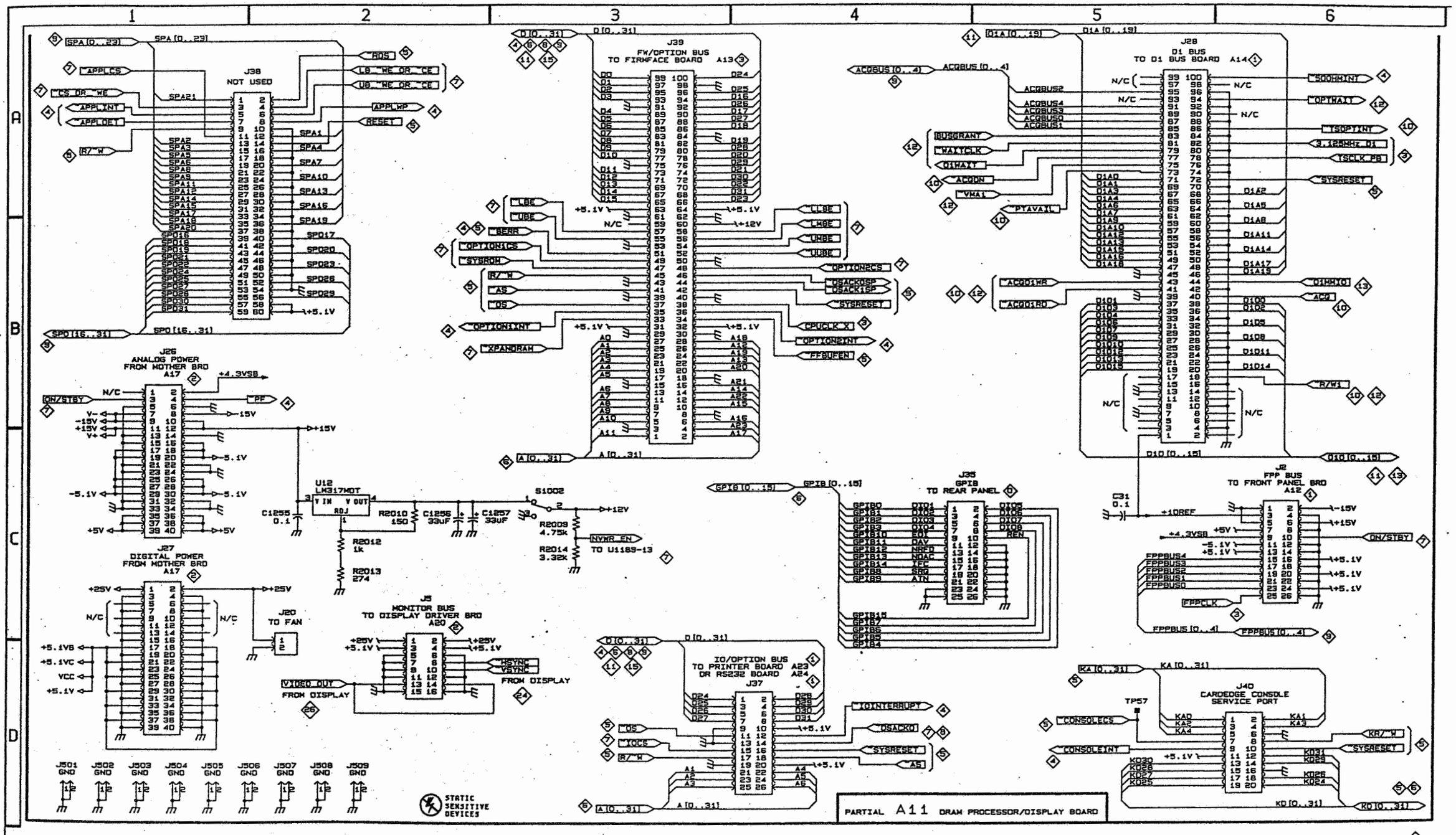

Scan by vintageTEK - Your donations help support the museum - vintagetek.org

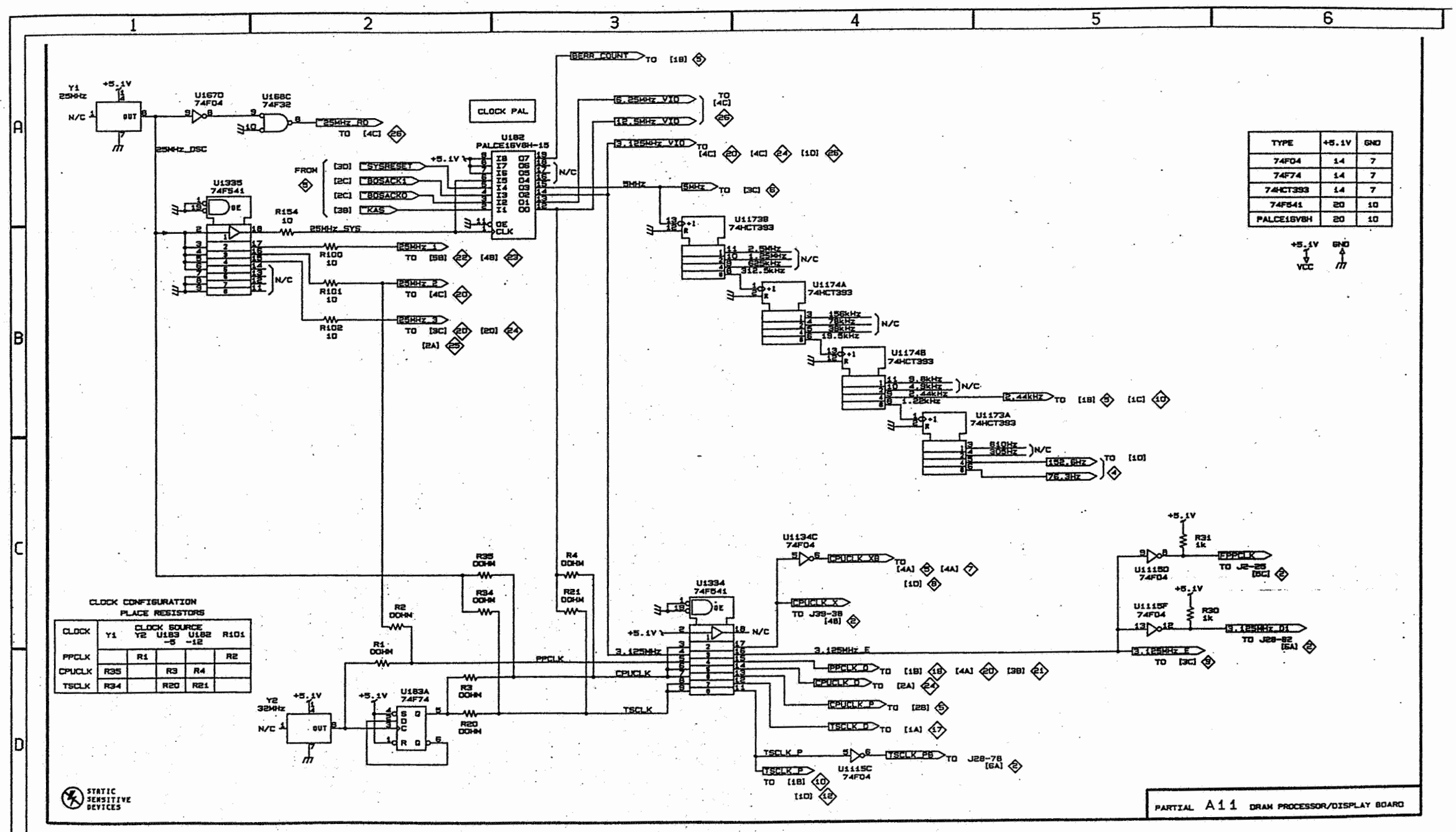

Scan by vintageTEK - Your donations help support the museum - vintagetek.org

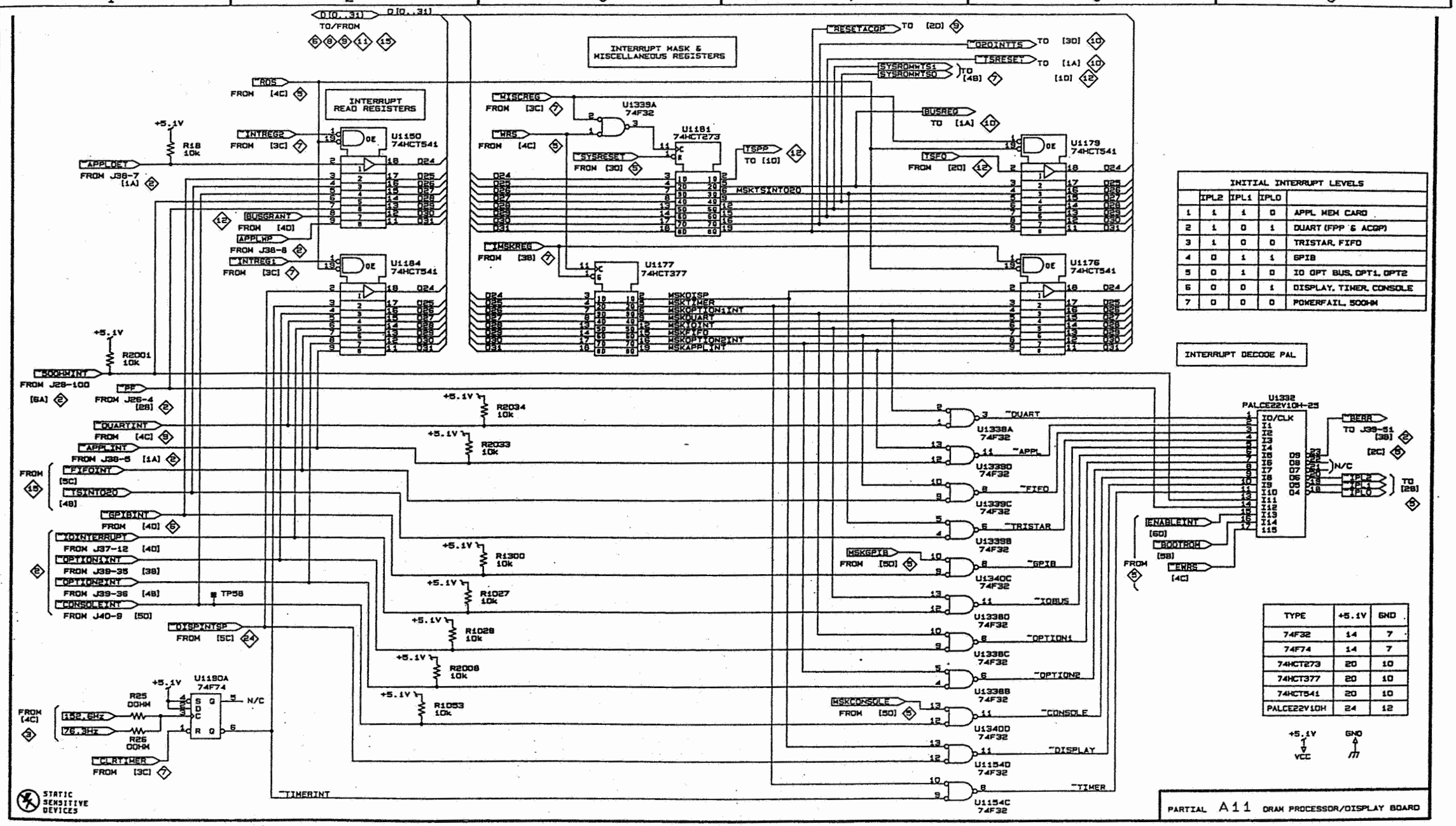

INITIAL INTERRUPT LEVELS				
	IPL2	IPL1	IPL0	
1	1	1	0	APPL MEM CARD
2	1	0	1	DUART (FPP & ACGP)
3	1	0	0	TRISTAR, FIFO
4	0	1	1	GPIB
5	0	1	0	IO OPT BUS, OPT1, OPT2
6	0	0	1	DISPLAY, TIMER, CONSOLE
7	0	0	0	POWERFAIL, 500HM

INTERRUPT DECODE PAL

TYPE	+5.1V	GND
74F32	14	7
74F74	14	7
74HCT273	20	10
74HCT377	20	10
74HCT541	20	10
PALCE22V10H	24	12

Scan by vintageTEK - Your donations help support the museum - vintagetek.org

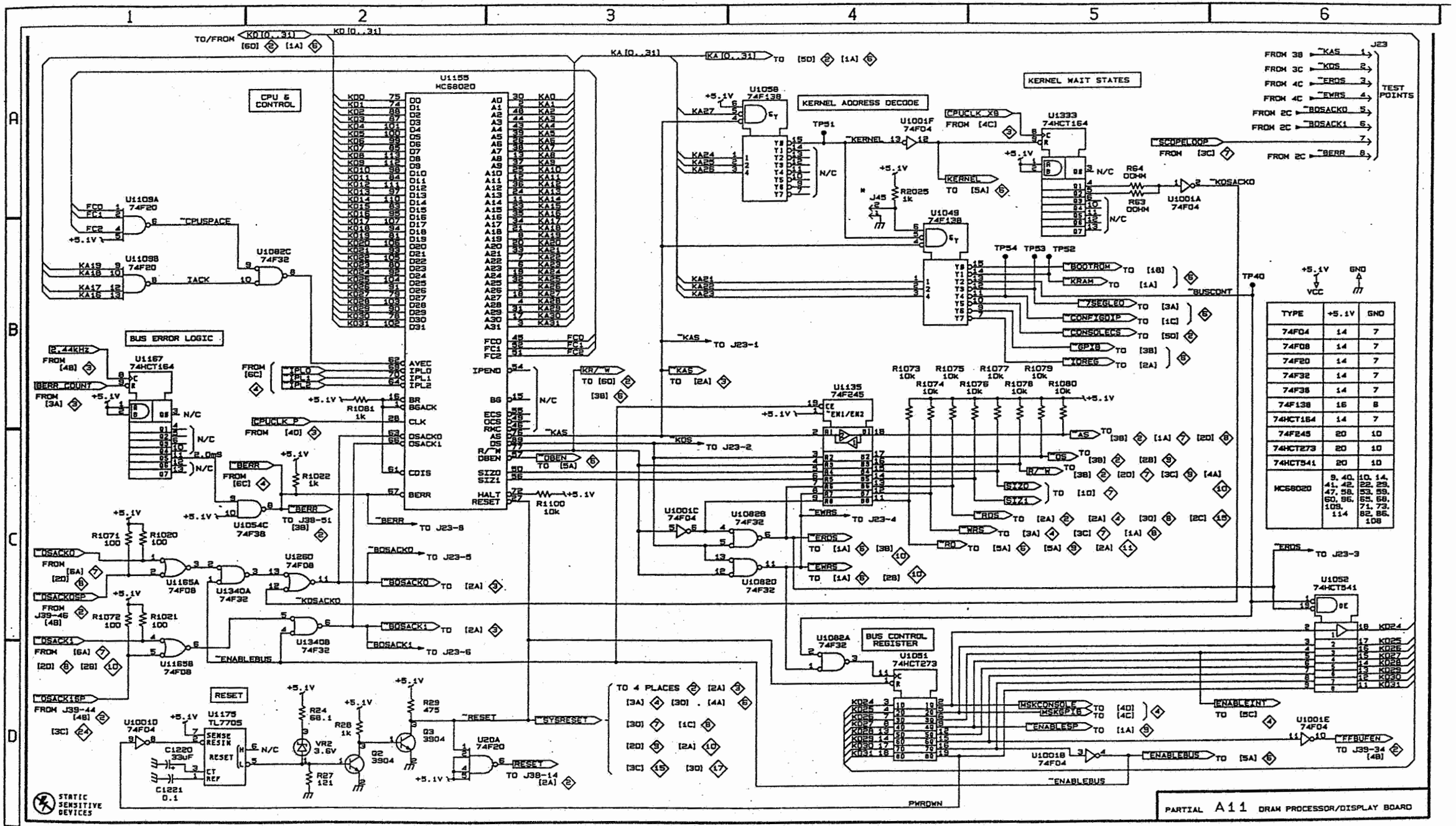

TYPE	+5.1V	GND
74F04	14	7
74F08	14	7
74F20	14	7
74F32	14	7
74F38	14	7
74F138	16	8
74HCT164	14	7
74F245	20	10
74HCT273	20	10
74HCT541	20	10
HC68020	9, 40, 41, 42, 47, 58, 60, 96, 109, 114	10, 14, 22, 29, 53, 59, 65, 68, 71, 73, 82, 86, 108

Scan by vintageTEK - Your donations help support the museum - vintagetek.org

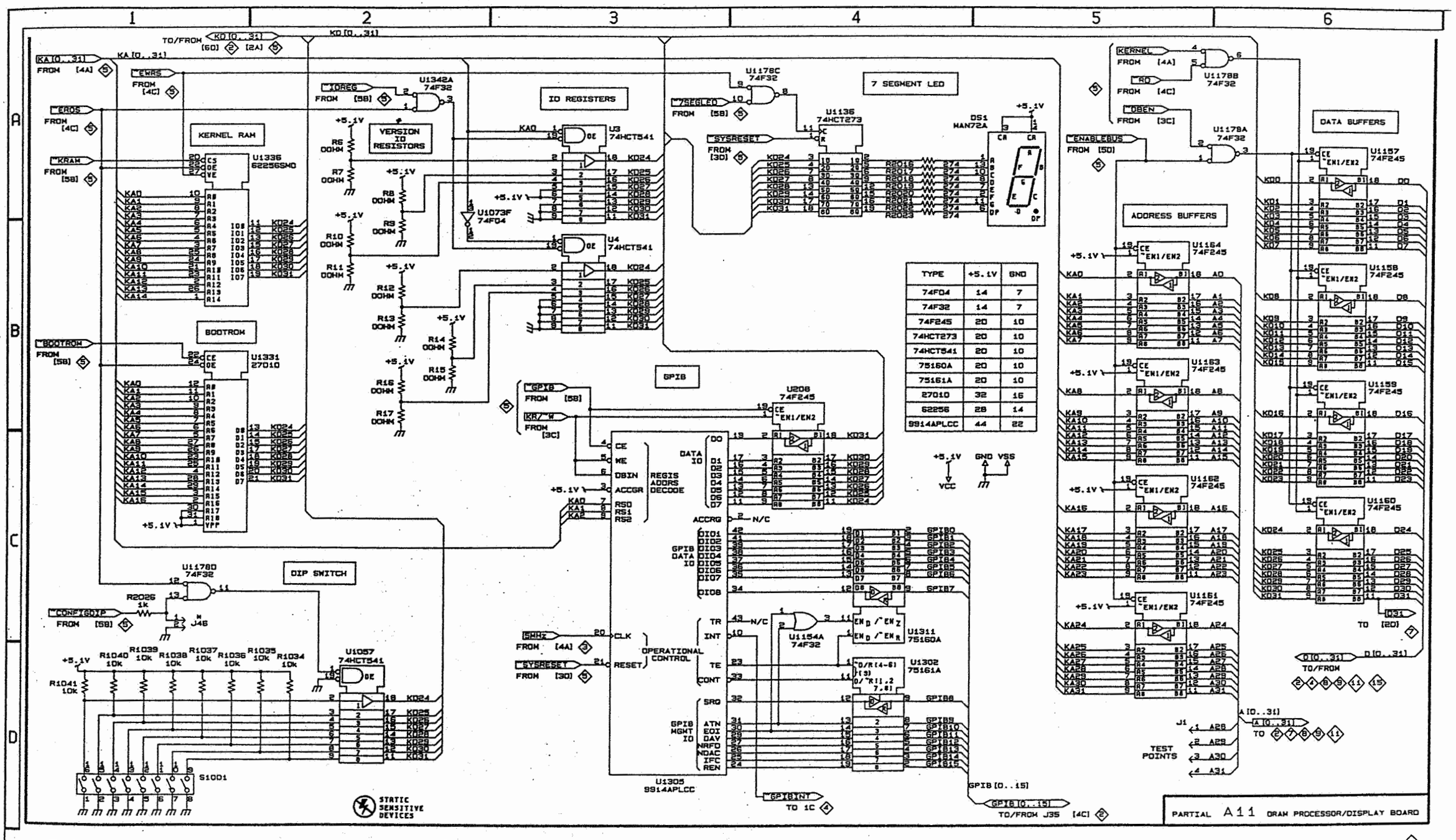

TYPE	+5.1V	GND
74F04	14	7
74F32	14	7
74F245	20	10
74HCT273	20	10
74HCT541	20	10
75160A	20	10
75161A	20	10
27010	32	16
62256	28	14
9914APLCC	44	22

TDS 540

*VERSION ID RESISTOR PLACEMENT:
PLACE U4 & R12-R17 ONLY ON BOARDS
THAT HAVE EXCEEDED THE ID NUMBER 11110XXX.

KERNEL MEMORY, IO & BUFFERS A11 6

Scan by vintageTEK - Your donations help support the museum - vintagetek.org

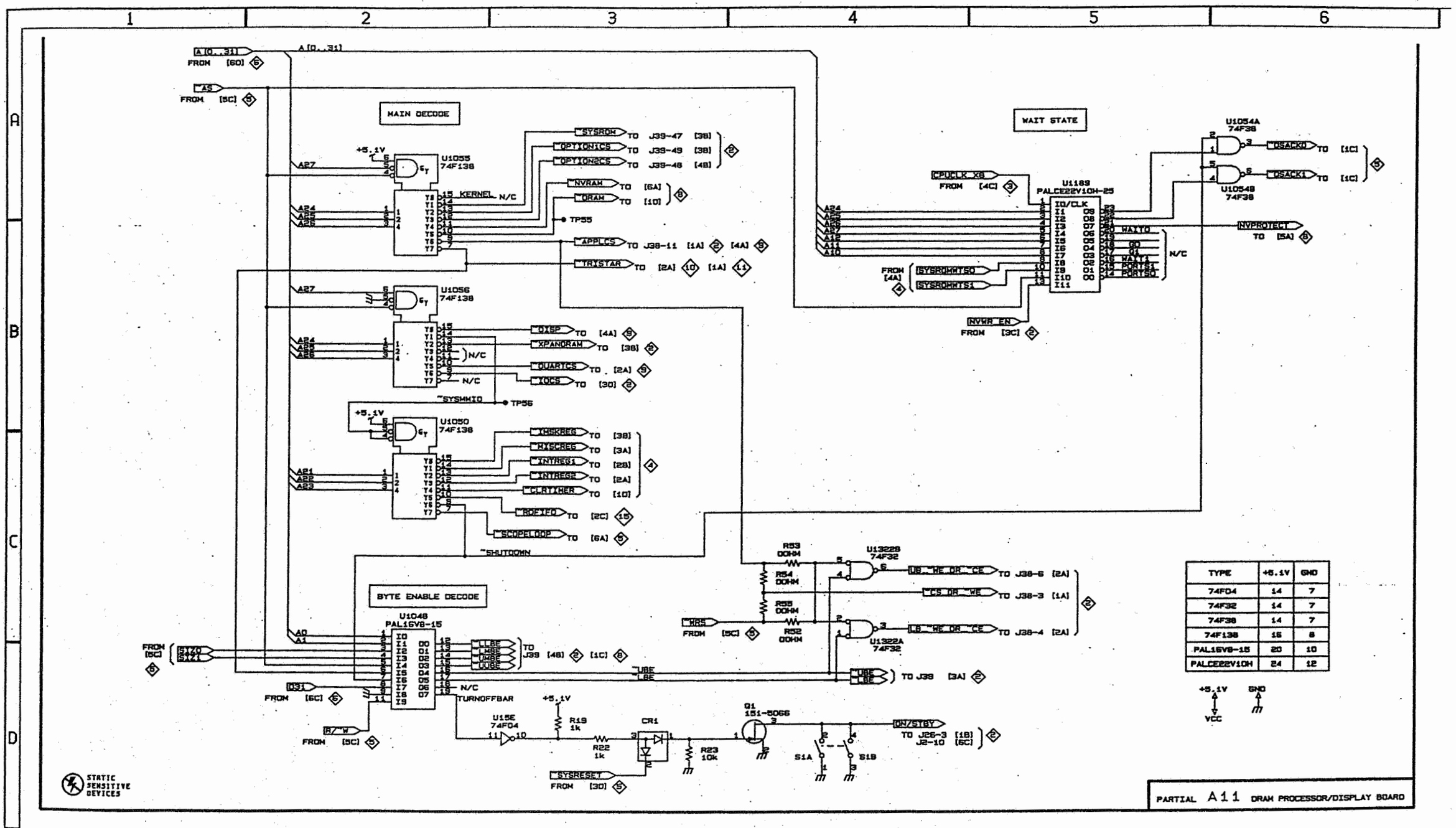

TYPE	+5.1V	GND
74FD4	14	7
74F32	14	7
74F38	14	7
74F138	16	8
PAL16V8-15	20	10
PALCE22V10H	24	12

Scan by vintageTEK - Your donations help support the museum - vintagetek.org

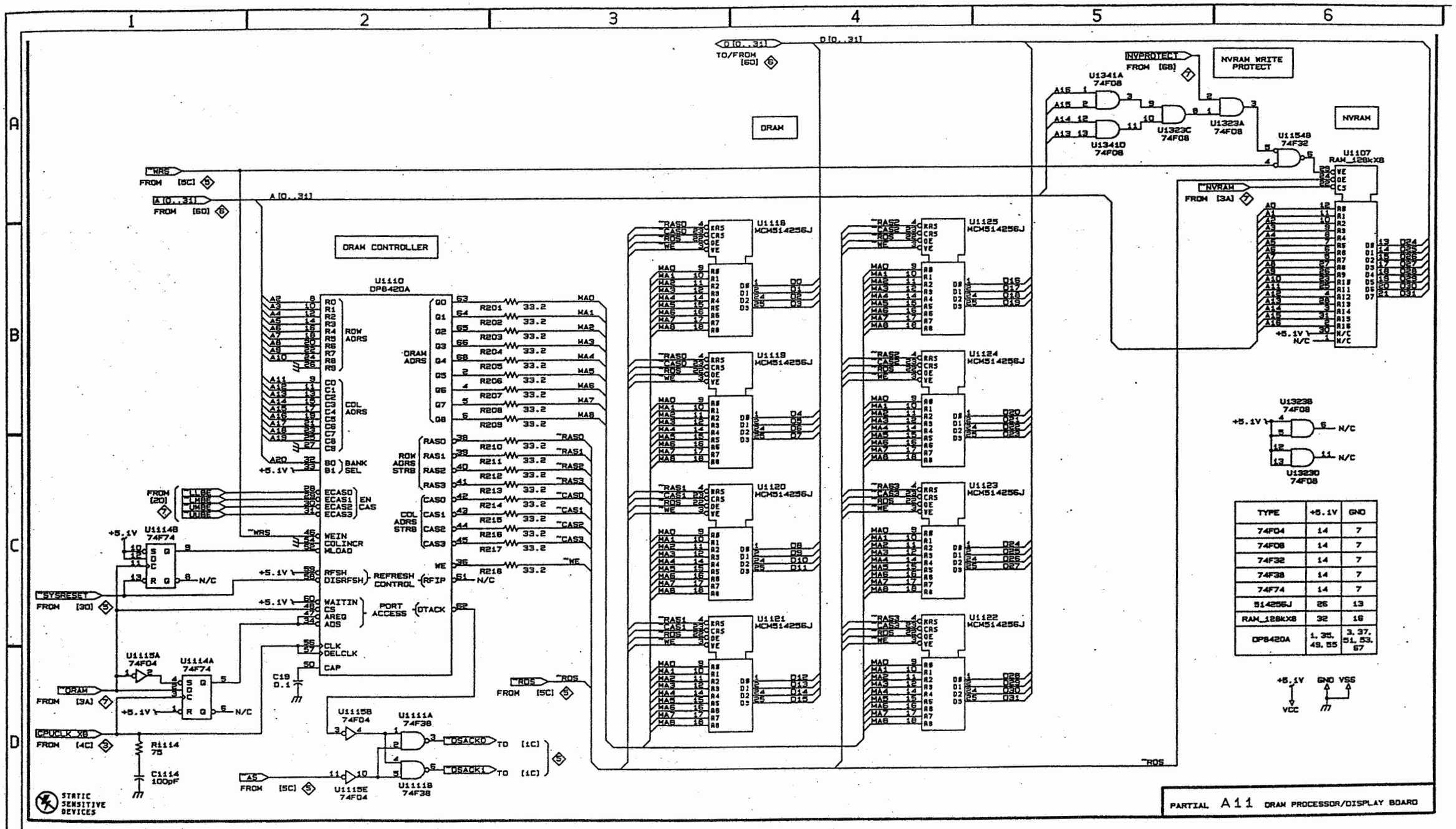

TYPE	+5.1V	GND
74F04	14	7
74F08	14	7
74F32	14	7
74F38	14	7
74F74	14	7
514256J	26	13
RAM_128kX8	32	16
DP8420A	1, 35, 49, 55	3, 37, 51, 53, 67

TDS 540

MEMORY A11 8

Scan by vintageTEK - Your donations help support the museum - vintagetek.org

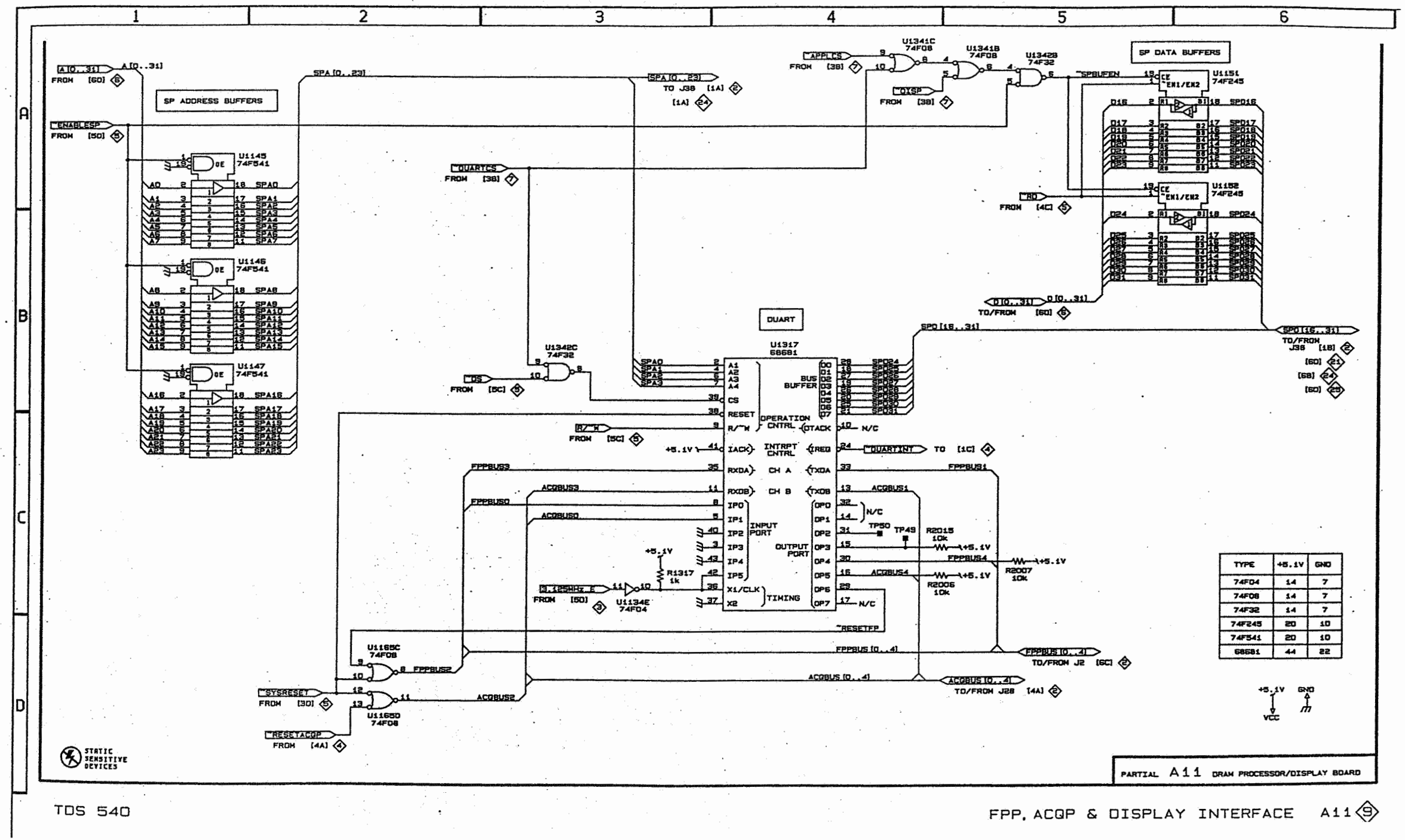

TYPE	+5.1V	GND
74F04	14	7
74F08	14	7
74F32	14	7
74F245	20	10
74F541	20	10
68681	44	22

TDS 540

FPP, ACQP & DISPLAY INTERFACE A11 9

Scan by vintageTEK - Your donations help support the museum - vintagetek.org

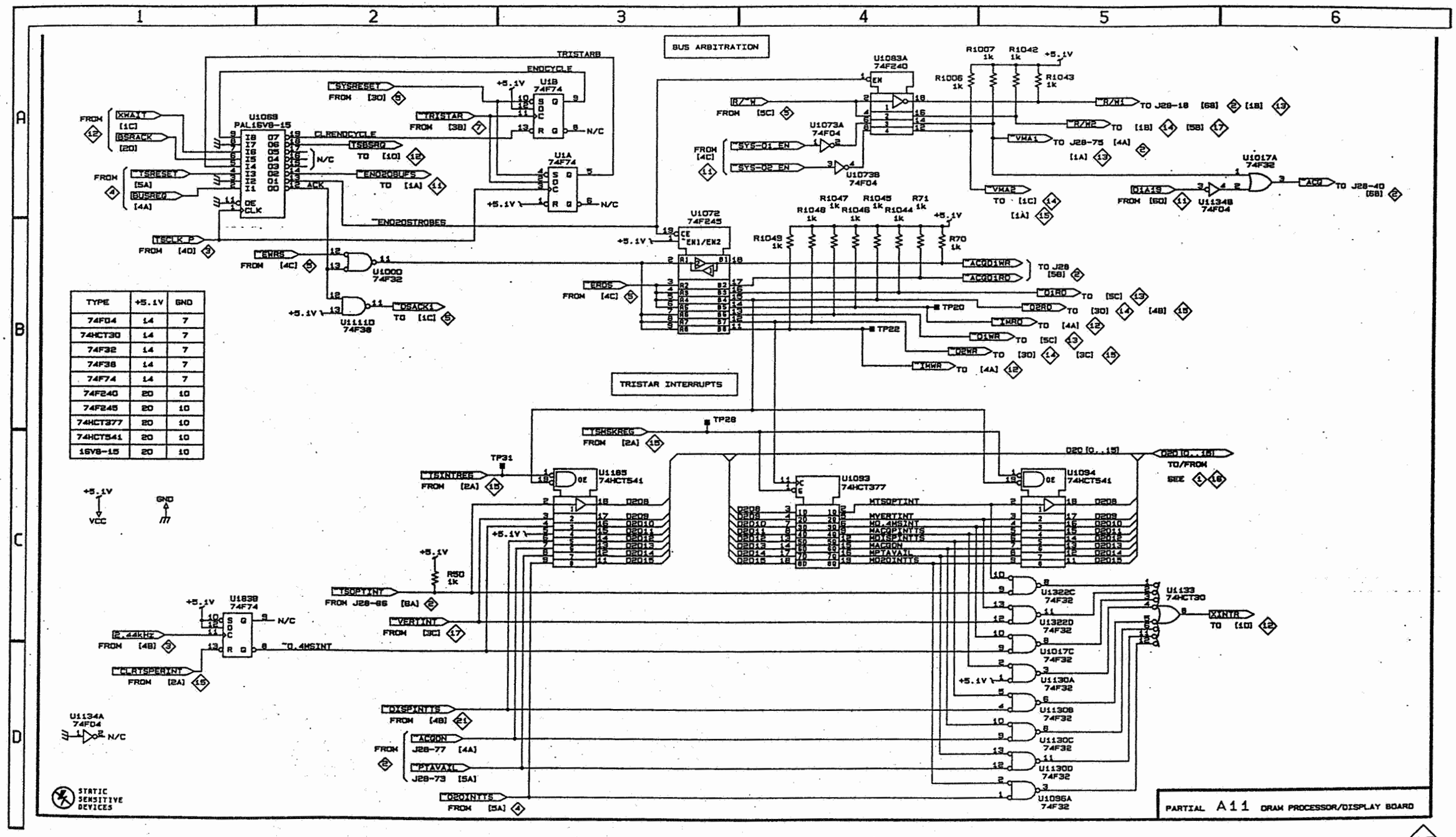

TYPE	+5.1V	GND
74F04	14	7
74HCT30	14	7
74F32	14	7
74F38	14	7
74F74	14	7
74F240	20	10
74F245	20	10
74HCT377	20	10
74HCT541	20	10
16V8-15	20	10

Scan by vintageTEK - Your donations help support the museum - vintagetek.org

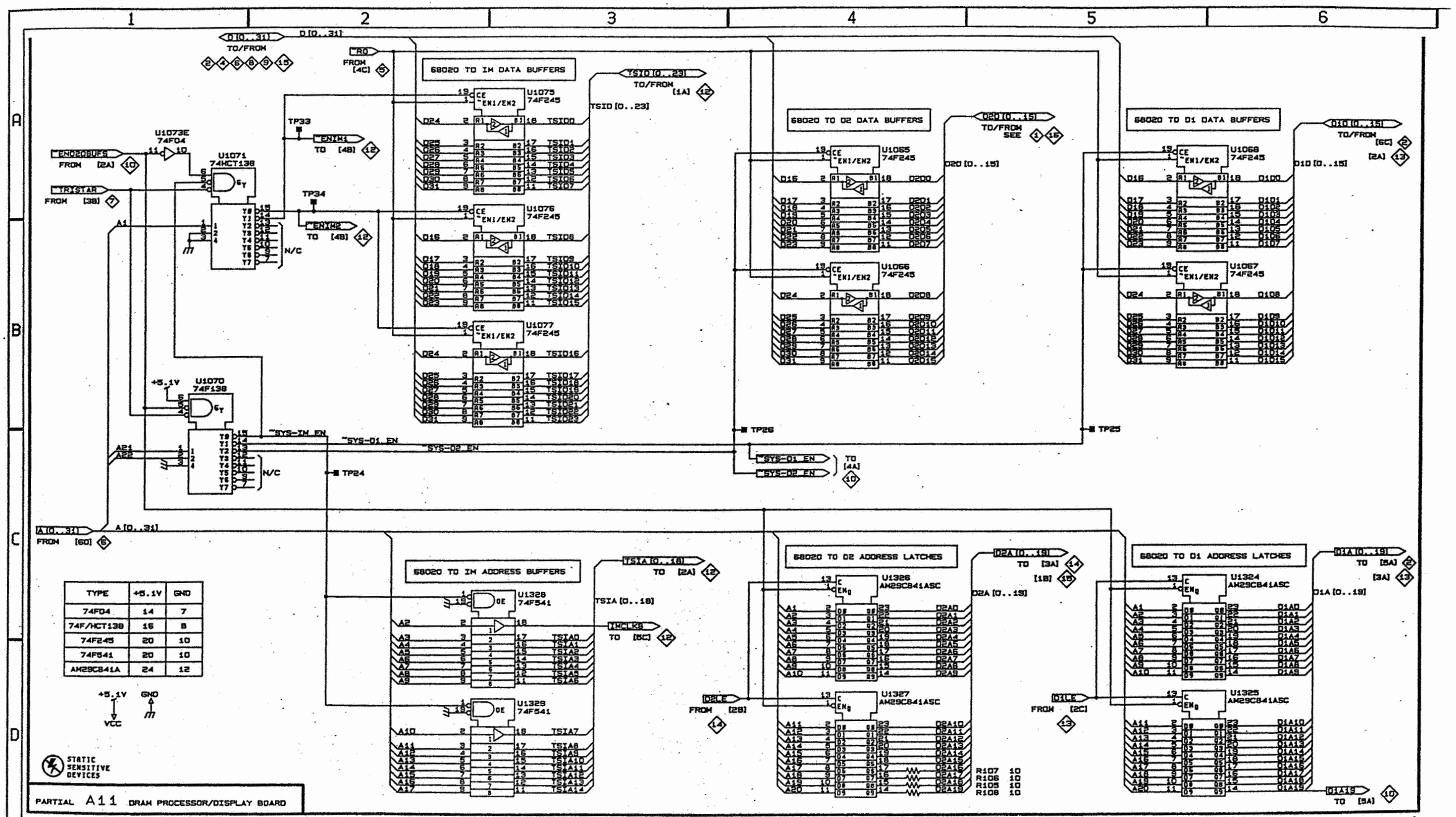

TYPE	+5.1V	GND
74F04	14	7
74F/HCT138	16	8
74F245	20	10
74F541	20	10
AM29C841A	24	12

Scan by vintageTEK - Your donations help support the museum - vintagetek.org

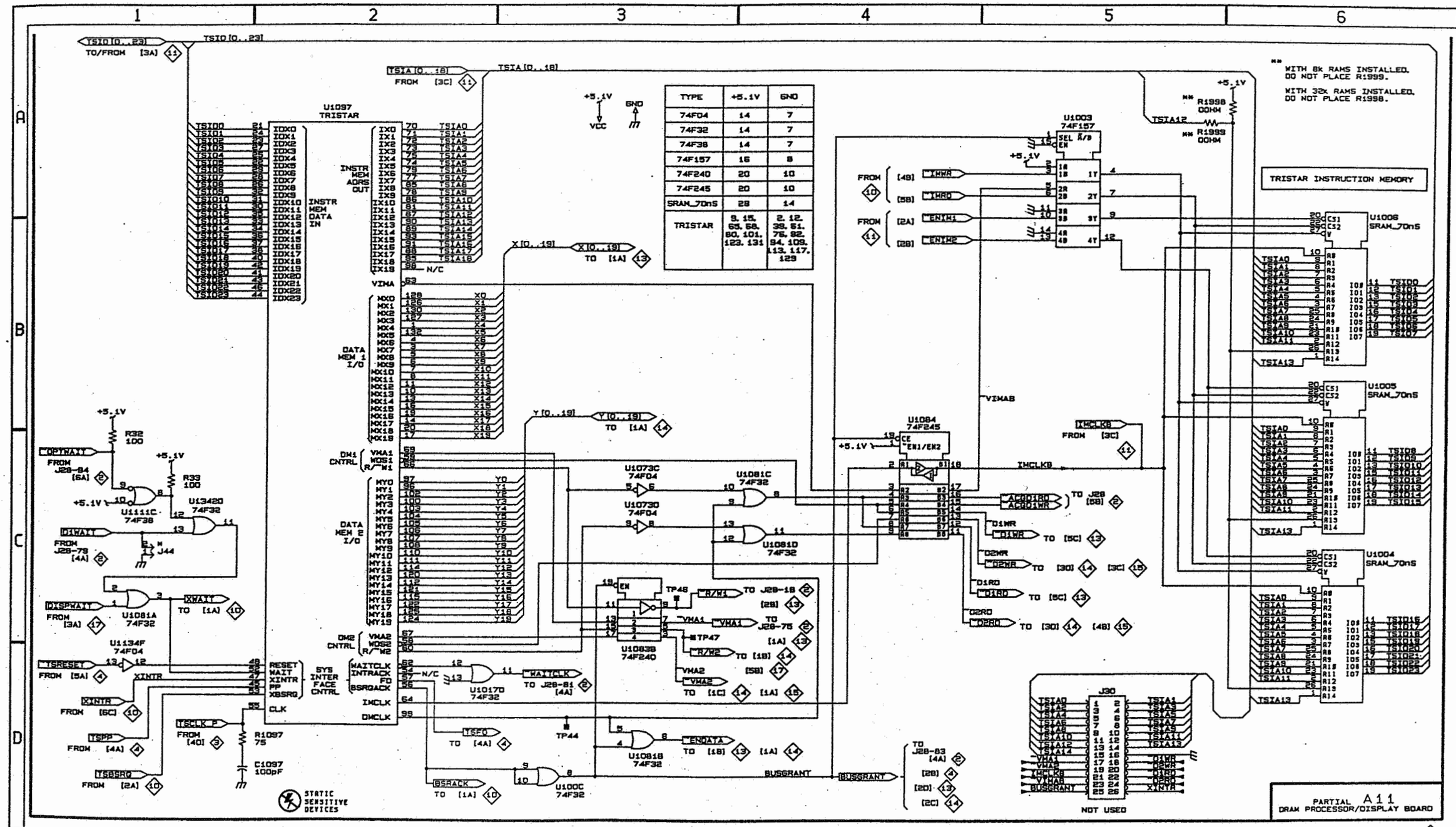

TYPE	+5.1V	GND
74F04	14	7
74F32	14	7
74F38	14	7
74F157	16	8
74F240	20	10
74F245	20	10
SRAM_70nS	28	14
TRISTAR	9, 15, 65, 68, 80, 101, 123, 131	2, 12, 39, 51, 76, 82, 94, 109, 113, 117, 129

TDS 540

TRISTAR & INSTRUCTION MEMORY A11 12

J44: INSTALL JUMPER TO TWWAIT TRISTAR WAITS

Scan by vintageTEK - Your donations help support the museum - vintagetek.org

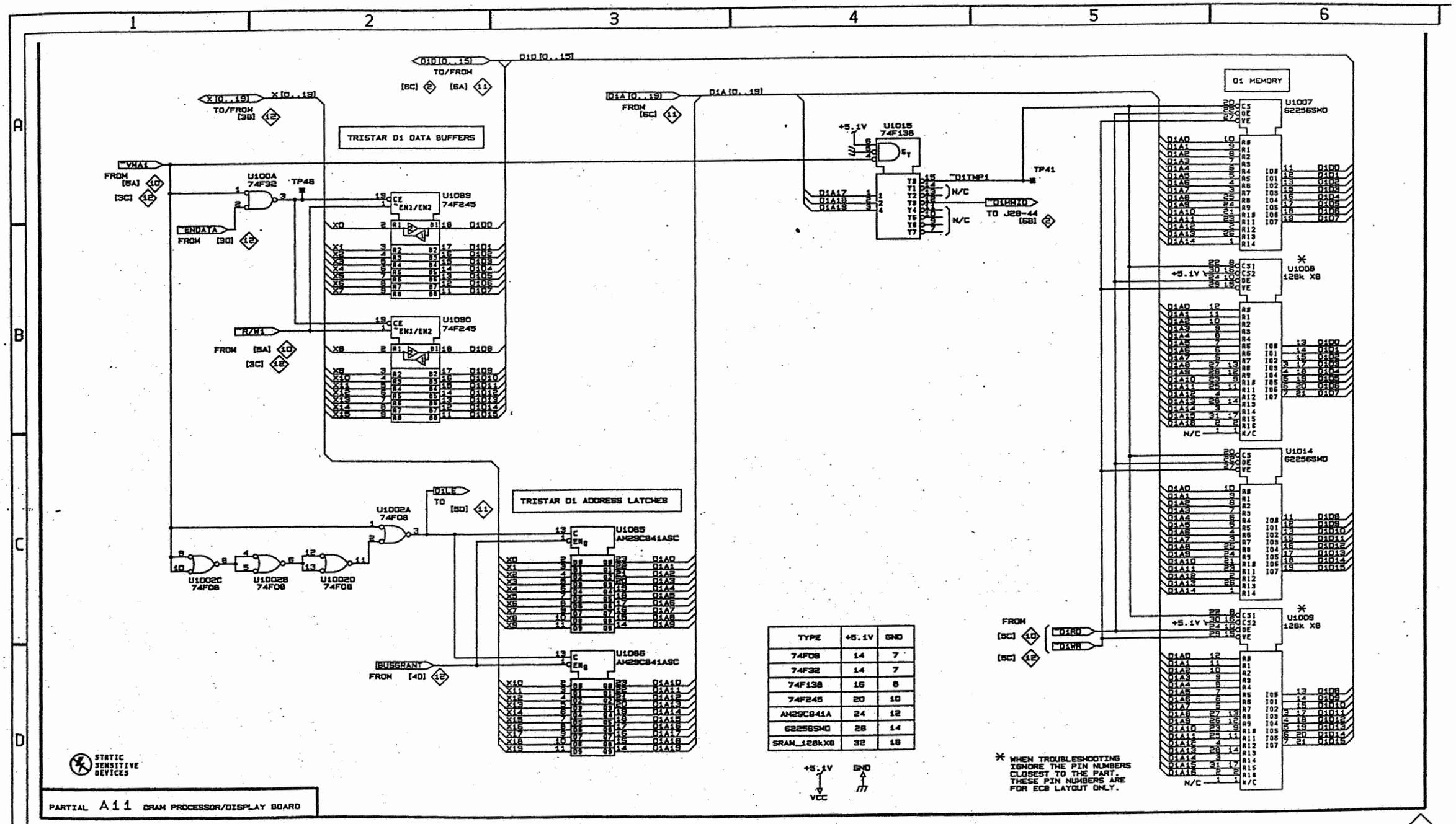

TYPE	+5.1V	GND
74F08	14	7
74F32	14	7
74F138	16	8
74F245	20	10
AN29C841A	24	12
62256SMO	28	14
SRAM_128kX8	32	16

TDS 540

TRISTAR D1 BUFFERS, LATCHES & MEMORY

A11 13

Scan by vintageTEK - Your donations help support the museum - vintagetek.org

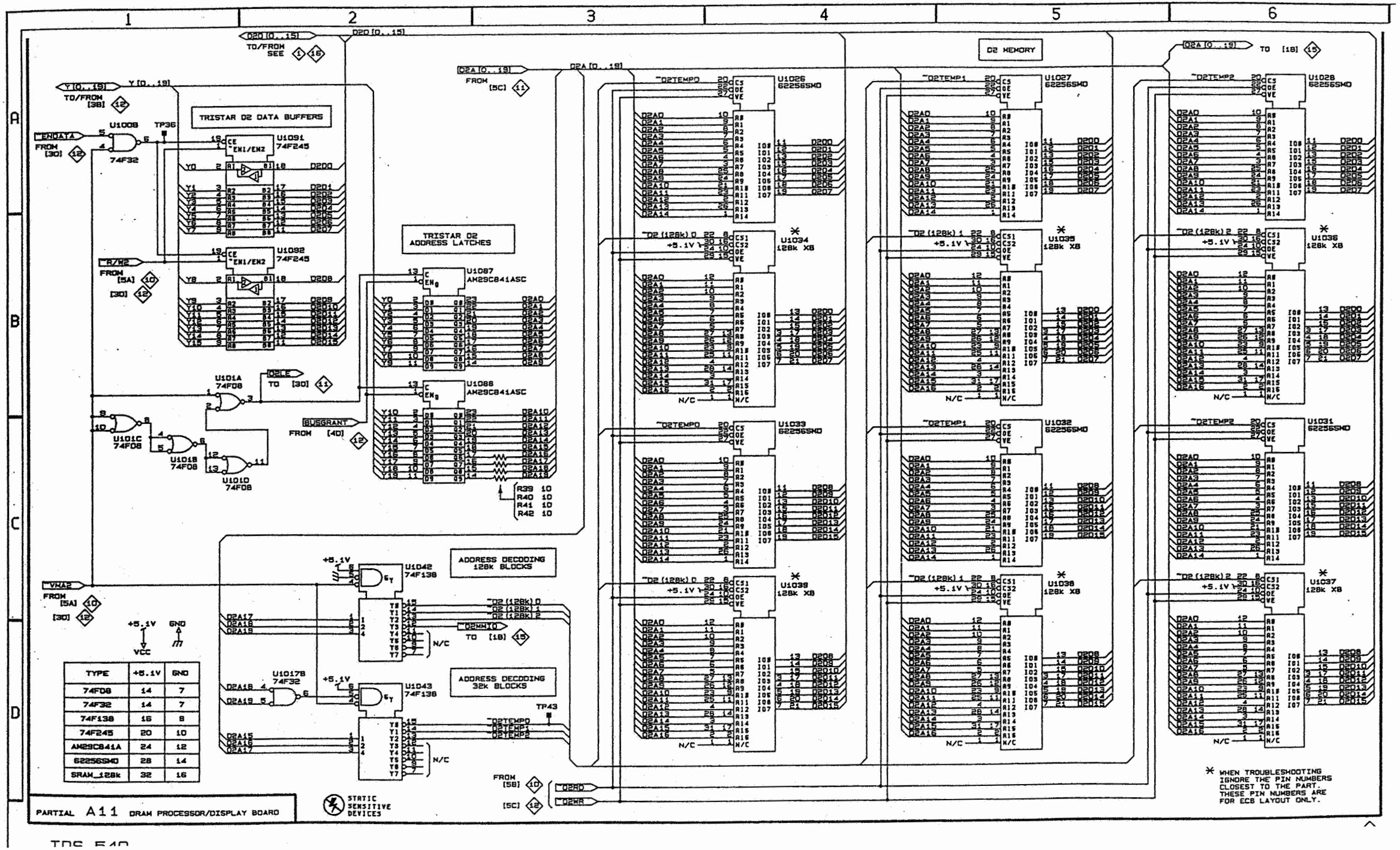

TYPE	+5.1V	GND
74F08	14	7
74F32	14	7
74F138	16	8
74F245	20	10
AM29C841A	24	12
62256SMD	28	14
SRAM_128k	32	16

Scan by vintageTEK - Your donations help support the museum - vintagetek.org

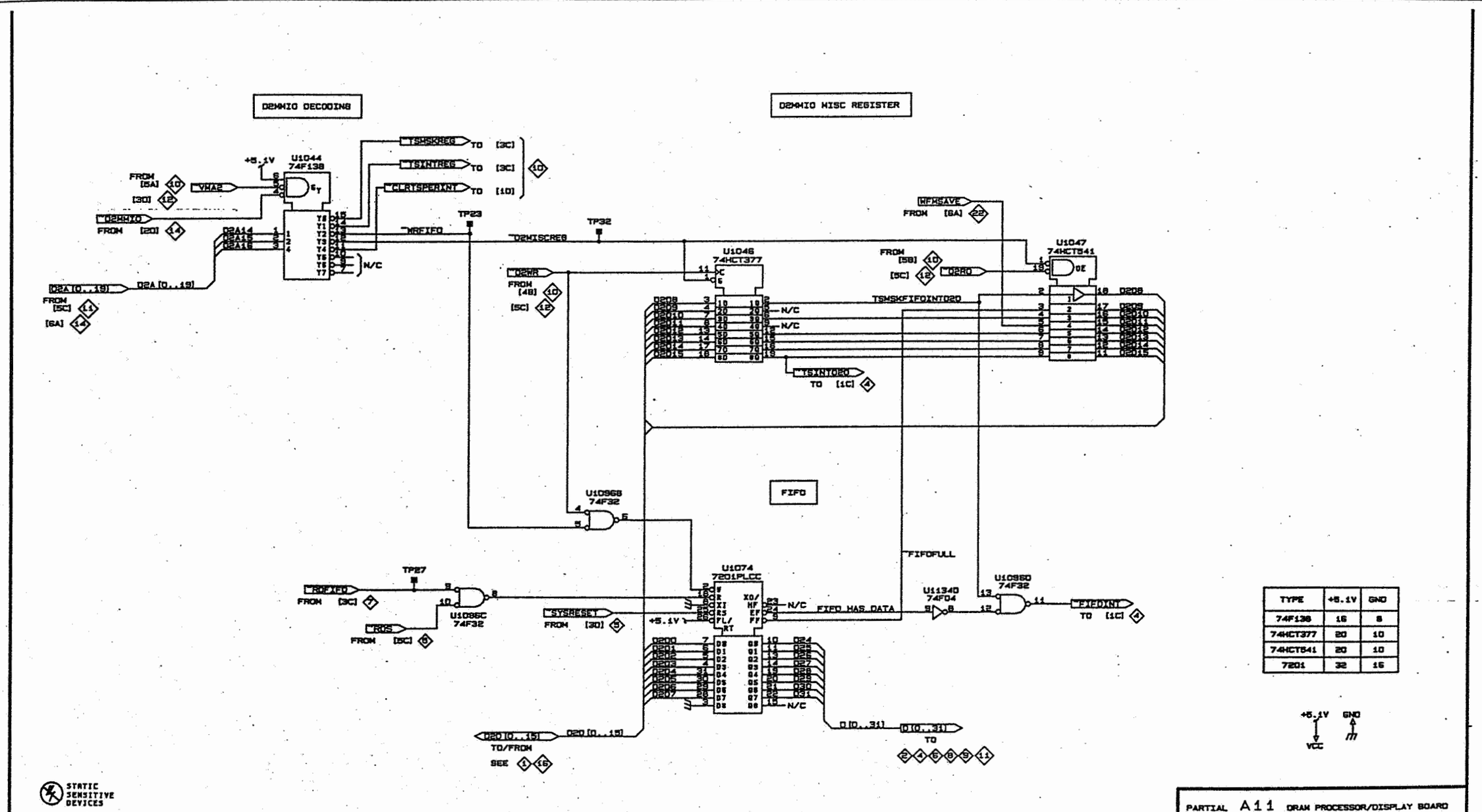

TYPE	+5.1V	GND
74F138	16	8
74HCT377	20	10
74HCT541	20	10
7201	32	16

TDS 540

D2MMIO & FIFO

A11 15

Scan by vintageTEK - Your donations help support the museum - vintagetek.org

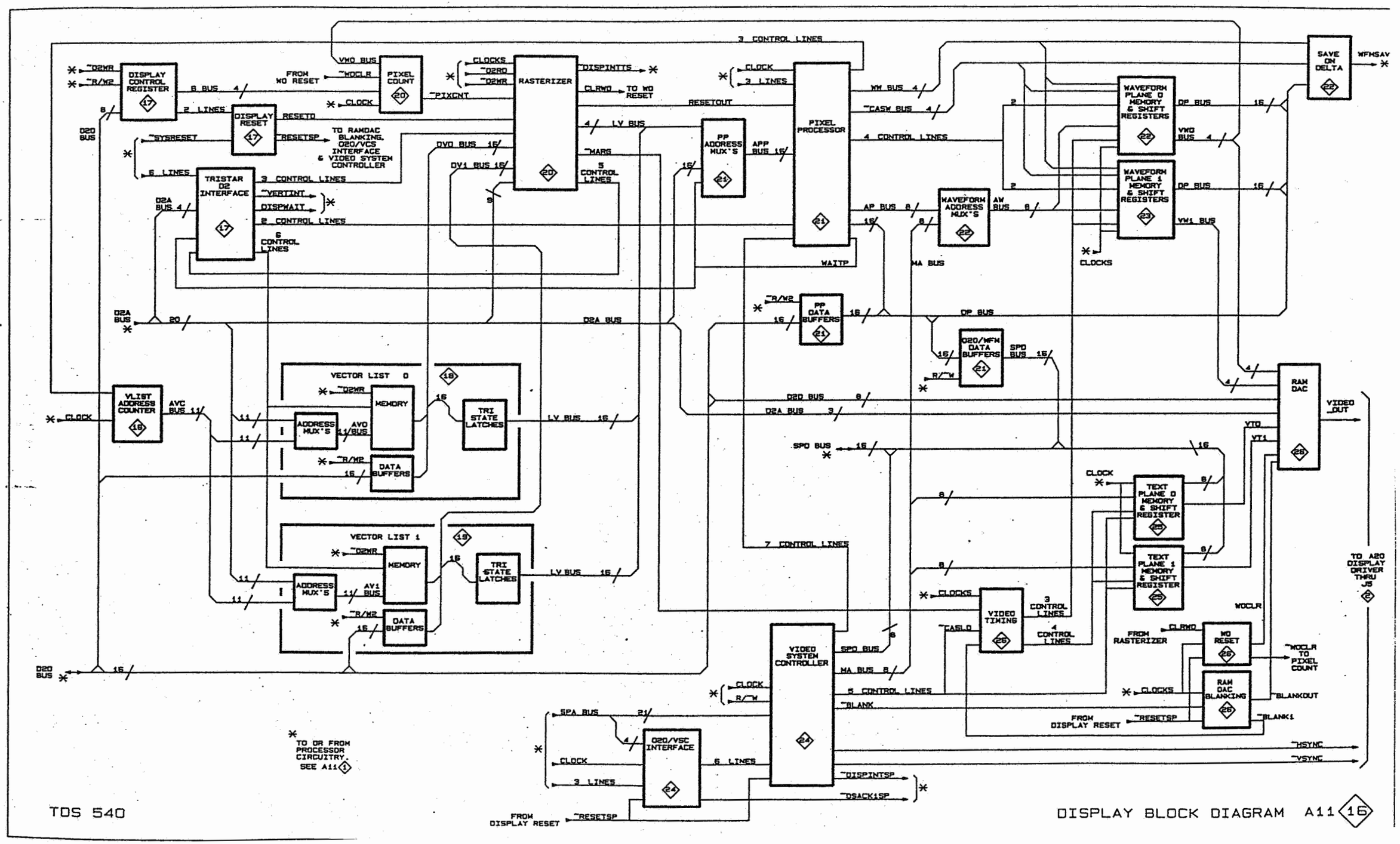

Scan by vintageTEK - Your donations help support the museum - vintagetek.org

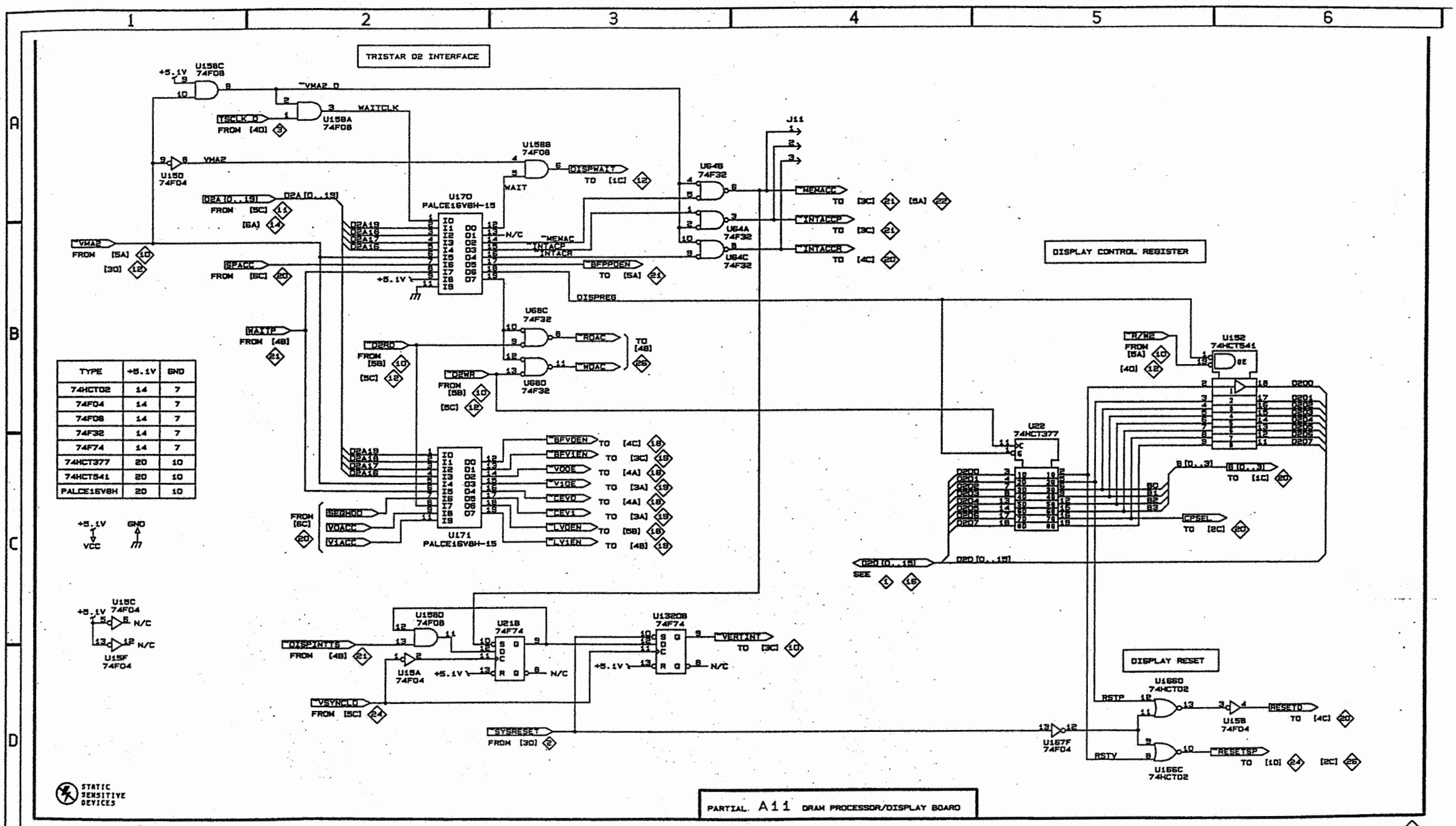

TYPE	+5.1V	GND
74HCT02	14	7
74F04	14	7
74F08	14	7
74F32	14	7
74F74	14	7
74HCT377	20	10
74HCT541	20	10
PALCE16V8H	20	10

Scan by vintageTEK - Your donations help support the museum - vintagetek.org

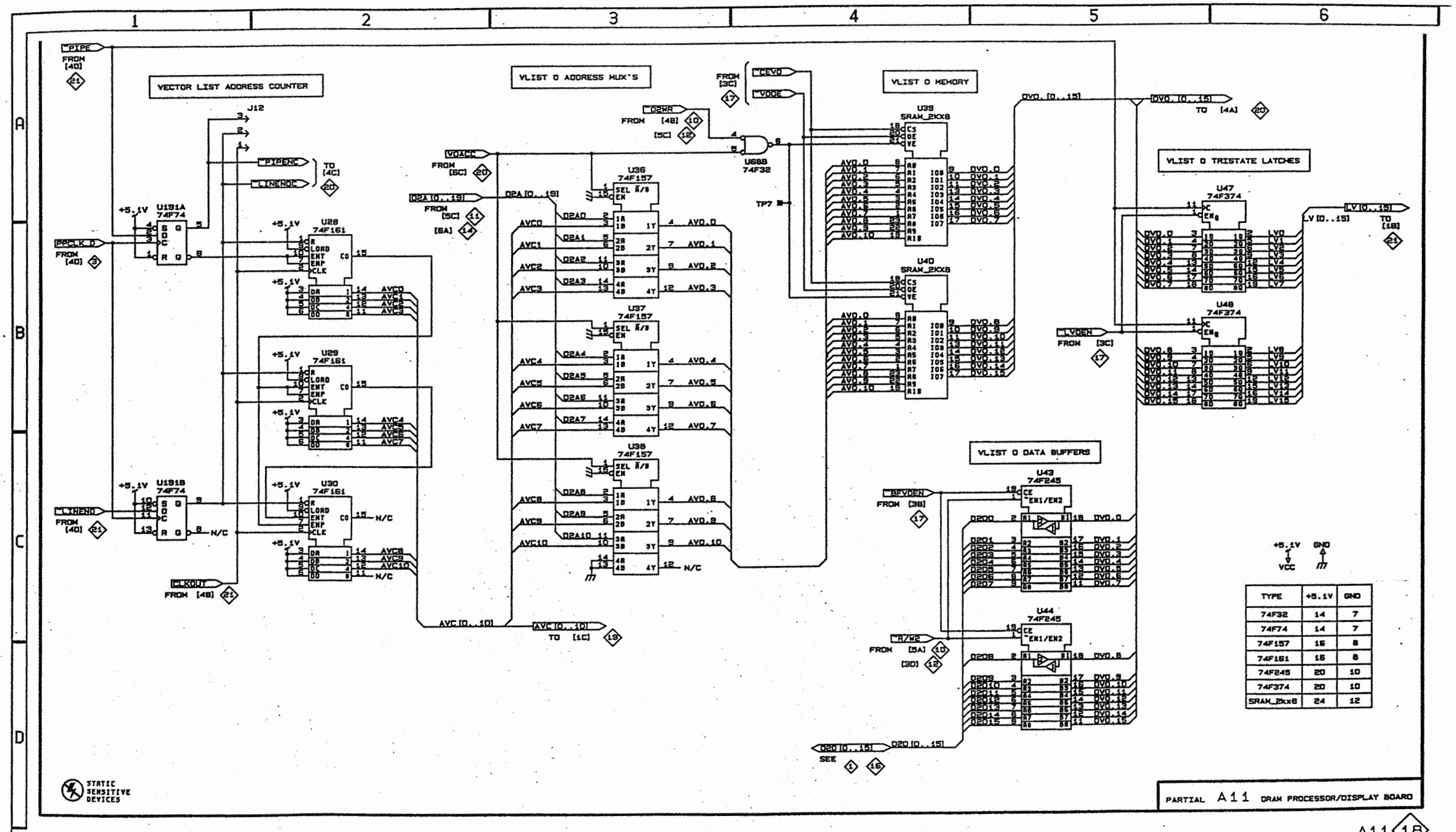

TYPE	+5.1V	GND
74F32	14	7
74F74	14	7
74F157	16	8
74F161	16	8
74F245	20	10
74F374	20	10
SRAM_2kx8	24	12

Scan by vintageTEK - Your donations help support the museum - vintagetek.org

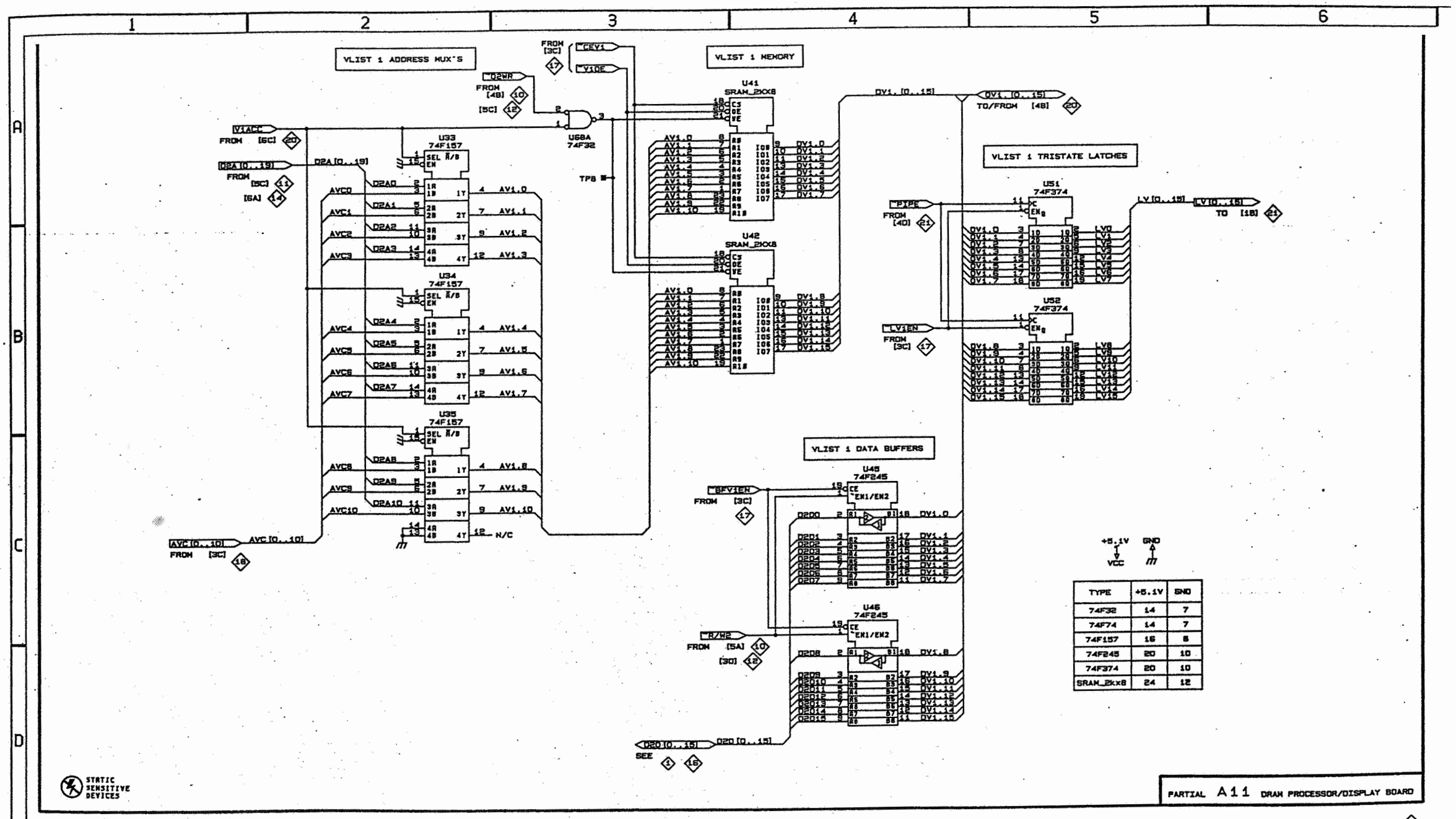

TYPE	+5.1V	GND
74F32	14	7
74F74	14	7
74F157	16	8
74F245	20	10
74F374	20	10
SRAM_2Kx8	24	12

TDS 540

VECTOR LIST 1

A11 19

Scan by vintageTEK - Your donations help support the museum - vintagetek.org

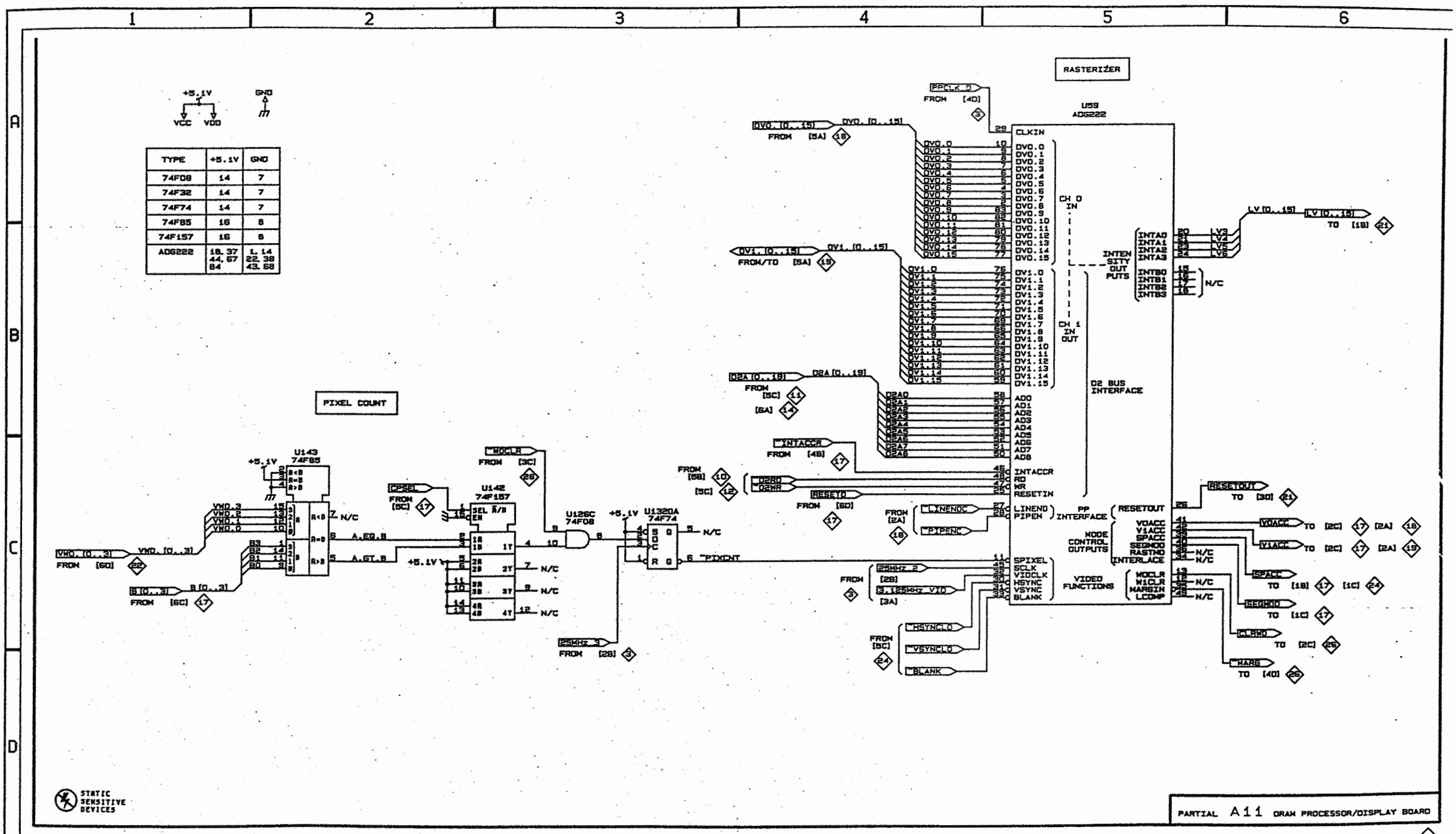

TYPE	+5.1V	GND
74F08	14	7
74F32	14	7
74F74	14	7
74F85	16	8
74F157	16	8
ADG222	18, 37 44, 67 84	1, 14 22, 38 43, 68

Scan by vintageTEK - Your donations help support the museum - vintagetek.org

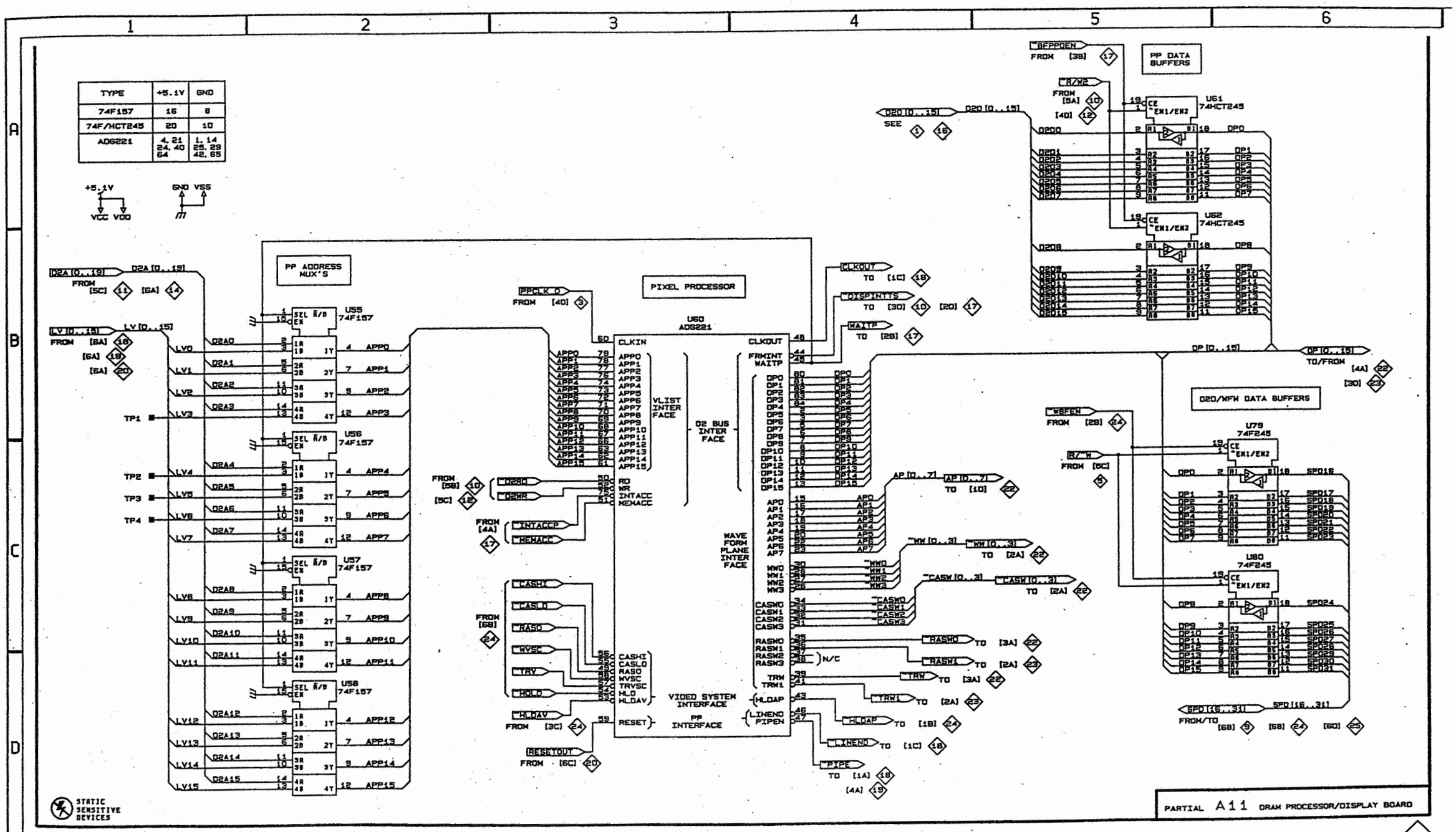

TDS 540

PIXEL PROCESSOR & D20/WFM DATA BUFFERS

A11 21

Scan by vintageTEK - Your donations help support the museum - vintagetek.org

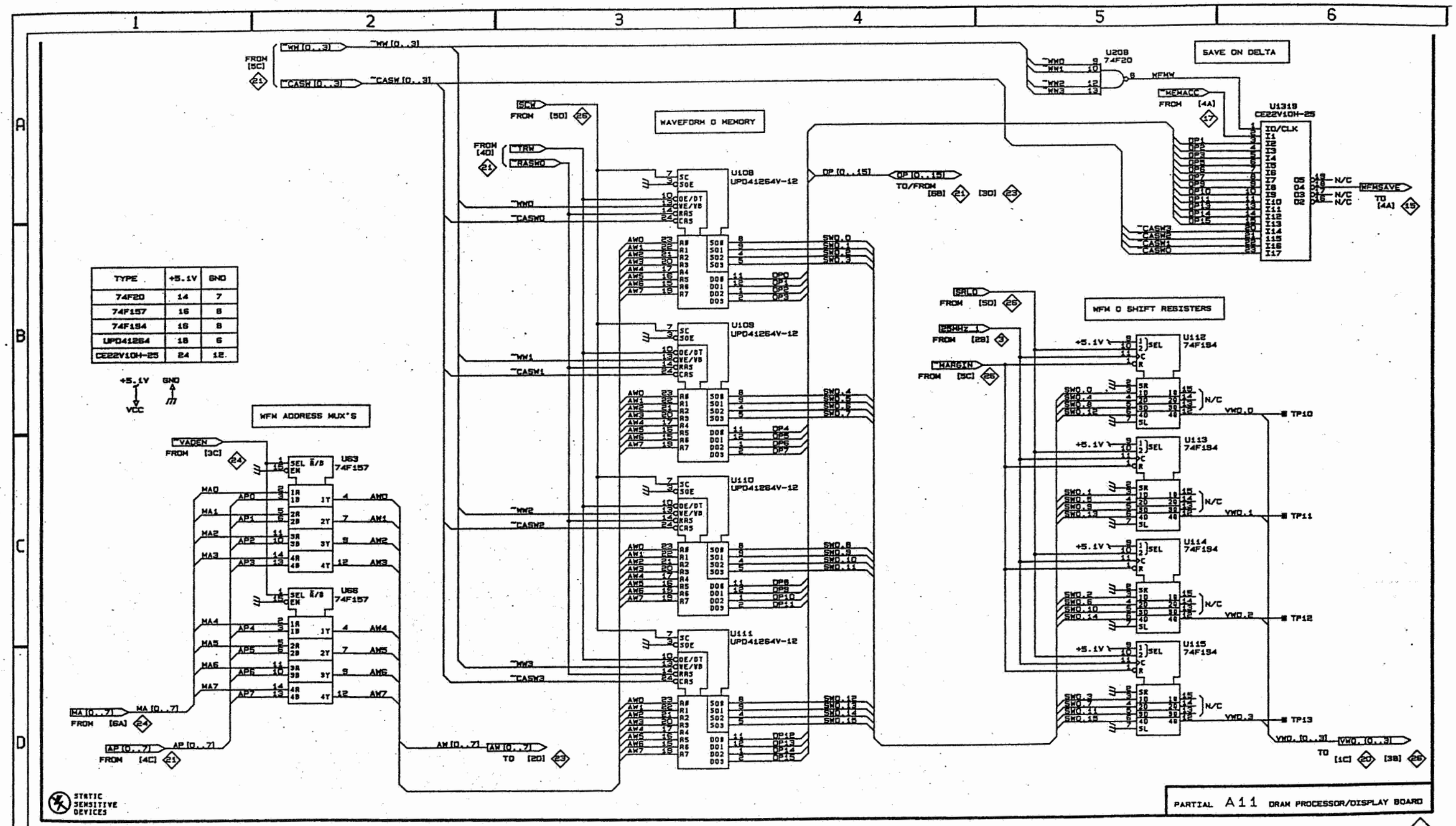

TYPE	+5.1V	GND
74F20	14	7
74F157	16	8
74F194	16	8
UPD41264	18	6
CE22V10H-25	24	12.

TDS 540

WAVEFORM PLANE 0 & SAVE ON DELTA

A11 22

Scan by vintageTEK - Your donations help support the museum - vintagetek.org

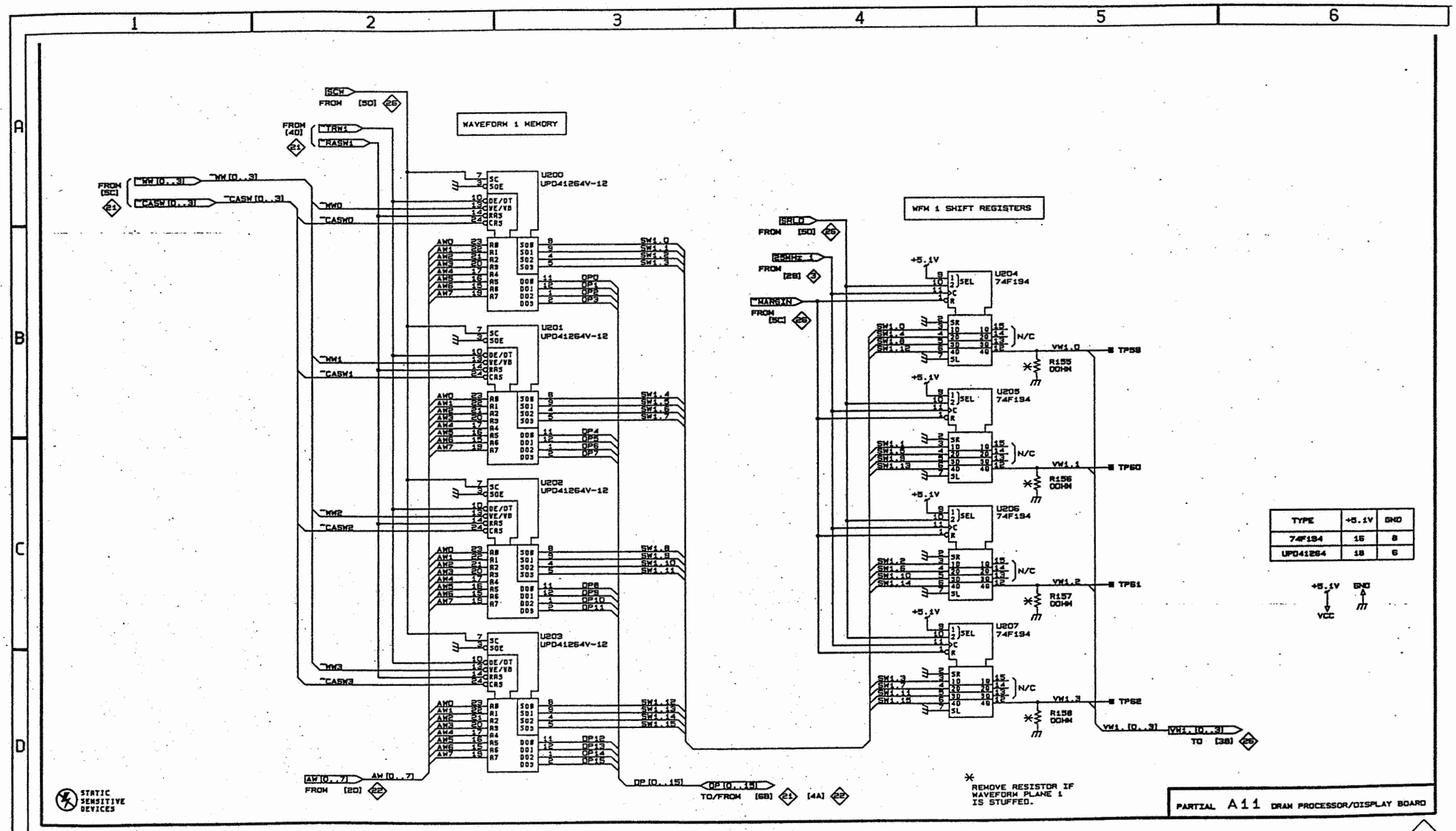

TDS 540

WAVEFORM PLANE 1

A11 23

Scan by vintageTEK - Your donations help support the museum - vintagetek.org

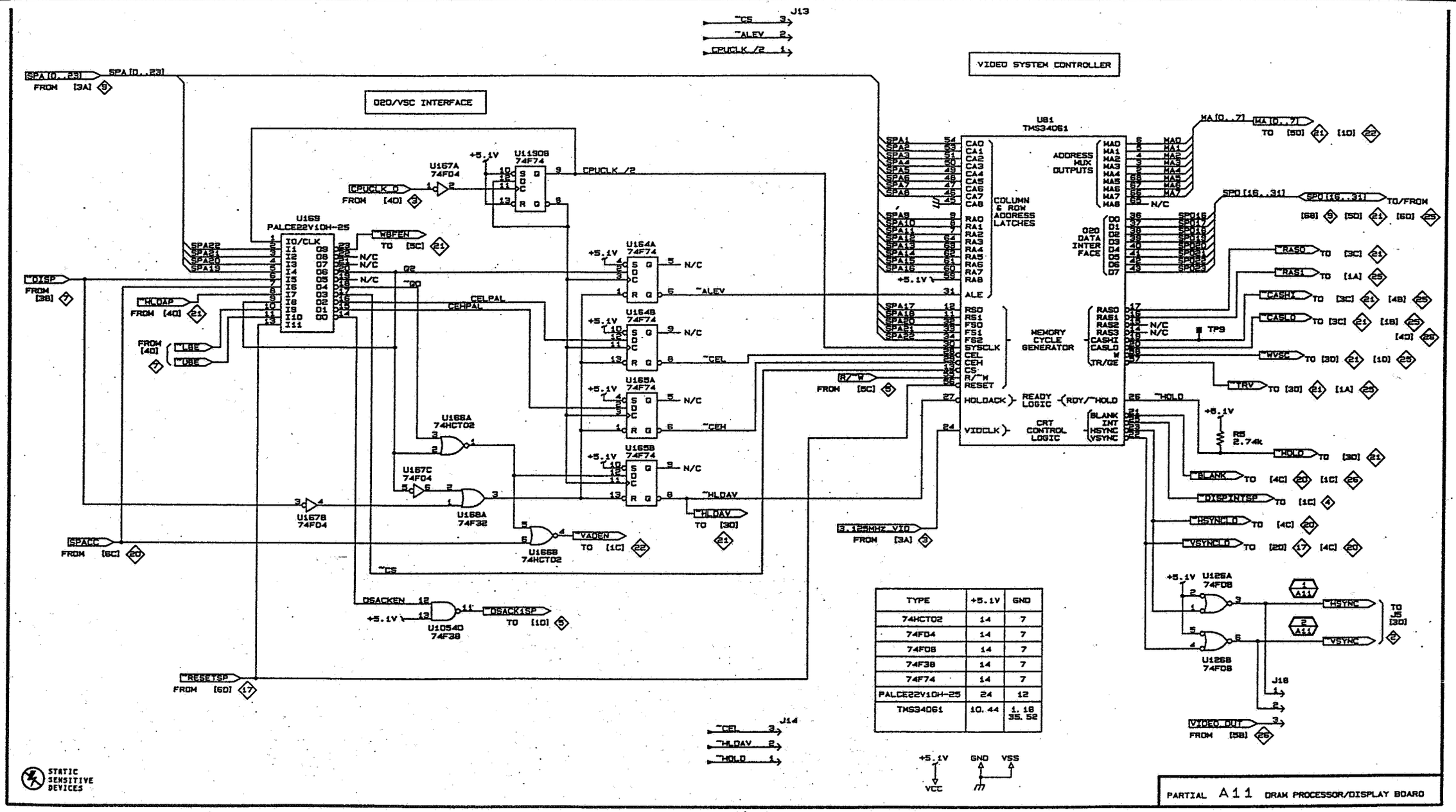

TYPE	+5.1V	GND
74HCT02	14	7
74F04	14	7
74F08	14	7
74F38	14	7
74F74	14	7
PALCE22V10H-25	24	12
TMS34061	10, 44	1, 18 35, 52

Scan by vintageTEK - Your donations help support the museum - vintagetek.org

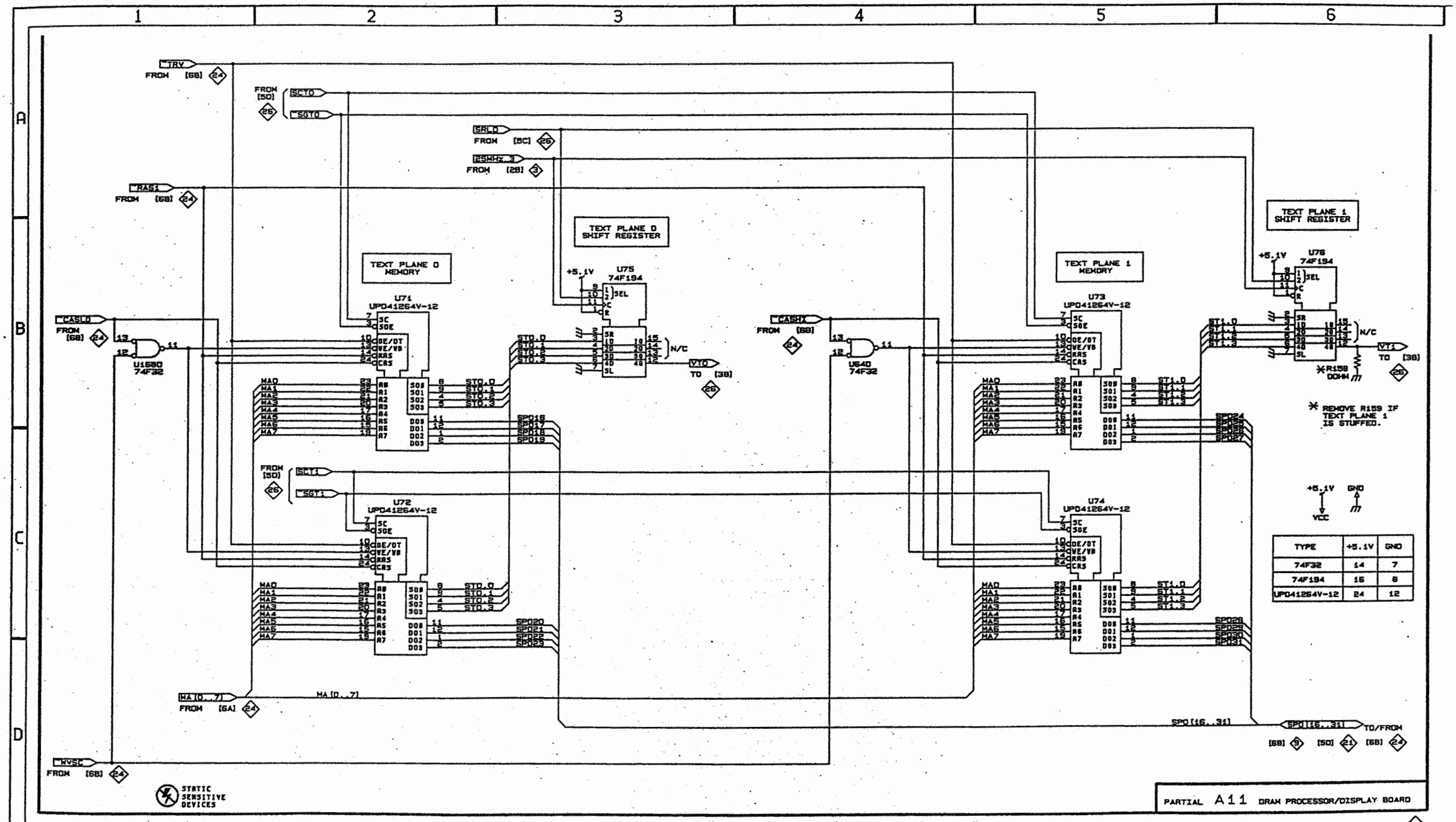

TDS 540

TEXT PLANES 0 & 1

A11 25

Scan by vintageTEK - Your donations help support the museum - vintagetek.org

TYPE	+5.1V	VAA	GND	N/C
74F04	14		7	
74F32	14		7	
74F74	14		7	
BT471		4, 20 21, 22	3, 24	1, 2
PALCE16V8H	20		10	

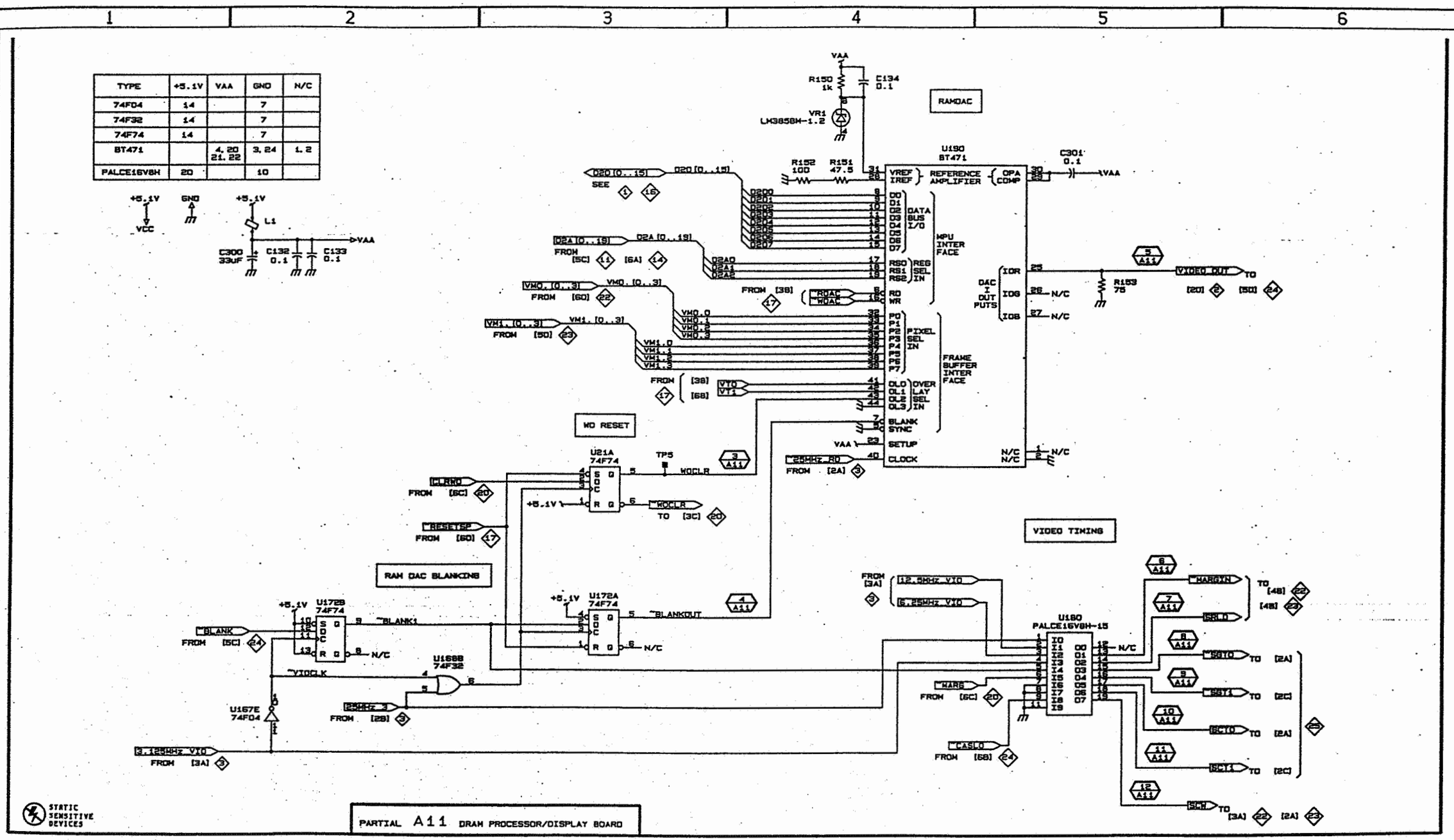

Scan by vintageTEK - Your donations help support the museum - vintagetek.org

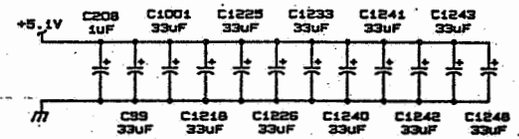

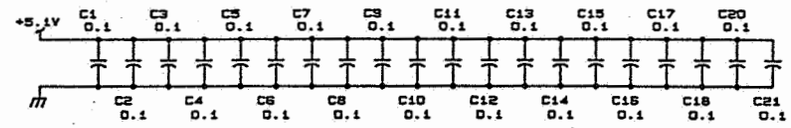

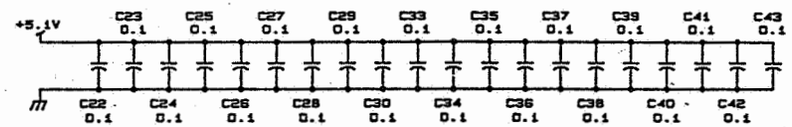

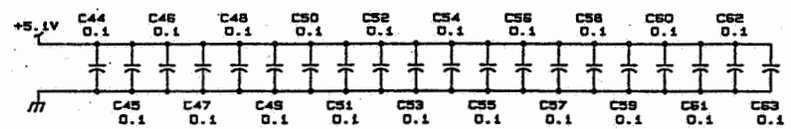

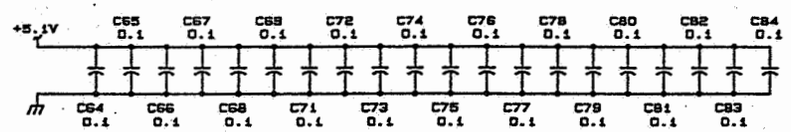

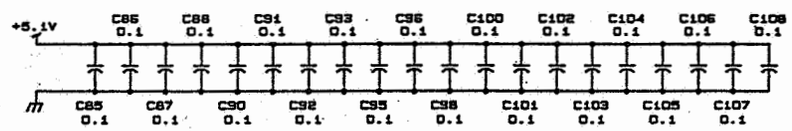

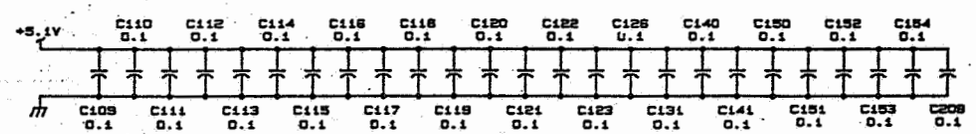

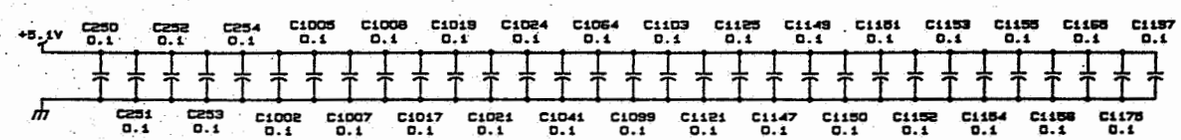

PARTIAL A11 DRAM PROCESSOR/DISPLAY BOARD

Scan by vintageTEK - Your donations help support the museum - vintagetek.org

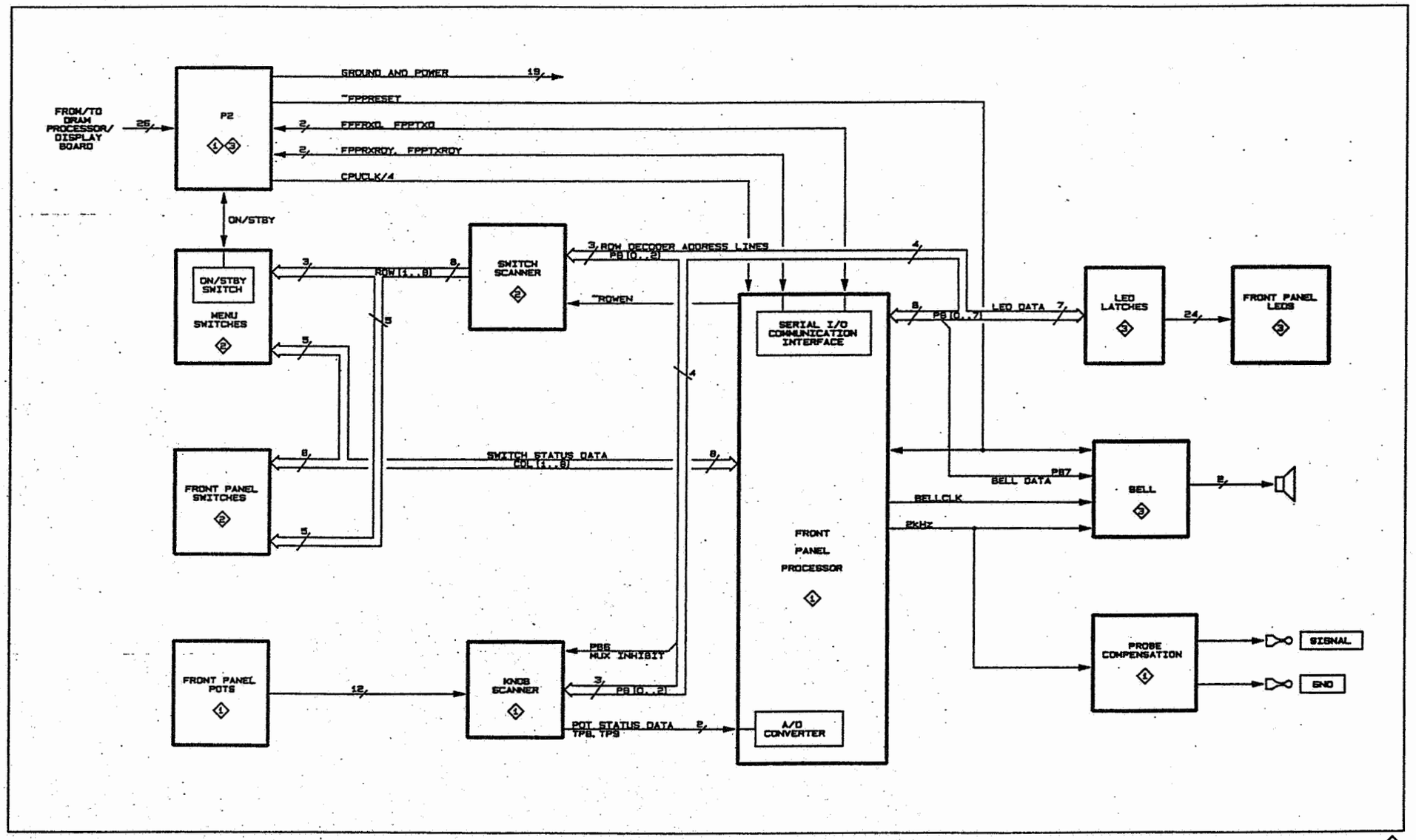

TDS 540

A12 FRONT PANEL BOARD BLOCK DIAGRAM A12

Scan by vintageTEK - Your donations help support the museum - vintagetek.org

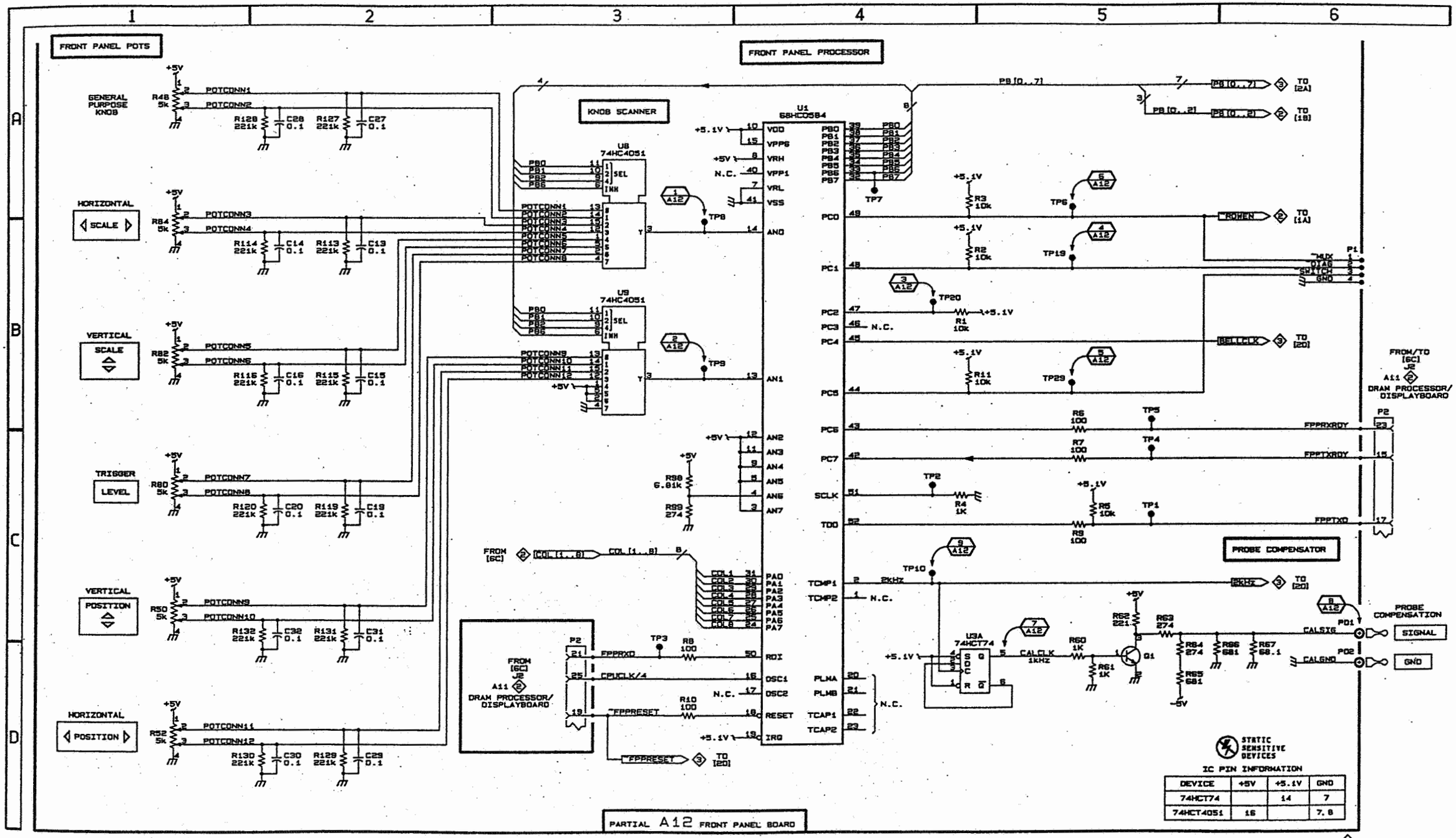

Scan by vintageTEK - Your donations help support the museum - vintagetek.org

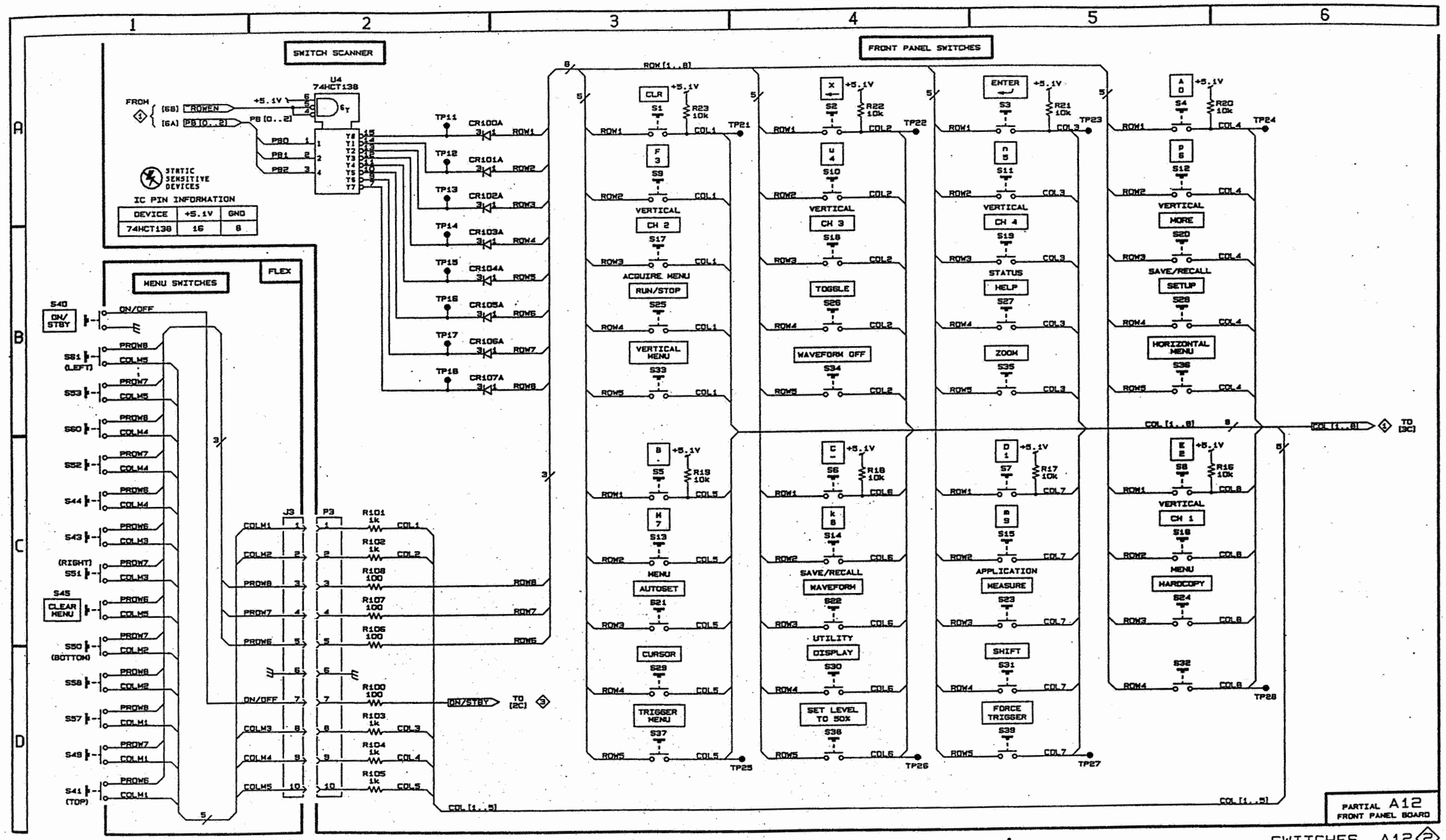

TDS 540

SWITCHES A12 2

Scan by vintageTEK - Your donations help support the museum - vintagetek.org

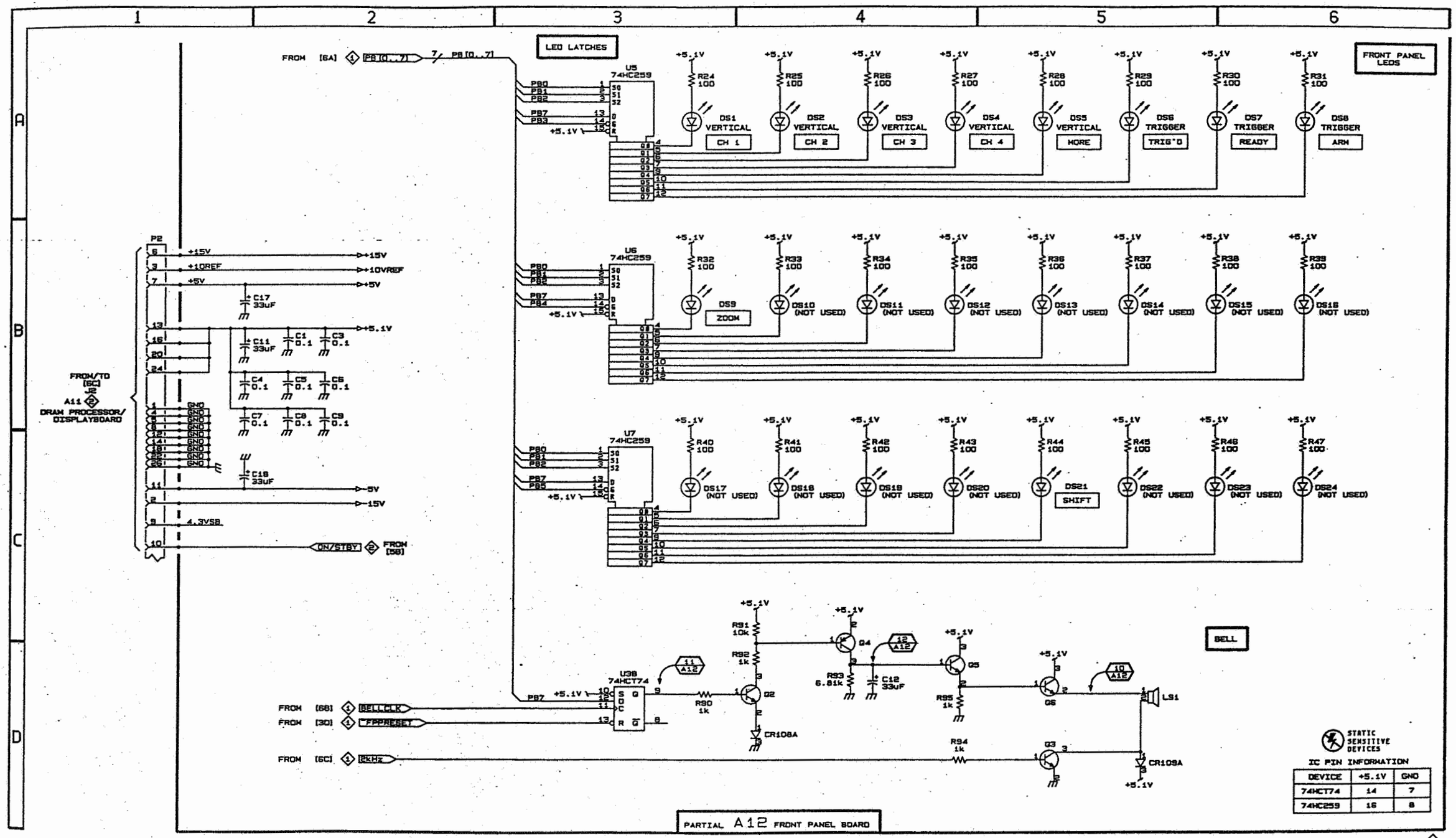

Scan by vintageTEK - Your donations help support the museum - vintagetek.org

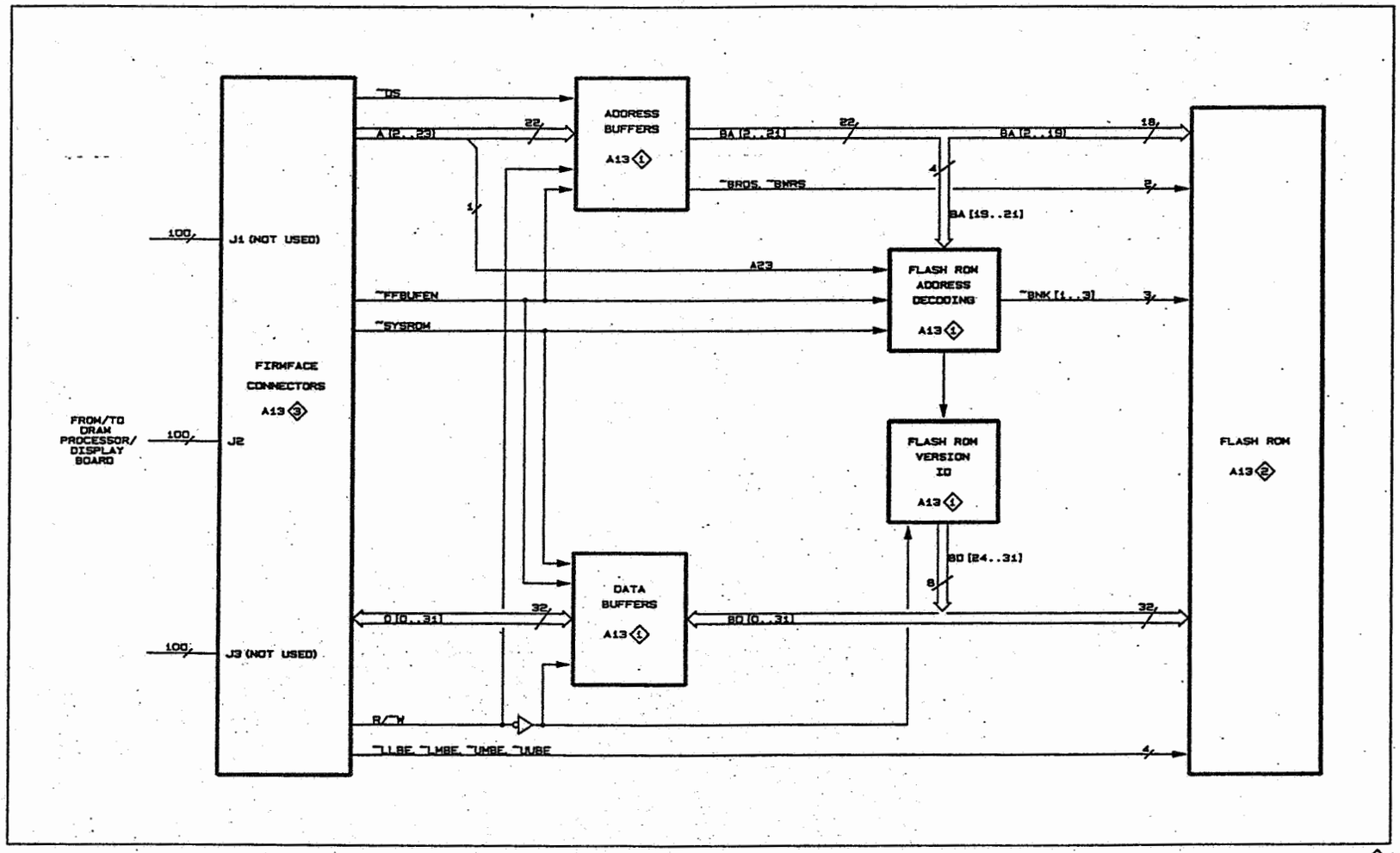

TDS 540 A13 FIRMFACE BOARD BLOCK DIAGRAM A13 0

Scan by vintageTEK - Your donations help support the museum - vintagetek.org

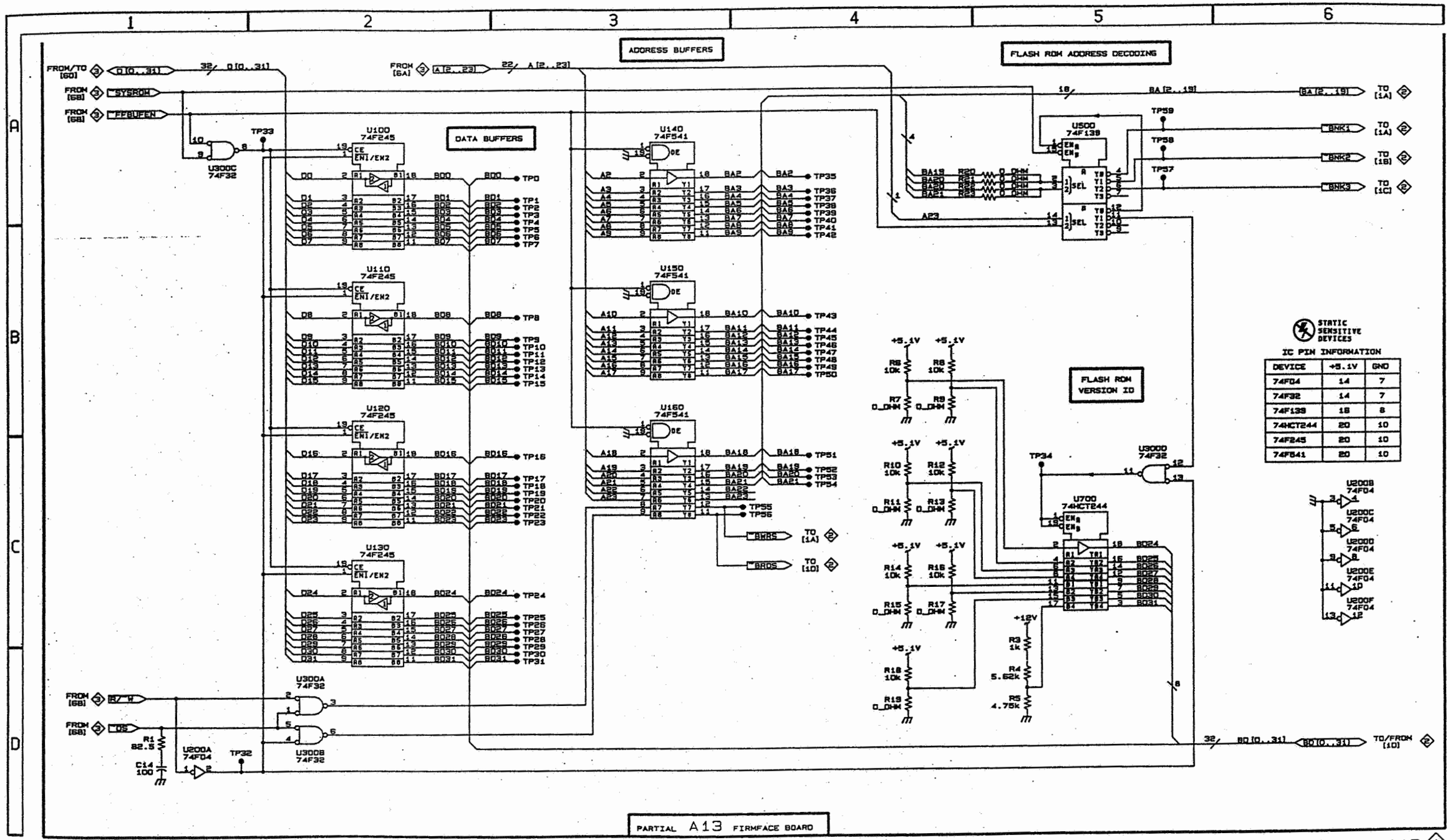

IC PIN INFORMATION

DEVICE	+5.1V	GND
74F04	14	7
74F32	14	7
74F139	16	8
74HCT244	20	10
74F245	20	10
74F541	20	10

TDS 540

FLASH ROM BUFFERS, DECODING, AND VERSION ID A13 1

Scan by vintageTEK - Your donations help support the museum - vintagetek.org

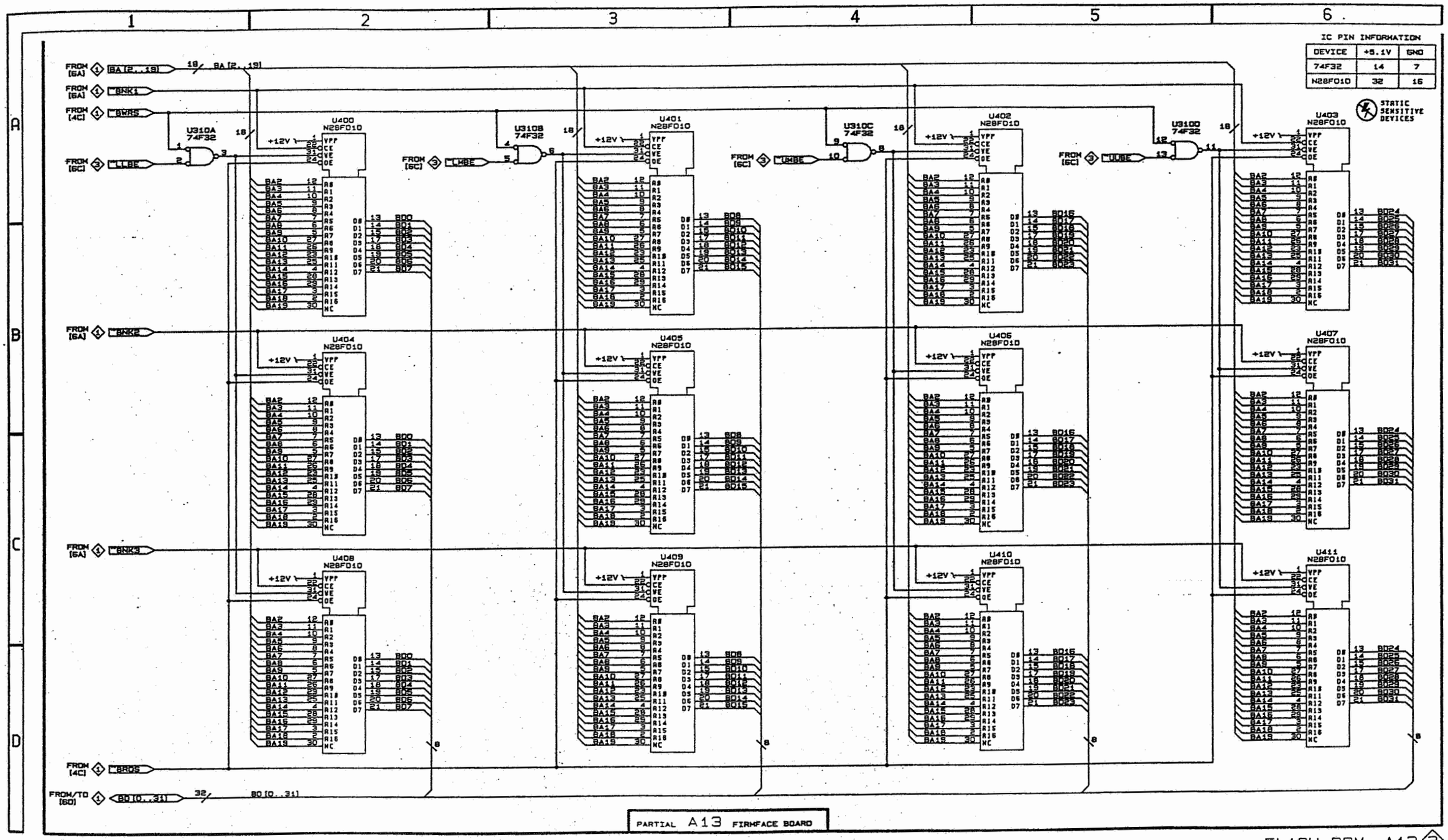

TDS 540

FLASH ROM A13 2

Scan by vintageTEK - Your donations help support the museum - vintagetek.org

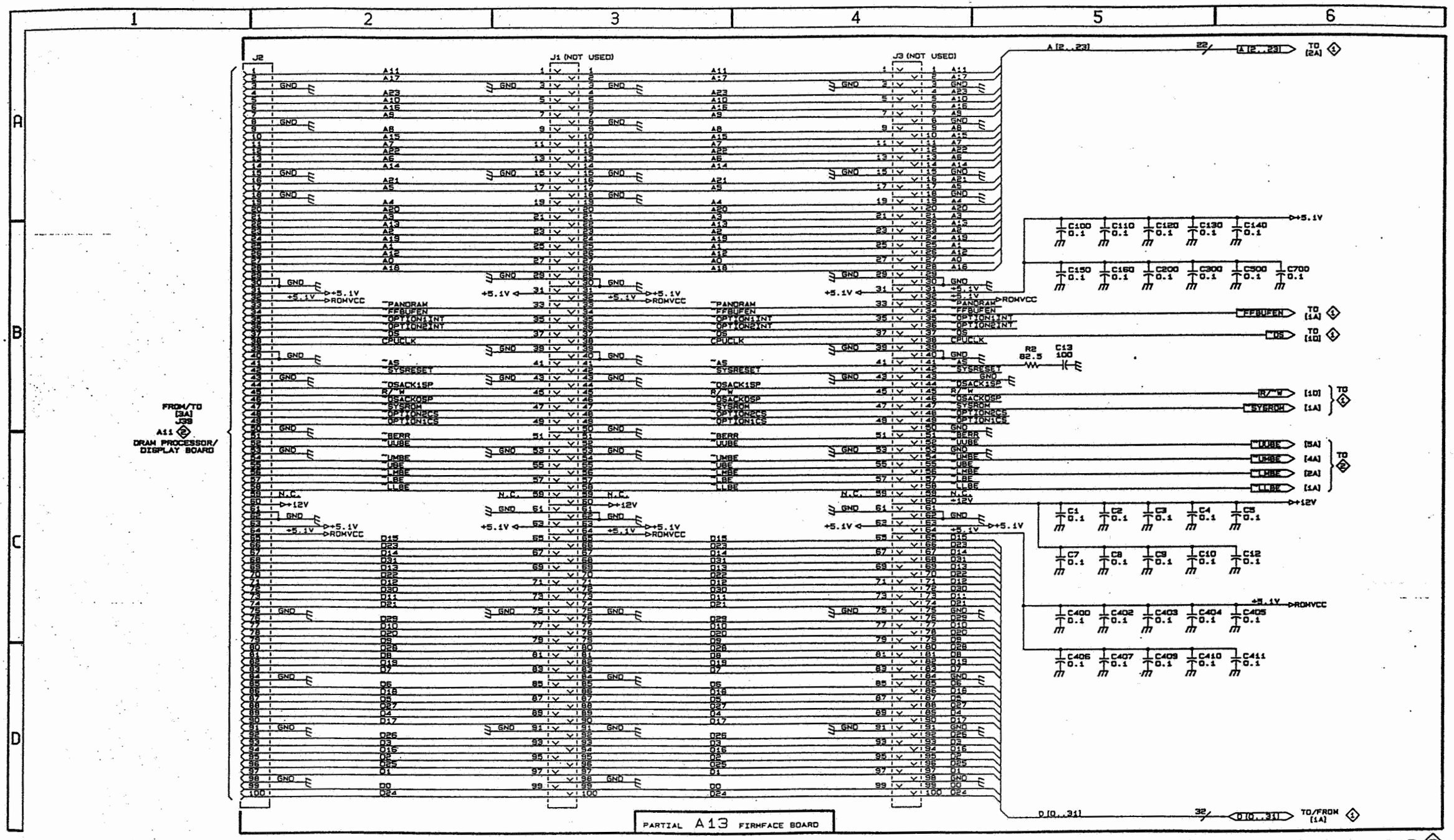

Scan by vintageTEK - Your donations help support the museum - vintagetek.org

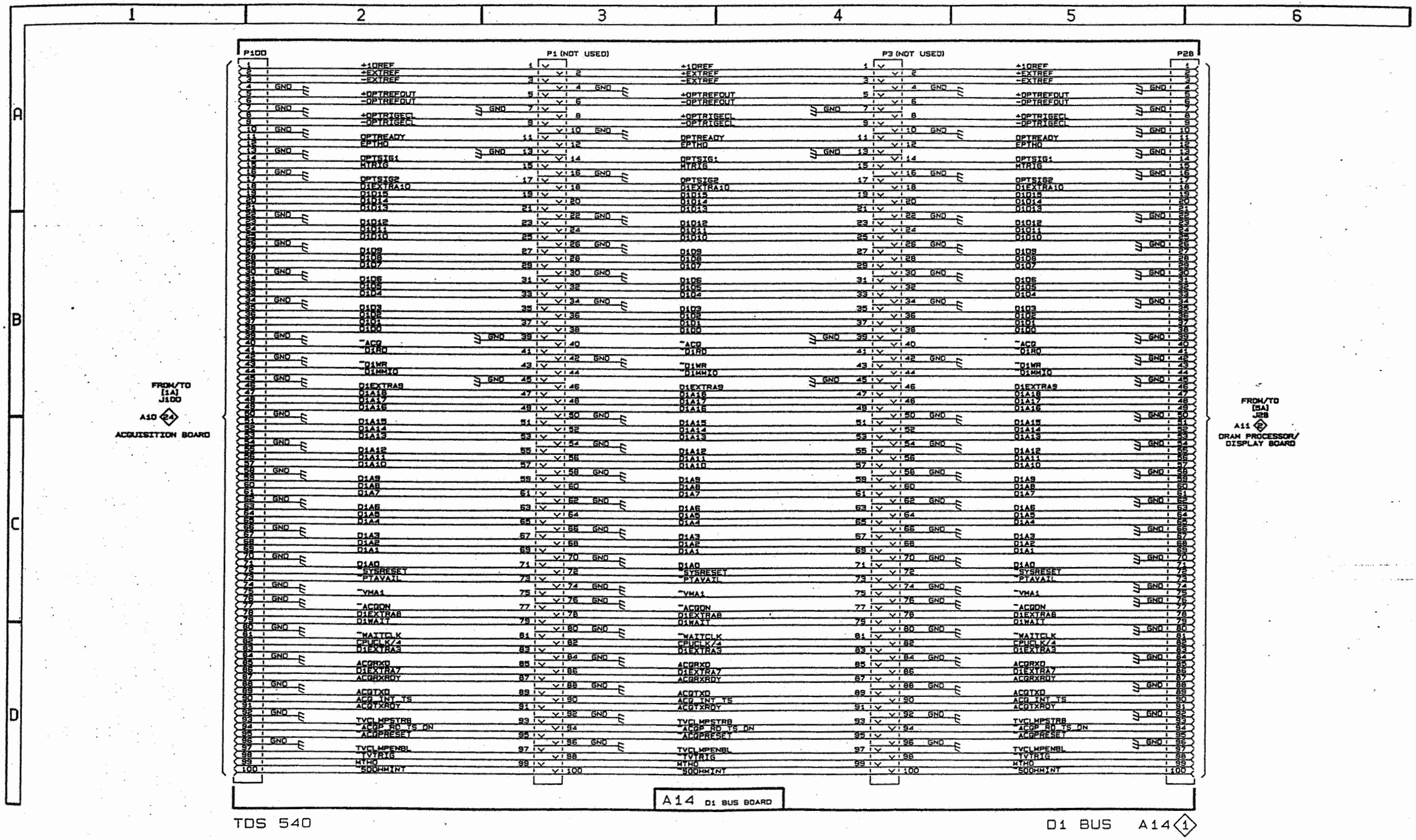

Scan by vintageTEK - Your donations help support the museum - vintagetek.org

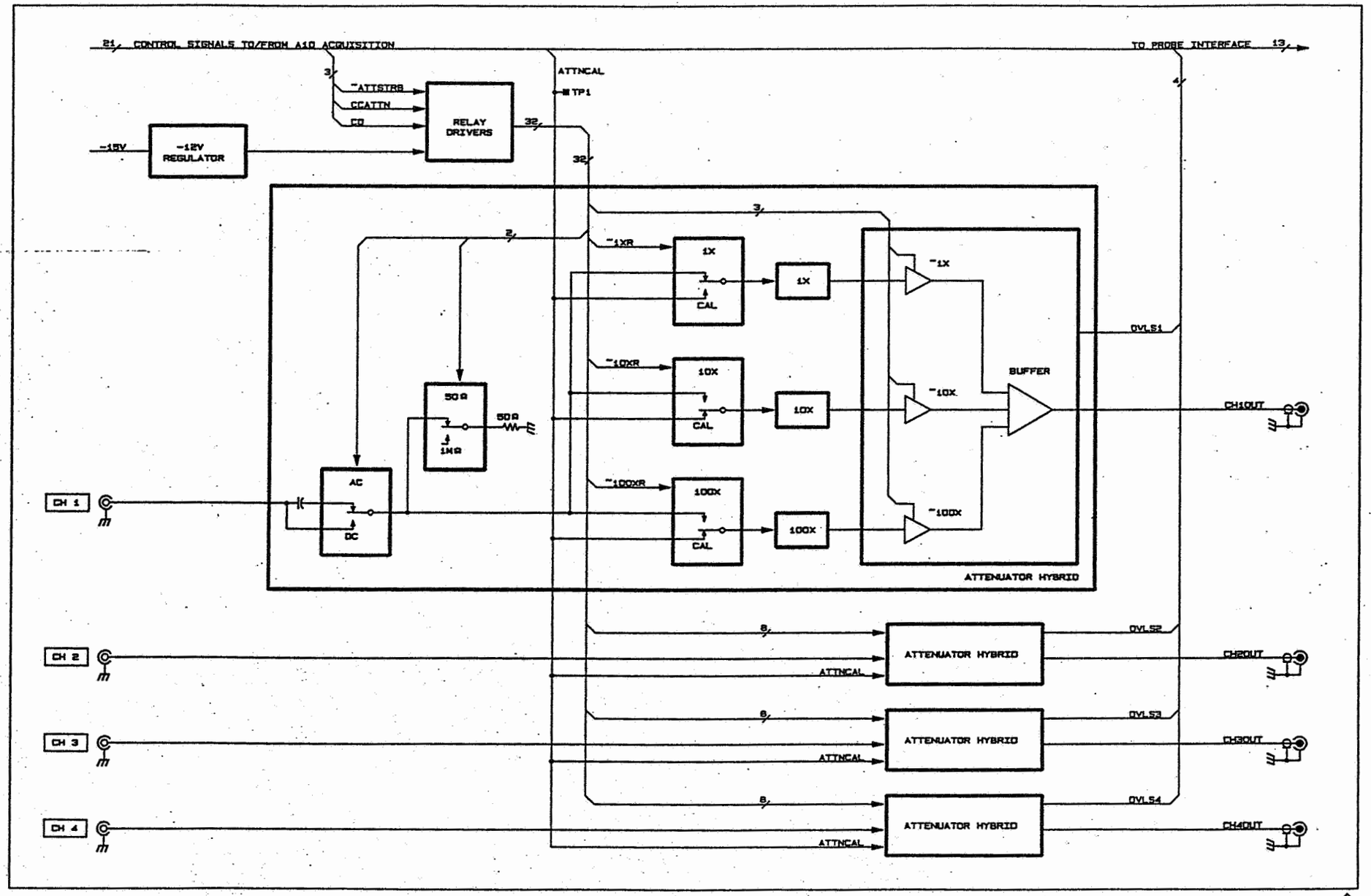

TDS 540

A15 ATTENUATOR BOARD BLOCK DIAGRAM A15

Scan by vintageTEK - Your donations help support the museum - vintagetek.org

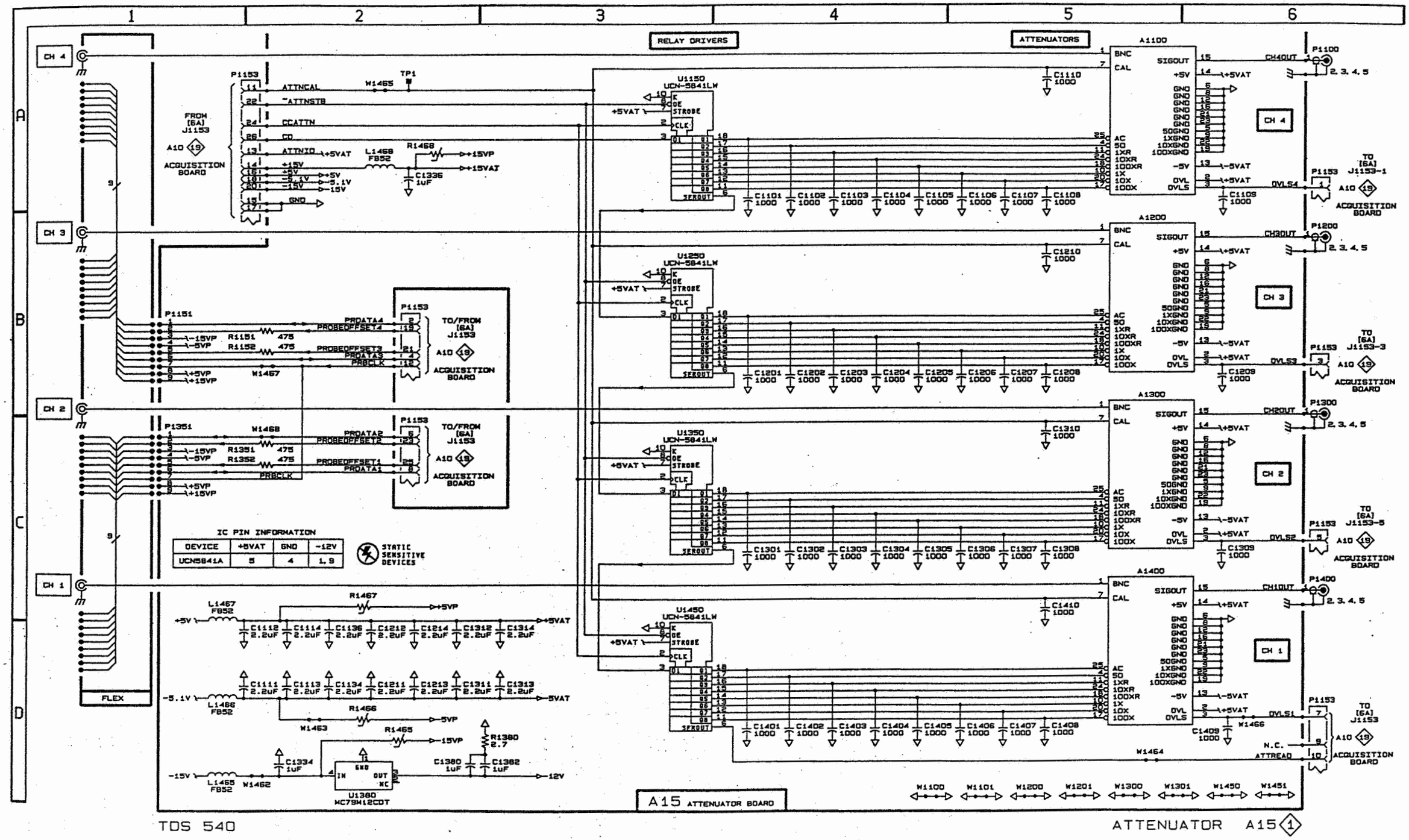

Scan by vintageTEK - Your donations help support the museum - vintagetek.org

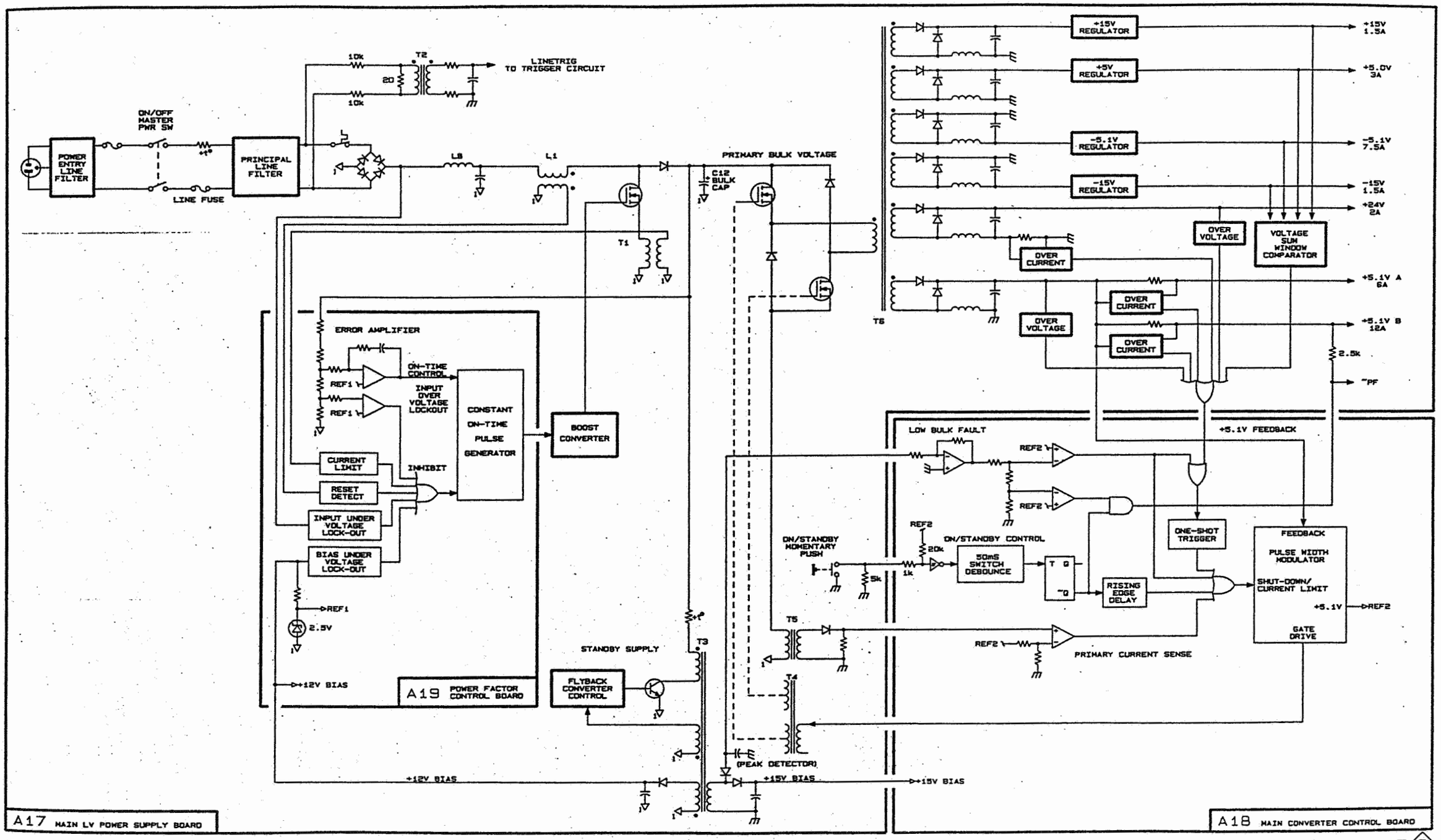

TDS 540

LOW VOLTAGE POWER SUPPLY BLOCK DIAGRAM A17

Scan by vintageTEK - Your donations help support the museum - vintagetek.org

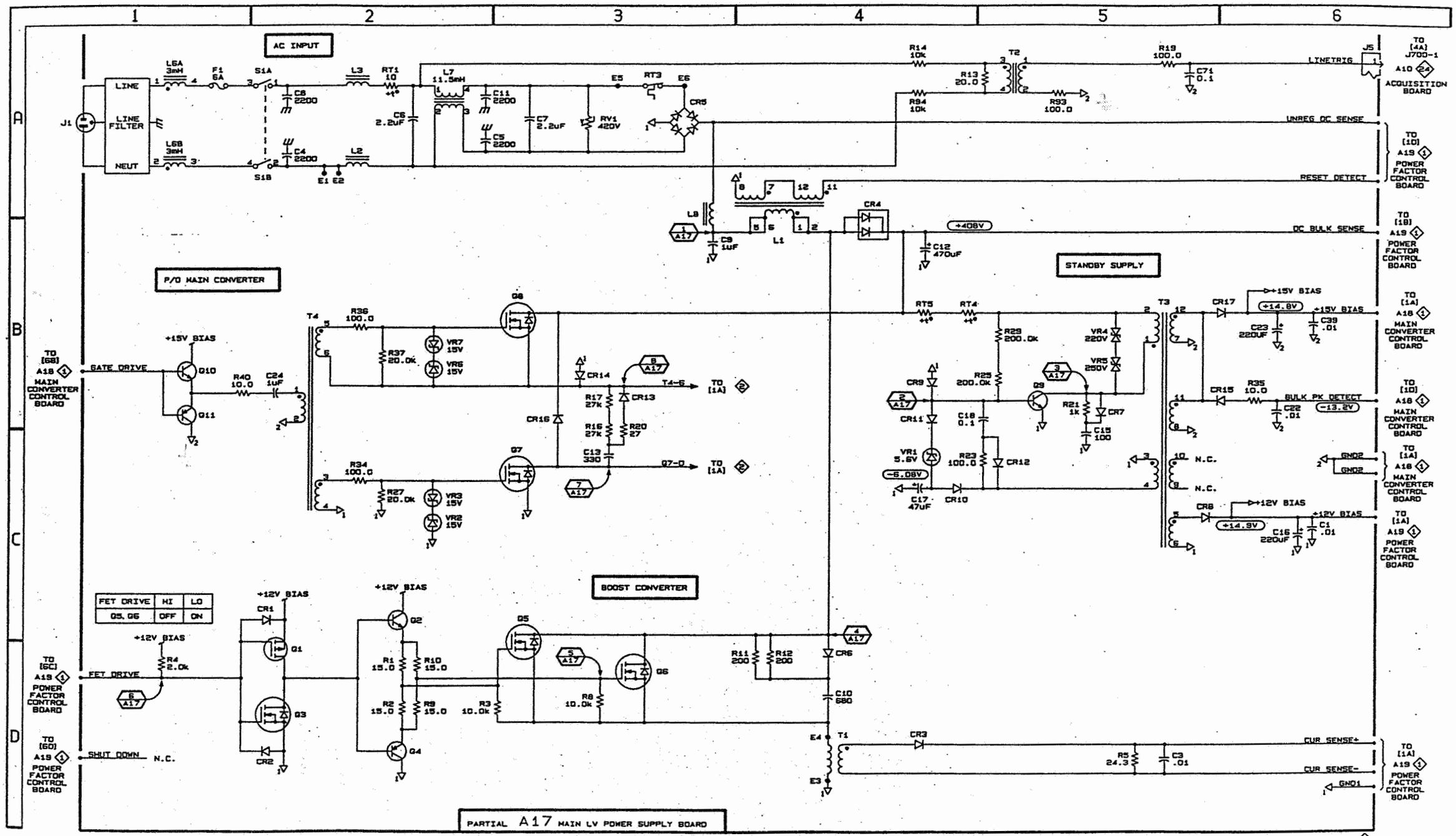

TDS 540

AC INPUT, STANDBY SUPPLY, AND CONVERTERS A17 1

Scan by vintageTEK - Your donations help support the museum - vintagetek.org

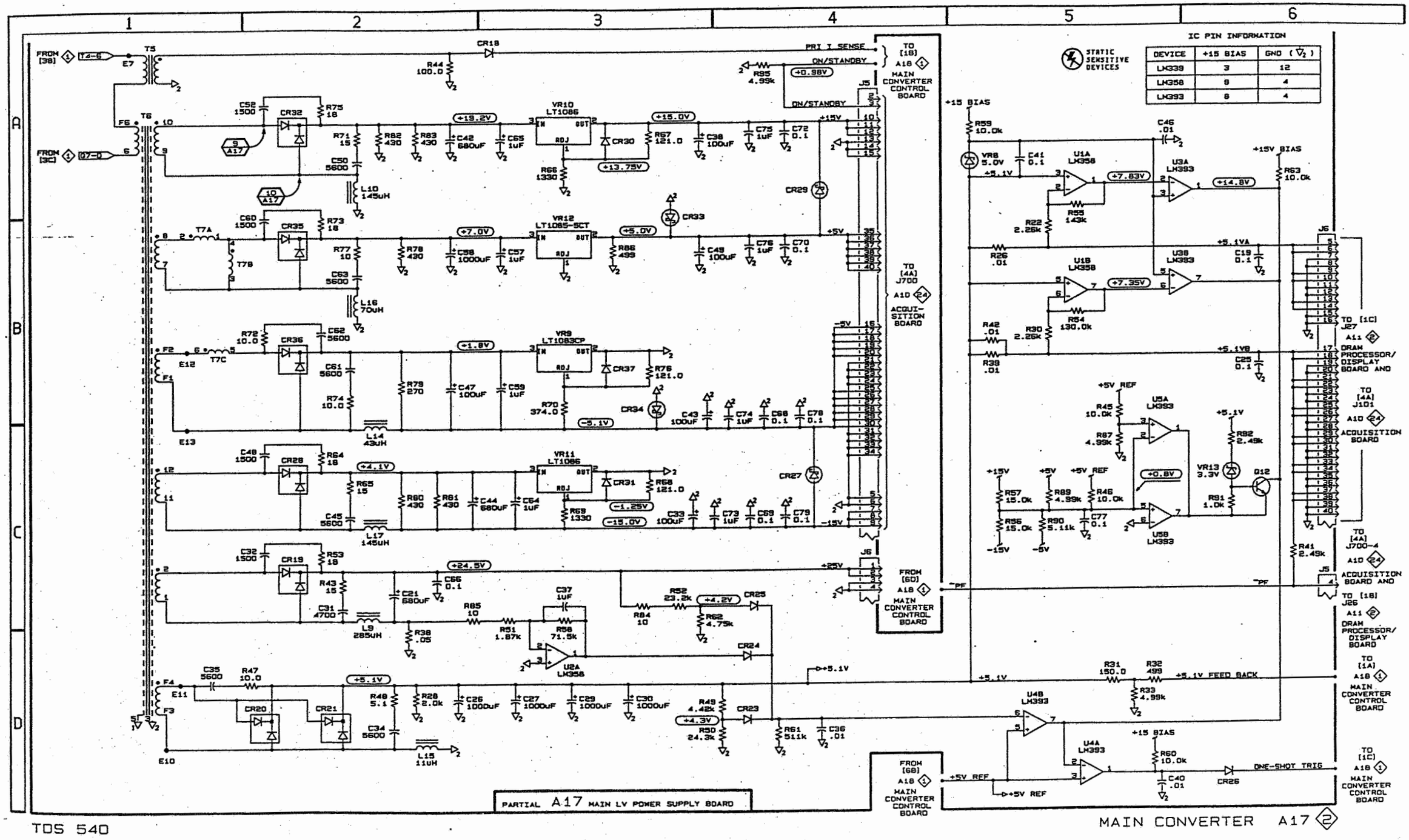

Scan by vintageTEK - Your donations help support the museum - vintagetek.org

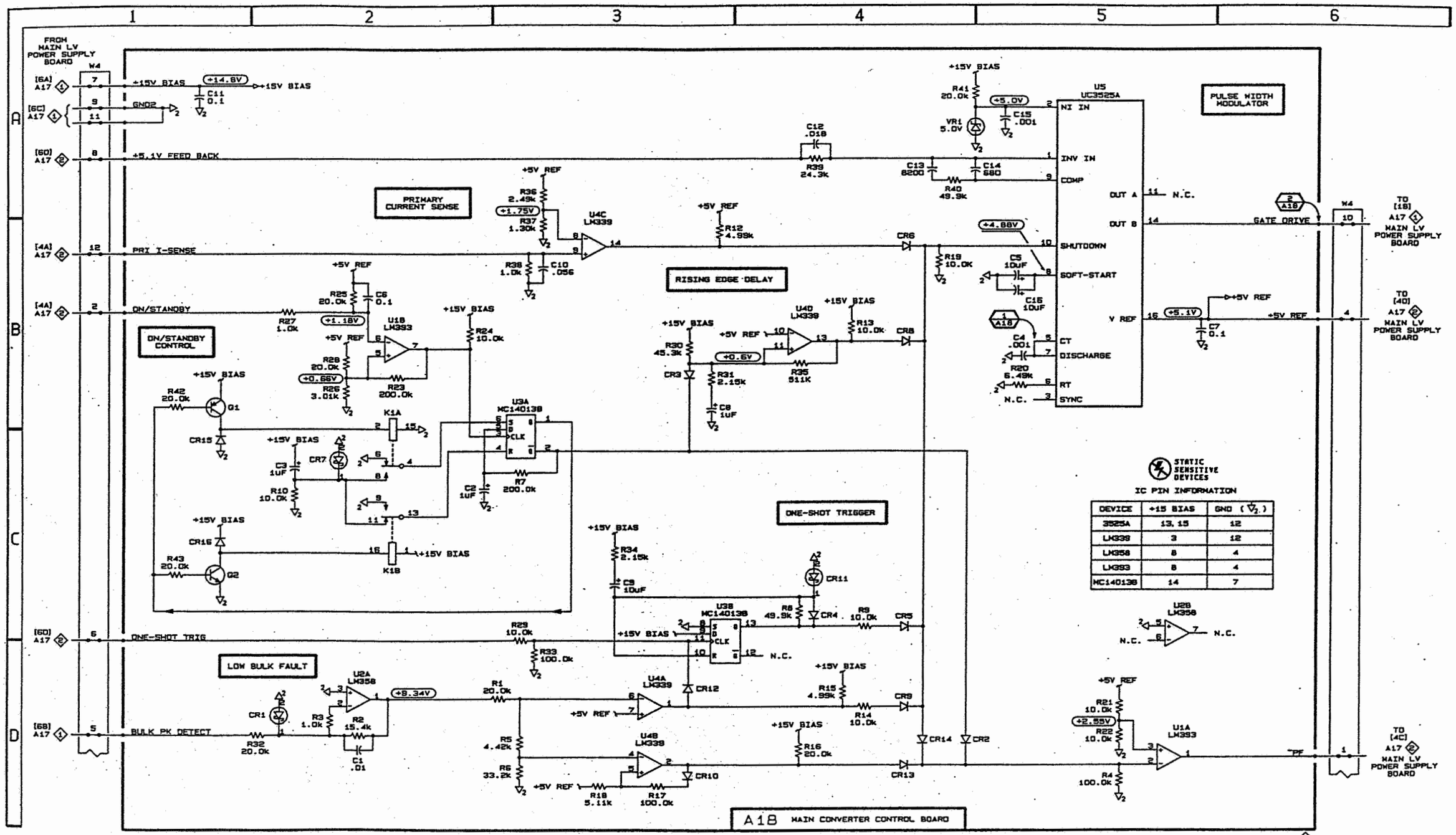

DEVICE	+15 BIAS	GND (⏚)
3525A	13, 15	12
LM339	3	12
LM358	8	4
LM393	8	4
MC14013B	14	7

Scan by vintageTEK - Your donations help support the museum - vintagetek.org

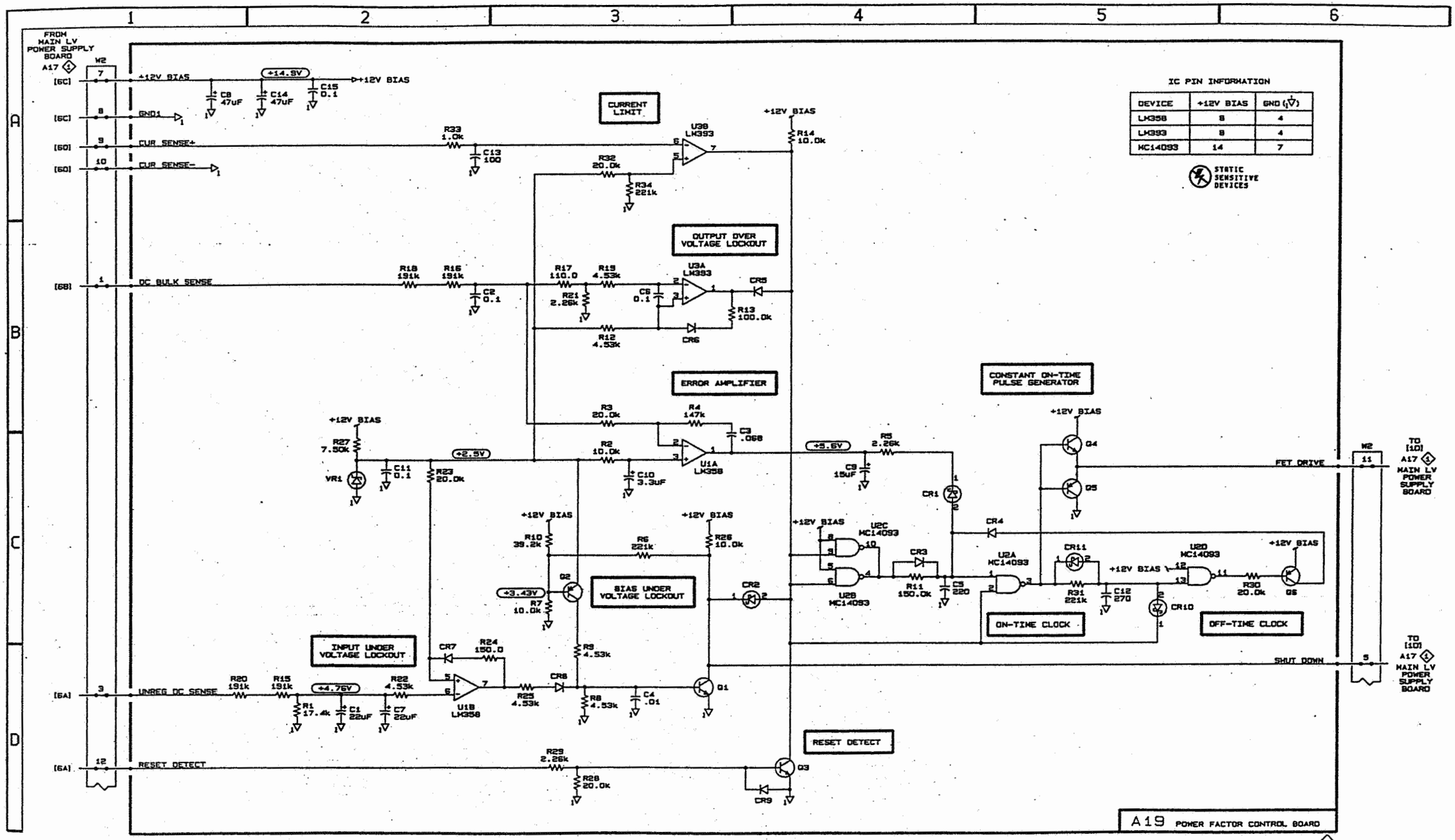

TDS 540

POWER FACTOR CONTROL A19

Scan by vintageTEK - Your donations help support the museum - vintagetek.org

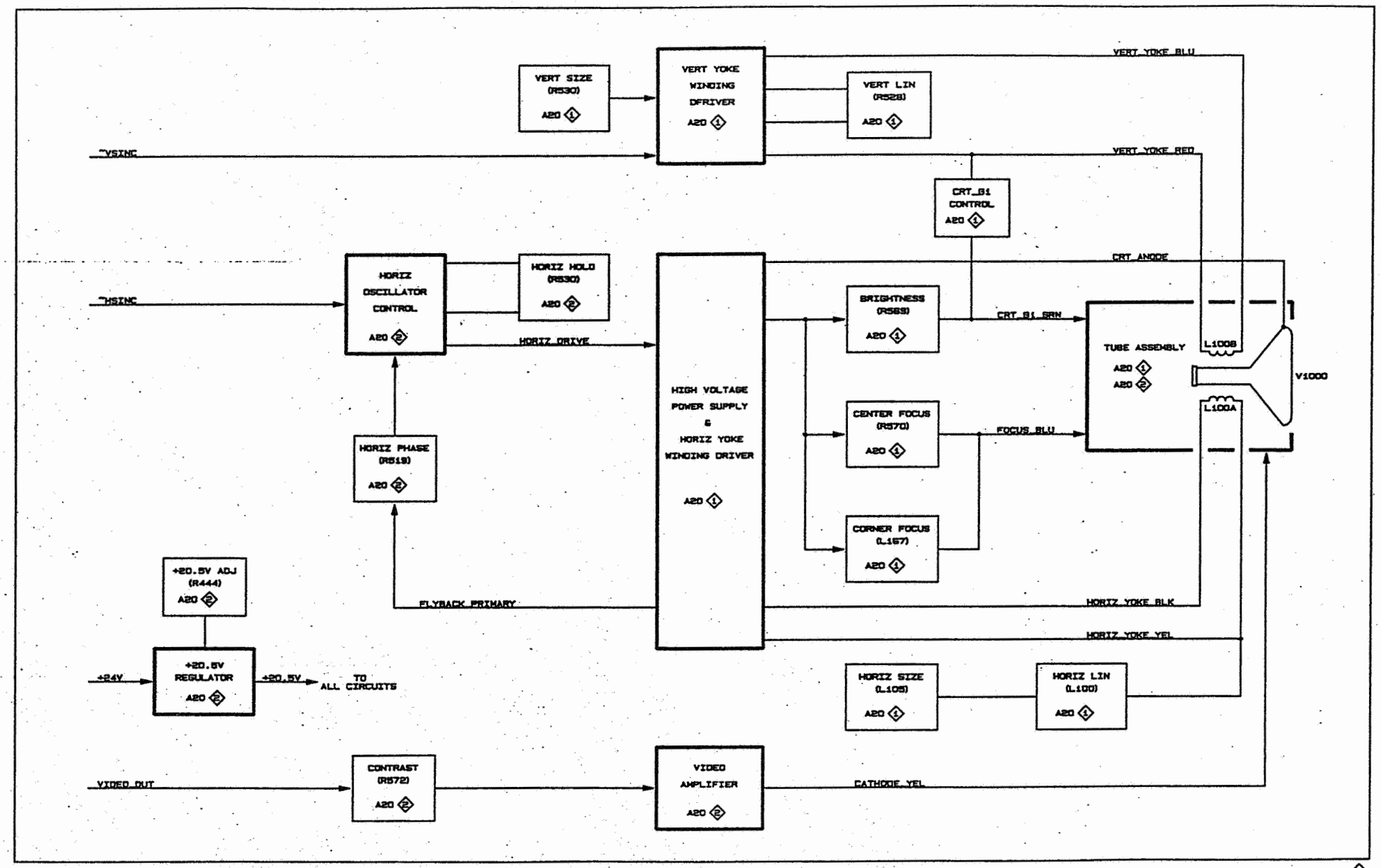

TDS 540 CRT DRIVER BOARD BLOCK DIAGRAM A20 0

Scan by vintageTEK - Your donations help support the museum - vintagetek.org

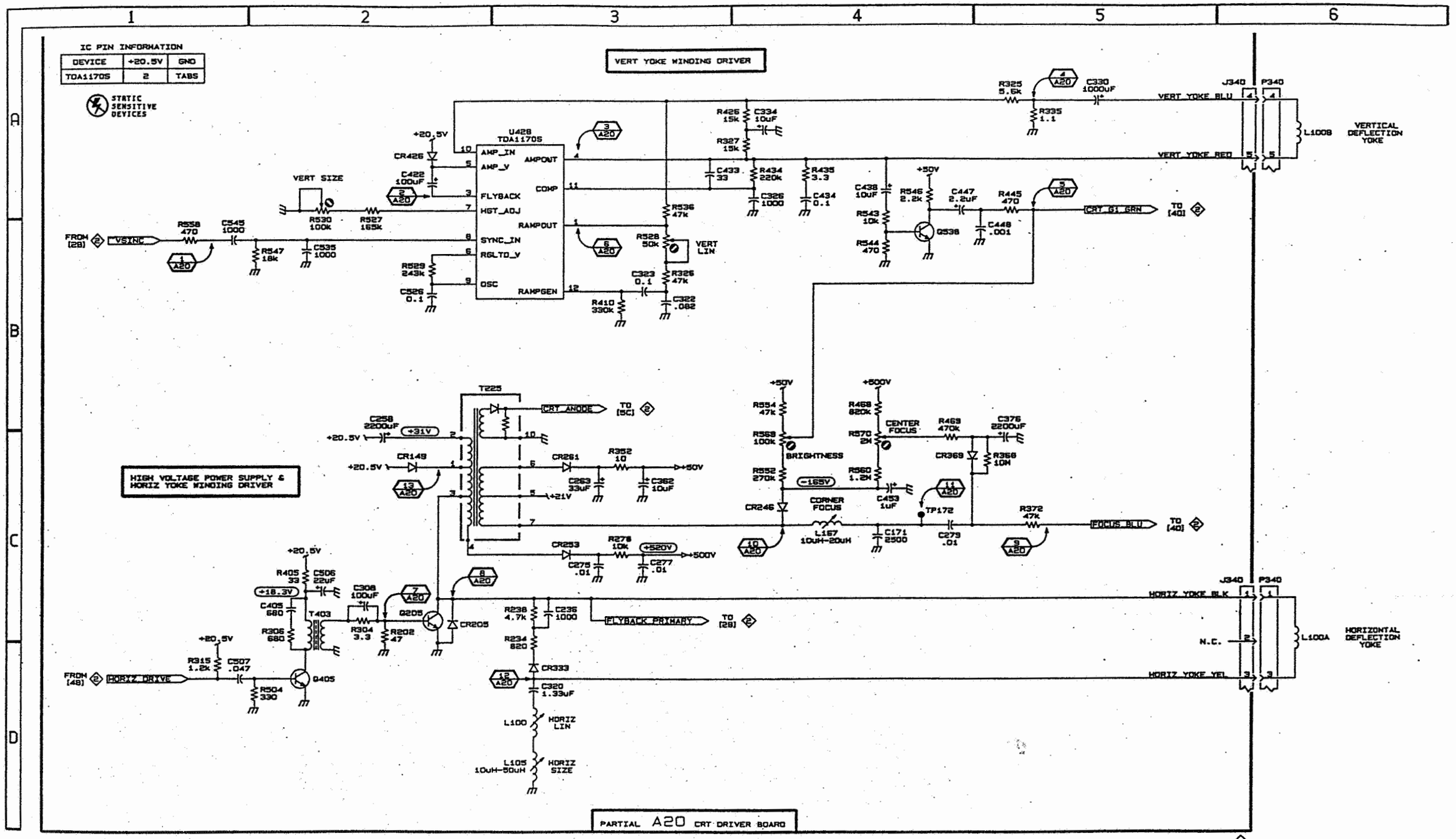

Scan by vintageTEK - Your donations help support the museum - vintagetek.org

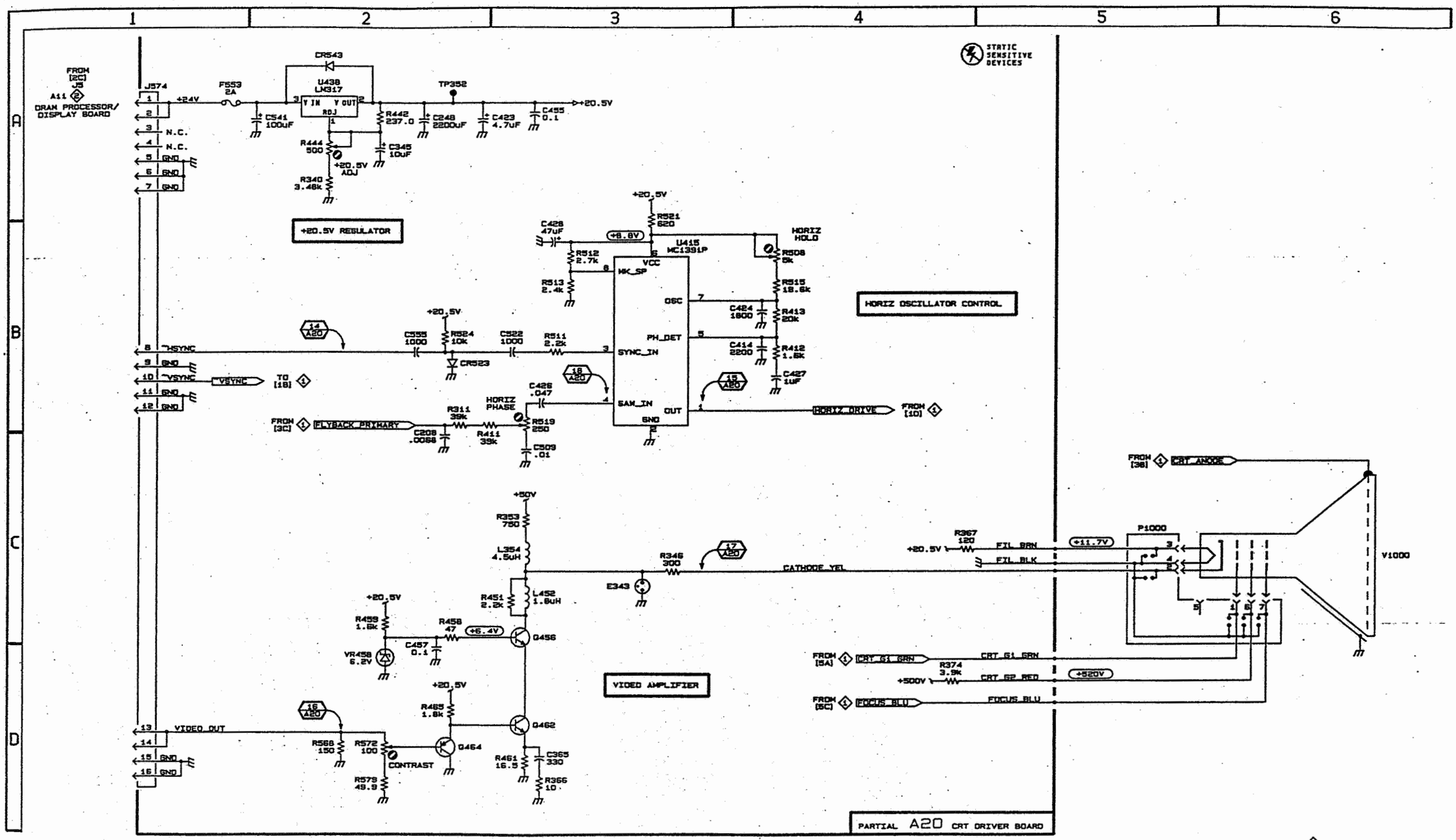

TDS 540

HORIZ OSC CONTROL, MONITOR DRIVER AND CRT A20 2

Scan by vintageTEK - Your donations help support the museum - vintagetek.org

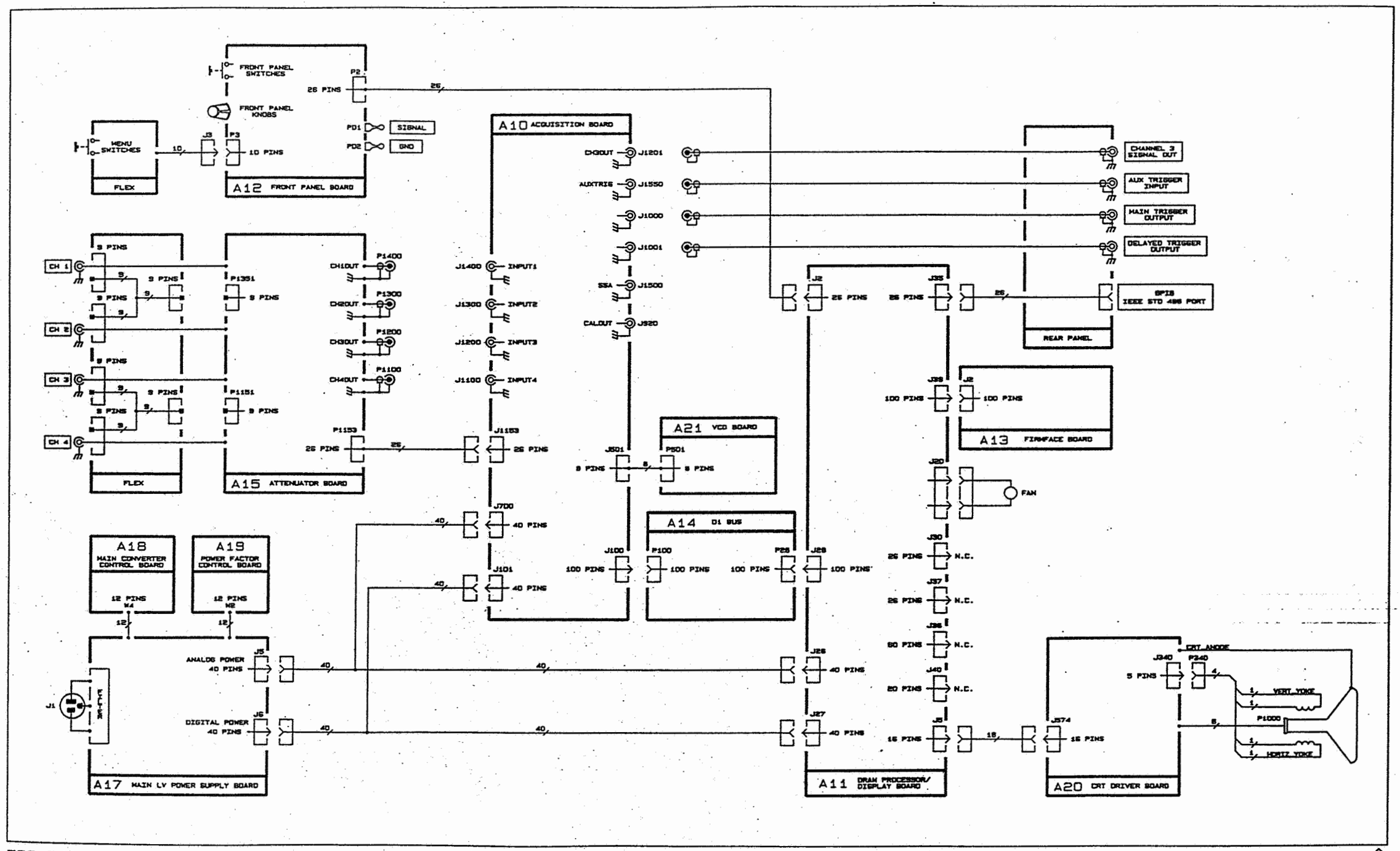

TDS 540

INTERCONNECTIONS

Scan by vintageTEK - Your donations help support the museum - vintagetek.org

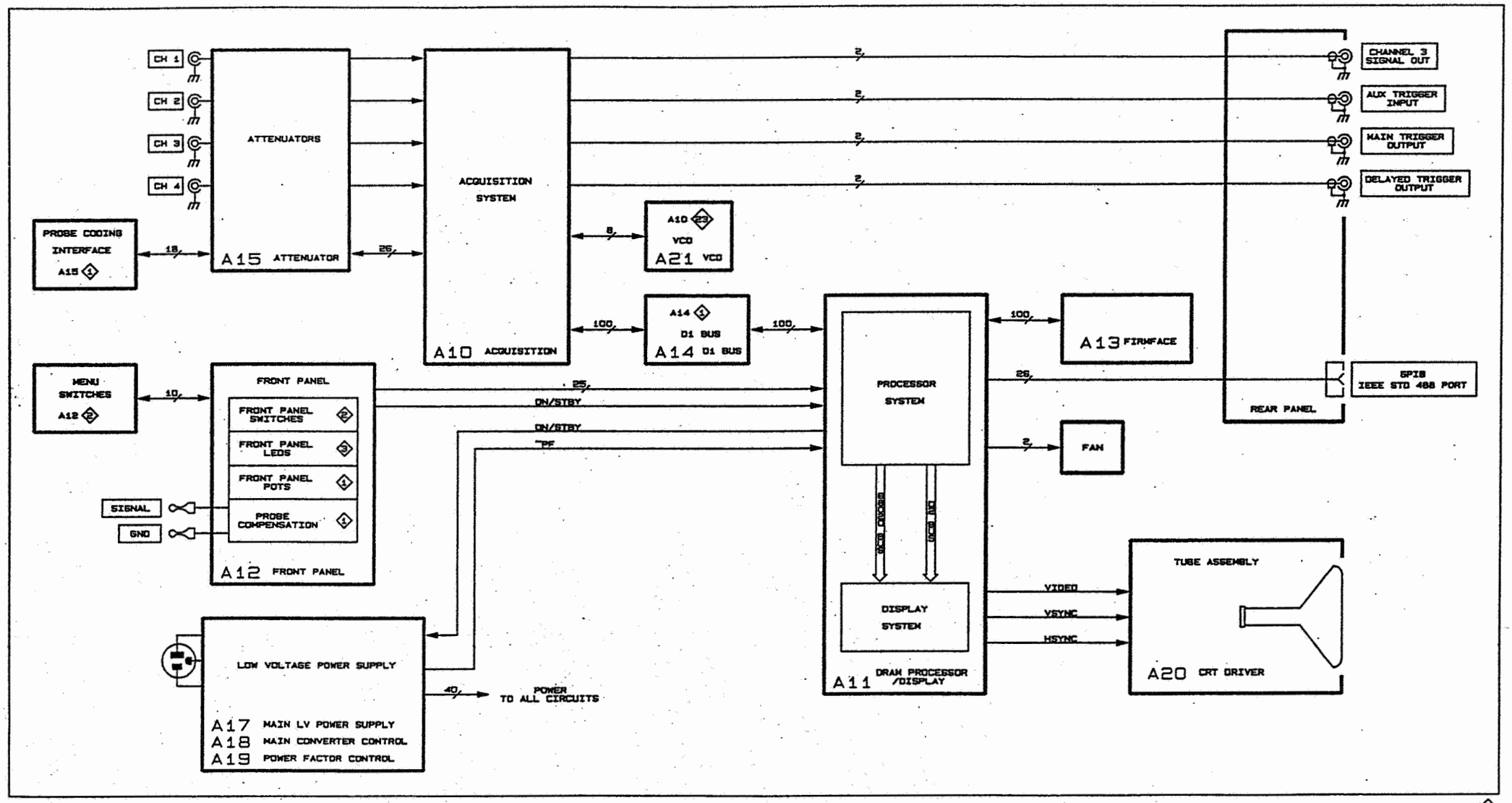

TDS 540

TDS 540 BLOCK DIAGRAM 0

Scan by vintageTEK - Your donations help support the museum - vintagetek.org

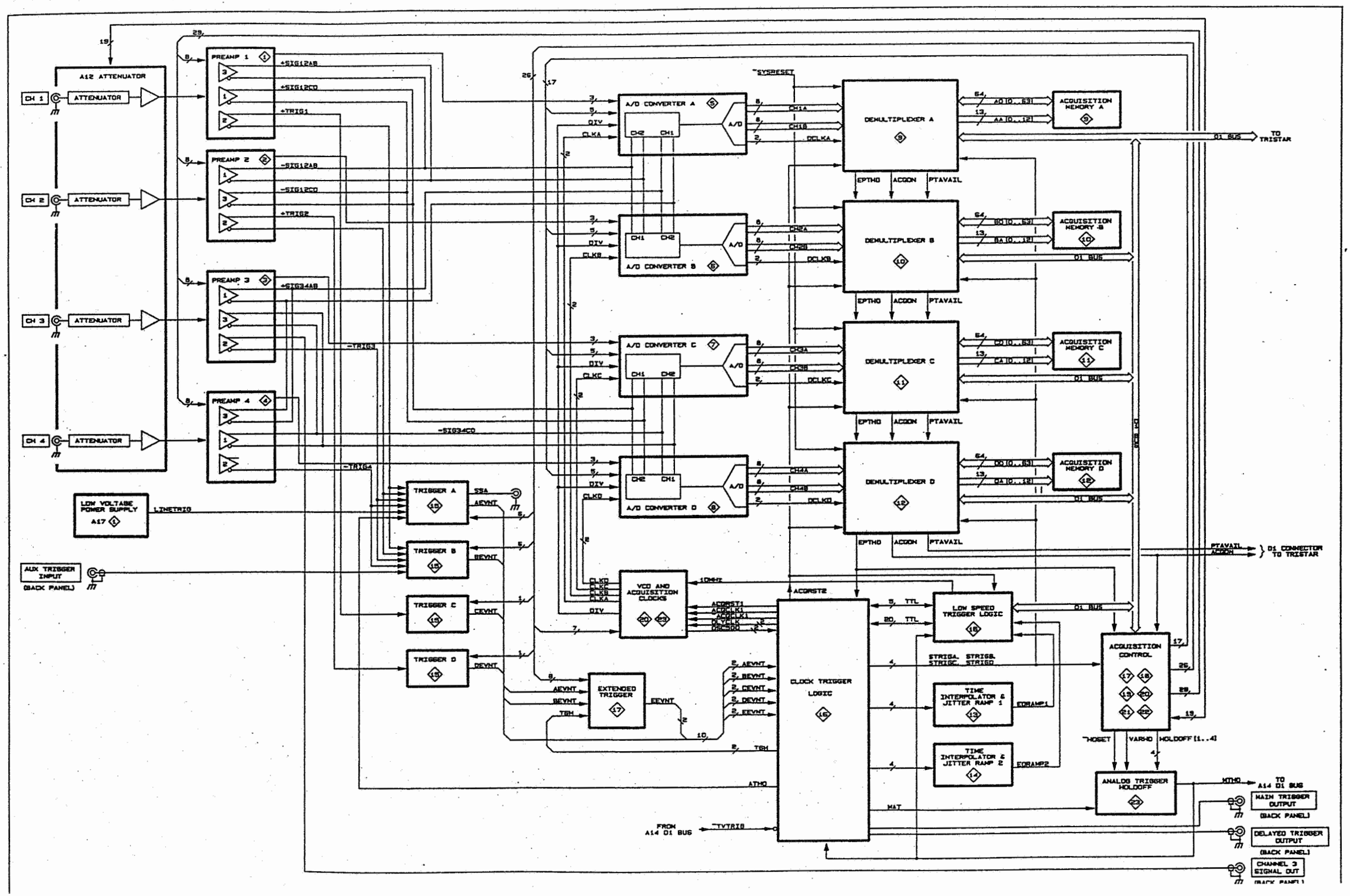

Scan by vintageTEK - Your donations help support the museum - vintagetek.org

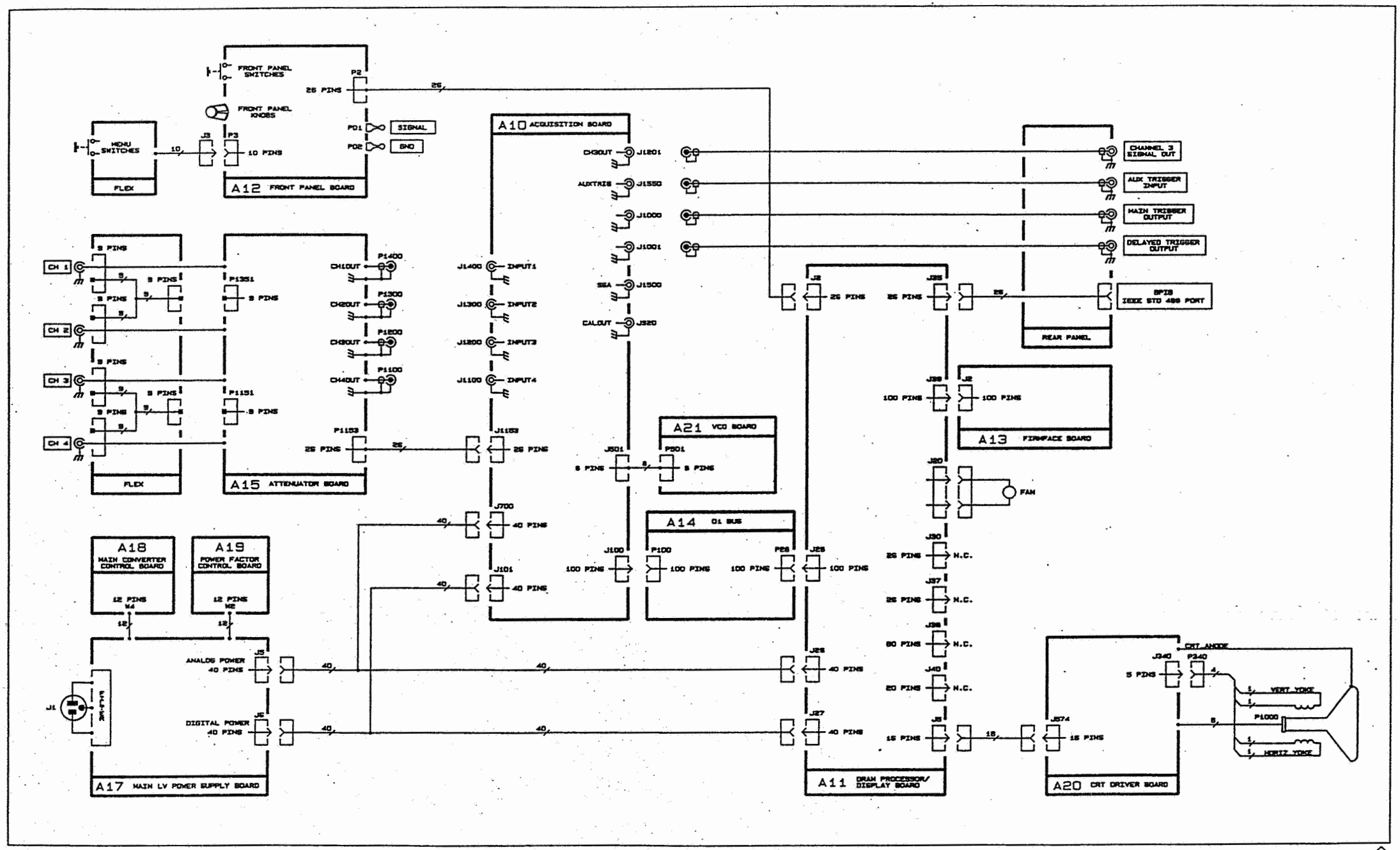

Scan by vintageTEK - Your donations help support the museum - vintagetek.org