Strain Gage Measurement Concepts

Tektronix, Inc.

STRAIN GAGE MEASUREMENT CONCEPTS

Les Hurlock

Tektronix, Inc.
Marketing Technical Training Department
P.O. Box 500
Beaverton, Oregon

062-0710-00

CONTENTS

CONTENTS (continued)

SECTION I

STRAIN GAGE MEASUREMENT CONCEPTS

Introduction

The strain gage as a basic tool has been in wide use in the structural testing field for many years. As a result, the stress analyst has developed techniques to realize the full potential of the strain gage as a measurement device. Outside of this field, however, the strain gage, as a basic tool, is a relatively unknown device.

There are several reasons for this -- the major one being the need for several conversion steps between the quantity being measured and the eventual readout.

Figure 1-1 shows that the strain gage as a force transducer involves both physical and electrical calculations in order to provide meaningful readout.

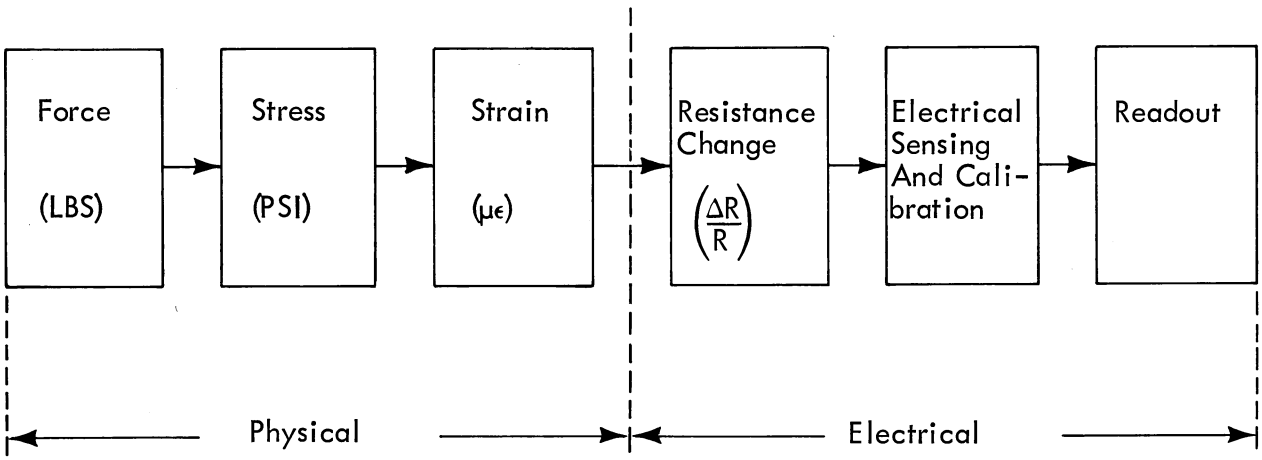

Conversion Steps From Quantity Being Measured to Eventual Readout

Figure 1-1

Applying a strain gage to a structure and connecting it to a readout device without prior calculation and/or final calibration is equivalent to connecting a meter into an unknown circuit and observing the results on a blank dial.

With relatively simple structures such as rods, bars and tubes, prior calculation can yield results within ±10% without involving much work. If the system can be calibrated (by the application of known loads), the overall accuracy can be brought within ±3% with an inherent non-linearity of <.5%.

The readout device can be anything from a null-balancing galvanometer to a cathode ray oscilloscope with storage facilities. The oscilloscope is particularly useful for dynamic testing because it can match the full capabilities of the strain gage in terms of frequency response. For this reason, the cathode ray oscilloscope will be given as an example of the readout device; both DC and carrier systems will be discussed.

Three simple transducers are described in the text to illustrate the three basic strain measurements: the tension-compression strains, the bending strains, and the twisting strains (torque).

Commercial Transducers

The strain gage is the basic building block used in many commercial transducers. An understanding of the basic building block can be helpful in correctly applying the selection of commercial transducers to the job in hand. (See Appendix - commercial transducers -- interpreting sensitivity specs.)

SECTION II

THE BONDED RESISTANCE STRAIN GAGE

Stress - Strain Relationship

Strain (ϵ) is a dimensional change occuring in materials as a general result of stress (σ).

Strain, then, is a physical property that can be measured. Figure 2-1 shows the relationship between stress and strain for carbon steel loaded in tension ----- this is called a stress-strain curve.

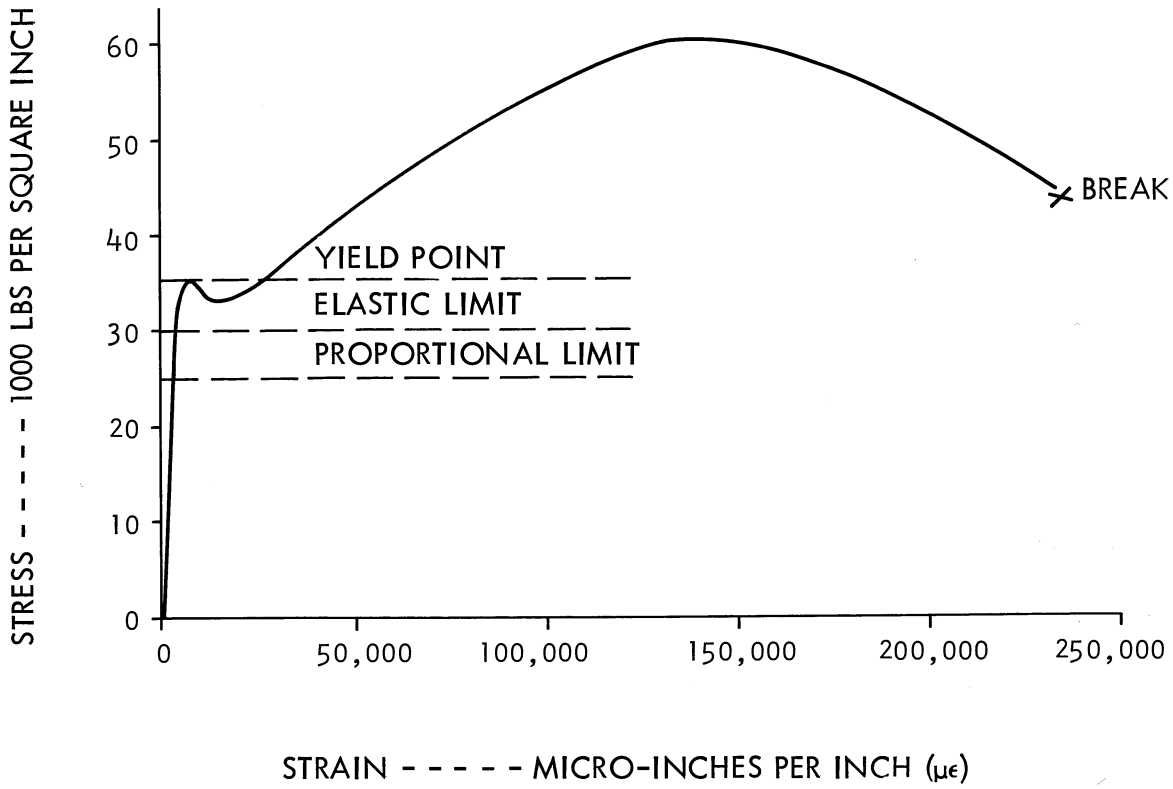

Figure 2-1

Stress-Strain Curve, Terminology

Stress (σ) — Stress is force per unit area, and is usually measured in lbs per square inch (PSI).

Strain (ϵ) — Strain is change in length per unit length. It is measured in micro-inches per inch, referred to as micro strain ($\mu\epsilon$).

$$\mu\epsilon = \Delta L/L \times 10^6$$

Strain can also be referred to as percent strain. For example:

1% strain = 10,000 $\mu\epsilon$

$$\frac{10^6\ \mu\epsilon \times 1\%}{100} = 10^4\ \mu\epsilon = 10{,}000\ \mu\epsilon$$

Proportional Limit

This part of the curve follows Hooke's law of proportionality. The stress-strain relationship is essentially linear* from the point of origin to the proportional limit. All strain gage transducers used as precision measuring devices operate well within the proportional limit. The linear area also extends through zero, in the minus direction, for compressive strains.

Elastic Limit

The elastic limit denotes the point at which the strain will no longer return to zero when the stress is removed. For practical purposes, the elastic limits and the proportional limits can be considered close enough to have the same value. It will be noted that it is not possible to determine the elastic limit from inspection of the stress-strain curve. This information can only be obtained by cycling the material with an actual load.

*Typical commercial load cells exhibit non-linearities of <.2%.

Yield Point

At a certain stress, low carbon (soft) steels will show a relatively large increase in strain, and a resultant permanent set when the stress is removed. This is called the yield point. Refer to Figure 2-1.

Yield Strength

Hard steels and brittle metals, such as cast iron, do not have the characteristic knee of the softer metals (Figure 2-1); therefore, they do not have a yield point. In order to classify these metals, the offset method is used.

If the metal is stressed to a certain point and then the stress is removed, a certain permanent set will result. This permanent set (given as percent offset) is referenced to the maximum stress that caused the offset.

Figure 2-2 shows a stress-strain curve for stainless steel. If the metal is stressed to point Y and then the stress is carefully reduced to zero, the stress-strain characteristic will follow the line Y-X, which is approximately parallel to the first proportional area. Point X is the permanent offset, caused by the stress at point Y.

Youngs Modulus of Elasticity

Youngs modulus (E) is a measure of the elastic deformation of a metal when stressed in tension or compression <u>within the proportional limit</u>. Its value is equal to the ratio of stress (σ) to strain (ϵ) and is represented by the initial slope of the stress-strain curve. See Figures 2-1 and 2-2.

$$E = \frac{\text{Stress}}{\Delta L/L} = \frac{\sigma}{\epsilon}$$

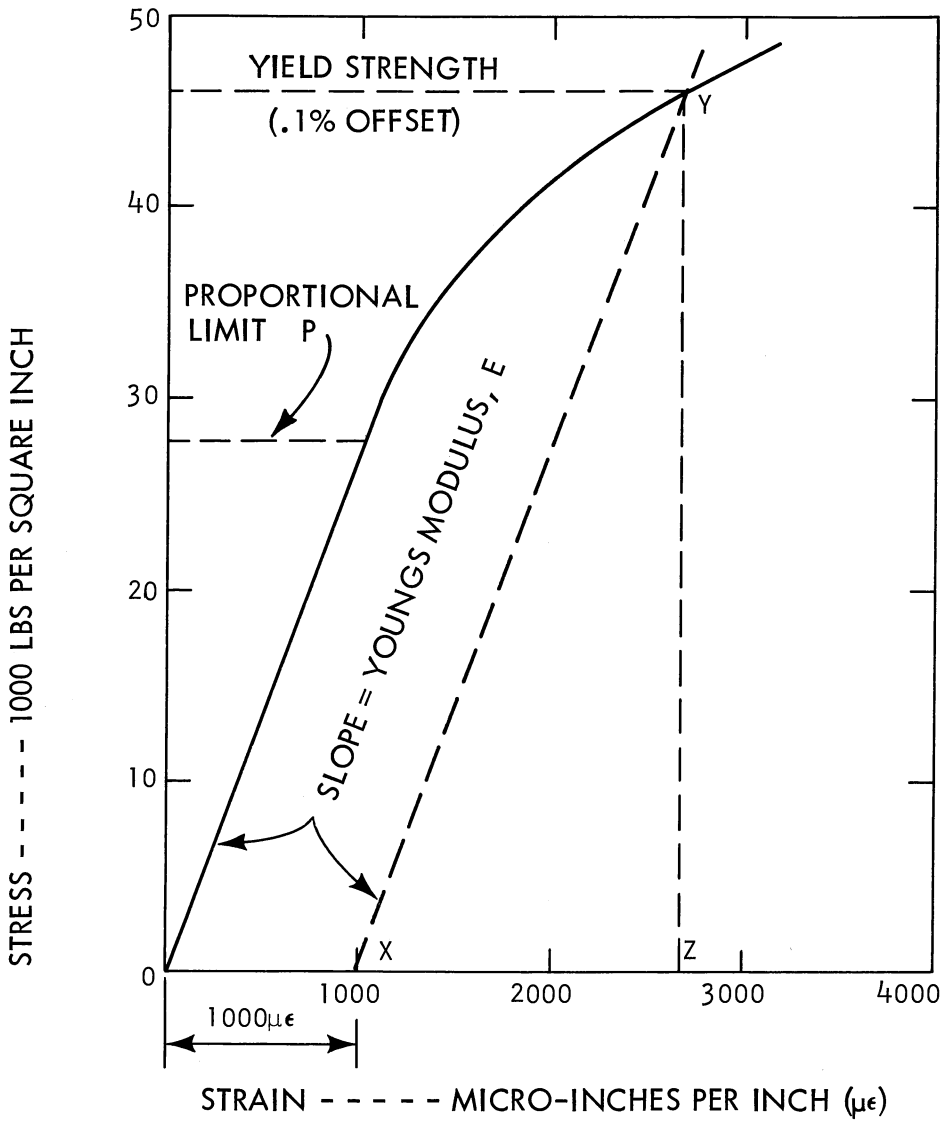

Figure 2-2

Figure 2-2 shows a yield strength for stainless steel of ≈47,000 PSI at .1% offset.

Youngs modulus for a certain metal remains essentially constant, regardless of treatment, alloying or manufacturing technique. For example, youngs modulus for steel is approximately 3×10^7.

Poissons Ratio

When a metal is subjected to a uniaxial tensile stress, it will elongate, and in an attempt to retain its original volume, it will also decrease its cross section.

In compression, a decrease in length is accompanied by an increase in cross sectional area. The ratio of the strain in a laterial direction to the strain in a longitudinal direction - - - under conditions of uniaxial stress within the proportional limit - - - is known as Poissons Ratio (μ). Poissons Ratio is between .25 and .33 for most metals, a typical figure being .28.

The Resistance Strain Gage

If a long thin wire is stretched, its initial resistance will increase, for two reasons.

1. The resistivity of a wire is specified in ohms per foot. If the length is increased, the total resistance will increase.
2. When a wire is stretched, its diameter will decrease in a proportion determined by Poissons Ratio. This ratio is usually about .28.

The resultant decrease in cross sectional area also increases the total resistance.

These two effects combine to produce a characteristic strain sensitivity for a given wire type.

$$\text{Strain Sensitivity} = \frac{\Delta R \text{ per } R}{\Delta L \text{ per } L} = \frac{\Delta R/R}{\epsilon}$$

Gage Factor

When a wire (typically .001" diameter) is folded to form a grid, encased in a base material and bonded to a structure, the strain sensitivity is referred to as the Gage Factor.

The Gage Factor will be somewhat less than the strain sensitivity of the wire. Two of the factors which modify the strain sensitivity are described below.

1. Dead Resistance:

   Dead resistance can exist whenever the strain gage wire is folded to form a grid. Dead resistance is that area not acted upon by strains parallel to the gage axis. Figure 2-3 shows the effect, exaggerated for clarity.

   The ratio of dead resistance to total gage resistance will depend upon the type of fold and the length of the grid.

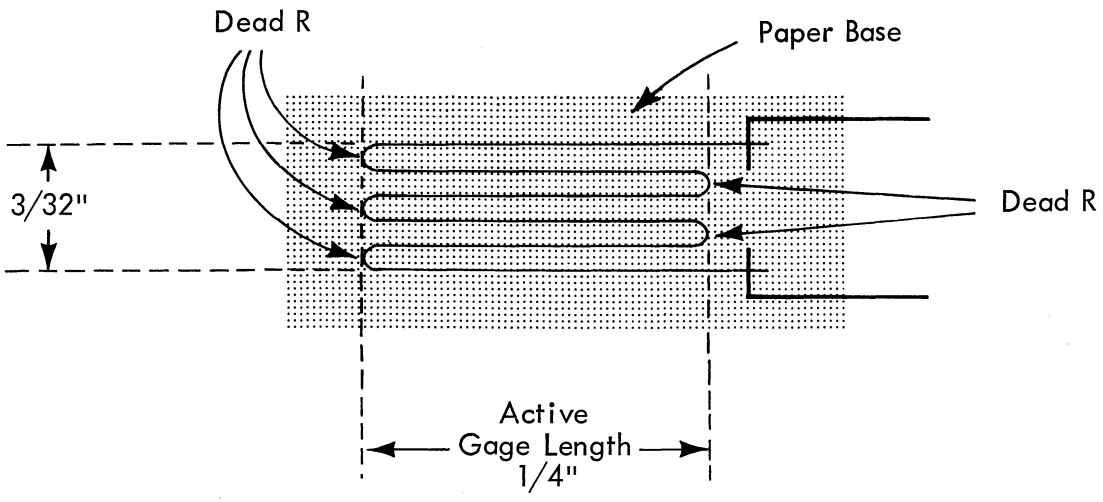

Typical Strain Gage -- BLH Electronics Type A7, 120Ω

Figure 2-3

2. The Poisson Effect:

If a structure is subjected to a uniaxial stress normal to the gage axis, the gage may sense two strains: the principle strain, parallel to the gage axis; and the Poisson strain at right angles to the gage axis.

If the gage has appreciable dead resistance, it will exhibit transverse strain sensitivity. This sensitivity is typically between +1% and +2% of the on-axis sensitivity.

It will be seen that the Poisson strain will act to oppose the major strain output, thus reducing the overall gage sensitivity.

Important

Dead resistance and transverse sensitivity normally act to reduce the initial strain sensitivity of the wire. This modified sensitivity is known as the Gage Factor.

The manufacturers of strain gages determine the Gage Factor by mounting sample gages on a standard test fixture. The test fixture has a Poissons Ratio of .28 and is subjected to a uniaxial calibrated stress.

It will be seen that the Gage Factor includes the effects of dead resistance, the Poissons Ratio of the structure, and the gage Transverse Strain Sensitivity. The net result is a true "major axis" sensitivity rating for most applications.

The Gage Factor for resistance strain gages is typically about two:

$$\frac{\Delta R/R}{\Delta L/L} = \frac{\Delta R/R}{\epsilon} \approx 2$$

<u>For Example:</u>

A 120Ω gage with a gage factor (GF) of 2, ±2%, changes resistance by 120 milliohms (.12Ω).

120 milliohms per 120 ohms = 1 milliohm per ohm = 1000 μΩ/Ω

Therefore, Strain $(\epsilon) = \frac{\Delta R/R}{GF} = \frac{1000}{2} = 500\ \mu\epsilon$

SECTION III

SELECTION OF STRAIN GAGES

There are many hundreds of strain gage types available to the user. Strain gage manufacturers distribute comprehensive information on the selection of strain gages. For example, B.L.H. Electronics publishes a very useful pamphlet entitled, "Selecting a Strain Gage". Because of the wealth of literature on the subject, only the more general characteristics will be discussed here.

Physical Size

Gages come in grid lengths from under 1/16" to 6" and grid widths from a single strand to 3/16". The gage carrier is usually either paper or bakelite, depending upon the application. The gage carrier can be trimmed down close to the grid where space is a problem, but this should not be done unless absolutely necessary.

Operating Temperature

Nitro-cellulose bonded paper gages can operate from -100°F to +150°F.

Bakelite gages can operate from -100°F to +300°F.

The temperature range can be extended in both directions when measuring dynamic strain without regard to static strain.

Temperature Compensation

Most general purpose gages are made of Constantan and are not temperature compensated. These gages can be used singly for measuring dynamic strain or for measuring short-term

static strains where the temperature is held constant over the test period. However, these gages are usually used in pairs or in a full bridge configuration where mutual temperature compensation can be employed.

In static testing, where there is only room for one gage, a Temperature Compensated gage should be used. These gages are designed to give compensation over a specific temperature range and on a specific material.

For example, BLH Electronics type EBF-13D could be used on duraluminum or aluminum; if the test material is steel, a type EBF-13S could be used.

For most applications, the general purpose non self-compensated gage is used, provided that the bridge configuration is designed to effect mutual cancellation of temperature errors.

Static Strain Versus Dynamic Strain

The measurement of long-term static strains imposes the greatest demands on strain gage performance. For example, the following changes will show up as apparent strain.

1. Uncompensated temperature changes.
2. Bonding errors that may cause gage creep, reduction of the gage factor, and hysteresis effects.
3. Deterioration of the bond due to humidity and/or embrittling of the cement.

The bakelite gage is better suited for long-term static strain measurement because it is inherently less hygroscopic than the paper based gage. However, if the paper gage is properly applied and waterproofed, it is capable of relatively long-term performance.

Strain Limits

Most strain gages will measure up to 1% strain (10,000 $\mu\epsilon$). This strain is beyond the elastic limit of most materials, including Constantan, a common gage material. The ability of the strain gage to follow large strains involves the support provided by the bonding material. For example: a 1 mil wire, one inch long has a surface area 4000 times its cross-sectional area. The bonding and supporting effect of the cement is great enough to control the wire grid both in tension and compression beyond the limits normally associated with the wire type.

However, for transducer applications, the maximum strain should be kept within 2000 $\mu\epsilon$ for repeatability and good linearity.

Resistance Strain Gage Linearity

For all practical purposes, the resistance change versus strain relationship is linear. For example, if the strained member is kept well within its elastic limits, the non-linearity of ΔR versus ϵ is in the order of 0.1 to 0.2%.

Special Strain Gages

There are many other special gages available for specific purposes: The multiple grid gages, the post-yield (high elongation) gages and the foil gages -- to name a few, however, they are all basically instrumented in the same manner.

Semiconductor Strain Gages

The semiconductor gage is characterized by its high gage factor. For example, an N-type semiconductor gage might have a GF of -120, and a P-type might have a GF of +120. These are average values. The GF can range from 50 to 250 (+ or -).

The obvious advantage of the semiconductor gage is its greatly increased sensitivity. Relatively simple circuitry can be used to provide direct readout, however, the semiconductor gage suffers from a high degree of non-linearity, making special circuitry necessary in order to realize its full potential. Semiconductor gages are currently rather expensive; costing more than $10.00 each.

Strain Gage Costs

The purpose here is to give some idea as to the relative costs of strain gage types so that the user will have some idea as to the eventual costs of instrumentating a structure.

Small paper based gages: From $1.50 each to over $3.00 each.
Temperature compensated, bakelite base: From $6.40 each to $8.00 each.
Special gages can run over $10.00 each.

Most gages are packaged in lots of five; gages identified by the same lot number have common resistance values, gage factors, and tolerances.

To avoid complications and possible readout errors when using more than one gage in a bridge, the gages should be from the same lot number.

SECTION IV

STRAIN GAGE INSTALLATION

The strain gage cannot perform as a precision measuring instrument unless it is applied properly to the member being sensed. Structural test people know the importance of the care and handling of strain gages and have developed it to a fine art. This does not mean, however, that the first-time user cannot make a successful strain gage installation -- only that care should be exercised in following the recommendations of experts*.

General

The exact location for the gage/gages should be marked on the structure. The bonding area should be slightly roughened and cleaned with carbon-tetrachloride or acetone.

The type of bonding cement will depend on the type of gage (paper or bakelite) and on the eventual use.

Generally, paper gages are applied with nitro-cellulose cement, such as "Duco"; however, epoxy cement can also be used. Both these cements will cure at room temperature; nitro-cellulose requires about 12-48 hours, while epoxy requires between 1/2 hour to several hours. Bakelite gages should be applied with bakelite cement, however, this cement requires oven curing over a 5-6 hour period at approximately 250° - 350°F. When bakelite gages cannot be baked on, they can be applied with epoxy cement.

All gages should be held in place during part of the curing cycle with suitable pressure pads.

* The Strain Gage Primer, Perry and Lissmen, McGraw-Hill.

Some Tests for Correct Bonding

When paper gages are applied with nitro-cellulose cement, the resistance from gage to ground can be used as an indication of adequate curing.

For example, a freshly applied gage has a resistance to ground of a few hundred thousand ohms. As the cement dries the resistance will rise. A gage can be considered ready for use when the leakage resistance is in the order of fifty megohms.

Partial Bonding and Gage Creep

A strain gage installation should hold its indicated strain when stressed with a static load. Furthermore, the indicated strain should return to zero when the load is removed. Failure to do this would indicate gage creep, or hysteresis. A strain gage installation should exhibit equal sensitivity for both plus and minus strain. Unequal +- sensitivity suggest partial bonding.

SECTION V

MEASUREMENT OF LONGITUDINAL STRAIN

It will be remembered from Section I that several conversion steps are required between the quantity being measured and the eventual readout (see Figure 5-1).

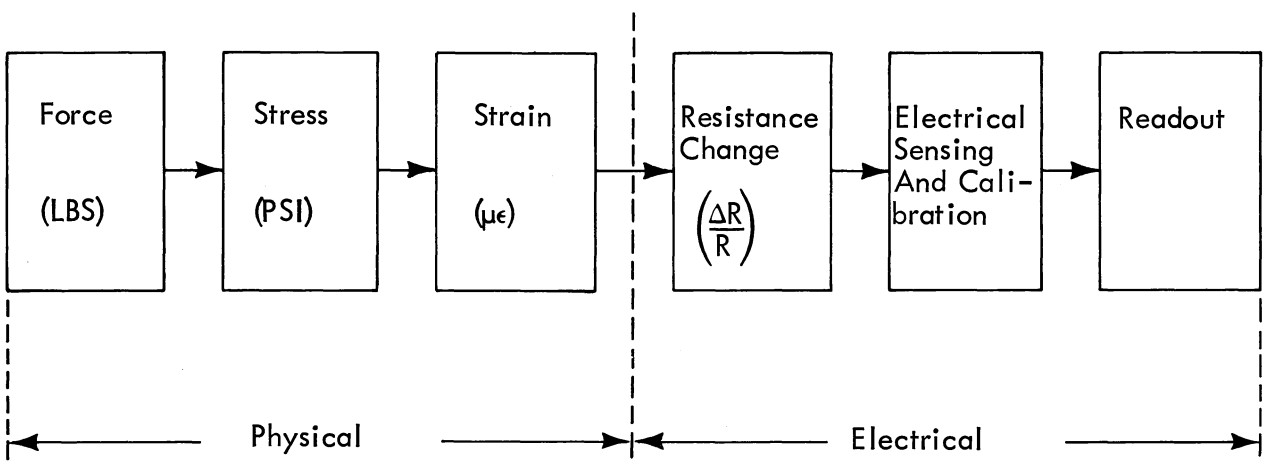

Conversion Steps From Quantity Being Measured to Eventual Readout

Figure 5-1

In order to illustrate these conversion steps in a practical manner, a simple force transducer was constructed. The design factors involved in this type of transducer can be applied to a wide range of force measuring devices using, as a basic principle, the sensing of longitudinal tensile/compressive strains.

Transducers employing the principles of bending strains and torsional strains will be discussed in later sections.

A STRAIN GAGE FORCE TRANSDUCER

Design Considerations

Quantity to be Measured	Force (weight)
Range	25 pounds to >1000 LBS
Static or Dynamic	Short-Term Static
Resolution	Within 5 pounds
Calibrated Accuracy	±5%
Non-Linearity	<1%
Bridge Sensitivity	≈10 με per 25 pounds
Readout System	Carrier Amplifier/Oscilloscope

Two approaches can be used in the design of a transducer of this type.

1. Calculations can be made to determine the material type and cross-sectional area necessary to give the required sensitivity and dynamic range.
2. Calculations can be made on a given material and cross-sectional area to determine if the resultant transducer can perform within the prescribed limits. The latter course will be taken here.

A $.49 screw eye was chosen as the transducer body. The screw eye is 8" long and has a measured diameter of .445". See Figure 5-2.

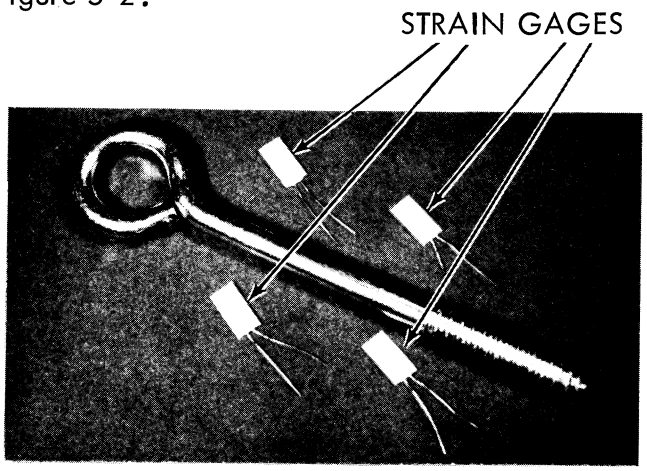

Figure 5-2

If two of the gages are to be applied transversely on the transducer, the body diameter will determine the maximum allowable length of the gage. In this example, BLH Electronics Type A8 gages were used. These have a grid length of 1/8". This particular lot number had a nominal resistance of 120Ω ±.3%, and a gage factor of 1.89 ±2% (see Figure 5-2).

Step 1

Find the cross-sectional area.

$A = \pi r^2 = .155 \text{ sq}''$

Step 2

Find the stress (σ)

$$\sigma = \frac{F}{A} = \frac{25^*}{.155} = 161 \text{ psi}$$

σ = Stress, PSI

F = Force, LBS

A = Area, Sq"

* 25 lbs is the minimum force of interest. It should correspond to a bridge output of at least 10 $\mu\epsilon$. A typical carrier amplifier will have a maximum sensitivity of 10 $\mu\epsilon$/cm with a readout resolution of at least 2 mm, therefore, 2 mm could be made to equal 5 lbs.

Step 3

Find the strain (ϵ).

$$\epsilon = \frac{\sigma}{E} = \frac{161}{3 \times 10^7} = 5.36 \ \mu\epsilon$$

σ = Stress, PSI

E = Youngs Modulus of Elasticity $\approx 3 \times 10^7$ for Steel

A force of 25 lbs will, therefore, produce a longitudinal strain of 5.36 με (see Figure 5-3). One gage bonded to the surface of the screw eye would measure this strain amplitude. There are, however, a number of reasons why only one gage would be unsatisfactory in this application.

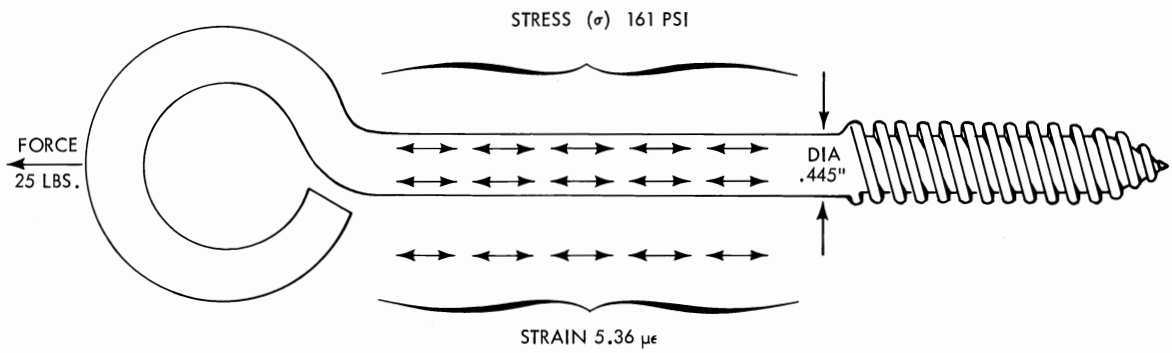

Figure 5-3

Step 4

Determine bridge configuration.

Using a single gage:

a. A single gage will not product sufficient sensitivity in this application.

b. A single gage would have no means of temperature compensation unless a suitable temperature-compensated type were used.

c. A single gage would be much more sensitive to bending strains than to tension strains in this application. At a force of 25 lbs, the unavoidable bending strain due to off-axis loading would mask the desired output.

Using Two Gages

Two longitudinal gages placed diametrically opposite each other will double the output and cancel the minor bending strain when connected in opposite arms of the bridge. However, with only two gages, the apparent strain with temperature change will be additive.

Using Four Gages

Figure 5-4 shows a satisfactory arrangement using a full bridge.

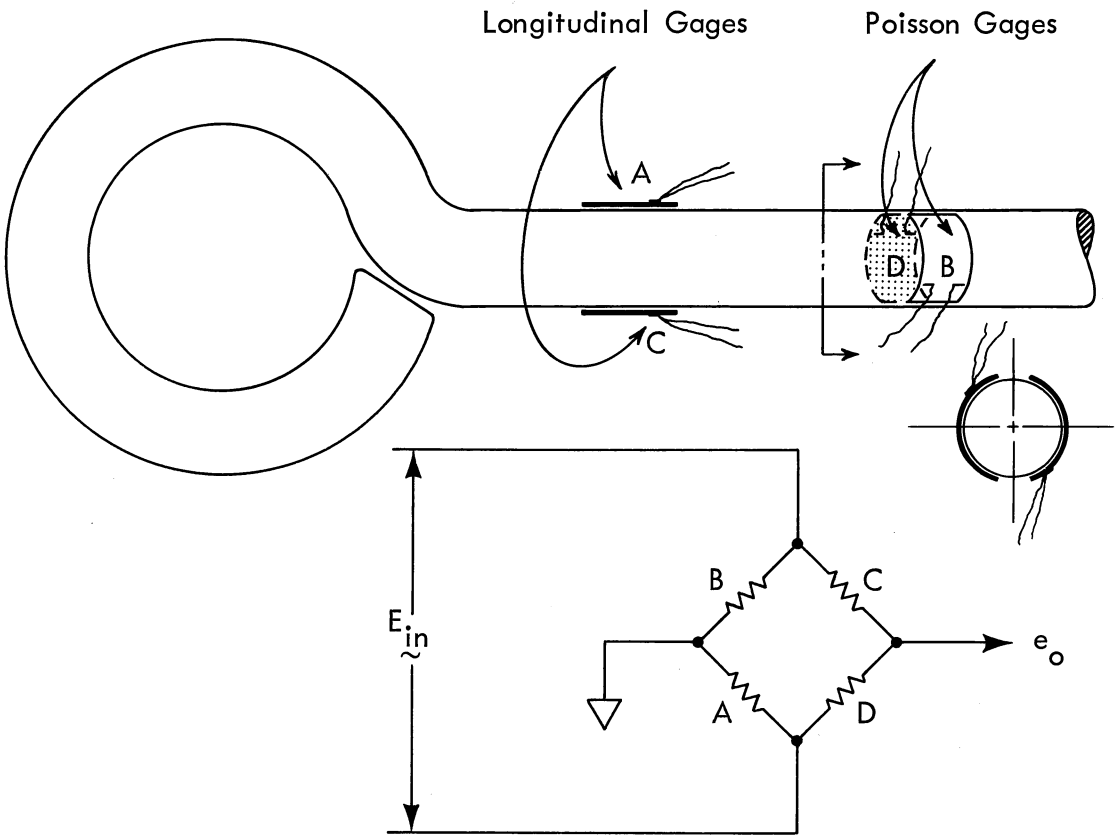

Location of gages to provide:

1. Increased output.
2. Cancellation of bending strain.
3. Temperature compensation.
4. Utilization of the Poisson output.

Figure 5-4

In order to achieve temperature compensation, two more gages are added to the transducer body so that all four gages sense the same temperature change.

These extra gages could be dummy (passive) gages, however, in this application it is possible to pick up a bonus output by utilizing the Poisson Effect.

The poissons ratio is ≈.28, therefore, gages B and D in Figure 4 will each have minus .28 times the output of the longitudinal gages.

For a force of 25 lbs:

Gage A =	5.36 με
Gage C=	5.36 με
Gage B = 5.36 x .28 =	1.5 με*
Gage D = 5.36 x .28=	1.5 με*
	13.72 με

*The poisson strain is of opposite sign to the principle strain. This output becomes additive when placed in the bridge arrangement shown in Figure 5-4.

It will be seen that relatively simple calculations will give information on the expected output (in με). If there were no means of calibrating the transducer, the system can be assumed to be within ±10%.

The inherent linearity of strain gages working well within the elastic limits of the strained member is well within 1%. Therefore, if the transducer/system can be calibrated at one or two points, the measurements can be relied upon over the designed operating range, possibly within ±3%.

For example: Assuming the screw eye material has a yield point of only 24,000 PSI (soft steel), this corresponds to a force of 3700 lbs (longitudinal strain, 800 $\mu\epsilon$).

$$F_{yield} = A\sigma = .155 \text{ sq"} \times 24{,}000 \approx 3700 \text{ lbs}$$

As the upper force of interest is 1000 lbs, the transducer can be expected to operate well within its elastic limits.

Step 5:

Determining the Readout System

It was mentioned in Section 1 that the cathode ray oscilloscope would be used as the final readout device. There are many possible arrangements but only two will be given here -- the DC system and the carrier system.

1. The DC System

   Requirements:

   a. An oscilloscope with a vertical system sensitivity that is compatible with the lowest strain gage output of interest.

   b. Frequency response from DC to some upper figure, determined by the highest expected strain frequency (dynamic tests) and by the physical size of the strain gage (see Section VI, Strain Gage Frequency Response).

   c. An external bridge balancing and calibrating network.

   d. External power supply.

   See Figure 5-5.

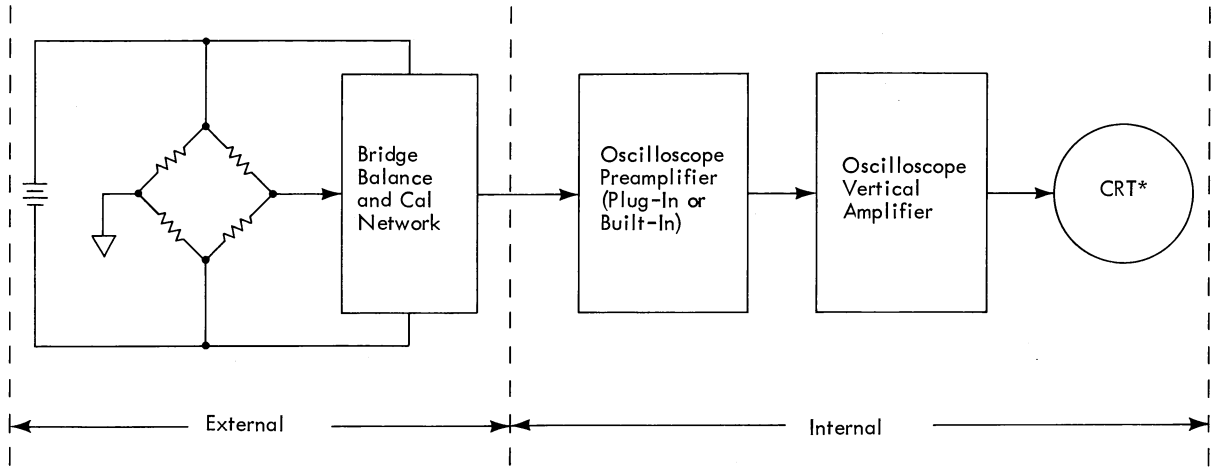

DC BRIDGE SYSTEM

*Cathode Ray Tube

Figure 5-5

Disadvantages of the DC System

The DC system basically readouts out in volts per cm. An additional conversion step is necessary to get from calculated $\mu\epsilon$ to calculated output voltage (see Section VII, Page 7-10).

The DC system might pick up noise, hum, and radio frequency interference unless provision is made for attenuating these products (see Noise Rejection, Section VII, Page 7-12).

The DC system might amplify thermal E.M.F.'s caused by temperature differences between dissimilar-metal junctions in the bridge or input circuitry.

Advantages of the DC System:

Most DC systems will have a wider frequency response than the carrier system. Typical carrier system response, DC to 6 kHz. Typical DC system response, DC to ≈100 kHz. Stray capacitance in the bridge or connecting cable does not influence the readout.

2. The Carrier System

Requirements:

Sensitivity and frequency response requirements are the same as with the DC system. However, no external equipment is generally necessary.

General Description:

The carrier amplifier system is primarily designed to make strain gage measurements. For this purpose, the carrier amplifier has a self-contained AC bridge supply, built-in bridge balancing circuitry and means for calibrating the transducer. (See Figure 5-6.)

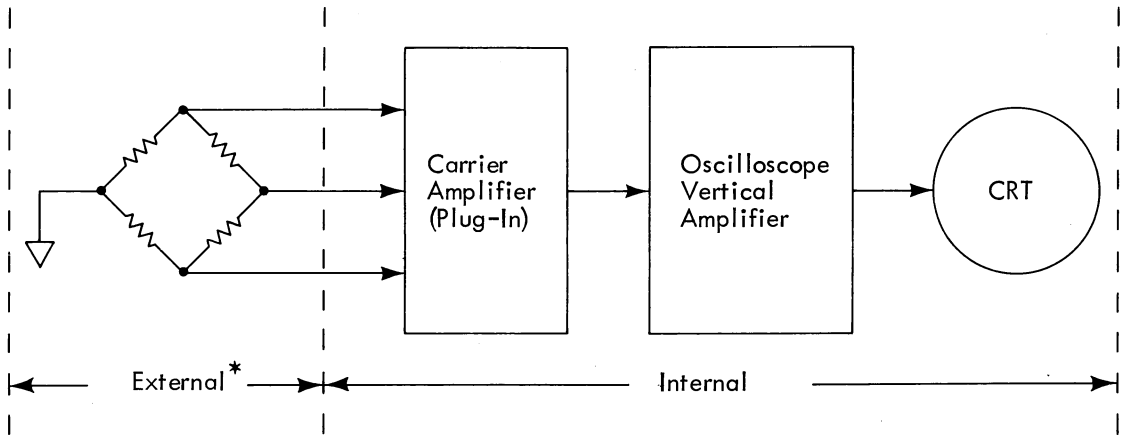

CARRIER AMPLIFIER SYSTEM

Figure 5-6

*Figure 5-6 shows a bridge with four external arms. If a bridge has less than four external arms, the bridge can be completed by switch-selected resistors contained within the carrier amplifier.

A typical carrier amplifier will give a choice of 0 - 1 - 2 - 3 or 4 external arms.

Advantages of the Carrier Amplifier System

The carrier amplifier can be calibrated directly in $\mu\epsilon$ per cm -- all that is required is information on the total bridge output in $\mu\epsilon$, the nominal strain gage resistance, and the gage factor (see Page 5-12).

The carrier system generally has more useable sensitivity than the DC system. For example, for a DC system to display 10 $\mu\epsilon$ per cm (with the same bridge power as the carrier system), the vertical amplifier would have to have a sensitivity of $\approx$25 μv per cm. At this sensitivity, noise and drift might be troublesome.

The screw eye force transducer would be most compatible with the carrier amplifier system in terms of available output and ease of readout. The calibration of this system will be described next.

Calibrating the Transducer/Carrier Amplifier System:

Whenever possible, every transducer system should be calibrated by actually applying a known load to the transducer. This enables direct calibration of the readout device in terms of the quantity being measured.

However, it is not always possible to apply a known load. Whether or not this is the case, it is desirable to include a switchable "simulated strain" resistance in the bridge network. When this resistor is inserted in parallel with one of the gage arms, it simulates a calculated total strain in the bridge.

For example, if the 25-1000 lb screw eye transducer is to be used to weigh a few hundred pounds, it might be convenient to have a calibration check at 100 lbs.

Figure 5-7 shows the electrical position of the calibration resistor in the Type Q and Type 3C66 plug-in carrier amplifiers manufactured by Tektronix, Inc.

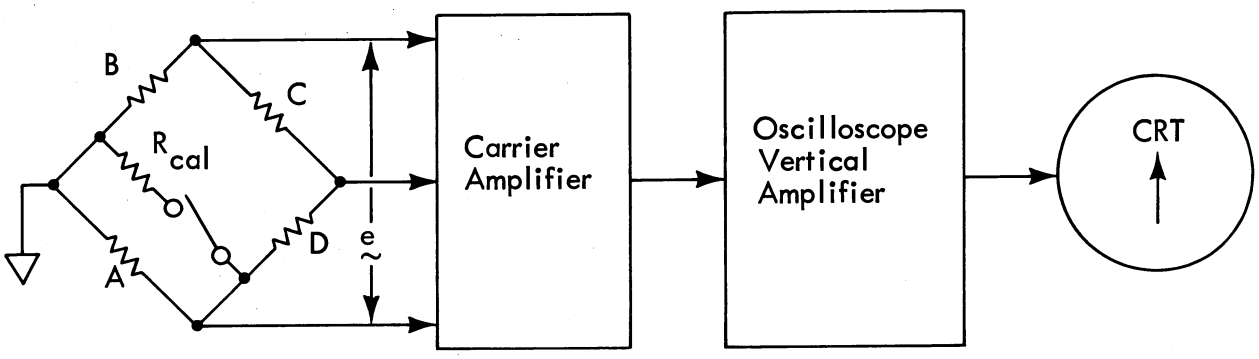

Increase in arm A resistance produces positive-going CRT deflection. Insertion of R_{cal} produces negative-going deflection (-strain).

Figure 5-7

Gage position A is used as the active arm when using a single gage. Therefore, these amplifiers are designed to give a positive* output when arm A increases in value (+ strain).

It will also be apparent that a positive output will result if arm C increases, or if arm B and/or D decrease in value.

*Positive-going CRT deflection.

In the strain gaged screw eye application, arm A represents one of the longitudinal gages. Therefore, a positive load will produce a positive output.

When the calibration resistor is applied in shunt with arm A, the result will be a reduction in resistance, corresponding to a minus strain of the desired amplitude.

$$R_{cal} = \left(\frac{R_g}{GF\,(\epsilon_{total})} \right) - R_g$$

R_g = nominal gage resistance

GF = gage factor

ϵ_{total} = desired calibration strain

R_{cal} = calibration resistor

Referring to page 5-6, it will be seen that a force of 25 lbs will produce a calculated total strain of 13.72 $\mu\epsilon$.

Therefore, 100 lbs should equal:

$$13.72 \times 4 = 54.88\ \mu\epsilon$$

$$R_{cal} = \left(\frac{120}{1.89^{*} \times 54.88 \times 10^{-6}} \right) - 120$$

$$R_{cal} \approx 1.16 \text{ megohm}$$

The calibration resistor can be used in two slightly different ways.

* This is the gage factor of the gages to be used (see page 5-3). Note also that this is the first time that the gage factor has been involved in the calculations.

1. CRT Readout in $\mu\epsilon$/cm: The calibration resistor simulates a -100 lb load (-54.88 $\mu\epsilon$). A carrier amplifier with a maximum switch-selected sensitivity of 10 $\mu\epsilon$/cm should produce approximately -5.48 cm of deflection when the calibration resistor is inserted. Carrier amplifiers have a gain adjustment that allows for differences in gage factor. (Most carrier amplifiers include a standard calibration resistor for simulating a standard strain. For example, -400 $\mu\epsilon$. This calibration assumes a gage factor of 2 and a gage resistance of 120Ω.)

   In this application the standard calibration resistor is replaced by the new 1.16 MΩ resistor.

   As the gages in question are other than 2 (1.89), a slight correction has to be made to the system gain to read in calculated $\mu\epsilon$/cm.

2. CRT Readout in lbs/cm: As the quantity being measured is force (lbs), it is desirable that the readout should be in lbs/cm.

   As the calculated strain per 25 lbs is 13.72 $\mu\epsilon$ -- slightly in excess of the 10 $\mu\epsilon$ minimum required for readability -- it is now quite acceptable to reduce the system gain (carrier amplifier gain adjustment) to make 25 lbs = 1 cm, instead of 1.37 cm.

   To do this, the calibration resistor is inserted and the carrier amplifier gain is adjusted to make 100 lbs = 4 cm (previously 100 lbs = 5.48 cm = 54.8 $\mu\epsilon$).

   This adjustment is made at the carrier amplifier's maximum sensitivity position of 10 $\mu\epsilon$/cm.

Carrier Amplifier $\mu\epsilon$/cm Switch

10 $\mu\epsilon$/cm	=	25 lbs/cm
20 $\mu\epsilon$/cm	=	50 lbs/cm
50 $\mu\epsilon$/cm	=	125 lbs/cm
100 $\mu\epsilon$/cm	=	250 lbs/cm

etc., etc., in 1-2-5 steps to

10,000 $\mu\epsilon$/cm = 25,000 lbs/cm

It will be seen that if the system is calibrated at one sensitivity setting, readings can now be made throughout the dynamic range of the transducer. This is done by changing the sensitivity setting of the calibrated (±2%) $\mu\epsilon$/cm switch.

Comparison of Calculated Sensitivity With Measured Sensitivity

The purpose of constructing the screw eye transducer was threefold:

1. To illustrate the conversion steps involved between the quantity being measured and the eventual readout.
2. To illustrate a practical bridge configuration involving longitudinal tension-compression strains.
3. To illustrate methods of calculating the output (sensitivity) expected from relatively simple structures, and/or to select the proper material and cross-sectional area to give the required sensitivity.

Test Results

The only purpose of the test was to check the validity of the calculations within the stated tolerance of ±10%.

A suitable cable was firmly attached to the transducer and wired into the bridge, and the gage area moisture-proofed with a silicone rubber compound (see Figure 5-8).

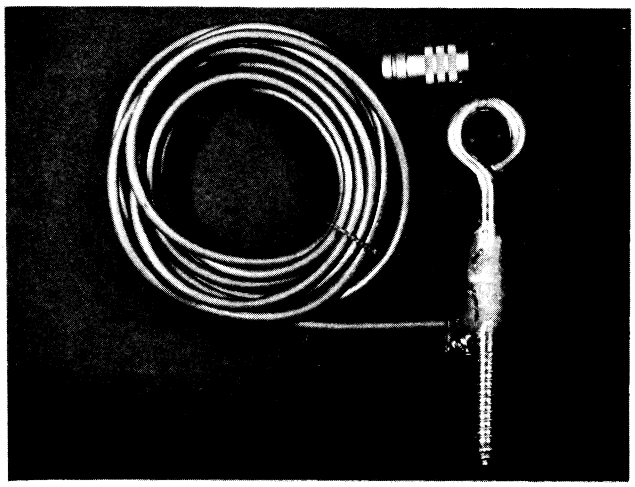

Figure 5-8

The transducer cable was connected to a Tektronix Type Q Carrier Amplifier/547 Oscilloscope combination.

First, the carrier amplifier gain was adjusted to display a simulated strain of 54.8 $\mu\epsilon$ when the calibrate button was depressed (inserting the 1.16 MΩ cal resistor). This equaled -5.48 cm of deflection at 10 $\mu\epsilon$/cm.

A spring scale was used to apply a 25 lb force to the screw eye. The result was a deflection of 1.4 cm, which equals 14 $\mu\epsilon$ (calculated strain for 25 lbs = 13.72).

Second, the CRT display was calibrated directly in lbs/cm (refer to CRT readout, page 5-13) by adjusting the carrier amplifier gain to display a simulated force of -100 lbs when the calibrate button was depressed (25 lbs per cm). The spring scale was again used to apply a force of 25 lbs to the screw eye. The result was a CRT deflection of 1 cm, equivalent to 25 lbs.

Similar experiments on other transducer types yielded results well within the ±10% initial tolerance requirement. In all the tests, the lack of accuracy and readability of the force applicators (spring scale or torque wrench), set a limit to the obtainable resolution (see Sections VII and VIII).

SECTION VI

STRAIN GAGE FREQUENCY RESPONSE

A strain gage normally averages the strain over the active gage length. When the actual gage length becomes a significant portion of the wave length of the strain vibration, errors will be introduced*.

When the wave length equals the gage length, the effective average strain in the gage will be zero (see Figure 6-1).

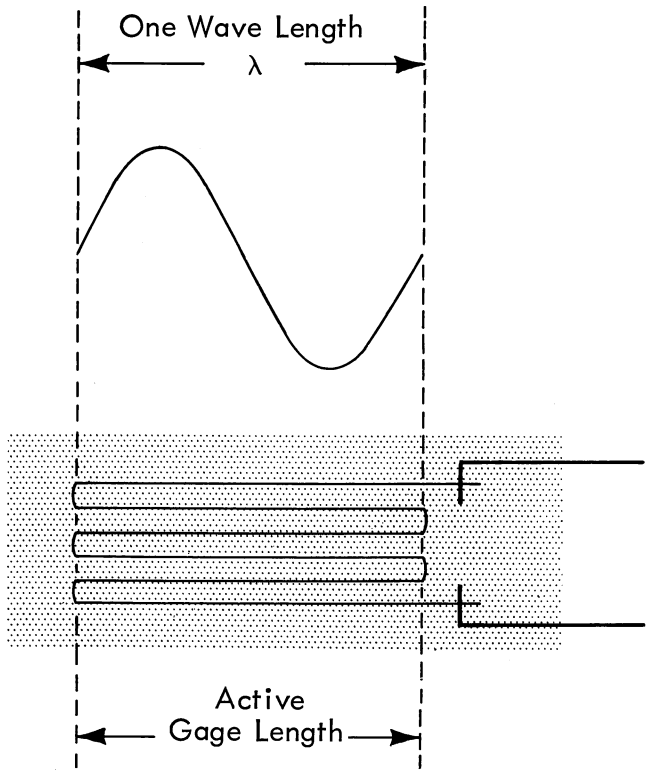

Figure 6-1

* Strain Gage Frequency Response, Peter K. Stein (Instruments and Control Systems, Volume 38).

As the frequency is further increased (wave length decreased), the gage will again produce an output; however, the amplitude of the output is no longer easily related to vibratory strain.

The foregoing phenomenon can be compared to a similar effect occurring in magnetic tape recording, where the output will be zero when the recorded wave length equals the playback head gap length.

Speed of Propagation

The speed of sound in metals such as steel and aluminum is approximately 2×10^5 inches per second.

$$\text{Speed of sound} = C = 2 \times 10^5 \text{ inches per second}$$

or

$$\frac{1}{C} = 5\ \mu\text{sec per inch}$$

Therefore, a strain gage with an active gage length of 1/4" will theoretically produce zero output when the dynamic strain vibration equals 800 kHz.

$$f = \frac{C}{\lambda^*} = \frac{C}{L}$$

$$f = \frac{2 \times 10^5}{.25} = 8 \times 10^5 \text{ Hz} = 800 \text{ kHz}$$

f = frequency of vibration in Hertz.

C = speed of wave propagation in steel $\approx 2 \times 10^5$ inches per second.

λ^* = wave length in inches - in this case, the active gage length.

L = active gage length in inches.

In actual practice, the gage output will probably reach zero before the theoretical point, due to the damping effect of the gage bonding cement.

In order to keep the error down to ≈-1%, the theoretical zero output frequency should be divided by a factor of ≈20. For example:

For a 1/4" active gage length, the upper frequency response (≈ -1%) will be:

$$f \approx \frac{C}{20L} = \underline{40\ \text{kHz}}$$

Cathode ray oscilloscope manufacturers usually specify the vertical system bandwidth in terms of the 3 dB down point; therefore, it may be more convenient to specify the strain gage response in terms of the 3 dB down point also. In this discussion, it is assumed that both the oscilloscope and the strain gage bridge respond to DC changes, so the upper 3 dB point becomes the only variable.

The theoretical upper frequency -3 dB point (-30%) for a bonded strain gage is approximately:

$$f_{-3\ \text{dB}} \approx \frac{C}{4L}$$

For a 1/4" active gage length, the upper - 3 dB point will be:

$$f_{-3\ \text{dB}} \cong \frac{2 \times 10^5}{4 \times .25} = \underline{200\ \text{kHz}}$$

Where two devices are joined in series, the -3 dB bandwidth of each device will combine to produce an overall system bandwidth which is somewhat less than the narrower bandwidth device.

$$BW_{system} = \frac{(BW_1)\ (BW_2)}{\sqrt{(BW_1)^2 + (BW_2)^2}}$$

If the oscilloscope -3 dB bandwidth is 200 kHz and the strain gage -3 dB bandwidth is also 200 kHz, the system bandwidth will be:

$$BW_{system} = \frac{(2 \times 10^5)\ (2 \times 10^5)}{\sqrt{(2 \times 10^5)^2 + (2 \times 10^5)^2}} \approx 140 \text{ kHz}$$

By knowing the system bandwidth, the user can determine if the <u>observed</u> vibration is falling within an area where the amplitude calibration can be relied upon.

<u>Transient Response</u>

The measuring instrument's risetime capability is related to the bandwidth by the following approximate formula:

$$T_R = \frac{.35}{BW}$$

As a rough guide, it would seem reasonable to take the system bandwidth (including the strain gage) and insert it in the formula in order to obtain an idea of the risetime capability of the system.

Again, this information could be used to determine if the <u>observed</u> risetime is a close approximation of the actual risetime.

As a guide, the system risetime should be approximately three times faster than the observed risetime.

SECTION VII

MEASUREMENT OF BENDING STRAINS

Many transducers obtain their output by measuring the bending strains produced in a moment arm. The output from this type of transducer is generally much greater than the straight compression-tensile type because of the magnification produced by the length of the moment arm.

Figure 7-1 shows the stress pattern produced within a beam upon application of a force.

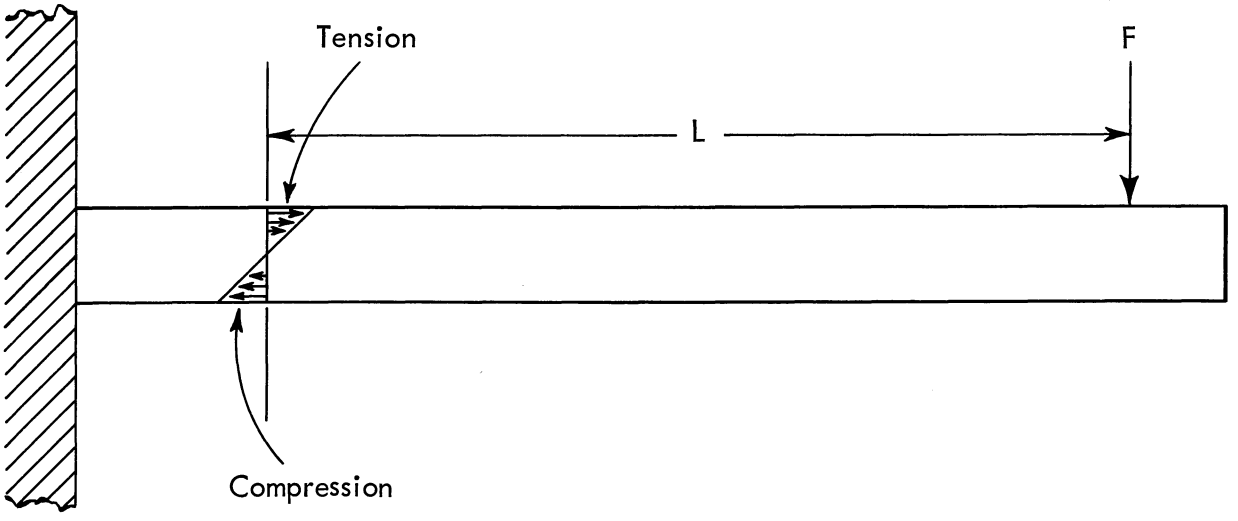

Cantilever beam, showing the equal and opposite stress pattern produced when the beam is deflected.

Figure 7-1

Accelerometers, differential pressure transducers and certain forms of torque wrench often use cantilever beams as the sensing member.

A Cantilever Beam Force Transducer

A simple strain-gaged cantilever beam will now be described. Calculations will be given to illustrate the conversion steps involved between the applied force and the eventual readout.

Two readout systems will be described: the carrier system and the DC system.

The design approach will be similar to that used in constructing the screw eye transducer in Section V. That is, to determine if the physical dimensions and the type of material making up the transducer body can produce sufficient output at the lowest force of interest.

Furthermore, information is needed on the dynamic range of the finished transducer. This is a function of minimum useable output at one end, and maximum acceptable stress within the proportional limit at the other.

Design Considerations:

Quantity to be Measured	Force (LBS)
Range	1 ounce to 2 LBS
Static or Dynamic	Short-Term Static
Bridge Sensitivity	$\geq 10\ \mu\epsilon$ at 1 ounce or $\geq 100\ \mu v$ at 1 ounce
Readout System	Carrier amplifier/oscilloscope or DC coupled oscilloscope

The transducer body used in this example is the familiar cantilever beam demonstration aid used in the demonstration of Tektronix carrier amplifier systems.

Figure 7-2 shows the principle dimensions of the aluminum cantilever beam.

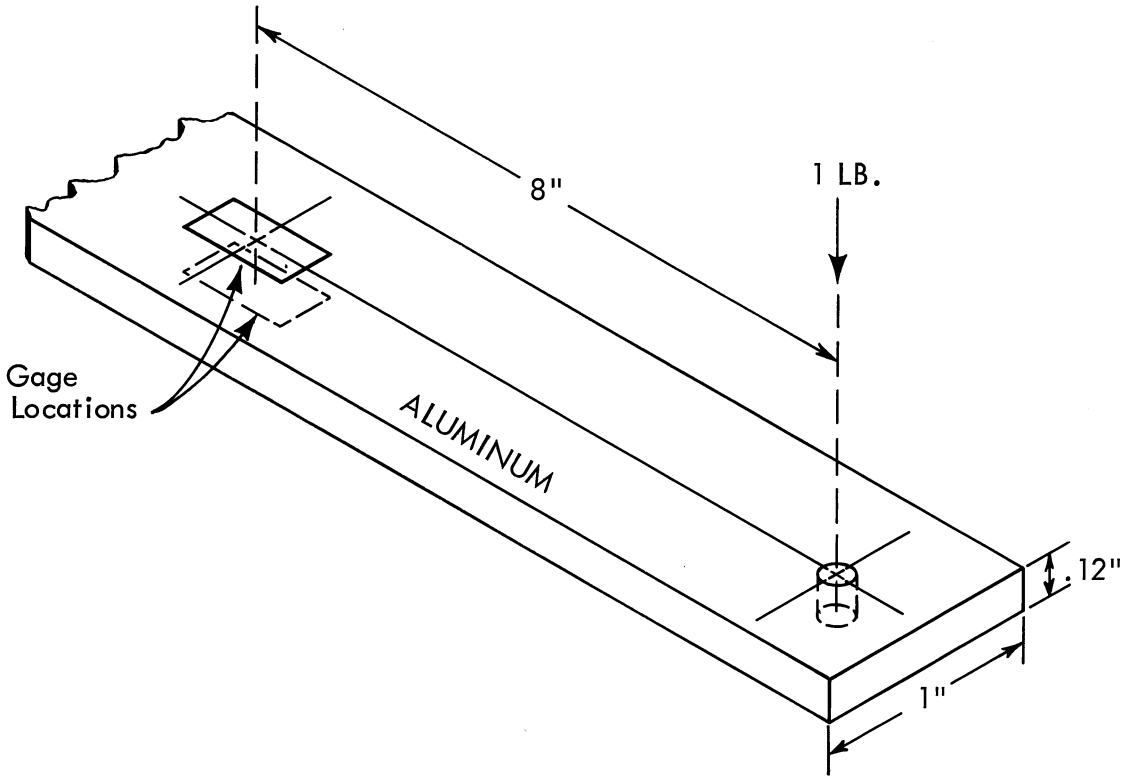

Figure 7-2

Step I

Find the section modulus.

Section Modulus (Z) = $\frac{WH^2}{6}$

Z = Section Modulus

W = Width

H = Height

$$Z = \frac{WH^2}{6} = \frac{1 \times .12^2}{6} = \frac{14.4 \times 10^{-3}}{6} = 2.4 \times 10^{-3}$$

Step II

Find the stress* for a force of 1 LB.

$$\sigma = \frac{FL}{Z} = \frac{1 \times 8}{2.4 \times 10^{-3}} = 3.33 \times 10^{3} \text{ PSI}$$

σ = Stress (PSI)

F = Force (LBS)

L = Length (from loading point to center of gage area)

* Surface stress at the gage application points.

Step III

Find the strain.

$$\epsilon = \frac{\sigma}{E}$$

ϵ = Strain ($\mu\epsilon$)

E = Youngs Modulus ($\approx 10^{7}$ for aluminum)

$$\epsilon = \frac{\sigma}{E} = \frac{3330}{10^{7}} = 3330 \times 10^{-7} \times 10^{6} \text{ } (\mu\epsilon) = 333 \ \mu\epsilon$$

Step IV

Determine the bridge configuration.

The available area that could be strain-gaged is quite large, therefore, a variety of gage types could be applied to the beam. In this example, BLH Electronics Type A7 gages were used, mainly because of availability.

The particular batch used had a resistance of 120.5Ω ± .3Ω and a gage factor of 1.97 ±2%. The Type A7 gage has a grid length of 1/4".

Two gages are placed at positions A and B in Figure 7-3.

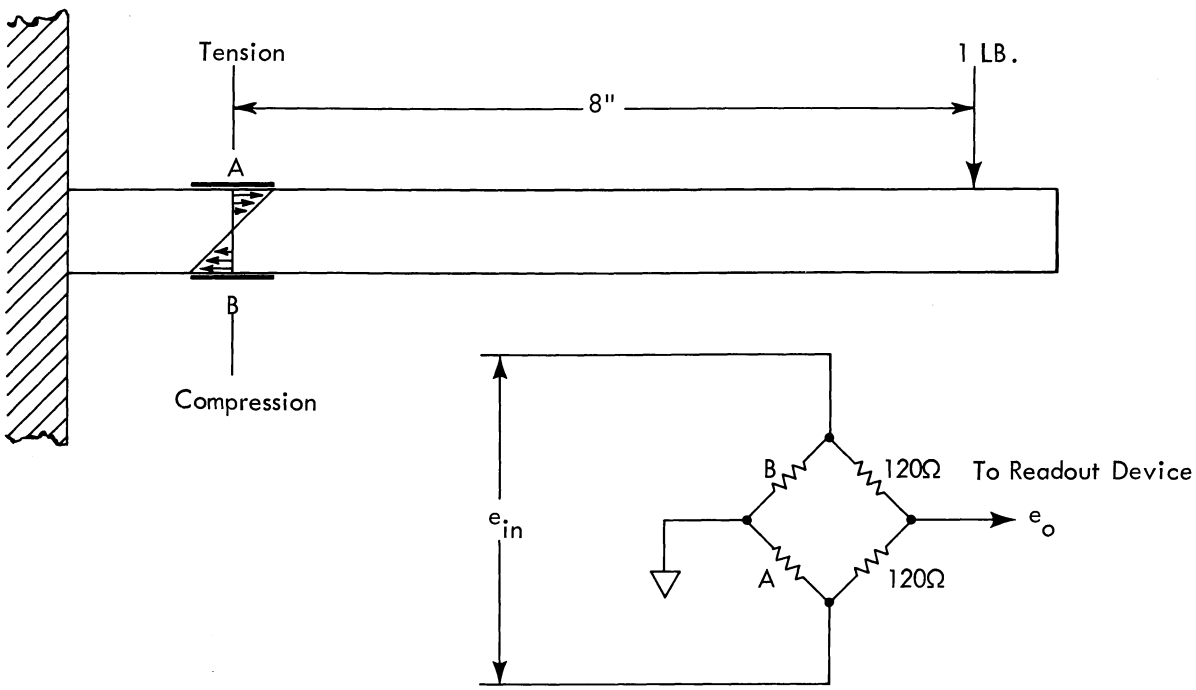

Figure 7-3

When the beam is stressed in the direction shown, gage A will be under tension and gage B will be under compession. The strain will be additive when the gages are wired into adjacent arms of the bridge.

Therefore: 1 LB = 333 $\mu\epsilon$* x 2 = 666 $\mu\epsilon$

Two other desirable features result from this arrangement.

1. Apparent strain with temperature change will be cancelled out.

2. Longitudinal tensile/compressive strains are also cancelled out -- provided the applied stress is exactly on-axis.

* From Steps II and III, facing page.

Dynamic Range

If 1 lb = 666 $\mu\epsilon$, 1 ounce = $\frac{666}{16} \approx 42\,\mu\epsilon$. This output complies with the requirement for $\geq 10\ \mu\epsilon$ at 1 ounce.

2 lbs will equal 1332 $\mu\epsilon$ (total). This represents a surface (longitudinal) strain of 666 $\mu\epsilon$ (the strain sensed by one gage).

The grade of aluminum used has a yield point of 31,000 PSI. This equals a strain of 3100 $\mu\epsilon$.

$$\epsilon = \frac{\sigma}{E} = \frac{31{,}000}{10^7} = 3100\ \mu\epsilon$$

If the yield point is equal to 3100 $\mu\epsilon$, it can be assumed that a maximum surface strain of 666 $\mu\epsilon$ will be within the limits of proportionality of the material. See Section II, Figures 2-1 and 2-2.

Step V

Determining the readout system.

Two readout systems will be considered: the carrier amplifier system and the DC system.

The Carrier Amplifier System (Figure 7-4)

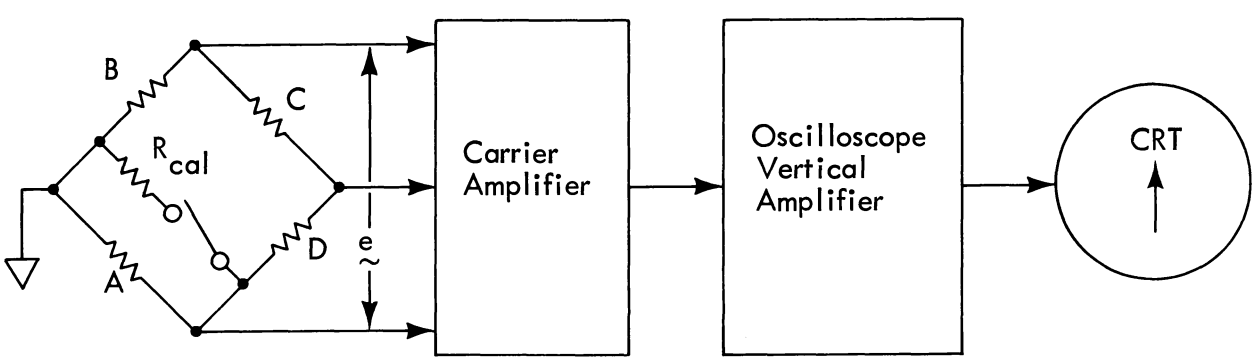

Increase in arm A resistance produces positive-going CRT deflection. Insertion of R_{cal} produces negative-going deflection (-strain).

Figure 7-4

Figure 7-4 shows the bridge arrangement in a typical carrier amplifier system.

Arms A and B are the active gages located on the cantilever beam. Arms C and D are 120Ω resistors located within the carrier amplifier.

An increase in gage A resistance will result in a positive CRT deflection.

Calibration - Physical:

System calibration can be effected by applying a known force to the transducer (at the load application point only) and adjusting the Carrier Amplifier gain to produce a convenient whole-number deflection on the CRT.

For example: 8 ounces equals a calculated strain of 333 $\mu\epsilon$. If the Carrier Amplifier gain is increased to make 333 $\mu\epsilon$ = 4 cm (at 100 $\mu\epsilon$/cm sensitivity), 1 cm will equal 2 ounces.

It will also be seen that 1 cm at the 10 $\mu\epsilon$/cm sensitivity position will equal 0.2 ounces.

Calibration - Simulated Load Resistor:

$$R_{cal} = \left(\frac{R_g}{GF\,(\epsilon_{total})}\right) - R_g$$

R_g = Nominal Gage Resistance

GF = Gage Factor

ϵ_{Total} = Desired Calibration Strain

R_{cal} = Calibration Resistor

For a simulated load of 8 ounces (333 $\mu\epsilon$).

$$R_{cal} = \left(\frac{120}{1.97 \times 333 \times 10^{-6}}\right) - 120 \approx 183\ K\Omega$$

If the calibration resistor is inserted in the position shown in Figure 7-4, the bridge will produce a simulated minus strain of 333 $\mu\epsilon$ = -8 ounces. Adjustment of the Carrier Amplifier gain to give some convenient whole-number CRT deflection completes the calibration.

The DC Amplifier System

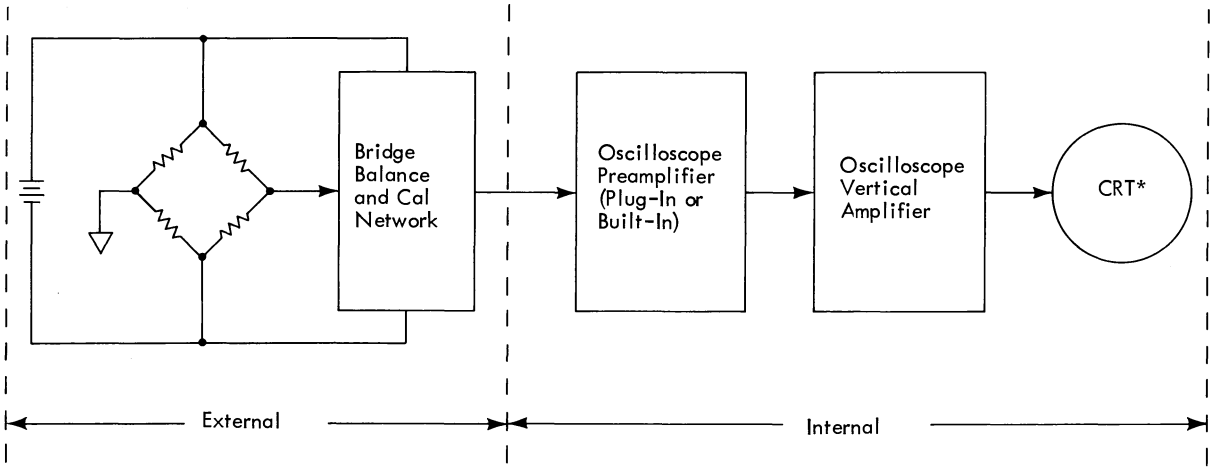

DC BRIDGE SYSTEM

*Cathode Ray Tube

Figure 7-5 shows a typical DC system.

Requirements:

Oscilloscope, or oscilloscope/plug-in combination with a maximum sensitivity of $\approx$100 μv/cm, DC coupled.

External bridge components, consisting of:

1. A DC supply (batteries).
2. Bridge balancing circuitry -- which includes:
   a. Any additional resistors to make up the four arm bridge.
   b. A variable null-balance resistor.
   c. A switchable calibration resistor.
   d. Suitable switching to give a zero reference (disconnection of bridge supply).

<u>The Bridge Supply:</u>

Two factors determine the voltage of the bridge supply.

1. The required sensitivity at the lowest force of interest.
2. The maximum permissable dissipation per gage.

Of the two factors, the maximum permissable gage dissipation will set the limit to the maximum obtainable sensitivity.

As a general guide, a <u>bonded</u> strain gage should not dissipate much more than 250 milliwatts of continuous power.

Assuming a bridge supply of 12 volts, the dissipation for a 120Ω bridge will be:

$$W = \frac{E^2}{R} = \frac{144}{120} = 1.2 \text{ watts}$$

Each 120Ω bridge arm will, therefore, dissipate: $\frac{1.2}{4} = 300$ milliwatts

This dissipation is a little on the high side, however, because 12v is easily obtained from two lantern batteries. It will be used in this example.

The formula for bridge output volts into a known load is:

$$E_o = \left(\frac{SVGn}{4\,(R + r)}\right) r$$

S = ϵ per gage

V = Bridge Volts

G = Gage Factor

n = Number of Active Gages

R = Nominal Gage Resistance

r = Load Resistance

As the standard oscilloscope input resistance is 1 megohm, the previous formula can be simplified to give a very close approximation:

$$E_o = \frac{SVGn}{4} \quad \text{or } E_o = \frac{S^*_{total}\,VG}{4}$$

In Step IV, Page 7-6, it was determined that 1 ounce = 42 $\mu\epsilon$.

Inserting 42 $\mu\epsilon$ in the simplified formula:

$$E_o = \frac{S_{total}\,VG}{4} = \frac{42 \times 10^{-6} \times 12 \times 1.97}{4} \approx 250\ \mu\text{volts}$$

<u>Calibration:</u>

Referring to the design considerations on Page 7-2, it will be seen that the $\geq$100 μvolt at 1 ounce requirement has been met.

System calibration can follow the procedure described for the Carrier Amplifier system.

1. Direct calibration by the application of a known load.
2. By insertion of a "simulated load" calibration resistor.

*S_{total} = total desired calibration strain (ϵ).

The calibration resistor is calculated in the same manner as shown on Page 7-7.

$$R_{cal} = \left(\frac{R_g}{GF\ (\epsilon_{total})} \right) - R_g$$

In both cases, the SENSITIVITY of the system is adjusted to produce a convenient whole-number deflection on the CRT -- either by adjusting the oscilloscope VARIABLE GAIN, and/or by adjusting the BRIDGE VOLTS.

Figure 7-6 shows a practical circuit incorporating a bridge balancing network, a "sensitivity" potentiometer, a "zero reference" pushbutton, and a pushbutton selected "calibration" resistor.

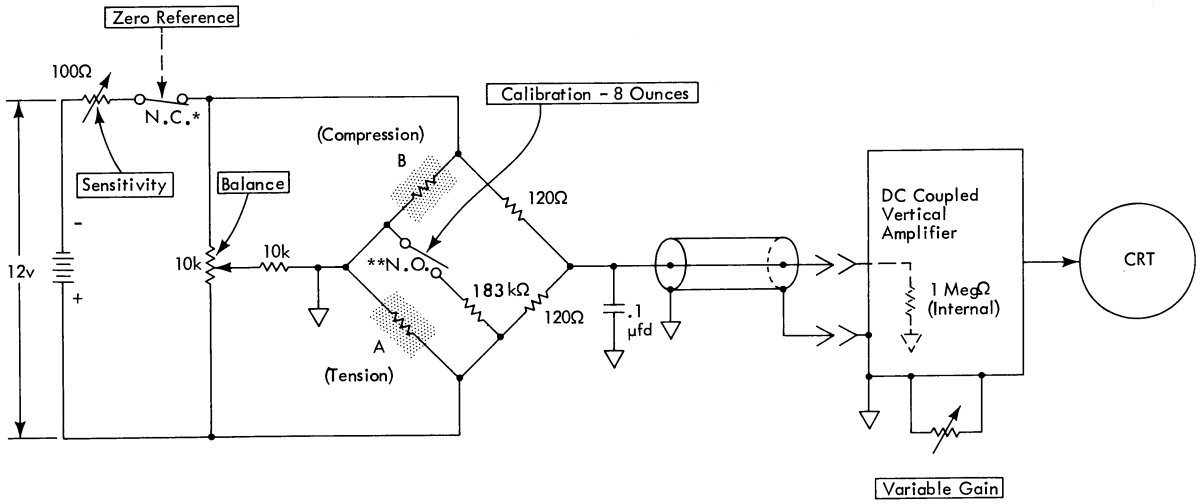

* NC = Normally Closed
** NO= Normally Opened

Cantilever Beam Force Transducer - Circuit Diagram

Figure 7-6

Noise Rejection

The circuit also includes a high frequency roll-off capacitor. This capacitor, in conjunction with the bridge impedance, forms a low-pass filter.

$$f_{co} = \frac{1}{2\pi RC} \qquad F_{co} = 3 \text{ db down point}$$

With a bridge impedance of 120Ω and a capacitor of .1 μfd, the cut off frequency will be:

$$f_{co} = \frac{1}{6.28 \times 120 \times 10^{-7}} = 13.4 \text{ kHz}$$

This filter attenuates RF interference and noise outside the frequency of interest.

Note that the power supply polarity is connected to give a positive-going output when gage A is under tension, in keeping with the previous examples.

Test Results:

The purpose of the test was to determine the validity of the various calculations.

Both the transducer-carrier amplifier system and the transducer-DC amplifier system produced results well within ±5% of the calculated values. Closer examination was inhibited by the lack of accuracy and readability of the spring scale used in the test.

SECTION VIII

MEASUREMENT OF TORSIONAL STRAIN

Torque is a measure of the force applied to an object in an attempt to turn it. The resultant twisting force may or may not produce rotation of the object under torsion.

Torque is the product of a force (F) acting through a moment arm (L) to the point of rotation. In the following examples, torque is expressed in inch-pounds or foot-pounds, as opposed to pound-feet terminology (Ref., Materials and Processes, Young, Page 58).

Torque (inch-pounds) = FL

F = Force (LBS)

L = Length of Moment Arm (inches)

Figure 8-1 illustrates the application of a torque of 12 inch-pounds (1 foot pound) to a shaft. It will be seen that many combinations of F and L can produce a given torque.

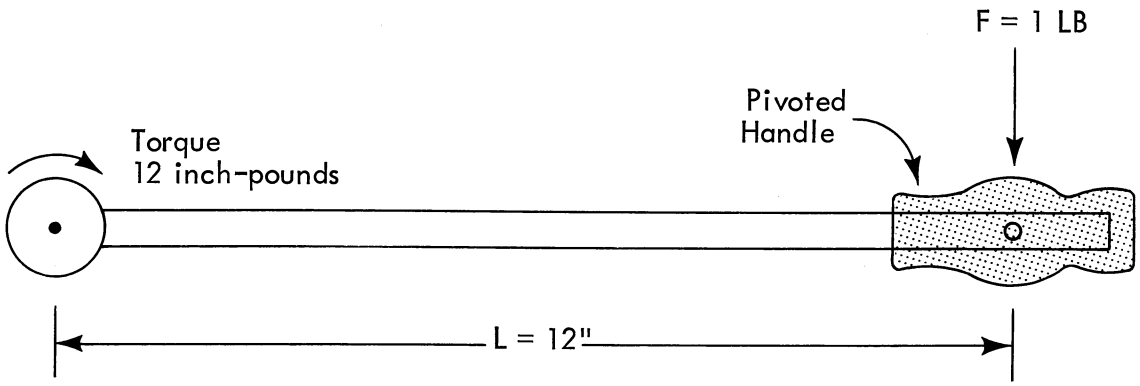

Figure 8-1

Figure 8-2 illustrates the application of a torque to a shaft by means of a pully (or gear).

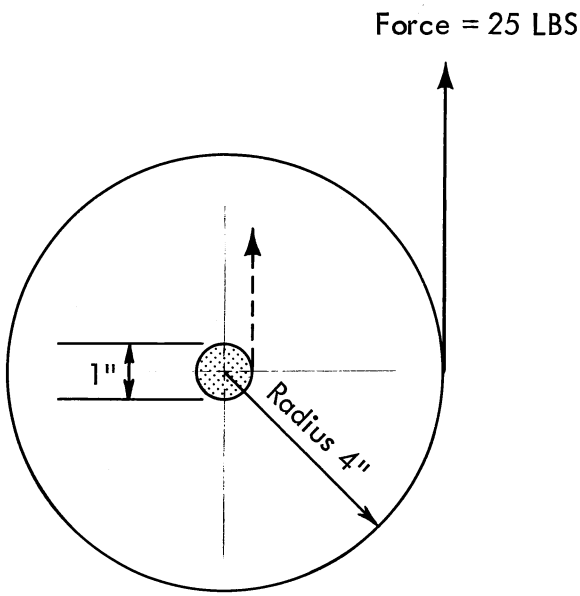

Figure 8-2

$T = FL = 25 \times 4 = 100$ inch-pounds

However, if the same force is applied at right-angles directly at the shaft radius (dashed arrow), the resultant torque will be:

$T = FL = 25 \times .5 = 12.5$ inch-pounds.

The applied torque can be measured in two basic ways:

1. By measuring the dimensional change occurring in the moment arm applying the torque.

   The dimensional change can be measured mechanically by noting the deflection of the beam. Most mechanical torque wrenches operate in this manner. If electrical readout is desired, the beam can be strain-gaged to measure bending strain as described in Section VII. It will be seen that torque is measured indirectly by utilizing the bending moment.

2. By measuring the torsional strain at the surface of the rotating member, or on a shaft extension of the rotating member.

   Torque measurements are made on the actual shaft, or on an extension of the shaft transmitting the torque. This method has certain advantages, and certain disadvantages over the strain-gaged moment arm.

Disadvantages:

The strain-gaged torque rod is generally less sensitive than the moment arm because of the difference in Section Modulus ----- for a given cross-section of material. The moment arm can produce greater sensitivity.

The bonding of gages to a rod is usually more difficult, and the alignment of the gages is more critical.

The torque-strain relationships are more involved than the bending strain relationships.

Advantages:

The strain-gaged torque rod lends itself to the measurement of torque under dynamic conditions. Rotating members can be strain-gaged and connections made via slip rings.

For this method to be practical, a complete four arm bridge should be wired on the shaft. This arrangement removes the slip ring contact resistance from the bridge proper (see Figure 8-3).

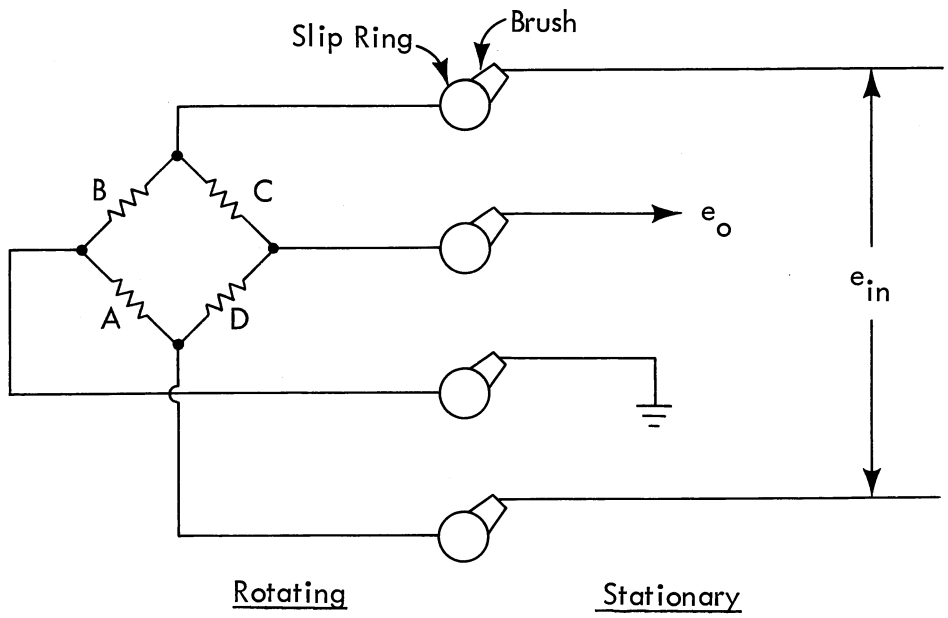

Slip ring connections to a rotating bridge.

Figure 8-3

If e_{in} is from a relatively high impedance (constant current) source, and e_o operates into a relatively high impedance load, the effect of slip ring contact resistance will be negligible.

A Strain Gage Torque Transducer

A simple torque transducer will be described in order to illustrate the conversion steps involved between the quantity being measured (torque) and the eventual readout.

Principle Stress in a Shaft Transmitting Torque

When a shaft is twisted, the principle stress exists at 45° to the center-line of the shaft. Furthermore, equal and opposite stresses exist at 90° to each other.

Figure 8-4 shows the stress pattern in a shaft under torsion, and the location of two gages to sense the equal and opposite strains.

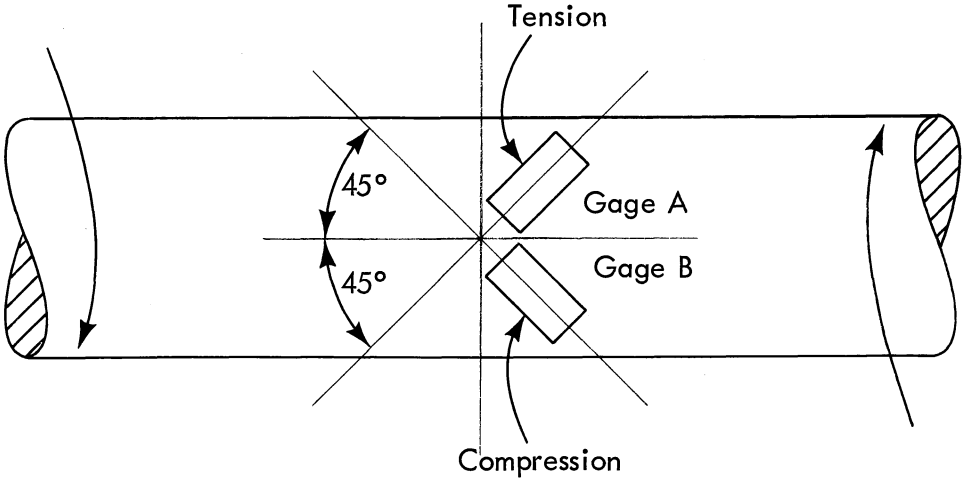

Figure 8-4

Example:

Quantity to be Measured	Torque (foot-pounds)
Range	1 Foot-Pound to 100 Foot-Pounds
Static or Dynamic	Short-Term Static
Bridge Sensitivity	>10 $\mu\epsilon$ at 1 Foot-Pound
Transducer Body	Standard 1/2" Drive Socket Wrench Extension, 5" Long, Steel, .525" Diameter

Figure 8-5 shows the finished transducer.

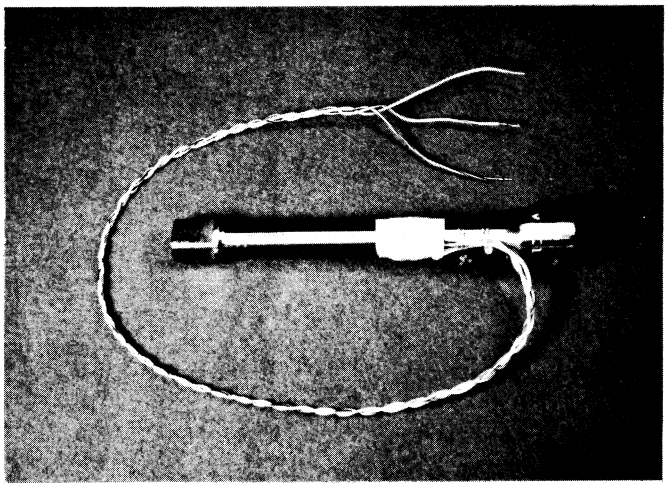

Figure 8-5

Step 1:

Find the principle stress for a torque of 1 foot-pound (12 inches-pounds):

* Principle Stress (σ) $= \dfrac{16T}{\pi D^3}$

σ = Principle Stress (PSI)

T = Torque (inch-pounds)

D = Diameter (inches)

$$\sigma = \frac{16T}{\pi D^3} = \frac{192}{4.53 \times 10^{-1}} = 424 \text{ PSI}$$

*From "Simplified Mechanics and Strength of Materials", Harry Parker (John Wiley and Sons).

Step 2:

Find the principle strain.

Principle Strain (ϵ) $= \frac{4\sigma}{3E}$ E = Youngs Modulus ($\approx 3 \times 10^7$ for steel)

$$\epsilon = \frac{4\sigma}{3E} = \frac{1696}{9 \times 10^7} = 18.8\ \mu\epsilon$$

Step 3:

Determine the bridge configuration.

Good design practice indicates the use of four gages for this type of measurement. Here are the reasons.

A single gage would produce minimum output. It would be sensitive to bending and tensile-compressive strains; also a single gage would not be compensated for temperature changes (unless a special temperature compensated type were used).

Two gages would produce twice the output; would be mutually temperature compensating; and would afford partial cancellation of bending and tensile-compressive strains; however, the sensitivity to bending strains would vary with the direction of the applied side pressure.

A four gage arrangement, properly aligned and installed, will give good rejection to side thrust (bending) and end thrust (longitudinal strain).

A four arm arrangement will also provide mutual temperature compensation, at the same time producing four times the output of a single gage*.

*Ref: The Strain Gage Primer; C.C. Perry and H.R. Lissmen, McGraw-Hill, Inc.

The major purpose in constructing this transducer, and the other two transducers described in Sections V and VII, was to illustrate the principles involved. In the case of the torque transducer, only two gages were used, for the following reasons:

1. The small (1/2") diameter of the shaft, and the size of the available gages limited the gage installation to two.

2. The basic principles of operation are unaffected by the number of gages.

Figure 8-8 shows the physical and electrical location of the two BLH Electronics Type A8 gages. These particular gages have a grid length of 1/8", a nominal resistance of 120Ω and a gage factor of 1.89 ±2%.

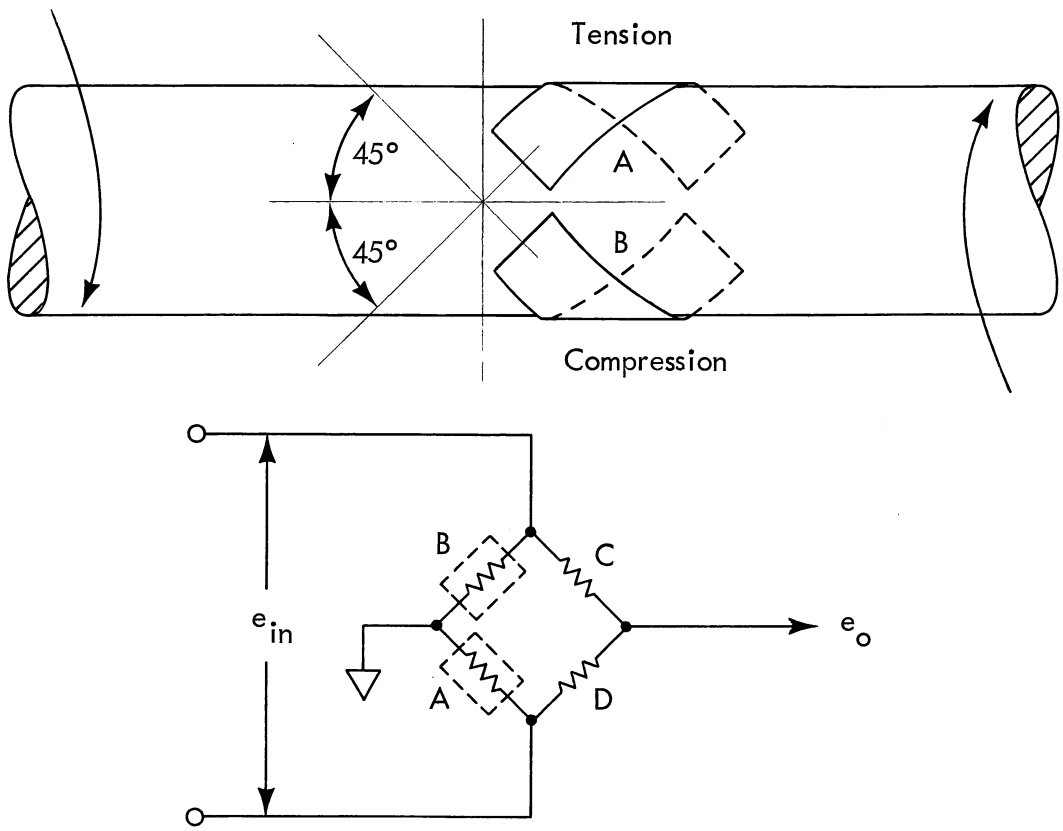

Figure 8-6

It will be seen that the equal and opposite principle strains will be additive when the gages are placed in positions A and B of the bridge (refer to page 8-5).

From Steps 1 and 2 it was determined that a torque of 12 inch-pounds would produce a calculated output, per gage, of 18.8 $\mu\epsilon$, therefore, the bridge should produce a calculated output of 37.6 $\mu\epsilon$ for a torque of 12 inch-pounds. This output complies with the sensitivity requirement for $\geq$10 $\mu\epsilon$ at 1 foot-pound (12 inch-pounds).

Dynamic Range

1 to 100 foot-pounds.

If 1 foot-pound equals a principle strain of 18.8 $\mu\epsilon$, 100 foot-pounds should equal 1880 $\mu\epsilon$.

Assuming the alloy steel of the transducer body has a yield strength of 150,000 PSI, the principle strain at the yield strength point will be:

$$\epsilon = \frac{\sigma}{E} = \frac{15 \times 10^4}{3 \times 10^7} = 5000\ \mu\epsilon$$

With a yield strength of 150,000 PSI (5000 $\mu\epsilon$), it can be assumed that the transducer will be working within the proportional limit at 100 foot-pounds (1880 $\mu\epsilon$).

Readout Systems

It can be shown that the bridge output at the lowest torque of interest is compatible with either the Carrier Amplifier System or the DC Amplifier System. It has already been determined that the bridge output in $\mu\epsilon$ meets the minimum requirements for carrier amplifier systems ($\geq$10 $\mu\epsilon$).

The DC Amplifier System

It will be remembered that the bridge output in volts can be determined from the following approximate formula (Section VII, Page 7-10).

$$E_o = \frac{S_{total}\ VG}{4}$$

S_{total} = Total $\mu\epsilon$

V = Bridge Supply Voltage

G = Gage Factor

Therefore, assuming a bridge supply of 12v and a torque of 12 inch-pounds (37.6 $\mu\epsilon$):

$$E_o = \frac{37.6 \times 10^{-6} \times 12 \times 1.89}{4} = 212\ \mu\text{volts}$$

A DC coupled oscilloscope with a maximum sensitivity of 200 μvolts/cm would be suitable as a readout device.

Calibration

Calibration can follow the lines suggested in Sections V and VII.

Briefly, the methods are:

1. Apply a known load and adjust the system gain to indicate some whole-number deflection on the CRT. The deflection should be calibrated in terms of the parameter being measured.

2. Insert a "simulated load" calibration resistor in the bridge network (see Sections V and VII).

Simulated Load Resistor

$$R_{cal} = \left(\frac{R_g}{GF\ (\epsilon_{total})}\right) - R_g$$

R_g = Nominal Gage Resistance

GF = Gage Factor

ϵ_{total} = Desired Calibration Strain

R_{cal} = Calibration Resistor

For example, the R_{cal} for a simulated load of 25 foot-pounds would be:

$$R_{cal} = \frac{120}{1.89 \times 940 \times 10^{-6}} \quad -120 = 67.48\ K\Omega$$

If possible, methods one and two should be combined.

Test Results

The purpose of the test was to determine the validity of the various calculations.

The torque transducer output was well within ±10% of the calculated values. Closer examination was inhibited by the readout resolution of the automotive torque wrench used to apply the torque.

NOTES

APPENDIX

Commercial Strain Gage Transducers -- Interpreting the published sensitivity ratings.

Manufacturers of transducers employing the strain gage as a sensing element customarily quote the sensitivity in millivolts; either millivolts per volt excitation (mv/v), or simply millivolts output at the rated excitation voltage.

In both cases this voltage relates to the full-scale input parameter, an extract from a manufacturers specification sheet is given below to illustrate this point.

Quantity = Pressure

Range = 0-500 P.S.I.

Rated Electrical Excitation = 10v DC or AC R.M.S.

Sensitivity = 40 mv (+20% - 10%) open circuit at rated excitation.

The above listed transducer will produce 40 mvolts (+20% - 10%) into an open circuit at an input pressure of 500 P.S.I. and with an excitation voltage of 10v DC or AC R.M.S.

DC Readout

It will be seen from the preceding information that any voltage measurement can be easily related to the input quantity, within the stated tolerance. System calibration will yield results limited only by the overall system linearity and resolution of the readout device. System frequency response may also enter into the consideration (see Section VI).

Readout in Micro-Strain ($\mu\epsilon$)

As the transducer sensitivity in millivolts is stated within +20% - 10% before final calibration, it follows that any conversion to $\mu\epsilon$ from this information will also be +20% - 10%, however, this information is adequate for initial system set-up.

The formula for bridge output into a high impedance load is:

$$E_o = \frac{S_{total}\ VG}{4}$$

E_o = Bridge Output

V = Bridge Volts

G = Gage Factor

S_{total} = Total Strain

Transposing the above formula:

$$S_{total} = \left(\frac{E_o}{VG}\right) 4$$

Taking the 0-500 P.S.I. commercial transducer as an example, its output in $\mu\epsilon$ will be:

$$S_{total} \text{ (at 500 P.S.I.)} = \left(\frac{40 \times 10^{-3}}{10 \times 2^*}\right) 4 = 8{,}000\ \mu\epsilon\ (+\ 20\% - 10\%)$$

Care should be exercised in interpreting the manufacturers specifications in terms of microstrain. The preceding method assumes the use of standard resistance strain gages with a nominal gage factor of 2.

Semiconductor gages have a very high gage factor in relation to the resistance strain gage. This data would have to be known in order to provide meaningful information.

* Assuming a nominal gage factor of 2.

PREFACE

This article is concerned with the bonded resistance strain gage as a precision measuring tool.

In order to measure, any measurement tool must form a system which consists of a sampling point and a calibrated readout point. A simple example of this concept exists in the spring balance -- there is a load application point and a calibrated readout point.

In practice, however, most measuring systems involve several conversion steps between the quantity being measured and the eventual readout. The strain gage is no exception. The following sections are, therefore, concerned with the concept of the bonded resistance strain gage as part of a measurement system.

Readout:

Calibrated readout can be in a single dimension in a simple case (example: readout from a meter dial) or readout can be calibrated in two dimensions -- the quantity being observed versus time (example: an oscilloscope display).

Whenever the quantity being observed changes too rapidly to be hand plotted, we can assume we have entered the realm of dynamic measurements.

Dynamic Measurements:

There are several ways of observing and recording dynamic measurements. For example: The moving film multi-channel oscillograph; the chart recorder; or the cathode ray oscilloscope with or without storage facilities.

The cathode ray oscilloscope is used as an example of a readout device in the following sections because of its wide range of application in terms of frequency response, dynamic range, instant readout and general ease of operation. If the oscilloscope has storage facilities, transient phenomena can be stored on the face of the cathode ray tube. In all cases, oscilloscope cameras can be used to make permanent photographic records when required.

Dynamic measurements are simplified if the following conditions exist:

1. System frequency response should extend from zero to some upper limit well above the highest expected strain frequency (see Frequency Response, Section VI).

2. The measurement system should be linear throughout the range of interest (see Sections II, V, VII and VIII).

If these conditions exist, static calibration will usually result in accurate dynamic readout. This is the concept upon which all the following examples and calculations are based.

Linearity:

The bonded resistance strain gage functions as a precision measuring tool because of two inherently linear relationships.

1. The linear relationship between stress and strain within the proportional limits of the strained member (Hookes law of proportionality - see Section II).

2. The linear relationship between the dimensional change (strain) in the strain gage grid and the resultant change in resistance.

A third factor affecting linearity involves the theory of the unbalanced bridge (used in most cases where dynamic measurements are involved).

It can be shown that bridge unbalance, within the order of magnitude encountered in strain gage measurements, contributes insignificant non-linearities to the system. (Ref: "The Strain Gage Primer", Perry and Lissner, Page 50-51.)

The readout device itself might contribute a small amount of non-linearity (refer to manufacturers specifications), however, the total non-linearity of a properly designed system is usually of minor significance.

The major objective of this article is to describe and illustrate the various concepts involved in progressing from the quantity being measured to the eventual readout.

In general, the discussion will be confined to the strain gage as a measurement tool. This includes the basic measurement of strain, as well as transducer concepts.

For further study, the reader is referred to published texts on the subject, some of which are referenced throughtout the following sections.

NOTES

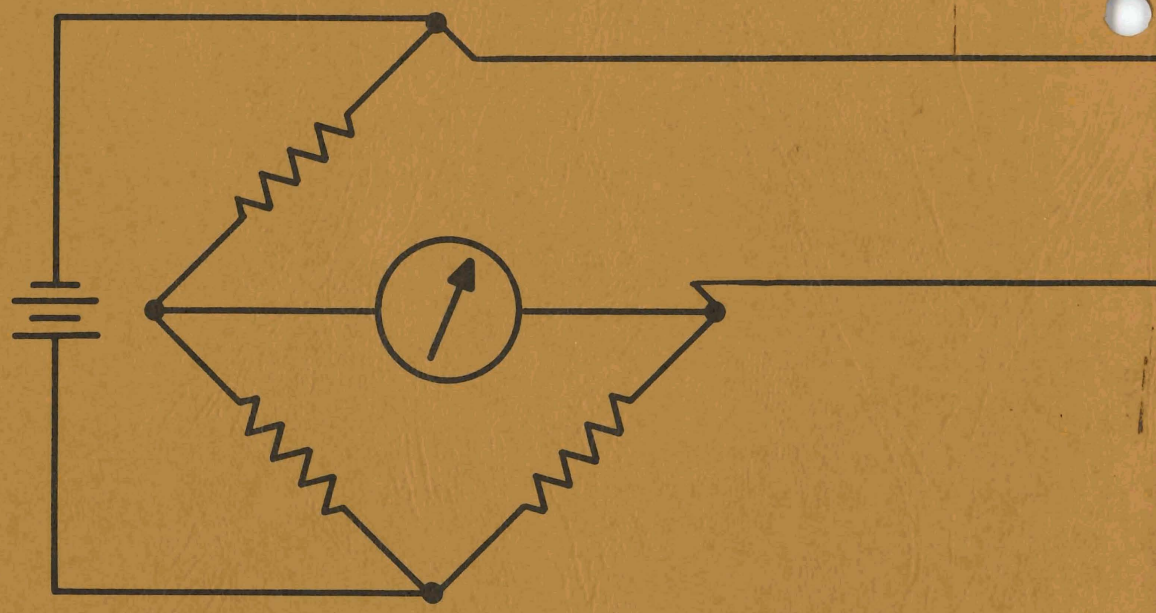

(863)