Tektronix®

COMMITTED TO EXCELLENCE

WARNING

THE FOLLOWING SERVICING INSTRUCTIONS ARE FOR USE BY QUALIFIED PERSONNEL ONLY. TO AVOID PERSONAL INJURY, DO NOT PERFORM ANY SERVICING OTHER THAN THAT CONTAINED IN OPERATING INSTRUCTIONS UNLESS YOU ARE QUALIFIED TO DO SO. REFER TO THE OPERATORS SAFETY SUMMARY AND THE SERVICE SAFETY SUMMARY PRIOR TO PERFORMING ANY SERVICE.

PLEASE CHECK FOR CHANGE INFORMATION AT THE REAR OF THIS MANUAL.

2236 OSCILLOSCOPE

SERVICE

INSTRUCTION MANUAL

Tektronix, Inc.
P.O. Box 500
Beaverton, Oregon 97077

070-4204-00
Product Group 46

Serial Number _____

First Printing MAR 1983
Revised NOV 1986

Copyright © 1983 Tektronix, Inc. All rights reserved. Contents of this publication may not be reproduced in any form without the written permission of Tektronix, Inc.

Products of Tektronix, Inc. and its subsidiaries are covered by U.S. and foreign patents and/or pending patents.

TEKTRONIX, TEK, SCOPE-MOBILE, and are registered trademarks of Tektronix, Inc. TELEQUIPMENT is a registered trademark of Tektronix U.K. Limited.

Printed in U.S.A. Specification and price change privileges are reserved.

INSTRUMENT SERIAL NUMBERS

Each instrument has a serial number on a panel insert, tag, or stamped on the chassis. The first number or letter designates the country of manufacture. The last five digits of the serial number are assigned sequentially and are unique to each instrument. Those manufactured in the United States have six unique digits. The country of manufacture is identified as follows:

B000000	Tektronix, Inc., Beaverton, Oregon, USA
100000	Tektronix Guernsey, Ltd., Channel Islands
200000	Tektronix United Kingdom, Ltd., London
300000	Sony/Tektronix, Japan
700000	Tektronix Holland, NV, Heerenveen, The Netherlands

TABLE OF CONTENTS

		Page
LIST OF ILLUSTRATIONS		iv
LIST OF TABLES		v
OPERATORS SAFETY SUMMMARY		vi
SERVICING SAFETY SUMMARY		vii
SECTION 1	SPECIFICATION	
	INTRODUCTION	1-1
	ACCESSORIES	1-1
	PERFORMANCE CONDITIONS	1-1
SECTION 2	OPERATING INSTRUCTIONS	
	PREPARATION FOR USE	2-1
	SAFETY	2-1
	LINE VOLTAGE	2-1
	POWER CORD	2-1
	LINE FUSE	2-1
	INSTRUMENT COOLING	2-2
	CONTROLS, CONNECTORS, AND INDICATORS	2-2
	DISPLAY, POWER, AND PROBE ADJUST	2-2
	VERTICAL	2-3
	HORIZONTAL	2-4
	TRIGGER	2-6
	COUNTER, TIMER, AND MULTIMETER	2-8
	RIGHT SIDE PANEL	2-9
	REAR PANEL	2-9
	OPERATING CONSIDERATIONS	2-11
	GRATICULE	2-11
	GROUNDING	2-11
	SIGNAL CONNECTIONS	2-11
	INPUT COUPLING CAPACITOR PRECHARGING	2-11
	POWER-UP CHECKS	2-12
	CTM MEASUREMENT CONSIDERATIONS	2-12
	STATUS AND ERRORS MESSAGES	2-12
	OPERATOR'S ADJUSTMENTS	2-14
	INTRODUCTION	2-14
	BASELINE TRACE	2-14
	TRACE ROTATION	2-14
	PROBE COMPENSATION	2-15
SECTION 3	THEORY OF OPERATION	
	INTRODUCTION	3-1
	SECTION ORGANIZATION	3-1
	INTEGRATED CIRCUIT DESCRIPTIONS	3-1
	GENERAL DESCRIPTION	3-2
	OSCILLOSCOPE	3-2
	CTM	3-3
	DETAILED CIRCUIT DESCRIPTION	3-4
	OSCILLOSCOPE	3-4
	VERTICAL ATTENUATORS	3-4
	Input Coupling	3-4
	Buffer Amplifier and Gain Switching Network	3-5
	Paraphase Amplifier	3-5
	VERTICAL PREAMPLIFIERS	3-5
	CHANNEL SWITCH AND VERTICAL OUTPUT	3-6
	Delay Line Driver	3-7
	Vertical Output Amplifier	3-7
	A/B Sweep Separation Circuit	3-8
	TRIGGER AMPLIFIERS AND SWITCHING	3-8
	Internal Trigger Amplifier	3-9
	A External Trigger Amplifier	3-9
	Line Trigger Amplifier	3-9
	A TRIGGER GENERATOR	3-9
	A Trigger Level Circuit	3-9
	A Trigger Level Comparator	3-10
	A Schmitt Trigger and TV Trigger Circuit	3-10
	A SWEEP GENERATOR AND LOGIC	3-10
	A Miller Sweep Generator	3-11
	A Sweep Logic	3-11
	ALTERNATE B SWEEP	3-12
	B Miller Sweep Generator	3-12
	B Trigger Level Comparator	3-13
	Runs After Delay	3-13
	B Delay Time Position Comparator	3-13
	B Sweep Logic	3-13
	Alternate Display Switching Logic	3-14
	B Z-Axis Logic	3-14

TABLE OF CONTENTS (cont)

		Page
SECTION 3	THEORY OF OPERATION (cont)	
	HORIZONTAL	3-14
	Horizontal Preamplifier	3-14
	X-Y Amplifier	3-15
	Horizontal Output Amplifier	3-15
	Z-AXIS AMPLIFIER	3-16
	Dc Restorer	3-17
	POWER SUPPLY AND PROBE ADJUST	3-18
	Power Input	3-18
	Preregulator	3-18
	Inverter	3-19
	Crt Supply	3-19
	Focus Circuit	3-19
	Low-Voltage Supplies and Fan	3-19
	Probe Adjust	3-20
	CTM	3-20
	CPU SYSTEM	3-20
	Microprocessor Reset	3-20
	CPU Clock and Interrupt Timing	3-20
	Address Decoding Logic	3-20
	ROM	3-20
	Buffered Data Bus Latch	3-21
	Counter Data Bus Switch	3-21
	DISPLAY SYSTEM	
	Display Multiplexing	3-21
	Display and Filament Driver	3-21
	INPUT/OUTPUT PORTS	
	Sample Counter Read Ports	3-21
	Time Counter Read Ports	3-22
	Pushbutton Read Port	3-22
	Oscilloscope Read Port and Probe Decoder	3-22
	Counter Control Latch	3-22
	DMM Control Latch	3-22
	Audio Transducer	3-22
	COUNTER SYSTEM	3-22
	Input Multiplexer	3-22
	Synchronizer	3-23
	Oscillators	3-27
	Phase-Locked Loop	3-27
	Sample and Time Counter Chains	3-27

		Page
SECTION 3	THEORY OF OPERATION (cont)	
	SCOPE SWEEP SYSTEM INTERFACE	3-28
	Delay/Delta Time Controller-Digital Section	3-28
	Delay/Delta Time Controller-Analog Section	3-29
	Intensified Zone Controller	3-29
	DMM	3-29
	Input Switching Network	3-32
	Input Filter	3-33
	Input Buffer	3-33
	Rms Converter	3-34
	Ac Compensation	3-34
	Multiplexer and Voltage Reference	3-34
	V/F Converter	3-34
	Ohms Reference	3-35
	Overload Protection	3-36
	Serial Interface	3-36
	Relay Drive	3-36
	DMM Power Supply	3-37
SECTION 4	PERFORMANCE CHECK PROCEDURE	
	INTRODUCTION	4-1
	PURPOSE	4-1
	STRUCTURE	4-1
	TEST EQUIPMENT	4-1
	LIMITS AND TOLERANCES	4-1
	PREPARATION FOR CHECKS	4-2
	INDEX TO PERFORMANCE CHECK STEPS	4-4
	VERTICAL	4-5
	HORIZONTAL	4-9
	TRIGGER	4-12
	CTM	4-15

TABLE OF CONTENTS (cont)

		Page
SECTION 5	ADJUSTMENT PROCEDURE	
	INTRODUCTION	5-1
	PURPOSE	5-1
	STRUCTURE	5-1
	TEST EQUIPMENT	5-1
	LIMITS AND TOLERANCES	5-1
	ADJUSTMENT INTERACTION	5-1
	PREPARATION FOR ADJUSTMENT	5-1
	INDEX TO ADJUSTMENT PROCEDURE STEPS	5-3
	POWER SUPPLY AND CRT DISPLAY	5-4
	VERTICAL	5-6
	HORIZONTAL	5-15
	TRIGGER	5-20
	CTM	5-24
SECTION 6	MAINTENANCE	
	STATIC-SENSITIVE COMPONENTS	6-1
	PREVENTIVE MAINTENANCE	6-2
	INTRODUCTION	6-2
	GENERAL CARE	6-2
	INSPECTION AND CLEANING	6-2
	LUBRICATION	6-5
	SEMICONDUCTOR CHECKS	6-5
	PERIODIC READJUSTMENT	6-5
	TROUBLESHOOTING	6-5
	INTRODUCTION	6-5
	TROUBLESHOOTING AIDS	6-5
	TROUBLESHOOTING EQUIPMENT	6-7
	TROUBLESHOOTING TECHNIQUES	6-7
	CTM TROUBLESHOOTING PROCEDURE	6-10
	CORRECTIVE MAINTENANCE	6-22
	INTRODUCTION	6-22
	MAINTENANCE PRECAUTIONS	6-22
SECTION 6	MAINTENANCE (cont)	
	OBTAINING REPLACEMENT PARTS	6-22
	MAINTENANCE AIDS	6-22
	INTERCONNECTIONS	6-22
	TRANSISTORS AND INTEGRATED CIRCUITS	6-24
	SOLDERING TECHNIQUES	6-24
	REMOVAL AND REPLACEMENT INSTRUCTIONS	6-25
	Cabinet	6-25
	CTM Circuit Board	6-25
	Display Circuit Board	6-27
	Cathode-Ray Tube	6-28
	Power-Supply Shield	6-29
	Filter Circuit Board	6-29
	Alt Sweep Circuit Board	6-29
	Attenuator and Logic Switch Circuit Board	6-30
	Timing Circuit Board	6-31
	Bottom Shield, Attenuator and Timing Circuit-Board Module	6-32
	Front-Panel Circuit Board	6-32
	Main Circuit Board	6-34
	REPACKAGING FOR SHIPMENT	6-35
	SELECTABLE COMPONENTS	6-36
SECTION 7	OPTIONS	
SECTION 8	REPLACEABLE ELECTRICAL PARTS	
SECTION 9	DIAGRAMS	
SECTION 10	REPLACEABLE MECHANICAL PARTS	
ACCESSORIES		
CHANGE INFORMATION		

LIST OF ILLUSTRATIONS

Figure		Page
1-1	Maximum input voltage vs frequency derating curve for CH 1 OR X & DMM, CH 2 OR Y,and EXT INPUT connectors	1-17
1-2	Physical dimensions of the 2236 Oscilloscope	1-18
2-1	Optional power cords	2-1
2-2	Fuse holder and power cord connector	2-2
2-3	Power and display controls and indicators and PROBE ADJUST output	2-3
2-4	Vertical controls and connectors	2-3
2-5	Horizontal controls	2-5
2-6	Trigger controls, connector, and indicator	2-6
2-7	Counter, timer, and multimeter controls and indicator	2-8
2-8	Multimeter right side panel connectors	2-10
2-9	Rear panel connector	2-10
2-10	Graticule measurement markings	2-11
2-11	Probe compensation	2-15
3-1	Block diagram of the Vertical Attenuators	3-4
3-2	Block diagram of the Channel Switching circuitry	3-6
3-3	Block diagram of the A Sweep Generator and Logic circuitry	3-11
3-4	Block diagram of the Horizontal Amplifier	3-15
3-5	Simplified diagram of the Dc Restorer circuitry	3-17
3-6	Simplified diagram of the Period measurement circuitry	3-23
3-7	Typical waveforms for the Nongated Period function	3-24
3-8	Typical waveforms for the Gated Period function	3-25
3-9	Simplified diagram of the Width measurement circuitry	3-25
3-10	Typical waveforms for the Width function	3-26
3-11	Typical waveforms for the Delay function with $\overline{\text{Valt}}$ HI	3-29
3-12	Typical waveforms for the Delay function with $\overline{\text{Valt}}$ LO	3-30
3-13	Typical waveforms for the Delta Time function with $\overline{\text{Valt}}$ HI	3-31
3-14	Typical waveforms for the Delta Time function with $\overline{\text{Valt}}$ LO	3-32
4-1	Test setup for DMM common mode check	4-21
6-1	Multi-connector holder orientation	6-7
6-2	Period measurement loop test waveforms	6-19
6-3	Width measurement loop test waveforms	6-20
6-4	DMM serial interface loops test waveforms	6-21
9-1	Color codes for resistors and capacitors	
9-2	Semiconductor lead configurations	
9-3	Locating components on schematic diagrams and circuit board illustrations	
9-4	Oscilloscope basic block diagram	
9-5	Oscilloscope detailed block diagram	
9-6	CTM basic block diagram	
9-7	CTM detailed block diagram	
9-8	Circuit board location illustration	
9-9	A2-Attenuator board	
9-10	A15-Logic Switch board	
9-11	A1-Main board	
9-12	Circuit view of A1-Main board	
9-13	A3-Front Panel board	
9-14	Circuit view of A3-Front Panel board	
9-15	A4-Timing board	
9-16	A5-Altn Sweep logic board	
9-17	A6-Filter board	
9-18	A12-Multimeter Control board	
9-19	A10-Counter/Timer/Multimeter board	
9-20	A14-Hot Signal Switch board	
9-21	A13-Display board	
9-22	Partial A11-Counter/Timer/Multimeter board with Option 14	

LIST OF TABLES

Table		Page
1-1	Electrical Characteristics	1-2
1-2	Environmental Characteristics	1-16
1-3	Physical Characteristics	1-17
2-1	VERT MODE Trigger Source	2-7
2-2	Power-up Checks	2-12
2-3	Equipment Required for 10X Probe Compensation	2-16
4-1	Test Equipment Required	4-2
4-2	Deflection Accuracy Limits	4-5
4-3	Settings for Bandwidth Checks	4-7
4-4	Settings for Timing Accuracy Checks	4-10
4-5	Switch Combinations for A Triggering Checks	4-12
4-6	Dc Voltage Readout Checks	4-17
4-7	Ac Voltage Readout Checks	4-17
4-8	Dc CH 1 Readout Checks	4-18
4-9	Dc Probe Readout Checks	4-18
4-10	Ac.CH 1 Readout Checks	4-18
4-11	Ac Probe Readout Checks	4-18
4-12	Resistance Readout Checks	4-19
5-1	Adjustment Interactions	5-2
5-2	Power Supply Limits	5-4
5-3	Deflection Accuracy Limits	5-9
5-4	Settings for Bandwidth Checks	5-12
5-5	Settings for Timing Accuracy Checks	5-17
5-6	Switch Combinations for A Triggering Checks	5-22
5-7	Dc Voltage Readout Checks	5-27
5-8	Ac Voltage Readout Checks	5-27
5-9	Dc Probe Readout Checks	5-28
5-10	Ac Probe Readout Checks	5-29
5-11	Resistance Readout Checks	5-29
6-1	Relative Susceptibility to Static-Discharge Damage	6-1
6-2	External Inspection Checklist	6-3
6-3	Internal Inspection Checklist	6-3
6-4	Power Supply Limits and Ripple	6-8
6-5	Control Switches Verification Readout	6-12
6-6	Channel 1 Logic Verification	6-12
6-7	Test 1-ROM Check Test Messages	6-13
6-8	Test 2-Counter Error Messages	6-14
6-9	Test 3-DMM Test Error Codes	6-16
6-10	Test 4 Extended Counter Error Messages	6-17
6-11	Maintenance Aids	6-23
6-12	Trigger Bandwidth Alternation	6-36

OPERATORS SAFETY SUMMARY

The general safety information in this part of the summary is for both operating and servicing personnel. Specific warnings and cautions will be found throughout the manual where they apply and do not appear in this summary.

Terms in This Manual

CAUTION statements identify conditions or practices that could result in damage to the equipment or other property.

WARNING statements identify conditions or practices that could result in personal injury or loss of life.

Terms as Marked on Equipment

CAUTION indicates a personal injury hazard not immediately accessible as one reads the markings, or a hazard to property, including the equipment itself.

DANGER indicates a personal injury hazard immediately accessible as one reads the marking.

Symbols in This Manual

⚠ This symbol indicates where applicable cautionary or other information is to be found. For maximum input voltage see Table 1-1.

Symbols As Marked on Equipment

ϟ DANGER — High voltage.

⏚ Protective ground (earth) terminal.

⚠ ATTENTION — Refer to manual.

Power Source

This product is intended to operate from a power source that does not apply more than 250 volts rms between the supply conductors or between either supply conductor and ground. A protective ground connection by way of the grounding conductor in the power cord is essential for safe operation.

Grounding the Product

This product is grounded through the grounding conductor of the power cord. To avoid electrical shock, plug the power cord into a properly wired receptacle before connecting to the product input or output terminals. A protective ground connection by way of the grounding conductor in the power cord is essential for safe operation.

Danger Arising From Loss of Ground

Upon loss of the protective-ground connection, all accessible conductive parts (including knobs and controls that may appear to be insulating) can render an electric shock.

Use the Proper Power Cord

Use only the power cord and connector specified for your product.

Use only a power cord that is in good condition.

For detailed information on power cords and connectors see Figure 2-1.

Use the Proper Fuse

To avoid fire hazard, use only a fuse of the correct type, voltage rating and current rating as specified in the parts list for your product.

Do Not Operate in Explosive Atmospheres

To avoid explosion, do not operate this product in an explosive atmosphere unless it has been specifically certified for such operation.

Do Not Remove Covers or Panels

To avoid personal injury, do not remove the product covers or panels. Do not operate the product without the covers and panels properly installed.

SERVICING SAFETY SUMMARY

FOR QUALIFIED SERVICE PERSONNEL ONLY

Refer also to the preceding Operators Safety Summary.

Do Not Service Alone

Do not perform internal service or adjustment of this product unless another person capable of rendering first aid and resuscitation is present.

Use Care When Servicing With Power On

Dangerous voltages exist at several points in this product. To avoid personal injury, do not touch exposed connections or components while power is on.

Disconnect power before removing protective panels, soldering, or replacing components.

Power Source

This product is intended to operate from a power source that does not apply more than 250 volts rms between the supply conductors or between either supply conductor and ground. A protective ground connection by way of the grounding connector in the power cord is essential for safe operation.

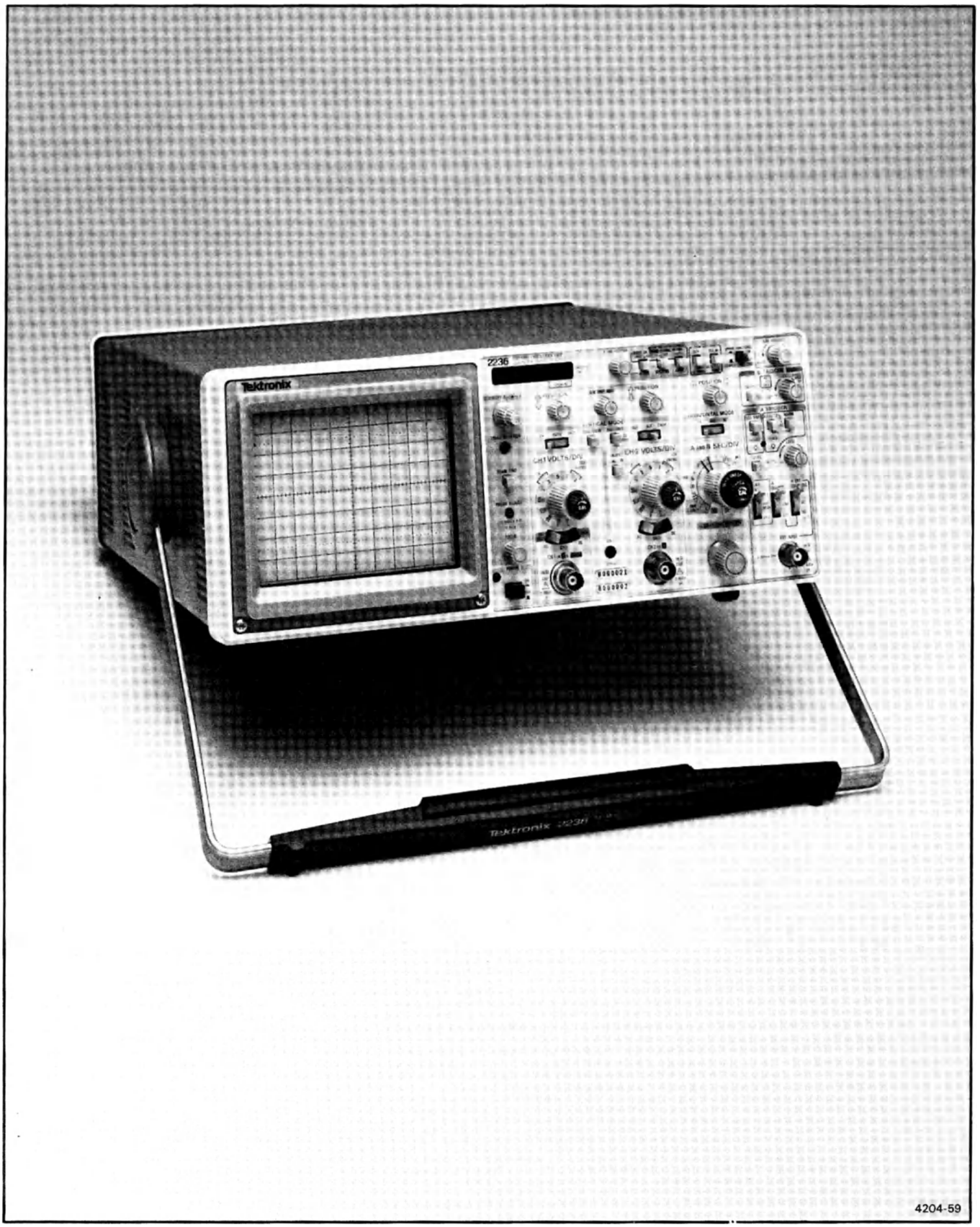

The 2236 Oscilloscope.

SPECIFICATION

INTRODUCTION

The TEKTRONIX 2236 oscilloscope is a lightweight 100-MHz instrument with a Counter, Timer, and Multimeter (CTM). Measurement values are displayed on the Vacuum Fluroescent nine-digit readout.

The dual vertical channel system supplies calibrated deflection factors from 2 mV per division to 5 V per division. Trigger circuits enable stable triggering over the full bandwidth of the vertical system. The horizontal system provides calibrated sweep speeds from 0.5 s per division to 50 ns per division, along with delayed-sweep features. A X10 magnifier circuit extends the maximum sweep speed to 5 ns per division when the A and B SEC/DIV switch is set to 0.05 μs.

The Counter Timer section of the CTM measures frequency, period, width, and totalizes, and provides a digital readout of oscilloscope delay time and delta time. It also provides frequency, period, and width measurements and totalizes on portions of a waveform selected by the intensified zone (gated measurements). Counting and timing measurements are made through the A and B Trigger system. All Counter Timer measurement values are displayed on the readout.

The Multimeter section of the CTM measures voltages and resistance through the floating input connectors located on the right side of the instrument. Voltages can also be measured through the CH 1 or X & DMM connector. Temperature measurements can be made by connecting the optional temperature probe to the Multimeter input connectors. The Multimeter measurement values are displayed with a 3 3/4-digit (5000 count) format, on the digital readout.

ACCESSORIES

The instrument is shipped with the following standard accessories:

- 1 Operators manual
- 1 Probe package
- 1 Power cord
- 2 Multimeter test lead clips
- 2 Multimeter test leads

For part numbers and information about instrument accessories, refer to the tabbed "Accessories" part of the Replaceable Mechanical Parts section in the back of this manual.

The service manual and all other optional accessories are orderable from Tektronix, Inc. A local Tektronix Field Office, representative, or the Tektronix product catalog can provide ordering and product information.

PERFORMANCE CONDITIONS

The following electrical characteristics (Table 1-1) are valid for the 2236 when it has been adjusted at an ambient temperature between +18°C and +28°C, has had a warm-up period of at least 30 minutes, and is operating at an ambient temperature between 0°C and +50°C (unless otherwise noted).

Items listed in the "Performance Requirements" column are verifiable qualitative or quantitative limits, while items listed in the "Supplemental Information" column are either explanatory notes, calibration setup descriptions, performance characteristics for which no absolute limits are specified, or characteristics that are impractical to check.

Environmental characteristics are given in Table 1-2. The 2236 meets the requirements of MIL-T-28800C, paragraphs 4.5.5.1.3, 4.5.5.1.4, and 4.5.5.1.2.2 for Type III, Class 5 equipment, except where otherwise noted.

Physical characteristics of the instrument are listed in Table 1-3.

Table 1-1
Electrical Characteristics

Characteristics	Performance Requirements	Supplemental Information
VERTICAL DEFLECTION SYSTEM		
Deflection Factor		5 mV per division to 5 V per division gain is adjusted with VOLTS/DIV switch set to 10 mV per division. 2 mV per division gain is adjusted with VOLTS/DIV switch set to 2 mV per division
Range	2 mV per division to 5 V per division in a 1-2-5 sequence	
Accuracy		
+15°C to +35°C	±2%.	
0°C to +50°C	±3%.[a]	
Range of VOLTS/DIV Variable Control	Continuously variable between settings. Increases deflection factor by at least 2.5 to 1.	
Step Response		Rise time is calculated from the formula: $\frac{0.35}{\text{Bandwidth } (-3 \text{ dB})}$
Rise Time		
0°C to +35°C		
5 mV per Division to 5 V per Division	3.5 ns or less.[a]	
2 mV per Division	3.9 ns or less.[a]	
+35°C to +50°C		
5 mV per Division to 5 V per Division	3.9 ns or less.[a]	
2 mV per Division	4.4 ns or less.[a]	
Aberrations		Measured with 5-division reference signal, centered vertically, from a 50 Ω source driving a 50 Ω coaxial cable terminated in 50 Ω at the input connector with the VOLTS/DIV Variable control in the CAL detent.
Positive-Going Step		
2 mV per Division	+5%, −5%, 5% p-p.	
5 mV per Division to 0.5 V per Division	+4%, −4%, 4% p-p.	
1 V per Division to 5 V per Division	+14%, −14%, 14% p-p.[a]	
Bandwidth (−3 dB)		Measured with a vertically centered 6-division reference signal from a 50 Ω source driving a 50 Ω coaxial cable that is terminated in 50 Ω, both at the input connector and at the probe input, with the VOLTS/DIV Variable control in the CAL detent.
0°C to +35°C		
5 mV per Division to 5 V per Division	Dc to at least 100 MHz.	
2 mV per Division	Dc to at least 90 MHz.	
+35°C to +50°C		
5 mV per Division to 5 V per Division.	Dc to at least 90 MHz.[a]	
2 mV per Division	Dc to at least 80 MHz.[a]	

[a]Performance Requirement not checked in Service Manual.

Table 1-1 (cont)

Characteristics	Performance Requirements	Supplemental Information
VERTICAL DEFLECTION SYSTEM (cont)		
Bandwidth (cont)		
AC Coupled Lower Limit	10 Hz or less at −3 dB.[a]	
Bandwidth Limiter	Upper limits (−3 dB) bandpass at 20 MHz ±10%.	
Chop Mode Switching Rate	500 kHz ±30%.[a]	
Input Characteristics		
Resistance		
Channel 1	1 MΩ ±0.2%[a]	
Channel 2	1 MΩ ±2%[a]	
Capacitance (Channels 1 and 2)	22 pF ±0.5 pF[a]	
Maximum Safe Input Voltage ⚠		See Figure 1-1 for derating curve.
DC Coupled	400 V (dc + peak ac) or 800 V ac p-p to 10 kHz or less.[a]	
AC Coupled	400 V (dc + peak ac) or 800 V ac p-p to 10 kHz or less.[a]	
Common-Mode Rejection Ratio (CMRR)	At least 10 to 1 at 50 MHz.	Checked at 10 mV per division for common-mode signals of 6 divisions or less with VOLTS/DIV Variable control adjusted for best CMRR at 50 kHz.
Input Current	1.0 nA or less (0.5 division trace shift at 2 mV per division).[a]	
Trace Shift with Attenuator Rotation	0.75 division or less.[a]	VOLTS/DIV Variable control in CAL detent.
Trace Shift as VOLTS/DIV Variable Control is Rotated	1.0 division or less.[a]	
Trace Shift with Invert	1.5 division or less.[a]	
Channel Isolation	Greater than 100 to 1 at 50 MHz.	
POSITION Control Range	At least ±11 divisions from graticule center.	

[a]Performance Requirement not checked in Service Manual.

Table 1-1 (cont)

Characteristics	Performance Requirements			Supplemental Information
TRIGGER SYSTEM				
A TRIGGER Sensitivity				External trigger signal from a 50 Ω source driving a 50 Ω coaxial cable terminated in 50 Ω at the input connector.
P-P AUTO and NORM Modes				
A Sweep	**10 MHz**	**60 MHz**	**100 MHz**	
Internal	0.35 div	1.2 div	1.5 div	Trigger sensitivities define signal amplitude required for stable display.
External	40 mV	150 mV	250 mV	
Counter				
Internal	0.5 div	1.5 div	2.0 div	
External	50 mV	160 mV	300 mV	
Lowest Useable Frequency in P-P AUTO Mode	20 Hz with 1.0 division internal or 100 mV external.[a]			
TV FIELD Mode	1.0 division of composite sync.[a]			
B TRIGGER Sensitivity (Internal Only)	**10 MHz**	**60 MHz**	**100 MHz**	
B Sweep	0.35 div	1.2 div	1.5 div	
Counter	0.5 div	1.5 div	2.0 div	
EXT INPUT				
Maximum Input Voltage ⚠	400 V (dc + peak ac) or 800 V ac p-p at 10 kHz or less.[a]			See Figure 1-1 for derating curve.
Input Resistance	1 MΩ ±2%.[a]			
Input Capacitance	22 pF ±2.5 pF.[a]			
AC Coupled	10 Hz or less at lower −3 dB point.[a]			
Offset	25 mV or less.			
LEVEL Control Range				
A TRIGGER (NORM)				
INT	Can be set to any point of the trace that can be displayed.[a]			
EXT, DC	At least ±1.6 V, 3.2 V p-p.			
EXT, DC ÷ 10	At least ±16 V, 32 V p-p.[a]			
B TRIGGER (Internal only)	Can be set to any point of the trace that can be displayed.[a]			
VAR HOLDOFF Control	Increases A Sweep holdoff time by at least a factor of 10.[a]			

[a]Performance Requirement not checked in Service Manual.

Table 1-1 (cont)

Characteristics	Performance Requirements		Supplemental Information
TRIGGER SYSTEM (cont)			
LEVEL Control Range (cont)			
Trigger View System			
Deflection Factor			
Internal	Same as vertical.		
External			
AC and DC	100 mV per division.		
DC ÷ 10	1 V per division.		
Accuracy	±20%.		
Delay Difference Between EXT INPUT and Either Vertical Channel	Less than 2.0 ns.[a]		
HORIZONTAL DEFLECTION SYSTEM			
Sweep Rate			
Calibrated Range			
A Sweep	0.5 s per division to 0.05 μs per division in a 1-2-5 sequence. X10 magnifier extends maximum sweep speed to 5 ns per division.		
B Sweep	50 ms per division to 0.05 μs per division in a 1-2-5 sequence. X10 magnifier extends maximum sweep speed to 5 ns per division.		
Accuracy	**Unmagnified**	**Magnified**	Sweep accuracy applies over the center 8 divisions. Exclude the first 25 ns of the sweep for magnified sweep speeds and anything beyond the 100th magnified division.
+15°C to +35°C	±2%	±3%	
0°C to +50°C	±3%[a]	±4%[a]	
POSITION Control Range	Start of sweep to 10th division will position past the center vertical graticule line in X1 or 100th division in X10.		
Sweep Linearity	±5%.		Linearity measured over any 2 of the center 8 divisions. With magnifier in X10, exclude the first 25 ns and anything past the 100th division.
Variable Control Range	Continuously variable between calibrated settings. Extends the A and B sweep speeds by at least a factor of 2.5.		

[a]Performance Requirement not checked in Service Manual.

Table 1-1 (cont)

Characteristics	Performance Requirements	Supplemental Information
HORIZONTAL DEFLECTION SYSTEM (cont)		
Sweep Length	Greater than 10 division.	
A/B SWP SEP Range	±3.5 divisions or greater.	
Delay Time	Applies to 0.5 μs per division and slower	
Dial Control Range	<0.5 +300 ns to >10 divisions.	
Jitter	One part or less in 10,000 (0.01%) of the maximum available delay time.	
X-Y OPERATION (X1 MAGNIFICATION)		
Deflection Factors	Same as Vertical Deflection System (with VOLTS/DIV Variable controls in CAL detent).	
Accuracy		Measured with a dc-coupled, 5-division reference signal.
X-Axis +15°C to +35°C	±3%.	
0°C to +50°C	±4%.[a]	
Y-Axis	Same as Vertical Deflection System.[a]	
Bandwidth (−3 dB)		Measured with a 5-division reference signal.
X-Axis	Dc to at least 2.5 MHz.	
Y-Axis	Same as Vertical Deflection System.[a]	
Phase Difference Between X- and Y-Axis Amplifiers	±3° from dc to 50 kHz.[a]	With dc-coupled inputs.
PROBE ADJUST		
Output Voltage of PROBE ADJUST Jack	0.5 V ±5%.	
Repetition Rate	1 kHz ±20%[a].	
Z-AXIS INPUT		
Sensitivity	5 V causes noticeable modulation. Positive-going input decreases intensity.	Useable frequency range is dc to 20 MHz.
Maximum Safe Input Voltage	30 V (dc + peak ac) or 30 VC p-p ac at 1 kHz or less.[a]	
Input Resistance	10 kΩ ±10%.[a]	

[a]Performance Requirement not checked in Service Manual.

Table 1-1 (cont)

Characteristics	Performance Requirements		Supplemental Information
COUNTER-TIMER			
Frequency	**Ranges**	**Maximum Resolution[a]**	
	100 Hz 1 kHz	0.00001 Hz 0.0001 Hz	
	10 kHz 100 kHz	0.001 Hz 0.01 Hz	
	1 MHz 10 MHz 100 MHz	0.1 Hz 1 Hz 10 Hz	
Maximum Input Frequency	Same as trigger specifications.[a]		
Minimum Displayable Frequency	0.20000 Hz.[a]		
Time Base Error			
Standard	$\pm 1 \times 10^{-5}$ (10 parts per million.) Less than 5×10^{-6} change per year.[a]		
Option 14	$\pm 5 \times 10^{-7}$ (0.5 parts per million.) Less than 1×10^{-7} change per month.[a]		
Nongated Mode (Hz)			
Resolution Error	$\left[\pm\left(\frac{1.4\ TJE}{N}\right)F^2 \pm LSD\right]^{a,b}$		
Accuracy	Resolution Error ± (TBE)F		
Gated Mode (Hz)			
Resolution Error	$\left[\pm\left(\frac{1.4\ TJE}{N_g\sqrt{G}}\right)F^2 \pm LSD\right]^{a,b}$		
Accuracy	Resolution Error ± Frequency Gating Error ± (TBE)F.		
Gating Error	$\left(\frac{2\ ns}{N_g}\right)F^{2\,a}$		

TJE = Trigger jitter error (seconds).

F = Frequency of input (Hz).

N = Number of input samples accumulated = F(0.25 second ±0.01 second) ≥1.

LSD = One count in least significant digit.

TBE = Time base error (fractional).

G = Number of gate intervals in one measurement = (A sweep repetition rate) (0.25 second ±0.01 second) ≥1.

N_g = Number of samples inside one gate interval ≥1.

[a]Performance Requirement not checked in Service Manual.

[b]Reduces to ± LSD for pulse inputs with transition times ≤20 ns.

Table 1-1 (cont)

Characteristics	Performance Requirements		Supplemental Information
COUNTER-TIMER (cont)			
Period	**Ranges**	**Maximum Resolution[a]**	
	5 s 1 s 100 ms	1 μs 100 ns 10 ns	
	10 ms 1 ms 100 μs	1 ns 100 ps 10 ps	
Minimum Input Period	See trigger specifications.		
Maximum Displayable Period	5 seconds.[a]		
Nongated Mode (seconds)			
Resolution Error	$\left[\pm\frac{1.4\ TJE}{N} \pm LSD\right]^{a,b}$		
Accuracy	Resolution Error ± (TBE)P.[a]		
Gated Mode (seconds)			
Resolution Error	$\left[\pm\frac{1.4\ TJE}{N_g\sqrt{G}} \pm LSD\right]^{a,b}$		
Accuracy	Resolution Error ± Time Interval Gating Error ± (TBE)P.		
Time Interval Gating Error	$\frac{2\ ns}{N_g}$		
Width	**Ranges**	**Maximum Resolution[a]**	
	5 s 1 s 100 ms	1 μs 100 ns 10 ns	
	10 ms 1 ms 100 μs	1 ns 100 ps 10 ps	

TJE = Trigger jitter error (seconds).

P = Period of input (seconds)

N = Number of input samples accumulated = F(0.25 second ±0.01 second) ≥1.

LSD = One count in least significant digit.

TBE = Time base error (fractional).

G = Number of gate intervals in one measurement = (A sweep repetition rate) (0.25 second ±0.01 second) ≥1.

N_g = Number of samples inside one gate interval ≥1.

[a]Performance Requirement not checked in Service Manual.

[b]Reduces to ± LSD for pulse inputs with transition times ≤20 ns.

Table 1-1 (cont)

Characteristics	Performance Requirements	Supplemental Information
	COUNTER-TIMER (cont)	
Width (cont)		
Minimum Input Width	5 ns.[a]	
Maximum Displayable Width	5 seconds.[a]	
Nongated Mode (seconds)		
Resolution Error	$\left[\pm\frac{1}{\sqrt{N}}\text{(TJE of leading edge} \pm \text{TJE of trailing edge)} \pm \frac{10\text{ ns}}{\sqrt{N}}\right]^{a,c}$	
Accuracy	Resolution Error ± (TBE)W ± Hysteresis Error ±10 ns.	Checked in A TRIGGER NORM MODE.
Gated Mode (seconds)		
Accuracy	Resolution Error[d] ± (TBE)W ± Hysteresis Error ± Time Interval Gating Error ±10 ns.	
Hysteresis		
Error (seconds)	$\left[\frac{\text{Sensitivity}}{2}\left(\frac{1}{\text{slew rate of trailing edge}} - \frac{1}{\text{slew rate of leading edge}}\right)\right]^{a,e}$	
Sensitivity	See A and B TRIGGER sensitivities expressed in divisions on screen.[a]	Slew rate expressed in divisions on screen.
Delay Time	**Ranges** / **Maximum Resolution[a]**	
	5 s / 1 μs 1 s / 100 ns 100 ms / 10 ns	
	10 ms / 1 ns 1 ms / 100 ps 100 μs / 10 ps	

TJE = Trigger jitter error (seconds).

N = Number of input samples accumulated = F(0.25 second ±0.01 second) ≥1.

TBE = Time base error (fractional).

W = Width being measured in seconds.

[a]Performance Requirement not checked in Service Manual.

[c]Reduces to $\pm\frac{10\text{ nsec}}{\sqrt{N}}$ for pulse inputs with transition times ≤20 ns.

[d]Same as resolution error in nongated mode.

[e]Reduces to 5 ns for pulse inputs with transition times ≤20 ns and trigger level centered on waveform.

Table 1-1 (cont)

Characteristics	Performance Requirements	Supplemental Information
	COUNTER-TIMER (cont)	
Delay Time (cont)		
Minimum Displayable Delay Time	500 ns.[a]	
Maximum Displayable Delay Time	2.5 seconds.[a]	
B Triggered After Delay (seconds)		
Resolution Error	$\left[\pm \frac{1}{\sqrt{G}}\text{(TJE of leading edge} \pm \text{TJE of trailing edge)} \pm \frac{10\text{ ns}}{\sqrt{G}}\right]^{a,f}$	
Accuracy	Resolution Error ± (TBE)Td ± 20 ns.	
Delta Time	**Ranges** / **Maximum Resolution[a]**	
	5 s / 1 μs 1 s / 100 ns 100 ms / 10 ns 10 ms / 1 ns 1 ms / 100 ps 100 μs / 10 ps	
Maximum Displayable Delta Time	2.5 seconds[a]	
B Runs After Delay (seconds)		
Resolution Error	$\pm \frac{2\text{(delay time jitter)}}{\sqrt{G}} \pm \frac{10\text{ nsec}^a}{\sqrt{G}}$	
Accuracy	Resolution Error ± (TBE)TΔ.	

G = Number of gate intervals in one measurement = (A sweep repetition rate) (0.25 second ±0.01 second) ≥1.

TBE = Time base error (fractional).

Td = Delay time being measured in seconds.

TJE = Trigger jitter error (seconds).

TΔ = Delta time being measured in seconds.

[a]Performance Requirement not checked in Service Manual.

[f]Reduces to $\pm \frac{10\text{ nsec}}{\sqrt{G}}$ for pulse inputs with transition times ≤20 ns.

Table 1-1 (cont)

Characteristics	Performance Requirements		Supplemental Information
COUNTER-TIMER (cont)			
Delta Time (cont)			
B Runs After Delay (cont)			
B Triggered After Delay With VERTICAL MODE Switch in CH 1, CH 2, ADD, and CHOP (seconds)			
Resolution Error	$\left[\pm \frac{1}{\sqrt{G}} (\text{TJE of leading edge} \pm \text{TJE of trailing edge}) \pm \frac{20\text{ ns}}{\sqrt{G}}\right]^{a,f}$		
Accuracy	Resolution Error ± (TBE)TΔ ± 50 ps.		
Resolution and Accuracy Definitions			
Trigger Jitter Error (TJE), *Through Vertical Input* Connectors (in seconds)	$\frac{\sqrt{(e_{n1})^2 + (e_{n2})^2}}{\text{Slew rate of triggering edge}}$ [a]		Slew rate expressed in divisions on *screen per second.*
Value of e_{n1} (divisions, RMS)	**BW LIMIT On[a]**	**BW LIMIT Off[a]**	
2 mV per Division	0.08	0.1	
5 mV per Division to 5 V per Division	0.04	0.05	
MULTIMETER			
DC Volts	**Ranges**	**Resolution[a]**	
	0.5 V	100 μV	
	5 V	1 mV	
	50 V	10 mV	
	500 V	100 mV	
Display Update Rate			≥2.5 per second.

G = Number of gate intervals in one measurement = (A sweep repetition rate) (0.25 second ±0.01 second) ≥1.

TJE = Trigger jitter error (seconds).

N = Number of input samples accumulated = F(0.25 second ±0.01 second) ≥1.

TBE = Time base error (fractional).

TΔ = Delta time being measured in seconds.

e_{n1} = RMS noise of vertical system (in divisions on screen).

e_{n2} = RMS noise voltage of input signal (in divisions on screen).

[a]Performance Requirement not checked in Service Manual.

[f]Reduces to $\pm \frac{10\text{ nsec}}{\sqrt{G}}$ for pulse inputs with transition times ≤20 ns.

Table 1-1 (cont)

Characteristics	Performance Requirements		Supplemental Information
MULTIMETER (cont)			
DC Volts (cont)			
Accuracy			
+18°C to +28°C	±(0.1% of reading + 1 LSD).		
0°C to +18°C and +28°C to +40°C.	±(0.2% of reading + 4 LSDs).[a]		
Normal Mode Rejection	≥50 dB from 48 Hz to 62 Hz.		
RMS Volts (AC Coupled)	**Ranges**	**Resolution[a]**	
	0.5 V	100 μV	
	5 V	1 mV	
	50 V	10 mV	
	350 V	100 mV	
Display Update Rate			≥2.5 per second.
Accuracy (20 Hz to 20 kHz)			
+18°C to +28°C	±(1.0% of reading + 6 LSDs).		
0°C to +18°C and +28°C to +40°C	±(1.5% of reading + 8 LSDs).[a]		
Common Mode Rejection	≥60 dB from 48 Hz to 62 Hz.		
Crest Factor	≤3.0 to maintain stated accuracy.[a]		
Resistance	**Ranges**	**Resolution[a]**	
	50 Ω	0.01 Ω	
	500 Ω	0.1 Ω	
	5 KΩ	1 Ω	
	50 KΩ	10 Ω	
	500 KΩ	100 Ω	
	5 MΩ	1 KΩ	
	50 MΩ	10 KΩ	
	200 MΩ	100 KΩ	
	2 GΩ	10 MΩ	
Display Update Rate			≥2.5 per second.
Overrange Indication (Resistance ≥2 GΩ)	Display indicates "OPEN".[a]		

LSD = One count in least significant digit.

[a]Performance Requirement not checked in Service Manual.

Table 1-1 (cont)

Characteristics	Performance Requirements				Supplemental Information
MULTIMETER (cont)					
Resistance (cont)					
Diode Detection (Fully Automatic)					
Detectable Forward Voltage Drop	0.15 volts to 2.0 volts.[a]				
Minimum Shunt Resistance	≥2000 Ω per volt of forward drop.[a]				Resistance shunts detectable device.
Maximum Series Resistance	400 Ω per volt of forward drop.[a]				Resistance in series with detectable device.
Forward Drop Measurement Accuracy	±(1% of reading +1 LSD).[a]				
Accuracy	**50 Ω**	**500 Ω to 50 MΩ**	**200 MΩ**	**2 GΩ**	
+18°C to +28°C	±(0.3% of reading +20 LSDs)	±(0.15% of reading +2 LSDs)	±(1.0% of reading +1 LSD)	±(10.0% of reading +1 LSD)	
0°C to +18°C and +28°C to +40°C	±(0.5% of reading +22 LSDs)[a]	±(0.2% of reading +4 LSDs)[a]	±(1.5% of reading +2 LSDs)[a]	±(15.0% of reading +2 LSDs)[a]	
Continuity	With less than 5.0 Ω ±1 Ω mesured, an audible tone will be generated.[a]				
Temperature					With the temperature probe not plugged in, the readout will display "ProbE-?"
Probe Tip Measurement Range	−62°C to +240°C in one range.[a]				
Resolution					0.1° (C or F).
Display Update Rate					≥0.9 per second.
Accuracy (At these Instrument Ambient Temperatures)					No special calibration required for temperature probe (P6602).
+18°C to +28°C	±(2% of reading ±1.5°C) or ±(2% of reading ±2.7°F).				
0°C to +18°C and +28°C to +50°C	±(2% of reading ±2.0°C) or ±(2% of reading ±3.6°F).[a]				

LSD = One count in least significant digit.

[a]Performance Requirement not checked in Service Manual.

Table 1-1 (cont)

Characteristics	Performance Requirements		Supplemental Information
MULTIMETER (cont)			
Multimeter Inputs	Isolated from the oscilloscope ground.[a]		In all CTM functions and ranges.
Input Impedance			
Resistance (DCV)	10 MΩ ±0.25%.[a]		
Capacitance (AC RMSV)	180 pF ±10%.[a]		
Maximum Safe Input Voltage			
+ (Positive) Input to Ground	500 V (dc + peak ac).[a]		
− (Negative) Input to Ground	500 V (dc + peak ac).[a]		
Positive to Negative Inputs	500 V (dc + peak ac).[a]		
CH 1 Volts	**Ranges**	**Resolution[a]**	Ranges determined by CH 1 VOLTS/DIV switch. Multimeter automatically switches to 10X ranges when a P6121 is used
1X Probe	0.5 V	100 μV	
	5 V	1 mV	
	50 V	10 mV	
10X Probe (P6121)	5 V	1 mV	
	50 V	10 mV	
	500 V	100 mV	
Dc Volts			Selected by setting the Channel 1 input coupling switch to DCV.
Display Update Rate	≥2.3 per second.[a]		
Accuracy	**1X Probe**	**10X Probe**	
+18°C to +28°C	±(0.30% of reading +6 LSDs)	±(0.50% of reading +6 LSDs)	
0°C to +18°C and +28°C to +50°C	±(0.5% of reading +20 LSDs)[a]	±(0.7% of reading +20 LSDs)[a]	
Normal Mode Rejection Ratio	≥30 dB from 48 Hz to 62 Hz.[a]		

LSD = One count in least significant digit.

[a]Performance Requirement not checked in Service Manual.

Table 1-1 (cont)

Characteristics	Performance Requirements			Supplemental Information
MULTIMETER (cont)				
CH 1 Volts (cont)				
AC RMS Volts				Selected by setting the Channel 1 input coupling switch to AC RMSV.
Display Update Rate				≥2.5 per second.
Accuracy	1X Probe		P6121 10X Probe	Probe compensation is adjusted ±0.1% of reading with CH 1 VOLTS VOLTS/DIV switch set to 0.5 (X10) apply 4 V ±0.01%, 20 kHz sinewave.
	50 Hz to 100 Hz	100 Hz to 20 kHz	20 Hz to 20 kHz	
+18°C to +28°C	±(2.0% of reading +6 LSDs)	±(1.0% of reading +6 LSDs)	±(2.0% of reading +6 LSDs)	
0°C to +18°C and +28°C to +50°C	±(2.25% of reading +8 LSDs) [a]	±(1.25% of reading +8 LSDs) [a]	±(2.25% of reading +8 LSDs) [a]	
Crest Factor	≤3.0 to maintain stated accuracy.[a]			
POWER SOURCE				
Line Voltage Ranges	90 V to 250 V.[a]			
Line Frequency	48 Hz to 440 Hz.[a]			
Maximum Power Consumption	60 W (110 VA).[a]			
Line Fuse	1.25 A, 250 V, slow-blow.			
CATHODE-RAY TUBE				
Display Area	80 by 100 mm.[a]			
Standard Phosphor	P31.[a]			
Nominal Accelerating Voltage	14 kV.[a]			

LSD = One count in least significant digit.

[a]Performance Requirement not checked in Service Manual.

Table 1-2
Environmental Characteristics

Characteristics	Description
	NOTE *The instrument meets the requirements of MIL-T-28800C, paragraphs 4.5.5.1.3, 4.5.5.1.4, and 4.5.5.1.2.2 for Type III, Class 5 equipment, except for maximum operating temperature, and minimum storage temperature as indicated.*
Temperature	
Operating AC RMSV, DCV, and Ω Modes	0° to 40°C (+32°F to +104°F).
All Other Modes	0° to +50°C (+32° to +122°F).
Nonoperating	−50°C to +75°C (−58°F to +167°F). Tested to MIL-T-28800C paragraphs 4.5.5.1.3 and 4.5.5.1.4, except in 4.5.5.1.3 steps 4 and 5 (0°C operating test) are performed ahead of step 2 (−50°C nonoperating test). Equipment shall remain off upon return to room ambient during step 6. Excessive condensation shall be removed before operating during step 7.
Altitude	
Operating	To 4,500 m (15,000 ft). Maximum operating temperature decreased 1°C per 1,000 ft above 5,000 ft.
Nonoperating	To 15,000 m (50,000 ft).
Humidity (Operating and Nonoperating)	5 cycles (120 hours) referenced to MIL-T-28800C paragraph 4.5.5.1.2.2, for Type III, Class 5 instruments. Nonoperating and operating of 95% −5% to +0% relative humidity. Operating at +30°C and +40°C for AC RMSV, DCV, and Ω Modes only and operating at +30°C and +50°C for all other modes. Nonoperating at +30°C to +60°C.
Vibration (Operating)	15 minutes along each of 3 major axes at a total displacementof 0.015 inch p-p (2.4 g's at 55 Hz) with frequency varied from 10 Hz to 55 Hz to 10 Hz in 1-minute sweeps. Hold for 10 minutes at 55 Hz in each of the 3 major axes. All major resonances must be above 55 Hz.
Shock (Operating and Nonoperating)	30 g's, half-sine, 11-ms duration, 3 shocks per axis each direction, for a total of 18 shocks.
EMI	Meets radiated and conducted emission requirements per VDE 0871 Class B.

Table 1-3
Physical Characteristics

Characteristics	Description
Weight With Power Cord	
With Cover, Probes, and Pouch	7.3 kg (16 lb).
Without Cover, Probes, and Pouch	6.0 kg (13.3 lb).
Domestic Shipping Weight	10.1 kg (22.2 lb).
Height	137 mm (5.4 in).
Width	
With Handle	360 mm (14.2 in).
Without Handle	328 mm (12.9 in).
Depth	
With Front Cover	446 mm (17.5 in).
Without Front Cover	440 mm (17.3 in).
With Handle Extended	513 mm (20.2 in).

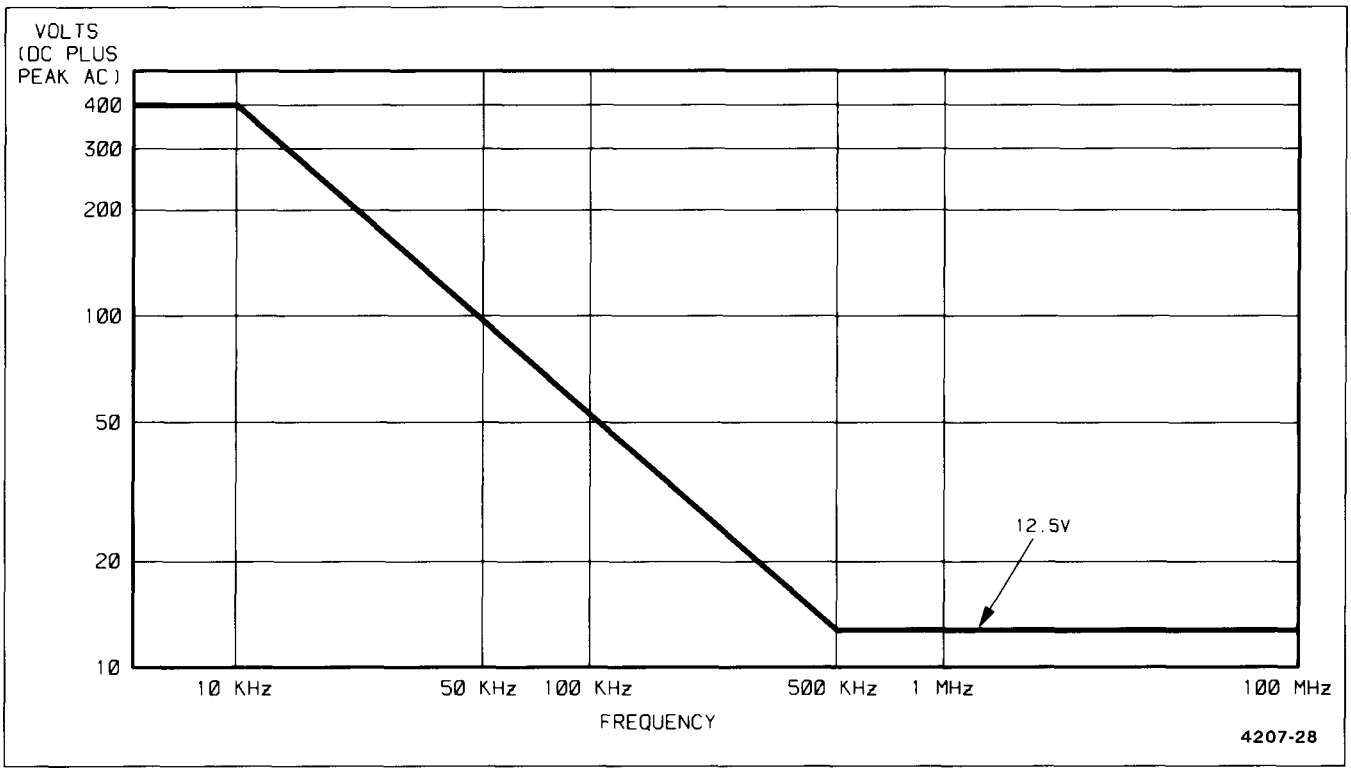

Figure 1-1. Maximum input voltage vs frequency derating curve for CH 1 OR X & DMM, CH 2 OR Y, and EXT INPUT connectors.

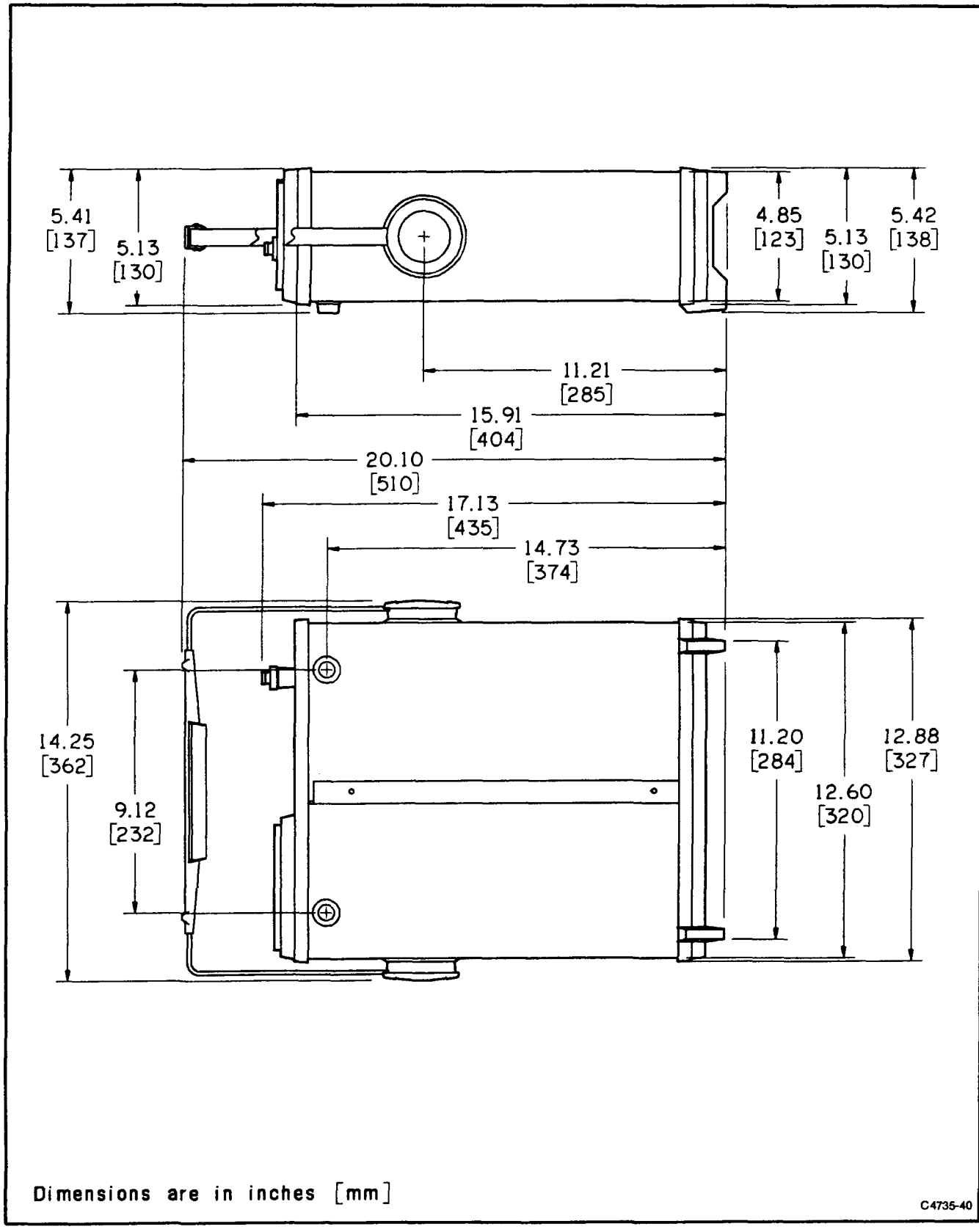

Figure 1-2. Physical dimensions of the 2236 Oscilloscope.

OPERATING INSTRUCTIONS

PREPARATION FOR USE

SAFETY

Refer to the "Operators Safety Summary" at the front of this manual for power source, grounding, and other safety considerations pertaining to the use of the 2236. Before connecting the instrument to a power source, carefully read the following about line voltages, power cords, and fuses.

LINE VOLTAGE

The instrument is capable of continuous operation using input voltages that range from 90 V to 250 V nominal at frequencies from 48 Hz to 440 Hz.

POWER CORD

A detachable three-wire power cord with a three-contact plug is provided with each instrument to permit connection to both the power source and protective ground. The plug protective-ground contact connects (through the protective-ground conductor) to the accessible metal parts of the instrument. For electrical-shock protection, insert this plug only into a power outlet that has a securely grounded protective-ground contact.

Instruments are shipped with the required power cord as ordered by the customer. Available power cords are illustrated in Figure 2-1, and part numbers are listed on the "Accessories" page at the back of this manual. Contact your Tektronix representative or local Tektronix Field Office for additional power-cord information.

Plug Configuration	Usage	Line Voltage	Reference Standards
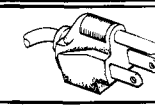	North American 120V/ 15A	120V	ANSI C73.11 NEMA S-15-P IEC 83
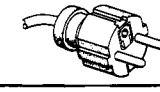	Universal Euro 240V/ 10-16A	240V	CEE (7),II,IV,VII IEC 83
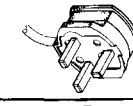	UK 240V/ 13A	240V	BS 1363 IEC 83
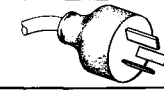	Australian 240V/ 10A	240V	AS C112
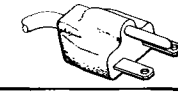	North American 240V/ 15A	240V	ANSI C73.20 NEMA 6-15-P IEC 83
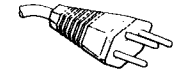	Switzerland 220V/ 6A	220V	SEV

Abbreviations:
ANSI — American National Standards Institute
AS — Standards Association of Australia
BS — British Standards Institution
CEE — International Commission on Rules for the Approval of Electrical Equipment
IEC — International Electrotechnical Commission
NEMA — National Electrical Manufacturer's Association
SEV — Schweizevischer Elektrotechischer Verein

(2931-21)4204-53

Fig. 2-1. Optional power cords.

LINE FUSE

The instrument fuse holder is located on the rear panel (see Figure 2-2) and contains the line fuse. The following procedure can be used to verify that the proper fuse is installed or to install a replacement fuse.

1. Unplug the power cord from the power-input source (if applicable).

2. Press in and slightly rotate the fuse-holder cap counterclockwise to release it.

3. Pull the cap (with the attached fuse inside) out of the fuse holder.

4. Verify proper fuse value (see Power Source of Table 1-1 in the "Specification" section).

5. Reinstall the fuse (or replacement fuse) and the fuse-holder cap.

INSTRUMENT COOLING

Always maintain adequate instrument cooling. The ventilation holes on both sides of the equipment cabinet and the fan-exhaust holes in the rear panel must remain free of obstruction.

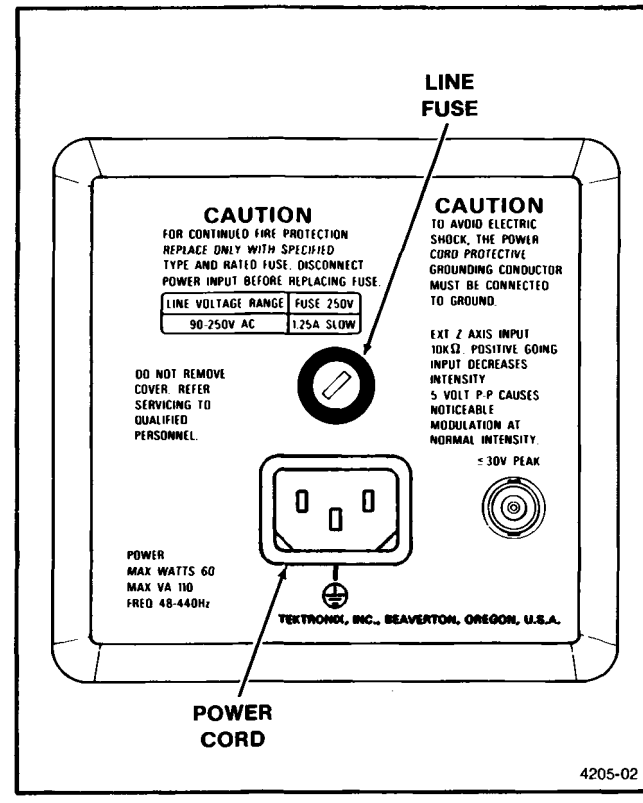

Fig. 2-2. Fuse holder and power cord connector.

CONTROLS, CONNECTORS, AND INDICATORS

The following descriptions are intended to familiarize the operator with the location, operation, and function of the instrument's controls, connectors, and indicators.

DISPLAY, POWER, AND PROBE ADJUST

Refer to Figure 2-3 for location of items 1 through 8.

(1) **Internal Graticule**—Eliminates parallax viewing error between the trace and graticule lines. Rise-time amplitude and measurement points are indicated at the left edge of the graticule.

(2) **POWER Switch**—Turns instrument power on and off. Press in for ON; press again for OFF.

(3) **Power Indicator**—An LED that illuminates when power is available to the instrument and the POWER switch is set to ON (button in).

(4) **FOCUS Control**—Adjusts for optimum display definition.

(5) **PROBE ADJUST Connector**—Provides an approximately 0.5-V, negative-going, square-wave voltage (at approximately 1 kHZ) that permits an operator to compensate voltage probes and to check operation of the oscilloscope vertical system. It is not intended for verifying the accuracy of the vertical gain or time-base circuitry.

(6) **BEAM FIND Switch**—When held in, compresses the display to within the graticule area and provides a visible viewing intensity to aid in locating off-screen displays.

(7) **TRACE ROTATION Control**—Screwdriver adjustment used to align the crt trace with the horizontal graticule lines.

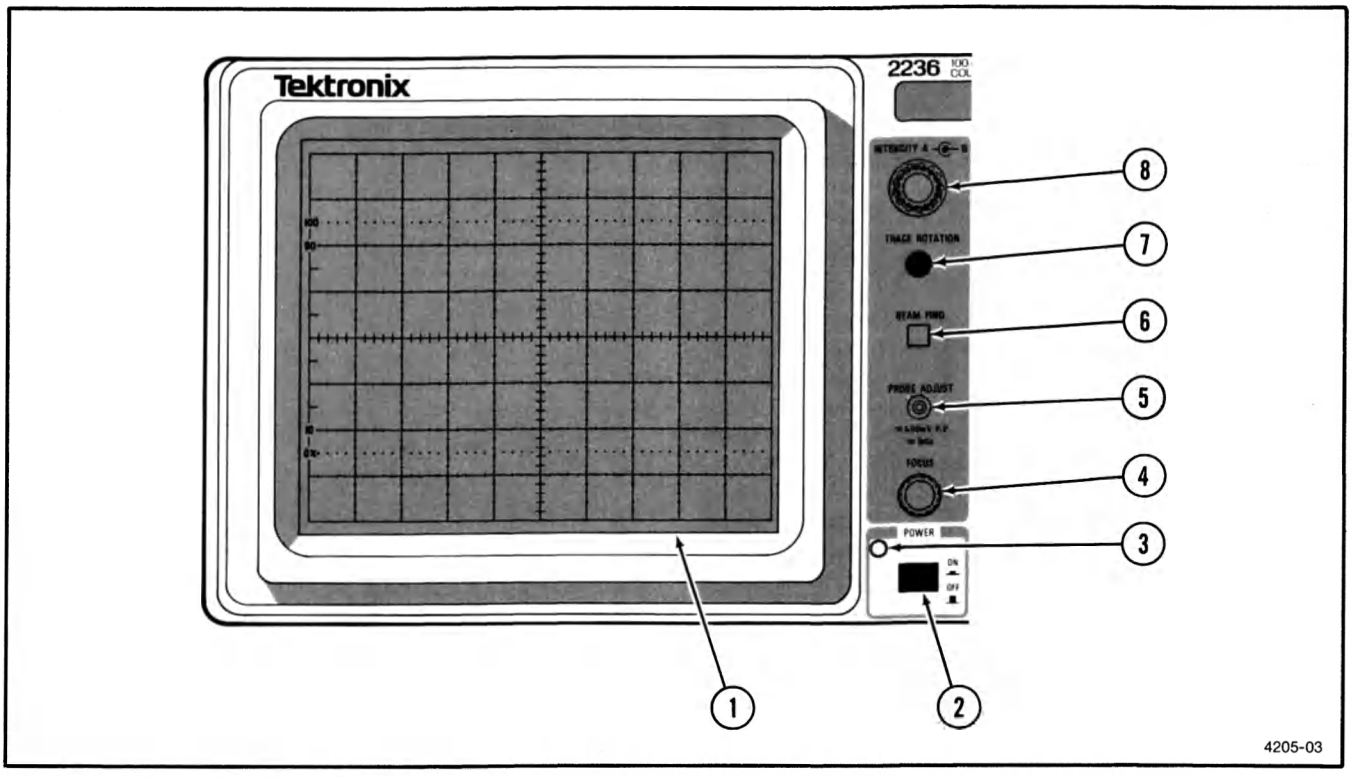

Fig. 2-3. Power and display controls and indicators and PROBE ADJUST output.

(8) **A and B INTENSITY Controls**—Determine the brightness of the A and B Sweep traces.

VERTICAL

Refer to Figure 2-4 for location of items 9 through 17.

(9) **CH 1 VOLTS/DIV and CH 2 VOLTS/DIV Switches**—Used to select the vertical deflection factor in a 1-2-5 sequence. To obtain a calibrated deflection factor, the VOLTS/DIV variable control must be in the calibrated (CAL) detent (fully clockwise). The CH 1 VOLTS/DIV switch selects the range for Multimeter voltage measurements in CH 1 V CTM mode.

1X—Indicates the deflection factor selected when using either a 1X probe or a coaxial cable.

10X PROBE—Indicates the deflection factor selected when using a 10X probe.

VOLTS/DIV Variable Controls—When rotated counterclockwise out of their calibrated detent positions, these controls provide continuously variable, uncalibrated deflection factors between the calibrated

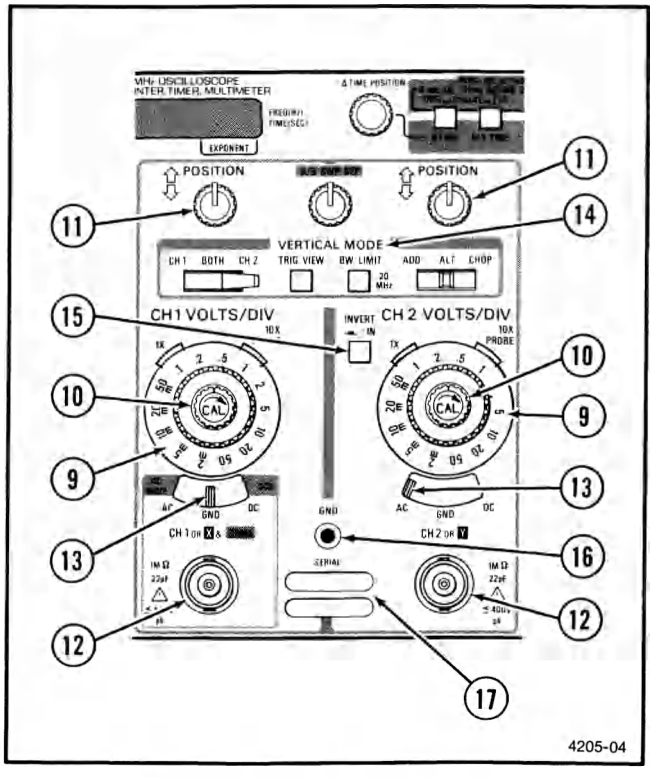

Fig. 2-4. Vertical controls and connectors.

settings of the VOLTS/DIV switches. In CH 1 V mode, the CH 1 VOLTS/DIV Variable control has no influence on the Channel 1 volts measurements.

(11) **POSITION Controls**—Used to vertically position the display on the crt. When the SEC/DIV switch is set to X-Y, the Channel 2 POSITION control moves the display vertically (Y-axis), and the Horizontal POSITION control moves the display horizontally (X-axis).

(12) **CH 1 OR X & DMM and CH 2 OR Y Input Connectors**—Provide for application of external signals to the instrument deflection system for display on the crt and to the Multimeter (CH 1 OR X & DMM input connector only. In normal deflection mode (SEC/DIV switch not set to X-Y), signals from both connectors provide vertical deflection on the crt. In the X-Y mode (SEC/DIV switch set to X-Y), the signal connected to the CH 1 OR X input connector provides horizontal deflection (X-axis), and the signal connected to the CH 2 OR Y input connector provides vertical deflection (y-axis).

(13) **Input Coupling (AC/AC RMSV-GND-DC/DCV and AC-GND-DC) Switches**—Three-position switches that select the method of coupling the input signals to the instrument deflection system. When in CH 1 V CTM mode the Channel 1 Input Coupling switch selects the type of voltage measurement the Multimeter will perform on the Channel 1 input signal (AC RMSV or DCV).

AC—Input signal is capacitively coupled to the vertical amplifier. The dc component of the input signal is blocked. Low-frequency limit (-3 dB point) is approximately 10 Hz.

GND—The input of the vertical amplifier is grounded to provide a zero (ground) reference-voltage display (does not ground the input signal). This switch position allows precharging the input coupling capacitor.

DC—All frequency components of the input signal are coupled to the vertical deflection systems.

(14) **VERTICAL MODE Switches**—Two three-position switches and two button switches are used to select the mode of operation for the vertical amplifier system.

CH 1—Selects only the Channel 1 input signal for display.

BOTH—Selects both Channel 1 and Channel 2 input signals for display. The BOTH position must be selected for either ADD, ALT, or CHOP operation.

CH 2—Selects only the Channel 2 input signal for display.

ADD—Displays the algebraic sum of the Channel 1 and Channel 2 input signals.

ALT—Alternately displays Channel 1 and Channel 2 input signals. The alternation occurs during retrace at the end of each sweep. This mode is useful for viewing both input signals at sweep speeds from 0.05 us per division to 0.2 ms per division.

CHOP—The display switches between the Channel 1 and Channel 2 input signals during the sweep. The switching rate is approximately 500 kHZ. This mode is useful for viewing both Channel 1 and Channel 2 input signals at sweep speeds from 0.5 ms per division to 0.5 s per division.

TRIG VIEW—Press in and hold this button to display a sample of the signal present in the A Trigger amplifier (for all A SOURCE switch settings). All other signal displays are removed while the TRIG VIEW button is held in.

BW LIMIT—When pressed in, this button switch limits the bandwidth of the vertical amplifier and the A Trigger system to approximately 20 MHz. Button must be pressed a second time to release it and regain full 100-MHz bandwidth operation. Provides a method for reducing interference from high-frequency signals when viewing low-frequency signals.

(15) **INVERT Switch**—Inverts the Channel 2 display when button is pressed in. Button must be pressed in a second time to release it and regain a noninverted display.

(16) **GND Connector**—Provides direct connection to the instrument chassis ground.

(17) **SERIAL and Mod Slots**—The SERIAL slot is imprinted with the instrument's serial number. The Mod slot contains the option number that is installed in the instrument.

HORIZONTAL

Refer to Figure 2-5 for location of items 18 through 24.

(18) **A and B SEC/DIV Switches**—Used to select the sweep speeds for the A and B Sweep generators in a

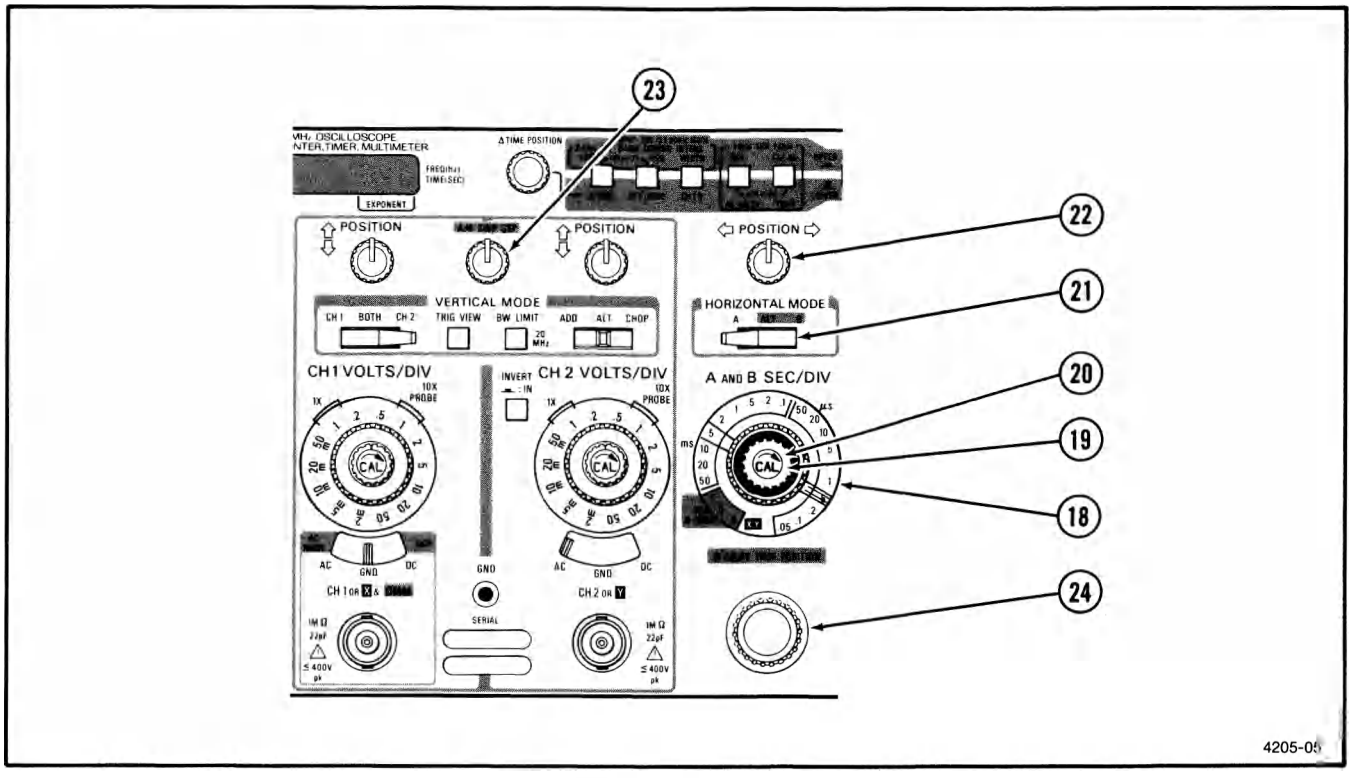

Fig. 2-5. Horizontal controls.

1-2-5 sequence. To obtain calibrated sweep speeds, the A and B SEC/DIV Variable control must be in the calibrated detent (fully clockwise).

A SEC/DIV—The calibrated sweep speed is shown between the two black lines on the clear plastic skirt. This switch also selects the delay time for delayed-sweep operation when used in conjunction with the B DELAY TIME POSITION control.

B SEC/DIV—The B Sweep speed is set by pulling out the DLY'D SWEEP knob and rotating it clockwise to a setting opposite the white line scribed on the knob. The B Sweep circuit is used only for delayed-sweep operation.

(19) **A and B SEC/DIV Variable Control**—Provides continuously variable, uncalibrated A Sweep speeds to at least 2.5 times the calibrated setting. It extends the slowest sweep speed to at least 1.25 s per division.

(20) **X10 Magnifier Switch**—To increase displayed sweep speed by a factor of 10, pull out the A and B SEC/DIV Variable knob. The fastest sweep speed can be extended to 5 ns per division. Push in the A and B SEC/DIV Variable knob to regain the X1 sweep speed.

(21) **HORIZONTAL MODE Switch**—Three-position switch determines the mode of operation for the horizontal deflection system, and for frequency, period, width, and totalize measurements.

A—Horizontal deflection is provided by the A Sweep generator at a sweep speed determined by the A SEC/DIV switch setting. Nongated frequency, period, width, and totalize measurements are made on the A Trigger signal.

ALT—Alternates the horizontal displays between the A Sweep (with an intensified zone) and the B Delayed Sweep. The A Sweep speed is determined by the setting of the A SEC/DIV switch. The B Sweep speed and the length of the intensified zone on the A Sweep are both determined by the B SEC/DIV switch setting. Gated frequency, period, width, and totalize measurements are made on the B Trigger signal. The gate interval is defined by the length of the intensified zone and is valid only when B Sweep is triggered.

B—Horizontal deflection is provided by the B Sweep generator at a sweep speed determined by

the B SEC/DIV switch setting. The start of the B Sweep is delayed from the start of the A Sweep by a time determined by the settings of both the A SEC/DIV switch and the B DELAY TIME POSITION control. Gated frequency, period, width, and totalize measurements are made on the B Trigger signal.

(22) **POSITION Control**—Horizontally positions both the A Sweep and the B Sweep displays and horizontally positions X-axis in the X-Y mode.

(23) **A/B SWP SEP Control**—Vertically positions the B Sweep trace with respect to the A Sweep trace when ALT HORIZONTAL MODE is selected.

(24) **B DELAY TIME POSITION Control**—Selects the amount of delay time between the start of the A Sweep and the start of the B Sweep. In Δ TIME mode, the B DELAY TIME POSITION control operates in conjunction with the Δ TIME POSITION control. The B DELAY TIME POSITION control moves both intensified zones (reference and comparisons), while the Δ TIME POSITION control moves only one intensified zone (time-measurement point). Time difference between the start of the two intensified zones is displayed on the readout. In DLY TIME mode, only one intensified zone is displayed which is controlled by the B DELAY TIME POSITION control. The time difference between the start of the A Sweep and the start of the intensified zone is displayed on the readout.

TRIGGER

Refer to Figure 2-6 for location of items 25 through 34.

A TRIGGER Mode Switches—Three section switch that determines the trigger mode for the A Sweep.

SGL SWP RESET—Press in the spring-return button momentarily to arm the A Sweep circuit or a single-sweep display or to reset the CTM when in TOTALIZE mode. In CH 1 V mode, pressing the SGL SWP RESET button will enter or cancel relative reference mode.

In single-sweep display mode, the trigger system operates the same as NORM, except only one sweep is displayed for each trigger signal. Another sweep cannot be displayed until the SGL SWP RESET button is momentarily pressed in again to reset the A Sweep circuit. This mode is useful for displaying and photographing either nonrepetitive

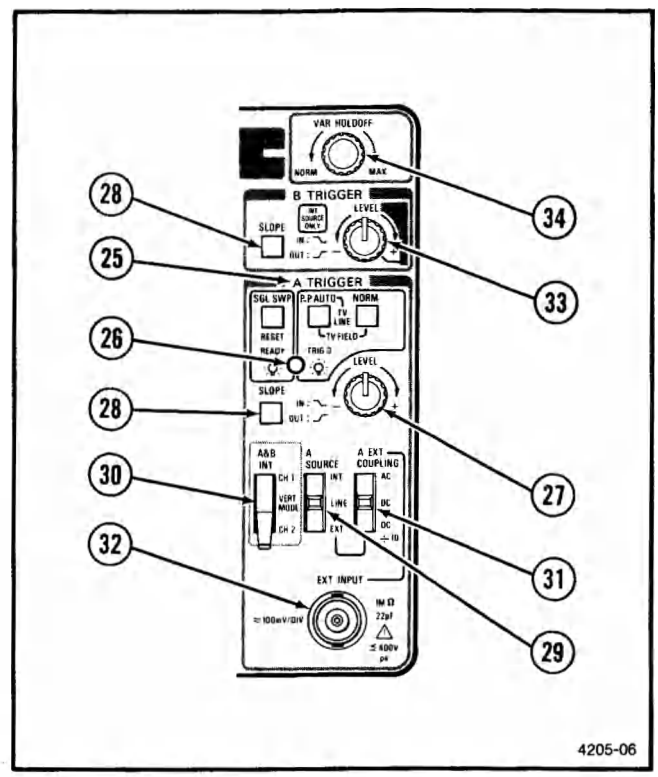

Fig. 2-6. Trigger controls, connector, and indicator.

signals or signals that cause unstable conventional displays (e.g., signals that vary in amplitude, shape, or time). It also allows the gated totalize function to acquire signals over just one gate interval for events counting.

P-P AUTO-TV LINE—Permits triggering on waveforms having repetition rates of at least 20 Hz and television lines. Sweep free-runs in the absence of an adequate trigger signal or when the repetition rate is below 20 Hz. The range of the A TRIGGER LEVEL control is restricted to the peak-to-peak range of the trigger signal.

NORM—Sweep is initiated when an adequate trigger signal is applied. In the absence of a trigger signal, no baseline trace will be present.

TV FIELD—Press in both P-P AUTO and NORM buttons. Permits triggering on television field signals. A TRIGGER LEVEL control range and auto baseline are the same as in P-P AUTO.

(26) **TRIG'D-READY Indicator**—LED illuminates when either P-P AUTO or NORM Trigger Mode is selected, when the A Sweep has been triggered (TRIG'D). When SGL SWP RESET button is momentarily pressed in, the LED illuminates to indicate that the A Trigger circuit is armed (READY) for a single sweep display.

(27) **A TRIGGER LEVEL Control**—Selects the amplitude point on the trigger signal at which the sweep is triggered.

(28) **SLOPE Switches**—Select the slope of the signal that triggers the sweep.

OUT—When button is released out, sweep is triggered from the positive-going slope of the trigger signal. In WIDTH mode the CTM measures the positive half cycles of the trigger signals.

IN—When button is pressed in, sweep is triggered from the negative-going slope of the trigger signal. In WIDTH mode the CTM measures the negative half cycles of the trigger signals.

(29) **A SOURCE Switch**—Determines the source of the trigger signal that is coupled to the input of the A Trigger circuit.

INT—Permits triggering on signals that are applied to the CH 1 OR X & DMM and CH 2 OR Y input connectors. The source of the internal signal is selected by the A & B INT switch.

LINE—The power-source waveform is the source of the trigger signal. This trigger source is useful when vertical input signals are time related (multiple or submultiple) to the frequency of the power-input source voltage.

EXT—Permits triggering on signals applied to the EXT INPUT connector.

(30) **A & B INT Switch**—Selects the source of the internal triggering signal when the A SOURCE switch is set to INT.

CH 1—The signal applied to the CH 1 OR X & DMM input connector is the source of the trigger signal.

VERT MODE—The internal trigger source is determined by the signals selected for display by the VERTICAL MODE switches. See Table 2-1 for VERT MODE trigger source.

CH 2—The signal applied to the CH 2 OR Y input connector is the source of the trigger signal.

(31) **A EXT COUPLING Switch**—Determines the method used to couple external signals to the A TRIGGER circuit from the EXT INPUT connector.

Table 2-1
VERT MODE Trigger Source

VERTICAL MODE	Trigger Source
CH 1	CH 1 OR X & DMM input signal.
CH 2	CH 2 OR Y input signal.
BOTH and ADD	Algebraic sum of CH 1 OR X & DMM and CH 2 OR Y input signals.
BOTH and CHOP	Algebraic sum of CH 1 OR X & DMM and CH 2 OR Y input signals.
BOTH and ALT	Alternates between Channel 1 and Channel 2 on every other sweep (i.e. CH 1 OR X & DMM input signal triggers the sweep that displays Channel 1, and CH 2 OR Y input signal triggers the sweep that displays Channel 2).

AC—Signals above 60 Hz are capacitively coupled to the input of the A Trigger circuit. Any dc components are blocked, and signals below 60 Hz are attenuated.

DC—All components of the signal are coupled to the input of the A Trigger circuitry. This position is useful for displaying low-frequency or low-repetition-rate signals.

DC÷10—External trigger signals are attenuated by a factor of 10. All components of the signal are coupled to the input of the A Trigger circuit.

(32) **EXT INPUT Connector**—Provides a means of introducing external signals into the A Trigger circuit through the A EXT COUPLING switch.

(33) **B TRIGGER LEVEL Control**—Selects the amplitude point on the trigger signals at which the sweep is triggered. When fully clockwise (B RUNS AFTER DLY), the B Sweep circuit runs immediately following the delay time selected by the A SEC/DIV and the B DELAY TIME POSITION control.

(34) **VAR HOLDOFF Control**—Provides continuous control of holdoff time between sweeps. Increases the holdoff time by at least a factor of 10. This control improves the ability to trigger on aperiodic signals (such as complex digital waveforms).

COUNTER,TIMER, AND MULTIMETER

Refer to Figure 2-7 for location of items 35 through 38.

(35) **UPPER FUNCTIONS-LOWER FUNCTIONS Switch**—Push-push switch that determines which set of CTM functions is activated by the Function Select switches.

(36) **Function Select Switches**—Five button switches along with the UPPER FUNCTIONS-LOWER FUNCTIONS switch select the CTM functions. With all the switch buttons out, the CTM is disabled and the readout is blank.

With the UPPER FUNCTIONS-LOWER FUNCTIONS switch in the IN position the following CTM functions can be selected.

FREQ—Measures the frequency of the trigger signal from the output of the A Trigger circuit (instrument in A HORIZONTAL MODE) or the B Trigger circuit (instrument in ALT or B HORIZONTAL MODE).

PER—Measures the period of the trigger signal from the output of the A Trigger circuit (instrument in A HORIZONTAL MODE) or the B Trigger circuit (instrument in ALT or B HORIZONTAL MODE).

TOTALIZE—Press in both FREQ and PER buttons. Counts trigger events in the A Trigger circuit (instrument in A HORIZONTAL MODE) or the B Trigger circuit (instrument in ALT or B HORIZONTAL MODE). The displayed count can be reset to zero by switching between A and ALT HORIZONTAL MODE or by pressing in momentarily the SGL SWP RESET button.

WIDTH—Measures the width of the trigger signal from the output of the A Trigger circuit (instrument in A HORIZONTAL MODE) or the B Trigger circuit (instrument in ALT or B HORIZONTAL MODE). With the trigger slope switch in positive position, the CTM measures the positive displayed half cycles of the trigger signals; when in negative position the CTM measures the negative displayed half cycles of the trigger signals.

DCV—Measures dc voltage from 0 to 499.9 volts when applied to the Multimeter inputs. The word "OUCH" is displayed if 500 V or more is applied to the Multimeter inputs.

Ω / ⊣▶⊢ (Resistance/Semiconductor)—Measures resistance up to 1.99 G [OHMS] or indicates that the device-under-test is a forward-biased semiconductor when applied to the Multimeter inputs.

With the UPPER FUNCTIONS-LOWER FUNCTIONS switch in the OUT position the following CTM functions can be selected.

Δ TIME—Provides two intensified zones on the crt trace for differential time measurements. The location of the first intensified zone is determined by the B DELAY TIME POSITION control, and location of the second intensified zone is determined by the Δ TIME POSITION control. The time difference between the start of the two intensified zones is displayed on the readout.

DLY TIME—Measures and displays on the readout the time difference between the start of the B Sweep (B DLY'D SWEEP) and the start of the A Sweep in ALT and B HORIZONTAL MODE.

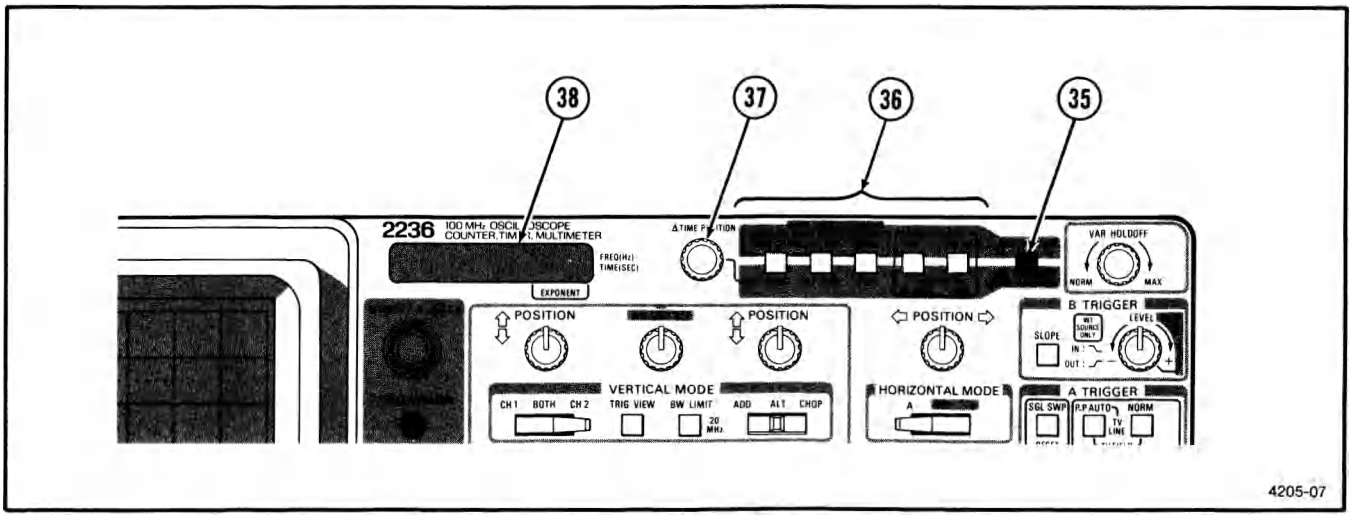

Fig. 2-7. Counter, timer, and multimeter controls and indicator.

CH 1 V—Measures dc voltage or true ac rms voltage signals applied to the CH 1 OR X & DMM vertical input connector. For dc voltage measurements set the Channel 1 Input Coupling switch to DCV position, and for true ac rms voltage measurements set the Channel 1 Input Coupling switch to the AC RMSV position. There is no autoranging; CH 1 VOLTS/DIV switch selects the range for the CTM voltage measurements. The readout will indicate the measuring mode the CTM is in by displaying an "Ac" or "dc" on the left side of the voltage reading. In overrange condition the readout will display the word "OUCH".

In CH 1 V mode, the CTM has the capability of storing a relative reference value, such that the displayed value is the input voltage minus the stored reference value. When either Channel 1 AC RMSV or DCV volts are first entered, the stored reference value is zero, and the Channel 1 input voltage is displayed directly. To set the reference value, press in the SGL SWP RESET button momentarily, and the value on the readout becomes the stored reference value. To regain normal voltage measurement press again the SGL SWP RESET button momentarily or change the CH 1 VOLTS/DIV switch position.

AC RMSV—Measures the true ac rms value of the input signal applied to the Multimeter inputs, from 0 V to 349.9 V rms. The word "OUCH" is displayed if 350 V or more is applied to the Multimeter input connector.

TEMP—Measures temperature in degrees Celsius °C when the TEMP button is pressed in, or degrees Fahrenheit °F when both TEMP and Δ TIME buttons are pressed in. Temperature readings following by °C or °F are displayed on the CTM readout.

<5Ω (Continuity)—Press in both AC RMSV and TEMP buttons for continuity measurements. For resistance readings below 5.0 Ω the word "Short" is displayed and an audible tone will be generated. For resistance readings greater than or equal to 5.0 Ω, the word "OPEN" is displayed.

Self Test Routine—The CTM can be entered into a Self Test routine by setting the UPPER FUNCTIONS-LOWER FUNCTIONS switch to IN and pressing in the FREQ, PER, and WIDTH buttons at the same time. The message "SELF tESt" will be displayed on the readout to indicate that the routine is in self test mode. To exit from the routine press in any of the CTM front panel buttons to regain normal measurement mode. Repeated pressing of the SGL SWP RESET button will cause the CTM to advance through the test menu. To exit from the test menu, keep pressing the SGL SWP RESET button until "End S-t" message is displayed on the readout. Then exit from the Self Test routine by pressing in any one of the CTM front panel buttons. Self Test routine should normally be performed by a qualified service personnal.

(37) **Δ TIME POSITION Control**—Used in conjunction with the B DELAY TIME POSITION control in Δ TIME mode. The control determines the time difference between the starts of the two intensified zones.

(38) **Readout**—Consists of a nine-digit vacuum fluorescent unit which is used to display measurements selected by the CTM. No polarity indication is displayed for positive values. Negative polarity indication is automatic for negative values. In Counter and Timer modes the decimal point is always placed in one of the three most-significant digits, and the exponent is always an integer multiple of 3. Resistance measurements are also displayed with an exponent. All frequency measurements are in Hertz, and time measurements are in seconds.

RIGHT-SIDE PANEL

Refer to Figure 2-8 for location of item 39.

(39) **Multimeter Connectors**—Two banana like jacks provide positive (red) and negative (black) inputs for voltages, resistance, and temperature measurements.

REAR PANEL

Refer to Figure 2-9 for location of item 40.

(40) **EXT Z-AXIS Connector**—Provides a means of connecting external signals to the Z-axis amplifier to intensity modulate the crt. Applied signals do not affect display waveshape. Signals with fast rise times and fall times provide the most abrupt intensity change, and a 5-V p-p signal will produce noticeable modulation. The Z-axis signals must be time-related to the display to obtain a stable presentation on the crt.

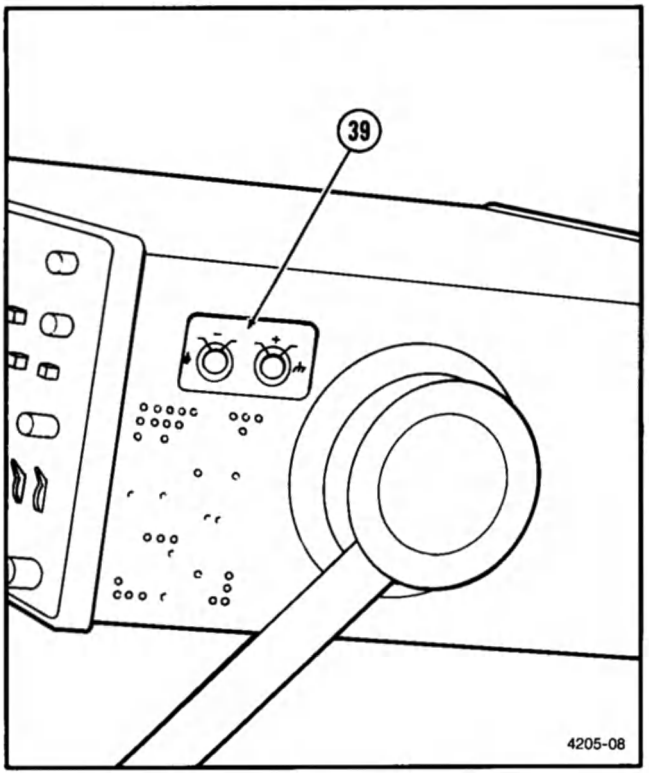

Fig. 2-8. Multimeter right side panel connectors.

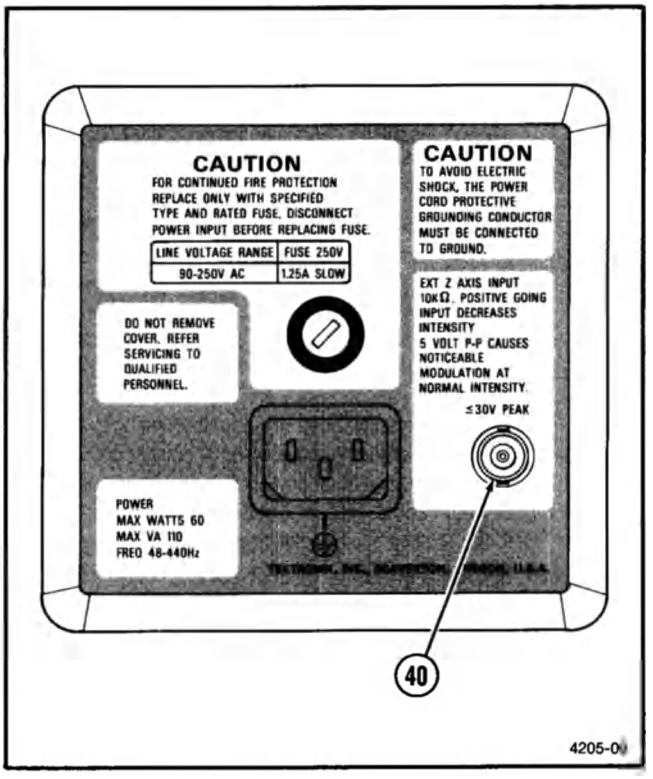

Fig. 2-9. Rear-panel connector.

OPERATING CONSIDERATIONS

GRATICULE

The graticule is internally marked on the faceplate of the crt to enable accurate measurements without parallax error (see Figure 2-10). It is marked with eight vertical and ten horizontal major divisions. Each major division is divided into five subdivisions. The vertical deflection factors and horizontal timing are calibrated to the graticule so that accurate measurements can be made directly from the crt. Also, percentage markers for the measurement of rise and fall times are located on the left side of the graticule.

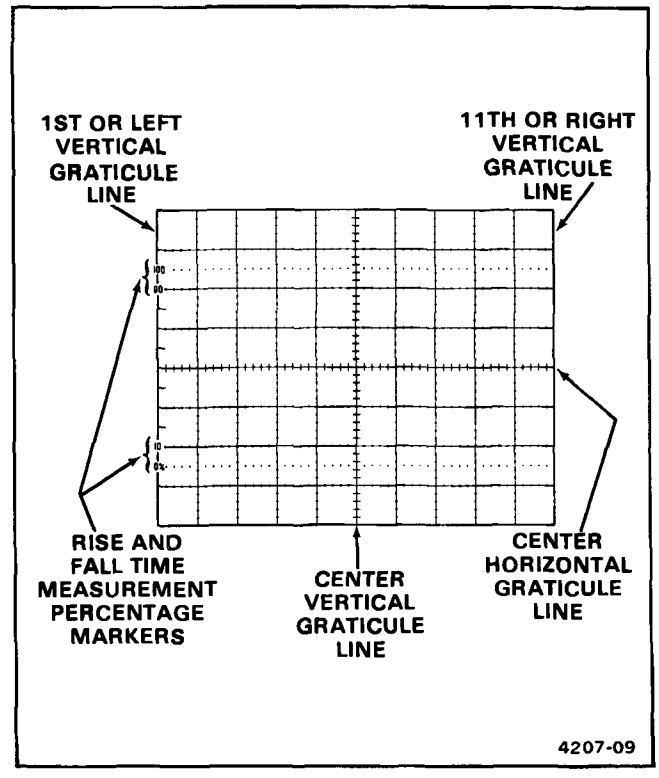

Fig. 2-10. Graticule measurement markings.

GROUNDING

The most reliable signal measurements are made when the 2236 and the unit under test are connected by a common reference (ground lead), in addition to the signal lead or probe. The probe's ground lead provides the best grounding method for signal interconnection and ensures the maximum amount of signal-lead shielding in the probe cable. A separate ground lead can also be connected from the unit under test to the oscilloscope GND connector located on the front panel.

For floating Multimeter measurements the −(negative) connector (located on the right side panel) should be connected to the lower impedance point of the unit-under-test being measured, to minimize loading.

SIGNAL CONNECTIONS

Generally, probes offer the most convenient means of connecting an input signal to the instrument. They are shielded to prevent pickup of electromagnetic interference, and the supplied 10X probe offers a high input impedance that minimizes circuit loading. This allows the circuit under test to operate with a minimum of change from its normal condition as measurements are being made.

Coaxial cables may also be used to connect signals to the input connectors, but they may have considerable effect on the accuracy of a displayed waveform. To maintain the original frequency characteristics of an applied signal, only high-quality, low-loss coaxial cables should be used. Coaxial cables should be terminated at both ends in their characteristic impedance. If this is not possible, use suitable impedance-matching devices.

INPUT COUPLING CAPACITOR PRECHARGING

When the Input Coupling switch is set to GND, the input signal is connected to ground through the input coupling capacitor in series with a 1-MΩ resistor to form a precharging network. This network allows the input coupling capacitor to charge to the average dc-voltage level of the signal applied to the probe. Thus any large voltage transients that may accidentally be generated will not be applied to the amplifier input when the Input Coupling switch is moved from GND to AC. The precharging network also provides a measure of protection to the external circuitry by reducing the current levels that can be drawn from the external circuitry during capacitor charging.

The following procedure should be used whenever the probe tip is connected to a signal source having a different

dc level than that previously applied, especially if the dc-level difference is more than 10 times the VOLTS/DIV switch setting:

1. Set the Input Coupling switch to GND.

2. Insert the probe tip into the oscilloscope GND connector and wait several seconds for the input coupling capacitor to discharge.

3. Connect the probe tip to the signal source and wait several seconds for the input coupling capacitor to charge.

4. Set the Input Coupling switch to AC. The display will remain on the screen, and the ac component of the signal can be measured in the normal manner.

POWER-UP CHECKS

The Counter, Timer, and Multimeter (CTM) contains Power-Up Checks that are performed each time the instrument is turned on. These checks consists of ROM, Counter, and DMM in this order. Each of these checks must pass before proceeding to the next check. If a check fails, an error message will appear in the readout (see Table 2-2). Refer the error message to qualified service personnel.

TABLE 2-2
Power-Up Checks

Check	Error Message
ROM	FAIL-ro
Counter	FAIL-ctr
DMM	FAIL-d

CTM MEASUREMENT CONSIDERATIONS

Nongated measurements are performed from the A Trigger system on signals selected by the A Trigger source switches. Signals may be applied through the CH 1 input, CH 2, or the EXT INPUT connectors. Nongated measurements may also be performed on the instrument power source by setting the A SOURCE switch to LINE position. The A TRIGGER LEVEL control, A TRIGGER Mode, A TRIGGER SLOPE, A&B INT, A SOURCE, A EXT COUPLING, and BW LIMIT switches are effective in conditioning the input signal.

Trigger status messages ("no A trig" and "no b trig") are not displayed in any mode of the width function so that measurement results can be displayed indefinitely. This allows single pulse measurements.

Gated measurements are performed from the B Trigger system on input signals being applied to either CH 1, or CH 2 input connectors. The gate interval (set by adjusting the intensified zone with the B DELAY TIME POSITION control and the B SEC/DIV switch) must be shorter than the A Sweep duration, such that the intensified zone ends before A Sweep ends. The A TRIGGER A&B INT switch and the B TRIGGER LEVEL control and SLOPE switch are effective in conditioning the input signal.

Noise may be coupled to the A and B Trigger circuits along with the signal to be measured. Noise may originate from the operating environment, the signal source, or by improper connections. If the noise is of sufficient amplitude, it can result in inaccurate measurements due to false triggering. The 2236 has a 20 MHz Bandwidth Limiter that is helpful in removing or reducing the noise in the A and B Trigger systems.

Channel 1 volts measurements should be made with the signal fully displayed within the graticule area through the appropriate use of the CH 1 VOLTS/DIV switch and CH 1 VOLTS/DIV Variable control. This prevents the Channel 1 input circuit from being overdriven and distorting the voltage measurements.

STATUS AND ERROR MESSAGES

The Counter, Timer, and Multimeter (CTM) system will display several types of status and error messages on the readout.

Control button Error—When the buttons are in an illegal mode, the readout will display "Control button Error" by scrolling it across the readout. The error message will repeat itself until a correction is made.

O'FLO—When measuring the width of an input signal that exceeds five seconds in duration, the overflow message "O'FLO" will be displayed on the readout.

no ALT H—With the instrument in A HORIZONTAL MODE (non-delay), the readout will display a "no ALt H" when either the Δ TIME or DLY TIME mode is selected.

no A trig—With the Δ TIME mode and either the ALT or B HORIZONTAL MODE selected, the readout will display "no A trig" when either the A Sweep is not running, or is too slow. This message is also displayed with the instrument in A HORIZONTAL MODE and either the FREQ or PER mode selected, and the CTM is not receiving a trigger signal.

no b trig—When either the Δ TIME or DLY TIME mode and either ALT or B HORIZONTAL MODE is selected with the A Sweep triggered and the B Trigger circuit not receiving a trigger signal in delay mode, the readout will display "no b trig". This message is also displayed with the instrument in either ALT or B HORIZONTAL MODE and either the FREQ or PER mode selected, and the CTM is not receiving a trigger signal.

OPEN—The readout will display "OPEN" with the CTM in either Ohms or Continuity mode (AC RMSV and TEMP buttons pressed in) under the following conditions; in Ω mode one or both test leads disconnected or when resistance exceeds 1.99 GΩ, in Continuity mode when the resistance equals or exceeds 5.0 Ω.

diodE—In Resistance/Semiconductor mode the readout will momentarily display "diodE", and an audible tone will be generated if the device being measured is a forward-biased semiconductor junction. After approximately one second, it will display the forward voltage drop of the device.

Fd—In Resistance/Semiconductor mode "Fd" will be displayed on the left side of the readout to indicate that a forward voltage drop is being displayed.

Probe-?—When the temperature probe exceeds its internal resistance limits the readout will display "ProbE-?" to indicate that the temperature probe is either faulty or disconnected from the Multimeter input connectors.

Short—In Continuity mode the readout will display "Short" when the measured resistance is less than 5.0 Ω.

OUCH—The word "OUCH" is displayed when the input voltage to the multimeter inputs is 500 volts or more in DCV mode, and 350 volts or more in AC RMSV mode. In CH 1 V mode, the word "OUCH" is displayed if overranged.

dc—In CH 1 V mode with Channel 1 Input Coupling switch in GND or DCV position, "dc" will be displayed on the left side of the readout.

Ac—In CH 1 V mode with Channel 1 Input Coupling switch in AC RMSV position, "Ac" will be displayed on the left side of the readout.

r—In CH 1 V Relative Reference mode, "r" will be displayed on the right side of the readout.

no dELTA—When in Δ TIME mode with the measurement intensified zone (moved by rotating the Δ TIME position control) dialed off the right end of the trace, the readout will display "no dELTA".

OPERATOR'S ADJUSTMENTS

INTRODUCTION

To verify the operation and accuracy of your instrument before making measurements, perform the following adjustment procedures. Adjustments beyond the scope of "Operator's Adjustments" are in the "Adjustment Procedure," Section 5 of this manual.

Before proceeding with these instructions, refer to "Preparation for Use" in this section for first-time start-up considerations.

Verify that the POWER switch is OFF (button out), then plug the power cord into the power-source outlet.

BASELINE TRACE

First obtain a baseline trace, using the following procedure.

1. Preset the instrument front-panel controls as follows:

Display

A and B INTENSITY	Fully counterclockwise
FOCUS	Midrange

Vertical (Both Channels)

POSITION	Midrange
VERTICAL MODE	CH 1
BW LIMIT	Off (button out)
VOLTS/DIV	50 mV
VOLTS/DIV Variable	CAL detent
INVERT	Off (button out)
Input Coupling	AC

Horizontal

A/B SWP SEP	Off midrange
POSITION	Midrange
HORIZONTAL MODE	A
A and B SEC/DIV	0.5 ms
SEC/DIV Variable	CAL detent
X10 Magnifier	Off (knob in)
B DELAY TIME POSITION	Fully counterclockwise

B TRIGGER

SLOPE	OUT
LEVEL	Fully clockwise

A TRIGGER

VAR HOLDOFF	NORM
Mode	P-P AUTO
SLOPE	OUT
LEVEL	Midrange
A&B INT	VERT MODE
A SOURCE	INT
A EXT COUPLING	AC

CTM

UPPER FUNCTIONS- LOWER FUNCTIONS	OUT
Function Select	All buttons out
Δ TIME POSITION	Midrange

2. Press in the POWER switch button (ON) and allow the instrument to warm up (20 minutes is recommended for maximum accuracy).

3. Adjust the A INTENSITY control for desired display brightness.

4. Adjust the Vertical and Horizontal POSITION controls as needed to center the trace on the screen.

TRACE ROTATION

Normally, the resulting trace will be parallel to the center horizontal graticule line, and the Trace Rotation adjustment should not be required. If adjustment is needed, perform the following procedure:

1. Preset instrument controls and obtain a baseline trace.

2. Use the Channel 1 POSITION control to move the baseline trace to the center horizontal graticule line.

3. If the resulting trace is not parallel to the center horizontal graticule line, use small flat-bit screwdriver to adjust the TRACE ROTATION control and align the trace with the center horizontal graticule line.

PROBE COMPENSATION

Channel 1 and Channel 2

Misadjustment of probe compensation is one of the source of measurement error. Most attenuator probes are equipped with a compensation adjustment. To ensure optimum measurement accuracy, always compensate the oscilloscope probes before making measurements. Probe compensation is accomplished as follows:

1. Preset instrument controls and obtain a baseline trace.

2. Connect the two 10X probes (supplied with the instrument) to the CH 1 and CH 2 input connectors.

2. Connect the two 10X probes (supplied with the instrument) to the CH 1 and CH 2 input connectors.

3. Set both VOLTS/DIV switches to 10 mV and set both Input Coupling switches to AC.

4. Select CH 2 VERTICAL MODE and insert the tip of the Channel 2 probe into the PROBE ADJUST output jack.

5. Using the approximately 1-kHz PROBE ADJUST square-wave signal as the input, obtain a 5-division display of the signal.

6. Set the A SEC/DIV switch to display several cycles of the PROBE ADJUST signal. use the Channel 2 POSITION control to vertically center the display.

7. Check the waveform presentation for overshoot and rolloff (see Figure 2-11). If necessary, adjust the probe compensation for flat tops on the waveforms. Refer to the instructions supplied with the probe for details of compensation adjustment.

8. Select CH 1 VERTICAL MODE and connect the Channel 1 probe tip to the PROBE ADJUST output jack.

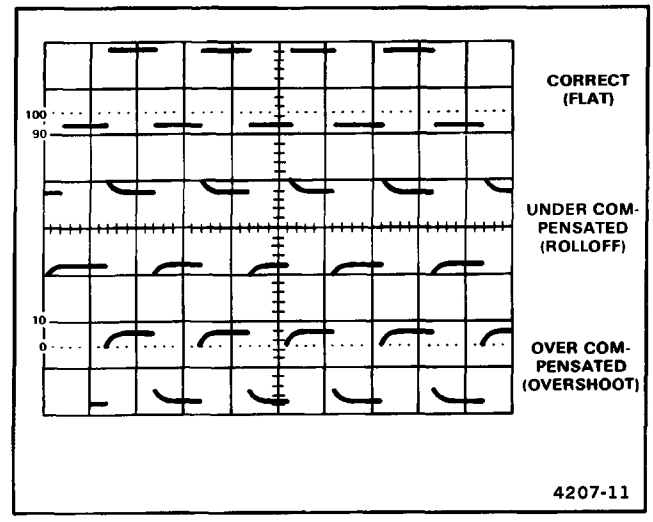

Fig. 2-11. Probe compensation.

9. Use the Channel 1 POSITION to vertically center the display and repeat step 7 for the Channel 2 probe.

NOTE

Channel 1 ac rms volts measurement accuracy above 1kHz depends directly upon the precision with which the preceding adjustment is performed. An overshoot of 0.2 division (or 4% of a 5-division display) will add approximately 4% to the displayed reading. Compensation related errors can be reduced to 1/2% or less by carefully adjusting the probe compensation to the PROBE ADJUST square-wave signal.

Channel 1 AC RMSV

Best measurement accuracy above 1 kHz with a 10X probe can be accomplished by adjusting the probe with the aid of a precision Ac Calibration System. Probe compensation is accomplished as follows:

The equipment listed in Table 2-3, or equivalent equipment, is required to compensate the 10X probe for ac rms volts measurement.

Table 2-3
Equipment Required for 10X Probe Compensation

Description	Minimum Specification
AC Calibration System	Ac voltage: 400 mV to 4 V. Voltage accuracy: 0.01%. Frequency: 10 kHz.
Cable	Impedance: 50 Ω. Length: 42 inch. Connectors: BNC.
Adapter	Connectors: BNC-male-to-miniature probe tip.

1. Preset instrument controls and obtain a baseline trace, set CH 1 VOLTS/DIV switch to 50 mV, and Channel 1 Input Coupling switch to AC RMSV.

2. Connect the AC Calibration System output via a 50-Ω cable to CH 1 OR X & DMM input connector.

3. Adjust the generator output to produce a 400 mV, 10 kHz display. Vertically center the display.

4. Set UPPER FUNCTIONS-LOWER FUNCTIONS switch to OUT and press in the CH 1 V button.

5. Note the ac voltage display on the readout for future comparison in step 8.

6. Replace the 50-Ω cable with the 10X probe and probe-tip-to BNC adapter.

7. Adjust the generator output signal to 4 volts.

8. Adjust the probe compensation for 10 times the ac voltage display on the readout in step 5.

THEORY OF OPERATION

INTRODUCTION

SECTION ORGANIZATION

This section of the manual contains a general summary of instrument functions followed by a detailed description of each major circuit. The basic block diagrams, detailed block diagrams, and schematic diagrams are located in the tabbed "Diagrams" section at the back of this manual. They are used to show the interconnections between parts of the circuitry, to indicate circuit components, and to identify interrelationships with the front-panel controls.

The schematic diagram number associated with each description is identified in the text and is shown on the block diagrams. For best understanding of the circuit being described, refer to the appropriate schematic diagram and the two block diagrams.

INTEGRATED CIRCUIT DESCRIPTIONS

Digital Logic Conventions

Digital logic circuits perform many functions within the instrument. Functions and operation of the logic circuits are represented by logic symbology and terminology. Most logic functions are described using the positive-logic convention. Positive logic is a system of notation whereby the more positive of two levels is the TRUE (or 1) state; the more negative level is the FALSE (or 0) state. In this logic description the TRUE state is referred to as HI, and the FALSE state is referred to as LO. The specific voltages which constitute a HI or a LO state vary between specific devices. For specific device characteristics, refer to the manufacturer's data book.

Linear Devices

The functioning of individual linear circuit devices in this section use waveforms or other techniques such as voltage measurement and simplified diagrams to illustrate their operation.

GENERAL DESCRIPTION

NOTE

When reading this general circuit description of the 2236 Oscilloscope, refer to the block diagrams (Figures 9-4 through 9-7) located in the "Diagrams" section of this manual. The numbered diamond symbol in each major block refers to the appropriate schematic diagram number.

OSCILLOSCOPE

Signals to be displayed on the crt are applied to either the CH 1 OR X input connector or the CH 2 OR Y input connector. These signals may be directly (DC) coupled to the attenuator circuit or ac (AC) coupled through an input-coupling capacitor. The input signals may also be disconnected from the oscilloscope circuitry and the input attenuator grounded by setting the coupling switch to the GND position.

The output signal from the Attenuator circuit is applied to the Vertical Preamplifier for further amplification. Additionally, the Channel 2 Attenuator can invert the Channel 2 display on the crt. Trigger Pickoff Amplifiers in each channel supply an internal trigger signal from either or both channels to the Internal Trigger Amplifier.

Input signals are selected for display by the Channel Switching circuit under control of the front-panel VERTICAL MODE switches. The output signal from the Channel Switching circuit is applied to a Diode Gate circuit to enable either the vertical or trigger view signal to drive the Delay Line Driver stage. This stage converts a current input to a voltage output and provides an impedance match for the Delay Line. The Delay Line produces approximately 90 ns of delay in the vertical signal. This allows the Horizontal circuitry time to start the sweep so that the operator can see the signal that triggered the sweep.

Final amplification of the vertical signal is performed by the Vertical Output Amplifier. This Amplifier supplies the signal levels necessary for vertical deflection of the electron beam in the crt. The upper frequency response of the Amplifier can be reduced by enabling the Bandwidth Limit circuitry. For locating the position of off-screen displays, the dynamic range of the Amplifier can be limited with the Beam Find circuitry. This circuitry also intensifies the trace and limits horizontal deflection.

The A/B Sweep Separation circuitry supplies a dc-offset current to the Vertical Output Amplifier which vertically positions the B trace with respect to the A trace when Alt Horizontal Mode is selected.

The A Trigger circuitry uses either an Internal Trigger signal, an External Trigger signal, or a Line Trigger signal obtained from the ac power line to develop the gate signal for the A Sweep Generator. The B Trigger circuitry uses only the Internal Trigger signal to gate the B Sweep Generator. A P-P Auto Trigger circuit ensures that the range of the A TRIGGER LEVEL control tracks the peak-to-peak amplitude of the trigger signal when either the P-P Auto or TV Field trigger mode is selected. This allows triggering on most signals without needing to adjust the A TRIGGER LEVEL control. In Norm Mode, the A TRIGGER LEVEL control must be adjusted for the correct trigger signal level before a sweep can be generated. When the TRIG VIEW switch is activated, the signal appearing at the input of the A Trigger circuit is applied to the Delay Line Driver and displayed on the crt.

A TV Field sync circuit provides stable triggering on television vertical-sync pulses. Triggering at the television line rate is accomplished when either P-P Auto or Norm mode is selected.

The A Sweep Logic circuit controls sweep generation and Z-Axis unblanking for the A Sweep display. When the A TRIGGER Mode switches are set to either P-P AUTO or TV FIELD and no trigger signal is present, the Auto Baseline circuit causes the Sweep Logic circuit to produce a sweep for reference purposes. In the NORM setting, the Auto Baseline circuit is disabled and sweeps are inhibited until a trigger event occurs. This is useful for triggering on low-repetition-rate signals. The SGL SWP setting enables only one sweep to be generated after being reset. Following the single sweep, the A Trigger circuit is disabled until the SGL SWP button is pressed again.

The A Sweep Logic circuit controls the operation of the A Miller Sweep Generator circuit. The Sweep circuit produces a linear sweep output with a ramp time that is controlled by the A SEC/DIV switch. The sweep signal is applied to the Horizontal Preamplifier for initial amplification and then to the Horizontal Output Amplifier to drive the crt horizontal deflection plates.

The Horizontal Preamplifier gain is increased by a factor of 10 when the X10 Magnifier is used. Horizontal positioning of the display is accomplished in the Horizontal Preamplifier circuit.

In the X-Y Mode of operation, the Channel 1 signal from the Internal Trigger circuitry passes through the X-Y Amplifier to the Horizontal Preamplifier. In this operating mode, the Channel 1 Internal Trigger signal supplies the horizontal deflection to the crt, and the Miller Sweep circuit is disabled to inhibit sweep generation.

The Alternate B Sweep circuitry controls the Alt and B Horizontal mode displays and includes the B Miller Sweep Generator and B Sweep Logic circuitry. In addition to providing the B Sweep sawtooth waveform, signals are generated which control the display switching between the A and B displays.

The intensity levels of both the A and B Sweeps are set by the front-panel A and B INTENSITY controls. These controls, along with signals from the A and B Sweep Logic circuits, determine the drive level to the Z-Axis Amplifier.

The Z-Axis drive from both the A Sweep Logic circuit and the Alternate B Sweep circuit is applied to the Z-Axis Amplifier. The output signal from the Z-Axis Amplifier circuit sets the crt intensity. When using Chop Vertical Mode, a blanking signal from the Chop Oscillator circuit blanks the crt display while switching between the vertical channels.

The Dc Restorer circuit applies the output voltage of the Z-Axis Amplifier between the cathode and grid of the crt. High dc potentials on these elements prohibit direct coupling to the crt.

The Power Supply provides the necessary operating voltages for the instrument. Operating potentials are obtained from a circuit composed of the Preregulator, Inverter and Transformer, and Rectifiers and Filters. The Preregulator produces approximately +43 V dc from the ac power line which is used to drive the 20-kHz Inverter stage. The transformer secondary windings provide various ac levels that are rectified and filtered to produce the operating voltages. A high-voltage multiplier circuit produces the accelerating, focus, and cathode potentials required by the crt.

A front-panel PROBE ADJUST output is provided for use in adjusting probe compensation. The voltage at the PROBE ADJUST connector is a negative-going square wave that has a peak-to-peak amplitude of approximately 0.5 V and a repetition rate of approximately 1 kHz.

CTM

The CTM (Counter-Timer-Multimeter) section of the 2236 Oscilloscope utilizes input signals from the three front-panel BNC connectors, the DMM leads, or the temperature probe to calculate and display CTM parameter results. Measurements which are a function of time use additional control signals from the oscilloscope.

The central processor unit (CPU) circuitry monitors the front-panel switches, drives the display circuitry, and performs calculations on data from the counter. Through read ports, the CPU accesses counter data and oscilloscope control signals. Write ports are used to transmit controlling signals to the DMM.

The Counter section utilizes two counters, the oscilloscope and CPU control signals, and the crystal oscillator frequency to produce data for CPU calculations. One part produces a count proportional to an input signal and the other part totalizes the number of cycles of the phase-locked loop frequency for that same time period.

Input switching circuitry in the DMM front end selects the input signal source for the particular function chosen by the operator. This input signal is processed into a dc voltage which, along with a precision reference voltage and a ground reference, is applied to a voltage-to-frequency converter. The converter then produces a proportional frequency output for use by the Counter section as a data source. The processing and converter circuitry are all under microprocessor control. DMM circuitry is powered by a floating power supply to provide circuitry isolation and to allow nonground-referenced measurements.

DETAILED CIRCUIT DESCRIPTION

The detailed circuit description contains two parts. The first part describes the conventional oscilloscope operation and the second contains the operation of the counter-timer-multimeter circuitry.

OSCILLOSCOPE

The oscilloscope part of the 2236 Oscilloscope functions as a conventional oscilloscope. In addition, signals are produced by the circuitry for use by the CTM when making front-panel voltage and timing measurements.

VERTICAL ATTENUATORS

The Channel 1 and Channel 2 Attenuator circuits, shown on Diagram 1, are identical with the exception of the additional Invert circuitry in the Channel 2 Paraphase Amplifier. Therefore, only the Channel 1 Attenuator will be described and the Invert circuitry of Channel 2 will be discussed separately.

The Attenuator circuit (see Figure 3-1) provides control of input coupling, vertical deflection factor, and variable volts-per-division gain. Input signals for crt vertical deflection may be connected to the CH 1 OR X and the CH 2 OR Y input connectors. In the X-Y Mode of operation, the signal applied to the CH 1 OR X connector provides horizontal (X-Axis) deflection for the display, and the signal applied to the CH 2 OR Y connector provides the vertical (Y-Axis) deflection for the display.

Input Coupling

The signal applied to the CH 1 OR X input connector can be ac coupled, dc coupled, or disconnected from the input of the High-Impedance Input Attenuator circuit. Signals applied to the CH 1 OR X input connector are routed through resistor R9100 to Input Coupling switch S1. When S1 is set for dc coupling, the Channel 1 signal is applied directly to the input of the High-Impedance Attenuator stage. When ac coupled, the input signal passes through dc-blocking capacitor C2. The blocking capacitor prevents the dc component of the input signal from being applied to the Attenuator circuit. When switched into the signal path, attenuators AT1 and AT2 attenuate the input signal by factors of 100 and 10 respectively. When S1 is set to GND, the direct signal path is opened and the input of the Buffer Amplifier is connected to ground. This provides a ground reference without the need to disconnect the applied signal from the input connector. The coupling capacitor precharges through R4 to prevent large trace shifts when switching from GND to AC.

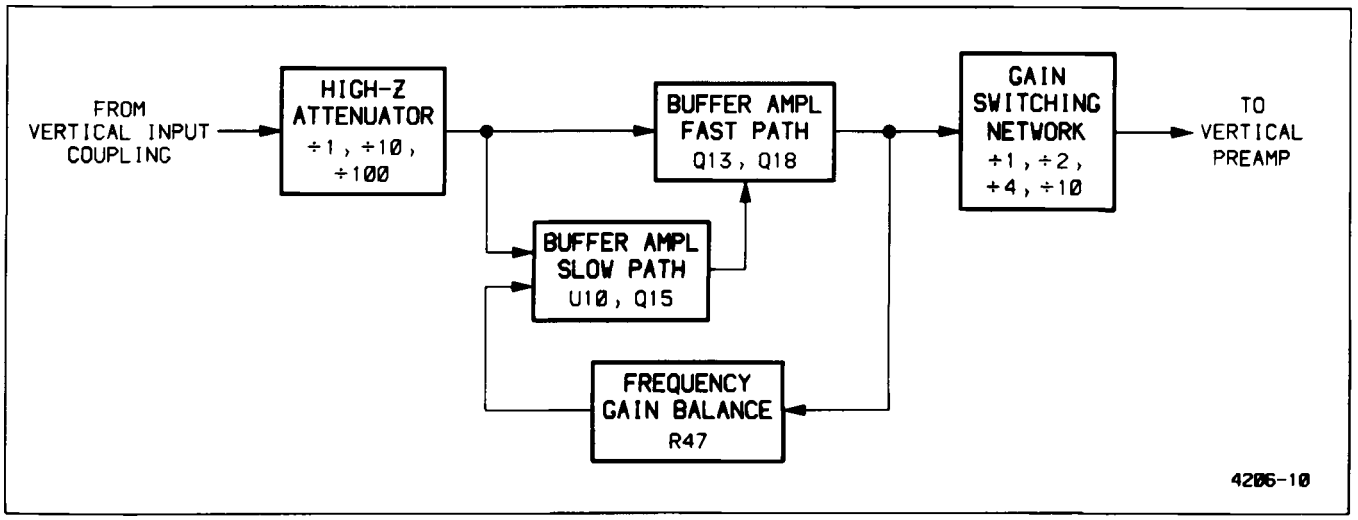

Figure 3-1. Block diagram of the Vertical Attenuators.

A probe coding ring on the CH 1 OR X & DMM input connector is used by the CTM Probe Decoder circuit. See the "Oscilloscope Read Port and Probe Decoder" part of the "CTM" section. Section 3 of switch S1 is used by the DMM to indicate that the AC RMSV input coupling position of the Channel 1 Input Coupling switch is selected.

Buffer Amplifier and Gain Switching Network

The Buffer Amplifier presents a high-impedance, low-capacitance load to the signal from the High-Impedance Attenuator and a low output impedance to the Gain Switching Network. A dual-path amplifier is used to combine high-dc stability with high-speed performance.

In the slow path, the input signal is applied to both the gate of source-follower Q13 and the inverting input of U10 through the divide-by-two network composed of R3 and R5. Transistor Q13 and emitter-follower Q18 isolate the input signal from the loading of the Gain Switching Network. The divider network at the output of the Amplifier (R46, R47, and R48) is connected to the other input of U10. Amplifier U10 compares the two divider voltages and changes the conduction level of current-source transistor Q15 to correct for any error at the source of Q13. Capacitor C10 limits the bandwidth of U10 so that the slow path responds only to frequencies below 100 kHz.

In the fast path, input signals are coupled through R6, C6, Q13, and Q18 to the circuit output. By adjusting R47, the gain in both paths is matched. Input offset voltage compensation for U10 is provided by R10 to eliminate trace shifts when switching between VOLTS/DIV switch settings.

The emitter signal of Q18 provides the DMM with the Ch 1 signal for Channel 1 Ac and Dc voltage measurements.

The Gain Switching Network divides down the Buffer Amplifier output signal for application to the Paraphase Amplifier and has an output impedance of 75 ohms for all VOLTS/DIV switch settings. The particular VOLTS/DIV switch setting will determine which contacts of S10 are closed and therefore whether the Paraphase Amplifier will receive a ÷ 1, ÷ 2, ÷ 4, or ÷ 10 signal. Two sections of S10 are also used to indicate to the DMM which CH 1 VOLTS/DIV switch setting is used for scaling purposes of the input signal.

Paraphase Amplifier

The Paraphase Amplifier converts the single-ended signal from the Gain Switching Network into a differential signal for application to the Vertical Preamplifier. Included in the circuitry is switching that provides extra gain for the 2 mV position of the VOLTS/DIV switch, adjustments for amplifier dc balance, and circuitry for the Variable Volts/Div function. Additionally, the Channel 2 Paraphase Amplifier contains circuitry to invert the Channel 2 display.

The signal from the Gain Switching Network is applied to the base of one transistor in U30. The other input transistor is biased by the divider network composed of R30, R31, and R33 to a level that will produce a null between the outputs of U30 (no trace shift on the crt screen) when the VOLTS/DIV control is switched between 5 mV and 2 mV. Emitter current for the two input transistors is supplied by R21, R22, R23, and R25, with R29 serving as the gain-setting resistor between the two emitters. In the 2 mV position, amplifier gain is increased by closing contact 15 of S10 to shunt R29 with R26.

The collector current through the two input transistors serves as emitter current for the two differential output transistor pairs. Base-bias voltages for the two pairs are derived from the divider network composed of R39, R41, R42, and R43. Monolithic IC U30 has matched transistor characteristics, so the ratio of currents in the two diodes connected to pin 11 determines the current ratios in the output transistor pairs. As VOLTS/DIV Variable potentiometer R43 is rotated from the calibrated to uncalibrated position, the conduction level of the transistors connected to R35 will increase. Since the transistor pair outputs are cross-wired, this increased conduction will subtract from the signal produced by the transistors connected to R38 and the overall gain of the Amplifier will decrease. Potentiometer R25 adjusts the balance of the Amplifier so there is minimal dc trace shift as the VOLTS/DIV Variable control is rotated.

Incorporated in the Channel 2 Paraphase Amplifier is circuitry to invert the polarity of the Channel 2 signal. When INVERT switch S90 is out, the transistor pairs in U80 are biased as they are in U30 and there is no trace inversion. For the IN position of S90, connections to the bases of the output transistor pairs are reversed to produce an inverted Channel 2 trace. Potentiometer R75 is adjusted so that there is minimal dc trace shift as the INVERT button is changed between the IN and OUT positions.

VERTICAL PREAMPLIFIERS

The Vertical Preamplifier, shown on Diagram 2, utilizes differential signal current from the Paraphase Amplifier to produce differential output current to drive the Delay Line Driver. Internal trigger signals for the Trigger circuitry are picked-off and channel selection for the crt display is controlled by the Channel Switch circuitry.

Common-base transistors Q102 and Q103 convert differential current from the Paraphase Amplifier into level-shifted voltages that drive the bases of the input transistors of U130 and the Internal Trigger circuitry. Emitter current for the input transistors is supplied by Q114 and Q115, and the base bias is adjusted by R111. The collector current of each input transistor of U130 serves as emitter current for two differential output transistor pairs. One of the collectors of each output pair is grounded and the other provides output drive to the Delay Line Driver. The base voltages of the transistors with grounded collectors are held at ground potential by R136. The base voltages of the other transistors are controlled by the Channel Switch and Trigger View circuitry.

When Channel 1 is selected to drive the Delay Line Driver, the Q output of U540A is HI. The transistors with the ungrounded collectors will then be forward-biased and the Channel 1 signal will be conducted through to the Delay Line Driver. If Channel 1 is not selected, then the Q output of U540A is LO. The transistors with the ungrounded collectors are then reverse-biased and the output signals will be conducted to ground by the other transistor pair. The gain of the Preamplifier is set by adjusting R145 to determine how much signal current will be shunted between the two differential outputs.

When TRIG VIEW push button S200 is pressed in, -8.6 V is applied to R138 and R188 to turn off the transistors in U130 and U180 with ungrounded collectors. Both the Channel 1 and Channel 2 output signals are then conducted to ground. Zener diode VR200 turns on and CR200 and CR201 become reverse biased. Trigger View transistors Q440 and Q441 are then coupled to the Delay Line Driver through forward-biased diodes CR202 and CR203. The crt trace will then be a display of the A Trigger signal.

CHANNEL SWITCH AND VERTICAL OUTPUT

The Channel Switch circuitry, shown on Diagram 2, utilizes the front-panel VERTICAL MODE switches to select the crt display format. See Figure 3-2 for a block diagram of the circuit.

When any display mode other than X-Y is selected, the XY line connected to S550 is at ground potential. VERTICAL MODE switches S545 and S550 control the connection between the XY line and the $\overline{S}$ and $\overline{R}$ inputs of U540A to obtain the various display formats described below.

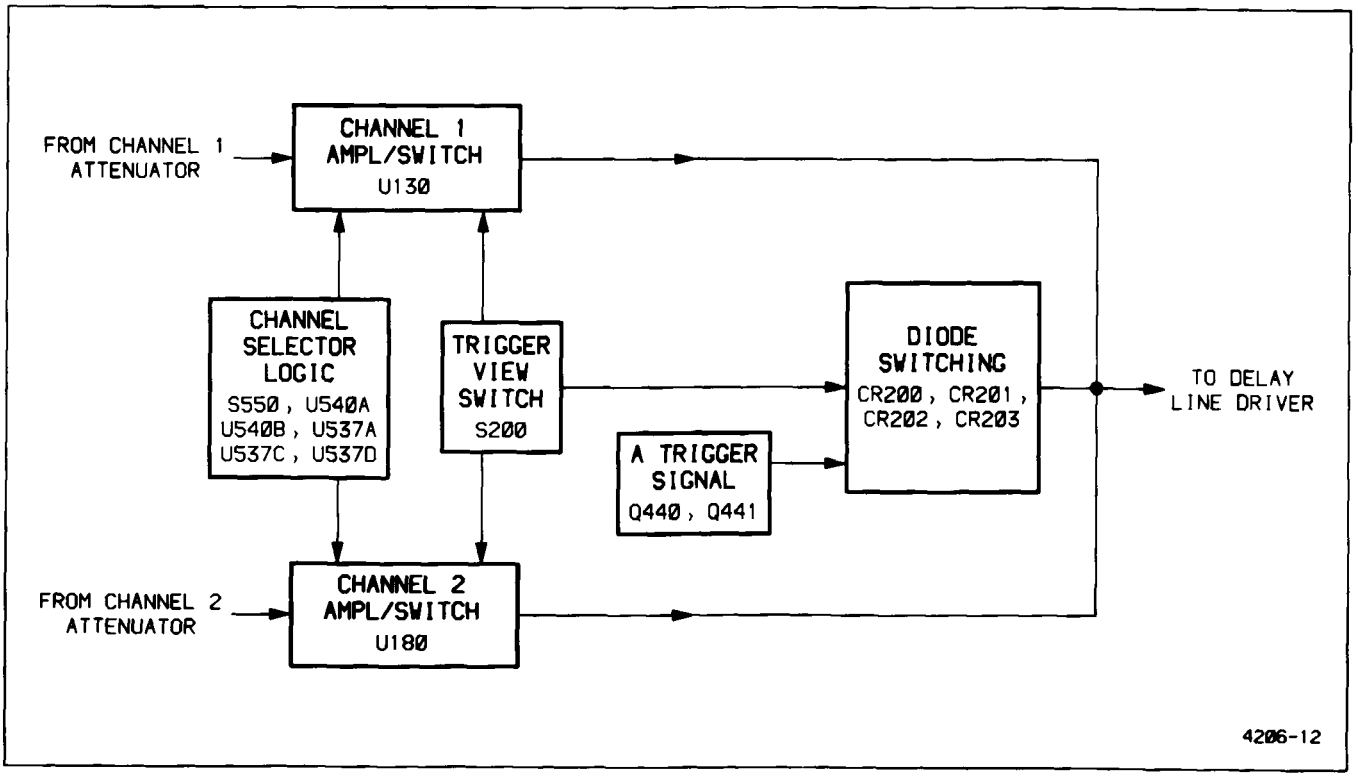

Figure 3-2. Block diagram of the Channel Switching circuitry.

CHANNEL 1 DISPLAY ONLY. The CH 1 position of S550 grounds the $\overline{S}$ input of U540A while the $\overline{R}$ input is held HI by R539. This will produce a HI and a LO on the Q and $\overline{Q}$ outputs respectively, and the Channel 1 Preamplifier signal will drive the Delay Line Driver as described in the "Vertical Preamplifier" section. The Channel 2 Preamplifier will be disabled.

CHANNEL 2 DISPLAY ONLY. The CH 2 position of S550 holds the $\overline{R}$ input of U540A LO through CR538 and the $\overline{S}$ input is held HI by R538. The outputs will then be Q LO and $\overline{Q}$ HI to enable the Channel 2 Preamplifier signal to drive the Delay Line Driver while the Channel 1 Preamplifier is disabled.

To display the ADD, ALT, or CHOP formats, S550 must be in the BOTH position to ground the A, C, and F pins of S545.

ADD DISPLAY. In the ADD position of S545, both the $\overline{S}$ and $\overline{R}$ inputs of U540A are held LO by CR534 and CR537. The Q and $\overline{Q}$ outputs are then both HI and signal currents from the Channel 1 and Channel 2 Preamplifiers add together to drive the Delay Line Driver.

CHOP DISPLAY. In the CHOP position, the $\overline{\text{Chop Enable}}$ line is held LO keeping the Q output of U540B HI. This enables multivibrator U537D to run at a frequency that is determined by R544, R545, and C545. The output of U537C, the inverted output of the multivibrator, is used to drive U537A and U537B.

Coupling capacitor C547 and resistors R547 and R548 form a differentiating circuit that produces positive- and negative-going short-duration pulses. These pulses are inverted by U537B to generate the Chop Blank signal utilized by the Z-Axis Amplifier.

The Alt Sync signal applied to one input of U537A is HI except during Holdoff. This allows the output of U537C to be inverted by U537A which drives the clock input of U540A. Since the $\overline{Q}$ output of U540A is connected back to the D input and both the $\overline{S}$ and $\overline{R}$ inputs are HI, the outputs of U540A will toggle with each clock input. The Delay Line Driver will then be driven alternately by the Channel 1 and Channel 2 Preamplifiers at a rate determined by multivibrator U537D.

ALTERNATE DISPLAY. In the ALT position, the $\overline{\text{Chop Enable}}$ line is held HI and multivibrator U537D is disabled. The output of U537C will be HI and the Chop Blank signal from U537B will be LO. Input signals to U537A will be the HI from U537C and the Alt Sync signal from the Holdoff circuitry in the A Sweep Generator. The output of U537A will then be the inverted Alt Sync signal which clocks U540A. This causes the outputs of U540A to toggle at the end of each sweep so that the Channel 1 and Channel 2 Preamplifier signals will alternately drive the Delay Line Driver.

Delay Line Driver

The Delay Line Driver converts the signal current from the Vertical Preamplifiers or the Trigger View circuitry into a signal voltage for input to the Delay Line. Transistors Q202, Q203, Q206, and Q207 form a differential shunt feedback amplifier with the gain controlled by R216 and R217. Amplifier compensation is provided by C210 and R210 and output common-mode dc stabilization by U225. Should the voltage at the junction of R222 and R223 deviate from zero, U225 will sink or source base current to Q202 and Q203 through R202 and R203. This will return the outputs of the Delay Line Driver to an average dc value of zero volts. Delay Line DL210 provides a vertical signal delay of about 90 ns so that the Sweep Generator has sufficient time to produce a sweep before the vertical signal that triggered the sweep reaches the crt deflection plates. This permits viewing the leading edge of the internal signal that originated the trigger pulse.

Vertical Output Amplifier

The Vertical Output Amplifier provides final amplification of the input signals for application to the vertical deflection plates of the crt. Signals from the Delay Line are applied to a differential amplifier composed of Q230 and Q231 with low- and high-frequency compensation provided by the RC networks connected between the emitters. Thermal compensation is provided by RT236, and overall gain is set by R233. The output stage of the Amplifier utilizes two totem-pole transistor pairs, Q254-Q256 and Q255-Q257, that convert the collector currents of Q230 and Q231 to proportional output voltages. Resistors R256, R258, R257, and R259 serve as feedback elements and also as divider networks so that each transistor in a pair drops half the final output voltage. The Amplifier output signals are applied to the vertical deflection plates of the crt to produce deflection of the crt beam.

BW LIMIT switch S226, C228 and C229, and a diode bridge consisting of CR226, CR227, CR228, and CR229, are utilized to reduce the bandwidth of the Amplifier if desired. With the bandwidth limit off, R226 is grounded and the nonconducting diode bridge isolates C228 and C229. With bandwidth limit on, R226 is connected to the +8.6-V supply and the diode bridge conducts. The two capacitors are no longer isolated and will attenuate high-frequency signals.

BEAM FIND switch S390 adjusts output-amplifier biasing to limit the voltage swing at the crt plates. This keeps the vertical trace within the graticule area for locating off-screen traces. With the switch in the normal out position, the -8.6-V supply provides emitter current to the Amplifier output stage through R261. When the BEAM FIND switch is in, the direct -8.6-V supply to R261 is removed and emitter current is now supplied through R261 and R262 in series. This reduces the amount of available emitter current and limits the amplifier dynamic range.

A/B Sweep Separation Circuit

The circuit composed of Q283, Q284, Q285, and associated components provides a means of vertically positioning the B trace with respect to the A trace during Alt Horizontal Mode displays. During the B Sweep interval, the $\overline{\text{Sep}}$ signal from the Alternate Display Switching circuit is LO and Q283 is biased off. This allows A/B SWP SEP potentiometer R280 to affect the bias on one side of a differential current source composed of Q284 and Q285. This supplies a dc offset current to the Vertical Output Amplifier and changes the position of the B trace on the crt screen.

During the A Sweep interval, the $\overline{\text{Sep}}$ signal is HI and Q283 is turned on. The base voltages of Q284 and Q285 are then the same, and equal current is supplied to both sides of the Vertical Output Amplifier so that no offset of the A trace occurs.

TRIGGER AMPLIFIERS AND SWITCHING

The Trigger Amplifiers, shown on Diagram 3, provide signals to the A Trigger Generator circuit from either the Vertical Preamplifiers, the EXT INPUT connector, or the power line. The A&B INT switch selects either Channel 1 or Channel 2 as the trigger source, and the A SOURCE switch selects between internal, line, or external trigger sources.

Internal Trigger

Signals from the Vertical Preamplifiers drive the Internal Trigger Amplifier with channel selection determined by the VERTICAL and HORIZONTAL MODE switches.

Trigger pickoff from the Preamplifiers is accomplished by Q302 and Q303 for Channel 1, and Q327 and Q328 for Channel 2. The circuitry associated with Channel 2 is the same as that for Channel 1 except that it does not have a trigger offset adjustment.

Signals from the Channel 1 Preamplifier are applied to Q302 and Q303. These emitter-follower transistors each drive one input transistor in U310, and the collectors of the U310 input transistors in turn supply emitter current to two current-steering transistors. The compensation and biasing network connected to the emitters of the input transistors in U310 is fixed for Channel 2 but not for Channel 1. Potentiometer R309 adjusts the emitter bias levels of the two input transistors so that dc offsets between channels can be matched.

The base bias voltages of one transistor in each output differential amplifier pair is fixed by the divider network composed of R321 and R322. The other base voltage is controlled by the $\overline{\text{Ch 1 Trig}}$ line from the Trigger Channel Switch. When the $\overline{\text{Ch 1 Trig}}$ signal is HI, the transistors in each output pair with the collectors connected together are biased on and the other transistors are off. The collector signal currents are equal in magnitude but opposite in polarity and signal cancellation occurs. If the $\overline{\text{Ch 1 Trig}}$ signal is LO, the other transistors in each pair will be biased on and an output signal will be developed across R314 and R315 to drive the Internal Trigger Amplifier.

Internal trigger channels are chosen by the A&B INT switch with the A SOURCE switch set to INT. The INT position of S392 reverse biases CR393 and CR399 to prevent external trigger signals or the line trigger signal from reaching the A Trigger Generator. Signals from the Internal Trigger Amplifier are passed to the A Trigger Generator through forward-biased CR372.

CHANNEL 1. For triggering from Channel 1, the A&B INT switch is set to CH 1. The XY line connected to S555 will be at ground potential and one input of U555B will be held LO by CR556. The output of U555B will then also be LO and the Channel 1 signal path through U310 will be enabled. The Channel 2 signal path is disabled by the outputs of both U555C and U565B being HI.

CHANNEL 2. For triggering from Channel 2, the A&B INT switch is set to CH 2. One input each of U555C and U555D will be LO and force both gate outputs LO. The LO from U555C will enable the Channel 2 signal path through U335 and the HI outputs of U555B and U565C will disable the Channel 1 path.

VERT MODE. When the A&B INT switch is set to VERT MODE, trigger source selection is determined by the two VERTICAL MODE switches. For all VERTICAL MODE switch combinations except BOTH-CHOP, the $\overline{\text{V Mode T}}$ line is HI. The inputs and outputs of U555B, U555C, and U555D will all be HI, and triggering selection will then be determined by the inputs of U565B and U565C that are controlled by U540A in the Channel Switch circuit.

When Channel 1 is selected (VERTICAL MODE switch set to CH 1), the input to U565C will be HI. The gate output will be LO and the Channel 1 signal will be selected. The LO from the other output of U540A is applied to U565B and causes the $\overline{\text{Ch 2 Trig}}$ line to go HI and the Channel 2 Trigger signal is disabled.

When Channel 2 is selected (VERTICAL MODE switch set to CH 2), the outputs of U540A, U565B, and U565C will be the reverse of the states described for Channel 1 selection. The Channel 2 signal will be selected and the Channel 1 Trigger signal disabled.

When selecting ALT VERTICAL MODE, the inputs of U565B and U565C will toggle with each sweep. The outputs of the two gates will also toggle and the Trigger signal source will alternate with the displayed channel.

In the ADD VERTICAL MODE position, both inputs to U565B and U565C will be HI and the gate outputs will be LO. Both Channel 1 and Channel 2 signal paths will be enabled and their output current will be summed at the inputs of the Internal Trigger Amplifier to produce the internal trigger signal.

The CHOP VERTICAL MODE position grounds the $\overline{\text{V Mode T}}$ line and places a LO on an input of both U555B and U555C. The outputs of these two gates will then be LO and the signal to the Internal Trigger Amplifier will be the same as for the ADD mode.

Internal Trigger Amplifier

The Internal Trigger Amplifier converts the differential trigger signals from the Vertical Preamplifiers into a single-ended signal that drives the X-Axis Amplifier and the A and B Trigger Generators.

Signal current is applied to the emitters of U350D and U350E. The collector current of U350D is converted to a voltage across feedback resistor R357. The opposite-phase collector current of U350E causes a voltage drop across R359 which adds to the voltage at the collector of U350C. This voltage appears at the base of U350A which buffers and level shifts the signal back to 0 V. The emitter signal of U350A drives the X-Axis Amplifier, the B Trigger Generator, and the base of U350B. The emitter signal of U350B in turn drives the A Trigger Generator whenever CR372 is forward biased.

A External Trigger Amplifier

The A External Trigger Amplifier buffers signals applied to the EXT INPUT connector to drive the A Trigger Generator. Input signal coupling is determined by A EXT COUPLING switch S380 which selects AC, DC, or DC ÷ 10 coupling.

When S380 is in the AC position, the input signal is ac-coupled through C376. In the DC position, the input signal is connected directly to the Amplifier. The DC ÷ 10 position attenuates the input signal by a factor of 10 through the compensated divider composed of R377, R378, C380, and C381.

The signal is then applied to the gate of Q382A. This source-follower drives emitter-follower transistor Q384 which lowers the Amplifier output impedance. The two FETs are a matched pair, and since the gate and source of Q382B are connected together, Q382B will supply source current for Q382A such that there will be no voltage drop across the gate-source junction of Q382A. Protection-diode CR381 clamps the signal at the gate of Q382A to about −9 V. The Amplifier output will drive the A Trigger Generator through forward-biased CR393 whenever the A SOURCE switch is set to EXT. When the A SOURCE switch is not set to EXT, the base-emitter junction of Q384 will be reverse biased and the Amplifier will be disabled.

Line Trigger Amplifier

The Line Trigger Amplifier supplies a line-frequency trigger signal to the A Trigger Generator when the A SOURCE switch is in the LINE position.

Transformer T390 in the Power Supply provides a line-frequency signal through R397 to Q397. Diode CR399 is forward biased when S392 is in the LINE position, and the emitter signals of Q397 will drive the A Trigger Generator.

A TRIGGER GENERATOR

The A Trigger Generator, shown on Diagram 3, supplies trigger signals to the A Sweep Generator. Included in the A Trigger Generator circuit are the P-P Auto Trigger, Auto Baseline, and TV Triggering circuitry.

A Trigger Level Circuit

The A Trigger Level Circuit establishes voltages at the ends of the A TRIGGER LEVEL potentiometer as a function of the A TRIGGER push button selection and trigger signals selected by the A SOURCE switch.

In the P-P Auto and TV Field modes, Q413 is off and CR414 and CR415 are reverse biased. Trigger signals selected by the A SOURCE switch are applied to peak detectors consisting of Q420-Q422 and Q421-Q423. These peak detectors track dc levels and have a high voltage transfer efficiency. The positive- and negative-peak signal levels stored by C414 and C415 are near the peak levels of the trigger signal. Amplifiers U426A and U426B are configured as voltage followers with transistors Q428 and Q429 in the feedback loops. These transistors thermally compensate for Q420 and Q421 and level shift the amplifier outputs back to the original dc levels of the input trigger signals. The output of U426A will be the positive peak voltage of the input trigger signal and the output of U426B will be the negative peak voltage. Potentiometers R434 and R435 adjust for dc offsets in the trigger circuitry.

In the Norm mode, +8.6 V is applied to the junction of R411 and R414. Diode CR414 is forward biased, turning on Q413 which forward biases CR415. Input transistors Q420 and Q421 are then biased off and no trigger signals will reach the A Trigger Level circuit. The inputs and outputs of U426A and U426B will then be fixed voltages and independent of trigger-signal amplitude.

A Trigger Level Comparator

The A Trigger Level Comparator compares signals selected by the A TRIGGER SOURCE Switch to a voltage set by the A TRIGGER LEVEL control. Positive or negative slope triggering is selected by the A TRIGGER SLOPE switch.

Transistors U460B and U460E compare the wiper voltage on the A TRIGGER LEVEL control to the input trigger signal, and the transistor with the higher base voltage will conduct more of the available emitter current. The output collector currents supply emitter current to two transistor pairs which serve as cross-wired switches that are biased on or off by the A TRIGGER SLOPE switch. When S464 is set to the positive slope position, U460C and U460F are biased on and U460A and U460D are biased off. For the negative slope position, the transistors reverse states to invert the comparator output polarity.

A Schmitt Trigger and TV Trigger Circuit

This circuitry generates a signal that drives the A Trigger Logic as a function of the Trigger Level Comparator output signal and the A TRIGGER Mode switches.

The output signals from the A Trigger Level Comparator drive Q460 and Q463. These transistors are configured as a current mirror that converts the differential output to a single-ended current to drive amplifier U480C. Slope Balance potentiometer R471 corrects for dc offsets between positive and negative slope. Shunt-feedback amplifier U480C converts a current input to a voltage output to drive the input of the Schmitt Trigger, U480D, through R469. Positive feedback for the Schmitt Trigger is provided by potentiometer R479, and C479 reduces trigger jitter by increasing positive feedback at higher frequencies. The setting of R479 determines the circuit hysteresis.

When TV Field is not selected, the TV Trig Enable line connected to R402 and R473 is LO. Transistors Q402 and Q403 are biased off and a LO is placed on one input of U480A by R474. This LO input will cause U480A to invert the output from U480D. With Q403 off, a LO will be placed on one input of U480B by R405 and U480B will also act as an inverter. The A Trigger signal at the output of U480B is therefore the same as the input signal to U480A.

When TV Field is selected, the TV Trig Enable line is HI. The outputs of U480D will determine the conduction states of Q402 and Q403, and the input of U480A connected to R473 will be HI. The output of U480A will be LO and U480B will invert the signal at its other input. Signals at the collector of Q403 are filtered by C408, R405, and C405 to reject TV video information and average the TV horizontal-sync pulses. Setting the trigger-level threshold near the center of the horizontal-sync-pulse swing establishes the untriggered level. When the TV vertical-sync block occurs, the output of the filter applied to U480B pin 7 rises to a level that will cause the Schmitt Trigger circuit to switch. Precise TV field synchronization is obtained as a result of this filtering action. The A Trigger signal output will be the inverse of the filtered signal appearing at U480B pin 7.

A SWEEP GENERATOR AND LOGIC

The A Sweep Generator and Logic circuitry, shown on Diagram 4, produces a linear voltage ramp that is amplified by the Horizontal Amplifier to provide horizontal deflection of the crt beam. The Sweep Generator circuits also produce signals that are used to generate correct timing of the crt unblanking and intensity levels used for viewing the display. See Figure 3-3 for the block diagram of the A Sweep Generator and Logic circuitry.

The Sweep Logic circuitry controls the holdoff time, starts the sweep upon reception of a trigger signal, and terminates the sweep at the proper sweep level. When using P-P Auto or TV Field triggering, the Sweep Logic circuitry will cause the Sweep Generator to free run, producing a baseline trace if a trigger signal is not received within a predetermined time period.

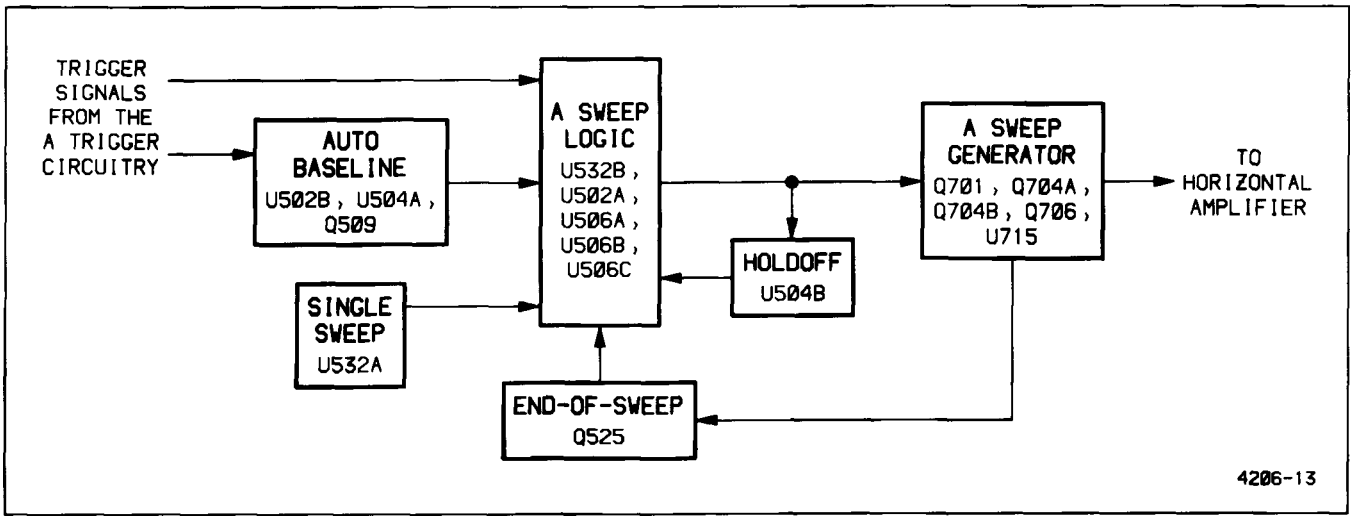

Figure 3-3. Block diagram of the A Sweep Generator and Logic circuitry.

A Miller Sweep Generator

The A Miller Sweep Generator produces a linear voltage ramp that drives the Horizontal Amplifier. It produces this ramp by maintaining a constant current through timing capacitors to obtain a linearly increasing voltage.

Field-effect transistors Q704A and Q704B are matched devices with Q704B sourcing current for Q704A. Since the gate and source of Q704B are connected together, the source current of Q704A will be of a magnitude such that there is no voltage drop across its gate-source junction.

When the sweep is not running, Q701 is biased on to hold the timing capacitors in a discharged state. The low impedance of Q701 in the feedback path holds the A Miller Sweep output near ground potential. The voltage across Q701, in addition to the base-emitter voltage of Q706, prevents saturation of the output device.

A sweep ramp is initiated when Q576 is biased off. This will bias off Q701 and the timing capacitors can charge at a rate determined by timing resistors R701 and R702 and the position of A SEC/DIV switch S701. One end of timing resistor R701 is connected to the wiper of R721 and the other end is connected to the input of the Miller integrator. Due to feedback from the circuit output through the timing capacitors, the integrator input voltage remains fixed and establishes a constant voltage across the timing resistors. This constant voltage, which produces a constant current through the timing capacitors, results in a linearly increasing voltage at the output of the A Miller Sweep circuit.

When the output reaches approximately 12 V, the Sweep Logic circuitry will initiate the holdoff period in which Q701 is turned on and the A Sweep Generator is reset. This holdoff period is necessary so that the timing capacitors can be fully discharged before another sweep starts. Capacitors C702 and C703 are always in the charging circuit and are used for high sweep speeds. Capacitor C701A in series with C701B are used for medium sweep speeds, and C701B is used for slow sweep speeds.

The Sec/Div Variable circuitry utilizes an operational amplifier to maintain a constant reference voltage at one end of R721 independent of the circuit load. The voltage applied to the timing resistors varies with the rotational position of R721, the SEC/DIV Variable control. A fixed dc voltage is applied to the noninverting input of the operational amplifier and feedback resistors R717 and R718 establish double that voltage at the anode of VR720.

A Sweep Logic

The A Sweep Logic circuitry controls sweep generation, as a function of incoming trigger signals and the A Trigger mode selected.

Incoming trigger signals from the output of U480B will clock U502, a one-shot multivibrator, and cause the Q output to go from LO to HI. If another trigger signal is not received by U502 within a time period determined by the time constant of R503 and C501, the Q output will return LO. Whenever trigger signals are being received, the $\overline{Q}$ output of U502 will bias on Q509 and illuminate TRIG'D LED

DS518. The output state of U502 is used in the Auto Baseline circuit as described in the "P-P AUTO and TV FIELD" section.

NORM. When NORM Trigger mode is selected, input pin 12 of U532D is held HI by S401B, causing the gate output to also be HI. The output of U532C will then be LO and U506A will not be held reset. Input pin 4 of U532A is held HI by S401C, causing the output to be LO which places a LO on the D input of U506A. Trigger signals received at the clock input of U506A will then clock this LO to the Q output.

During the previous holdoff period, U506A had been set by U532B so that the $\overline{Q}$ output went LO. This biased on Q576 and the A Miller Sweep was prevented from running. Whenever U506A is clocked following holdoff by a trigger signal, the LO on the D input will be transferred to the Q output and the $\overline{Q}$ output will go HI. This will bias off Q576 and the A Miller Sweep will generate the sweep ramp as described in the "A Miller Sweep Generator" section. When the ramp voltage is about 12 V, Q525 will be biased on. The output of U532B will change from LO to HI, setting U506A and biasing on Q576. With Q576 conducting, holdoff one-shot U504B will be triggered and the A Miller Sweep Generator will be reset to turn off Q525.

With U504B triggered, the $\overline{Q}$ output changes from HI to LO and will stay LO for a time duration determined by the Var Holdoff circuitry and the A SEC/DIV switch position. VAR HOLDOFF potentiometer R9521 determines the amount of charging current available to charge C518, C519 or C520 at pin 15 to the threshold voltage level on pin 14. During the time the $\overline{Q}$ output is LO, the set input of U506A is held HI so that no trigger pulses can initiate a new sweep. When pin 15 of U504B reaches the threshold voltage on pin 14, the $\overline{Q}$ output goes HI to end the holdoff period and release U506A from the set condition. The circuit is then enabled to generate another sweep once a trigger signal is again applied to the clock input of U506A.

P-P AUTO and TV FIELD. When P-P Auto or TV Field is selected, the Auto Baseline configuration is enabled. Pin 12 of U532D is held LO by R569 and the output will follow the signal provided by the Q output of U502. If trigger signals are being received by U502, the output of U532D will be HI and cause the output of U532C to be LO. Flip-flop U506A will respond to trigger signals as described in the "NORM" section. If trigger signals are not being received by U502, the output of U532D will be LO. The output of U532C will then be the inverse of the input signal applied to pin 11 so that U506A will be reset when holdoff ends, causing a sweep to be generated. With no new trigger pulses being applied to the circuitry, U506A will be continuously set and then reset in this manner to generate sweeps.

SGL SWP. In the Sgl Swp Mode, both the P-P AUTO and NORM buttons are out. This results in a LO at the output of U532C so that U506A is not held reset. A LO is also on input pin 4 of U532A.

During the previous holdoff period, U532B had reset U506B to cause the Q output to be LO. The D input of U506A will therefore be HI and clock signals to the gate will keep the $\overline{Q}$ output LO and the sweep disabled. When the SGL SWP button is pushed in, the $\overline{Q}$ output of U504A will go LO for a time period determined by the time constant of R504 and C504 and then return HI. This HI will then clock through the HI on the D input of U506B to the Q output. Consequently the output of U532A will go LO and CR514 will be reverse biased to bias on Q511 and light the READY LED. The next trigger pulse applied to the clock input of U506A will then initiate a sweep as described previously. At the end of the sweep, U506B will again be reset, causing the TRIG'D LED to go out and place a HI on the D input of U506A. A new sweep will not be initiated until the SGL SWP button is again pushed.

X-Y. In the X-Y mode of operation, the $\overline{XY}$ line is LO which holds the input of U532B LO through CR518. The output of U532B will hold U506A set and no sweeps can be initiated.

ALTERNATE B SWEEP

The Alternate B Sweep circuitry, shown on Diagram 5, produces a linear voltage ramp that is amplified by the Horizontal Amplifier to provide the B Sweep horizontal deflection on the crt. The Alternate B Sweep circuitry also produces the sweep-switching signals that control the display of the A and B Sweeps, and the gate signals used by the Intensity and Z-Axis circuits to establish the crt unblanking and intensity levels needed for producing both the A Intensified and B Sweep displays.

The B Sweep ramp is enabled by the B Sweep Logic circuit either immediately after the end of the established delay time (Runs After Delay) or upon receipt of the first trigger signal after the delay tim has elapsed. This delay time is a function of the B Delay Time Position Comparator circuit and the A sweep.

B Miller Sweep Generator

The B Miller Sweep Generator is composed of Q709, Q710A, Q710B, Q712, and associated timing components. This circuit produces the B Sweep and functions in the same manner as the A Miller Sweep Generator; see the "A Miller Sweep Generator" section for a description of circuitry operation. The output at the collector of Q712 drives the Horizontal Amplifier and Q643.

B Trigger Level Comparator (SN B014886 & UP)

The B Trigger Level Comparator is composed of transistor array U605, U625, Q619, and Q620. This circuit determines both the trigger level and slope at which the B triggering signal is produced. It functions in the same manner as the A Trigger Level Comparator with the exclusion of the TV Trigger and Trigger View circuitry. See the "A Trigger Level Comparator" section for a description of the circuit operation. Buffering of the noninverting output of U625B is provided by U625A, and Q630 and Q631 level shift the signals to TTL Levels. The inverting output of U625A also produces the B Trigger signal used by the CTM circuitry. The circuit output at the collector of Q630 supplies trigger signals to clock U670A.

B Trigger Level Comparator (SN B014885 & BELOW)

The B Trigger Level Comparator is composed of transistor array U605, U625C, Q619, and Q620. This circuit determines both the trigger level and slope at which the B triggering signal is produced. It functions in the same manner as the A Trigger Level Comparator with the exclusion of the TV Trigger and Trigger View circuitry. See the "A Trigger Level Comparator" section for a description of the circuit operation. Buffering of the inverting and noninverting outputs of U625D is provided by U625A and U625B, and Q630 and Q631 level shift the signals to TTL levels. The output of U625A also produces the B Trig signal used by the CTM circuitry. The circuit output at the collector of Q630 supplies trigger signals to clock U670A.

Runs After Delay

The Runs After Delay circuit allows the B Sweep Logic to generate a B Sweep independently of any B Trigger signals. In the Runs After Delay mode, B TRIGGER LEVEL control R602 is rotated fully clockwise. This biases off Q637 and places a LO on the collector. Inverter U660D will then have a HI output with resistor R640 providing positive feedback. The output of U660A will therefore be LO and U670A will be held set with the $\overline{Q}$ output LO.

If the B TRIGGER LEVEL control is not fully clockwise, Q637 is biased on and the B Sweep is in the triggered mode. The output of U660D will be LO, the output of U660A will be HI, and U670A will no longer be held set.

Operation of the B Sweep Logic circuitry under both of these conditions is described in the "B Sweep Logic" discussion. The output signal of U660D is applied to the CTM Intensified Zone Controller circuitry and serves as an input to U1603.

B Delay Time Position Comparator

The B Delay Time Position Comparator circuit compares the amplitude of the A Sweep sawtooth output voltage to the dc voltage level set by B DELAY TIME POSITION potentiometer R9644. The output of the comparator is used to initiate a B Sweep and to control the B Z-Axis Logic circuit switching.

The inputs to the comparator, U655, are the Delay signal from the Analog Section of the Delay/Delta Time Controller circuit and the A Sweep voltage from the divider network composed of R651, R652, and R653. Input voltage ranges to the comparator are determined by VR645 and R646 for the noninverting input and by R652 for the inverting input. Delay Start potentiometer R646 is adjusted in conjunction with potentiometer R652 to set the B DELAY TIME POSITION dial calibration.

The output of the comparator is enabled or disabled by the strobe signal connected to pin 6. When the $\overline{\text{A Only}}$ signal is HI, the comparator is enabled. When $\overline{\text{A Only}}$ is LO, the output of the comparator is a high impedance and therefore a HI is present on pin 9 of U680C.

B Sweep Logic

The B Sweep Logic circuitry utilizes signals from the associated B Sweep circuitry to generate control signals for both the B Miller Sweep and the B Z-Axis Switching Logic circuits.

In the Runs After Delay mode, U660A places a LO on the $\overline{S}$ input of U670A. During the previous holdoff period, U680D pin 13 strobed LO. The output of the flip flop composed of U680C and U680D went HI and the output of U660F went LO. With both the $\overline{S}$ and $\overline{R}$ inputs of U670A LO, the $\overline{Q}$ output is HI to bias on Q709 and prevent the B Miller Sweep from running. Once the A Sweep voltage at U655 pin 3 exceeds the voltage at pin 2, the comparator output will go LO. The flip flop composed of U680C and U680D will change output states and cause the $\overline{R}$ input of U670A to be HI. The LO on the $\overline{S}$ input will then cause the $\overline{Q}$ output of U670A to go LO. The $\overline{\text{Delay End}}$ signal at the output of U665A will go LO to indicate to the CTM circuitry that the B Sweep has started. Transistor Q709 will shut off and the B Miller Sweep Generator will produce a linear ramp. If the ramp voltage reaches about 12 V, sweep-end comparator Q643 will turn on and cause the output of U665D to go HI. The B Miller Sweep Generator will continue to run, but the trace will be blanked because the $\overline{B}$ Gate line is HI which reverse biases CR817. Once the ramp is at approximately 13 V, VR712 will conduct and prevent the voltage from increasing further.

The B Sweep Generator will be reset for another sweep by one of two means. If the A Sweep doesn't end before the B Sweep, the Generator will not be reset until the Alt Sync line goes from HI to LO to change the U680C-U680D flip-flip output states. The $\overline{R}$ input of U670A will then be LO, causing the $\overline{Q}$ output to be HI and reset the Generator. Depending on the settings of the A and B SEC/DIV switches, the A Sweep may end before the B Sweep. If this occurs, the Alt Sync line will go LO at the end of the A Sweep and cause an immediate resetting of the Generator. In either case, a new sweep will be initiated the next time the A Sweep voltage at U655 pin 3 exceeds the voltage at pin 2.

When not in the Runs After Delay mode, the output of U660A is HI and U670A has a HI on both the $\overline{S}$ and D inputs. The circuitry connected to the $\overline{R}$ input of U670A

functions as described above. When the output of U660F goes HI, U670A is no longer held reset and the first B trigger signal from the collector of Q630 will clock through the HI on the D input. The $\overline{Q}$ output of U670A will then go LO and a B Sweep will be initiated.

Alternate Display Switching Logic

The Alternate Display Switching Logic circuitry controls both the Horizontal Amplifier sweep switching and the B Z-Axis Logic switching.

HORIZONTAL MODE switch S648 selects the input logic levels that are applied to the circuitry. In the A Horizontal Mode, the $\overline{S}$ input of U670B is LO and the $\overline{R}$ input is HI. This holds U670B set and allows only the A Sweep to be passed to the Horizontal Amplifier. In the B Horizontal mode, the set input of U670B is HI and the reset input is LO to hold U670B reset and allow only the B Sweep to reach the Horizontal Amplifier.

With S648 set to ALT, and for all settings of the VERTICAL MODE switches except BOTH-ALT, the $\overline{Valt}$ signal applied to U660E and the $\overline{S}$ and $\overline{R}$ inputs of U670B are all HI. The LO output of U660E causes the output of U680B to be HI, and whenever the Alt Sync signal applied to pin 1 goes LO, the gate output will change from LO to HI and clock U670B. The outputs of U670B will therefore toggle with each Alt Sync signal transition to alternately enable the A and B Sweeps to reach the Horizontal Amplifier. Whenever the B Sweep is selected for the Horizontal Amplifier, the $\overline{Q}$ output of U670B will be HI. This HI is applied to U665C pin 9, and since pin 10 is also HI, the $\overline{Sep}$ signal from U665C will be LO to enable the A/B Sweep Separation circuitry.

When the CH 1-BOTH-CH 2 VERTICAL MODE switch is set to BOTH, the ADD-ALT-CHOP switch becomes functional. In the ALT VERTICAL MODE position, the $\overline{Valt}$ signal is LO, the Halt signal is HI, and the CH 1 Selected signal is a TTL square wave that switches states at the end of the A Sweep. Input pin 4 of U680B will be HI and the gate output will be the inverse of the CH 1 Selected signal. This output signal is NANDed with the Alt Sync signal by U680A to clock U670B. Whenever the Alt Sync signal goes LO at the end of a sweep and the Ch 1 Selected signal switches from LO to HI, U670B will be clocked. Since only positive transitions on the clock input will cause the flip-flop to change output states, two A Sweeps are required to cause the flip-flop output levels to switch. With this switching arrangement, the crt will first display the two A Intensified Sweeps and then the two Alternate B Sweeps.

B Z-Axis Logic

The B Z-Axis Logic circuitry switches signal current levels to drive the Z-Axis Amplifier for both the B and the A Intensified Sweep displays. The current supplied is summed with the other signal inputs on the Z-Drive line.

When the HORIZONTAL MODE switch is in the ALT position, pin 5 of U665B is HI. The outputs of U670B and the $\overline{B\ Gate}$ signal from the output of U665D together with the INTENSITY controls determine the intensity of the A and B Sweeps. The $\overline{B\ Gate}$ signal is applied through R679 to the Digital Section of the Delay/Delta Time Controller in the CTM circuitry.

When the A Sweep is displayed, the Q output of U670B is HI and the $\overline{Q}$ output is LO. These output levels will bias on Q680 and bias off Q685. The emitter voltage of Q680 will reverse bias CR817 to prevent Z-Axis drive current from flowing through the diode. With Q685 off, additional Z-Axis drive current to intensify the A Sweep will be supplied whenever CR685 is biased off. Since input pin 5 of U665B is HI, the gate output and therefore the conduction state of CR685 is determined by the Ctrintens signal from the Intensified Zone Controller in the CTM circuitry. Whenever the B Sweep is running, the output of U665B will be LO and CR685 will be biased off whenever Ctrintens is HI. If the B Sweep is not running, the output of U665B will be HI and CR685 will be biased on. This will bias off CR816 and the A Sweep will not be intensified.

If the outputs of U670B are set to display the B Sweep (Q LO and $\overline{Q}$ HI), Q680 will be biased off and Q685 will be biased on. The emitter voltage of Q685 will reverse bias CR816 to prevent Z-Axis drive current from flowing through the diode. With Q680 off, the B Sweep will be displayed if CR680 is reverse biased. Whenever the B Sweep is running, the output of U665D is LO. Diode CR680 will then be reverse biased and Z-Axis drive current will flow through CR817. If the B Sweep is not running, the output of U665D is HI, forward biasing CR680 and therefore reverse biasing CR817. No Z-Axis drive current can then flow through CR817.

HORIZONTAL

The Horizontal Amplifier circuit, shown on Diagram 6, provides the output signals that drive the horizontal crt deflection plates. Signals applied to the Horizontal Preamplifier can come from either the A or the B Miller Sweep Generator (for sweep deflection) or from the XY Amplifier (when X-Y display mode is selected). Sweep switching is under control of the Alternate Display Switching Logic circuit. See Figure 3-4 for the block diagram of the Horizontal Amplifier.

The Horizontal POSITION control, X10 Magnifier circuitry, and the horizontal portion of the Beam Find circuitry are also contained in the Horizontal Amplifier circuit.

Horizontal Preamplifier

The Horizontal Preamplifier selects display modes and amplifies input signals for application to the Horizontal Output Amplifier.

The A and B Sweeps are applied to the emitters of Q732 and Q742, through Sweep Gain potentiometers R730 and R740. Switching of the A and B Sweeps is controlled with these transistors. Using the A DISP and B DISP signals obtained from the Alternate Display Switching Logic circuitry (Diagram 5), Q732 and Q742 are either biased into the active or cutoff regions via CR732 and CR742. The POSITION control (R726) horizontally adjusts the crt trace position by supplying a variable dc offset voltage, through pin 14, to the output of the preamplifier. Preamplifier output bias current levels are set by R751 at pin 5, and frequency compensation for X-axis signals is provided by C751, connected to pin 13.

Horizontal X10 Gain is set by the resistor network connected between pins 3 and 6. When the X10 Magnifier is on, S721 is closed and the timing adjustment is made using R754. Magnifier registration is adjusted by R749 so that there is no horizontal trace shift when switching between the X10 Magnifier On and Off positions.

X-Y Amplifier

The X-Y Amplifier amplifies the Channel 1 signal from the Internal Trigger circuitry for application to the Horizontal Preamplifier.

When the X-Y mode is selected, Q737 is biased on to establish a HI on U760 pin 12 so that the A and B Sweeps are disconnected from the Preamplifier outputs. The $\overline{XY}$ signal line will be LO and Q756 will be biased off to enable the X-Axis signal to drive the noninverting input of U758. The output of U758 will then be a function of the X-Axis signal and the Horizontal POSITION control wiper voltage. The X-Axis signal gain is adjusted by R760 and the input voltage from the Horizontal POSITION control at pin 14 is disconnected within U760 so that it does not affect the Preamplifier output. The input signal at pin 11 from U758 will be converted to a differential output signal and applied to the Horizontal Output Amplifier.

When the X-Y mode is not selected, Q756 is biased on and the X-Axis signal is shunted to ground.

Horizontal Output Amplifier

The Horizontal Output Amplifier provides final amplification of the horizontal signal to drive the horizontal crt deflection plates.

Signals from the (+) and (−) Swp outputs of U760 are used to drive two shunt-feedback amplifiers. Due to the feedback, the input impedance of these amplifiers is low.

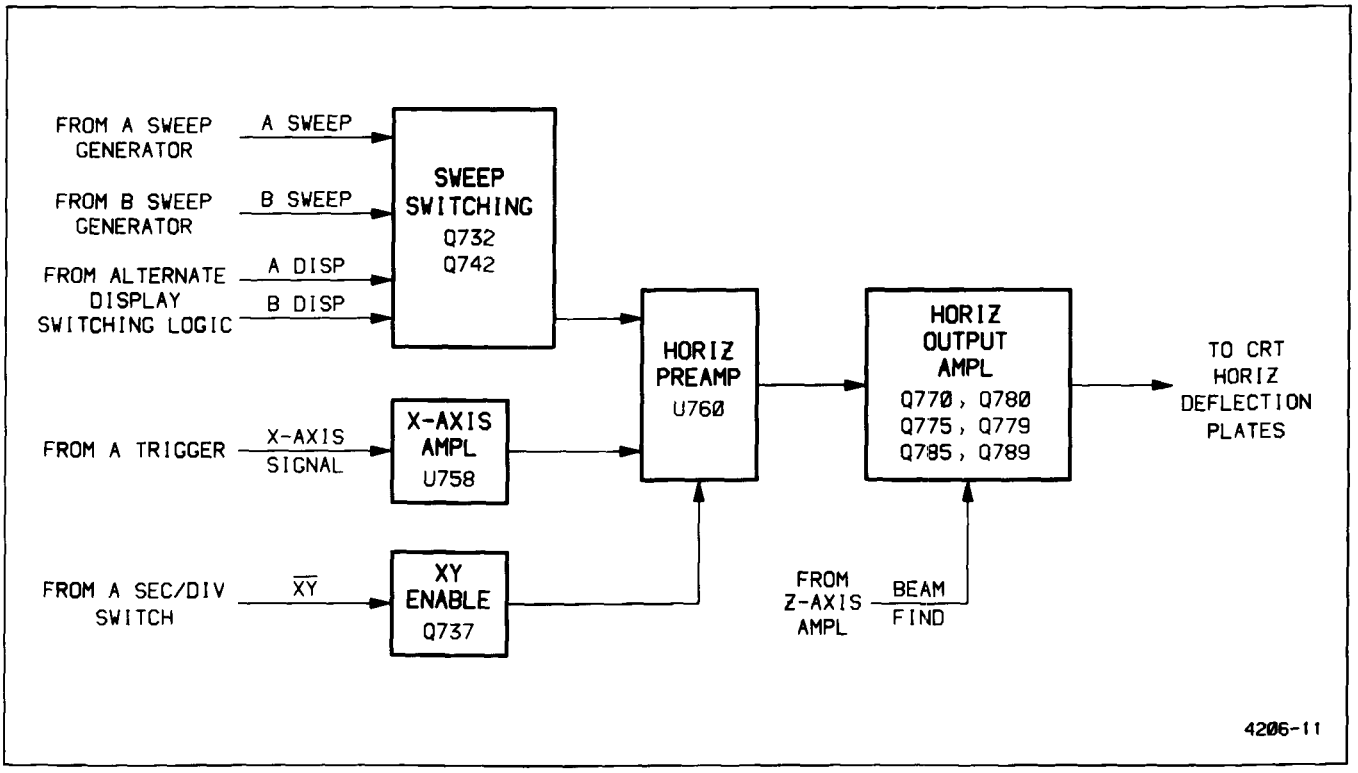

Figure 3-4. Block diagram of the Horizontal Amplifier.

The base voltages of Q770 and Q780 are at nearly the same dc level due to forward-biased diodes CR765 and CR768 between the two emitters.

Transistors Q770, Q775, and Q779 form a cascode-feedback amplifier for driving the right crt horizontal deflection plate with R775 setting amplifier gain and C775 providing high-frequency compensation. For low-speed signals, Q779 serves as a current source for Q775, and at high sweep rates, the ramp is coupled through C779 to the emitter of Q779. This provides additional pull-up output current to drive the crt at high sweep rates. The amplifier consisting of Q780, Q785, and Q789 drives the left crt horizontal deflection plate in the same manner as described above with zener diode VR782 level shifting the collector signal of Q780.

The BEAM FIND function is implemented when S390 is pushed in to disconnect the cathode of CR764 from the −8.6-V supply. The voltage on the cathode of VR764 goes positive, causing CR780 and CR770 to be forward biased. Current from R764 causes the output common-mode voltage of the two shunt-feedback amplifiers to be shifted negative to reduce the available voltage swing at the crt plates. This prevents the trace from being deflected off-screen horizontally.

Z-AXIS AMPLIFIER

The Z-Axis Amplifier, shown on Diagram 7, controls the crt intensity level via several input-signal sources. The effect of these input signals is either to increase or decrease trace intensity or to completely blank portions of the display. The Z-Drive signal current as determined by the A and B Z-Axis Switching Logic and the input current from the EXT Z AXIS INPUT connector (if in use) are summed at the emitter of common-base amplifier Q825 and thereby determine the collector current of the stage. This transistor provides a low-impedance termination for the input signals and isolates the signal sources from following stages of the Z-Axis Amplifier.

Common-base transistor Q829 establishes a constant current through R832. This current is divided between Q825 and Q829 with the portion through Q829 driving the shunt-feedback output amplifier consisting of Q835, Q840, and Q845. The bias level of Q825 therefore determines the amount of emitter current available to Q829. Feedback-resistor R841 establishes the transresistance gain which converts the input current to output voltage. Emitter-follower Q835 is dc coupled to Q840, and for low-speed signals Q845 acts as a current source. Fast transitions couple through C845, providing additional current gain through Q845 for fast voltage swings at the output of the Amplifier.

External Z-Axis input voltages establish proportional input currents through R822 and R823, and Amplifier sensitivity is determined by the transresistance gain of the shunt-feedback amplifier. Diode CR823 protects the Z-Axis Amplifier if excessive signal levels are applied to the EXT Z AXIS INPUT connector.

The intensity of the crt display in the A, B, and Alt Horizontal modes is determined by the INTENSITY controls and associated circuitry. The A INTENSITY potentiometer controls the base voltage of Q804 to determine the amount of emitter current that will flow through the transistor and therefore the level of the Z-Axis signal. Likewise the B INTENSITY potentiometer will control the base voltage of Q814 and the intensity of the B and Alt sweep displays.

When only the A Sweep is displayed, Q586 and Q583 are biased off. The current through R818, as set by the A INTENSITY potentiometer, will flow through CR818 and Q825 to fix the voltage level at the Z-Axis Amplifier output. For a B-only display, Q586 is biased on to reverse bias CR818 and prevent A-intensity current from reaching Q825. Current determined by the base voltage of Q814 will flow through CR817 to Q825 and determine the B Sweep intensity. For an alternating A and B display, Q586 will be biased off when the A Sweep is displayed. During the portion of the A Sweep in which the B Sweep runs, current from R816 is allowed to flow through CR816 by the B Z-Axis Logic circuit to provide an intensified zone.

When CHOP VERTICAL MODE is selected, the Chop Blank signal is applied to the collector of Q825 through CR824 during the display-switching time. Signal current is shunted away from CR825, and the forward bias of Q829 increases to the blanking level. When blanked, the output of the Z-Axis Amplifier drops to a level that reduces the crt beam current below viewing intensity during the chop-switching transition.

For an X-Y display, CR818, CR817, and CR816 are reverse biased. The $\overline{XY}$ signal is LO to reverse bias CR551 and allow current in R820 to flow through CR820. The crt intensity is then controlled by the A INTENSITY potentiometer which sets the current in R820 through Q804.

BEAM FIND switch S390 controls the base bias voltages of Q825 and Q829. When the BEAM FIND button is out, −8.6 V is supplied to a base-biasing network. When the button is pushed in, the −8.6-V supply is removed and the voltage at the anode of VR828 rises to about −5.6 V. This turns off Q829 so that the amplifier output voltage is determined by R835 and the voltage at the BEAM FIND switch, as set by other parts of the Beam Find circuitry. The output voltage of Q835 will then be at a fixed level so that the INTENSITY controls and the Z-Drive signal have no control over the crt intensity. A bright trace or dot will then be displayed.

Dc Restorer

The Dc Restorer circuit produces the crt control-grid bias and couples both dc and ac components of the Z-Axis Amplifier output to the crt control grid. Direct coupling of the Z-Axis Amplifier output to the crt control grid is not employed due to the high potential differences involved. Refer to Figure 3-5 during the following discussion.

Ac drive to the Dc Restorer circuit is obtained from pin 16 of T948. The drive voltage has a peak amplitude of about ±100 V, a frequency of about 20 kHz, and is coupled into the Dc Restorer circuit through C853 and R853. The cathode of CR851 is biased by the voltage applied from the wiper of Grid Bias potentiometer R851, and the ac-drive voltage will be clamped whenever the positive peaks reach a level that forward biases CR851.

The Z-Axis Amplifier output voltage, which varies between +10 V and +75 V, is applied to the Dc Restorer at the anode of CR853. The ac-drive voltage will hold CR853 reverse biased until the voltage falls below the Z-Axis Amplifier output voltage level. At that point, CR853 becomes forward biased and clamps the junction of CR851, CR853, and R854 to the Z-Axis output level. Thus, the ac-drive voltage is clamped at two levels to produce a square-wave signal with a positive dc-offset level.

The Dc Restorer is referenced to the −2-kV crt cathode voltage through R858 and CR854. Initially, both C855 and C854 will charge up to a level determined by the difference between the Z-Axis output voltage and the crt cathode voltage. Capacitor C855 charges from the Z-Axis output through R858, CR854, and CR855, to the crt cathode. Capacitor C854 charges through R858, CR854, R854, and CR853 to the crt cathode.

During the positive transitions of the ac drive, from the lower clamped level toward the higher clamped level, the charge on C854 increases due to the rising voltage. The voltage increase across C854 is equal to the amplitude of the positive transition. The negative transition is coupled through C854 to reverse bias CR854 and to forward bias CR855. The increased charge of C854 is then transferred to C855 as C854 discharges toward the Z-Axis output level. Successive cycles of the ac input to the Dc Restorer will charge C855 to a voltage equal to the initial level plus the amplitude of the clamped square-wave input.

The added charge on C855 determines the control-grid bias voltage. If more charge is added to that already present on C855, the control grid becomes more negative and less crt writing-beam current will flow. Conversely, if less charge is added, the control-grid voltage level will be closer to the cathode-voltage level and more crt writing-beam current flows.

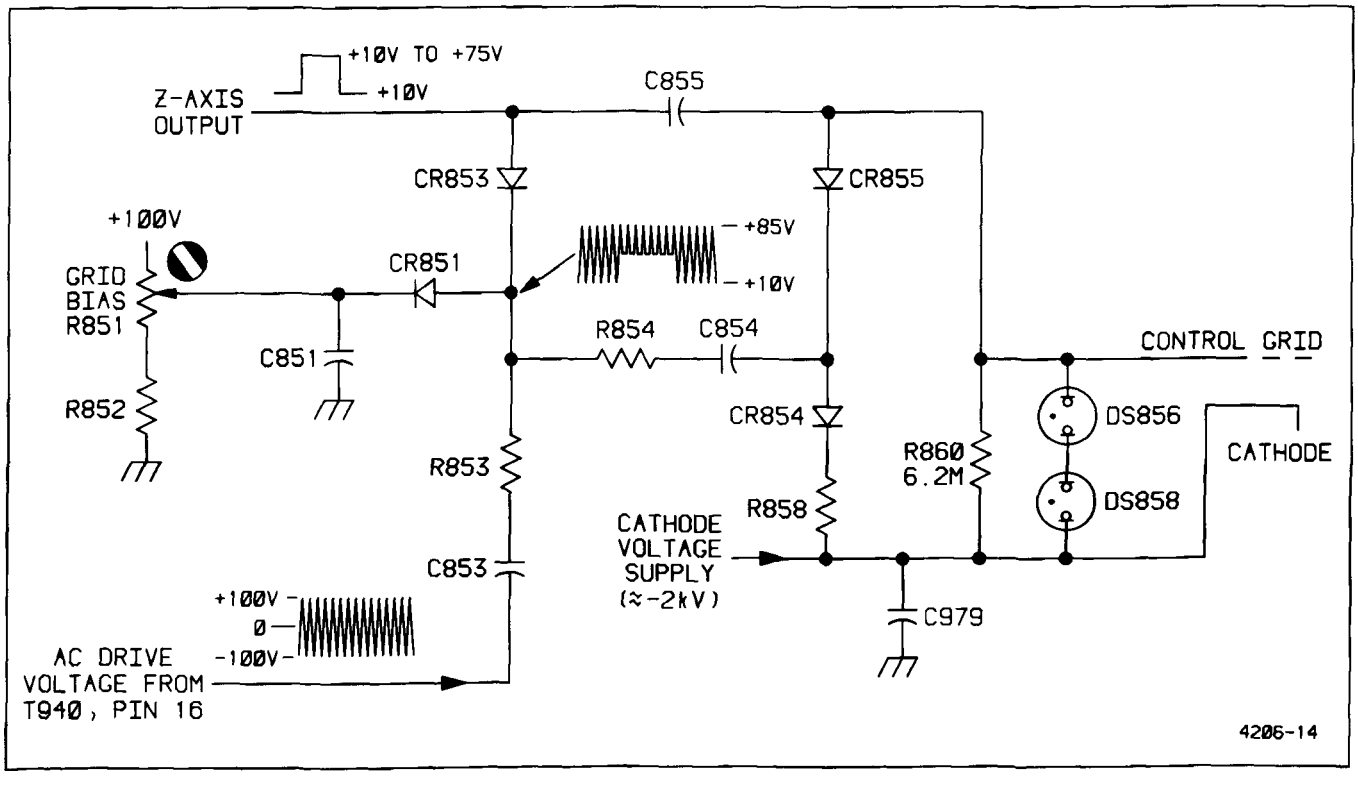

Figure 3-5. Simplified diagram of the Dc Restorer circuitry.

During periods that C854 is charging, the crt control-grid voltage is held constant by the long time-constant discharge path of C855 through R860.

Fast-rise and fast-fall transitions of the Z-Axis output signal are coupled to the crt control grid through C855 to start the crt writing-beam current toward the new intensity level. The Dc Restorer output level then follows the Z-Axis output-voltage level to set the new bias voltage for the crt control grid.

Neon lamps DS858 and DS856 protect the crt from excessive grid-to-cathode voltage if the potential on either the control grid or the cathode is lost for any reason.

POWER SUPPLY AND PROBE ADJUST

The Power Supply circuitry converts the ac power-line voltage into the voltages needed for instrument operation. It consists of the Power Input, Preregulator, and Inverter circuits (which drive the primary of the power transformer) and secondary circuits (which produce the necessary supply voltages for the instrument).

Power Input

The Power Input circuit converts the ac power-line voltage to filtered dc for use by the Preregulator.

POWER switch S901 connects the ac power line through fuse F9001 to the bridge rectifier composed of CR901, CR902, CR903, and CR904. The bridge full wave rectifies the source voltage, and the output is filtered by C906. Input surge current at the time of instrument power-up is limited by thermistor RT901. The thermistor resistance is moderately high when the power is first turned on, but decreases as the input current warms the device. The instrument is protected from large voltage transients by suppressor VR901. Conducted interference originating within the power supply is attenuated by common-mode transformer T901, differential-mode transformer T903, line filter FL9001, and capacitors C900, C901, and C902.

Preregulator

The Preregulator provides a regulated dc output voltage for use by the Inverter circuitry.

When the instrument is turned on, the voltage developed across C906 will charge C925 through R926. When the voltage has risen to a level high enough that U930 can reliably drive Q9070, U930 will receive operating supply voltage through Q930. This level is set by zener diode VR925 in the emitter of Q928 and by the voltage divider consisting of R925 and R927. The zener diode will keep Q928 off until the base voltage reaches approximately 6.9 V. Then Q928 will be biased into conduction and the resulting collector current will cause a voltage drop across R929. This voltage drop will bias on Q930, and the positive feedback through R930 will reinforce the turn-on of Q928. Thus Q930 and Q928 will drive each other into saturation very quickly. Once Q930 is on, U930 will begin to function.

Pulse-width modulator U930 controls the output voltage of the Preregulator by regulating the duty cycle of the pulse applied to the gate of Q9070. It utilizes an oscillator with the frequency determined by R919 and C919 (approximately 60 kHz) and with a sawtooth output voltage at pin 5. This sawtooth voltage is compared internally with the output voltage produced by the two error amplifiers. Whenever the sawtooth voltage is greater than the error amplifier output voltage, Q9070 is biased on to supply current to both C940 and the rest of the circuitry. The two error amplifiers maintain a constant output voltage and monitor the output current of the Preregulator. One input of each amplifier is connected through a divider network to the IC internal +5-V reference. The output voltage of the Preregulator is monitored by the voltage divider at pin 2. The voltage drop across R907, produced by the Preregulator output current, is applied to the current limit amplifier at pin 16.

When the instrument is first turned on, the current limit amplifier controls the conduction time of Q9070. While Q9070 is conducting, the output current increases until a sufficiently large voltage drop is developed across R907 to invoke the current-limit mode. The current limit amplifier holds the output current below the current-limit threshold of approximately 1 A. When the voltage across C940 reaches approximately 43 V, the voltage amplifier starts controlling the duty cycle of Q9070 and the Preregulator will not limit current unless there is excessive current demand.

With Q9070 off, C907 charges to the output voltage of the Power Input circuit. When Q9070 turns on, current through the FET will come from the winding connected to pins 1 and 2 of T906 and from C907. Current to C907 is supplied by the winding connected to pins 4 and 5 of T906. When U930 shuts off Q9070, the collapsing magnetic field will raise the voltage at the anode of CR907. This diode then becomes forward biased and passes the currents supplied by C907 and the winding connected to pins 4 and 5 of T906. For this part of the cycle, current to C907 will be supplied by the winding connected to pins 1 and 2 of T906. This process will continue for each period of the oscillator, and the duty cycle controlling the conduction period of Q9070 will be altered as necessary to maintain 43 V across C940. To shut off Q9070 during each oscillator period, Q908 is used to discharge the gate-drain capacitance. Pin 10 of U930 goes LO, reverse biasing CR908 and turning on Q908 to shut off the FET.

Once the supply is running, power to U930 will be supplied from the winding connected to pins 6 and 7 of T906. Diode CR920 half-wave rectifies the voltage across pins 6 and 7 to keep filter capacitor C925 charged and to maintain supply voltage to U930 through Q930.

Instrument protection from excessive output voltage is supplied by silicon-controlled rectifier Q935. Should the Preregulator output voltage exceed 51 V, zener diode VR935 will conduct, causing Q935 to also conduct. The Preregulator output current will then be shunted through Q935, and the output voltage will very quickly go to zero. With the supply voltage of U930 no longer being provided by the winding connected to pins 6 and 7 of T906, the Preregulator will shut down and Q935 will be reset. The supply will then attempt to power up, but may again shut down if the overvoltage condition is again reached. This sequence continues until the overvoltage condition is corrected.

Inverter

The Inverter circuit changes the dc voltage from the Preregulator to ac for use by the supplies that are connected to the secondaries of T948.

The output of the Preregulator circuit is applied to the center tap of T948. Power-switching transistors Q946 and Q947 alternate conducting current from the Preregulator output through the primary windings of T948. The transistor switching action is controlled by T944, a saturating base-drive transformer.

When the instrument is first turned on, one of the switching transistors will start to conduct and its collector voltage will drop toward the common voltage level. This will induce a positive voltage from the lead of T944 which is connected to the base of the conducting transistor and reinforce conduction. Eventually T944 will saturate, and as the voltage across T944 (and T948) begins to reverse, the conducting transistor will cut off because of the drop in base drive. The other transistor will not start conduction until the voltage on the leads of T944 reverse enough to bias it on. This process will continue, and the saturation time of T944 plus the transistor-switching time will determine the frequency of Inverter operation (typically 20 kHz). After the initial Inverter start up, the switching transistors do not saturate; they remain in the active region during switching.

Diodes CR946 and CR947 serve as a negative-peak detector to generate a voltage for controlling the output of the error amplifier. Capacitor C943 charges to a voltage equal to the negative peak voltage at the collectors of Q946 and Q947, referenced to the Preregulator input voltage. This voltage level is applied to the divider composed of R937, R938, and R939. The error amplifier, composed of Q938 and Q939, is a differential amplifier that compares the reference voltage of VR943 with the voltage on the wiper of potentiometer R938. The current through Q939 will set the base drive of Q944 and thereby control the voltage on C944. This voltage will bias Q946 and Q947 to a level that will maintain the peak-to-peak input voltage of T948. The amplitude of the voltage across the transformer primary winding, and thus that of the secondary voltages of T948, is set by adjusting −8.6-V Adj potentiometer R938.

At turn on, Q938 is biased off and Q939 is biased on. All the current of the error amplifier will then go through Q939 to bias on Q944. Diode CR945 allows the base of Q944 to go positive enough to initially turn on Q946 or Q947. The current through Q944 controls the base drive for Q946 and Q947. Base current provided by base-drive transformer T944 will charge C944 negative with respect to the Inverter circuit floating ground (common) level.

Crt Supply

High-voltage multiplier U975 utilizes the 2-kV winding of T948 to generate 12 kV to drive the crt anode. It also uses an internal half-wave rectifier diode to produce −2 kV for the crt cathode. The −2-kV supply is filtered by a low-pass filter composed of C975, C976, R976, R978, and C979. Neon lamp DS870 protects against excessive voltage between the crt heater and crt cathode by conducting if the voltage exceeds approximately 75 V.

Focus Circuit

Focus voltage is also developed from the −2 kV supply via a voltage divider composed of R894, R892, FOCUS potentiometer R893, R891, R890, R889, R888, and Q885. The focus voltage tracks the A-intensity level through the action of Q885. The emitter voltage of Q804, set by the A INTENSITY control, is applied to the emitter of Q885 through R885. When the emitter voltage of Q804 changes, the current through Q885 changes proportionally and alters the voltage at one end of FOCUS control R893.

Low-Voltage Supplies and Fan

The low-voltage supplies utilize center-tapped secondary windings of T948. The +100-V supply uses CR954 and CR955 for rectification and C954 for filtering. Diodes CR956 and CR957 rectify ac from taps on the 100-V winding, and C956 filters the output to produce +30 V dc. The diode bridge consisting of CR960, CR961, CR962, and CR963 produces the +8.6-V and −8.6-V supplies. Filtering of the +8.6 V is accomplished by C960 and filtering of the -8.6 V is done by C961. Ac voltage from the +8.6-V primary is rectified by CR965 and filtered by C965 and R965 to provide power for the fan. The +5.0-V supply is produced by CR967, CR970, C968, L968, and C970.

Probe Adjust

The Probe Adjust circuitry, shown on diagram 6, utilizes a square-wave generator and a diode switching network to produce a negative-going square-wave signal at PROBE ADJUST connector J9900. Amplifier U985 is configured as a multivibrator with the time constant of R987 and C987 determining the oscillation period. When the output of the multivibrator is at the positive supply voltage, CR988 is forward biased. This reverse biases CR989 and the PROBE ADJUST connector signal is held at ground potential by R990. When the multivibrator output switches states and is at the negative supply voltage, CR988 is reverse biased. Diode CR989 will now be forward biased and the circuit output signal be approximately −0.5 V.

CTM

The CTM (Counter-Timer-Multimeter) circuitry of the 2236 Oscilloscope utilizes input signals from the three front-panel BNC connectors, the DMM leads, or the temperature probe to calculate and display CTM parameter results. Measurements that are a function of time use additional control signals from the oscilloscope.

CPU SYSTEM

The CPU (Central Processing Unit) system, shown on Diagram 12, forms the intelligent controller for the entire CTM board. It controls the counter and DMM, multiplexes the display, monitors the function switches, and performs calculations on measurement data.

The system is composed of U1400 (a 6802 microprocessor with its 128 bytes of internal RAM), two ROMs, and address decoding logic. The processor generates addresses for reading the ROMs and provides all ROM and input/output port enable signals.

Microprocessor Reset

The circuitry composed of Q1400, Q1401, U1403B, and U1403F resets the microprocessor when power is applied to the instrument. Initially C1400 is discharged when the power is first applied, and the microprocessor is held reset by U1403F. Transistor Q1400 is biased on, which biases off Q1401 and allows C1400 to charge through R1403. When the voltage across C1400 reaches the TTL input threshold level of U1403B, the output of U1403F will go HI and the microprocessor will begin to operate. When power is removed from the instrument, Q1401 will rapidly discharge C1400 to insure that a proper reset cycle will occur the next time power is applied. The CPU can be manually reset by temporarily shorting pins 1 and 2 of P1400 together.

CPU Clock and Interrupt Timing

The Clock and Interrupt Timing circuitry produces the CPU clock signal and a real-time interrupt signal.

A 5-MHz signal from the Oscillator circuitry is applied to flip-flop U1410A, which is configured as a divide-by-two counter. The Q output, running at 2.5 MHz, drives the CPU clock input and divide-by-two counter U1410B. The output of U1410B drives U1411 (which divides the signal by 4096), and U1411's output is inverted by U1403A and applied to the maskable interrupt input of the microprocessor through P1402. The interrupt signal has a repetition rate of about 600 Hz and is used primarily for multiplexing the display and scanning the front-panel pushbuttons. For troubleshooting purposes, P1402 can be removed to prevent the CPU from being interrupted. Inverter U1403C provides a reset signal to U1411 at the beginning of each interrupt cycle.

Address Decoding Logic

The two ROMs and the input/output ports are enabled by logic connected to the address and control lines of the CPU. ROM U1401 is enabled by U1405A, U1405B, and U1406D. ROM U1402 is enabled by U1405A, U1403E, U1404B, and U1406B. Demultiplexer U1407 is enabled by U1405A, U1405C, and U1404A; and U1408 is enabled by U1406C, U1405C, and U1404A.

ROM

The two ROMs, U1401 and U1402, contain all the CPU instructions and constant data for controlling measurements, calculations, and displaying results.

Different types of ROMs can be used depending on jumper setups. Jumpers W1401 and W1402 configure U1401, and W1400 configures U1402.

Buffered Data Bus Latch

The Buffered Data Bus Latch, U1409, is an 8-bit transparent latch used to buffer data from the CPU that is being sent to output ports. It is strobed by the E output of the CPU and latches whatever data is on the CPU data bus to provide data hold time for output operations. The latch is socketed so that it can be removed to isolate the CPU data bus from the output ports for troubleshooting purposes.

Counter Data Bus Switch

The Counter Data Bus switch S1400 is an octal switch that is used to isolate the CPU data bus from the counter read ports. The switches are used for troubleshooting purposes by isolating the counter read ports from the CPU data bus.

DISPLAY SYSTEM

The Display system, shown on Diagram 13, consists of decoding and latching circuitry, a filament driver, and the display panel with its digit and segment drivers. It is used to display measurement results and instrument status with a nine-byte buffer area in read-write memory containing the segment codes for the nine display digits. On every CPU interrupt, the firmware outputs the segment code for the next digit to be displayed.

Display Multiplexing

Display multiplexing sequentially selects the digits and the segments to be illuminated for display on the front-panel readout.

The digit display cycle begins with the CPU placing a LO on all data lines. Segment latch U1506 will transfer this data to the Q outputs when clocked by the Segment control line so that all digit segments are blanked. The CPU then increments the digit position to be displayed and outputs this number on the data bus. Digit latch U1504 will transfer this digit position to the Q outputs when clocked by the Digitreg control line. Demultiplexer U1505 will decode this number and drive the corresponding output line HI to enable the digit to be displayed. The CPU will then output on the data bus the segment code for the digit to be displayed, and U1506 will latch this data when clocked again by the Segment control line.

Drivers U1507 and U1508 convert the CMOS and TTL output levels from U1505 and U1506,respectively,to the 30-volt signal levels necessary to drive the display. Transistors Q1501, Q1502, and Q1503 provide level translation for the "a" segment of the display.

Display and Filament Driver

The display panel V9900 is a vacuum-fluorescent type and functions like a crt. The display filament (cathode) provides electrons which are accelerated by the control grid. To turn on a digit, the control grid is raised to a potential of about 30 volts. The segments (anodes) are coated with a phosphor and are illuminated when their potential is also 30 volts.

The filament driver provides the ac drive for the display filament. Since the brightness of a display digit is dependent on the cathode-to-anode voltage, the average dc voltage at all points on the filament must be the same (to keep the cathode-to-anode voltage the same for all digits). This is achieved by using a balanced push-pull driver, with the ac drive synchronized with the display multiplexing to prevent display flicker.

Whenever output pin 3 of U1505 goes HI to enable the far-left digit of the display, flip-flop U1509A is toggled and the filament drive reverses polarity. When the Q output of U1509A is HI, Q1504 and Q1506 are biased off and Q1505 and Q1507 are biased on. This causes current flow into the F2 terminal of V9900 and current flow out of the F1 terminal. When the flip-flop toggles into the opposite state, Q1504 and Q1506 turn on and Q1505 and Q1507 turn off, causing filament current flow in the reverse direction.

INPUT/OUTPUT PORTS

The Input/Output ports are the blocks used by the CPU (under firmware guidance) to control the CTM hardware, to read counter contents and status, and to sense the front-panel switch positions.

Sample Counter Read Ports

The Sample Counter Read Ports, shown on Diagram 11, are three 8-bit input ports for reading the sample counter contents and the Busy control line status and consist of tri-state buffers U1104, U1105, U1106, and U1107. Reading address B000 gets the least-significant byte of the sample counter by enabling U1104 and two of the six buffers of U1105. The middle byte is obtained by reading address B001 and enabling the remaining four buffers of U1105 and four buffers of U1106. The most-significant 7 bits of the counter and the Busy control line status are obtained by reading address B002 to enable the remaining two buffers of U1106 and all buffers of U1107.

Time Counter Read Ports

The Time Counter Read Ports, composed of U1203, U1204, U1205, and U1206, are functionally identical to the Sample Counter Read Ports except that they read in the time counter contents and the Agate Sense line status. The least-significant counter byte is at address B003, the middle byte is at B004, and the most-significant 7 bits of the counter are at B005 with the most-significant bit of port B005 being the Agate Sense line.

Pushbutton Read Port

The Pushbutton Read Port, shown on Diagram 13, is an 8-bit input port that is used to read the CTM front-panel pushbutton settings and the $\overline{\text{Totrst}}$ status line. The port consists of U1500, an 8-wide tri-state buffer, and is enabled by the $\overline{\text{Xr0}}$ control line when address B006 is on the address lines.

Oscilloscope Read Port and Probe Decoder

The Oscilloscope Read Port is a 6-bit input port that is used to read the B Gate Sense line status, the $\overline{\text{A Only}}$ line status, and four Channel 1 status lines. This input port consists of U1501, a 6-wide tri-state buffer, and is enabled by address B007.

The 1X-10X Probe Decoder circuit, connected to pin 10 of U1501, is used to indicate when a 10X probe is connected to the Channel 1 BNC input connector. If a 1X probe (or no probe) is connected, the Ch 1 Probe Code input line is floating and Q1500 is biased on to place a LO on pin 10. If a 10X probe is connected, a resistor inside the probe is connected between the Ch 1 Probe Code input line and ground. This resistor pulls the base voltage of Q1500 low enough to cause the transistor to turn off and a HI to be placed on pin 10. Diode CR1500 and R1524 protect the circuit from static discharge.

Counter Control Latch

The Counter Control Latch is an 8-bit output port used to control the Counter circuitry. It consists of flip-flop U1502, inverters U1006D and U1006E, CMOS-to-ECL level-shifter CR1100, and R1110 which converts from TTL to CMOS levels.

DMM Control Latch

The DMM Control Latch is a 4-bit output port of which only 3 bits are used. Two of the bits form the serial interface with the DMM hardware, and the third bit is used to turn the audio transducer on and off. This port consists of U1503, a quad flip-flop, and is clocked by the Dmmlink control line. Resistors R1521, R1522, and R1523 perform a TTL-to-ECL level conversion of the least-significant output bit of the latch to produce the Test Sig input to the Input Multiplexer of the Counter.

Audio Transducer

The Audio Transducer circuit utilizes beeper LS1801, which contains a piezo-electric element. The processor enables the beaper by strobing a HI to the 3Q output of U1503 to bias on Q1809. The frequency of the beeper is determined by the piezo-electric element and the amplitude by the magnitude of the dc voltage across its terminals. Thus the volume is controlled by Volume potentiometer R1832 which varies the dc voltage at the beeper – input.

COUNTER SYSTEM

The Counter system (under firmware control) measures the period or width of signals that are selected by the Input Multiplexer. The system consists of a time base, two count chains, a synchronizer, and an input multiplexer.

Input Multiplexer

The Input Multiplexer circuit, shown on Diagram 10, selects one of five ECL-compatible inputs (Testsig, V/F Output, Dtime, Atrig, or Btrig) and applies it to the Synchronizer. It is composed of five signal switches, a decoder to turn the switches on or off, and a Schmitt buffer amplifier.

Transistors Q1001, Q1002, Q1003, Q1004, and Q1005 perform the signal switching. If the base of one of these transistors is raised to 5 volts, the switch is turned off; and if the base is grounded, the switch is turned on.

The decoder portion of the multiplexer, composed of U1005 and Q1006, turns on one of the switching transistors as determined by control signals Is0, Is1, and Barm. If Barm is LO, U1005 is enabled and Q1006 is turned off to bias off Q1005. One of the four switches controlled by U1005 will then be turned on as determined by Is0 and Is1. If Barm is HI, Q1006 will be turned on to bias on Q1005. Also, U1005 will be disabled and cause the four switches it controls to stay turned off.

Buffering is performed by U1002A, which, in conjunction with the positive feedback provided by R1050, forms a Schmitt amplifier. This amplifier squares-up input signals which may have slow rise and fall times.

Synchronizer

The Synchronizer circuitry is used for gating signals from the Input Multiplexer and the 100 MHz reference clock to the two count chains. It is configured under firmware control for period or width measurements in both gated and nongated modes. The operation of this circuit is described below for each of the four measurement modes.

See Figure 3-6 for a simplified circuit diagram of period measurement operation. Figures 3-7 and 3-8 show circuit waveforms for nongated and gated measurements respectively.

NONGATED PERIOD. In this mode, the sample counter chain counts the number of periods of the synchronizer input signal that occur while the $\overline{\text{Enable}}$ signal is LO, and the time counter chain will count the number of periods of the 100 MHz clock during the same interval.

The Barm signal is LO and Q1006 is biased off. This places a HI on one input of U1004A through CR1004 and the gate output will be LO. The Enable signal is inverted by U1006C and is passed through CR1003 and U1004C. The D input of U1001A will therefore receive the complement of the Enable signal.

The Width signal is LO, causing the output of U1006B to be HI and the output of U1006A to be LO. Input pin 9 of U1004B is driven HI by CR1002 and causes the gate output to be LO. Also, input pin 9 of U1002A is driven LO by CR1001 to cause the gate to function as a noninverting buffer. The output of the Input Multiplexer drives the clock input of U1001A, and since Q1012 is biased on by U1006A, it also drives one input of U1003B. Transistor Q1011 is biased off by U1006B.

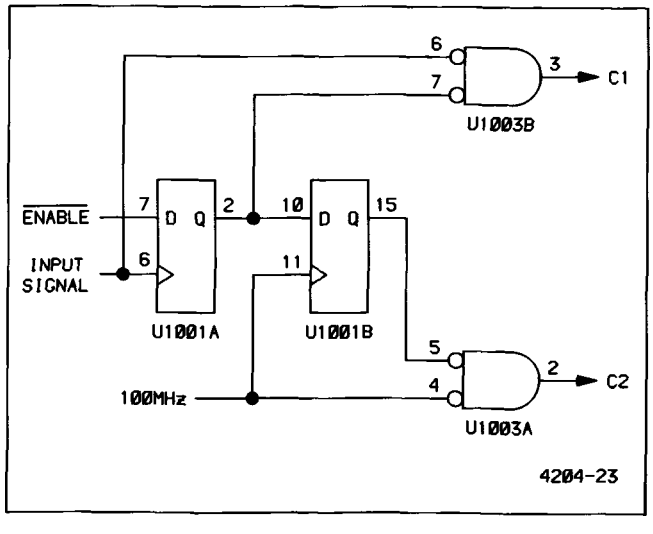

Figure 3-6. Simplified diagram of the Period measurement circuitry.

The reset signals Ereset and Creset always work in tandem so that flip-flop U1001A can be preset by Q1010 at the same time that flip-flop U1001B is preset.

Input pin 12 of U1003C is effectively disconnected, since Q1011 is biased off. The Q output signal of U1001A is coupled through U1003C to drive the D input of U1001B and one input of U1003B. Transistors Q1008 and Q1009 form an ECL-to-TTL level translator to produce the Busy signal.

When the $\overline{\text{Enable}}$ signal goes LO, the next positive transition of the synchronizer input signal will cause the Q output of U1001A to go LO. The Q output of U1001B will then go LO after the next positive transition of the 100 MHz clock. This allows U1003B to pass an inverted version of the synchronizer input signal and U1003C to pass an inverted version of the 100 MHz clock. The two count chains both increment on each positive transition applied to them.

When the $\overline{\text{Enable}}$ signal goes HI again, the next positive transition of the synchronizer input signal will cause the Q output of U1001A to go HI. The Q output of U1001B will then go HI on the next positive transition of the 100 MHz clock. This disables U1003B and U1003C from passing their respective signals to the count chains.

The period of the synchronizer input signal is calculated by the firmware that divides the time count by the sample count. To calculate frequency, the firmware divides the sample count by the time count.

GATED PERIOD. For this mode of operation, the circuitry functions almost identically to the Nongated Period mode. However, the measurement periods are broken up into one or more time periods determined by the oscilloscope sweep logic through the $\overline{\text{Delay End}}$ signal.

The measurement starts at the end of the oscilloscope delay interval after the Enable signal has gone HI. The $\overline{\text{Delay End}}$ signal goes LO at the end of the delay interval and B Sweep triggering is enabled. Transistor Q1007 inverts the $\overline{\text{Delay End}}$ signal and applies it to pin 4 of U1004A. The Barm signal is HI and Q1006 is biased on to

place a LO on pin 5 of U1004A. The output of U1004A will therefore be the $\overline{\text{Delay End}}$ signal and will be applied to pin 13 of U1004C. Whenever Enable is HI, the $\overline{\text{Delay End}}$ signal will drive the D input of Q1001A.

The two counter chains will be enabled for counting whenever the D input of U1001A is LO. This will occur between the end of the delay interval and the end of the B Sweep. Signal routing to the counters is the same as that described in the "Nongated Period" section.

See Figure 3-9 for a simplified circuit diagram for width measurement operation and Figure 3-10 for circuit waveforms.

NONGATED WIDTH. In this mode, the Width signal is HI, which results in Q1012 being biased off and Q1011 being biased on. Pin 9 of U1004B is LO and pin 9 of U1002B is HI,which configures U1002B as an inverting buffer. Since Q1011 is on, the output of U1002B will drive pin 12 of U1003C. The D input of U1001A is driven by $\overline{\text{Enable}}$, and U1004B pin 11 is driven by Enable.

When Enable goes HI, the next positive transition of the synchronizer input signal clocks the Q output of U1001A LO. The output of U1003C is then the complement of the synchronizer input signal as long as Enable remains HI. Enable being HI also causes pin 15 of U1004C to go LO. The Q output of U1001B will track with its D input, synchronous

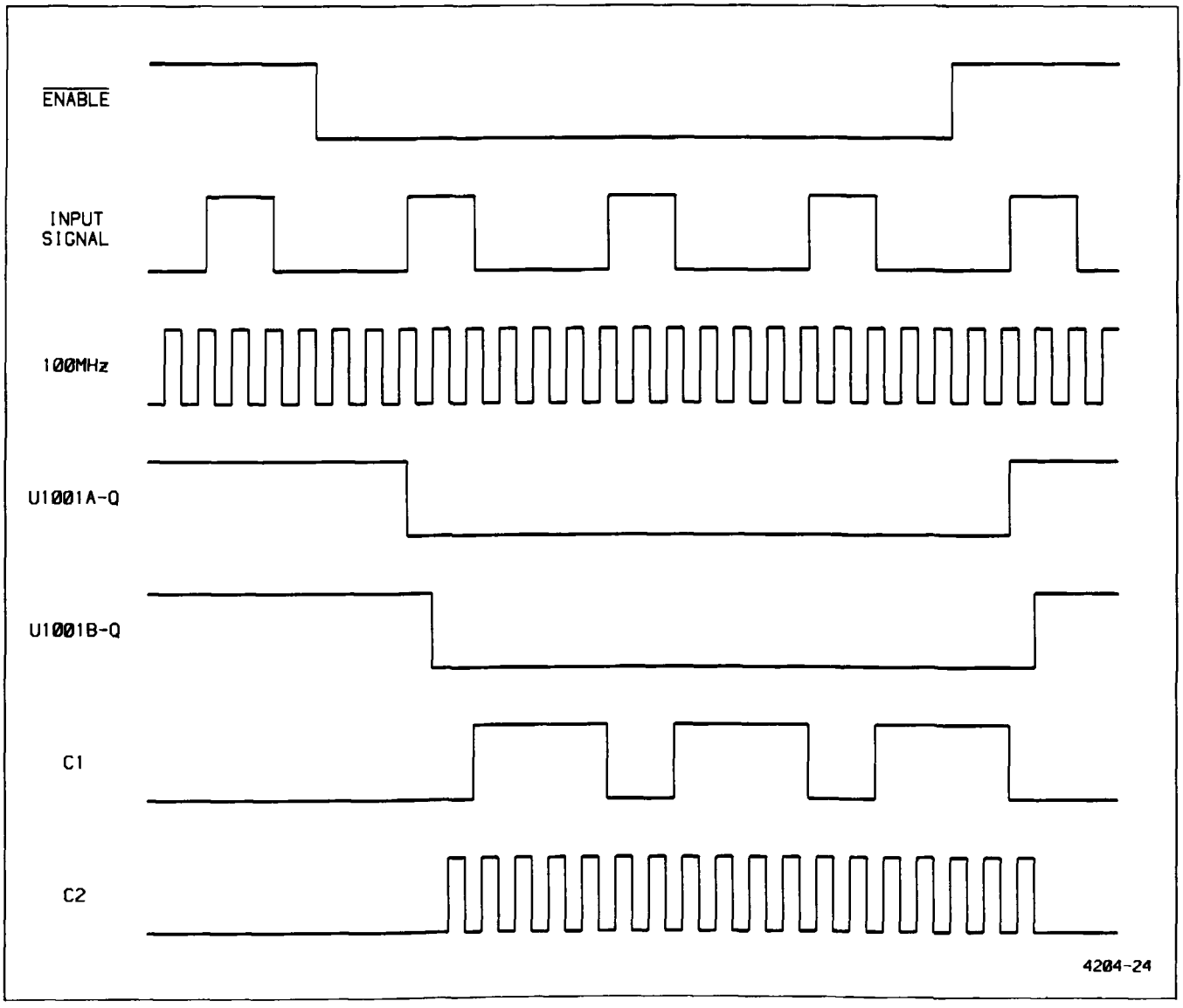

Figure 3-7. Typical waveforms for the Nongated Period function.

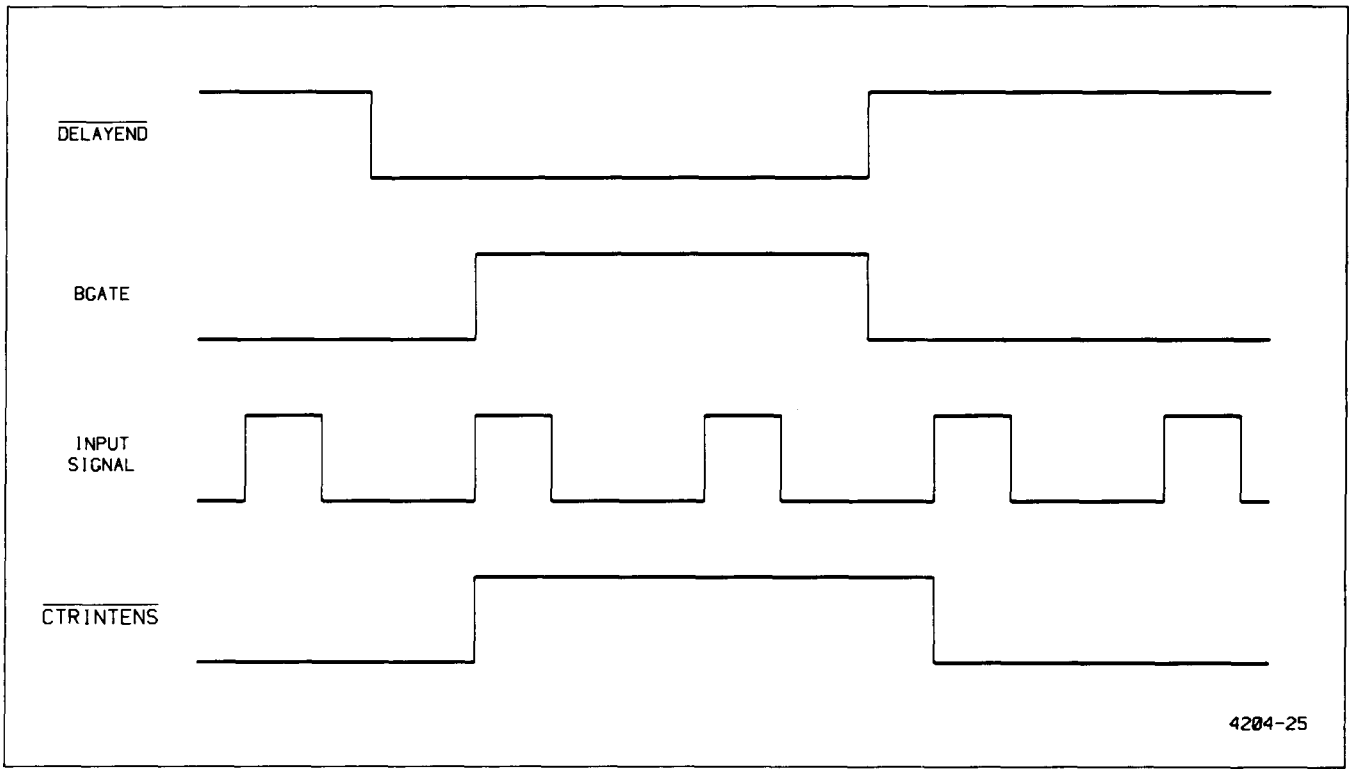

Figure 3-8. Typical waveforms for the Gated Period function.

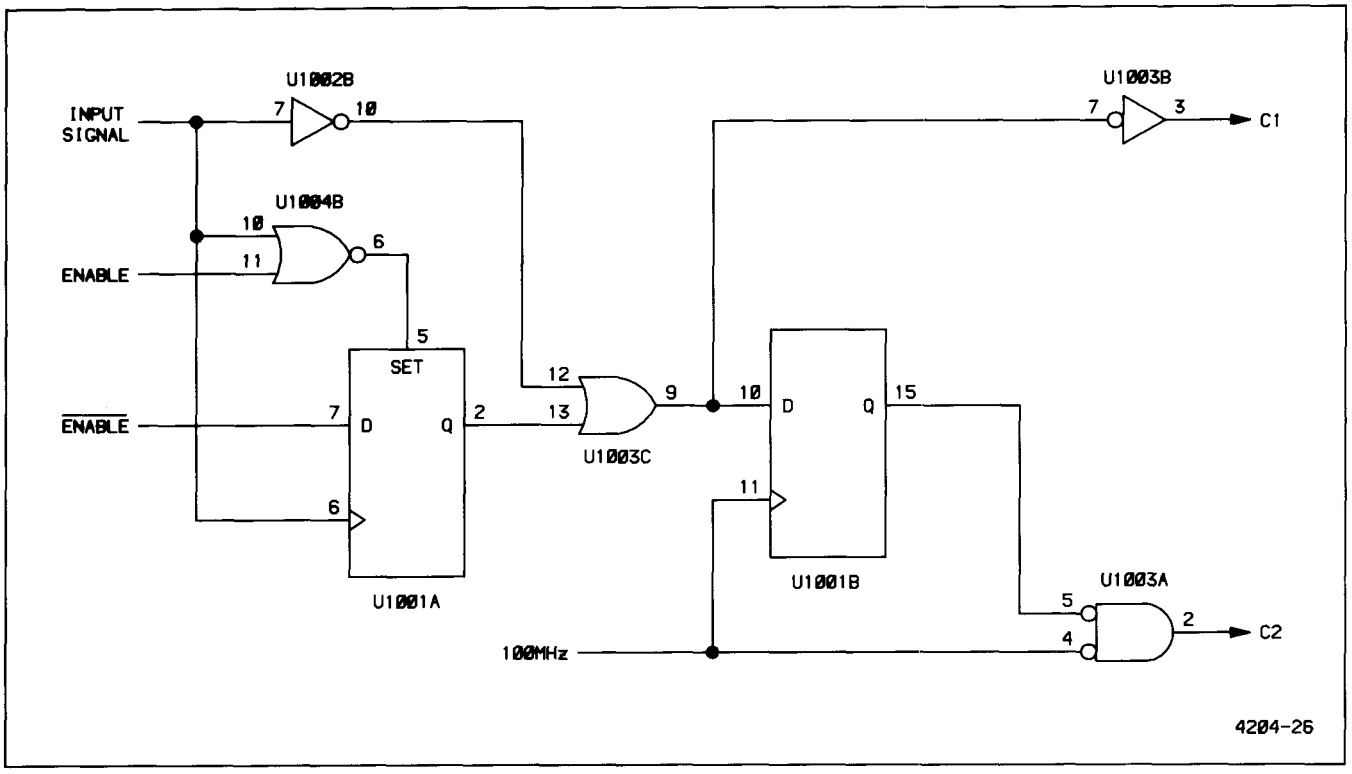

Figure 3-9. Simplified diagram of the Width measurement circuitry.

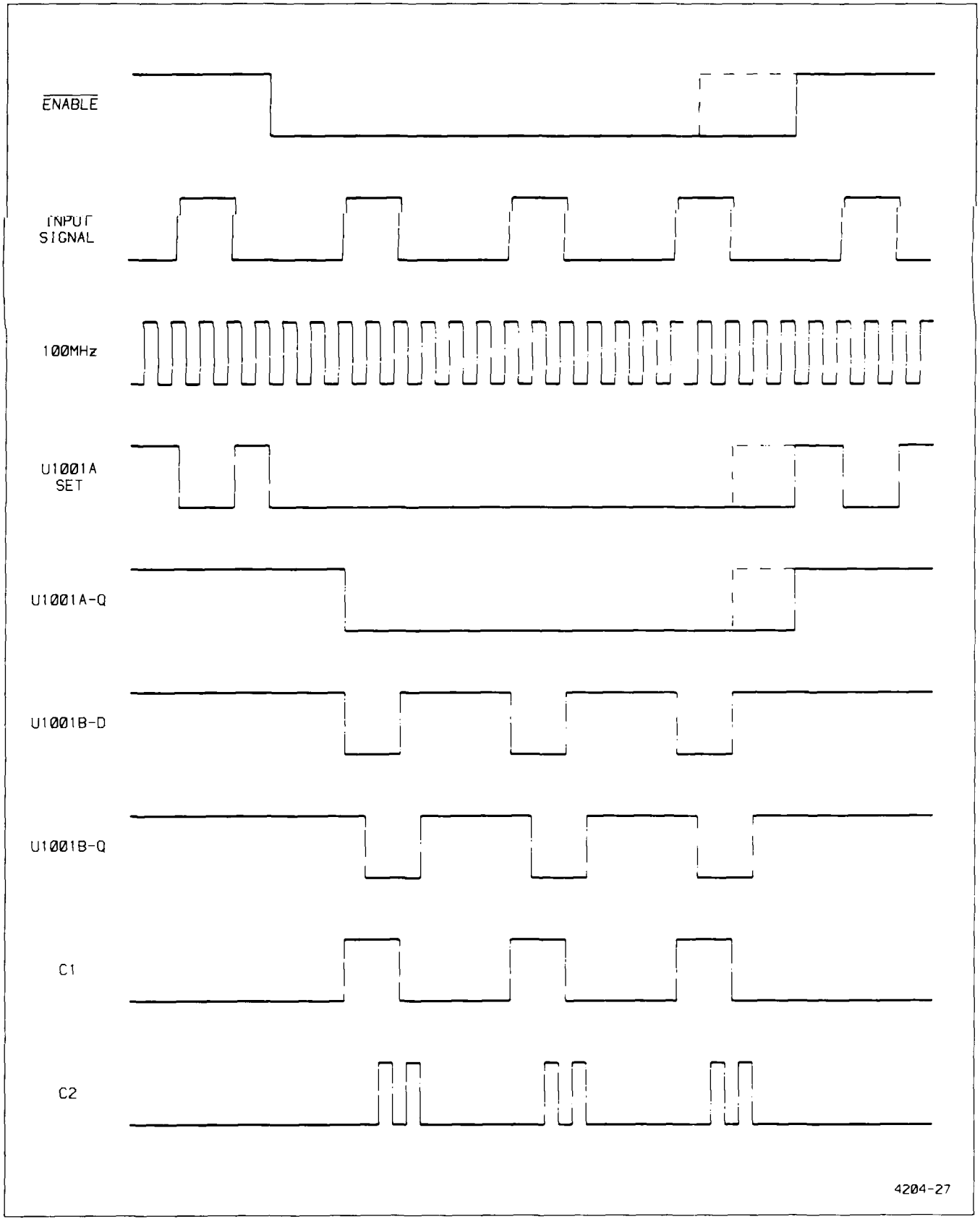

Figure 3-10. Typical waveforms for the Width function.

with the 100 MHz clock, and 100-MHz pulses will be passed to the time counter. Since pin 6 of U1003B is LO, the gate functions as an inverter and passes the synchronizer input signal to the sample counter.

If Enable goes LO between positive pulses of the synchronizer input signal, U1001A will be immediately set and prevent any more sample or time counts from being accumulated. If Enable goes LO in the middle of a positive pulse, U1001A won't be set by U1004B until the falling edge of that pulse occurs.

The width of the synchronizer input pulse is calculated by the firmware, with the time counter chain result being divided by the sample counter chain result.

GATED WIDTH. In this mode, the circuitry functions in the same manner as the Nongated Width mode except that the two counter chains are enabled for counting by the $\overline{\text{Delay End}}$ signal. The Enable signal is used to gate the $\overline{\text{Delay End}}$ signal to the synchronizer.

Jumper P1000 is used to route the sample counter input to the time counter input when in the TEST position.

Oscillators

The 2236 is equipped with either the standard crystal oscillator or an optional temperature-compensated crystal oscillator. The circuits produce a precision 5-MHz frequency source for the phase-locked loop.

STANDARD CRYSTAL OSCILLATOR. The standard crystal oscillator consists of a 10-MHz oscillator, a buffer, and a divider to produce the 5-MHz signal.

Common-emitter amplifier Q1303 has crystal Y1300 connected between its collector and base. With the transistor providing the necessary gain, the circuit will oscillate at a frequency that is a function of the total external capacitance. This capacitance is supplied by C1307, C1308, and C1311 which fine-tunes the oscillator frequency. Emitter-follower transistor Q1304 buffers the output of the oscillator and drives the clock input of U1303A. This flip-flop divides the oscillator output frequency by two so that the output of the circuit is a 5-MHz signal.

OPTIONAL TCXO OSCILLATOR. This circuit produces a high-precision 5-MHz signal using a temperature-compensated crystal oscillator. A screw adjustment in the oscillator unit alters the output frequency, and the oscillator uses a regulated 15-V power source which is derived from the 30-V supply by U1305.

Phase-Locked Loop

The Phase-locked Loop circuit produces a 100-MHz output signal from either 5-MHz oscillator. It consists of a phase comparator, a low-pass filter, a vco (voltage controlled oscillator), and a frequency divider.

PHASE COMPARATOR. The phase comparator, consisting of U1300A, compares the 5-MHz oscillator signal to the output of the frequency divider. Any phase difference between the two signals will produce voltage pulses at output pins 2 and 13. These pulses are converted by U1300B to current pulses and are applied to the low-pass filter.

LOW-PASS FILTER. The low-pass filter, consisting of U1300C and Q1300, converts the current output pulses of U1300B to a dc voltage at the circuit output. Transistors Q1300A and Q1300B serve as a high-input-impedance voltage follower and U1300C serves as a voltage gain stage.

VOLTAGE-CONTROLLED OSCILLATOR. The vco consists of U1301, L1300, C1304, and CR1300. Voltage-variable capacitance diode CR1300, C1304, and L1300 form a resonant tank circuit. By changing the dc voltage on the diode cathode, the resonant frequency of the tank can be changed to alter the oscillator output frequency to maintain a 100-MHz output.

FREQUENCY DIVIDER. The frequency divider consists of U1302, U1303B, Q1301, and Q1302. Bi-quinary counter U1302 divides the output of the vco by 10, and Q1301 and Q1302 form an ECL-to-TTL level translator to drive U1303B. The output of divide-by-two U1303B is a 5-MHz signal which is compared against the oscillator output by the phase-locked loop circuit.

Sample and Time Counter Chains

The two counter chains, shown on Diagram 11, are both 23-bit binary up-counters. Since the two counter chains function in the same manner, only the sample counter chain will be discussed.

The first two stages of the counter are implemented by U1100 which contains two ECL flip-flops. Since the next counter stage and the counter read port U1104 are TTL, the two counter outputs are level translated by Q1100, Q1101, Q1102, and Q1103. The 3rd stage is implemented by U1101B, the 4th through 7th by U1102A, the 8th through 11th by U1102B, and the 12th through 23rd by U1103.

All the flip-flops are reset at the start of a measurement by the Treset signal. Inverters U1006D and U1006E level

shift the reset signal to reset U1103, and CR1100 is used to reset U1100.

Jumper P1100 is used to split the counter into two shorter length counters. This reduces the amount of time necessary to fill the counters and is used for troubleshooting purposes.

SCOPE SWEEP SYSTEM INTERFACE

The oscilloscope sweep system interface, shown on Diagram 10, utilizes signals from the oscilloscope sweep system to perform delay and delta time measurements and to control the intensified zone during gated measurements. It consists of the digital and analog sections of the delay/delta time controller and the intensified zone controller.

Delay/Delta Time Controller-Digital Section

The digital section converts the oscilloscope delay time interval to a pulse width for the counter to measure and provides status information to the firmware. This interval is the time from the rising edge of the A Gate signal to the falling edge of the $\overline{\text{B Gate}}$ signal. The A Gate signal is buffered by U1700C and U1700D and drives the clock inputs of U1600A and the two sections of U1602. The $\overline{\text{B Gate}}$ signal is buffered by U1700B and is coupled to the reset input of U1602B through U1700A. To initialize U1602B to a known state before starting a measurement, the Treset signal is also coupled to the reset input of U1602B through U1700A. Therefore, A Gate sets U1602B and $\overline{\text{B Gate}}$ resets it, so that the $\overline{\text{Q}}$ output is a negative-going pulse whose width is the delay time interval to be measured.

Two signals, A Gate Sense and B Gate Sense, are used by the counter to indicate that valid sweeps have occurred. Flip-flop U1602A is clocked by A Gate to indicate to the firmware that the counter received a valid A Gate signal and is initialized by resetting it with $\overline{\text{Treset}}$. The Dmode0 signal is LO for a short delay measurement and HI for a long delay measurement in delta time mode, and is always LO for normal delay measurements. The Dmode1 signal is HI for a delta time measurment and LO for a delay time measurement.

Flip-flop U1509B is clocked on the falling edge of the $\overline{\text{B Gate}}$ signal. The Q output will go HI on the $\overline{\text{B Gate}}$ falling edge if the J input is HI and indicates that a valid B Sweep for the desired measurement has occurred. If the J input is LO, the Q output won't change. The J input will go HI if the following conditions are met: the Q output of U1602A is HI, and either the Dmode0 signal or U1601 pin 7 is LO. Transistor Q1604 will then be biased on and the J input of U1509B will be HI. Resetting of U1509A is accomplished by the Creset line.

The $\overline{\text{Q}}$ output of U1602B is applied to the circuit consisting of R1609, C1600, R1607, and R1608, which converts the TTL levels to ECL levels and drives one input of U1003D. The other input of U1003D is driven by a circuit which selects the proper time interval to be measured for each of the vertical modes, and selects between Delay and Delta Time modes as described below.

See Figures 3-11 and 3-12 for Delay Time circuit waveforms with $\overline{\text{Valt}}$ HI and LO respecitively.

DELAY TIME. The firmware in the Delay Time mode sets Dmode0 and Dmode1 LO. This causes pin 15 of U1002C to be driven HI. If the VERTICAL MODE switch is set to CH1, CH2, ADD or CHOP, then the $\overline{\text{Valt}}$ line will be HI. This causes U1601 to apply the 1a and 1b inputs to the Ya and Yb outputs respectively. Therefore, $\overline{\text{Dly2}}$ is HI, forcing the analog section to only pass the Dt Wiper signal. The Ya output of U1601 gets converted to ECL levels by R1602, R1603, and R1604, and is applied to pin 14 of U1002C. Since both pins 14 and 15 of U1002C are driven HI, the output will be LO, causing U1003D to pass the delay time pulse to the counter.

If the VERTICAL MODE switch is in the ALT position, the $\overline{\text{Valt}}$ signal is LO. Thus U1601 continues to keep $\overline{\text{Dly2}}$ HI, but the Ya output of U1601 passes the Ch1 Selected signal. This causes U1002C and U1003D to pass only those delay time pulses that are generated for the Channel 1 display.

See Figures 3-13 and 3-14 for Delta Time circuit waveforms with $\overline{\text{Valt}}$ HI and LO respectively.

DELTA TIME. The firmware for the Delta Time mode sets the Dmode1 line HI. The outputs of U1601 will be either the 2a and 2b inputs or the 3a and 3b inputs, depending on the logic level of $\overline{\text{Valt}}$. The $\overline{\text{Valt}}$ signal is HI when the VERTICAL MODE switch is set to CH1, CH2, ADD or CHOP, and the output of U1600B is applied to U1002C and the analog section.

The two sections of U1600 divide the A Gate signal by four to cause $\overline{\text{Dly2}}$ to change logic levels every other A Sweep. When $\overline{\text{Dly2}}$ is LO, the analog section sums the Delta TIME POSITION and B DELAY TIME POSITION wiper voltages and causes the intensified zone to shift to the right of its normal position. As a result, two intensified zones are displayed.

The output of U1600B also drives pin 14 of U1002C through U1601. The firmware selects which of two intervals to measure by setting Dmode0 appropriately. When Dmode0 is LO, pin 15 of U1002C is HI, causing U1003D to

gate an interval only when pin 14 of U1002C is HI. This is the shorter of the two delay periods. When the firmware wants to measure the longer delay, Dmode0 is set HI, which causes U1003D to gate an interval only when pin 14 of U1002C is LO, thereby selecting the second delay.

If the VERTICAL MODE switch is in the ALT position, $\overline{\text{Valt}}$ is LO and U1601 gates the Ch 1 Selected signal to U1002C. Circuit operation is identical to that described above except that Ch 1 Selected toggles at twice the repetition rate of the output of U1600B.

Delay/Delta Time Controller-Analog Section

The analog section operates in one of two modes, depending on the level of the $\overline{\text{Dly2}}$ signal. When $\overline{\text{Dly2}}$ is HI, Q1601 is biased off, which causes Q1603 to also be biased off. Since there is no voltage drop across R1617, only the DT Wiper signal is applied to voltage-follower U1604B through U1604A.

If $\overline{\text{Dly2}}$ is LO, then Q1601 and Q1603 are biased on. Transistor Q1602 serves as a constant current source for zener-diode VR1601. The diode voltage will be applied across R1617 so that the Δ TIME POSITION pot wiper voltage is then summed with the DT Wiper voltage and applied to U1604B.

Intensified Zone Controller

Controller IC U1603 selects the proper signal for controlling the intensified zone. If the CTM is not set up in a gated mode, then Barm is LO and the B Gate signal is connected to Ctrintens. The intensified zone is not affected by the CTM.

If the CTM is in a gated mode and the oscilloscope is in the B Runs After Delay mode, then Brun is HI and B Gate is coupled to Ctrintens. If the oscilloscope is in the B Triggerable After Delay mode, then Brun is LO and the counter gate signal (Busy) is connected to Ctrintens.

DMM

The DMM circuitry, shown on Diagrams 8 and 9, measures dc volts, rms ac volts, and resistance using the DMM leads connected on the side of the cabinet. Additionally, dc and rms ac volts may also be measured using the CH 1 OR X & DMM input connector. Parameter functions are chosen using the front-panel pushbuttons and the Channel 1 Input Coupling switch. Values are then displayed on the seven-segment vacuum fluorescent readout.

An input switching network controls signal selection and conditioning and its output is buffered by an amplifier with a

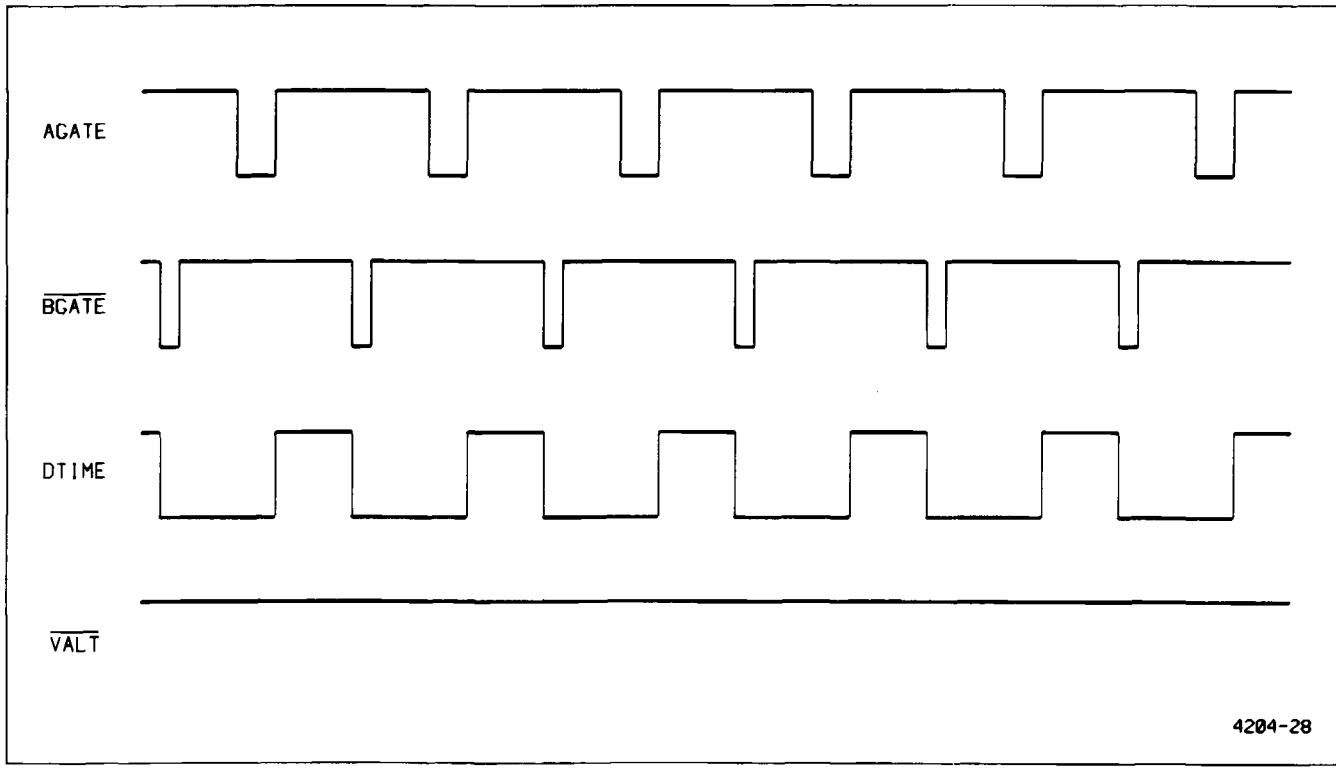

Figure 3-11. Typical waveforms for the Delay function with $\overline{\text{Valt}}$ HI.

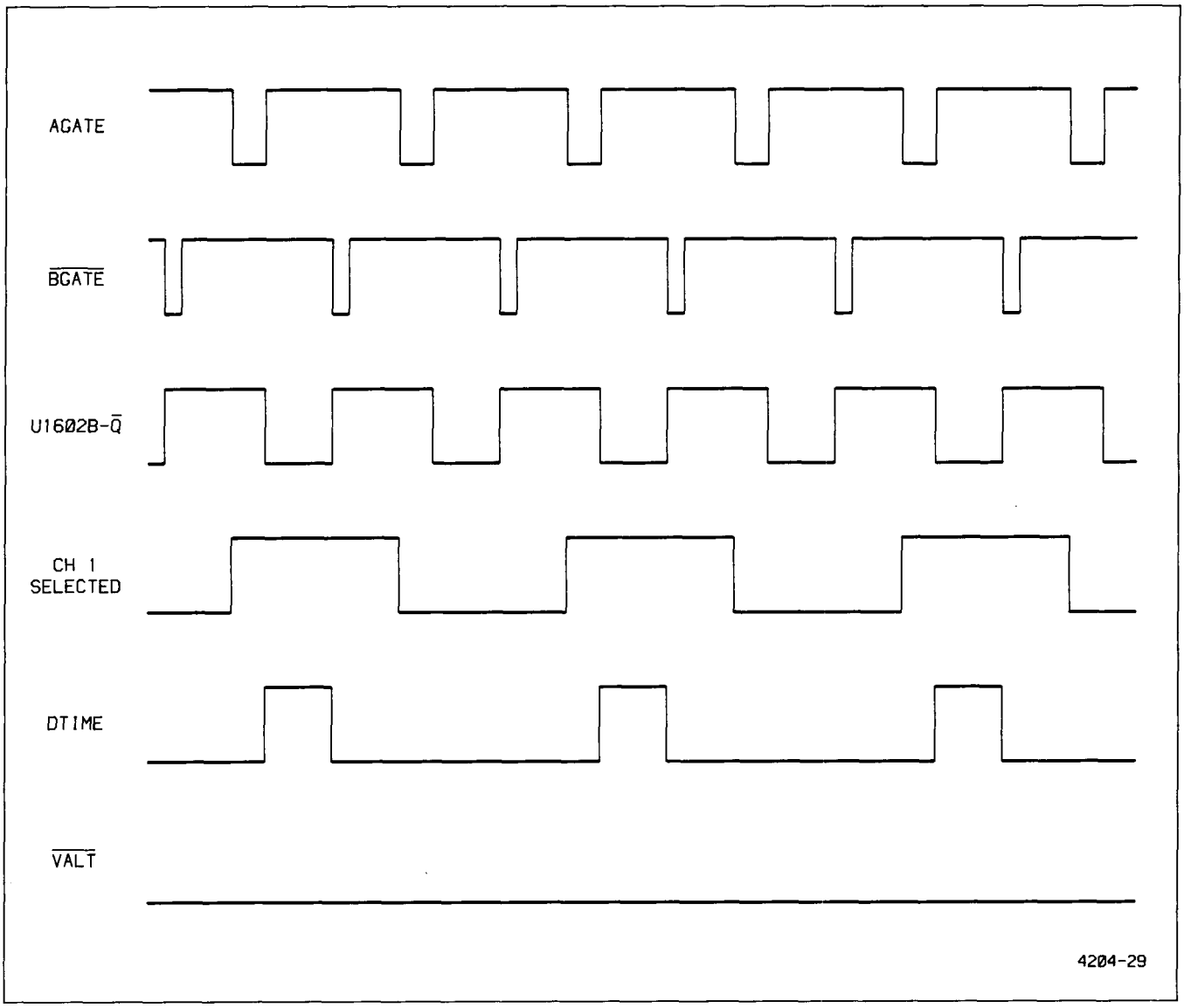

Figure 3-12. Typical waveforms for the Delay function with $\overline{\text{Valt}}$ LO.

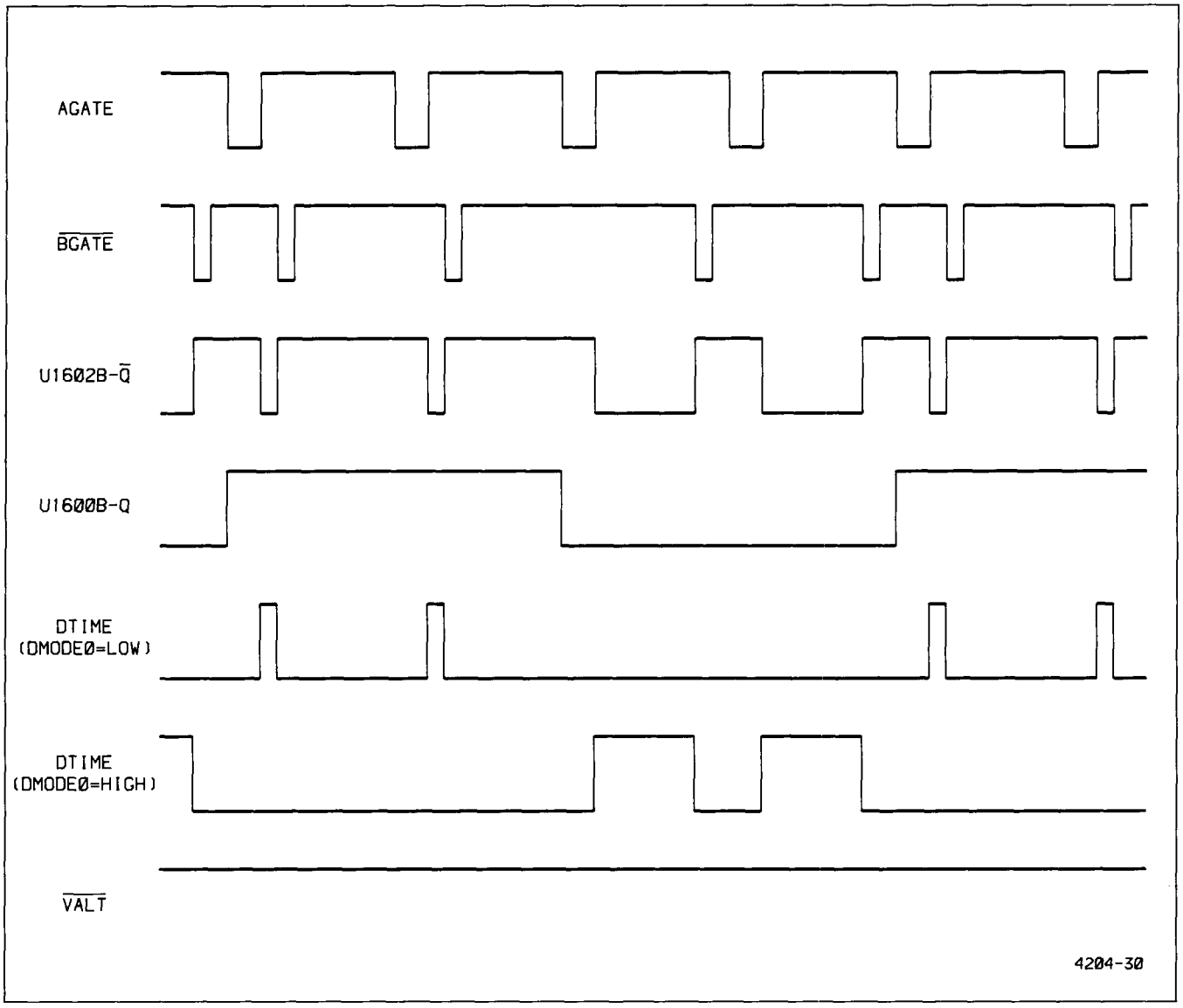

Figure 3-13. Typical waveforms for the Delta Time function with $\overline{Valt}$ HI.

high-impedance input. If the input voltage is ac, an rms ac converter is used to produce a corresponding dc-output voltage.

The output voltage from the buffer amplifier or the rms ac converter along with functional-reference voltages and a ground-reference voltage are multiplexed under microprocessor control. These signals then go through a ÷1 or ÷5 attenuator and are converted to output frequencies. These frequencies are accessed by the CPU through the Counter section to determine the magnitude of the input signal. The CPU will alter the DMM input circuit configuration as necessary so that the measurement range will correspond to the magnitude of the input parameter.

Input Switching Network

Input signals to the DMM are selected and conditioned by the Input Switching Network. The position of the UPPER FUNCTIONS-LOWER FUNCTIONS button determines both the Input Filter configuration and, in combination with the other five control buttons, the function to be implemented.

Input switching is accomplished by S1801A, S1801C, and S1802. Switch S1802 configures the input signal path to either include or bypass blocking capacitor C1801, and S1801A connects as a circuit reference either the DMM common or the ohms reference supply. A direct path from the + MULTIMETER INPUTS connector to the Input Filter for resistance measurements is also provided by S1801A.

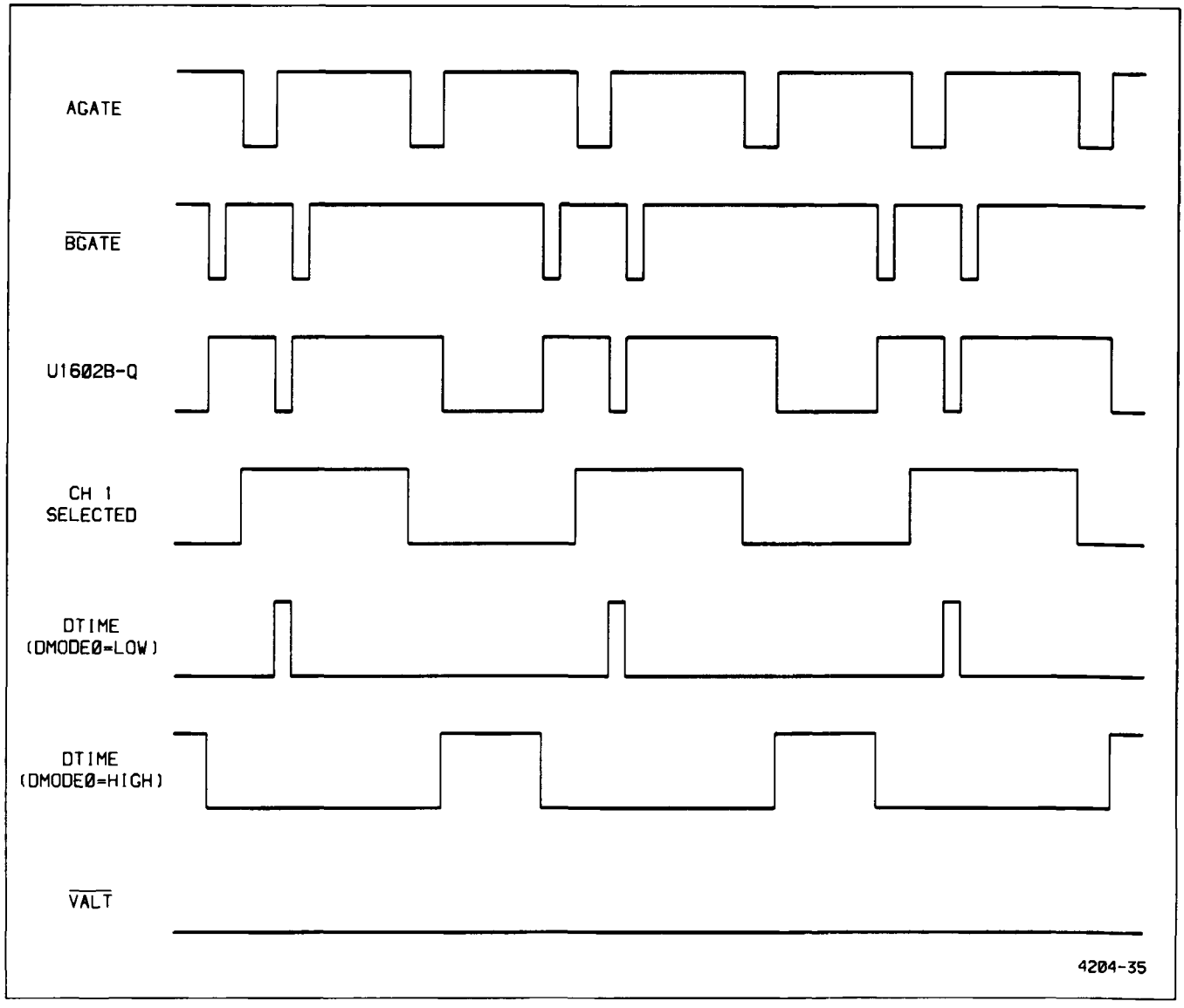

Figure 3-14. Typical waveforms for the Delta Time function with $\overline{\text{Valt}}$ LO.

Ac compensation of the divider network is provided by C1827. See the "Ac Compensation" section for circuit operation.

The FREQ, Δ TIME, PER, DLY TIME, and WIDTH functions do not use the DMM circuitry. Their push button switches S1801C, S1801D, and S1801E communicate to the Counter section their positions by grounding or floating the signal line connected each switch at pin 1. When choosing the CH 1 V and WIDTH functions, the DMM ground is connected to chassis ground through R1805. The shield of the signal cable from the Channel 1 Attenuator is also connected to chassis ground and the LO lead of the DMM is disconnected from the input circuitry.

DMM. Input voltages from the DMM leads are applied to the divider composed of R1801 and filter capacitors C1802, C1804A, C1804B, and C1804C. The output of each divider stage is connected through a relay to the Input Filter or directly to the Input Buffer through RT1806 depending upon the UPPER FUNCTIONS-LOWER FUNCTIONS pushbutton position. The relays, K1801, K1802, K1803, and K1804, are under microprocessor control so that a particular divider stage output can be selected dependent upon the magnitude of the input voltage. For dc input voltages, R1801 will divide down the dc level and the capacitors will have no effect. For ac signals, the capacitor section of the divider network will be the predominant part of the divider as the input frequency increases. Ohms measurements are made with the divider network functioning as a single programmable resistor whose value is altered by the relay switch positions. The values range from 1 kΩ with K1801S closed to 10 MΩ with all relay contacts open.

CHANNEL 1 VOLTS. The CH 1 V function sets the positions of S1801C such that the Ch 1 signal is connected through rf chokes L1801 and L1802 to the Input Buffer through RT1806 and C1808, and the DMM reference is connected to chassis ground through R1805. Potentiometer R1802 and resistor R1803 sources current to R20 in the Channel 1 Attenuator circuitry to adjust for any input offsets in the Channel 1 Volts signal path. Dc and rms ac voltages from the Channel 1 input connector can then be read by the DMM and their magnitudes displayed on the front-panel display. Input signal attenuation is controlled by the CH 1 VOLTS/DIV switch position.

Input Filter

The Input Filter is configured as a two section low-pass filter and is enabled by the front-panel FUNCTIONS buttons.

The UPPER FUNCTIONS position enables filtering of the input signal to the Input Buffer. The filter network composed of R1809, R1810, C1807, and C1808 becomes functional when one end each of C1807 and C1808 are grounded. Switch leakage is prevented by guarding RT1806.

With LOWER FUNCTIONS selected, the input signal is routed to the Input Buffer through RT1806, C1807, and C1808, with all frequencies being passed without attenuation. Series limiting of the input signal during periods of overload is provided by RT1806 and R1807.

Input Buffer

The Input Buffer is a unity-gain amplifier that isolates the Input Filter from the loading effects of the AC Amplifier and the Voltage-to-Frequency Converter. It is composed of unity-gain follower U1802 and dc-correction amplifier U1803. The circuit output is at the output of U1802.

Diodes VR1801, VR1802, CR1805, CR1806, and resistor R1812 form a symmetrical input clamp. Resistor R1812 will apply the circuit output voltage which is about the same as the circuit input voltage to the cathode of VR1801. For input signals between −5.7 V and +5.7 V, no voltage drop exists across CR1805 and CR1806 so no diode leakage current can develop which would add to the circuit input current and produce errors. When the input voltage is outside of this range, CR1805 or CR1806 will conduct to forward bias CR1805 or CR1806. The input voltage will then be clamped at either + 6.4 V or −6.4 V. Diode CR1810 provides additional input transient protection.

Amplifier U1802, a unity-gain buffer, receives input signals from the Input Filter through dc-blocking capacitor C1811 and drives the Hi Z Buffer Out line. Resistor R1813 provides a dc leakage path from input pin 3 back to the amplifier output, but because of the follower action of U1802, R1813 does not affect ac signal fluctuations.

Error amplifier U1803 stabilizes any input offsets of U1802 by providing a correction voltage to one balance input of U1802 through R1829. This correction voltage is derived by comparing the circuit output voltage supplied to its inverting input by R1818 to the circuit input voltage at its noninvering input provided by R1830.

Offset bias current for U1803 is supplied to pin 3 by R1816. Transistor Q1807 supplies a constant current to R1815 and R1819, and the wiper voltage of R1819 is applied to R1816. The voltage drop across R1816 will be constant with input signal level changes so a fixed input bias current will be maintained into pin 3. Potentiometer R1817 adjusts for any circuit offsets.

With pin 6 of U1803 at ground potential, there is nominally no offset voltage supplied to U1802 and no current flows through R1813. Should an offset develop, current will flow through R1813 and C1811 to either charge or discharge C1811 and alter the voltage at pin 3. The output of U1802 will then change and U1803 will act to correct the offset.

Rms Converter

The Rms Converter circuit, shown on Diagram 8, changes the ac output signal of the Input Buffer into a proportional dc voltage for application to the V/F Converter.

The Hi Z Buffer Out signal is applied to amplifier U1901 which has a fixed gain of 5. The output of U1901 is passed through R1904 and C1906 to drive the rms-ac-to-dc converter module U1902. Ac calibration is provided by the input resistance of U1902 dividing with the resistance of R1904, and the dc component is blocked by C1906. Rms converter U1902 contains an analog computing circuit which squares the input signal, averages it using C1907, and takes the square root of the value. The resulting current flows through an internal resistor whose high side is brought out at pin 9. The other end of the resistor is brought out at pin 1 where an output offset reference voltage is applied by Ac Zero potentiometer R1908, R1906, and R1907.

The converter signal at pin 9 is applied to an active filter comprised of R1905, C1908, and C1901. An internal voltage follower op amp with an input at pin 10 and the output at pin 8 acts as the voltage controlled voltage source necessary to complete the active filter. The filtered output at pin 8 is applied to multiplexer IC U1905 through R1909.

Ac Compensation

The Ac Compensation circuit provides fully compensated response over the entire specified input operating range.

Adjustable compensation for the ÷10, ÷100 and ÷1000 taps of the ac divider is provided by CMOS switch U1909 and potentiometers R1965, R1966 and R1967. The switches are controlled by the same signal lines that activate relays K2 through K4, and each switch will close when its corresponding relay is energized. One switch section is assigned to each compensation adjustment, and the wiper voltage of that adjustment will be applied to C1827 when its switch is closed. Since (at low and medium frequencies) the signal applied to C1827 is a gain-adjusted replica of the voltage present at the selected divider tap, adjusting the potentiometer has the effect of varying the effective capacitance to ground presented in shunt with C1806 by C1827. This effect is transmitted up the divider when other taps are selected so that all taps are independently adjustable. Capacitors C1802, C1804, C1805, and C1806 provide nominal divider compensation upon which the effective capacitance changes of C1827 are added.

The same mechanism is also used with C1820 to remove most of the low and medium frequency input capacitance from the load side of C1801. This minimizes the variations in loss through C1801 due to changing load capacitance during autoranging of the DMM. The output of U1901 is coupled through the network consisting of C1970 and R1973 to C1820, with R1970 limiting transient currents during autoranging. Resistor R1973 guards C1820 under dc conditions to minimize input circuit leakage. The network consisting of R1850 and C1850 neutralize the negative input R and C which result at medium and high frequencies due to the compensation circuit.

Multiplexer and Voltage Reference

Multiplexer U1905 selects one of the six signals for application to the V/F Convertor circuit. The particular signal selected is controlled through six of the eight possible codes present on pins 4, 5 and 6 of Serial Interface IC U1906. These signals are:

Ground—Applied to pins 1 and 12
Buf Out—Applied to pins 14 and 15
Ac Out—Applied to pin 4
Dc Ref—Applied to pin 13
Ch 1 V Ref—Applied to pin 2
Ohm Ref—Applied to pin5

The volts reference signals are derived from 2.5-V Reference IC U1903. Potentiometers R1919 and R1922 derive a portion of the 2.5-V reference for DMM calibration in the voltage measurements modes.

The Ground signal is a sample from the DMM high quality analog common. Other input signals will be discussed in the appropriate sections.

Series resistors R1926, R1909 and R1913 limit current from the Buf Out, Ac Out, and Ohm Ref signal lines connected to the Multiplexer IC inputs. The currents are prevented from reaching an input overload condition which could cause the resulting voltage to exceed the multiplexer supplies. This prevents possible malfunctions due to multiplexer latch-up.

V/F Converter

The V/F Converter changes the output voltage of the Multiplexer to a proportional frequency which is used in the Counter section of the CTM.

Input signals to the V/F Converter from the Multiplexer are applied to unity-gain buffer U1900D. The divider at the buffer output composed of R1927 and R1928 attenuates the signal by a factor of five, and both the unattenuated and attenuated signals are connected as inputs to CMOS switch U1907A. Diodes CR1906, CR1907, and resistor R1935 decode control signals from Serial Interface IC U1906 pins 4 and 7 such that a HI on either line selects the attenuated signal for output.

The output of U1907A drives unity-gain buffer/limiter U1900A. This amplifier limits the input signal at its inverting input to plus and minus 700 mV. The noninverting input of U1900B is biased by resistors R1933 and R1934 to a voltage of about 750 mV, and the op amp will maintain this voltage on its inverting input. Therefore the difference between the 750-mV bias voltage and the voltage to be measured (at pin 2 of U1900A) is impressed across R1931. This voltage develops the input excitation current for the V/F convertor stage. The integrator comprised of U1900B and C1917 integrates this current, and output at pin 7 swings positive. The same 750 mV bias is applied to pin 6 of U1908 and is compared against the rising integrator voltage applied to input pin 7 through R1942. When the integrator output reaches 750 mV, U1908 generates an 18 μs current pulse at pin 1 and sources it into the summing junction at the noninverting input of U1900B. This current level is set by R1943 at about 500 μA and always exceeds the input excitation current. Therefore, the integrator output reverses direction for 18 μs and integrates toward ground. The 18 μs pulse width is set by R1930 and C1914, while R1929 and C1913 ensure short term output frequency stability by filtering the 12-V supply.

Since input excitation current never goes to zero, the V/F convertor circuit always oscillates. All the output direct current from U1908 pin 1 must eventually be sunk by R1931. Current pulse width and amplitude are constant, so the repetition rate (frequency) of current pulses will be exactly proportional to the input excitation current. The output drive current of U1908 at pin 3 flows in 18 μs pulses and is connected through R1941 to the LED portion of optical-isolator U1806.

The limiting action of U1900A is accomplished by establishing standing diode bias currents such that for positive input swings, CR1905 carries less and less current until it disconnects at about +700 mV. In the negative direction, CR1984 is biased to disconnect at −700 mV. Since the feedback loop is open during limiting, U1900A's output swings to the positive or negative supply level dependent upon the direction of the input signal.

Limiting is provided for positive input swings by CR1905 being biased off. Only insignificantly small amounts of current flows into the inverting input of U1900A, and the voltage at that pin is established by the divider network composed of R1931 and R1932. The voltage to this divider is the same voltage that is present at the inverting input of U1900B. Since this voltage is maintained by circuit operation to be the same as that at its noninverting input, pin 2 of U1900A cannot go more positive than that set by divider (about 700 mV). The divider voltage therefore sets the positive limit point.

For negative input swings, the output of U1900A goes negative and allows input pin 2 to also go negative. Consequently R1931 and R1932 both source current into the anode of CR1905 which is then sunk by R1984. The output voltage of U1900A maintains regulation by sourcing the difference between what is being sunk through R1984 and what is available from R1931 and R1932. As the input voltage nears −700 mV, the latter two currents approach equality, current through CR1984 drops to zero and it disconnects. This opens the loop and limits negative output swings.

The output frequency increases from 6 KHz for an input voltage of 0 V to 11 KHz with an input voltage of −700 mV. When the input voltage is +700 mV, the frequency drops to 1 kHz. The V/F Out signal is coupled through opto-isolator U1806 and transistor Q1808 to the Input Multiplexer in the Counter circuitry.

Ohms Reference

The Ohms Reference circuitry supplies excitation to the bottom of the input divider when making resistance measurements.

IC U1904 is configured as an astable multivibrator and has a frequency of about 400 Hz and a duty factor of about 60% set by R1924, R1925, and C1916. Output pin 3 drives the select input of switches U1907B and U1907C, and diodes CR1908 and CR1909 prevent oscillation by forcing pin 3 HI if either pin 6 or pin 7 of U1906 is LO.

When U1904 is disabled (pin 3 is HI), U1907C connects C1911 to the 2.5-V reference. The noninverting input of unity-gain buffer amplifier U1950 is also biased to the 2.5-V reference by R1912, and the amplifier acts through R1960 and RT1915 to maintain the Ohms Drive line at the same voltage. This signal level is fed back to the inverting input of U1950 by R1983 and is also applied to pin 5 of U1905 by R1913. The Ohms Drive signal drives the bottom of the input divider network when the Ohms function is selected. Diodes CR1901 and CR1902 are used to clamp U1950 pin 2 during overload conditions, and C1910 stabilizes the pulse response of U1950.

When a DMM control word is received which enables U1904, U1907B and U1907C switch at a 400 Hz rate and use the "Y" input connection for 60% of each cycle. For the part of the cycle that connects the "X" inputs to the switch outputs, U1900C compares the Ohms Drive signal through R1945 with DMM common. Any difference is integrated by C1912 and applied through R1918 and C1911 to the noninverting input of U1950. Therefore the Ohms Drive line is driven and held to about zero volts by a closed loop regulator. The current required to hold U1950 pin 3 at ground potential causes C1911 to charge such that the output of U1900C swings in a negative direction.

When the switches connect the "Y" inputs to the switch outputs, U1907C connects C1911 to the 2.5 Volts reference, causing the input signal to U1950 to swing to about 4.5 V. From there it slowly swings in a negative direction. IC U1900C remains in a loop closed by R1917, and its output settles quickly to a point determined by R1916 and R1917 which is roughly the same as that output level which is first needed when the switches return to the "X" state.

The resulting Ohms Drive signal has a flat bottom at zero volts, a tilted top at approximately 4.5 V, and is at this HI level for 60% of the cycle. The average value of this rectangular waveform present at the Ω Ref input to U1905 is exactly equal to the dc level (about 2.5 V) present there when U1904 is disabled.

Overload Protection

The overload protection circuit protects the ohmmeter circuitry from damage when high voltages are applied to the DMM inputs.

Under overload conditions, high input voltages may be applied through a relay contact, through the corresponding portion of the input divider network, and on to the Ohms Drive line. This voltage is in turn applied to R1960 and RT1915, resulting in high current which could damage the relay contact if it opened. If the currents are large enough to exceed the output source or sink capabilities of U1950, the op amp will current limit and the excess current will be absorbed by VR1903, VR1904, and either Q1910 or Q1911, depending on signal polarity. The transistor which is biased on will pull its collector toward ground and disable U1906 from changing output states by removing the HI at enable pin 1 through CR1975. Transistor Q1970 will be biased on by R1976 and R1977 and the Ohms Protect line will go HI. This will bias on Q1810 and the relay coil common line will be held LO to keep the relay contact closed.

Thermistor RT1915 heats due to the power it is dissipating until it reaches 80°C. Its resistance then rises dramatically to reduce both the overload current level and its internal power dissipation. When the overload current level drops to an amount that U1950 can source or sink, current will no longer flow through VR1903 and VR1904. Both Q1910 and Q1911 will be biased off, allowing R1976, R1977, and R1978 to charge C1976. The increasing voltage will reverse bias CR1975 to enable U1906 to function again and will bias off Q1970. Capacitor C1975 can then charge, and Q1810 will be biased on if one of the relays is also on. Resistors R1978 and R1981 limit transient current when the overload circuit is first activated.

Serial Interface

The serial interface circuit uses serial-in, parallel-out shift register U1906 to receive microprocessor control words from opto-isolators U1804 and U1805.

When a new 8 bit serial message is transmitted, the Clock line goes LO. Diode CR1910 discharges C1918 to pull input enable pin 1 LO and prevents the output latches from changing states. Data is applied to pin 2 and is clocked into the shift register by positive transitions of the clock input (pin 3). These clock pulses are HI for no more than 1 ms so that C1918 cannot charge and place a HI on enable pin 1. When the message has been transmitted, the clock goes HI and reverse biases CR1910. Capacitor C1918 then charges through R1936 to a HI and, after approximately 5 ms, the new data is latched into the outputs. Thus the register outputs are fully buffered.

The filter composed of R1982 and C1982 reject spurious clock signals which can result from large common mode transients across the opto-isolators.

Relay Drive

Four control word bits drive range-relays K1801 through K1804 through Darlington emitter-followers Q1901 through Q1904. A relay is energized by a HI being placed on the base of its driver by U1906. Resistors R1951, R1952, R1953, and R1954 supply base drive to Q1810, and the transistor will be biased on if any of the four relays is energized. The relay coil common (pin 2 of each relay) will then be pulled low to about a diode drop above ground. If no relays are enabled (as in the high ohms ranges), then all relay coil drives disconnect and the coils are guarded through R1823 to the output of the Hi-Z Buffer.

DMM Power Supply

The DMM power supply provides supply voltages while maintaining circuit isolation from chassis ground.

Transformer T1801 has +30 V and −30 V from the main power supply applied to its primary. The secondary is full-wave rectified by the bridge composed of CR1801, CR1802, CR1803, and CR1804, and capacitors C1903 and C1904 provide filtering for the +12-V and −12-V supplies respectively. The +7.5-V supply is derived from the +12-V supply by voltage-dropping resistor R1910 and Zener-diode VR1901. Likewise the −7.5-V supply is derived from the −12.5-V supply using R1911 and VR1902.

PERFORMANCE CHECK PROCEDURE

INTRODUCTION

PURPOSE

The "Performance Check Procedure" is used to verify the Performance Requirement statements listed in Table 1-1. It is the recommended acceptance check procedure for new instruments.

Instrument performance should be checked after every 2000 hours of operation or once each year if used infrequently. A more frequent interval may be necessary if your instrument is subjected to harsh environments or severe usage. The results of these periodic checks will determine the need for readjustment.

Selected procedures may also be used as preliminary troubleshooting aids or to verify instrument performance after repair or component replacement.

STRUCTURE

This procedure is structured into four major subsections, each of which can be performed independently, to permit checking individual portions of the instrument. At the beginning of each subsection there is an equipment-required list showing only the test equipment necessary for performing the steps in that subsection. In this list, the Item number that follows each piece of equipment corresponds to the Item number listed in Table 4-1.

Also at the beginning of each subsection is a list of all the front-panel control settings required to prepare the instrument for performing Step 1 in that subsection. Each succeeding step within a particular subsection should then be performed, both in the sequence presented and in its entirety, to ensure that control-setting changes will be correct for ensuing steps.

TEST EQUIPMENT

The test equipment listed in Table 4-1 is a complete list of the equipment required to accomplish both the "Performance Check Procedure" in this section and the "Adjustment Procedure" in Section 5. To assure accurate measurements, it is important that test equipment used for making these checks meet or exceed the specifications described in Table 4-1. When considering use of equipment other than that recommended, utilize the "Minimum Specification" column to determine whether available test equipment will suffice.

Each procedure in this section is written using the control and connector nomenclature imprinted on the "recommended" test equipment. When substitute equipment is used, control settings stated in the test setup and in the procedure itself may need to be altered.

Detailed operating instructions for test equipment are not given in this procedure. If more operating information is required, refer to the appropriate test-equipment instruction manual.

LIMITS AND TOLERANCES

The tolerances given in this procedure are valid for an instrument that is operating in and has been previously calibrated in an ambient temperature between +18°C and +28°C. The instrument also must have had at least a 30-minute warm-up period. Refer to Table 1-1 for tolerances applicable to an instrument that is operating outside this temperature range. All tolerances specified are for the instrument only and do not include test-equipment error.

PREPARATION FOR CHECKS

It is not necessary to remove the instrument cover to accomplish any subsection in the "Performance Check Procedure", since all checks are made using operator-accessible front- and rear-panel controls and connectors.

Test equipment items 1 through 20 in Table 4-1 are required to accomplish the complete Performance Check Procedure.

Before performing any procedure in this section, set the POWER switch to ON and allow a 30-minute warm-up period.

The most accurate display adjustments are made with a stable, well-focused, low-intensity display. Unless otherwise noted, adjust the INTENSITY, FOCUS, and TRIGGER LEVEL controls as needed to view the display.

Table 4-1
Test Equipment Required

Item No. and Description	Minimum Specification	Purpose	Examples of Suitable Test Equipment
1. Calibration Generator	Standard-amplitude signal levels: 10 mV to 50 V. Accuracy: ±0.3% High-amplitude signal levels: 1 V to 60 V. Repetition rate: 1 kHz. Fast-rise signal level: 1 V. Repetition rate: 1 MHz. Rise time: 1 ns or less. Flatness: ±0.5%.	Vertical and horizontal checks and adjustments.	TEKTRONIX PG506 Calibration Generator[a].
2. Leveled Sine-Wave Generator	Frequency: 250 kHz to above 100 MHz. Output amplitude: variable from 10 mV to 5 V p-p. Output impedance: 50 Ω. Reference frequency: 50 kHz. Amplitude accuracy: constant within 3% of reference frequency as output frequency changes.	Vertical, horizontal, and triggering checks and adjustments. Display adjustment and Z-Axis check.	TEKTRONIX SG503 Leveled Sine-Wave Generator[a].
3. Time-Mark Generator	Marker outputs: 10 ns to 0.5 s. Marker accuracy: ±0.1%. Trigger output: 1 ms to 0.1 μs, time-coincident with markers.	Horizontal checks and adjustments. Display adjustment.	TEKTRONIX TG501 Time-Mark Generator.[a]
4. Pulse Generator	Frequency: 10 MHz. Pulse width: 50 ns. Pulse width accuracy: 5%.	Pulse width check.	TEKTRONIX PG502 Pulse Generator.[a]
5. Dc and Ohms Calibrator	Dc voltage: 400 mV to 400 V. Voltage accuracy: 0.05%. Resistance: 100 Ω to 10 MΩ. Resistance accuracy: 0.05%.	DMM dc and ohms checks and adjustments.	Fluke 5101B with Option 03.
6. Ac Calibration System	Ac voltage: 400 mV to 300 V. Voltage accuracy: 0.2%. Frequency: 20 Hz to 20 kHz.	DMM ac checks and adjustments and mode checks.	Fluke 5101B and 5205A.
7. WWV Receiver	Frequency: 1 MHz. Accuracy: 5×10^{-9}.	Counter checks.	Spectracom Corp. Type 8161.
8. Cable (2 required)	Impedance: 50 Ω. Length: 42 in. Connectors: BNC.	Signal interconnection.	Tektronix Part Number 012-0057-01.

[a]Requires a TM 500-Series power-module mainframe.

Table 4-1 (cont)

Item No. and Description	Minimum Specification	Purpose	Examples of Suitable Test Equipment
9. Termination (2 required)	Impedance: 50 Ω. Connectors: BNC.	Signal termination.	Tektronix Part Number 011-0049-01.
10. Dual-Input Coupler	Connectors: BNC-Female-to-Dual-BNC male.	Vertical checks and adjustments.	Tektronix Part Number 067-0525-02.
11. 10X Attenuator	Ratio: 10X. Impedance: 50 Ω. Connectors: BNC.	Vertical compensation and triggering checks.	Tektronix Part Number 011-0059-02.
12. T-Connector	Connectors: BNC.	Signal interconnection.	Tektronix Part Number 103-0030-00.
13. Adapter	Connectors: BNC-Male-to-Miniature Probe Tip.	Signal interconnection.	Tektronix Part Number 013-0084-02.
14. Patch Cord	Banana-Plug-to-Banana Plug.	Common-mode checks.	Tektronix Part Number 012-0039-00.
15. Adapter	Connectors: BNC-Female-to-BNC Female.	Common-mode checks.	Tektronix Part Number 103-0028-00.
16. Adapter	Connectors: BNC-Male-to-Dual Binding Post.	Common-mode checks.	Tektronix Part Number 103-0035-00.
17. Resistor	1 kΩ, 1/4 W.	Common-mode checks.	
18. Resistor	150 MΩ, 1/4 W. Accuracy: 1%.	Ohms check.	Tektronix Part Number 325-0383-00.
19. Resistor	1.5 GΩ, 1/4 W. Accuracy: 1%.	Ohms check.	Tektronix Part Number 325-0382-00.
20. Adapter (2 Required)	BNC-Female-to-Dual Banana.	DMM checks.	Tektronix Part Number 103-0090-00.
21. Normalizer		Vertical adjustment.	Tektronix Part Number 067-1129-00.
22. Digital Voltmeter	Range: 0 to 140 V. Dc voltage accuracy: ±0.15%. 4 1/2-digit display.	Power supply checks and adjustment. Vertical adjustment.	TEKTRONIX DM 501A Digital Multimeter.[a]
23. Test Oscilloscope with included 10X Probe	Bandwidth: Dc to 10 MHz. Minimum deflection factor: 5 mV/div. Accuracy: ±3%.	Holdoff check and general troubleshooting.	TEKTRONIX 2213 Oscilloscope.
24. Dc Voltmeter	Range: 0 to 2500 V, calibrated to 1% accuracy at −2000 V.	High-voltage power supply check.	Valhalla Model 4500.
25. Screwdriver	Length: 3-in shaft. Bit size: 3/32 in.	Adjust variable resistors.	Xcelite R-3323.
26. Low-Capacitance Alignment Tool	Length: 1-in shaft. Bit size: 3/32 in.	Adjust variable capacitors.	J.F.D. Electronics Corp. Adjustment Tool Number 5284.

[a]Requires a TM 500-Series power-module mainframe.

INDEX TO PERFORMANCE CHECK STEPS

Vertical

1. Check Deflection Accuracy and Variable Range 4-5
2. Check Position Range 4-5
3. Check Trigger View Gain 4-6
4. Check Aberrations 4-6
5. Check Bandwidth 4-7
6. Check Bandwidth Limit Operation 4-7
7. Check Common-Mode Rejection Ratio 4-7
8. Check Channel Isolation 4-8
9. Check External Z-Axis Operation 4-8
10. Check Probe Adjust Operation 4-8

Horizontal

1. Check Timing Accuracy and Linearity 4-9
2. Check Variable Range and Sweep Separation . 4-10
3. Check Delay Jitter 4-10
4. Check Position Range 4-10
5. Check X Gain 4-11
6. Check X Bandwidth 4-11
7. Check Sweep Length 4-11

Trigger

1. Check Internal Triggering 4-12
2. Check External Triggering 4-13
3. Check External Trigger Ranges 4-14
4. Check Single Sweep Operation 4-14

CTM

1. Check Time Base Error 4-15
2. Check Period 4-15
3. Check Width 4-16
4. Check Delay Time Range and Accuracy 4-16
5. Check Delta Time 4-16
6. Check Dc Volts Zero 4-17
7. Check Dc Volts Accuracy 4-17
8. Check Ac Volts Zero 4-17
9. Check Ac Volts Accuracy 4-17
10. Check Channel 1 Dc Volts 4-17
11. Check Channel 1 Ac Volts 4-18
12. Check Ohms 4-19
13. Check Diode Forward Drop 4-19
14. Check Temperature 4-20
15. Check Normal Mode Rejection 4-20
16. Check Common Mode Rejection 4-20

VERTICAL

Equipment Required (see Table 4-1):

Calibration Generator (Item 1)	Dual-Input Coupler (Item 10)
Leveled Sine-Wave Generator (Item 2)	10X Attenuator (Item 11)
Two 50-Ω BNC Cables (Item 8)	BNC T-Connector (Item 12)
50-Ω BNC Termination (Item 9)	10X Probe (provided with instrument)

INITIAL CONTROL SETTINGS

Vertical (Both Channels)

POSITION	Midrange
VERTICAL MODE	CH 1
BW LIMIT	On (button in)
VOLTS/DIV	2 mV
VOLTS/DIV Variable	CAL detent
INVERT	Off (button out)
Input Coupling	DC

Horizontal

POSITION	Midrange
HORIZONTAL MODE	A
A SEC/DIV	0.2 ms
SEC/DIV Variable	CAL detent
X10 Magnifier	Off (knob in)

A TRIGGER

VAR HOLDOFF	NORM
Mode	P-P AUTO
SLOPE	OUT
LEVEL	Midrange
A&B INT	VERT MODE
A SOURCE	INT
A EXT COUPLING	AC

PROCEDURE STEPS

1. Check Deflection Accuracy and Variable Range

a. Connect the standard-amplitude generator output via a 50-Ω cable to the CH 1 OR X input connector.

b. CHECK—Deflection accuracy is within the limits given in Table 4-2 for each CH 1 VOLTS/DIV switch setting and corresponding standard-amplitude signal. When at the 20-mV VOLTS/DIV switch setting, rotate the CH 1 VOLTS/DIV Variable control fully counterclockwise and CHECK that the display decreases to 2 divisions or less. Then return the CH 1 VOLTS/DIV Variable control to the CAL detent and continue with the 50-mV check.

c. Move the cable from the CH 1 OR X input connector to the CH 2 OR Y input connector. Set the VERTICAL MODE switch to CH 2.

Table 4-2
Deflection Accuracy Limits

VOLTS/DIV Switch Setting	Standard Amplitude Signal	Vertical Deflection (Divisions)	Accuracy Limits (Divisions)
2 mV	10 mV	5	4.90 to 5.10
5 mV	20 mV	4	3.92 to 4.08
10 mV	50 mV	5	4.90 to 5.10
20 mV	0.1 V	5	4.90 to 5.10
50 mV	0.2 V	4	3.92 to 4.08
0.1 V	0.5 V	5	4.90 to 5.10
0.2 V	1 V	5	4.90 to 5.10
0.5 V	2 V	4	3.92 to 4.08
1 V	5 V	5	4.90 to 5.10
2 V	10 V	5	4.90 to 5.10
5 V	20 V	4	3.92 to 4.08

d. Repeat part b using the Channel 2 controls.

2. Check Position Range

a. Set:

VOLTS/DIV (both)	50 mV
Input Coupling (both)	AC

b. Set the generator to produce a 0.5-V standard-amplitude signal.

c. Adjust the CH 2 VOLTS/DIV Variable control to produce a 4.4-division display. Set the CH 2 VOLTS/DIV switch to 10 mV.

d. CHECK—Rotating the Channel 2 POSITION control fully counterclockwise positions the top of the trace below the center horizontal graticule line.

e. CHECK—Rotating the Channel 2 POSITION control fully clockwise positions the bottom of the trace above the center horizontal graticule line.

f. Move the cable from the CH 2 OR Y input connector to the CH 1 OR X input connector. Set the VERTICAL MODE switch to CH 1.

g. Repeat parts c through e using the Channel 1 controls.

3. Check Trigger View Gain

a. Set:

Vertical POSITION (both)	Midrange
VOLTS/DIV (both)	0.1 V
VOLTS/DIV Variable (both)	CAL detent

b. While holding in the TRIG VIEW button, use the A TRIGGER LEVEL control to vertically center the display.

c. CHECK—Display amplitude is 4 to 6 divisions while holding in the TRIG VIEW button.

d. Move the cable from the CH 1 OR X input connector to the CH 2 OR Y input connector. Set the VERTICAL MODE switch to CH 2.

e. Repeat parts b and c.

f. Move the cable from the CH 2 OR Y input connector to the EXT INPUT connector. Set the A SOURCE switch to EXT.

g. Repeat parts b and c.

h. Set the A EXT COUPLING switch to DC.

i. Repeat parts b and c.

j. Set the A EXT COUPLING switch to DC ÷ 10.

k. Set the generator to produce a 5-V signal.

l. Repeat parts b and c.

m. Disconnect the test equipment from the instrument.

4. Check Aberrations

a. Set:

VERTICAL MODE	CH 1
BW LIMIT	Off (button out)
VOLTS/DIV (both)	2 mV
Input Coupling (both)	DC
A SEC/DIV	0.05 μs
A SOURCE	INT

b. Connect the fast-rise, positive-going square-wave output via a 50-Ω cable, a 10X attenuator, and a 50-Ω termination to the CH 1 OR X input connector.

c. Set the generator to produce a 1-MHz, 5-division display.

d. CHECK—Display aberrations are within 5% (0.25 division or less).

e. Set the CH 1 VOLTS/DIV switch to 5 mV.

f. Set the generator to produce a 5-division display.

g. CHECK—Display aberrations are within 4% (0.2 division or less).

h. Repeat part g for each of the following VOLTS/DIV switch settings: 10 mV through 0.5 V. Adjust the generator output and attach or remove the 10X attenuator as necessary to maintain a 5-division display at each VOLTS/DIV switch setting.

i. Disconnect the cable from the CH 1 OR X input connector. Reconnect the 10X attenuator (if previously removed) and reduce the generator amplitude to minimum.

j. Connect the cable to the CH 2 OR Y input connector and set the VERTICAL MODE switch to CH 2.

k. Repeat parts c through h using the Channel 2 controls.

l. Disconnect the test equipment from the instrument.

5. Check Bandwidth

a. Set:

VOLTS/DIV (both)	2 mV
A SEC/DIV	20 μs

b. Connect the leveled sine-wave generator output via a 50-Ω cable and a 50-Ω termination to the CH 2 OR Y input connector.

c. Set the generator to produce a 50-kHz, 6-division display.

d. CHECK—Display amplitude is 4.2 divisions or greater as the generator output frequency is increased up to the value shown in Table 4-3 for the corresponding VOLTS/DIV switch setting.

Table 4-3
Settings for Bandwidth Checks

VOLTS/DIV Switch Setting	Generator Output Frequency
2 mV	90 MHz
5 mV to 5 V	100 MHz

e. Repeat parts c and d for all indicated CH 2 VOLTS/DIV switch settings, up to the output-voltage upper limit of the sine-wave generator being used.

f. Move the cable from the CH 2 OR Y input connector to the CH 1 OR X input connector. Set the VERTICAL MODE switch to CH 1.

g. Repeat parts c and d for all indicated CH 1 VOLTS/DIV switch settings, up to the output-voltage upper limit of the sine-wave generator being used.

6. Check Bandwidth Limit Operation

a. Set:

BW LIMIT	On (button in)
CH 1 VOLTS/DIV	10 mV
A SEC/DIV	20 μs

b. Set the generator to produce a 50-kHz, 6-division display.

c. Increase the generator output frequency until the display amplitude decreases to 4.2 divisions.

d. CHECK—Generator output frequency is between 18 and 22 MHz.

e. Disconnect the test equipment from the instrument.

7. Check Common-Mode Rejection Ratio

a. Set:

BW LIMIT	Off (button out)
CH 2 VOLTS/DIV	10 mV
INVERT	On (button in)

b. Connect the leveled sine-wave generator output via a 50-Ω cable, a 50-Ω termination, and a dual-input coupler to the CH 1 OR X and the CH 2 OR Y input connectors.

c. Set the generator to produce a 50-MHz, 6-division display.

d. Vertically center the display using the Channel 1 POSITION control. Then set the VERTICAL MODE switch to CH 2 and vertically center the display using the Channel 2 POSITION control.

e. Set the VERTICAL MODE switches to BOTH and ADD.

f. CHECK—Display amplitude is 0.6 division or less.

g. If the check in part f meets the requirement, skip to part p. If it does not, continue with part h.

h. Set the VERTICAL MODE switch to CH 1.

i. Set the generator to produce a 50-kHz, 6-division display.

j. Set the VERTICAL MODE switch to BOTH.

k. Adjust the CH 1 or CH 2 VOLTS/DIV Variable control for minimum display amplitude.

l. Set the VERTICAL MODE switch to CH 1.

m. Set the generator to produce a 50-MHz, 6-division display.

n. Set the VERTICAL MODE switch to BOTH.

o. CHECK—Display amplitude is 0.6 division or less.

p. Disconnect the test equipment from the instrument.

8. Check Channel Isolation

a. Set:

VERTICAL MODE	CH 1
VOLTS/DIV (both)	1 V
VOLTS/DIV Variable (both)	CAL detent
INVERT	Off (button out)
Channel 2 Input Coupling	GND
A SEC/DIV	0.1 μs

b. Connect the leveled sine-wave generator output via a 50-Ω cable and a 50-Ω termination to the CH 1 OR X input connector.

c. Set the generator to produce a 50-MHz, 5-division display.

d. Set the VERTICAL MODE switch to CH 2.

e. CHECK—Display amplitude is 0.05 division or less.

f. Move the cable from the CH 1 OR X input connector to the CH 2 OR Y input connector.

g. Set:

VERTICAL MODE	CH 1
Channel 1 Input Coupling	GND
Channel 2 Input Coupling	DC

h. CHECK—Display amplitude is 0.05 division or less.

i. Disconnect the test equipment from the instrument.

9. Check External Z-Axis Operation

a. Set:

CH 1 VOLTS/DIV	1 V
Channel 1 Input Coupling	DC
A SEC/DIV	20 μs

b. Connect the leveled sine-wave generator output via a 50-Ω cable and a T-connector to the CH 1 OR X input connector. Then connect a 50-Ω cable and a 50-Ω termination from the T-connector to the EXT Z AXIS INPUT connector on the rear panel.

c. Set the generator to produce a 5-V, 50-kHz signal.

d. CHECK—For noticeable intensity modulation. The positive part of the sine wave should be of lower intensity than the negative part.

e. Disconnect the test equipment from the instrument.

10. Check Probe Adjust Operation

a. Set:

CH 1 VOLTS/DIV	10 mV
A SEC/DIV	0.5 ms

b. Connect the 10X Probe to the CH 1 OR X input connector and insert the probe tip into the PROBE ADJUST jack on the instrument front panel. If necessary, adjust the probe compensation for a flat-topped square-wave display.

c. CHECK—Display amplitude is 4.75 to 5.25 divisions.

d. Disconnect the probe from the instrument.

HORIZONTAL

Equipment Required (see Table 4-1):

Calibration Generator (Item 1)
Leveled Sine-Wave Generator (Item 2)
Time-Mark Generator (Item 3)
50-Ω BNC Cable (Item 8)
50-Ω BNC Termination (Item 9)

INITIAL CONTROL SETTINGS

Vertical

Channel 1 POSITION	Midrange
VERTICAL MODE	CH 1
BW LIMIT	Off (button out)
CH 1 VOLTS/DIV	0.5 V
CH 1 VOLTS/DIV Variable	CAL detent
Channel 1 Input Coupling	DC

Horizontal

POSITION	Midrange
HORIZONTAL MODE	A
A SEC/DIV	0.05 μs
SEC/DIV Variable	CAL detent
X10 Magnifier	Off (knob in)
B DELAY TIME POSITION	Fully counterclockwise

B TRIGGER

SLOPE	OUT
LEVEL	Fully clockwise

A TRIGGER

VAR HOLDOFF	NORM
Mode	NORM
SLOPE	OUT
LEVEL	Midrange
A&B INT	VERT MODE
A SOURCE	INT
A EXT COUPLING	DC ÷ 10

PROCEDURE STEPS

1. Check Timing Accuracy and Linearity

a. Connect the time-mark generator output via a 50-Ω cable and a 50-Ω termination to the CH 1 OR X input connector.

b. Select 50-ns time markers from the time-mark generator.

c. Use the Channel 1 POSITION control to center the display vertically. Adjust the A TRIGGER LEVEL control for a stable, triggered display.

d. Use the Horizontal POSITION control to align the second time marker with the second vertical graticule line.

e. CHECK—Timing accuracy is within 2% (0.16 division at the 10th vertical graticule line) and linearity is within 5% (0.1 division over any 2 of the center 8 divisions).

NOTE

For checking the timing accuracy of the A SEC/DIV switch settings from 50 ms to 0.5 s, watch the time marker tips only at the 2nd and 10th vertical graticule lines while adjusting the Horizontal POSITION control.

f. Repeat parts c through e for the remaining A SEC/DIV and time-mark generator setting combinations shown in Table 4-4 under the "Normal" column.

g. Set:

A SEC/DIV	0.05 μs
X10 Magnifier	On (knob out)

h. Select 10-ns time markers from the time-mark generator.

i. Use the Horizontal POSITION control to align the first time marker that is 25 ns beyond the start of the sweep with the second vertical graticule line.

Table 4-4
Settings for Timing Accuracy Checks

SEC/DIV Switch Setting	Time-Mark Generator Setting	
	Normal	X10 Magnified
0.05 μs	50 ns	10 ns
0.1 μs	0.1 μs	10 ns
0.2 μs	0.2 μs	20 ns
0.5 μs	0.5 μs	50 ns
1 μs	1 μs	0.1 μs
2 μs	2 μs	0.2 μs
5 μs	5 μs	0.5 μs
10 μs	10 μs	1 μs
20 μs	20 μs	2 μs
50 μs	50 μs	5 μs
0.1 ms	0.1 ms	10 μs
0.2 ms	0.2 ms	20 μs
0.5 ms	0.5 ms	50 μs
1 ms	1 ms	0.1 ms
2 ms	2 ms	0.2 ms
5 ms	5 ms	0.5 ms
10 ms	10 ms	1 ms
20 ms	20 ms	2 ms
50 ms	50 ms	5 ms
A Sweep Only		
0.1 s	0.1 s	10 ms
0.2 s	0.2 s	20 ms
0.5 s	0.5 s	50 ms

j. CHECK—Timing accuracy is within 3% (0.24 division at the 10th vertical graticule line) and linearity is within 5% (0.1 division over any 2 of the center 8 divisions). Exclude any portion of the sweep past the 100th magnified division.

k. Repeat parts i and j for the remaining A SEC/DIV and time-mark generator setting combinations shown in Table 4-4 under the "X10 Magnified" column.

l. Set:

HORIZONTAL MODE	B
A SEC/DIV	0.1 μs
B SEC/DIV	0.05 μs
X10 Magnifier	Off (knob in)

m. Repeat parts b through k for the B Sweep. Keep the A SEC/DIV switch one setting slower than the B SEC/DIV switch.

2. Check Variable Range and Sweep Separation

a. Set:

HORIZONTAL MODE	A
A and B SEC/DIV	0.2 ms
SEC/DIV Variable	Fully counterclockwise
X10 Magnifier	Off (knob in)
A TRIGGER Mode	P-P AUTO

b. Select 0.5-ms time markers from the time-mark generator.

c. CHECK—Time markers are 1 division or less apart.

d. Set:

Channel 1 Input Coupling	GND
SEC/DIV Variable	CAL detent
HORIZONTAL MODE	ALT

e. Use the Channel 1 POSITION control to set the A Sweep at the center horizontal graticule line.

f. CHECK—The B Sweep can be positioned more than 3.5 divisions above and below the A Sweep when the A/B SWP SEP control is rotated fully clockwise and counterclockwise respectively.

3. Check Delay Jitter

a. Set:

Channel 1 Input Coupling	DC
HORIZONTAL MODE	B
A SEC/DIV	0.5 ms
B SEC/DIV	0.5 μs

b. Select 50-μs time markers from the time-mark generator.

c. Rotate the B DELAY TIME POSITION control clockwise to position time markers consecutively within the graticule area and CHECK that the jitter on the leading edge does not exceed 1 division. Disregard slow drift.

4. Check Position Range

a. Set:

HORIZONTAL MODE	A
A SEC/DIV	10 μs

b. Select 10-μs time markers from the time-mark generator.

c. CHECK—Start of the sweep can be positioned to the right of the center vertical graticule line by rotating the Horizontal POSITION control fully clockwise.

d. CHECK—The 11th time marker can be positioned to the left of the center vertical graticule line by rotating the Horizontal POSITION control fully counterclockwise.

e. Select 50-μs time markers from the time-mark generator.

f. Align the 3rd time marker with the center vertical graticule line using the Horizontal POSITION control.

g. Set the X10 Magnifier knob to On (knob out).

h. CHECK—Magnified time marker can be positioned to the left of the center vertical graticule line by rotating the Horizontal POSITION control fully counterclockwise.

i. CHECK—Start of the sweep can be positioned to the right of the center vertical graticule line by rotating the Horizontal POSITION control fully clockwise.

j. Disconnect the test equipment from the instrument.

5. Check X Gain

a. Set:

CH 1 VOLTS/DIV	10 mV
Horizontal POSITION	Midrange
A SEC/DIV	X-Y
X10 Magnifier	Off (knob in)

b. Connect the standard-amplitude generator output via a 50-Ω cable to the CH 1 OR X input connector.

c. Set the generator to produce a 50-mV signal. Vertically center the trace using the Channel 2 POSITION control.

d. CHECK—Display is 4.85 to 5.15 horizontal divisions.

e. Disconnect the test equipment from the instrument.

6. Check X Bandwidth

a. Connect the leveled sine-wave generator output via a 50-Ω cable and a 50-Ω termination to the CH 1 OR X input connector.

b. Set the generator to produce a 5-division horizontal display at an output frequency of 50 kHz.

c. Increase the generator output frequency to 3 MHz.

d. CHECK—Display is at least 3.5 horizontal divisions.

e. Disconnect the test equipment from the instrument.

7. Check Sweep Length

a. Set the A SEC/DIV control to 0.1 ms and position the start of the sweep at the first vertical graticule line using the Horizontal POSITION control.

b. CHECK—End of the sweep is to the right of the 11th vertical graticule line.

TRIGGER

Equipment Required (see Table 4-1):

Leveled Sine-Wave Generator (Item 2)
50-Ω BNC Cable (Item 8)
50-Ω BNC Termination (Item 9)

INITIAL CONTROL SETTINGS

Vertical (Both Channels)

POSITION	Midrange
VERTICAL MODE	CH 1
BW LIMIT	Off (button out)
VOLTS/DIV	50 mV
VOLTS/DIV Variable	CAL detent
INVERT	Off (button out)
Input Coupling	DC

Horizontal

POSITION	Midrange
HORIZONTAL MODE	A
A and B SEC/DIV	0.1 μs
SEC/DIV Variable	CAL detent
X10 Magnifier	Off (knob in)
B DELAY TIME POSITION	Fully counterclockwise

B TRIGGER

SLOPE	OUT
LEVEL	Midrange

A TRIGGER

VAR HOLDOFF	NORM
Mode	NORM
SLOPE	OUT
LEVEL	Midrange
A&B INT	CH 1
A SOURCE	INT
A EXT COUPLING	DC

1. Check Internal Triggering

a. Select the FREQ function.

b. Connect the leveled sine-wave generator output via a 50-Ω cable and a 50-Ω termination to the CH 1 OR X input connector.

c. Set the generator to produce a 10-MHz, 3.5-division display.

d. Set the CH 1 VOLTS/DIV switch to 0.5 V.

e. CHECK—Stable display can be obtained by adjusting the A TRIGGER LEVEL control for each switch combination given in Table 4-5.

Table 4-5
Switch Combinations for A Triggering Checks

A TRIGGER Mode	A TRIGGER SLOPE
NORM	OUT
NORM	IN
P-P AUTO	IN
P-P AUTO	OUT

f. Set the HORIZONTAL MODE switch to B.

g. CHECK—Stable display can be obtained by adjusting the B TRIGGER LEVEL control in a position other than the B RUNS AFTER DLY position for both the OUT and IN positions of the B TRIGGER SLOPE switch.

h. Increase the generator output voltage to produce a 0.5-division display.

i. CHECK—The readout is stable and accurately displays the input signal frequency.

j. Set the HORIZONTAL MODE switch to A.

k. CHECK—The readout is stable and accurately displays the input signal frequency.

l. Set:

VERTICAL MODE	CH 2
A&B INT	CH 2

m. Move the cable from the CH 1 OR X input connector to the CH 2 OR Y input connector.

n. Repeat parts c through k for Channel 2.

o. Set the X10 Magnifier to On (knob out).

p. Set the generator to produce a 60-MHz, 1.2-division display.

q. Repeat parts e through g.

r. Increase the generator output to produce a 1.5-division display.

s. Repeat parts i through k.

t. Set:

VERTICAL MODE	CH 1
A&B INT	VERT MODE

u. Move the cable from the CH 2 OR Y input connector to the CH 1 OR X input connector.

v. Repeat parts p through s for Channel 1.

w. Set the A SEC/DIV switch to 0.05 μs.

x. Set the generator to produce a 100-MHz, 1.5-division display.

y. Repeat parts e through g.

z. Increase the generator output to produce a 2.0-division display.

aa. Repeat parts i through k.

ab. Move the cable from the CH 1 OR X input connector to the CH 2 OR Y input connector. Set the VERTICAL MODE switch to CH 2.

ac. Repeat parts x through aa for Channel 2.

ad. Disconnect the test equipment from the instrument.

2. Check External Triggering

a. Set:

VERTICAL MODE	CH 1
X10 Magnifier	Off (knob in)
A SOURCE	EXT

b. Connect a 40-mV, 10-MHz leveled sine-wave signal via a 50-Ω cable and a 50-Ω termination to the EXT INPUT connector.

c. Push in and hold the TRIG VIEW button.

d. CHECK—Stable display can be obtained by adjusting the A TRIGGER LEVEL control for each switch combination given in Table 4-5. Then release the TRIG VIEW button.

e. Increase the generator output voltage to 50 mV.

f. CHECK—The readout is stable and accurately displays the input signal frequency.

g. Set the generator output voltage to 150 mV and the frequency to 60 MHz. Set the X10 Magnifier to On (knob out).

h. Repeat parts c and d.

i. Increase the generator output voltage to 160 mV.

j. CHECK—The readout is stable and accurately displays the input signal frequency.

k. Set the generator output voltage to 250 mV and the frequency to 100 MHz.

l. Repeat parts c and d.

m. Increase the generator output voltage to 300 mV.

n. CHECK—The readout is stable and accurately displays the input signal frequency.

o. Disconnect the test equipment from the instrument.

3. Check External Trigger Ranges

a. Set:

A SEC/DIV	20 μs
X10 Magnifier	Off (knob in)
A TRIGGER SLOPE	OUT
A TRIGGER Mode	NORM

b. Connect the leveled sine-wave generator output via a 50-Ω cable, a 50-Ω termination, and a dual-input coupler to both the CH 1 OR X and EXT INPUT connectors.

c. Set the generator to produce a 50-kHz, 6.4-division display.

d. CHECK—Display is triggered along the entire positive slope of the waveform as the A TRIGGER LEVEL control is rotated.

e. CHECK—Display is not triggered (no trace) at either extreme of rotation.

f. Set the A TRIGGER SLOPE button to IN.

g. CHECK—Display is triggered along the entire negative slope of the waveform as the A TRIGGER LEVEL control is rotated.

h. CHECK—Display is not triggered (no trace) at either extreme of rotation.

4. Check Single Sweep Operation

a. Set the A SOURCE switch to INT.

b. Adjust the A TRIGGER LEVEL control to obtain a stable display.

c. Set the Channel 1 Input Coupling switch to GND.

d. Press in the SGL SWP button. The READY LED should illuminate and remain on.

e. Set the Channel 1 Input Coupling switch to DC.

f. CHECK—READY LED goes out and a single sweep occurs.

NOTE

The A INTENSITY control may require adjustment to observe the single-sweep trace.

g. Press in the SGL SWP button several times.

h. CHECK—Single-sweep trace occurs, and the READY LED illuminates briefly every time the SGL SWP button is pressed in and released.

i. Disconnect the test equipment from the instrument.

CTM

Equipment Required (see Table 4-1):

Pulse Generator (Item 4)	Adapter (Item 15)
Dc and Ohms Calibrator (Item 5)	Adapter (Item 16)
Ac Calibration System (Item 6)	Resistor (Item 17)
WWV Receiver (Item 7)	Resistor (Item 18)
50-Ω BNC Cable (Item 8)	Resistor (Item 19)
50-Ω Termination (Item 9)	Two Adapters (Item 20)
Adapter (Item 13)	10X Probe (Included with instrument)
Patch Cord (Item 14)	DMM Test Leads (Included with instrument)

INITIAL CONTROL SETTINGS

Vertical

Channel 1 POSITION	Midrange
VERTICAL MODE	CH 1
CH 1 VOLTS/DIV	0.5 V
CH 1 VOLTS/DIV Variable	CAL detent
Channel 1 Input Coupling	DCV

Horizontal

POSITION	Midrange
HORIZONTAL MODE	A
A SEC/DIV	0.5 μs
B SEC/DIV	0.05 μs
SEC/DIV Variable	CAL detent
X10 Magnifier	Off (knob in)

B TRIGGER

SLOPE	OUT
LEVEL	Midrange

A TRIGGER

VAR HOLDOFF	NORM
Mode	P-P AUTO
SLOPE	OUT
LEVEL	Midrange
A&B INT	CH 1
A SOURCE	INT

PROCEDURE STEPS

1. Check Time Base Error

a. Select the PER function.

b. Connect the WWV 1-MHz source via a 50-Ω cable to the CH 1 OR X & DMM input connector.

c. Select the FREQ function.

d. If the instrument has the TCXO option, skip to part g.

e. CHECK—Reading is between 999.9900 kHz and 1.000010 MHz.

f. Skip to Step 2 of this procedure.

g. CHECK—Reading is between 999.9995 kHz and 1.000000 MHz.

2. Check Period

a. Set the HORIZONTAL MODE switch to ALT and select the PER function.

b. Set the B TRIGGER LEVEL control to the center of its stable-trigger range.

c. CHECK—Reading is between .99800 μs and 1.00200 μs.

d. Disconnect the test equipment from the instrument.

3. Check Width

a. Set:

HORIZONTAL MODE	A
A TRIGGER Mode	NORM

b. Select the WIDTH mode.

c. Connect the pulse generator via a 50-Ω cable and a 50-Ω termination to the CH 1 OR X & DMM input connector.

d. Set the generator to produce a frequency of 10 MHz with a 50-ns wide pulse. Set the generator output to produce a 4-division display.

e. Set the A TRIGGER LEVEL control to the center of its stable-trigger range.

f. CHECK—Reading is between 37.50 ns and 62.50 ns.

g. Disconnect the test equipment from the instrument.

4. Check Delay Time Range and Accuracy

a. Select the DLY TIME function.

b. Set:

Channel 1 Input Coupling	GND
HORIZONTAL MODE	ALT
A and B SEC/DIV	0.2 ms
B DELAY TIME POSITION	Fully counterclockwise
A TRIGGER Mode	P-P AUTO
A TRIGGER LEVEL	Midrange
B TRIGGER LEVEL	B RUNS AFTER DLY

c. Align the start of the A Sweep with the 1st vertical graticule line using the Horizontal POSITION control.

d. CHECK—Intensified portion of the trace starts within 0.5 division of the start of the sweep.

e. Rotate the B DELAY TIME POSITION control fully clockwise.

f. CHECK—Intensified portion of the trace is past the 11th vertical graticule line.

g. Set the A and B SEC/DIV switches to 0.5 μs.

h. Align the start of the A Sweep with the 1st vertical graticule line using the Horizontal POSITION control.

i. CHECK—Intensified portion of the trace is past the 11th vertical graticule line.

j. Rotate the B DELAY TIME POSITION control fully counterclockwise.

k. CHECK—Intensified portion of the trace starts within 1.1 divisions of the start of the sweep.

l. Connect the WWV 1-MHz source via a 50-Ω cable to the CH 1 OR X & DMM input connector.

m. Set:

Channel 1 Input Coupling	DCV
B SEC/DIV	0.05 μs
A TRIGGER Mode	NORM

n. Set the A TRIGGER LEVEL control to the center of its stable-trigger range.

o. Set the B TRIGGER LEVEL control so that the B Sweep is triggered on the leading edge of the second displayed cycle and is at the center of its stable-trigger range.

p. CHECK—Reading is between .98000 μs and 1.02000 μs.

5. Check Delta Time

a. Select the ΔTIME function.

b. Set the B DELAY TIME POSITION control so that the leading edge of the second displayed cycle is intensified and is located on the B Sweep near the center of the screen.

c. Set the ΔTIME POSITION control so that the leading edge of the third cycle on the B Sweep coincides with the trace in part c near the center of the screen.

d. Set the B TRIGGER LEVEL control to the center of its stable trigger range.

e. CHECK—Reading is between .99949 μs and 1.00051 μs.

f. Disconnect the test equipment from the instrument.

6. Check Dc Volts Zero

a. Select the DCV function.

b. Connect one DMM test lead to the − MULTIMETER INPUTS connector and short the tip to the + input.

c. CHECK—Reading is between −.0001 V and .0001 V.

d. Disconnect the DMM test lead from the instrument.

7. Check Dc Volts Accuracy

a. Connect the dc volts calibrator via a female-to-dual banana adapter, a 50-Ω cable, and a female-to-dual banana adapter to the MULTIMETER INPUTS connector.

b. CHECK—Reading is within the limits shown in Table 4-6 for each calibrator output voltage.

Table 4-6
Dc Voltage Readout Checks

Calibrator Dc Voltage (V)	Display Readout Limits (V)
0.4	.3995 to .4005
−0.4	−.3995 to −.4005
4	3.995 to 4.005
−4	−3.995 to −4.005
40	39.95 to 40.05
−40	−39.95 to −40.05
400	399.5 to 400.5
−400	−399.5 to −400.5

c. Disconnect the test equipment from the instrument.

8. Check Ac Volts Zero

a. Select the AC RMSV function.

b. Connect one DMM test lead to the − MULTIMETER INPUTS connector and short the tip to the + input.

c. CHECK—Reading is less than .0006 V.

d. Disconnect the test equipment from the instrument.

9. Check Ac Volts Accuracy

a. Connect the ac volts calibrator via a female-to-dual banana adapter, a 50-Ω cable, and a female-to-dual banana adapter to the MULTIMETER INPUTS connector.

b. CHECK—Reading is within the limits shown in Table 4-7 for each calibrator output voltage from 20 Hz to 20 kHz.

Table 4-7
Ac Voltage Readout Checks

Calibrator Ac Voltage (V)	Display Readout Limits (V)
0.4	.3954 to .4046
4	3.954 to 4.046
40	39.54 to 40.46
300	296.4 to 303.6

c. Disconnect the test equipment from the instrument.

10. Check Channel 1 Dc Volts

a. Select the CH 1 V function.

b. Set:

CH 1 VOLTS/DIV	50 mV
Channel 1 Input Coupling	GND

c. CHECK—Reading is between −.0012 V and .0012 V.

d. Set the Channel 1 Input Coupling switch to DC.

e. CHECK—Reading is between −.0012 V and .0012 V.

f. Connect the dc volts calibrator via a female-to-dual banana adapter and a 50-Ω cable to the CH 1 OR X & DMM input connector.

g. CHECK—Reading is within the limits shown in Table 4-8 for each CH 1 VOLTS/DIV switch setting and calibrator voltage combination.

Table 4-8
Dc CH 1 Readout Checks

CH 1 VOLTS/DIV Switch Setting	Calibrator Dc Voltage (V)	Display Readout Limits (V)
50 mV	0.4	.3982 to .4018
0.5 V	4	3.982 to 4.018
5 V	40	39.82 to 40.18

h. Disconnect the test equipment from the instrument.

i. Connect the dc volts calibrator via a female-to-dual banana adapter, a probe-tip-to-bnc adapter, and the 10X probe to the CH 1 OR X & DMM input connector.

j. CHECK—Reading is within the limits shown in Table 4-9 for each CH 1 VOLTS/DIV switch setting and calibrator voltage combination.

Table 4-9
Dc Probe Readout Checks

CH 1 VOLTS/DIV Switch Setting	Calibrator Dc Voltage (V)	Display Readout Limits (V)
50 mV	4	3.974 to 4.026
0.5 V	40	39.74 to 40.26
5 V	400	397.4 to 402.6

k. Disconnect the test equipment from the instrument.

11. Check Channel 1 Ac Volts

a. Set:

CH 1 VOLTS/DIV	50 mV
Channel 1 Input Coupling	AC RMSV

b. Connect the ac volts calibrator via a female-to-dual banana adapter and a 50-Ω cable to the CH 1 OR X & DMM input connector.

c. CHECK—Reading is within the limits shown in Table 4-10 for each CH 1 VOLTS/DIV switch setting and calibrator voltage combination at 20 kHz.

Table 4-10
Ac CH 1 Readout Checks

CH 1 VOLTS/DIV Switch Setting	Calibrator Ac Voltage (V)	Display Readout Limits (V)
50 mV	0.4	.3954 to .4046
0.5 V	4	3.954 to 4.046
5 V	40	39.54 to 40.46

d. Disconnect the test equipment from the instrument.

e. Connect the ac volts calibrator via a female-to-dual banana adapter, a probe-tip-to-bnc adapter, and a 10X probe to the CH 1 OR X & DMM input connector.

f. Set the CH 1 VOLTS/DIV switch to 50 mV.

g. Change the calibrator output voltage to 4 V.

h. ADJUST—The probe compensation (see the "Operating Instructions" section of this manual) for a reading of 4.000 V.

i. CHECK—Reading is within the limits shown in Table 4-11 for each CH 1 VOLTS/DIV switch setting and calibrator voltage combination at 20 kHz.

Table 4-11
Ac Probe Readout Checks

CH 1 VOLTS/DIV Switch Setting	Calibrator Ac Voltage (V)	Display Readout Limits (V)
0.5 V	40	39.14 to 40.86
5 V	300	293.4 to 306.6

j. Disconnect the test equipment from the instrument.

12. Check Ohms

a. Select the Ω function.

b. Connect one DMM test lead to the instrument and short the tip to the other DMM input.

c. CHECK—Reading is less than .20 Ω.

d. Disconnect the test lead from the instrument.

e. Connect the ohms calibrator via a female-to-dual banana adapter, a 50-Ω cable, and a female-to-dual banana adapter to the MULTIMETER INPUTS connector.

NOTE

The connection resistance must be less than 200 mΩ. Compensate for any measurement error in the 10- and 100-Ω checks by noting the reading obtained when the calibrator output is shorted and adjust the readings accordingly. Alternately, use the 4-wire sensing capability of the calibrator to eliminate measurement error.

f. CHECK—Reading is within the limits shown in Table 4-12 for each calibrator output resistance.

Table 4-12
Resistance Readout Checks

Calibrator Resistance (ohm)	Display Readout Limits (ohm)
10	9.77 to 10.23
100	99.6 to 100.4
1 k	.996 k to 1.004 k
10 k	9.96 k to 10.04 k
100 k	99.6 k to 100.4 k
1 M	.996 M to 1.004 M
10 M	9.96 M to 10.04 M

g. Disconnect the test equipment from the instrument.

NOTE

The next two checks use two high-resistance precision resistors. To preserve the accuracy of these resistors, store them in a clean, dry environment and do not allow finger contact or other forms of contamination on the resistor body. If contamination is suspected, wash the resistor body with isopropyl alcohol and air dry. If exposed to excessive humidity, bake the resistors at 200° F for 4 hours.

h. Connect the DMM test leads to the instrument; then connect the 150 MΩ precision resistor to the test leads.

i. CHECK—Reading is between 148.4 MΩ and 151.6 MΩ.

j. Disconnect the 150 MΩ resistor and connect the 1.5 GΩ precision resistor to the test leads.

k. CHECK—Reading is between 1.34 GΩ and 1.66 GΩ.

l. Disconnect the test equipment from the instrument.

13. Check Diode Forward Drop

a. Select UPPER FUNCTIONS and push in the FREQ, PER, and WIDTH buttons simultaneously to enter the self-test mode.

b. Push and release the SGL SWP button until S6 is displayed.

c. Select the DCV function.

d. Set the Channel 1 Input Coupling switch to GND.

e. Connect the dc volts calibrator via a female-to-dual banana adapter, a 50-Ω cable, and a female-to-dual banana adapter to the MULTIMETER INPUTS connector.

f. Set the calibrator to produce a 2.5-V output.

g. CHECK—Reading is Fd 2.474 V to 2.526 V.

h. Disconnect the test equipment from the instrument.

14. Check Temperature

a. Set the Channel 1 Input Coupling switch to AC RMSV and push the SGL SWP button once.

b. Select the TEMP function.

c. Connect the ohms calibrator via a female-to-dual banana adapter, a 50-Ω cable, and a female-to-dual banana adapter to the MULTIMETER INPUTS connector.

d. Set the calibrator to produce a 100-Ω output resistance.

e. CHECK—Reading is between −1.5°C and 1.5°C.

15. Check Normal Mode Rejection

a. Select the DCV function.

b. Set the calibrator to produce a 50-Hz, 10-V output.

c. CHECK—Reading is between −.0316 V and .0316 V.

16. Check Common Mode Rejection

a. Connect the test setup as shown in Figure 4-1.

b. Select the AC RMSV function.

c. Set the ac volts calibrator to produce a 60-Hz, 3.5-V output.

d. CHECK—Reading is between −.0035 V and .0035 V.

e. Disconnect the test equipment from the instrument.

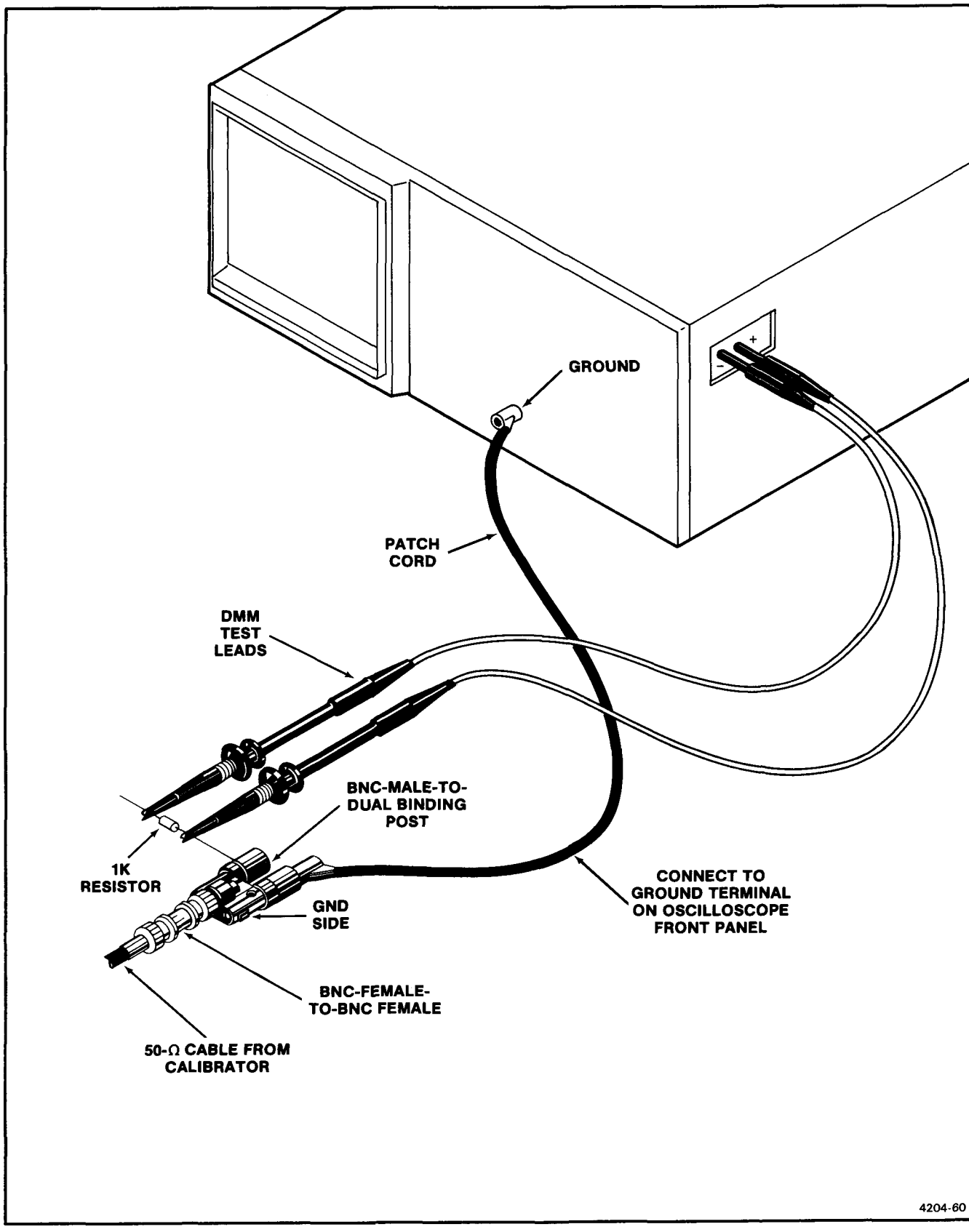

Figure 4-1. Test setup for DMM common mode check.

ADJUSTMENT PROCEDURE

INTRODUCTION

PURPOSE

The "Adjustment Procedure" is a set of logically sequenced instructions intended to return the instrument to conformance with the Performance Requirement statements listed in Table 1-1. Adjustments contained in this procedure should only be performed after checks from the "Performance Check Procedure" (Section 4) have indicated a need for readjustment or after repairs have been made to the instrument.

STRUCTURE

This procedure is structured into four major subsections, each of which can be performed independently to permit adjustment of individual sections of the instrument. For example, if only the Vertical section fails to meet the Performance Requirements or has had repairs made, it can be readjusted with little or no effect on other sections of the instrument.

The Power Supply section, however, affects all other sections of the instrument. Therefore, if repairs or readjustments have been made that change the absolute value of any of the supply voltages, the entire Adjustment Procedure should be performed.

At the beginning of each subsection is a list of all the front-panel control settings required to prepare the instrument for performing Step 1 in that subsection. Each succeeding step within a subsection should be performed in sequence and in its entirety to ensure that control settings will be correct for ensuing steps. All steps within a subsection should be completed.

TEST EQUIPMENT

The test equipment listed in Table 4-1 is a complete list of the equipment required to accomplish both the "Performance Check Procedure" in section 4 and the "Adjustment Procedure" in this section. To assure accurate measurements, it is important that test equipment used for making these checks meet or exceed the specifications described in Table 4-1. When considering use of equipment other than that recommended, utilize the "Minimum Specification" column to determine whether available test equipment will suffice.

Detailed operating instructions for test equipment are not given in this procedure. If more operating information is required, refer to the appropriate test-equipment instruction manual.

LIMITS AND TOLERANCES

The limits and tolerances stated in this procedure are instrument specifications only if they are listed in the "Performance Requirements" column of Table 1-1. Tolerances given are applicable only to the instrument undergoing adjustment and do not include test-equipment error. Adjustment of the instrument must be accomplished at an ambient temperature between +18°C and +28°C, and the instrument must have had a warm-up period of at least 30 minutes.

ADJUSTMENT INTERACTION

Some adjustments interact with and affect other adjustment settings. Table 5-1 identifies these interaction areas. Refer to this table if a partial procedure is performed or if a circuit requires readjustment due to a component replacement. To use Table 5-1, first find the adjustment that was made (extreme left column). Then move to the right, across the row, until you come to a darkened square. From the darkened square, move up the column to find the interactive adjustment. Check the accuracy and, if necessary, readjust the adjustment.

PREPARATION FOR ADJUSTMENT

The instrument cabinet must be removed to perform the Adjustment Procedure. See the "Cabinet" removal and replacement instructions located in the "Maintenance" section of the manual. When making some adjustments in the oscilloscope section of the instrument, the CTM circuit board has to be lifted up and latched to allow access to the adjustments. See the "CTM Circuit Board" procedure in the "Maintenance" section.

All test equipment items listed in Table 4-1 are required to accomplish a complete Adjustment Procedure. At the beginning of each subsection there is an equipment-required list showing only the test equipment necessary for performing the steps in that subsection. In this list, the item number following each piece of equipment corresponds to the item number listed in Table 4-1.

Before performing this procedure, do not preset any internal adjustments and do not change the −8.6-V power-supply adjustment. Altering this adjustment may necessitate a complete readjustment of the instrument, whereas only a partial adjustment might otherwise be required. Only change an internal adjustment setting if a Performance Characteristic cannot be met with the original setting. If it is necessary to change the setting of an internal adjustment, check Table 5-1 for possible adjustment interactions.

Before performing any procedure in this section, set the POWER switch to ON and allow a 30-minute warm-up period.

The most accurate display adjustments are made with a stable, well-focused, low-intensity display. Unless otherwise noted, adjust the INTENSITY, FOCUS, and TRIGGER LEVEL controls as needed to view the display.

Table 5-1
Adjustment Interactions

Adjustments or Replacements Made	Adjustments Affected																						
	TRACE ALIGNMENT	GEOMETRY	2/5mv DC BALANCE	CH 1 VAR BALANCE	MF/LF GAIN BAL & FREQ COMP	VERTICAL GAIN	ATTENUATOR COMP	DELAY LINE COMP	CH 2 HIGH FREQ MATCH	HORIZ GAIN	HORIZ X10 GAIN	MAGNIFIER REGISTRATION	DELAY DIAL TIMING	HIGH-SPEED TIMING	5ns TIMING AND LINEARITY	TRIGGER OFFSET	TRIGGER SENSITIVITY	SLOPE BALANCE	P-P AUTO TRIGGER CENTERING	CH 1 VOLTS OFFSET	DELAY START	DELAY END	DC VOLTS INPUT OFFSET	DC VOLTS INPUT BIAS
-8.6V POWER SUPPLY	■	■	■	■	■	■	■	■	■	■	■	■	■	■	■	■	■	■	■	■	■	■	■	■
TRACE ALIGNMENT	■																							
GEOMETRY		■								■					■									
2/5mV DC BALANCE			■	■																				
CH 1 VAR BALANCE			■	■																				
MF/LF GAIN BAL & FREQ COMP					■		■																	
VERTICAL GAIN						■		■	■															
ATTENUATOR COMP					■		■																	
DELAY LINE COMP								■	■															
HORIZ GAIN										■	■			■	■									
HORIZ X10 GAIN											■	■		■	■									
HIGH-SPEED TIMING														■	■									
TRIGGER OFFSET																■		■	■					
TRIGGER SENSITIVITY																	■	■						
SLOPE BALANCE																	■	■						
CH 1 MF/LF COMP																				■				
CH 1 10X LF COMP																				■				
DELAY START																					■	■		
DELAY END																					■	■		
DC VOLTS INPUT OFFSET																							■	■
DC VOLTS INPUT BIAS																							■	■
CRT REPLACEMENT	■	■				■		■	■	■	■	■	■	■	■		■	■						

4204-49

INDEX TO ADJUSTMENT PROCEDURE STEPS

Power Supply and CRT Display

1. Check/Adjust Power Supply Dc Levels 5-4
2. Check High-Voltage Supply 5-5
3. Adjust CRT Grid Bias 5-5
4. Adjust Astigmatism 5-5
5. Adjust Trace Alignment 5-5
6. Adjust Geometry 5-5

Vertical

1. Adjust Attenuator Step Balance 5-6
2. Adjust 2/5 mV Dc Balance 5-6
3. Adjust Channel 1 Variable Balance 5-7
4. Adjust Channel 2 Invert Balance 5-7
5. Adjust MF/LF Compensation and Gain Balance 5-7
6. Adjust Attenuator Compensation 5-8
7. Adjust Vertical Gain 5-9
8. Check Deflection Accuracy and Variable Range 5-9
9. Check Input Coupling 5-10
10. Check Alternate Operation 5-10
11. Check Chop Operation 5-10
12. Adjust High-Frequency Compensation, Delay Line Compensation, and Channel 2 High-Frequency Compensation 5-10
13. Adjust 2-mV Peaking Compensation 5-11
14. Check Trigger View Gain 5-11
15. Check Position Range 5-12
16. Check Bandwidth Limit Operation 5-12
17. Check Bandwidth 5-12
18. Check Channel Isolation 5-13
19. Check Common-Mode Rejection Ratio 5-13
20. Check External Z-Axis Operation 5-13
21. Check Probe Adjust Operation 5-14
22. Check Input Gate Current 5-14

Horizontal

1. Adjust Horizontal Amplifier Gain 5-15
2. Adjust X10 Horizontal Amplifier Gain 5-15
3. Adjust Magnifier Registration 5-16
4. Check Sweep Length 5-16
5. Check Position Range 5-16
6. Check Variable Range 5-16
7. Adjust High-Speed Timing 5-16
8. Adjust 5-ns Timing and Linearity 5-17
9. Check Timing Accuracy and Linearity 5-17
10. Check Delay Jitter 5-18
11. Check Sweep Separation 5-18
12. Adjust X Gain 5-18
13. Check X Bandwidth 5-18
14. Check A-Sweep Holdoff 5-19

Trigger

1. Adjust Internal and External Trigger Offset 5-20
2. Adjust Trigger Sensitivity 5-21
3. Adjust Slope Balance 5-21
4. Adjust P-P Auto Trigger Centering 5-21
5. Check Internal Triggering 5-21
6. Check External Triggering 5-22
7. Check External Trigger Ranges 5-23
8. Check Single Sweep Operation 5-23

CTM

1. Adjust Oscillator Frequency 5-24
2. Check Period 5-25
3. Check Width 5-25
4. Adjust Delay Time 5-25
5. Check Delta Time 5-26
6. Adjust Dc Volts Zero 5-26
7. Adjust Dc Volts Accuracy 5-26
8. Adjust Ac Volts Zero 5-27
9. Adjust Ac Volts Accuracy 5-27
10. Adjust Channel 1 Dc Volts 5-27
11. Adjust Channel 1 Ac Volts 5-28
12. Adjust Beeper Volume 5-29
13. Check Ohms 5-29
14. Check Diode Forward Drop 5-30
15. Check Temperature 5-30
16. Check Normal Mode Rejection 5-30
17. Check Common Mode Rejection 5-30

POWER SUPPLY AND CRT DISPLAY

Equipment Required (see Table 4-1):

Leveled Sine-Wave Generator (Item 2)	Digital Voltmeter (Item 22)
Time-Mark Generator (Item 3)	DC Voltmeter (Item 24)
50-Ω BNC Cable (Item 8)	Screwdriver (Item 25)
50-Ω BNC Termination (Item 9)	

See **ADJUSTMENT LOCATIONS 1**

at the back of this manual for test point and adjustment locations.

INITIAL CONTROL SETTINGS

Vertical

POSITION (both)	Midrange
VERTICAL MODE	CH 1
CH 1 VOLTS/DIV	5 mV
CH 1 VOLTS/DIV Variable	CAL detent
Channel 1 Input Coupling	GND

Horizontal

POSITION	Midrange
HORIZONTAL MODE	A
A SEC/DIV	X-Y
SEC/DIV Variable	CAL detent
X10 Magnifier	Off (knob in)

A TRIGGER

VAR HOLDOFF	NORM
Mode	P-P AUTO
SLOPE	OUT
LEVEL	Midrange
A&B INT	VERT MODE
A SOURCE	INT

PROCEDURE STEPS

1. Check/Adjust Power Supply DC Levels (R938)

NOTE

Review the information at the beginning of the Adjustment Procedure before starting this step.

a. Connect the digital voltmeter low lead to chassis ground and connect the volts lead to the −8.6-V supply (TP961).

b. CHECK—Voltmeter reading is between −8.56 and −8.64 V. If the reading is within these limits, skip to part d.

c. ADJUST—The −8.6 V Adj potentiometer (R938) for a voltmeter reading of −8.6 V.

d. CHECK—Voltage levels of the remaining power supplies listed in Table 5-2 are within the specified limits.

Table 5-2
Power Supply Limits

Power Supply	Test Point	Reading (V)
−8.6 V	TP961	−8.56 to −8.64
+5.0 V	W968	+4.85 to +5.15
+8.6 V	W960	+8.43 to +8.77
+30 V	W956	+29.1 to +30.9
+100 V	W954	+97.0 to +103.0

e. Disconnect the test equipment from the instrument.

2. Check High-Voltage Supply

WARNING

Instrument must be turned off when removing or replacing the crt cover and cap.

a. Remove the crt cover and cap and connect a dc voltmeter capable of measuring at least −2500 V between pin 2 of the crt socket and chassis ground. Pin 2 of the crt is negative with respect to the chassis.

b. CHECK—Voltmeter reading is between −1900 V and −2100 V.

c. Disconnect the voltmeter leads and replace the crt cap and cover.

3. Adjust CRT Grid Bias (R851)

a. Connect a 50-Ω termination to the EXT Z AXIS INPUT connector located on the rear panel.

b. Adjust the front-panel FOCUS control to produce a well-defined dot.

c. Rotate the A INTENSITY control fully counterclockwise.

d. ADJUST—Grid Bias (R851) for a visible dot. Then back off the Grid Bias potentiometer until the dot just disappears.

e. Disconnect the 50-Ω termination from the EXT Z AXIS INPUT connector.

4. Adjust Astigmatism (R874)

a. Set:

A INTENSITY	Visible display
Channel 1 Input Coupling	DC
A SEC/DIV	5 μs

b. Connect the leveled sine-wave generator output via a 50-Ω cable and a 50-Ω termination to the CH 1 OR X input connector.

c. Set the generator to produce a 50-kHz, 4-division display.

d. ADJUST—Astig (R874) and the front-panel FOCUS control for the best defined waveform.

e. Disconnect the test equipment from the instrument.

5. Adjust Trace Alignment

a. Position the trace to the center horizontal graticule line.

b. ADJUST—The front-panel TRACE ROTATION control for optimum alignment of the trace with the center horizontal graticule line.

6. Adjust Geometry (R870)

a. Set:

CH 1 VOLTS/DIV	50 mV
A SEC/DIV	0.1 ms

b. Connect 50-μs time markers from the time-mark generator via a 50-Ω cable and a 50-Ω termination to the CH 1 OR X input connector.

c. Adjust the Channel 1 POSITION control to position the baseline part of the display below the bottom horizontal graticule line.

d. Adjust the SEC/DIV Variable control for 5 markers per division.

e. ADJUST—Geom (R870) for minimum curvature of the time markers at the left and right edges of the graticule.

f. Set the Channel 1 Input Coupling switch to GND.

g. ADJUST—Geom (R870) for minimum curvature of the baseline trace when positioned at the top and bottom horizontal graticule lines using the Channel 1 POSITION control.

h. Set the Channel 1 Input Coupling switch to DC.

i. Repeat parts e through h for optimum compromise between the vertical and horizontal displays.

j. Disconnect the test equipment from the instrument.

VERTICAL

Equipment Required (See Table 4-1):

Calibration Generator (Item 1)	BNC T-Connector (Item 12)
Leveled Sine-Wave Generator (Item 2)	Adapter (Item 13)
Ac Calibration System (Item 6)	Normalizer (Item 21)
Two 50-Ω BNC Cables (Item 8)	Screwdriver (Item 25)
50-Ω BNC Termination (Item 9)	Low-Capacitance Alignment Tool (Item 26)
Dual-Input Coupler (Item 10)	10X Probe (included with instrument)
10X Attenuator (Item 11)	

See **ADJUSTMENT LOCATIONS 1** *and* **ADJUSTMENT LOCATIONS 2** *at the back of this manual for test point and adjustment locations.*

INITIAL CONTROL SETTINGS

Vertical (Both Channels)

POSITION	Midrange
VERTICAL MODE	CH 1
BW LIMIT	On (button in)
VOLTS/DIV (both)	50 mV
VOLTS/DIV Variable	CAL detent
INVERT	Off (button out)
Input Coupling (both)	GND

Horizontal

POSITION	Midrange
HORIZONTAL MODE	A
A SEC/DIV	0.5 ms
SEC/DIV Variable	CAL detent
X10 Magnifier	Off (knob in)

A TRIGGER

VAR HOLDOFF	NORM
Mode	P-P AUTO
SLOPE	OUT
LEVEL	Midrange
A&B INT	VERT MODE
A SOURCE	INT
A EXT COUPLING	AC

PROCEDURE STEPS

1. Adjust Attenuator Step Balance (R10 and R60)

a. Position the trace on the center horizontal graticule line using the Channel 1 POSITION control.

b. Set the CH 1 VOLTS/DIV switch to 5 mv.

c. ADJUST—Ch 1 Step Bal (R10) to set the trace on the center horizontal graticule line.

d. Set the CH 1 VOLTS/DIV switch to 50 mV.

e. Repeat parts a through d until there is no trace shift when changing the CH 1 VOLTS/DIV switch from 50 mV to 5 mV.

f. Set the VERTICAL MODE switch to CH 2.

g. Repeats parts a through e for Channel 2, adjusting Ch 2 Step Bal (R60) in part c.

2. Adjust 2/5 mV Dc Balance (R83 and R33)

a. Set the CH 2 VOLTS/DIV switch to 5 mV.

b. Position the trace on the center horizontal graticule line using the Channel 2 POSITION control.

c. Set the CH 2 VOLTS/DIV switch to 2 mV.

d. ADJUST—Ch 2 2/5-mV Dc Bal (R83) to set the trace on the center horizontal graticule line.

e. Repeat parts a through d until there is no trace shift when changing the CH 2 VOLTS/DIV switch from 5 mV to 2 mV.

f. Set the VERTICAL MODE switch to CH 1.

g. Repeat parts a through e for Channel 1, adjusting Ch 1 2/5-mV Dc Bal (R33) in part d.

3. Adjust Channel 1 Variable Balance (R25)

a. Set both VOLTS/DIV switches to 10 mV.

b. Rotate the CH 1 VOLTS/DIV Variable control fully counterclockwise.

c. Position the trace on the center horizontal graticule line using the Channel 1 POSITION control.

d. Rotate the CH 1 VOLTS/DIV Variable control clockwise to the CAL detent.

e. ADJUST—Ch 1 Var Bal (R25) to set the trace to the center horizontal graticule line.

f. Repeat parts b through e until there is no trace shift between the fully clockwise and the fully counterclockwise positions of the CH 1 VOLTS/DIV Variable control.

g. Return the CH 1 VOLTS/DIV Variable control to the CAL detent.

4. Adjust Channel 2 Invert Balance (R75)

a. Set the VERTICAL MODE switch to CH 2.

b. Position the trace on the center horizontal graticule line using the Channel 2 POSITION control.

c. Set the INVERT button to On (button in).

d. ADJUST—Ch 2 Invert Bal (R75) to set the trace to the center horizontal graticule line.

e. Set the INVERT button to Off (button out).

f. Repeat parts b through e until there is no trace shift when switching the INVERT button between the On and Off positions.

g. Repeat Steps 2 and 3 for Channel 1 until no further improvement is noted.

h. Repeat Steps 2 and 4 for Channel 2 until no further improvement is noted.

5. Adjust MF/LF Compensation and Gain Balance (C53, R97, C3, and R47)

a. Set:

VERTICAL MODE	CH 2
VOLTS/DIV (both)	10 mV
Input Coupling (both)	DC
A SEC/DIV	20 μs

b. Connect the high-amplitude square wave output via a 50-Ω cable, a 10X attenuator, and a 50-Ω termination to the CH 2 OR Y input connector.

c. Set the generator to produce a 10-kHz, 5-division display.

d. Set the top of the display on the center horizontal graticule line using the Channel 2 POSITION control.

e. ADJUST—Ch 2 MF/LF Comp (C53) and Ch 2 MF/LF Gain Bal (R97) for the best front corner and flat top.

f. Move the cable from the CH 2 OR Y input connector to the CH 1 OR X input connector. Set the VERTICAL MODE switch to CH 1.

g. Set the top of the display on the center horizontal graticule line using the Channel 1 POSITION control.

NOTE

If C3 needs to be adjusted in the following step, the DMM Channel 1 Volts accuracy will be affected. After performing part h, Step 6 in the "CTM" section must be checked to assure DMM accuracy.

h. ADJUST—Ch 1 MF/LF Comp (C3) and Ch 1 MF/LF Gain Bal (R47) for the best front corner and flat top.

6. Adjust Attenuator Compensation (C12, C62, C55, C5, C51, C61, C54, C1, C11, and C4)

a. Set both VOLTS/DIV switches to 0.1 V.

b. Set the generator to produce a 10-kHz, 5-division display.

c. Set the top of the display on the center horizontal graticule line using the Channel 1 POSITION control.

NOTE

If C12 needs to be adjusted in the following step, the DMM Channel 1 Volts accuracy will be affected. After performing part d, Step 6 in the "CTM" section must be checked to assure DMM accuracy.

d. ADJUST—Ch 1 10X LF Comp (C12) for best front corner.

e. Move the cable from the CH 1 OR X input connector to the CH 2 OR Y input connector. Set the VERTICAL MODE switch to CH 2.

f. ADJUST—Ch 2 10X LF Comp (C62) for best front corner.

g. Set both VOLTS/DIV switches to 1 V.

h. Remove the 10X attenuator from the input signal path.

i. ADJUST—Ch 2 100X LF Comp (C55) for best front corner.

j. Move the cable from the CH 2 OR Y input connector to the CH 1 OR X input connector. Set the VERTICAL MODE switch to CH 1.

k. ADJUST—Ch 1 100X LF Comp (C5) for best front corner.

l. Disconnect the test setup.

m. Set:

VERTICAL MODE	CH 2
CH 2 VOLTS/DIV	10 mV
Input Coupling (both)	AC
A SEC/DIV	0.2 ms

n. Connect the high-amplitude square wave output via a 50-Ω cable, a 10X attenuator, a 50-Ω termination, and the precision normalizer to the CH 2 OR Y input connector.

o. Set the generator to produce a 1-kHz, 5-division display.

p. Set the top of the display on the center horizontal graticule line using the Channel 2 POSITION control.

q. ADJUST—Ch 2 Input Standardizer (C51) for best flat top.

r. Set the CH 2 VOLTS/DIV switch to 0.1 V.

s. Remove the 10X attenuator from the input signal path.

t. ADJUST—Ch 2 10X Input C (C61) for best flat top.

u. Set the CH 2 VOLTS/DIV switch to 1 V.

v. Remove the terminator from the input signal path and set the generator to produce a 5-division display.

w. ADJUST—Ch 2 100X Input C (C54) for best flat top.

x. Disconnect the test equipment from the instrument.

y. Set:

VERTICAL MODE	CH 1
CH 1 VOLTS/DIV	20 mV
CTM	CH 1 VOLTS

z. Connect the Ac Calibration System output via a 50-Ω cable to the CH 1 OR X input connector.

aa. Set the calibrator to produce a 20-kHz, 400-mV output signal.

ab. Note the CTM display reading for use in parts ad, af, and ah.

ac. Insert the precision normalizer into the signal path and increase the calibrator output voltage to 800 mV.

ad. ADJUST—Ch 1 Input Standardizer (C1) for the same display reading as that noted in part ab.

ae. Set the CH 1 VOLTS/DIV switch to 0.1 V and increase the calibrator output voltage to 8 V.

af. ADJUST—Ch 1 10X Input C (C11) for a display reading 10 times greater than that noted in part ab.

ag. Set the CH 1 VOLTS/DIV switch to 1 V and increase the calibrator output voltage to 80 V.

ah. ADJUST—Ch 1 100X Input C (C4) for a display reading 100 times greater than that noted in part ab.

ai. Disconnect the test equipment from the instruments.

7. Adjust Vertical Gain (R145, R195, R76, and R26)

a. Set:

VOLTS/DIV (both)	10 mV
Input Coupling (both)	DC

b. Connect a 50-mV standard-amplitude signal via a 50-Ω cable to the CH 1 OR X input connector.

c. ADJUST—Ch 1 Gain (R145) for an exact 5-division display.

d. Move the cable from the CH 1 OR X input connector to the CH 2 OR Y input connector. Set the VERTICAL MODE switch to CH 2.

e. ADJUST—Ch 2 Gain (R195) for an exact 5-division display.

f. Change the generator output to 10 mV and set both VOLTS/DIV switches to 2 mV.

g. ADJUST—Ch 2 2-mV Gain (R76) for an exact 5-division display.

h. Move the cable from the CH 2 OR Y input connector to the CH 1 OR X input connector. Set the VERTICAL MODE switch to CH 1.

i. ADJUST—Ch 1 2-mV Gain (R26) for an exact 5-division display.

j. Set both Input Coupling switches to GND.

k. CHECK—That no trace shift occurs when switching between the 5 mV and 2 mV positions of the CH 1 VOLTS/DIV switch. If trace shift is observed, repeat Step 2 of this procedure.

l. Set the VERTICAL MODE switch to CH 2.

m. CHECK—That no trace shift occurs when switching between the 5 mV and 2 mv positions of the CH 2 VOLTS/DIV switch. If trace shift is observed, repeat Step 2 of this procedure.

8. Check Deflection Accuracy and Variable Range

a. Set:

VERTICAL MODE	CH 1
Input Coupling (both)	DC

b. CHECK—Deflection accuracy is within the limits given in Table 5-3 for each CH 1 VOLTS/DIV switch setting and corresponding standard-amplitude signal. When at the 20-mV VOLTS/DIV switch setting, rotate the CH 1 VOLTS/DIV Variable control fully counterclockwise and CHECK that the display decreases to 2 divisions or less. Then return the CH 1 VOLTS/DIV Variable control to the CAL detent and continue with the 50-mV check.

Table 5-3
Deflection Accuracy Limits

VOLTS/DIV Switch Setting	Standard Amplitude Signal	Vertical Deflection (Divisions)	Accuracy Limits (Divisions)
2 mV	10 mV	5	4.90 to 5.10
5 mV	20 mV	4	3.92 to 4.08
10 mV	50 mV	5	4.90 to 5.10
20 mV	0.1 V	5	4.90 to 5.10
50 mV	0.2 V	4	3.92 to 4.08
0.1 V	0.5 V	5	4.90 to 5.10
0.2 V	1 V	5	4.90 to 5.10
0.5 V	2 V	4	3.92 to 4.08
1 V	5 V	5	4.90 to 5.10
2 V	10 V	5	4.90 to 5.10
5 V	20 V	4	3.92 to 4.08

c. Move the cable from the CH 1 OR X input connector to the CH 2 OR Y input connector. Set the VERTICAL MODE switch to CH 2.

d. Repeat part b using the Channel 2 controls.

9. Check Input Coupling

a. Set both VOLTS/DIV switches to 10 mV.

b. Set the calibration generator to produce a 20-mV signal.

c. Set the bottom of the signal on the center horizontal graticule line using the Channel 2 POSITION control.

d. Set the Channel 2 Input Coupling switch to AC.

e. CHECK—Display is centered about the center horizontal graticule line.

f. Move the cable from the CH 2 OR Y input connector to the CH 1 OR X input connector. Set the VERTICAL MODE switch to CH 1.

g. Repeat parts c through e using the Channel 1 controls.

h. Disconnect the test equipment from the instrument.

10. Check Alternation Operation

a. Set:

VERTICAL MODE	BOTH and ALT
Input Coupling (both)	GND
A and B SEC/DIV	50 ms
A&B INT	CH 1

b. Position the Channel 1 and Channel 2 traces about 2 divisions apart using the Channel 1 and Channel 2 POSITION controls.

c. CHECK—Sweeps alternate for all the A SEC/DIV switch settings.

NOTE

At sweep speeds of 2 ms per division or faster, the trace alternations occur too rapidly to be observed.

11. Check Chop Operation

a. Set:

VERTICAL MODE	BOTH and CHOP
A SEC/DIV	1 μs
A&B INT	VERT MODE
A SOURCE	EXT

b. Connect the 10X probe to the EXT INPUT connector.

c. Connect the 10X probe tip to TP537.

d. CHECK—Period of one complete square-wave cycle is between 1.6 and 2.6 horizontal divisions.

e. Disconnect the X10 probe from TP537 and the EXT INPUT connector.

f. CHECK—Two traces are visible for all A SEC/DIV switch settings.

12. Adjust High-Frequency Compensation (C237), Delay Line Compensation (R240 and R241), and Channel 2 High-Frequency Compensation (C180)

a. Set:

VERTICAL MODE	CH 1
BW LIMIT	Off (button out)
VOLTS/DIV (both)	10 mV
Input Coupling (both)	DC
A SEC/DIV	0.05 μs
A SOURCE	INT

b. Connect the positive-going fast-rise square wave output via a 50-Ω cable, a 10X attenuator, and a 50-Ω termination to the CH 1 OR X input connector.

c. Set the generator to produce a 1-MHz, 5-division display.

d. Set the top of the display to the center horizontal graticule line using the Channel 1 POSITION control.

e. ADJUST—HF Peak Comp (C237) for 2% overshoot (0.1 division) on the displayed signal.

f. ADJUST—DL Comp1 (R240) and DL Comp2 (R241) for best flat top on the front corner.

g. Repeat parts e and f until no further improvement is noted.

h. Set the CH 1 VOLTS/DIV switch to 5 mV.

i. Set the generator to produce a 5-division display.

j. CHECK—Display aberrations are within 4% (0.2 division or less).

k. Repeat part j for each of the following CH 1 VOLTS/DIV switch settings: 10 mV through 0.5 V. Adjust the generator output and add or remove the 10X attenuator as necessary to maintain a 5-division display at each VOLTS/DIV switch setting.

l. Move the cable from the CH 1 OR X input connector to the CH 2 OR Y input connector. Set the VERTICAL MODE switch to CH 2.

m. Set the generator to produce a 5-division display.

n. Set the top of the display to the center horizontal graticule line using the Channel 2 POSITION control.

o. ADJUST—Ch 2 HF Comp (C180) for 2% overshoot (0.1 division) on the displayed signal.

p. Repeat parts h through k for Channel 2.

13. Adjust 2-mV Peaking Compensation (C76 and C26)

a. Set both VOLTS/DIV switches to 2 mV.

b. Set the generator to produce a 5-division display.

c. Set the top of the display to the center horizontal graticule line using the Channel 2 POSITION control.

d. ADJUST—Ch 2 2-mV Peak Comp (C76) for 2% (0.1 division) overshoot of the displayed signal.

e. Move the cable from the CH 2 OR Y input connector to the CH 1 OR X input connector. Set the VERTICAL MODE switch to CH 1.

f. Repeat parts b through d for Channel 1, adjusting Ch 1 2-mV Peak Comp (C26) in part d.

g. Disconnect the test equipment from the instrument.

14. Check Trigger View Gain

a. Set:

VOLTS/DIV (both)	0.1 V
A SEC/DIV	0.2 ms

b. Connect a 0.5-V standard-amplitude signal via a 50-Ω cable to the CH 1 OR X input connector.

c. While holding in the TRIG VIEW button, use the A TRIGGER LEVEL control to vertically center the display.

d. CHECK—Display amplitude is 4 to 6 divisions while holding in the TRIG VIEW button.

e. Move the cable from CH 1 OR X input connector to the CH 2 OR Y input connector. Set the VERTICAL MODE switch to CH 2.

f. Repeat parts c and d.

g. Move the cable from the CH 2 OR Y input connector to the EXT INPUT connector. Set the A SOURCE switch to EXT.

h. Repeat parts c and d.

i. Set the A EXT COUPLING switch to DC.

j. Repeat parts c and d.

k. Set the A EXT COUPLING switch to DC÷10.

l. Set the generator to produce a 5-V signal.

m. Repeat parts c and d.

15. Check Position Range

a. Set:

VOLTS/DIV (both)	50 mV
Input Coupling (both)	AC
A SOURCE	INT

b. Move the cable from the EXT INPUT connector to the CH 2 OR Y input connector.

c. Set the generator to produce a 0.5-V signal.

d. Adjust the CH 2 VOLTS/DIV Variable control to produce a 4.4-division display. Set the CH 2 VOLTS/DIV switch to 10 mV.

e. CHECK—The bottom and top of the trace may be positioned above and below the center horizontal graticule line by rotating the Channel 2 POSITION control fully clockwise and counterclockwise respectively.

f. Move the cable from the CH 2 OR Y input connector to the CH 1 OR X input connector. Set the VERTICAL MODE switch to CH 1.

g. Repeat parts d and e using the Channel 1 controls.

h. Disconnect the test equipment from the instrument.

NOTE

Install the instrument cabinet for the remaining vertical checks and allow a 20-minute warm-up period before continuing with the Adjustment Procedure. See the "Cabinet" removal and replacement instructions located in the "Maintenance" section of the manual.

16. Check Bandwidth Limit Operation

a. Set:

Vertical POSITION (both)	Midrange
BW LIMIT	On (button in)
VOLTS/DIV Variable (both)	CAL detent
Input Coupling (both)	DC
A SEC/DIV	20 μs

b. Connect the leveled sine-wave generator output via a 50-Ω cable and a 50-Ω termination to the CH 1 OR X input connector.

c. Set the generator to produce a 50-kHz, 6-division display.

d. Increase the generator output frequency until the display amplitude decreases to 4.2 divisions.

e. CHECK—Generator output frequency is between 18 MHz and 22 MHz.

17. Check Bandwidth

a. Set:

BW LIMIT	Off (button out)
VOLTS/DIV (both)	2 mV

b. Set the generator to produce a 50-kHz, 6-division display.

c. CHECK—Display amplitude is 4.2 divisions or greater as the generator output frequency is increased up to the value shown in Table 5-4 for the corresponding VOLTS/DIV switch setting.

Table 5-4
Settings for Bandwidth Checks

VOLTS/DIV Switch Setting	Generator Output Frequency
2 mV	90 MHz
5 mV to 5 V	100 MHz

d. Repeat parts b and c for all indicated CH 1 VOLTS/DIV switch settings, up to the output-voltage upper limit of the sine-wave generator being used.

e. Move the cable from the CH 1 OR X input connector to the CH 2 OR Y input connector. Set the VERTICAL MODE switch to CH 2.

f. Repeat parts b and c for all indicated CH 2 VOLTS/DIV switch settings, up to the output-voltage upper limit of the sine-wave generator being used.

18. Check Channel Isolation

a. Set:

VOLTS/DIV (both)	1 V
Channel 1 Input Coupling	GND
A SEC/DIV	0.1 μs

b. Set the generator to produce a 50-MHz, 5-division display.

c. Set the VERTICAL MODE switch to CH 1.

d. CHECK—Display amplitude is 0.05 division or less.

e. Move the cable from the CH 2 OR Y input connector to the CH 1 OR X input connector.

f. Set:

VERTICAL MODE	CH 2
Channel 1 Input Coupling	DC
Channel 2 Input Coupling	GND

g. CHECK—Display amplitude is 0.05 division or less.

h. Disconnect the test equipment from the instrument.

19. Check Common-Mode Rejection Ratio

a. Set:

VOLTS/DIV (both)	10 mV
INVERT	On (button in)
Channel 2 Input Coupling	DC
A SEC/DIV	50 μs

b. Connect the leveled sine-wave generator output via a 50-Ω cable, a 50-Ω termination, and a dual-input coupler to the CH 1 OR X and CH 2 OR Y input connectors.

c. Set the generator to produce a 50-MHz, 6-division display.

d. Vertically center the display using the Channel 2 POSITION control. Then set the VERTICAL MODE switch to CH 1 and vertically center the display using the Channel 1 POSITION control.

e. Set the VERTICAL MODE switches to BOTH and ADD.

f. CHECK—Display amplitude is 0.6 division or less.

g. If the check in part f meets the requirement, skip to part p. If it does not, continue with part h.

h. Set the VERTICAL MODE switch to CH 1.

i. Set the generator to produce a 50-kHz, 6-division display.

j. Set the VERTICAL MODE switch to BOTH.

k. Adjust the CH 1 or CH 2 VOLTS/DIV Variable control for minimum display amplitude.

l. Set the VERTICAL MODE switch to CH 1.

m. Set the generator to produce a 50-MHz, 6-division display.

n. Set the VERTICAL MODE switch to BOTH.

o. CHECK—Display amplitude is 0.6 division or less.

p. Disconnect the test equipment from the instrument.

20. Check External Z-Axis Operation

a. Set:

VERTICAL MODE	CH 1
CH 1 VOLTS/DIV	1 V
VOLTS/DIV Variable (both)	CAL detent
INVERT	Off (button out)
A SEC/DIV	20 μs

b. Connect the leveled sine-wave generator output via a 50-Ω cable and a T-connector to the CH 1 OR X input connector. Then connect a 50-Ω cable and a 50-Ω termination from the T-connector to the EXT Z-AXIS INPUT connector on the rear panel.

c. Set the generator to produce a 5-V, 50-kHz signal.

d. CHECK—For noticeable intensity modulation. The positive part of the sine wave should be of lower intensity than the negative part.

e. Disconnect the test equipment from the instrument.

21. Check Probe Adjust Operation

a. Set:

CH 1 VOLTS/DIV	10 mV
A SEC/DIV	0.5 ms

b. Connect the 10X probe to the CH 1 OR X input connector and insert the probe tip into the PROBE ADJUST jack on the instrument front panel. If necessary, adjust the probe compensation for a flat-topped square-wave display.

c. CHECK—Display amplitude is 4.75 to 5.25 divisions.

d. Disconnect the probe from the instrument.

22. Check Input Gate Current

a. Set:

VOLTS/DIV (both)	2 mV
Input Coupling (both)	GND

b. Position the trace on the center horizontal graticule line using the Channel 1 POSITION control.

c. CHECK—For 0.1 division or less trace shift while alternating the Channel 1 Input Coupling switch between the AC and GND positions.

d. Set the VERTICAL MODE switch to CH 2.

e. Repeat parts b and c using the Channel 2 controls.

NOTE

To continue with the Adjustment Procedure, remove the instrument cabinet and allow a 30-minute time period to elapse before continuing with the Adjustment Procedure. See the "Cabinet" removal instructions located in the "Maintenance" section of the manual.

HORIZONTAL

Equipment Required (see Table 4-1):

Calibration Generator (Item 1)	50-Ω BNC Termination (Item 9)
Leveled Sine-Wave Generator (Item 2)	Test Oscilloscope (Item 23)
Time-Mark Generator (Item 3)	Screwdriver (Item 25)
50-Ω Cable (Item 8)	Low-Capacitance Alignment Tool (Item 26)

See **ADJUSTMENT LOCATIONS 1** *and* **ADJUSTMENT LOCATIONS 2** *at the back of the manual for test point and adjustment locations.*

INITIAL CONTROL SETTINGS

Vertical

POSITION (both)	Midrange
VERTICAL MODE	CH 1
BW LIMIT	Off (button out)
CH 1 VOLTS/DIV	0.5 V
CH 1 VOLTS/DIV Variable	CAL detent
Channel 1 Input Coupling	DC

Horizontal

POSITION	Midrange
HORIZONTAL MODE	A
A and B SEC/DIV	0.1 ms
SEC/DIV Variable	CAL detent
X10 Magnifier	Off (knob in)
B DELAY TIME POSITION	Fully counterclockwise

B TRIGGER

SLOPE	OUT
LEVEL	Fully clockwise

A TRIGGER

VAR HOLDOFF	NORM
Mode	P-P AUTO
SLOPE	OUT
LEVEL	Midrange
A&B INT	VERT MODE
A SOURCE	INT

PROCEDURE STEPS

1. Adjust Horizontal Amplifier Gain (R740 and R730)

a. Connect 0.1-ms time markers from the time-mark generator via a 50-Ω cable and a 50-Ω termination to the CH 1 OR X input connector.

b. Align the first time marker with the first (extreme left) vertical graticule line using the Horizontal POSITION control.

c. ADJUST—A Sweep Gain (R740) for 1 time marker per division over the center 8 divisions.

NOTE

When making timing measurements, use as a reference the tips of the time markers positioned at the center horizontal graticule line.

d. Set the HORIZONTAL MODE switch to B.

e. ADJUST—B Sweep Gain (R730) for 1 time marker per division.

2. Adjust X10 Horizontal Amplifier Gain (R754)

a. Set:

HORIZONTAL MODE	A
X10 Magnifier	On (knob out)

b. Select 10-μs time markers from the time-mark generator.

c. Align the nearest time marker to the first vertical graticule line with the first graticule line.

d. ADJUST—X10 Gain (R754) for 1 time marker per division.

3. Adjust Magnifier Registration (R749)

a. Set the A SEC/DIV switch to 0.2 ms.

b. Select 1-ms time markers from the time-mark generator.

c. Position the middle time marker to the center vertical graticule line using the Horizontal POSITION control.

d. Set the X10 Magnifier to Off (knob in).

e. ADJUST—Mag Regis (R749) to position the middle time marker to the center vertical graticule line.

f. Set the X10 Magnifier to On (knob out) and CHECK for no horizontal shift in the time marker.

g. Repeat parts c through f until no further improvement is noted.

4. Check Sweep Length

a. Set:

Channel 1 Input Coupling	GND
X10 Magnifier	Off (knob in)

b. Position the start of the sweep at the first vertical graticule line using the Horizontal POSITION control.

c. CHECK—End of the sweep is to the right of the 11th vertical graticule line.

5. Check Position Range

a. Set:

Channel 1 Input Coupling	DC
A SEC/DIV	10 μs

b. Select 10-μs time markers from the time-mark generator.

c. CHECK—Start of the sweep can be positioned to the right of the center vertical graticule line by rotating the Horizontal POSITION control fully clockwise.

d. CHECK—The 11th time marker can be positioned to the left of the center vertical graticule line by rotating the Horizontal POSITION control fully counterclockwise.

e. Select 50-μs time markers from the time-mark generator.

f. Align the 3rd time marker with the center vertical graticule line using the Horizontal POSITION control.

g. Set the X10 Magnifier to On (knob out).

h. CHECK—Magnified time marker can be positioned to the left of the center vertical graticule line by rotating the Horizontal POSITION control fully counterclockwise.

i. CHECK—Start of the sweep can be positioned to the right of the center vertical graticule line by rotating the Horizontal POSITION control fully clockwise.

6. Check Variable Range

a. Set:

Horizontal POSITION	Midrange
A SEC/DIV	0.2 ms
SEC/DIV Variable	Fully counterclockwise
X10 Magnifier	Off (knob in)

b. Select 0.5-ms time markers from the time-mark generator.

c. CHECK—Time markers are 1 division or less apart.

7. Adjust High-Speed Timing (C703 and C713)

a. Set:

A SEC/DIV	0.1 μs
SEC/DIV Variable	CAL detent

b. Select 0.1-μs time markers from the time-mark generator.

c. ADJUST—A High Speed Timing (C703) for 1 time marker per division over the center 8 divisions.

d. Set:

HORIZONTAL MODE	B
A SEC/DIV	0.2 μs
B SEC/DIV	0.1 μs

e. ADJUST—B High Speed Timing (C713) for 1 time marker per division over the center 8 divisions.

8. Adjust 5-ns Timing and Linearity (C775 and C785)

a. Set:

CH 1 VOLTS/DIV	0.2 V
Horizontal POSITION	Midrange
HORIZONTAL MODE	A
A SEC/DIV	0.05 μs
X10 Magnifier	On (knob out)

b. Select 10-ns time markers from the time-mark generator.

c. Align the time markers with the vertical graticule lines using the Horizontal POSITION control.

d. ADJUST—5-ns Timing (C775 and C785 alternately) for one time marker every 2 divisions over the center 8 divisions of the magnified sweep.

e. CHECK—Time markers between the 2nd and 4th vertical graticule lines should be aligned within 0.05 division. If not, a slight compromise between timing and linearity should be made by readjusting the 5-ns Timing capacitors (C775 and C785).

9. Check Timing Accuracy and Linearity

a. Set:

CH 1 VOLTS/DIV	0.5 V
X10 Magnifier	Off (knob in)
A TRIGGER Mode	NORM

b. Select 50-ns time markers from the time-marker generator.

c. Adjust the A TRIGGER LEVEL control for a stable, triggered display.

d. Use the Horizontal POSITION control to align the second time marker with the second vertical graticule line.

e. CHECK—Timing accuracy is within 2% (0.16 division at the 10th vertical graticule line), and linearity is within 5% (0.1 division over any 2 of the center 8 divisions).

NOTE

For checking the timing accuracy of the A SEC/DIV switch settings from 50 ms to 0.5 s, watch the time marker tips only at the 2nd and 10th vertical graticule lines while adjusting the Horizontal POSITION control.

f. Repeat parts c through e for the remaining A SEC/DIV and time-mark generator setting combinations shown in Table 5-5 under the "Normal" column.

Table 5-5
Settings for Timing Accuracy Checks

SEC/DIV Switch Setting	Time-Mark Generator Setting	
	Normal	X10 Magnified
0.05 μs	50 ns	10 ns
0.1 μs	0.1 μs	10 ns
0.2 μs	0.2 μs	20 ns
0.5 μs	0.5 μs	50 ns
1 μs	1 μs	0.1 μs
2 μs	2 μs	0.2 μs
5 μs	5 μs	0.5 μs
10 μs	10 μs	1 μs
20 μs	20 μs	2 μs
50 μs	50 μs	5 μs
0.1 ms	0.1 ms	10 μs
0.2 ms	0.2 ms	20 μs
0.5 ms	0.5 ms	50 μs
1 ms	1 ms	0.1 ms
2 ms	2 ms	0.2 ms
5 ms	5 ms	0.5 ms
10 ms	10 ms	1 ms
20 ms	20 ms	2 ms
50 ms	50 ms	5 ms
A Sweep Only		
0.1 s	0.1 s	10 ms
0.2 s	0.2 s	20 ms
0.5 s	0.5 s	50 ms

g. Set:

A SEC/DIV	0.05 μs
X10 Magnifier	On (knob out)

h. Select 10-ns time markers from the time-mark generator.

i. Use the Horizontal POSITION control to align the first time marker that is 25 ns beyond the start of the sweep with the second vertical graticule line.

j. CHECK—Timing accuracy is within 3% (0.24 division at the 10th vertical graticule line), and linearity is within 5% (0.1 division over any two of the center 8 divisions). Exclude any portion of the sweep past the 100th magnified division.

k. Repeat parts i and j for the remaining A SEC/DIV and time-mark generator setting combinations shown in Table 5-5 under the "X10 Magnified" column.

l. Set:

HORIZONTAL MODE	B
A SEC/DIV	0.1 μs
B SEC/DIV	0.05 μs
X10 Magnifier	Off (knob in)

m. Repeat parts b through k for the B Sweep. Keep the A SEC/DIV switch one setting slower than the B SEC/DIV switch.

10. Check Delay Jitter

a. Set:

A SEC/DIV	0.5 ms
B SEC/DIV	0.5 μs
B DELAY TIME POSITION	Fully clockwise
A TRIGGER Mode	P-P AUTO

b. Select 50-μs time markers from the time-mark generator.

c. Rotate the B DELAY TIME POSITION dial counterclockwise to position time markers consecutively within the graticule area and CHECK that the jitter on the leading edge does not exceed 1 division. Disregard slow drift.

d. Disconnect the test equipment from the instrument.

11. Check Sweep Separation

a. Set:

HORIZONTAL MODE	ALT
A and B SEC/DIV	0.5 ms

b. Use the Channel 1 POSITION control to set the A Sweep at the center horizontal graticule line.

c. CHECK—The B Sweep can be positioned more than 3.5 divisions above and below the A Sweep when the A/B SWP SEP control is rotated fully clockwise and counterclockwise respectively.

12. Adjust X Gain (R760)

a. Set:

CH 1 VOLTS/DIV	10 mV
A SEC/DIV	X-Y

b. Connect the standard-amplitude generator output via a 50-Ω cable to the CH 1 OR X input connector.

c. Set the generator to produce a 50-mV signal. Vertically center the trace using the Channel 2 POSITION control.

d. ADJUST—X Gain (R760) for exactly 5 divisions of horizontal deflection.

e. Disconnect the test equipment from the instrument.

13. Check X Bandwidth

a. Connect the leveled sine-wave generator output via a 50-Ω cable and a 50-Ω termination to the CH 1 OR X input connector.

b. Set the generator to produce a 5-division horizontal display at an output frequency of 50 kHz.

c. Increase the generator output frequency to 3 MHz.

d. CHECK—Display is at least 3.5 horizontal divisions.

e. Disconnect the test equipment from the instrument.

14. Check A-Sweep Holdoff

a. Set:

HORIZONTAL MODE	A
A SEC/DIV	1 ms
VAR HOLDOFF	NORM

b. Connect the test oscilloscope and its 10X probe tip to the front end of R707 (toward the front panel) which is located on the Timing circuit board.

c. CHECK—The A-Sweep holdoff is greater then 3 ms but less than 7 ms.

d. Rotate the VAR HOLDOFF control to the maximum clockwise position (MAX).

e. CHECK—The A-Sweep holdoff has increased by a factor of 10 or more.

f. Disconnect the test oscilloscope 10X probe from R707.

TRIGGER

Equipment Required (see Table 4-1):

Leveled Sine-Wave Generator (Item 2)	Digital Voltmeter (Item 22)
50-Ω BNC Cable (Item 8)	Screwdriver (Item 25)
50-Ω BNC Termination (Item 9)	

See **ADJUSTMENT LOCATIONS 1** *and* **ADJUSTMENT LOCATIONS 3** *at the back of the manual for test point and adjustment locations.*

INITIAL CONTROL SETTINGS

Vertical (Both Channels)

POSITION	Midrange
VERTICAL MODE	BOTH-ALT
BW LIMIT	Off (button out)
VOLTS/DIV (both)	0.5 V
VOLTS/DIV Variable	CAL detent
INVERT	Off (button out)
Input Coupling (both)	GND

Horizontal

POSITION	Midrange
HORIZONTAL MODE	A
A and B SEC/DIV	1 ms
SEC/DIV Variable	CAL detent
X10 Magnifier	Off (knob in)
B DELAY TIME POSITION	Fully counterclockwise

B TRIGGER

SLOPE	OUT
LEVEL	Midrange

A TRIGGER

VAR HOLDOFF	NORM
Mode	P-P AUTO
SLOPE	OUT
LEVEL	Midrange
A&B INT	CH 2
A SOURCE	INT
A EXT COUPLING	DC

PROCEDURE STEPS

1. Adjust Internal and External Trigger Offset (R309 and R387)

a. Set the Channel 1 trace and the Channel 2 trace to the center horizontal graticule line using the Channel 1 and Channel 2 POSITION controls.

b. Connect the digital voltmeter low lead to chassis ground and the high (volts) lead to TP460 (Alt Sweep Logic circuit board connector to the Main circuit board).

c. CHECK—The offset voltage reading is less than 80 mV. Note the reading for use in part e.

d. Set the A&B INT switch to CH 1.

e. ADJUST—Trigger Offset (R309) so that the voltage reading is the same as that obtained in part c.

f. Set the A&B INT switch to CH 2.

g. Repeat parts c through f until there is 1 mV or less difference in the voltmeter readings between the CH 1 and CH 2 positions of the A&B INT switch.

h. Set the A SOURCE switch to EXT.

i. ADJUST—Ext Trig Offset (R387) for the same voltage reading as in part g.

2. Adjust Trigger Sensitivity (R479 and R627)

a. Set:

VERTICAL MODE	CH 1
CH 1 VOLTS/DIV	0.1 V
Input Coupling (both)	AC
A SEC/DIV	10 μs
A SOURCE	INT

b. Connect the leveled sine-wave generator output via a 50-Ω cable and a 50-Ω termination to the CH 1 OR X input connector.

c. Set the generator to produce a 50-kHz, 2.6-division display.

d. Set the CH 1 VOLTS/DIV switch to 1 V.

e. ADJUST—A Trigger Sensitivity (R479) while rotating the A TRIGGER LEVEL control slowly so that the A Trigger is just able to be maintained.

f. Adjust the A TRIGGER LEVEL control for a stable display.

g. Set the HORIZONTAL MODE switch to B.

h. ADJUST—B Trigger Sensitivity (R627) while rotating the B TRIGGER LEVEL control slowly so that the B Trigger is just able to be maintained.

3. Adjust Slope Balance (R471)

a. Set:

CH 1 VOLTS/DIV	50 mV
HORIZONTAL MODE	A

b. Set the generator to produce a 4-division display.

c. ADJUST—Slope Bal (R471) for a downward vertical shift of 0.22 division at the start of the sweep when changing the A TRIGGER SLOPE switch between the OUT and IN positions.

4. Adjust P-P Auto Trigger Centering (R434 and R435)

a. Set:

A TRIGGER SLOPE	OUT
A TRIGGER LEVEL	Fully clockwise

b. Set the generator to produce a 50-kHz, 5-division display.

c. Set the CH 1 VOLTS/DIV switch to 0.5 V.

d. ADJUST—(+) Auto (R434) so that the vertical display just solidly triggers on the positive peak of the signal.

e. Set:

A TRIGGER SLOPE	IN
A TRIGGER LEVEL	Fully counterclockwise

f. ADJUST—(−) Auto (R435) so that the display just solidly triggers on the negative peak of the signal.

5. Check Internal Triggering

a. Set:

VOLTS/DIV (both)	50 mV
A SEC/DIV	0.1 μs

b. Select the FREQ function.

c. Connect the leveled sine-wave generator output via a 50-Ω cable and a 50-Ω termination to the CH 1 OR X input connector.

d. Set the generator to produce a 10-MHz, 3.5-division display.

e. Set the CH 1 VOLTS/DIV switch to 0.5 V.

f. CHECK—Stable display can be obtained by adjusting the A TRIGGER LEVEL control for each switch combination given in Table 5-6.

Table 5-6
Switch Combinations for A Triggering Checks

A TRIGGER Mode	A TRIGGER SLOPE
NORM	OUT
NORM	IN
P-P AUTO	IN
P-P AUTO	OUT

g. Set the HORIZONTAL MODE switch to B.

h. CHECK—Stable display can be obtained by adjusting the B TRIGGER LEVEL control in a position other than the B RUNS AFTER DLY position for both the OUT and IN positions of the B TRIGGER SLOPE switch.

i. Increase the generator output voltage to produce a 0.5-division display.

j. CHECK—The readout is stable and accurately displays the input signal frequency.

k. Set the HORIZONTAL MODE switch to A.

l. CHECK—The readout is stable and accurately displays the input signal frequency.

m. Set:

VERTICAL MODE	CH 2
A&B INT	CH 2

n. Move the cable from the CH 1 OR X input connector to the CH 2 OR Y input connector.

o. Repeat parts d through l for Channel 2.

p. Set the X10 Magnifier to On (knob out).

q. Set the generator to produce a 60-MHz, 1.2-division display.

r. Repeat parts f through h.

s. Increase the generator output to produce a 1.5-division display.

t. Repeat parts j through l.

u. Set:

VERTICAL MODE	CH 1
A&B INT	VERT MODE

v. Move the cable from the CH 2 OR Y input connector to the CH 1 OR X input connector.

w. Repeat parts q through t for Channel 1.

x. Set the A SEC/DIV switch to 0.05 μs.

y. Set the generator to produce a 100-MHz, 1.5-division display.

z. Repeat parts f through h.

aa. Increase the generator output to produce a 2.0-division display.

ab. Repeat parts j through l.

ac. Move the cable from the CH 1 OR X input connector to the CH 2 OR Y input connector. Set the VERTICAL MODE switch to CH 2.

ad. Repeat parts y through ab for Channel 2.

ae. Disconnect the test equipment from the instrument.

6. Check External Triggering

a. Set:

VERTICAL MODE	CH 1
X10 Magnifier	Off (knob in)
A SOURCE	EXT

b. Connect a 40-mV, 10-MHz leveled sine-wave signal via a 50-Ω cable and a 50-Ω termination to the EXT INPUT connector.

c. Push in and hold the TRIG VIEW button.

d. CHECK—Stable display can be obtained by adjusting the A TRIGGER LEVEL control for each switch combination given in Table 5-6. Then release the TRIG VIEW button.

e. Increase the generator output voltage to 50 mV.

f. CHECK—The readout is stable and accurately displays the input signal frequency.

g. Set the generator output voltage to 150 mV and the frequency to 60 MHz. Set the X10 Magnifier to On (knob out).

h. Repeat parts c and d.

i. Increase the generator output voltage to 160 mV.

j. CHECK—The readout is stable and accurately displays the input signal frequency.

k. Set the generator output voltage to 250 mV and the frequency to 100 MHz.

l. Repeat parts c and d.

m. Increase the generator output voltage to 300 mV.

n. CHECK—The readout is stable and accurately displays the input signal frequency.

o. Disconnect the test equipment from the instrument.

7. Check External Trigger Ranges

a. Set:

A SEC/DIV	20 μs
X10 Magnifier	Off (knob in)
A TRIGGER SLOPE	OUT
A TRIGGER Mode	NORM

b. Connect the leveled sine-wave generator output via a 50-Ω cable, a 50-Ω termination, and a dual-input coupler to the CH 1 OR X and EXT INPUT connectors.

c. Set the generator to produce a 50-kHz, 6.4-division display.

d. CHECK—Display is triggered along the entire positive slope of the waveform as the A TRIGGER LEVEL control is rotated.

e. CHECK—Display is not triggered (no trace) at either extreme of rotation.

f. Set the A TRIGGER SLOPE button to IN.

g. CHECK—Display is triggered along the entire negative slope of the waveform as the A TRIGGER LEVEL control is rotated.

h. CHECK—Display is not triggered (no trace) at either extreme of rotation.

8. Check Single Sweep Operation

a. Set the A SOURCE switch to INT.

b. Adjust the A TRIGGER LEVEL control to obtain a stable display.

c. Set the Channel 1 Input Coupling switch to GND.

d. Press in the SGL SWP button. The READY LED should illuminate and remain on.

e. Set the Channel 1 Input Coupling switch to DC.

f. CHECK—READY LED goes out and a single sweep occurs.

NOTE

The A INTENSITY control may require adjustment to observe the single-sweep trace.

g. Press in the SGL SWP button several times.

h. CHECK—Single-sweep trace occurs, and the READY LED illuminates briefly every time the SGL SWP button is pressed in and released.

i. Disconnect the test equipment from the instrument.

CTM

Equipment Required (see Table 4-1):

Pulse Generator (Item 4)	Resistor (Item 17)
Dc and Ohms Calibrator (Item 5)	Resistor (Item 18)
Ac Calibration System (Item 6)	Resistor (Item 19)
WWV Receiver (Item 7)	Two Adapters (Item 20)
50-Ω BNC Cable (Item 8)	Normalizer (Item 21)
50-Ω Termination (Item 9)	Screwdriver (Item 25)
Adapter (Item 13)	Low-Capacitance Alignment Tool (Item 26)
Patch Cord (Item 14)	DMM Test Leads (provided with instrument)
Adapter (Item 15)	10X Probe (provided with instrument)
Adapter (Item 16)	

See **ADJUSTMENT LOCATIONS 1,** **ADJUSTMENT LOCATIONS 3,** *and* **ADJUSTMENT LOCATIONS 4** *at the back of the manual for test point and adjustment locations.*

INITIAL CONTROL SETTINGS

Vertical

CH 1 POSITION	Midrange
VERTICAL MODE	CH 1
CH 1 VOLTS/DIV	0.5 V
CH 1 VOLTS/DIV Variable	CAL detent
Channel 1 Input Coupling	DCV

Horizontal

POSITION	Midrange
HORIZONTAL MODE	A
A SEC/DIV	0.5 μs
B SEC/DIV	0.05 μs
SEC/DIV Variable	CAL detent
X10 Magnifier	Off (knob in)
B DELAY TIME POSITION	Fully counterclockwise

B TRIGGER

SLOPE	OUT
LEVEL	Midrange

A TRIGGER

VAR HOLDOFF	NORM
Mode	P-P AUTO
SLOPE	OUT
LEVEL	Midrange
A&B INT	VERT MODE
A SOURCE	INT

PROCEDURE STEPS

1. Adjust Oscillator Frequency (C1311 or TCXO Adjustment)

a. Select the PER function.

b. Connect the WWV 1-MHz source via a 50-Ω cable to the CH 1 OR X & DMM input connector.

c. If the instrument has the TCXO option, skip to part h.

d. ADJUST—Osc Cal (C1311) for a reading of 1.00000 μs using the low-capacitance adjustment tool.

e. Select the FREQ function.

f. ADJUST—Osc Cal (C1311) for a reading between 999.9991 kHz and 999.9999 kHz.

g. Skip to Step 2 of this procedure.

h. ADJUST—Tcxo Cal located on U1304 for a reading of 1.00000 μs using the low-capacitance alignment tool.

i. Select the FREQ function.

j. ADJUST—Tcxo Cal for a reading of 999.9999 kHz. Then slowly change the adjustment setting until the display changes to 1.000000 MHz.

2. Check Period

a. Set the HORIZONTAL MODE switch to ALT and select the PER function.

b. Set the B TRIGGER LEVEL control to the center of its stable trigger range.

c. CHECK—Reading is between .99800 μs and 1.00200

d. Disconnect the test equipment from the instrument.

3. Check Width

a. Set:

HORIZONTAL MODE	A
A TRIGGER Mode	NORM

b. Select the WIDTH function.

c. Connect the pulse generator via a 50-Ω cable and a 50-Ω termination to the CH 1 OR X & DMM input connector.

d. Set the generator to produce a frequency of 10 MHz with a 50-ns wide pulse. Set the generator output to produce a 4-division display.

e. Set first the A TRIGGER LEVEL control and then the B TRIGGER LEVEL control to the center of their respective stable-trigger ranges.

f. CHECK—Reading is between 37.50 ns and 62.50 ns.

g. Disconnect the test equipment from the instrument.

4. Adjust Delay Time (R646 and R652)

a. Select the DLY TIME function.

b. Set:

HORIZONTAL MODE	ALT
A and B SEC/DIV	0.1 ms
A TRIGGER Mode	P-P AUTO
A TRIGGER LEVEL	Midrange
B TRIGGER LEVEL	B RUNS AFTER DLY

c. Set the B DELAY TIME POSITION control fully counterclockwise.

d. ADJUST—Delay Start (R646) for a reading of 40 μs.

e. Rotate the B DELAY TIME POSITION control fully clockwise.

f. ADJUST—Delay End (R652) for a reading between 1.00 ms and 1.04 ms.

g. Repeat parts c through f until no further improvement is noted.

h. Set:

Channel 1 Input Coupling	GND
A and B SEC/DIV	0.2 ms
B DELAY TIME POSITION	Fully counterclockwise

i. Align the start of the A Sweep with the 1st vertical graticule line using the Horizontal POSITION control.

j. CHECK—Intensified portion of the trace starts within 0.5 division of the start of the sweep.

k. Rotate the B DELAY TIME POSITION control fully clockwise.

l. CHECK—Intensified portion of the trace is past the 11th vertical graticule line.

m. Set the A and B SEC/DIV switches to 0.5 μs.

n. Align the start of the A Sweep with the 1st vertical graticule line using the Horizontal POSITION control.

o. CHECK—Intensified portion of the trace is past the 11th vertical graticule line.

p. Rotate the B DELAY TIME POSITION control fully counterclockwise.

q. CHECK—Intensified portion of the trace starts within 1.1 divisions of the start of the sweep.

r. Connect the WWV 1-MHz source via a 50-Ω cable to the CH 1 OR X & DMM input connector.

s. Set:

Channel 1 Input Coupling	DC
B SEC/DIV	0.05 μs
A TRIGGER Mode	NORM

t. Set the A TRIGGER LEVEL control to the center of its stable-trigger range.

u. Set the B TRIGGER LEVEL control so that the B Sweep is triggered on the leading edge of the second displayed cycle and is at the center of its stable-trigger range.

v. CHECK—Reading is between .98000 μs and 1.02000 μs.

5. Check Delta Time

a. Set the B TRIGGER LEVEL control to B RUNS AFTER DLY.

b. Select the ΔTIME function.

c. Set the B DELAY TIME POSITION control so that the leading edge of the second displayed cycle is intensified.

d. Set the ΔTIME POSITION control so that the leading edge of the third displayed cycle is intensified and the two B displays are coincident.

e. CHECK—Reading is between .99990 μs and 1.00010 μs.

f. Set the B TRIGGER LEVEL control to the center of its stable trigger range.

g. CHECK—Reading is between .99949 μs and 1.00051 μs.

h. Disconnect the test equipment from the instrument.

6. Adjust Dc Volts Zero (R1817 and R1819)

a. Select the DCV function.

b. Preset the Input Bias potentiometer (R1819) fully counterclockwise.

c. Connect one DMM test lead to the − MULTIMETER INPUTS connector and short the tip to the + input.

d. ADJUST—Input Offset (R1817) for a reading of .0000 V.

e. Disconnect the DMM test lead from the instrument.

f. ADJUST—Input Bias (R1819) for a reading of .0000 V.

g. Repeat parts c through f until no further improvement is noted.

h. Disconnect the DMM test lead from the instrument.

7. Adjust Dc Volts Accuracy (R1919)

a. Connect the dc volts calibrator via a female-to-dual banana adapter, a 50-Ω cable, and a female-to-dual banana adapter to the MULTIMETER INPUTS connector.

b. Set the calibrator to produce a 400-mV output.

c. ADJUST—Dc Volts Cal (R1919) for a reading of .4000 V.

d. Reverse the connector input at the MULTIMETER INPUTS connector.

e. CHECK—The reading is between −.3999 and −.4001.

f. CHECK—The other DMM dc voltage ranges using the input levels shown in Table 5-7.

g. Disconnect the test equipment from the instrument.

Table 5-7
Dc Voltage Readout Check

Calibrator Dc Voltage (V)	Display Readout Limits (V)
4	3.997 to 4.003
−4	−3.997 to −4.003
40	39.97 to 40.03
−40	−39.97 to −40.03
400	399.7 to 400.3
−400	−399.7 to −400.3

8. Adjust Ac Volts Zero (R1908)

a. Select the AC RMSV function.

b. Preset potentiometer Ac Zero (R1908) fully clockwise.

c. Connect one DMM test lead to the − MULTIMETER INPUTS connector and short the tip to the + input.

d. ADJUST—Ac Zero (R1908) slowly counterclockwise until the last digit just flips to a zero and does not bobble back to a 1.

e. Disconnect the DMM test lead from the instrument.

9. Adjust Ac Volts Accuracy (R1904, R1967, R1966, and R1965)

a. Connect the ac volts calibrator via a female-to-dual banana adapter, a 50-Ω cable, and a female-to-dual banana adapter to the MULTIMETER INPUTS connector.

b. Set the calibrator to produce a 1-kHz, 400-mV output.

c. ADJUST—Ac Cal (R1904) for a reading of .4000 V.

d. Change the calibrator output voltage to 4 V.

e. ADJUST—5 V Comp (R1967) for a reading of 3.997 V.

f. Change the calibrator output voltage to 40 V.

g. ADJUST—50 V Comp (R1966) for a reading of 39.97 V.

h. Change the calibrator output voltage to 300 V.

i. ADJUST—350 V Comp (R1965) for a reading of 299.8 V.

j. CHECK—Reading is within the limits shown in Table 5-8 for each calibrator output voltage from 20 Hz to 20 kHz.

Table 5-8
Ac Voltage Readout Checks

Calibrator Ac Voltage (V)	Display Readout Limits (V)
0.4	.3980 to .4020
4	3.980 to 4.020
40	39.80 to 40.20
300	298.4 to 301.6

k. Disconnect the test equipment from the instrument.

10. Adjust Channel 1 Dc Volts (R1802 and R1922)

a. Select the CH 1 V function.

b. Set:

CH 1 VOLTS/DIV	50 mV
Channel 1 Input Coupling	GND

c. ADJUST—Ch 1 Volts Offset (R1802) for a reading of .0000 V.

d. Set the Channel 1 Input Coupling switch to DC.

e. CHECK—Reading is between −.0004 V and .0004 V.

f. While holding in the P-P Auto button, push the SGL SWP button once to enter the auto-reference mode.

g. Connect the dc volts calibrator via a female-to-dual banana adapter and a 50-Ω cable to the CH 1 OR X & DMM input connector.

h. Set the calibrator to produce a 400-mV output.

i. ADJUST—Ch 1 Volts Cal (R1922) for a reading of .4000 V.

j. Set the CH 1 VOLTS/DIV switch to 0.5 V.

k. Change the calibrator output voltage to 4 V.

l. CHECK—Reading is between 3.996 V and 4.004 V.

m. Set the CH 1 VOLTS/DIV switch to 5 V.

n. Change the calibrator output voltage to 40 V.

o. CHECK—Reading is between 39.96 V and 40.04 V.

p. Disconnect the test equipment from the instrument.

q. Connect the dc volts calibrator via a female-to-dual banana adapter, a probe tip-to-bnc adapter, and the 10X probe to the CH 1 OR X & DMM input connector.

r. CHECK—Reading is within the limits shown in Table 5-9 for each CH 1 VOLTS/DIV switch setting and calibrator voltage combination.

Table 5-9
Dc Probe Readout Checks

CH 1 VOLTS/DIV Switch Switch	Calibrator Dc Voltage (V)	Display Readout Limits (V)
50 mV	4	3.986 to 4.014
0.5 V	40	39.86 to 40.14
5 V	400	398.6 to 401.4

s. Hit the SGL SWP button once to get out of the auto-reference mode.

t. Disconnect the test equipment from the instrument.

11. Adjust Channel 1 Ac Volts

a. Set:

CH 1 VOLTS/DIV	50 mV
Channel 1 Input Coupling	AC RMSV
A TRIGGER Mode	P-P AUTO

b. Connect the ac volts calibrator via a female-to-dual banana adapter and a 50-Ω cable to the CH 1 OR X & DMM input connector.

c. Set the calibrator to produce a 20-kHz, 400-mV output.

d. CHECK—Reading is between .3990 V and .4010 V. If the reading is within this range, skip to part f.

e. ADJUST—Ch 1 MF/LF Comp (C3) for a reading of .4000 V.

f. Set the CH 1 VOLTS/DIV switch to 0.5 V.

g. Change the calibrator output voltage to 4 V.

h. CHECK—Reading is between 3.990 V and 4.010 V. If the reading is within this range, skip to part j.

i. ADJUST—Ch 1 10X LF Comp (C12) for a reading of 4.000 V.

j. Set the CH 1 VOLTS/DIV switch to 5 V.

k. Change the calibrator output voltage to 40 V.

l. CHECK—Reading is between 39.90 V and 40.10 V.

m. Disconnect the test equipment from the instrument.

n. Connect the ac volts calibrator via a female-to-dual banana adapter, a probe-tip-to-bnc adapter, and a 10X probe to the CH 1 OR X & DMM input.

o. Set the CH 1 VOLTS/DIV switch to 50 mV.

p. Change the calibrator output voltage to 4 V.

q. ADJUST—The probe compensation (see the" Operating Instructions" section of this manual) for a reading of 4.000 V.

r. CHECK—Reading is within the limits shown in Table 5-10 for each CH 1 VOLTS/DIV switch setting and calibrator voltage combination at 20 kHz.

Table 5-10
Ac Probe Readout Checks

CH 1 VOLTS/DIV Switch Setting	Calibrator Ac Voltage (V)	Display Readout Limits (V)
0.5 V	40	39.76 to 40.24
5 V	300	298.2 to 301.8

s. Disconnect the test equipment from the instrument.

12. Adjust Beeper Volume (R1832)

a. Select the Continuity function by pushing in the AC RMSV and TEMP buttons simultaneously.

b. Connect one DMM test lead to the instrument and short the tip to the other DMM input.

c. ADJUST—Volume (R1832) fully clockwise for full volume.

d. Disconnect the test lead from the instrument.

13. Check Ohms

a. Select the Ω function.

b. Connect one DMM test lead to the instrument and short the tip to the other DMM input.

c. CHECK—Reading is less than .20 Ω.

d. Disconnect the DMM test lead from the instrument.

e. Connect the ohms calibrator via a female-to-dual banana adapter, a 50-Ω cable, and a female-to-dual banana adapter to the MULTIMETER INPUTS connector.

NOTE

The connection resistance must be less than 200 mΩ. Compensate for any measurement error in the 10- and 100-Ω checks by noting the reading obtained when the calibrator output is shorted and adjust the readings accordingly. Alternately, use the 4-wire sensing capability of the calibrator to eliminate measurement error.

f. CHECK—Reading is within the limits shown in Table 5-11 for each calibrator output resistance.

Table 5-11
Resistance Readout Checks

Calibrator Resistance (Ω)	Display Readout Limits (Ω)
10	9.77 to 10.23
100	99.6 to 100.4
1 k	.996 k to 1.004 k
10 k	9.96 k to 10.04 k
100 k	99.6 k to 100.4 k
1 M	.996 M to 1.004 M
10 M	9.96 M to 10.04 M

g. Disconnect the test equipment from the instrument.

NOTE

The next two checks use two high-resistance precision resistors. To preserve the accuracy of these resistors, store them in a clean, dry environment and do not allow finger contact or other forms of contamination on the resistor body. If contamination is suspected, wash the resistor body with isopropyl alcohol and air dry. If exposed to excessive humidity, bake the resistors at 200° F for 4 hours.

h. Connect the DMM test leads to the instrument; then connect the 150 MΩ precision resistor to the test leads.

i. CHECK—Reading is between 148.4 MΩ and 151.6 MΩ.

j. Disconnect the 150 MΩ resistor and connect the 1.5 GΩ precision resistor to the test leads.

k. CHECK—Reading is between 1.34 GΩ and 1.66 GΩ.

l. Disconnect the test equipment from the instrument.

14. Check Diode Forward Drop

a. Select UPPER FUNCTIONS and push in the FREQ, PER, and WIDTH buttons simultaneously to enter the self-test mode.

b. Push and release the SGL SWP button until S6 is displayed.

c. Select the DCV function.

d. Set the Channel 1 Input Coupling switch to GND.

e. Connect the dc volts calibrator via a female-to-dual banana adapter, a 50-Ω cable, and a female-to-dual banana adapter to the MULTIMETER INPUTS connector.

f. Set the calibrator to produce a 2.5-V output.

g. CHECK—Reading is Fd 2.474 V to 2.526 V.

h. Disconnect the test equipment from the instrument.

15. Check Temperature

a. Set the Channel 1 Input Coupling switch to AC RMSV and push the SGL SWP button once.

b. Select the TEMP function.

c. Connect the ohms calibrator via a female-to-dual banana adapter, a 50-Ω cable, and a female-to-dual banana adapter to the MULTIMETER INPUTS connector.

d. Set the calibrator to produce a 100-Ω output resistance.

e. CHECK—Reading is between −1.5°C and 1.5°C.

16. Check Normal Mode Rejection

a. Select the DCV function.

b. Set the calibrator to produce a 50-Hz, 10-V output.

c. CHECK—Reading is between −.0316 V and .0316 V.

17. Check Common Mode Rejection

a. Connect the test setup as shown in Figure 4-1.

b. Select the AC RMSV function.

c. Set the ac volts calibrator to produce a 60-Hz, 3.5-V output.

d. CHECK—Reading is between −.0035 V and .0035 V.

e. Disconnect the test equipment from the instrument.

MAINTENANCE

This section of the manual contains information for conducting preventive maintenance, troubleshooting, and corrective maintenance on the 2236 Oscilloscope.

STATIC-SENSITIVE COMPONENTS

The following precautions are applicable when performing any maintenance involving internal access to the instrument.

CAUTION

Static discharge can damage any semiconductor component in this instrument.

This instrument contains electrical components that are susceptible to damage from static discharge. Table 6-1 lists the relative susceptibility of various classes of semiconductors. Static voltages of 1 kV to 30 kV are common in unprotected environments.

When performing maintenance observe the following precautions to avoid component damage:

1. Minimize handling of static-sensitive components.

2. Transport and store static-sensitive components or assemblies in their original containers or on a metal rail. Label any package that contains static-sensitive components or assemblies.

3. Discharge the static voltage from your body by wearing a grounded antistatic wrist strap while handling these components. Servicing static-sensitive components or assemblies should be performed only at a static-free work station by qualified service personnel.

4. Nothing capable of generating or holding a static charge should be allowed on the work station surface.

5. Keep the component leads shorted together whenever possible.

6. Pick up components by their bodies, never by their leads.

Table 6-1
SUSCEPTIBILITY TO STATIC DISCHARGE DAMAGE

Semiconductor Classes	Relative Susceptibility Levels[a]
MOS or CMOS microcircuits or discretes, or linear microcircuits with MOS inputs. (Most Sensitive)	1
ECL	2
Schottky signal diodes	3
Schottky TTL	4
High-frequency bipolar transistors	5
JFETs	6
Linear microcircuits	7
Low-power Schottky TTL	8
TTL (Least Sensitive)	9

[a]Voltage equivalent for levels: (Voltage discharged from a 100 pF capacitor through a resistance of 100 Ω.)

1 = 100 to 500 V 4 = 500 V 7 = 400 to 1000 V(est.)
2 = 200 to 500 V 5 = 400 to 600 V 8 = 900 V
3 = 250 V 6 = 600 to 800 V 9 = 1200 V

7. Do not slide the components over any surface.

8. Avoid handling components in areas that have a floor or work-surface covering capable of generating a static charge.

9. Use a soldering iron that is connected to earth ground.

10. Use only approved antistatic, vacuum-type desoldering tools for component removal.

PREVENTIVE MAINTENANCE

INTRODUCTION

Preventive maintenance consists of cleaning, visual inspection, lubrication, and checking instrument performance. When accomplished regularly, it may prevent instrument malfunction and enhance instrument reliability. The severity of the environment in which the instrument is used determines the required frequency of maintenance. An appropriate time to accomplish preventive maintenance is just before instrument adjustment.

GENERAL CARE

The cabinet minimizes accumulation of dust inside the instrument and should normally be in place when operating the oscilloscope. The optional front-panel cover provides both dust and damage protection for the front panel and crt face, and it should be in place whenever the instrument is stored or is being transported.

INSPECTION AND CLEANING

The instrument should be visually inspected and cleaned as often as operating conditions require. Accumulation of dirt in the instrument can cause overheating and component breakdown. Dirt on components acts as an insulating blanket, preventing efficient heat dissipation. It also provides an electrical conduction path that could result in instrument failure, especially under high-humidity conditions.

CAUTION

Avoid the use of chemical cleaning agents which might damage the plastics used in this instrument. Use a nonresidue-type cleaner, preferably isopropyl alcohol, denatured ethyl alcohol, or a solution of 5% mild detergent with 95% water. Before using any other type of cleaner, consult your Tektronix Service Center or representative.

Exterior

INSPECTION. Inspect the external portion of the instrument for damage, wear, and missing parts; use Table 6-2 as a guide. Instruments that appear to have been dropped or otherwise abused should be checked thoroughly to verify correct operation and performance. Deficiencies found that could cause personal injury or could lead to further damage to the instrument should be repaired immediately.

CAUTION

To prevent getting moisture inside the instrument during external cleaning, use only enough liquid to dampen the cloth or applicator.

CLEANING. Loose dust on the outside of the instrument can be removed with a soft cloth or small soft-bristle brush. The brush is particularly useful for dislodging dirt on and around the controls and connectors. Dirt that remains can be removed with a soft cloth dampened in a mild detergent-and-water solution. Do not use abrasive cleaners. Clean the light filter and the crt face with a soft lint-free cloth dampened with either denatured alcohol or a mild detergent-and-water solution.

Interior

To gain access to internal portions of the instrument for inspection and cleaning, refer to the "Removal and Replacement Instructions" in the "Corrective Maintenance" part of this section.

INSPECTION. Inspect the internal portions of the instrument for damage and wear, using Table 6-3 as a guide. Deficiencies found should be repaired immediately. The corrective procedure for most visible defects is obvious; however, particular care must be taken if heat-damaged components are found. Overheating usually indicates other trouble in the instrument; therefore, it is important that the cause of overheating be corrected to prevent recurrence of the damage.

Table 6-2
External Inspection Checklist

Item	Inspect For	Repair Action
Cabinet and Front Panel	Cracks, scratches, deformations, and damaged hardware or gaskets.	Touch up paint and replace defective parts.
Front-panel Controls	Missing, damaged, or loose knobs, buttons, and controls.	Repair or replace missing or defective items.
Carrying Handle	Correct operation.	Replace defective parts.
Accessories	Missing items or parts of items, bent pins, broken or frayed cables, and damaged connectors.	Replace damaged or missing items, frayed cables, and defective parts.

Table 6-3
Internal Inspection Checklist

Item	Inspect For	Repair Action
Circuit Boards	Loose, broken, or corroded solder connections. Burned circuit boards. Burned, broken, or cracked circuit-run plating.	Clean solder corrosion with an eraser and flush with isopropyl alcohol. Resolder defective connections. Determine cause of burned items and repair. Repair defective circuit runs.
Resistors	Burned, cracked, broken, or blistered.	Replace defective resistors. Check for cause of burned component and repair as necessary.
Solder Connections	Cold solder or rosin joints.	Resolder joint and clean with isopropyl alcohol.
Capacitors	Damaged or leaking cases. Corroded solder on leads or terminals.	Replace defective capacitors. Clean solder connections and flush with isopropyl alcohol.
Wiring and Cables	Loose plugs or connectors. Burned, broken, or frayed wiring.	Firmly seat connectors. Repair or replace defective wires or cables.
Chassis	Dents, deformations, and damaged hardware.	Straighten, repair, or replace defective hardware.

If any electrical component is replaced, conduct a Performance Check of the affected circuit and of other closely related circuits (see Section 4). If repair or replacement work is done on any of the power supplies, conduct a complete Performance Check and, if so indicated, an instrument readjustment (see Section 5).

CAUTION

To prevent damage from electrical arcing, ensure that circuit boards and components are dry before applying power to the instrument.

CLEANING OSCILLOSCOPE CIRCUIT BOARDS. To clean the interior, blow off dust with dry, low-pressure air (approximately 9 psi). Remove any remaining dust with a soft brush or a cloth dampened with a solution of mild detergent and water. A cotton-tipped applicator is useful for cleaning in narrow spaces and on circuit boards.

If these methods do not remove all the dust or dirt, the instrument may be spray washed using a solution of 5% mild detergent and 95% water as follows:

1. Gain access to the parts to be cleaned (see "Removal and Replacement Instructions").

2. Spray wash dirty parts with the detergent-and-water solution; then use clean water to thoroughly rinse them.

3. Dry all parts with low-pressure air.

SWITCH CONTACTS. The VOLTS/DIV and the SEC/DIV switches are mounted on circuit boards within the instrument. Care must be exercised to preserve the high-frequency characteristics of these switches. Switch maintenance is seldom necessary, but if it is required, observe the following precautions.

1. The VOLTS/DIV switches contain cam-actuated contacts.

CAUTION

Most spray-type circuit coolants contain Freon 12 as a propellant. Because many Freons adversely affect switch contacts, do not use a spray-type coolant.

The recommended circuit coolants for the volts/division attenuators are dry ice (CO2) and isopropyl alcohol.

a. Use isopropyl alcohol as a cleaning solution, especially in the area of the vertical Attenuator circuit board and the CTM circuit board.

b. Apply the alcohol with a small, camel-hair brush. Do not use cotton-tipped applicators when cleaning contacts.

2. The SEC/DIV switch is comprised of rotary-activated contacts.

CAUTION

Use hot deionized or distilled water, 55° C (131° F), to clean the timing switch in this instrument. Tap water contains impurities which are left as residuals after evaporation.

a. Spray hot water into the slots at the top of each switch housing while rotating the switch control knob. Spray each switch for approximately five seconds, using an atomizing spray device.

b. Dry both the switch and the circuit board on which it is mounted, using dry low-pressure air.

c. Bake the switch and the circuit board in an oven at 75°C (167°F) for 15 minutes to eliminate all moisture.

d. Spray a very small amount (only about a 1/2-second squirt) of a recommended lubricant, such as No Noise, into the slots at the top of the switch housing.

e. Rotate the switch control knob about 180° and again spray a very small amount of lubricant into each slot.

CLEANING CTM CIRCUIT BOARDS. The CTM circuit board assembly must be repaired and handled very carefully to prevent skin-oil contamination. Also, to preserve CTM accuracy and stability, remove all solder residue using the following procedure.

1. Gain access to the parts to be cleaned (see "Removal and Replacement Instructions").

CAUTION

Before washing the CTM board assembly, unsolder and remove ΔTIME POSITION control from the board. This will prevent contamination of the ΔTIME POSITION control.

2. Wash the CTM circuit board assembly in a solution of 5% mild detergent and 95% water.

3. Rinse the CTM board assembly by immersing it in clean, hot distilled or deionized water and then in isopropyl alcohol.

4. Allow the CTM board assembly to air dry.

LUBRICATION

Most of the potentiometers used in this instrument are permanently sealed and generally do not require periodic lubrication. All switches, both rotary- and lever-type, are installed with proper lubrication applied where necessary and will rarely require any additional lubrication. Therefore, a regular periodic lubrication program for the instrument is not recommended.

SEMICONDUCTOR CHECKS

Periodic checks of the transistors and other semiconductors in the oscilloscope are not recommended. The best check of semiconductor performance is actual operation in the instrument.

PERIODIC READJUSTMENT

To ensure accurate measurements, check the performance of this instrument after every 2000 hours of operation, or if used infrequently, once each year. In addition, replacement of components may necessitate readjustment of the affected circuits.

Complete Performance Check and Adjustment instructions are given in Section 4 and 5. The Performance Check Procedure can also be helpful in localizing certain trouble in the instrument. In some cases, minor problems may be revealed or corrected by readjustment. If only a partial adjustment is performed, see the interaction chart, Table 5-1, for possible adjustment interactions with other circuits.

TROUBLESHOOTING

INTRODUCTION

Preventive maintenance performed on a regular basis should reveal most potential problems before an instrument malfunctions. However, should troubleshooting be required, the following information is provided to facilitate location of a fault. In addition, the material presented in the "Theory of Operation" and the "Diagrams" sections of this manual may be helpful while troubleshooting.

TROUBLESHOOTING AIDS

Schematic Diagrams

Complete schematic diagrams are located on tabbed foldout pages in the "Diagrams" section. The portions of circuitry that are mounted on each circuit board are enclosed within heavy black lines. Also within the black lines, near either the top or the bottom edge, are the assembly number and name of the circuit board.

Component numbers and electrical values of components in this instrument are shown on the schematic diagrams. Refer to the first page of the "Diagrams" section for definitions of the reference designators and symbols used to identify components.

Circuit Board Illustrations

Circuit board illustrations (showing the physical location of each component) are provided for use in conjunction with each schematic diagram. Each board illustration can be found on the back side of a foldout page, preceding the schematic diagram(s) to which it relates. If more than one schematic diagram is associated with a particular circuit board, the board illustration is located on a left-hand page preceding the diagram with which the board is first associated.

Also provided in the "Diagrams" section is an illustration of the bottom side of the Main circuit board. This drawing facilitates troubleshooting by showing the connection pads and the location of components that are mounted on the top side of the board. Probing of Main board component signals that are inaccessible from the top side can be achieved without the necessity of disassembling portions of the instrument.

Waveform test-point locations are also identified on the circuit board illustration by hexagonal-outlined numbers that correspond to the waveform numbers appearing on both the schematic diagram and the waveform illustration.

Circuit Board Locations

An illustration depicting the location of a circuit board within the instrument is shown on the foldout page adjacent to the circuit board illustration.

Circuit Board Interconnection Diagram

A circuit board cable distribution diagram and connector-pin locator table is also provided in the "Diagrams" section to aid in tracing a signal path or power source between boards. All wires, plug and jack numbers are shown along with wire or pin numbers.

Power Distribution Diagram

A Power Distribution diagram (Diagram 14) is provided to aid in troubleshooting power-supply problems. This diagram shows service jumpers used to remove power from the various circuit boards. Excessive loading on a power supply by a circuit board can be isolated to the faulty board by disconnecting appropriate service jumpers.

Grid Coordinate System

Each schematic diagram and circuit board illustration has a grid border along its left and top edges. A table located adjacent to each schematic diagram lists the grid coordinates of each component shown on that schematic. To aid in physically locating a component on the respective circuit board, this table also lists the circuit-board grid coordinate of each component.

Adjacent to each circuit board illustration is an alphanumeric listing of every component mounted on that board. A second column in this listing identifies the schematic diagram in which each component can be found. These component-locator tables are especially useful when more than one schematic diagram is associated with a particular circuit board.

Oscilloscope Troubleshooting Charts

The troubleshooting charts contained in the "Diagrams" section are to be used as an aid in locating malfunctioning circuitry. To use the charts, begin with the Troubleshooting Guide. This chart will help identify a particular problem area for further troubleshooting.

Note that some troubleshooting-procedure boxes on each chart contain numbers along their lower edges. These numbers identify the applicable schematic diagram(s) to be used when performing the action specified in the box.

Both General and Specific notes may be called out in the troubleshooting-chart boxes. These notes are located on the inner panels of the foldout pages. Specific Notes contain procedures or additional information to be used in performing the particular troubleshooting step called for in that box. General Notes contain information that pertains to the overall troubleshooting procedure.

Some malfunctions, especially those involving multiple simultaneous failures, may require more elaborate troubleshooting approaches with references to circuit descriptions in the "Theory or Operation" section of this manual.

Component Color Coding

Information regarding color codes and markings of resistors and capacitors is located in the color-coding illustration (Figure 9-1) at the beginning of the "Diagrams" section.

RESISTOR COLOR CODE. Resistors used in this instrument are carbon-film, composition, or precision metal-film types. They are color coded with the EIA color code; however, some metal-film resistors may have the value printed on the body. The color code is interpreted by starting with the stripe that is nearest to one end of the resistor.Composition resistors have four stripes; these represent two significant figures, a multiplier, and a tolerance value. Metal-film resistors have five stripes which represent three significant figures, a multiplier, and a tolerance value.

CAPACITOR MARKINGS. Capacitance values of common disc capacitors and small electrolytics are marked on the side of the capacitor body. White ceramic capacitors are color coded in picofarads, using a modified EIA code.

Dipped tantalum capacitors are color coded in microfarads. The color dot indicates both the positive lead and the voltage rating. Since these capacitors are easily destroyed by reversed or excessive voltage, be careful to observe the polarity and voltage rating.

DIODE COLOR CODE. The cathode end of each glass-encased diode is indicated by either a stripe, a series of stripes, or a dot. For most silicon or germanium diodes marked with a series of stripes, the color combination of the stripes identifies three digits of the Tektronix Part Number, using the resistor color-code system (e.g., a diode having either a pink or a blue stripe at the cathode end, then a brown-gray-green stripe combination, indicates Tektronix Part Number 152-0185-00). The cathode and anode ends of a metal-encased diode can be identified by the diode symbol marked on its body.

Semiconductor Lead Configurations

Figure 9-2 in the "Diagrams" section shows the lead configurations for semiconductor devices used in the instrument. These lead configurations and case styles are typical of those available at completion of the design of the instrument. Vendor changes and performance improvement changes may result in changes of case styles or lead configurations. If the device in question does not appear to match the configuration in Figure 9-2, examine the associated circuitry or consult a semiconductor manufacturer's data sheet.

Multipin Connectors

Multipin connector orientation is indicated by two triangles: one on the holder and one on the circuit board. Slot numbers are usually molded into the holder. When a connection is made to circuit-board pins, ensure that the triangle on the holder and the triangle on the circuit board are aligned with each other (see Figure 6-1).

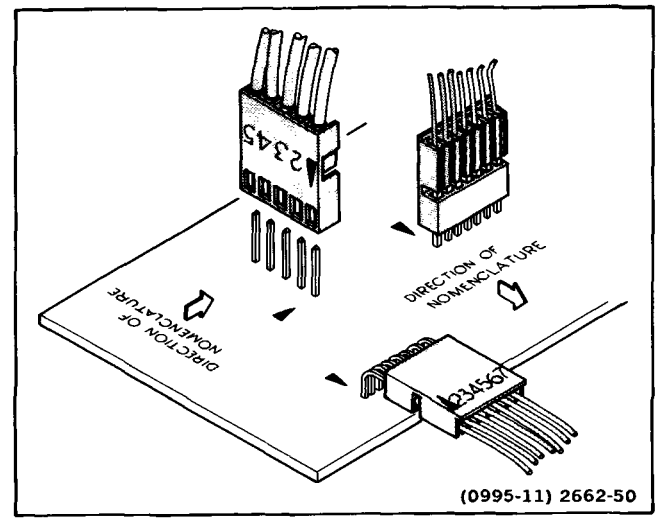

Fig. 6-1. Multi-connector holder orientation.

TROUBLESHOOTING EQUIPMENT

The equipment listed in Table 4-1, or equivalent equipment, may be useful when troubleshooting this instrument.

TROUBLESHOOTING TECHNIQUES

The following procedure is arranged in an order that enables checking simple trouble possibilities before requiring more extensive troubleshooting. The first four checks ensure proper control settings, connections, operation, and adjustment. If the trouble is not located by these checks, the remaining steps will aid in locating the defective component. When the defective component is located, replace it, using the appropriate replacement procedure given under "Corrective Maintenance" in this section.

CAUTION

Before using any test equipment to make measurements on static-sensitive, current-sensitive, or voltage-sensitive components or assemblies, ensure that any voltage or current supplied by the test equipment does not exceed the limits of the component to be tested.

1. Check Control Settings

Incorrect control settings can give a false indication of instrument malfunction. If there is any question about the correct function or operation of any control, refer to either the "Operating Instructions" (Section 2) in this manual or to the instrument Operators Manual.

2. Check Associated Equipment

Before proceeding, ensure that any equipment used with this instrument is operating correctly. Verify that input signals are properly connected and that the interconnecting cables are not defective. Check the power-input-source voltages.

WARNING

To avoid electrical shock, disconnect the instrument from the power-input source before performing visual inspection.

3. Visual Check

Perform a visual inspection. This check may reveal broken connections or wires, damaged components, semiconductors not firmly mounted, damaged circuit boards, or other clues.

WARNING

Dangerous potentials exist at several points throughout this instrument. If it is operated with the cabinet removed, do not touch exposed connections or components.

4. Check Instrument Performance and Adjustment

Check the performance of either those circuits where trouble appears to exist or the entire instrument. The apparent trouble may only be the result of misadjustment. Com-

plete performance check and adjustment instructions are given in Sections 4 and 5 of this manual.

5. Isolate Trouble to a Circuit

To isolate problems to a particular area, use the trouble symptom to help identify the circuit in which the trouble is located. To detect malfunction in the oscilloscope section, refer to the troubleshooting charts in the "Diagrams" section as an aid in locating a faulty circuit.

The 2236 performs automatic verification for much of the CTM circuitry when power is applied. If the power-up checks fail, the area of failure can be identified by the error message on the readout. Exercising the diagnostic routine can also identify the CTM circuit in which trouble is located with an error message. Refer to the "CTM Troubleshooting Procedure" in this section for definitions of error messages. If the readout is blank or has garbage on it, proceed to the "Kernel and Display System" in the" CTM Troubleshooting Procedure" in this section.

Before troubleshooting the CTM, ensure that the oscilloscope section is working properly.

6. Check Power Supplies

WARNING

For safety reasons an isolation transformer must be connected whenever troubleshooting is done in the Preregulator and the Inverter Power Supply sections.

Check the power supplies whenever trouble symptoms appear in more than one circuit. The correct output voltage and ripple for each supply should be measured between the supply test point and chassis ground test point (see Table 6-4). Voltages may be measured with a DMM, while the ripple measurements are accomplished with an oscilloscope. Before checking power-supply circuitry set the A INTENSITY control to minimum brightness and the A SEC/DIV switch to X-Y mode.

When measuring ripple, use a 1X probe with a bayonet signal tip attached to the probe tip to minimize stray pickup. Touch the bayonet signal tip to the first test point indicated in Table 6-4 and touch the bayonet ground tip to the chassis ground test point. The ripple values listed in Table 6-4 are based on a system limited in bandwidth to 30 kHz (greater bandwidth will result in higher readings).

If power supply voltages and ripple are within the listed ranges, the supply can be assumed to be operating correctly. If any are outside these ranges, the supply may be either misadjusted or operating incorrectly. Use the "Power Supply and CRT Display" section in the "Adjustment Procedure" to adjust the −8.6 V supply.

A defective component elsewhere in the instrument can create the appearance of a power-supply problem and may also affect the operation of other circuits.

Table 6-4
Power Supply Limits and Ripple

Power Supply	Test Point	Reading (Volts)	P-P Ripple (mV)
−8.6 V	TP961	−8.56 to −8.64	5
+5.2 V	W968	+5.04 to +5.36	5
+8.6 V	W960	+8.43 to +8.77	5
+30 V	W956	+29.1 to +30.9	30
+100 V	W954	+97.0 to +103.0	50

7. Check Circuit Board Interconnections

After the trouble has been isolated to a particular circuit, again check for loose or broken connections and heat-damaged components.

8. Check Voltages and Waveforms

Often the defective component can be located by checking the appropriate voltage or waveform in the circuit. Typical voltages are listed on the schematic diagrams. Waveforms are shown adjacent to the schematics, and waveform test points are indicated on both the schematics and circuit board illustrations by hexagonal-outlined numbers.

NOTE

Voltages and waveforms given on the schematic diagrams are not absolute and may vary slightly between instruments. To establish operating conditions similar to those used to obtain these readings, see the "Voltage and Waveform Setup" conditions in the "Diagrams" section for the preliminary equipment setup. Note the recommended test equipment, initial front-panel control settings, and cable-connection instructions. The control-setting changes (from initial setup) required to obtain the given waveforms and voltages are located on the waveform-diagram page.

WARNING

To avoid electric shock, always disconnect the instrument from the power input source before removing or replacing components.

9. Check Individual Components

The following procedures describe methods of checking individual components. Two-lead components that are soldered in place are most accurately checked by first disconnecting one end from the circuit board. This isolates the measurement from the effects of surrounding circuitry. See Figure 9-1 for value identification or Figure 9-2 for typical semiconductor lead configuration.

CAUTION

When checking semiconductors, observe the static-sensitive precautions located at the beginning of this section.

TRANSISTORS. A good check of transistor operation is actual performance under operating conditions. A transistor can most effectively be checked by substituting a known good component. However, be sure that circuit conditions are not such that a replacement transistor might also be damaged. If substitute transistors are not available, use a dynamic tester. Static-type testers are not recommended, since they do not check operation under simulated operating conditions.

When troubleshooting transistors in the circuit with a voltmeter, measure both the emitter-to-base and emitter-to-collector voltages to determine whether they are consistent with normal circuit voltages. Voltages across a transistor may vary with the type of device and its circuit function.

Some of these voltage are predictable. The emitter-to-base voltage for a conducting silicon transistor will normally range from 0.6 to 0.8 V. The emitter-to-collector voltage for a saturated transistor is about 0.2 V. Because these values are small, the best way to check them is by connecting a sensitive voltmeter across the junction rather than comparing two voltages taken with respect to ground. If the former method is used, both leads of the voltmeter must be isolated from ground.

If values less than these are obtained, either the device is shorted or no current is flowing in the external circuit. If values exceed the emitter-to-base values given, either the junction is reverse biased or the device is defective. Voltages exceeding those given for typical emitter-to-collector values could indicate either a nonsaturated device operating normally or a defective (open-circuited) transistor. If the device is conducting, voltage will be developed across the resistors in series with it; if it is open, no voltage will be developed across the resistors in series with it, unless current is being supplied by a parallel path.

CAUTION

When checking emitter-to-base junctions, do not use an ohmmeter range that has either a high internal current or voltage. High current or high voltage can damage the transistor. Reverse biasing the emitter-to-base junction with a high current may degrade the transistor's current-transfer ratio (Beta).

A transistor emitter-to-base junction also can be checked for an open or shorted condition by measuring the resistance between terminals with an ohmmeter set to a range having a low internal source current, such as the R X 1 kΩ range. The junction resistance should be very high in one direction and very low when the meter leads are reversed.

When troubleshooting a field-effect transistor, the voltage across its elements can be checked in the same manner as previously described for other transistors. However, remember that in the normal depletion mode of operation, the gate-to-source junction is reverse biased; in the enhanced mode, the junction is forward biased.

INTEGRATED CIRCUITS. An integrated circuit (IC) can be checked with a voltmeter, test oscilloscope, or by direct substitution. A good understanding of circuit operation is essential to troubleshooting a circuit having an IC. Use care when checking voltages and waveforms around the IC so that adjacent leads are not shorted together. The grabber tip or an IC test clip provides a convenient means of clipping a test probe to an IC.

CAUTION

When checking a diode, do not use an ohmmeter range that has a high internal current. High current can damage the diode. Checks on diodes can be performed in much the same manner as on transistor emitter-to-base junctions; use a dynamic tester, such as the TEKTRONIX 576 Curve Tracer.

DIODES. A diode can be checked for either an open or a shorted condition by measuring the resistance between terminals with an ohmmeter set to a range having a low inter-

nal source current, such as the R X 1 kΩ range. The diode resistance should be very high in one direction and very low when the meter leads are reversed.

When conducting, silicon diodes should have 0.6 to 0.8 V across their junctions, and Schottky diodes should have 0.2 to 0.4 V across their junctions. Higher readings indicate that they are either reverse biased or defective, depending on polarity.

RESISTORS. Check resistors with an ohmmeter. Refer to the "Replaceable Electrical Parts" list for the tolerances of resistors used in this instrument. A resistor normally does not require replacement unless its measured value varies widely from its specified value and tolerance.

INDUCTORS. Check for open inductors by checking continuity with an ohmmeter. Shorted or partially shorted inductors can usually be found by checking the waveform response when high-frequency signals are passed through the circuit.

CAPACITORS. A leaky or shorted capacitor can best be detected by checking resistance with an ohmmeter set to one of the highest ranges. Do not exceed the voltage rating of the capacitor. The resistance reading should be high after the capacitor is charged to the output voltage of the ohmmeter. An open capacitor can be detected with a capacitance meter or by checking whether the capacitor passes ac signals.

10. Repair and Adjust the Circuit

If any defective parts are located, follow the replacement procedures given under "Corrective Maintenance" in this section. After any electrical component has been replaced, the performance for that particular circuit should be checked, as well as the performance of other closely related circuits. Since the power supplies affect all circuits, performance of the entire instrument should be checked if work has been done in any of the power supplies or if the power transformer has been replaced. Readjustment of the affected circuitry may be necessary. Refer to the "Performance Check Procedure" and "Adjustment Procedure" (Sections 4 and 5) and to Table 5-1 (Adjustment Interactions).

CTM TROUBLESHOOTING PROCEDURE

The following information is intended to aid in the diagnosis and repair of a malfunctioning CTM. The troubleshooting procedure consists of two parts: "Kernel and Display System" and "Power-UP Checks and Diagnostic Routines". Observe the following symptom on the readout to identify which procedure to use:

A blank or erroneous message on the readout will indicate a circuit failure in either the kernel or the display system. Proceed to the "Kernel and Display System" procedure to identify the problem.

The readout displays error message. This indicates that the kernel and display system are working correctly but the Power-Up Checks found a fault. Proceed to "Diagnostic Routines" for definitions of error messages on the readout.

Kernel and Display System

The CTM kernel consists of the 6802 microprocessor (CPU), CPU reset circuit, CPU clock and interrupt generator, CPU address decode logic, counter data (CD) bus switch, buffered data (BD) bus latch, and two ROMs. The entire kernel must be operating correctly before proceeding to the diagnostic routines. Unless there is an obvious display system problem (bad readout, disconnected cables etc.), it is assumed that the malfunction is in the kernel.

KERNEL CHECK. Ensure that both the microprocessor and ROMs are plugged in correctly before performing the following kernel troubleshooting checks.

1. Check that the voltage to the ICs in the kernel is 5 V ±5%.

2. Check the output of the CPU reset circuit for a HI at U1400 pin 40.

3. Check the CPU clock signal at U1400 pin 39 for a 2.5 MHz square wave.

4. Check the CPU interrupt generator signal at U1400 pin 4 for a negative-going pulse, approximately 31 us wide at approximately 600 Hz. If this signal is present, then the CPU and ROMs are working correctly. The problem may either be in the CPU address decode logic, the BD bus latch, or the display system. If the interrupt signal is a 305 Hz square wave, the firmware is not executing correctly; proceed to step 7 in this procedure.

5. Check address bus for shorts or opens by placing the microprocessor into a nop loop. This is accomplished by moving jumper P1404 from its Norm position to the Test position and removing P1402 from its pins. Attach a 40-pin IC test clip to the microprocessor. Connect IC test clip pins 26 through 32 to pin 21 of the IC test clip . This will force the

nop instruction into the microprocessor, causing all 16 of the address lines to toggle like a binary up-counter, with address line A0 toggling the fastest. In this mode, the address lines can be traced for shorts and opens and much of the address decoding logic can be checked. Manual stimulation can be used to provide a more in-depth checkout of the address lines.

6. Check buffered data (BD), counter data (CD), and ROM data (RD) bus lines for shorts and opens by removing the microprocessor and manually stimulating the data bus lines. Different sections of the data bus lines can be isolated by removing the BD bus latch (U1409) and opening each of the switch sections in the CD bus switch (S1400).

7. If the interrupt signal is a 305 Hz square-wave and the address and data busses appear to be good, suspect that one or both ROMs may be defective. The CPU (U1400) may be bad also, even though the nop loop worked correctly. Try substituting these parts.

DISPLAY SYSTEM CHECK. Start the Display check by examining the display driver outputs for a voltage swing between 0 and Vcc. Also check that the filament drive signal (F1 and F2) is a squarewave with minimum and maximum voltages of 1.5 and 4.2 respectively. If the correct voltages and signals are not present, check the 4-to-9 decoder, digit and segment latches, and filament driver. If the outputs of the digit and segment latches are stuck, the BD bus latch may be faulty.

Power-Up Checks and Diagnostic Routines

The 2236 CTM Power-Up Checks and Diagnostic Routines modes are used to facilitate the troubleshooting of the CTM circuitry. These checks and routines are used as starting points for tracing errors down to the component level.

POWER-UP CHECKS. The Power-Up Checks are performed each time the instrument is turned on. These checks consist of ROM check, Counter, and DMM respectively. Each of these checks must pass before proceeding to the next check. If a check fails, it is repeated until the fault is corrected or Power-Up Checks is aborted.

If the Power-Up Checks discover a fault, there are two ways to exit from the power-up checking loop: press in the SGL SWP RESET button momentarily while the error message is being displayed to start the Diagnostic Routine, or move the Channel 1 Input Coupling switch from AC to GND while the error message is being displayed to enter normal measurement mode. The descriptions of these checks are as follows:

ROM Check

The ROM check calculates the checksum for each of the two ROMs and compares these checksums against the checksum values stored in the ROMs themselves. If this check fails, the error message in the readout will be "FAIL-ro".

Counter Check

A firmware-derived test signal is used to drive the counter into predetermined states to verify basic functionality. If this check fails, the error message in the readout will be "FAIL-ctr".

DMM Check

Measurements of offsets and reference voltages are made inside the DMM hardware. If this check fails, the error message in the readout will be "FAIL-d".

DIAGNOSTIC ROUTINES. The Diagnostic Routines consist of checks, tests,and stimulus loops that the service personnel can individually select and execute. The checks and tests will display the test message on the readout, and stimulus loops provide test signals at various testpoints within the instrument.

The Diagnostic Routines can be selected from a normal measurement mode. When Diagnostic Routines are selected from normal measurement mode, the readout will display the message "SELF tESt". While this message is being displayed, normal measurement mode can be reentered by pressing in any of the CTM buttons. The Diagnostic Routines are started by pressing the SGL SWP RESET button once.

To advance and select a particular routine, the SGL SWP RESET button is pressed in momentarily as often as necessary until the proper routine is displayed on the readout. Once Diagnostic Routines starts, normal measurement mode cannot be reentered until the "End S-t" message is displayed on the readout. This test message indicates the end of the Diagnostic Routines; normal measurement mode may now be entered by pressing in any of the CTM buttons.

To select Diagnostic Routines in normal measurement mode, perform the following steps:

1. Set:

Channel 1 Input Coupling	AC
UPPER FUNCTIONS-LOWER FUNCTIONS	IN
Function Select	FREQ, PER, and WIDTH

2. The readout will display "SELF-tESt". The instrument is now ready to perform the Diagnostic Routine.

3. Press in the SGL SWP RESET button momentarily to enter the first Check Routine.

Check Routines. The Check Routines consist of three checks; one looks at the ROM headers and the others check the front-panel controls that are CTM related. The three Check Routines are called up in the following sequence.

Check 1-Software Version Readout

This check displays on the readout the software version and revision numbers which are stored in the headers of the 8K ROM and the 2K ROM.

The readout will display "A.ABB C.CDD" where "A.A and C.C" are the version numbers in the 8K ROM and 2K ROM headers respectively, and "BB and DD" are the respective revision numbers. The version and revision number of the 8K ROM should match the 2K ROM.

Check 2—Front Panel Control Verification

This check continuously monitors and displays the status of the Function Select switches and the HORIZONTAL MODE switch.

The readout will display "X YYYYYY" where "X" represents the HORIZONTAL MODE switch, and "Y" represents CTM Function Select switches in a left-to-right sequence. See Table 6-5 for the Front Panel Control Verification readout.

Table 6-5
Control Switches Verification Readout

Front Panel Controls	Display
"X" Horizontal Mode	
A	0
ALT or B	1
"Y" Function Select switches	
Out	0
In	1

Check 3—Channel 1 Logic Verification

This check continuously monitors and displays the status of the Channel 1 Input Coupling switch, Channel 1 probe, and CH 1 VOLTS/DIV switch.

The readout will display "CX PX AXX" where "C" represents the Channel 1 Input Coupling switch, "P" represents the probe, and "A" represents the CH 1 VOLTS/DIV switch (attenuator). The "X" represents the logic (1 or 0) of the Channel 1 Input Coupling switch, probe, and CH 1 VOLTS/DIV switch. See Table 6-6 for the Channel 1 Logic Verification messages.

Table 6-6
Channel 1 Logic Verification

Channel 1 Controls and Probe	Display
Channel 1 Input Coupling Switch	
AC	C0
GND-DC	C1
Channel 1 Probe	
1X	P0
10X	P1
CH 1 VOLTS/DIV	
2 mV to 50 mV	A11
0.1 V to 0.5 V	A01
1 V to 5 V	A10

Test Routines. The Test Routines consist of five selectable tests (t1 through t5). Initially, set the Channel 1 Input Coupling switch to AC position. The test message displayed on the readout will be "tX Y" where "X" is the test number and "Y" is either an "S" (single pass mode) or an "L" (looping mode). The selected test is started by moving the Channel 1 Input Coupling switch to either GND or DC position. In single pass mode, the test executes only once. Looping mode allows the test to automatically repeat itself until stopped (by returning the Channel 1 Input Coupling switch to AC).

Each test will halt its test sequence at the first error detected except in looping mode, where the test repeats itself after displaying the error code for a short period. This allows the examination of the state of the circuitry when the first error was discovered. To interpret the error codes displayed by the test routines, compare the test messages on the readout with the appropriate table (Tables 6-5 through 6-10).

After performing each test, return the Channel 1 Input Coupling switch to the AC position to either continue with the next test or advance to the Stimulus Loops . The front-panel controls should be set as follows before executing Test 1 through Test 5.

Set:

Channel 1 Input Coupling	AC
UPPER FUNCTIONS-	
LOWER FUNCTIONS	IN (single pass)
	OUT (looping pass)

Test 1—ROM Checksum

This test calculates the checksums of the two ROMs and compares them to the checksum values stored in the ROMs. This is equivalent to the Power-UP ROM check.

To start the test, set the Channel 1 Input Coupling switch to either GND or DC position. The readout will display "t1 ZZZZ Y" where "ZZZZ" represents either the word "PASS" or an error code. See Table 6-7 for an exolanation of the test message (in looping mode the test message will blink as the test repeats).

Table 6-7
Test 1-ROM Check Test Messages

Test Message "ZZZZ"	Explanation
PASS	Test pass
F-01	8K ROM is bad
F-02	2K ROM is bad
F-03	Both ROMs are bad

Test 2—Counter

This test is equivalent to the Power-Up Counter check and starts by resetting the counter circuitry. If the counter circuitry resets successfully, a sequence of pulses (internally derived test signals) is applied to the Sample counter to verify that the first 12 stages of the 23 stages perform correctly (the Extended Counter Test checks the last 11 stages). If the first 12 stages are performing correctly, the counter circuitry is again reset, to verify that it will reset properly. If the counter circuitry resets properly, a basic functional check is made of the Time counter. The Time counter counts up nearly to its maximum count and then compares this count against predetermined limits. At various points in the counter test procedure, the counter status line (BUSY line) is checked for correctness.

To start the test, set the Channel 1 Input Coupling switch either to GND or DC position. The readout will display "t2 ZZZZ Y" where "ZZZZ" represents either the word "PASS" or an error code. See Table 6-8 for an explanation of the test message (in looping mode the display on the readout will blink as the test repeats).

Table 6-8
Test 2-Counter Error Messages

Error Code "ZZZZ"	Explanation	Possible Cause
F-01	BUSY line stuck high after resetting the counter.	Bad Q1008 and Q1009 circuitry. Treset signal line shorted to ground.
F-02 F-03	U1100 did not reset after resetting the counter. U1101A did not reset after resetting the counter.	With each error code (F-02 through F-09) suspect the listed IC and its associated tri-state buffer for open or shorted connections.
F-04 F-05 F-06	U1102 did not reset after resetting the counter. U1103 did not reset after resetting the counter. U1200 did not reset after resetting the counter.	
F-07 F-08 F-09	U1101B did not reset after resetting the counter. U1201 did not reset after resetting the counter. U1202 did not reset after resetting the counter.	
F-10	BUSY line stuck LO after enabling and clocking U1001A.	Suspect U1001A, U1004, Q1006, Q1008 and Q1009.
F-11	Sample counter received a count from the rising edge of test signal.	Suspect U1003 and U1006.
F-12	Sample counter not receiving the test signal (bit 1 of the sample counter still LO after sending a trigger edge).	Suspect U1003 and U1004.
F-13 F-14	Bit 2 of the Sample counter stuck LO. Bit 3 of the Sample counter stuck LO.	The bit number (bit 2 through bit 12) specified for each error code (F-13 through F-23) should be HI. All other sample bits should be LO. Suspect the appropriate counter ICs. Check for shorts and opens.
F-15 F-16 F-17	Bit 4 of the Sample counter stuck LO. Bit 5 of the Sample counter stuck LO. Bit 6 of the Sample counter stuck LO.	
F-18 F-19 F-20	Bit 7 of the Sample counter stuck LO. Bit 8 of the Sample counter stuck LO. Bit 9 of the Sample counter stuck LO.	
F-21 F-22 F-23	Bit 10 of the Sample counter stuck LO. Bit 11 of the Sample counter stuck LO. Bit 12 of the Sample counter stuck LO.	
F-24	BUSY line goes LO when the ENABLE line goes LO.	Suspect U1004 and CR1002.
F-25	BUSY line remained HI when U1001A was disabled and clocked.	Suspect U1001A, CR1003.

Table 6-8 (cont)

Error Code "ZZZZ"	Explanation	Possible Cause
F-26 F-27	U1100 did not reset after resetting the counter. U1101A did not reset after resetting the counter.	With each error code (F-26 through F-33) suspect the listed IC and its associated tri-state buffer for open or shorted connections.
F-28 F-29 F-30	U1102 did not reset after resetting the counter. U1103 did not reset after resetting the counter. U1200 did not reset after resetting the counter.	
F-31 F-32 F-33	U1101B did not reset after resetting the counter. U1201 did not reset after resetting the counter. U1202 did not reset after resetting the counter.	
F-34	Sample counter did not increment after U1001A was enabled and clocked in the width mode.	Suspect U1002A and CR1001.
F-35	BUSY line remains HI when both the ENABLE line and the clock input of U1001A were set LO in the width mode.	Suspect U1004A.
F-36	The Time counter contents were out of bounds (Time counter not working correctly after making a trial measurement on the internal test signal in the width mode).	Check the 100 MHz signal line to the time counter. If necessary do Test 4 (Extended Counter Test) to check out the Time counter. Check that U1200 toggles at 100 MHz, and that the level translators (Q1200 and Q1203) are working correctly.

Test 3—DMM

This test performs measurements of ground offsets and reference voltages present in the DMM hardware and is equivalent to the Power-Up DMM test. When checking a measurement against upper and lower limits, it is the frequency of the voltage-to-frequency converter that is being checked. The output frequency of the converter is inversely proportional to the applied voltage (as the voltage becomes more positive, the frequency becomes lower).

The DMM test procedure starts by switching the multiplexer (U1905) to analog ground and switching U1907A to divide-by-one mode. For the second measurement, U1907A is switched to divide-by-five mode. For the third measurement, the multiplexer is switched to the DCV reference voltage. For the last measurement, the multiplexer is switched to the Ohms reference voltage.

To start the test, set the Channel 1 Input Coupling switch either to GND or DC position. The readout will display "t3 PASS Y" or "t3 ZZZZ Y" where "ZZZZ" represents an error code. See Table 6-9 for an explanation of the error codes.

Test 4—Extended Counter

The Extended Counter test checks the last 11 of the 23 stages of the Sample Counter and performs a more detailed check of the Time Counter. Before starting the test, move jumpers P1000, P1100, and P1200 from the Norm positions to the Test positions. With the jumpers in their test positions, Test 2 and Test 3 test messages become invalid.

The repositioning of P1000 allows both the Sample and Time Counters to count the internal test signal. The repositioning of P1100 and P1200 divides the Sample and Time counters into two shorter length counters each. This increases the testing speed.

Table 6-9
Test 3—DMM Test Error Codes

	Measurement				Explanation
	Gnd ÷ 1	**Gnd ÷ 5**	**DCV Ref ÷ 5**	**OHMS Ref ÷ 5**	
Error Codes	F-01	F-04	F-07	F-10	No signal from the voltage-to-frequency converter.
"ZZZZ"	F-02	F-05	F-08	F-11	Voltage-to-frequency converter frequency exceeds the upper limit.
	F-03	F-06	F-09	F-12	Voltage-to-frequency converter frequency less than the lower limit.

At the end of the Extended Counter test, move jumpers P1000, P1100, and P1200 from their Test positions to their Norm positions. The bit number specified for each error code should be HI. The rest should be LO. Check the apporpriate ICs, and the associated tri-state buffers.

To start the test, set the Channel 1 Input Coupling switch either to GND or DC position. The readout will display "t4 ZZZZ Y" where "ZZZZ" represents the word "PASS" or an error code. See Table 6-10 for an explanation of the error codes.

Table 6-10
Test 4—Extended Counter Error Messages

Error Code "ZZZZ"	Explanation	Possible Cause
F-01 F-02	Bit 0 of Time counter stuck LO. Bit 1 of Time counter stuck LO.	For error code "F-01", check that P1000, P1100, and P1200 are in Test position.
F-03 F-04	Bit 11 of Time counter stuck LO. Bit 2 of Time counter stuck LO.	For error code "F-03" check that P1100 and P1200 are in Test position.
F-05 F-06	Bit 12 of Time counter stuck LO. Bit 12 of Sample counter stuck LO.	For error code "F-06", check that P1100 is in Test position.
F-07 F-08	Bit 3 of Time counter stuck LO. Bit 13 of Time counter stuck LO.	
F-09 F-10	Bit 13 of Sample counter stuck LO. Bit 4 of Time counter stuck LO.	
F-11 F-12	Bit 14 of Time counter stuck LO. Bit 14 of Sample counter stuck LO.	
F-13 F-14	Bit 5 of Time counter stuck LO. Bit 15 of Time counter stuck LO.	
F-15 F-16	Bit 15 of Sample counter stuck LO. Bit 6 of Time counter stuck LO.	
F-17 F-18	Bit 16 of Time counter stuck LO. Bit 16 of Sample counter stuck LO.	
F-19 F-20	Bit 7 of Time counter stuck LO. Bit 17 of Time counter stuck LO.	
F-21 F-22	Bit 17 of Sample counter stuck LO. Bit 8 of Time counter stuck LO.	
F-23 F-24	Bit 18 of Time counter stuck LO. Bit 18 of Sample counter stuck LO.	
F-25 F-26	Bit 9 of Time counter stuck LO. Bit 19 of Time counter stuck LO.	
F-27 F-28	Bit 19 of Sample counter stuck LO. Bit 10 of Time counter stuck LO.	
F-29 F-30	Bit 20 of Time counter stuck LO. Bit 20 of Sample counter stuck LO.	
F-31 F-32	Bit 21 of Time counter stuck LO. Bit 21 of Sample counter stuck LO.	
F-33 F-34	Bit 22 of Time counter stuck LO. Bit 22 of Sample counter stuck LO.	

Test 5—Display Verification

The Display Verification test exercises the display digits so service personnel can verify correct display operation. The first part of the test turns on all the segments of each digit, one digit at a time, from left to right. This verifies that there are no open connections to the display grids and no shorts between grid drive lines. It also verifies that all the segments in each digit can be driven on.

The second part of the test turns on one segment at a time, in all the digits at once. This is for verifying that there are no shorts between segment drive lines.

To start the test, set the Channel 1 Input Coupling switch either to GND or DC position.

Stimulus Loops. To facilitate troubleshooting the CTM circuitry, there are six fast hardware stimulus loops that can be individually selected (via the SGL SWP RESET button) and run. They are designed to exercise a portion of the circuitry in a known, repeating pattern (all except Stimulus Loop 6). A stable trigger signal is provided, so that the timing relationships of various signals can be viewed and compared on a test oscilloscope.

When a particular stimulus loop is selected, the readout will display "Sn" when the loop is not running, where "n" is the stimulus loop number (1 through 6). A stimulus loop is started by changing the Channel 1 Input Coupling switch setting from the AC position to the GND or DC position. To stop a stimulus loop, return Channel 1 Input Coupling switch back to the AC position. When a stimulus loop is started, the readout will go blank (for stimulus loops 1 through 5). The selected stimulus loop must be stopped before another stimulus loop can be selected.

Stimulus Loop 1

Stimulus Loop 1 selects Period measurement mode for the counter front end and performs measurements on the internal firmware-generated test signals. See Figure 6-2 for Period test waveforms and their location. The positive-going pulse at TP1500 (TRESET) can be used as a trigger signal.

Stimulus Loop 2

Stimulus Loop 2 selects Width measurement mode for the counter front end and performs measurements on the test signal. See Figure 6-3 for width test waveforms and their location. The positive-going pulse at TP1500 (TRESET) can be used as a trigger signal.

Stimulus Loops 3, 4, and 5

These stimulus loops exercise the DMM serial interface by sending out a particular control word repetitively. Stimulus Loop 3 transmits 55 hex, Stimulus Loop 4 transmits AA hex, and Stimulus Loop 5 transmits F1 hex which is the control code that turns on the Ohms AC modulation source (used during diode test). Stimulus Loop 5 facilitates troubleshooting the diode test ciruitry in the DMM.

Stimulus Loops 3, 4, and 5 allow service personnel to troubleshoot the optoisolator interface and check the shift register receiver (U1906) for proper operation. See Figure 6-4 for the test waveforms and their locations. As with Stimulus Loops 1 and 2, the positive-going pulse at TP1500 (TRESET) can be used as a stable trigger signal for viewing the test waveforms.

Stimulus Loop 6

In Stimulus Loop 6, the DMM hardware is set up to measure diode forward-drop voltage as in the diode test in resistance measurements. To verify the forward-drop measurement accuracy, perform the following procedure.

1. Set:

Channel 1 Input Coupling	GND
UPPER FUNCTIONS-	
LOWER FUNCTIONS	IN
Function Select	DCV

2. Observe that the display on the readout is "Fd .000".

3. Apply a 2 V signal from a calibrated source to the Multimeter input connectors.

4. Read the voltage on the readout and verify measurement accuracy.

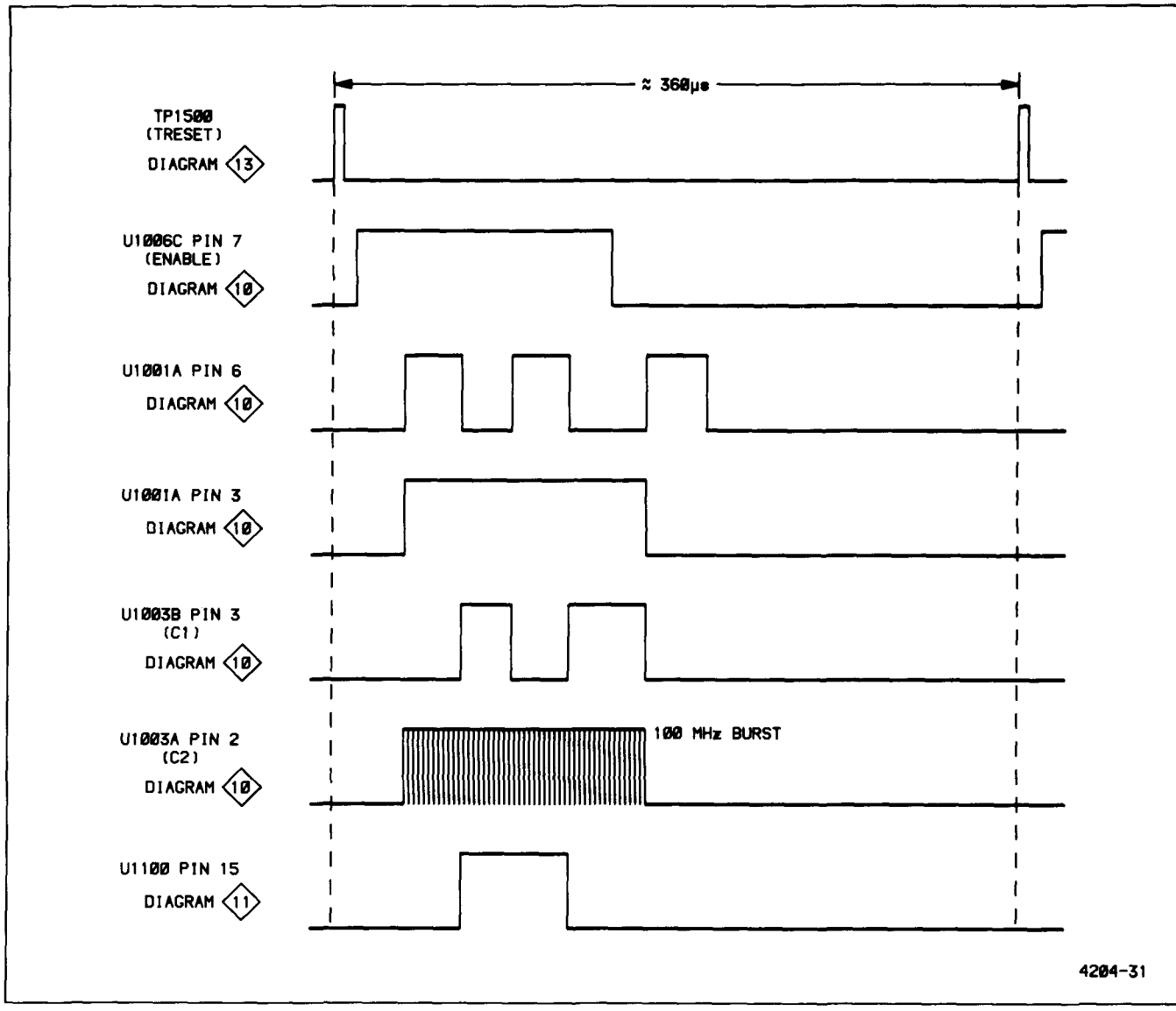

Fig. 6-2. Period measurement loop test waveforms.

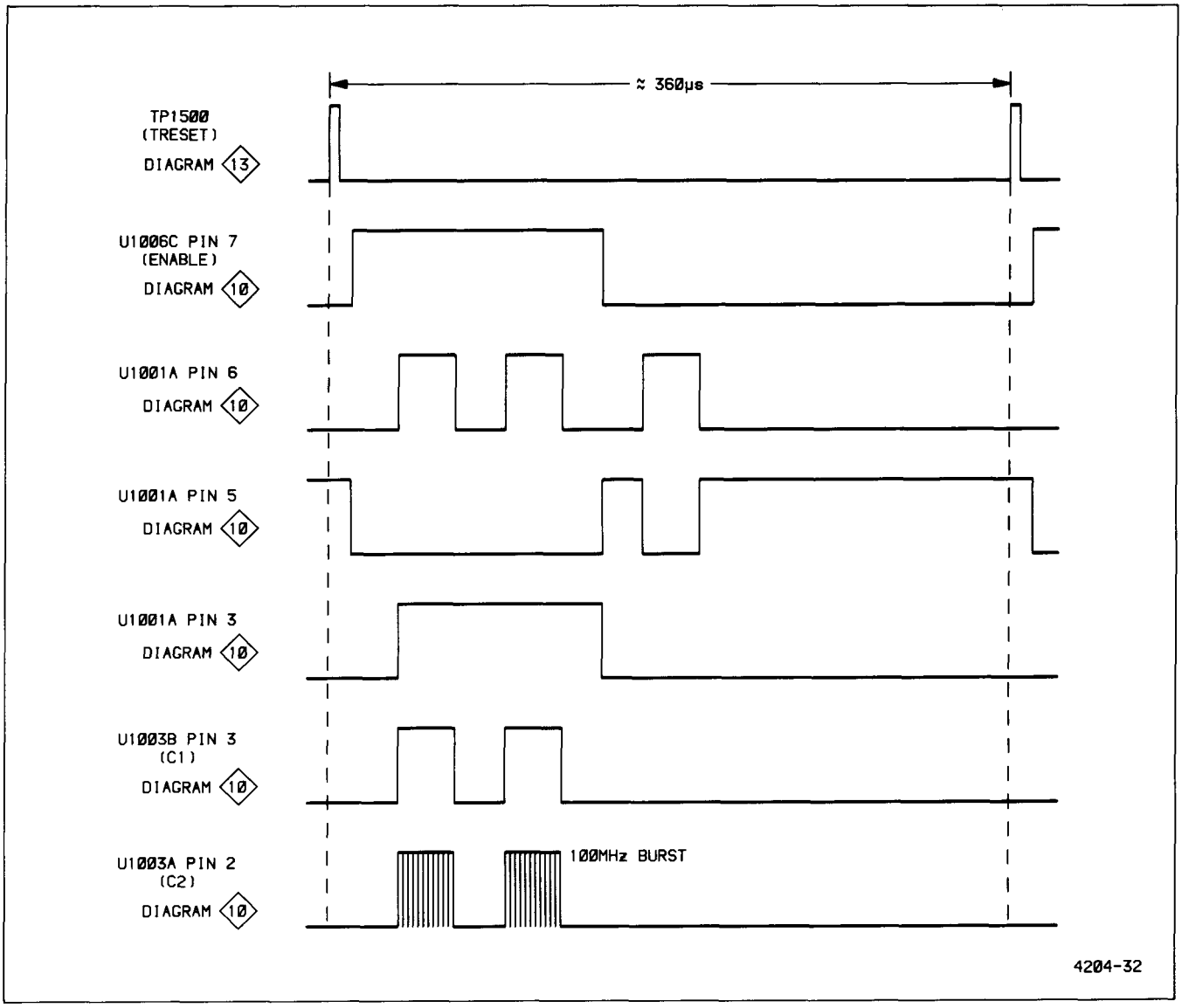

Fig. 6-3. Width measurement loop test waveforms.

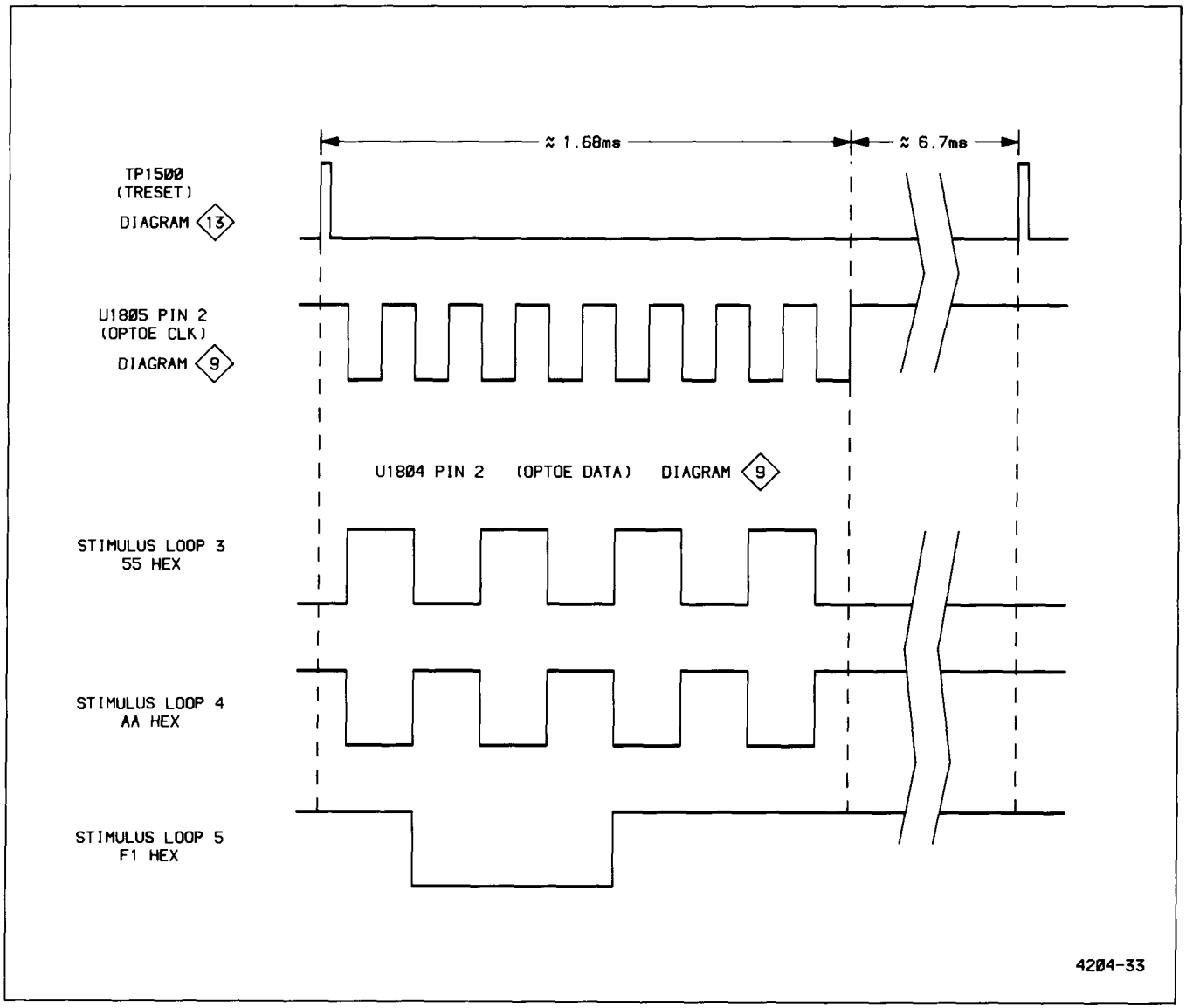

Fig. 6-4. DMM serial interface loops test waveforms.

CORRECTIVE MAINTENANCE

INTRODUCTION

Corrective maintenance consists of component replacement and instrument repair. This part of the manual describes special techniques and procedures required to replace components in this instrument. If it is necessary to ship your instrument to a Tektronix Service Center for repair or service, refer to the "Repackaging for Shipment" instructions at the end of this section.

MAINTENANCE PRECAUTIONS

To reduce the possibility of personal injury or instrument damage, observe the following precautions.

1. Disconnect the instrument from the ac power input source before removing or installing components.

2. Use care not to interconnect instrument grounds which may be at difference potentials (cross grounding).

OBTAINING REPLACEMENT PARTS

Most electrical and mechanical parts can be obtained through your local Tektronix Field Office or representative. However, many of the standard electronic components can usually be obtained from a local commercial source. Before purchasing or ordering a part from a source other than Tektronix, Inc., please check the "Replaceable Electrical Parts" list (Section 8) for the proper value, rating, tolerance, and description.

NOTE

Physical size and shape of a component may affect instrument performance, particularly at high frequencies. Always use direct-replacement components, unless it is known that a substitute will not degrade instrument performance.

Special Parts

In addition to the standard electronic components, some special parts are used in this instrument. These parts are manufactured or selected by Tektronix, Inc. to meet specific performance requirements, or are manufactured for Tektronix, Inc. in accordance with our specifications. The various manufacturers can be identified by referring to the "Cross Index-Mfr Code Number to Manufacturer" at the beginning of the "Replaceable Electrical Parts" list. Most of the mechanical parts used in this instrument were manufactured by Tektronix, Inc. Order all special parts directly from your local Tektronix Field Office or representative.

Ordering Parts

When ordering replacement parts from Tektronix, Inc., be sure to include all of the following information:

1. Instrument type (include modification or option numbers).

2. Instrument serial number.

3. A description of the part (if electrical, include its component number).

4. Tektronix part number.

MAINTENANCE AIDS

The maintenance aids listed in Table 6-11 include items required for performing most of the maintenance procedures on this instrument. Equivalent products may be substituted for the examples given, provided their characteristics are similar.

INTERCONNECTIONS

Pin connectors are used to connect wires to the interconnecting pins. They are grouped together and mounted in a plastic holder and should be removed, reinstalled, or replaced as a unit. If an individual wire or connector in the assembly is faulty, the entire cable assembly should be replaced. To provide correct orientation of this multipin connector when it is reconnected to its mating pins, an arrow is stamped on the circuit board, and a matching arrow is molded into the plastic housing of the multipin connector. Be sure these arrows are aligned with each other when the multipin connector is reinstalled.

Table 6-11
Maintenance Aids

Description	Specifications	Usage	Example
1. Soldering Iron	15 to 25 W.	General soldering and unsoldering.	Antex Precision Model C.
2. Torx Screwdrivers	Torx tips #T7, #T9, #T10, #T15, and #T20.	Assembly and disassembly.	Tektronix Part Numbers (#T7) 003-1293-00 (#T9) 003-0965-00 (#T10) 003-0814-00 (#T15) 003-0966-00 (#T20) 003-0866-00
3. Nutdrivers	1/4 inch, 5/16 inch, 1/2 inch.	Assembly and disassembly.	Xcelite #8, #10, #16, and #18.
4. Open-end Wrench	9/16 inch.	Assembly and disassembly.	
5. Hex Wrenches	0.050 inch and 1/16 inch.	Assembly and disassembly.	Allen Wrenches.
6. Long-nose Pliers		Component removal and replacement.	
7. Diagonal Cutters		Component removal and replacement.	
8. Vacuum Solder Extractor	No static charge retention.	Unsoldering components.	Pace Model PC-10.
9. Lubricant	No-Noise.	Switch lubrication.	Tektronix Part Number 006-0442-02.
10. Pin-replacement Kit		Replace circuit board connector pins.	Tektronix Part Number 040-0542-01.
11. Isolation Transformer		Isolate the instrument from the ac-power-source outlet.	Tektronix Part Number 006-5953-00.
12. 1X Probe		Power supply ripple check.	TEKTRONIX P6101 Probe (1X). Part Number 010-6101-03.
13. Bayonet Ground Assembly		Signal interconnection.	Tektronix Part Number 013-0085-00.
14. IC Test Clip	40-lead tester.	Testing DIP IC packages.	Tektronix Part Number 003-0801-00; AP Products Model TC-40.

TRANSISTORS AND INTEGRATED CIRCUITS

Transistors and integrated circuits should not be replaced unless they are actually defective. If unsoldered from the circuit board during routine maintenance, return them to their original board locations. Unnecessary replacement or transposing of semiconductor devices may affect the adjustment of the instrument. When a semiconductor is replaced, check the performance of any instrument circuit that may be affected.

Any replacement components should be of the original type or a direct replacement. Bend transistor leads to fit their circuit board holes and cut the leads to the same length as the original component. See Figure 9-2 for typical lead-configuration illustrations.

To remove a soldered dual-in-line packaged (DIP) IC, do not heat adjacent conductors consecutively. Apply heat to pins at alternate sides and ends of the IC as solder is removed. Allow a moment for the circuit board to cool before proceeding to the next pin.

The heat-sink-mounted power supply transistors are insulated from the heat sink. In addition, a heat-sink compound is used to increase heat transfer capabilities. Reinstall the insulators and replace the heat-sink compound when replacing these transistors. The compound should be applied to both sides of the insulators and should be applie to the bottom side of the transistor where it comes in cor tact with the insulator.

NOTE

After replacing a power transistor, check that the collector is not shorted to the heat sink before applying power to the instrument.

SOLDERING TECHNIQUES

The reliability and accuracy of this instrument can be maintained only if proper soldering techniques are used to remove or replace parts. General soldering techniques, which apply to maintenance of any precision electronic equipment, should be used when working on this instrument.

WARNING

To avoid an electric-shock hazard, observe the following precautions before attempting any soldering: turn the instrument off, disconnect it from the ac power source, and allow approximately three minutes for the power-supply capacitors to discharge.

Use rosin-core wire solder containing 63% tin and 37% lead. Contact your local Tektronix Field Office or representative to obtain the names of approved solder types.

When soldering on circuit boards or small insulated wires, use only a 15- to 25-watt, pencil-type soldering iron. A higher wattage soldering iron can cause etched-circuit conductors to separate from the board base material and melt the insulation on small wires. Always keep the soldering-iron tip properly tinned to ensure best heat transfer from the iron tip to the solder joint. To protect heat-sensitive components, either hold the component lead with long-nose pliers or place a heat block between the component body and the solder joint. Apply only enough solder to make a firm joint. After soldering, clean the area around the solder connection with an approved flux-removing solvent (such as isopropyl alcohol) and allow it to air dry.

CAUTION

Attempts to unsolder, remove, and resolder leads from the component side of a circuit board may cause damage to the reverse side of the circuit board.

The following techniques should be used to replace a component on any of the circuit boards:

1. Touch the vacuum desoldering tool to the lead at the older connection. Never place the iron directly on the board; doing this may damage the board.

NOTE

Some components are difficult to remove from the circuit board due to a bend placed in each lead during machine insertion of the component. The purpose of the bent leads is to hold the component in place during a solder-flow manufacturing process that solders all the components at once. To make removal of machine-inserted components easier, straighten the component leads on the reverse side of the circuit board with a small screwdriver or pliers. It may be necessary to remove the circuit board to gain access to the component leads on the reverse side of the circuit board. Circuit-board removal and reinstallation procedures are discussed later in this section.

2. When removing a multipin component, especially an IC, do not heat adjacent pins consecutively. Apply heat to pins at alternate sides and ends of the IC as solder is removed. Allow a moment for the circuit board to cool before proceeding to the next pin.

CAUTION

Excessive heat can cause the etched-circuit conductors to separate from the circuit board. Never allow the solder extractor tip to remain at one place on the board for more than three seconds. Solder wick, spring-actuated or squeeze- bulb solder suckers, and heat blocks (for desoldering multipin components) must not be used. Damage caused by poor soldering techniques can void the instrument warranty.

3. To replace the component, bend the leads of the replacement item to fit the holes in the circuit board. If the component is replaced while the board is installed in the instrument, cut the leads so they protrude only a small amount through the reverse side of the circuit board. Excess lead length may cause shorting to other conductive parts.

4. Insert the leads into the holes of the board so that the replacement component is positioned the same as the original component. Most components should be firmly seated against the circuit board.

5. Touch the soldering iron to the connection and apply enough solder to make a firm solder joint. Do not move the component while the solder hardens.

6. Cut off any excess lead protruding through the circuit board (if not clipped to size in step 3).

7. Clean the area around the solder connection with an approved flux-removing solvent. Be careful not to remove any of the printed information from the circuit board.

REMOVAL AND REPLACEMENT INSTRUCTIONS

The exploded view drawings in the "Replaceable Mechanical Parts" list (Section 9) may be helpful during the removal and reinstallation of individual subassemblies or components. Circuit board and component locations are shown in the "Diagrams" section.

Cabinet

WARNING

To avoid electric shock, disconnect the instrument from the ac-power-input source before removing or replacing any component or assembly.

To remove the instrument cabinet, perform the following steps:

1. Disconnect the power cord from the instrument. For instruments with a power-cord securing clamp; remove the Phillips-head screw holding the power-cord securing clamp before disconnecting the power cord.

2. Remove the screws from the right-rear side, the bottom front of the cabinet and two screws from the rear panel. Then remove the rear panel.

3. Pull the front panel and attached chassis forward and out of the cabinet. To reinstall the cabinet, perform the following steps:

4. Slide the back of the chassis frame into the front of the cabinet until the cabinet is fully into the front-panel groove and the rear of the cabinet is flush with the rear of the chassis.

5. Align the rear-panel and the side mounting holes with the screw holes in the chassis frame and reinstall the four screws removed in step 2.

CAUTION

To ensure that the cabinet is grounded to the instrument chassis, the screws
at the right-rear side and the bottom front of the cabinet must be tightly secured.

6. Reconnect the power cord (reinstall the securing clamp and screw removed in step 1 if applicable).

CTM Circuit Board

The following procedure describes how to lift up and secure the CTM circuit board to the chassis (steps 1 through 5) and how to remove it from the instrument (steps 6 through 11).

1. Remove the ΔTIME POSITION control knob and pull the shaft straight out from the front panel.

2. Remove the six buttons and extension shafts from the CTM switches by inserting a small screwdriver between the extension shaft and the switch shaft. Push down and forward until the extension shaft is disengaged and pull the shafts straight back through the front panel.

3. Disconnect the following connectors from the Display circuit board.

a. P2000, a ten-wire connector.

b. P2050, a nine-wire connector.

4. Remove the three screws located near the center front, middle, and rear of the CTM circuit board, identified by the words "Remove Screw To Unhinge" on the circuit board.

5. With one hand secure the left side of the CTM circuit board and with the other hand lift up the right end of the Board Latch. Raise up the CTM circuit board to its standing position, ensuring that the Board Latch clears the top of the chassis side rail. Release the Board Latch and lock it in place into the chassis side rail.

6. Disconnect the following connectors from the inside of the instrument.

a. P2100, a four-wire connector located at the top of the Alt Sweep circuit board.

b. P2200, a six-wire connector located on the right side of the Alt Sweep circuit board.

c. P2300, a five-wire connector located on the right side of the Main circuit board.

d. P2400, a five-wire connector located on the right side of the Main circuit board.

e. P2500, a two-wire connector located on the Main circuit board under the Bottom Shield, Attenuator and Timing circuit-board module.

f. P2600, a two-wire connector located on the Main circuit board behind the Bottom Shield, Attenuator and Timing circuit-board module.

g. P2700, a three-wire connector located on the Main circuit board behind the Alt Sweep circuit board.

h. P2800, a four-wire connector located at the rear of the CH 1 Logic Switch circuit board.

i. P2900, a two-wire connector located on the left side of the CH 1 VOLTS/DIV switch assembly under the top shield.

7. Remove the cable strap from the Alt Sweep circuit board by squeezing the strap together with a long-nose pliers on the back side of the circuit board. Slide the strap through the hole toward the front of the Alt Sweep circuit board.

8. Release the Board Latch and lower the CTM circuit board (lifted up in step 5) into the instrument.

9. Remove the screw on top of the right chassis side rail that holds the rear hinge to the CTM circuit board, separate hinge and remove loosned half.

10. Slide the CTM circuit board back until the front and middle hinges separate.

11. Pull forward and lift the CTM circuit board out of the instrument.

To reinstall the CTM circuit board, perform the following steps:

12. Insert the CTM circuit board into the top of the instrument. Ensure that the two forward hinges on the CTM circuit board are behind the hinges mounted on the chassis side rail.

13. Slide the CTM circuit board forward until the middle and the front hinges on the CTM circuit board are inserted into the hinges on the chassis rail.

14. Replace separated portion of the rear hinge and the screw removed in step 9.

15. Raise up and secure the CTM circuit board to the chassis rail (released in step 8).

16. Reinstall the cable strap remove in step 7.

17. Reconnect the eight connectors from the CTM circuit board (disconnected in step 6).

18. Release the Board Latch and lower the CTM circuit board into the instrument (removed in step 5).

19. Reinstall three screws securing the CTM circuit board to the instrument (removed in step 4).

20. Reconnect two connectors to the Display circuit board (disconnected in step 3).

21. Reinstall six pushbuttons and shaft extensions (removed in step 2).

22. Reinstall the ΔTIME POSITION control shaft and knob (removed in step 1).

Display Circuit Board

To remove the Display circuit board, perform the following steps:

1. Disconnect the following connectors from the Display circuit board.

a. P2000, a ten-wire connector.

b. P2050, a nine-wire connector.

2. Remove two screws securing the Display circuit board to the instrument front panel.

3. Tilt the Display circuit board back and lift up. Ensure that the readout evacuation tube clears the Front Panel circuit board.

To reinstall the Display circuit board, perform the following steps:

4. Reinstall the Display circuit board behind the readout window (removed in step 3).

5. Reinstall two screws to the rear of the Display circuit board (removed in step 2).

6. Reconnect two connectors to the Display circuit board (disconnected in step 1).

CTM Bottom Cover

To remove the CTM bottom cover, perform the following steps:

1. Remove the two screws holding the aluminum cover to the CTM circuit board and lift the aluminum cover off.

2. Remove four screws located on the right side behind the CTM plastic cover.

3. Lift up and secure the CTM circuit board (see "CTM Circuit Board" removal procedure).

4. Remove two screws located on the left side of the CTM circuit board (component side).

5. Gently lift the aluminum cover from the Multimeter connector holder tabs.

To reinstall the CTM bottom shield, perform the following steps:

6. Reinstall the CTM bottom shield and ensure that the Multimeter connector holder tabs are in place inside the slots of the bottom shield. (remove in step 5).

7. Reinstall two screws securing the left side of the CTM bottom shield to the CTM circuit board (removed in step 4).

8. Release the Board Latch and lower the CTM circuit board back into the instrument (removed in step 3).

9. Reinstall four screws securing the right side of the CTM bottom shield to the CTM circuit board (removed in step 2).

10. Reinstall the aluminum cover and two screws removed in step 1.

CTM Insulator Box and Multimeter Control Circuit Board

1. Remove three screws from the CTM insulator box, remove the CTM insulator box from CTM circuit board.

2. Remove the CTM bottom shield (see "CTM Bottom Shield" removal procedure).

3. Gently pull the Multimeter Control circuit board straight out until the interconnecting pins are disengaged from the CTM circuit board.

To reinstall the CTM insulator box and Multimeter Control circuit board perform the following steps.

4. Gently replace the Multimeter Control circuit board, aligning the interconnecting pins with their respective sockets (removed in step 3).

5. Replace the CTM bottom shield (see "CTM Bottom Shield" removal procedure).

6. Reinstall three screws securing the CTM insulator box to the CTM circuit board (removed in step 1).

NOTE

Inspect the conductive paint and plastic shield on the inside of the cover for damage. At the circular pad and edge check for continuity of the conductive paint. If either the plastic shield or the conductive paint is damaged, replace the complete plastic cover.

Cathode-Ray Tube

WARNING

Use care when handling a crt. Breakage of the crt may cause high-velocity scattering of glass fragments (implosion). Protective clothing and safety glasses should be worn. Avoid striking the crt on any object which may cause it to crack or implode. When storing a crt, either place it in a protective carton or set it face down on a smooth surface in a protected location with a soft mat under the faceplate.

To remove the crt, perform the following steps:

1. Lift up and secure the CTM circuit board (see "CTM Circuit Board" removal procedure).

2. Disconnect four deflection-plate wires at the middle of the crt neck and unplug the Trace Rotation connector (P9006) from the Front-Panel circuit board (note the connection locations and wire colors for reinstallation reference).

WARNING

The crt anode lead and the High-Voltage Multiplier output lead retain a high-voltage charge after the instrument is turned off. To avoid electrical shock, disconnect the High-Voltage Multiplier lead from the crt anode lead and ground both leads to the main instrument chassis.

3. Unplug the crt anode lead connector from the High-Voltage Multiplier lead located on left side of Power-Supply shield and discharge it to the chassis.

4. Remove two front-panel screws that retain the plastic crt frame and light filter to the front panel. Remove the crt frame and light filter from the instrument.

5. Remove the crt socket cap from the rear of the crt socket for reinstallation.

6. With the rear of the instrument facing you, place the fingers of both hands over the front edge of the front subpanel. Then, using both thumbs, press forward gently on the crt funnel near the front of the crt. When the crt base pins disengage from the socket, remove the crt and the crt shield through the instrument front subpanel. Place the crt in a safe place until it is ready to reinstall. If the plastic crt corner pads fall out, save them for reinstallation.

To reinstall the crt, perform the following steps:

7. Reinstall any plastic crt corner pads that are out of place. Insert the crt, crt shield, anode lead, and Trace Rotation leads through the front-panel opening. Ensure all pins are straight and that the indexing keys on the crt base, socket, and shield are aligned. Make sure that the ground clip makes contact only with the outside of the crt shield.

8. Push the crt base into the socket. Verify that the crt base and socket are flush together as viewed from the rear and that the crt is seated properly in the front-panel opening.

9. Reinstall the crt socket cap to the rear of the crt socket (removed in step 5).

10. Reinstall the crt frame and light filter; then secure them with two front-panel screws (removed in step 4).

11. Reconnect the crt anode lead to the High-Voltage Multiplier lead (disconnected in step 3).

12. Reconnect the four deflection-plate wires and the Trace Rotation connector (disconnected in step 2).

13. Unlock the CTM circuit board and lower it into the instrument (see "CTM Circuit Board" removal procedure).

Power-Supply Shield

To remove the Power-Supply shield, perform the following steps:

1. Remove the CTM circuit board (see the "CTM Circuit Board" removal procedure).

2. Remove the screw from the plastic power-supply cover on the bottom section of the Main circuit board. Press gently on the rear of the cover and slide it forward.

3. Remove the screw securing the Power-Supply shield to the Main circuit board (located at the bottom of the circuit board near the middle right side of the frame).

4. Remove three screws securing the Power-Supply shield to the back of the chassis frame. Two screws are located at the left rear and one screw is located at the upper-right corner of the Power-Supply shield.

5. Remove the crt anode lead from the anode clip on the side of the Power-Supply shield.

6. Remove the screw from the front upper-right hand corner of the Power-Supply shield.

7. Lift the shield up and out of the chassis frame by removing the right rear corner first.

To reinstall the Power-Supply shield, perform the following steps:

8. Insert the shield into the chassis frame. Make sure that the shield's right and back edges are in their chassis frame guides, that the crt socket-wire assembly is in its cutout, and that the Alt Sweep board is in its plastic holder.

9. Reinstall the screw at the upper-right hand corner of the shield (removed in step 6).

10. Reinstall the crt anode lead into the anode clip on the side of the Power-Supply shield (removed in step 5).

11. Reinstall three screws securing the shield to the back of the chassis frame (removed in step 4).

12. Reinstall the screw holding the Power Supply shield to the Main circuit board at the right side of the frame (removed in step 3).

13. Reinstall the plastic power-supply cover on the bottom of the Main circuit board and secure both the shield and the cover with one screw (removed in step 2).

14. Reinstall the CTM circuit board (see "CTM Circuit Board" reinstallation procedure).

Filter Circuit Board

To remove the Filter circuit board, perform the following steps:

1. Remove the CTM circuit board (see the "CTM Circuit Board" removal procedure).

2. Remove the Power-Supply shield (see the "Power-Supply Shield" removal procedure).

3. Remove five wires to the Filter circuit board by unsoldering two wires from the Main circuit board, two from the line filter, and one wire from the fuse holder (pull the protective cap completely off the fuse holder before unsoldering).

4. Remove two screws securing the Filter circuit board to the back of the chassis frame. Lift the Filter circuit board out of the instrument.

To reinstall the Filter circuit board, perform the following steps:

5. Reinstall two screws securing the Filter circuit board to the back of the chassis frame (removed in step 4).

6. Resolder the five wires from the Filter circuit board to the Main circuit board, line filter, and fuse holder (unsoldered in step 3).

7. Reinstall the Power-Supply shield (see the "Power-Supply Shield" reinstallation procedure).

8. Reinstall the CTM circuit board (see "CTM Circuit Board" reinstallation procedure).

Alt Sweep Circuit Board

To remove the Alt Sweep circuit board, perform the following steps:

1. Lift up and secure the CTM circuit board (see "CTM Circuit Board" removal procedure).

2. Disconnect the following connectors from the Alt Sweep circuit board:

a. P2100, a four-wire connector located at the top of the circuit board.

b. P2200, a six-wire connector located on the right side of the circuit board.

3. Disconnect P2700, a three-wire connector located on the Main circuit board located behind the Alt Sweep circuit board.

4. Remove the cable strap from the Alt Sweep circuit board by squeezing the strap together with long-nose pliers on the back side of the circuit board. Slide the strap through the hole toward the front of the Alt Sweep circuit board.

5. Use a vacuum-desoldering tool to unsolder the 27 pins (between the Alt Sweep circuit board and the Main circuit board) from the Main circuit board.

6. Remove the Alt Sweep circuit board from the instrument by unclipping it from the plastic holder attached to the Power-Supply shield.

To reinstall the Alt Sweep circuit board, perform the following steps:

7. Insert the 27 pins of the Alt Sweep circuit board into the Main circuit board.

8. Reinstall the Alt Sweep circuit board into the plastic holder attached to the Power-Supply shield.

9. Resolder the 27 pins to the Main circuit board (unsoldered in step 5).

10. Reinstall cable strap into the Alt Sweep circuit board (removed in step 4).

11. Reconnect the three connectors to the Alt Sweep and Main circuit boards (disconnected in steps 2 and 3).

12. Unlock the CTM circuit board and lower it into the instrument (see "CTM Circuit Board" removal procedure).

Attenuator and CH 1 Logic Switch Circuit Boards

To remove the Attenuator and CH 1 Logic Switch circuit boards, perform the following steps:

1. Use a 1/16-inch hex wrench to loosen the set screws on both the CH 1 and CH 2 VOLTS/DIV Variable knobs and remove the knobs.

2. Set the CH 1 and CH 2 VOLTS/DIV switches to the same position. Note switch positions for reinstallation reference; then remove the knobs by pulling them straight out from the front panel.

3. Remove two screws securing the Attenuator board to the subpanel (located underneath the CH 1 and CH 2 input connectors).

4. Unsolder the resistors from the CH 1 and CH 2 input connectors.

5. Lift up and secure the CTM circuit board (see "CTM Circuit Board" removal procedure).

6. Remove one screw and end of the ground strap from the top of the Front-Panel circuit board (ground strap from the top shield).

7. Remove five screws securing the top shield to both the Attenuator circuit board and the bottom shield. Remove the top shield, the ground strap from the Front-Panel circuit board and one end of the ground strap from the rear of the Attenuator circuit board.

8. Disconnect the following connectors from the Attenuator circuit board, noting their locations for reinstallation reference:

a. P2800, a four-wire connector located at the rear of the CH 1 Logic Switch circuit board.

b. P2900, a two-wire connector located on the left side of the CH 1 VOLTS/DIV switch assembly.

c. P9091, a three-wire connector located between the Channel 1 and Channel 2 Variable potentiometers at the rear of the Attenuator circuit board.

d. P9103, a four-wire connector located behind the CH 1 VOLTS/DIV switch assembly.

e. P9108, a four-wire connector located behind the CH 2 VOLTS/DIV switch assembly.

9. Remove two screws and the ground strap from the rear of the Attenuator circuit board.

10. Pull the Attenuator and CH 1 Logic Switch circuit boards straight back from the front of the instrument until the circuit boards interconnecting pins are disengaged and the switch shafts are clear of both the Front-Panel circuit board and the two Input Coupling switch shafts (located between the front panel and the subpanel). Then lift out the entire assembly through the top of the instrument.

To reinstall the Attenuator and CH 1 Logic Switch circuit boards, perform the following steps:

11. Insert the two VOLTS/DIV switch shafts and the Input Coupling switch shafts into the front-panel holes. Ensure that the interconnecting pins are aligned with the Front-Panel circuit board connectors and that the two resistors (soldered to the bottom of the Attenuator circuit board) do not touch the Front-Panel circuit board. Push the Attenuator circuit board forward and, at the same time, press the front end of the board down slightly. Align the two Input Coupling switch shafts with the front-panel holes by moving either the Channel 1 or the Channel 2 Input Coupling switch knob.

12. Reinstall two screws and ground strap to the rear of the Attenuator circuit board (removed in step 9).

13. Reconnect five connectors to the Attenuator and CH 1 Logic Switch circuit boards (disconnected in step 8).

14. Replace the top shield and reinstall the five screws and the ends of the two ground straps (removed in step 7).

15. Reinstall the screw and the end of the ground strap to the Front-Panel circuit borad (removed in step 6).

16. Unlock the CTM circuit board and lower it into the instrument (see "CTM Circuit Board" removal procedure).

17. Resolder the resistors to the CH 1 and CH 2 input connectors (disconnected in step 4).

18. Reinstall two screws securing the Attenuator board to the subpanel (removed in step 3).

19. Reinstall the two VOLTS/DIV knobs at the positions noted in step 2.

20. Rotate the two Variable control shafts fully clockwise to their calibrated detent positions.

21. Reinstall the Variable knobs onto their shafts (with lettering horizontal and right-side up) and tighten the set screws.

Timing Circuit Board

To remove the Timing circuit board, perform the following steps:

1. Lift up and secure the CTM circuit board (see "CTM Circuit Board" removal procedure).

2. Use a 1/16-inch hex wrench to loosen the setscrew of the SEC/DIV Variable knob.

3. Lock the A and B SEC/DIV knobs together and note the position for reinstallation reference. Use a 1/4-inch nut driver to remove the nut securing the B SEC/DIV knob; pull off the knob and collet from the shaft assembly.

4. Use a 1/16-inch hex wrench to loosen two set screws securing the A SEC/DIV dial to the shaft assembly.

5. Disconnect the following connectors from the Timing circuit board.

a. P9700, a 10-wire connector located on the right edge of the Timing circuit board.

b. P9705, an eight-wire connector located at the rear of the Timing circuit board.

6. Remove one screw at the rear of the Attenuator circuit board (securing both the Attenuator and the Timing circuit boards to the Bottom shield).

7. Remove the remaining three screws securing the Timing circuit board to the Bottom shield.

8. Pull the Timing circuit board straight back from the front of the instrument until the circuit board interconnecting pins are disengaged and the switch shaft is clear of the Front-Panel circuit board.

To reinstall the Timing circuit board, perform the following steps:

9. Insert the SEC/DIV switch shaft through the hole in the Front-Panel circuit board, ensuring that the interconnecting pins are aligned with the Front-Panel connectors. Push the Timing circuit board forward into position.

10. Reinstall three screws securing the Timing circuit board to the Bottom shield (removed in step 7).

11. Reinstall the remaining screw at the rear of the Attenuator circuit board securing both the Attenuator and the Timing circuit boards to the Bottom shield (removed in step 6).

12. Reconnect two connectors to the Timing circuit board (disconnected in step 5).

13. Reinstall the A SEC/DIV dial in the position noted in step 3 and secure it with two set screws lossened in step 4.

14. Reinstall the collet and the B SEC/DIV knob at the position noted in step 3 and secure it with the nut.

15. Reinstall the SEC/DIV Variable knob onto its shaft (with lettering horizontal and right-side up) and tighten the set screw.

16. Unlock the CTM circuit board and lower it into the instrument (see "CTM Circuit Board" removal procedure).

Bottom Shield, Attenuator and Timing Circuit Board Module

Removal of the module consisting of the Bottom shield and the Attenuator and Timing circuit boards is accomplished by the following steps:

1. Lift up and secure the CTM circuit board (see "CTM Circuit Board" removal procedure).

2. Perform steps 2 through 8 of the "Attenuator and CH 1 Logic Switch Circuit Board" removal procedure.

3. Perform steps 2 through 5 of the "Timing Circuit Board" removal procedure.

4. Place the instrument on its side and remove four screws holding the Bottom shield to the Main circuit board.

5. Pull the Bottom shield, along with the attached circuit boards straight back from the front of the instrument until the interconnecting pins on the circuit boards are disengaged and the switch shafts are clear of the holes in the Front-Panel circuit board; then lift out the entire assembly through the top of the instrument.

6. If accessibility to the bottom of either the Attenuator or the Timing Circuit board is desired, refer to step 9 of the "Attenuator and CH 1 Logic Switch Circuit Boards" removal procedure and to steps 6 and 7 of the "Timing Circuit Board" removal procedure.

To reinstall the Bottom-shield-Attenuator-Timing assembly, perform the following steps:

7. If one or both of the circuit boards was removed, reinstall the circuit board(s) to the Bottom shield by referring to step 12 of the "Attenuator and CH 1 Logic Switch Circuit Boards" reinstallation procedure and to steps 10 and 11 of the "Timing Circuit Board" reinstallation procedure.

8. Insert the three switch shafts through the holes in both the Front-Panel circuit board and the front panel (refer to the "Attenuator and CH 1 Logic Switch Circuit Boards" and the "Timing Circuit Board" reinstallation procedures).

9. Reinstall the four screws holding the Bottom shield to the Main circuit board (removed in step 4).

10. Perform steps 13 through 15 of the "Attenuator and CH 1 Logic Switch Circuit Boards" reinstallation procedure and step 12 of the of the "Attenuator Circuit Board" reinstallation procedure and steps 13 through 15 of the "Timing Circuit Board" reinstallation procedure.

Front-Panel Circuit Board

1. Remove the CTM circuit board (see the "CTM Circuit Board" removal procedure).

2. Remove the crt (see the "Cathode-Ray Tube" removal procedure).

3. Remove the Bottom shield, Attenuator and Timing circuit-board module (see the preceding removal procedure).

4. Remove the knobs from the following control shafts by pulling them straight out from the front panel:

a. Channel 1 and Channel 2 POSITION,

b. A/B SWP SEP,

c. Horizontal POSITION,

d. A TRIGGER LEVEL,

e. B TRIGGER LEVEL.

5. Unsolder both the resistor to the EXT INPUT center connector and the wire strap to the EXT INPUT ground lug.

6. Unsolder the single wire from the PROBE ADJUST connector and the two wires from the VAR HOLDOFF control (leading to the Front-Panel circuit board).

7. Remove the following screws:

a. Three screws securing the upper part of the Front-Panel circuit board to the front panel.

b. Two recessed frame-securing screws at the left-rear corner of the chassis frame.

c. Two screws holding the Main circuit board to the chassis frame.

d. One screw securing the delay line to the chassis frame on the left side of the instrument.

e. Two recessed frame-securing screws at the right-front corner.

8. Pull the left-front frame assembly apart from the right-rear frame assembly.

NOTE

At this point, any component on the Front-Panel circuit board may be accessed for removal and replacement. Skip to step 12 of this procedure after component replacement. If circuit board replacement is intended, continue with the remaining disassembly steps.

9. Use a vacuum-desoldering tool to unsolder the 39 wire straps from the Main circuit board (connecting to the Front-Panel circuit board).

10. Remove the Front-Panel circuit board from the instrument and clean the wire-strap holes on the Main circuit board of any remaining solder.

NOTE

If a vacuum-desoldering tool is not available, lift each strap out of the Main circuit board as the joint is heated.

To reinstall the Front-Panel circuit board, perform the following steps:

11. Insert and resolder the 39 wire straps on the Front-Panel circuit board into their corresponding holes in the Main circuit board (unsoldered in step 9).

12. Align the two chassis frame assemblies disassembled in step 8, making sure the POWER switch extension-shaft button is properly placed in the front panel.

13. Reinstall four chassis-frame securing screws, two screws securing the Main circuit board to the chassis frame, and one screw securing the delay line to the chassis frame (removed in step 7, parts b through e).

14. Push the Front-Panel circuit board forward and insert the control shafts, push buttons, and three-position slide switches into their corresponding front-panel holes.

15. Reinstall three screws securing the Front-Panel circuit board to the front panel (removed in step 7, part a).

16. Resolder the single wire to the PROBE ADJUST connector and the two wires to the VAR HOLDOFF control (unsoldered in step 6).

17. Resolder the resistor to the EXT INPUT center connector and the wire strap to the EXT INPUT ground lug (unsoldered in step 5).

18. Replace the front-panel knobs (removed in step 4).

19. Reinstall the Bottom shield, Attenuator, and Timing circuit-board module (see the preceding reinstallation procedure).

20. Reinstall the crt (see the "Cathode-Ray Tube" reinstallation procedure).

21. Reinstall the CTM circuit board (see "CTM Circuit Board" reinstallation procedure).

Main Circuit Board

All components on the Main circuit board are accessible either directly or by removing either the CTM circuit board, the crt, the Bottom shield, Attenuator, Timing circuit-board module, or the Power-Supply shield. Removal of the Main circuit board is required only when it is necessary to replace the board with a new one.

To remove the Main circuit board, perform the following steps:

1. Remove the CTM circuit board (see the "CTM Circuit Board" removal procedure).

2. Disconnect the three-wire B DELAY TIME POSITION potentiometer connector (P9644) from the Main circuit board (located in front of the Power-Supply shield).

3. Remove the Alt Sweep circuit board (see "Alt Sweep Circuit Board" removal procedure).

4. Remove the Power-Supply shield and plastic power-supply cover (see "Power-Supply Shield" removal procedure).

5. Unsolder five wires from the Filter circuit board (leading to the Main circuit board).

6. Remove connectors from the Attenuator and Timing circuit boards, noting their locations for reinstallation reference.

7. Remove the FOCUS control shaft assembly by pulling it straight out from the front panel.

8. Remove the POWER switch extension-shaft assembly by first pressing in the POWER button to the ON position. Then insert a scribe (or similar tool) into the notch between the end of the switch shaft and the end of the extension shaft and gently pry the connection apart. Push the extension shaft forward, then sideways, to clear the switch shaft. Finally, pull the extension shaft back and out of the instrument.

9. Disconnect P9001 and P9002 from the rear of the Main circuit board near the fuse holder.

10. Unsolder the rear-panel EXT Z AXIS connector wire from the Main circuit board.

11. Remove two screws securing the power-supply transistor heat-sink assembly (at the right side of the chassis frame.

WARNING

The crt anode lead and the output terminal to the High-Voltage Multiplier will retain a high-voltage charge after the instrument is turned off. To avoid electrical shock, ground the crt side of the anode lead to the main instrument chassis.

12. Disconnect the crt anode lead from the High-Voltage Multiplier anode lead by carefully pulling the anode plug out of the jack. Discharge the plug tip to the chassis.

13. Unsolder two sets of crt socket wires from the Main circuit board, noting wire color and position for reinstallation reference.

14. Unsolder two sets of delay-line wires from the Main circuit board, noting wire color and position for reinstallation reference.

15. Remove three screws securing the Bottom shield to the Main circuit board.

16. Remove three screws securing the Main circuit board to the instrument chassis frame (one under the EXT Z AXIS connector and two along the left side of the Main circuit board).

17. Use a vacuum-desoldering tool to unsolder the 39 wire straps (connecting the Main circuit board to the Front-Panel circuit board) from the Main circuit board.

NOTE

If a vacuum-desoldering tool is not available, lift each wire strap out of the Main circuit board as the joint is heated. Use care to maintain, as nearly as possible, the original shape and spacing of the wire straps to facilitate replacing the circuit board.

18. Push the wire-strap connection end of the Main circuit board down until it is clear of all wire strap ends; then remove it through the bottom of the instrument frame. Ensure that the wire straps are not bent out of place.

To replace the Main circuit board, use the following procedure:

19. Place the Main circuit board into the chassis frame, ensuring that the board is in the guides at the rear and right side of the frame and that the 39 wire straps are inserted into their corresponding holes.

20. Reinstall three screws securing the Main circuit board to the chassis frame (removed in step 16).

21. Resolder 39 wire straps to the Main circuit board.

22. Reinstall three screws holding the bottom shield to the Main circuit board (removed in step 15).

23. Resolder two sets of delay-line wires at the locations noted in step 14.

24. Resolder two sets of crt socket wires at the locations noted in step 13.

25. Reconnect the crt anode lead to the High-Voltage Multiplier anode lead (disconnected in step 12).

26. Reinstall two securing screws in the power-supply transistor heat sink assembly (removed in step 11).

27. Insert and resolder the EXT Z AXIS connector wire into the Main circuit board (removed in step 10).

28. Reconnect P9001 and P9002 to the Main circuit board (removed in step 9).

29. Insert the POWER switch extension-shaft assembly into the front panel (from the rear). Push the POWER switch to the ON lock position and align the extension shaft with the switch shaft. Press them together gently until they snap into place.

30. Reinstall the FOCUS control shaft assembly (removed in step 7).

31. Reconnect the connectors to the Attenuator and Timing circuit boards (removed in step 6).

32. Resolder five wires from the Filter circuit board to the Main circuit board (unsoldered in step 5).

33. Reinstall the Power-Supply shield and plastic power-supply cover (see "Power-Supply Shield" reinstallation procedure).

34. Reinstall the Alt Sweep circuit board (see "Alt Sweep Circuit Board" reinstallation procedure).

35. Reconnect the B DELAY TIME POSITION potentiometer connector (P9644) to the Main circuit board (disconnected in step 2).

36. Reinstall the CTM circuit board (see "CTM Circuit Board" reinstallation procedure).

REPACKAGING FOR SHIPMENT

If the instrument is to be shipped to a Tektronix Service Center for service or repair, attach a tag showing; owner (with address) and the name of an individual at your firm that can be contacted. Include complete instrument serial number and a description of the service required.

Save and reuse the package in which your instrument was shipped. If the original packaging is unfit for use or not available, repackage the instrument as follows:

Surround the instrument with polyethylene sheeting to protect its finish. Obtain a carton of corrugated cardboard having a carton test strength of 275 pounds and having

inside dimensions of no less than six inches more than the instrument dimensions. Cushion the instrument by tightly packing three inches of dunnage or urethane foam between carton and instrument, on all sides. Seal carton with shipping tape or industrial stapler.

SELECTABLE COMPONENTS

If desired, the trigger-system bandwidth of the instrument may be reduced from the normal 20 MHz to frequencies shown in Table 6-12. To alter the bandwidth, remove C419 (component number A1C419 on Diagram 3) from the Main Circuit Board using the steps in the "Soldering Techniques" part of the "Maintenance" section. The capacitor should be replaced with a non-polarized type such as a disc-ceramic or equivalent.

Table 6-12
Trigger Bandwidth Alternation

Trigger Bandwidth	Capacitor Value
20 MHz	180 pF
10 MHz	390 pF
5 MHz	750 pF
1 MHz	3300 pF
50 kHz	0.068 μF
10 kHz	0.33 μF

OPTIONS

INTRODUCTION

There is presently only one option available for the 2236. A brief description of this option is given in the following paragraph. For further information about this instrument option, see your Tektronix Catalog or contact your Tektronix Field Office or representative.

OPTION 14

Option 14 replaces the internal 10 MHz time base (clock) circuit with a self-contained temperature-compensated crystal oscillator for increased accuracy and stability.

REPLACEABLE ELECTRICAL PARTS

PARTS ORDERING INFORMATION

Replacement parts are available from or through your local Tektronix, Inc. Field Office or representative.

Changes to Tektronix instruments are sometimes made to accommodate improved components as they become available, and to give you the benefit of the latest circuit improvements developed in our engineering department. It is therefore important, when ordering parts, to include the following information in your order: Part number, instrument type or number, serial number, and modification number if applicable.

If a part you have ordered has been replaced with a new or improved part, your local Tektronix, Inc. Field Office or representative will contact you concerning any change in part number.

Change information, if any, is located at the rear of this manual.

LIST OF ASSEMBLIES

A list of assemblies can be found at the beginning of the Electrical Parts List. The assemblies are listed in numerical order. When the complete component number of a part is known, this list will identify the assembly in which the part is located.

CROSS INDEX-MFR. CODE NUMBER TO MANUFACTURER

The Mfr. Code Number to Manufacturer index for the Electrical Parts List is located immediately after this page. The Cross Index provides codes, names and addresses of manufacturers of components listed in the Electrical Parts List.

ABBREVIATIONS

Abbreviations conform to American National Standard Y1.1.

COMPONENT NUMBER (column one of the Electrical Parts List)

A numbering method has been used to identify assemblies, subassemblies and parts. Examples of this numbering method and typical expansions are illustrated by the following:

Example a.

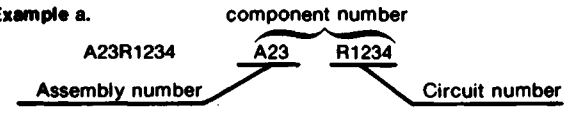

Read: Resistor 1234 of Assembly 23

Example b.

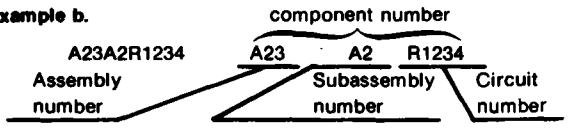

Read: Resistor 1234 of Subassembly 2 of Assembly 23

Only the circuit number will appear on the diagrams and circuit board illustrations. Each diagram and circuit board illustration is clearly marked with the assembly number. Assembly numbers are also marked on the mechanical exploded views located in the Mechanical Parts List. The component number is obtained by adding the assembly number prefix to the circuit number.

The Electrical Parts List is divided and arranged by assemblies in numerical sequence (e.g., assembly A1 with its subassemblies and parts, precedes assembly A2 with its subassemblies and parts).

Chassis-mounted parts have no assembly number prefix and are located at the end of the Electrical Parts List.

TEKTRONIX PART NO. (column two of the Electrical Parts List)

Indicates part number to be used when ordering replacement part from Tektronix.

SERIAL/MODEL NO. (columns three and four of the Electrical Parts List)

Column three (3) indicates the serial number at which the part was first used. Column four (4) indicates the serial number at which the part was removed. No serial number entered indicates part is good for all serial numbers.

NAME & DESCRIPTION (column five of the Electrical Parts List)

In the Parts List, an Item Name is separated from the description by a colon (:). Because of space limitations, an Item Name may sometimes appear as incomplete. For further Item Name identification, the U.S. Federal Cataloging Handbook H6-1 can be utilized where possible.

MFR. CODE (column six of the Electrical Parts List)

Indicates the code number of the actual manufacturer of the part. (Code to name and address cross reference can be found immediately after this page.)

MFR. PART NUMBER (column seven of the Electrical Parts List)

Indicates actual manufacturers part number.

CROSS INDEX - MFR. CODE NUMBER TO MANUFACTURER

Mfr. Code	Manufacturer	Address	City, State, Zip Code
00136	MCCOY ELECTRONICS CO	MATTS AND CHESTNUT ST	MT HOLLY SPRINGS PA 17065
00853	SANGAMO WESTON INC SANGAMO CAPACITOR DIV	SANGAMO RD P O BOX 128	PICKENS SC 29671
01121	ALLEN-BRADLEY CO	1201 SOUTH 2ND ST	MILWAUKEE WI 53204
01281	TRW INC TRW SEMICONDUCTOR DIV	14520 AVIATION BLVD	LAWNDALE CA 90260
01295	TEXAS INSTRUMENTS INC SEMICONDUCTOR GROUP	13500 N CENTRAL EXPRESSWAY P O BOX 225012 M/S 49	DALLAS TX 75265
02111	SPECTROL ELECTRONICS CORP SUB OF CARRIER CORP	17070 E GALE AVE P O BOX 1220	CITY OF INDUSTRY CA 91749
02113	COILCRAFT INC	1102 SILVER LAKE RD	CARY IL 60013
02114	AMPEREX ELECTRONIC CORP FERROXCUBE DIV	5083 KINGS HWY	SAUGERTIES NY 12477
02735	RCA CORP SOLID STATE DIVISION	ROUTE 202	SOMERVILLE NJ 08876
03508	GENERAL ELECTRIC CO SEMI-CONDUCTOR PRODUCTS DEPT	W GENESEE ST	AUBURN NY 13021
04099	CAPCO INC	FORESIGHT INDUSTRIAL PARK P O BOX 2164	GRAND JUNCTION CO 81501
04222	AVX CERAMICS DIV OF AVX CORP	19TH AVE SOUTH P O BOX 867	MYRTLE BEACH SC 29577
04713	MOTOROLA INC SEMICONDUCTOR GROUP	5005 E MCDOWELL RD	PHOENIX AZ 85008
05245	CORCOM INC	2635 N KILDARE AVE	CHICAGO IL 60639
05397	UNION CARBIDE CORP MATERIALS SYSTEMS DIV	11901 MADISON AVE	CLEVELAND OH 44101
07263	FAIRCHILD CAMERA AND INSTRUMENT CORP SEMICONDUCTOR DIV	464 ELLIS ST	MOUNTAIN VIEW CA 94042
07716	TRW INC TRW ELECTRONICS COMPONENTS TRW IRC FIXED RESISTORS/BURLINGTON	2850 MT PLEASANT AVE	BURLINGTON IA 52601
09019	GENERAL ELECTRIC CO SEMI-CONDUCTOR PRODUCTS DEPT OPERATIONAL PLANNING AND CUSTOMER ENGINEERING	ELECTRONICS PARK	SYRACUSE NY 13201
11236	CTS OF BERNE INC	406 PARR ROAD	BERNE IN 46711
12697	CLAROSTAT MFG CO INC	LOWER WASHINGTON ST	DOVER NH 03820
12954	MICROSEMI CORP	8700 E THOMAS RD P O BOX 1390	SCOTTSDALE AZ 85252
12969	UNITRODE CORP	580 PLEASANT ST	WATERTOWN MA 02172
13511	AMPHENOL CADRE DIV BUNKER RAMO CORP		LOS GATOS CA
14193	CAL-R INC	1601 OLYMPIC BLVD	SANTA MONICA CA 90404
14433	ITT SEMICONDUCTORS DIV		WEST PALM BEACH FL
14552	MICRO/SEMICONDUCTOR CORP	2830 S FAIRVIEW ST	SANTA ANA CA 92704
14752	ELECTRO CUBE INC	1710 S DEL MAR AVE	SAN GABRIEL CA 91776
15238	ITT SEMICONDUCTORS A DIVISION OF INTERNATIONAL TELEPHONE AND TELEGRAPH CORP	500 BROADWAY P O BOX 168	LAWRENCE MA 01841
15454	AMETEK INC RODAN DIV	2905 BLUE STAR ST	ANAHEIM CA 92806
15636	ELEC-TROL INC	26477 N GOLDEN VALLEY RD	SAUGUS CA 91350
17856	SILICONIX INC	2201 LAURELWOOD RD	SANTA CLARA CA 95054
18324	SIGNETICS CORP	811 E ARQUES	SUNNYVALE CA 94086
19396	ILLINOIS TOOL WORKS INC PAKTRON DIVISION	900 FOLLIN LANE S E	VIENNA VA 22180
19647	CADDOCK ELECTRONICS INC	3127 CHICAGO AVE	RIVERSIDE CA 92507
19701	MEPCO/ELECTRA INC A NORTH AMERICAN PHILIPS CO	P O BOX 760	MINERAL WELLS TX 76067
20932	KYOCERA INC	11620 SORRENTO VALLEY RD	SAN DIEGO CA 92121
22526	DU PONT E I DE NEMOURS AND CO INC DU PONT CONNECTOR SYSTEMS	30 HUNTER LANE	CAMP HILL PA 17011
24355	ANALOG DEVICES INC	RT 1 INDUSTRIAL PK P O BOX 280	NORWOOD MA 02062
24546	CORNING GLASS WORKS	550 HIGH ST	BRADFORD PA 16701
25403	AMPEREX ELECTRONIC CORP SEMICONDUCTOR AND MICROCIRCUITS DIV	PROVIDENCE PIKE	SLATERSVILLE RI 02876
27014	NATIONAL SEMICONDUCTOR CORP	2900 SEMICONDUCTOR DR	SANTA CLARA CA 95051

CROSS INDEX - MFR. CODE NUMBER TO MANUFACTURER

Mfr. Code	Manufacturer	Address	City, State, Zip Code
32997	BOURNS INC TRIMPOT DIV	1200 COLUMBIA AVE	RIVERSIDE CA 92507
34630	K AND L/QUARTZTEK INC	3940 N MONTECITO	PHOENIX AZ 85019
34899	FAIR-RITE PRODUCTS CORP	1 COMMERCIAL ROW	WALLKILL NY 12589
50157	MIDWEST COMPONENTS INC	1981 PORT CITY BLVD P O BOX 787	MUSKEGON MI 49443
50434	HEWLETT-PACKARD CO OPTOELECTRONICS DIV	640 PAGE MILL RD	PALO ALTO CA 94304
51406	MURATA ERIE NORTH AMERICA INC GEORGIA OPERATIONS	1148 FRANKLIN RD SE	MARIETTA GA 30067
51642	CENTRE ENGINEERING INC	2820 E COLLEGE AVE	STATE COLLEGE PA 16801
52063	EXAR INTEGRATED SYSTEMS	750 PALOMAR AVE P O BOX 62229	SUNNYVALE CA 94088
52763	STETTNER ELECTRONICS INC	6135 AIRWAYS BLVD PO BOX 21947	CHATTANOOGA TN 37421
52769	SPRAGUE-GOODMAN ELECTRONICS INC	134 FULTON AVE	GARDEN CITY PARK NY 11040
54473	MATSUSHITA ELECTRIC CORP OF AMERICA	ONE PANASONIC WAY	SECAUCUS NJ 07094
54583	TDK ELECTRONICS CORP	755 EASTGATE BLVD	GARDEN CITY NY 11530
54937	DEYOUNG MFG INC	1517 130TH AVE NE P O BOX 1806	BELLEVUE WA 98009
55112	NESTLAKE CAPACITORS INC	5334 STERLING CENTER DRIVE	NESTLAKE VILLAGE CA 91361
55680	NICHICON /AMERICA/ CORP	927 E STATE PKY	SCHAUMBURG IL 60195
56289	SPRAGUE ELECTRIC CO	87 MARSHALL ST	NORTH ADAMS MA 01247
57668	ROHM CORP	16931 MILLIKEN AVE	IRVINE CA 92713
58361	GENERAL INSTRUMENT CORP OPTOELECTRONICS DIV	3400 HILLVIEW AVE	PALO ALTO CA 94304
59660	TUSONIX INC	2155 N FORBES BLVD	TUCSON, ARIZONA 85705
59821	CENTRALAB INC SUB NORTH AMERICAN PHILIPS CORP	7158 MERCHANT AVE	EL PASO TX 79915
71400	BUSSMANN MFG CO MCGRAW EDISION CO	114 OLD STATE RD PO BOX 14460	ST LOUIS MO 63178
71590	GLOBE-UNION INC CENTRALAB ELECTRONICS DIV	HWY 20 W P O BOX 858	FORT DODGE IA 50501
75042	TRW INC TRW ELECTRONIC COMPONENTS IRC FIXED RESISTORS PHILADELPHIA DIV	401 N BROAD ST	PHILADELPHIA PA 19108
80009	TEKTRONIX INC	4900 S W GRIFFITH DR P O BOX 500	BEAVERTON OR 97077
81073	GRAYHILL INC	561 HILLGROVE AVE P O BOX 373	LA GRANGE IL 60525
82104	STANDARD GRIGSBY CO., DIV. OF SUN CHEMICAL CORPORATION	920 RATHBONE AVENUE	AURORA, IL 60507
82389	SWITCHCRAFT INC SUB OF RAYTHEON CO	5555 N ELSTRON AVE	CHICAGO IL 60630
91637	DALE ELECTRONICS INC	P O BOX 609	COLUMBUS NE 68601
96733	SAN FERNANDO ELECTRIC MFG CO	1501 FIRST ST	SAN FERNANDO CA 91341
05243	ROEDERSTEIN E SPEZIALFABRIK FUER KONDENSATOREN GMBH	LUDWILLASTRASSE 23-25	8300 LANDSHUT GERMANY
TK0146	BUEHLER PRODUCTS INC	PO BOX A, HIGHWAY 70	EAST KINSTON NC 28501
TK0213	TOPTRON CORP	TOKYO	JAPAN
TK0510	PANASONIC COMPANY DIV OF MATSUSHITA ELECTRIC CORP	ONE PANASONIC WAY	SECAUCUS NJ 07094
TK0515	RIFA WORLD PRODUCTS INC	19678 8TH STREET EAST P O BOX 517	SONOMA CA 95476
TK1269	NORITAKE ELECTRONICS INC LOS ANGELES OFFICE	22410 HAWTHORNE BLVD	TORRANCE CA 90505
TK1395	ROEDERSTEIN ELECTRONICS INC	2100 WEST FRONT ST P O BOX 5588	STATESVILLE NC 28677
TK1421	COILTRON	PO BOX 904	BEAVERTON OR 97075
TK1450	TOKYO COSMOS ELECTRIC CO LTD	2-268 SOBUDAI ZAMA	KANAGAWA 228 JAPAN
TK1483	TEKA PRODUCTS INC	45 SALEM ST	PROVIDENCE RI 02907
TK1727	PHILIPS NEDERLAND BV AFD ELONCO	POSTBUS 90050	5600 PB EINDHOVEN THE NETHERLANDS
TK2042	ZWAN & ASSOCIATES	7633 SO. 180TH	KENT, WA 98032

Component No.	Tektronix Part No.	Serial/Assembly No. Effective	Dscont	Name & Description	Mfr. Code	Mfr. Part No.
A1	670-7571-00	B010100	B012239	CIRCUIT BD ASSY:MAIN	80009	670-7571-00
A1	670-7571-01	B012240	B012999	CIRCUIT BD ASSY:MAIN	80009	670-7571-01
A1	670-7571-02	B013000	B013299	CIRCUIT BD ASSY:MAIN	80009	670-7571-02
A1	670-7571-03	B013300	B013489	CIRCUIT BD ASSY:MAIN	80009	670-7571-03
A1	670-7571-05	B013490	B014174	CIRCUIT BD ASSY:MAIN	80009	670-7571-05
A1	670-7571-06	B014175	B014885	CIRCUIT BD ASSY:MAIN	80009	670-7571-06
A1	670-7571-07	B014886	B016052	CIRCUIT BD ASSY:MAIN	80009	670-7571-07
A1	670-7571-09	B016053	B019719	CIRCUIT BD ASSY:MAIN	80009	670-7571-09
A1	670-7571-10	B019720	B022266	CIRCUIT BD ASSY:MAIN	80009	670-7571-10
A1	670-7571-11	B022267		CIRCUIT BD ASSY:MAIN	80009	670-7571-11
A2	670-7570-00	B010100	B012999	CIRCUIT BD ASSY:ATTEN	80009	670-7570-00
A2	670-7570-01	B013000	B014412	CIRCUIT BD ASSY:ATTEN	80009	670-7570-01
A2	670-7570-02	B014413	B016156	CIRCUIT BD ASSY:ATTENUATOR	80009	670-7570-02
A2	670-7570-03	B016157	B018643	CIRCUIT BD ASSY:ATTENUATOR	80009	670-7570-03
A2	670-7570-04	B018644		CIRCUIT BD ASSY:ATTENUATOR	80009	670-7570-04
A3	670-7574-00	B010100	B012248	CIRCUIT BD ASSY:FRONT PANEL	80009	670-7574-00
A3	670-7574-01	B012249	B012999	CIRCUIT BD ASSY:FRONT PANEL	80009	670-7574-01
A3	670-7574-02	B013000	B013489	CIRCUIT BD ASSY:FRONT PANEL	80009	670-7574-02
A3	670-7574-04	B013490	B014174	CIRCUIT BD ASSY:FRONT PANEL	80009	670-7574-04
A3	670-7574-05	B014175	B014885	CIRCUIT BD ASSY:FRONT PANEL	80009	670-7574-05
A3	670-7574-06	B014886		CIRCUIT BD ASSY:FRONT PANEL	80009	670-7574-06
A4	670-7572-00	B010100	B012239	CIRCUIT BD ASSY:TIMING	80009	670-7572-00
A4	670-7572-01	B012240	B012999	CIRCUIT BD ASSY:TIMING	80009	670-7572-01
A4	670-7572-03	B013000	B014885	CIRCUIT BD ASSY:TIMING	80009	670-7572-03
A4	670-7572-04	B014886		CIRCUIT BD ASSY:TIMING	80009	670-7572-04
A5	670-7573-00	B010100	B012239	CIRCUIT BD ASSY:ALTERNATE SWEEP	80009	670-7573-00
A5	670-7573-01	B012240	B014885	CIRCUIT BD ASSY:ALTERNATE SWP	80009	670-7573-01
A5	670-7573-03	B014886		CIRCUIT BD ASSY:ALTERNATE SWEEP	80009	670-7573-03
A6	670-7615-00			CIRCUIT BD ASSY:EMI FILTER	80009	670-7615-00
A10	670-7421-00	B010100	B013489	CIRCUIT BD ASSY:COUNTER/TIMER/MULTIMETER (STANDARD INSTRUMENT ONLY)	80009	670-7421-00
A10	670-7421-02	B013490	B014069	CIRCUIT BD ASSY:PARTIAL COUNTER (STANDARD INSTRUMENT ONLY)	80009	670-7421-02
A10	670-7421-01	B014070	B018231	CIRCUIT BD ASSY:COUNTER,PARTIAL (STANDARD INSTRUMENT ONLY)	80009	670-7421-01
A10	670-7421-03	B018232		CIRCUIT BD ASSY:COUNTER,PARTIAL (STANDARD INSTRUMENT ONLY)	80009	670-7421-03
A11	672-1139-00	B010100	B013488	CIRCUIT BD ASSY:COUNTER (OPTION 14 ONLY)	80009	672-1139-00
A11	672-1139-01	B013490	B014069	CIRCUIT BD ASSY:COUNTER (OPTION 14 ONLY) (SAME AS A10 EXCEPT AS LISTED)	80009	672-1139-01
A11	672-1139-02	B014070	B018231	CIRCUIT BD ASSY:COUNTER (OPTION 14 ONLY) (SAME AS A10, EXCEPT AS LISTED)	80009	672-1139-02
A11	672-1139-03	B018232		CIRCUIT BD ASSY:COUNTER (OPTION 14 ONLY) (SAME AS A10, EXCEPT AS LISTED)	80009	672-1139-03
A12	670-7422-00	B010100	B012999	CIRCUIT BD ASSY:MULTIMETER CONTROL	80009	670-7422-00
A12	670-7422-01	B013000	B014069	CIRCUIT BD ASSY:MULTIMETER CONTROL	80009	670-7422-01
A12	670-7422-02	B014070	B018231	CIRCUIT BD ASSY:MULTIMETER CONTROL,PARTIAL	80009	670-7422-02
A12	670-7422-03	B018232		CIRCUIT BD ASSY:MULTIMETER CONTROL,PARTIAL	80009	670-7422-03
A13	670-7423-00	B010100	B014069	CIRCUIT BD ASSY:DISPLAY	80009	670-7423-00
A13	670-7423-01	B014070	B018231	CIRCUIT BD ASSY:DISPLAY,PARTIAL	80009	670-7423-01
A13	670-7423-02	B018232		CIRCUIT BD ASSY:DISPLAY,PARTIAL	80009	670-7423-02
A14	670-7434-00			CIRCUIT BD ASSY:HOT SIGNAL SWITCH BOARD	80009	670-7434-00
A15	670-7575-00			CIRCUIT BD ASSY:LOGIC	80009	670-7575-00

Component No.	Tektronix Part No.	Serial/Assembly No. Effective	Dscont	Name & Description	Mfr. Code	Mfr. Part No.
A1	670-7571-00	B010100	B012239	CIRCUIT BD ASSY:MAIN	80009	670-7571-00
A1	670-7571-01	B012240	B012999	CIRCUIT BD ASSY:MAIN	80009	670-7571-01
A1	670-7571-02	B013000	B013299	CIRCUIT BD ASSY:MAIN	80009	670-7571-02
A1	670-7571-03	B013300	B013489	CIRCUIT BD ASSY:MAIN	80009	670-7571-03
A1	670-7571-05	B013490	B014174	CIRCUIT BD ASSY:MAIN	80009	670-7571-05
A1	670-7571-06	B014175	B014885	CIRCUIT BD ASSY:MAIN	80009	670-7571-06
A1	670-7571-07	B014886	B016052	CIRCUIT BD ASSY:MAIN	80009	670-7571-07
A1	670-7571-09	B016053	B019719	CIRCUIT BD ASSY:MAIN	80009	670-7571-09
A1	670-7571-10	B019720	B022266	CIRCUIT BD ASSY:MAIN	80009	670-7571-10
A1	670-7571-11	B022267		CIRCUIT BD ASSY:MAIN	80009	670-7571-11
A1C114	281-0767-00			CAP,FXD,CER DI:330PF,20%,100V	04222	MA106C331MAA
A1C115	281-0767-00			CAP,FXD,CER DI:330PF,20%,100V	04222	MA106C331MAA
A1C116	281-0862-00			CAP,FXD,CER DI:0.001UF,+80-20%,100V	04222	MA101C102MAA
A1C125	281-0772-00			CAP,FXD,CER DI:4700PF,10%,100V	04222	MA201C472KAA
A1C126	283-0114-00	B010100	B019899	CAP,FXD,CER DI:1500PF,5%,200V	59660	805-534-Y5D0152J
A1C126	285-1346-00	B019900		CAP,FXD,PLASTIC:1500PF,100V,5%	55112	185(1500PF)
A1C130	283-0159-00			CAP,FXD,CER DI:18PF,5%,50V	04222	SR155A180JAA
A1C133	281-0785-00			CAP,FXD,CER DI:68PF,10%,100V	04222	MA101A680KAA
A1C164	281-0767-00			CAP,FXD,CER DI:330PF,20%,100V	04222	MA106C331MAA
A1C165	281-0767-00			CAP,FXD,CER DI:330PF,20%,100V	04222	MA106C331MAA
A1C175	281-0772-00			CAP,FXD,CER DI:4700PF,10%,100V	04222	MA201C472KAA
A1C176	283-0114-00	B010100	B019899	CAP,FXD,CER DI:1500PF,5%,200V	59660	805-534-Y5D0152J
A1C176	285-1346-00	B019900		CAP,FXD,PLASTIC:1500PF,100V,5%	55112	185(1500PF)
A1C180	281-0140-00			CAP,VAR,CER DI:5-25PF,100V	59660	518-023A 5-25
A1C198	281-0862-00			CAP,FXD,CER DI:0.001UF,+80-20%,100V	04222	MA101C102MAA
A1C199	281-0862-00	B014175		CAP,FXD,CER DI:0.001UF,+80-20%,100V	04222	MA101C102MAA
A1C200	290-0136-00			CAP,FXD,ELCTLT:2.2UF,20%,20V	05397	T322B225M020AS
A1C201	290-0136-00			CAP,FXD,ELCTLT:2.2UF,20%,20V	05397	T322B225M020AS
A1C204	281-0811-00	B017435		CAP,FXD,CER DI:10PF,10%,100V	04222	MA101A100KAA
A1C210	281-0500-00			CAP,FXD,CER DI:2.2PF,+/-0.5PF,500V	52763	2RDPLZ007 2P20DC
A1C215	281-0862-00			CAP,FXD,CER DI:0.001UF,+80-20%,100V	04222	MA101C102MAA
A1C220	281-0772-00			CAP,FXD,CER DI:4700PF,10%,100V	04222	MA201C472KAA
A1C225	281-0862-00			CAP,FXD,CER DI:0.001UF,+80-20%,100V	04222	MA101C102MAA
A1C226	281-0862-00			CAP,FXD,CER DI:0.001UF,+80-20%,100V	04222	MA101C102MAA
A1C228	283-0665-00			CAP,FXD,MICA DI:190PF,1%,100V	00853	D155F191F0
A1C229	283-0665-00			CAP,FXD,MICA DI:190PF,1%,100V	00853	D155F191F0
A1C237	281-0140-00			CAP,VAR,CER DI:5-25PF,100V	59660	518-023A 5-25
A1C239	281-0776-00			CAP,FXD,CER DI:120PF,5%,100V	20932	401E0100AD121J
A1C240	281-0511-00			CAP,FXD,CER DI:22PF,+/-2.2PF,500V	52763	2RDPLZ007 Z2P0KC
A1C241	281-0777-00			CAP,FXD,CER DI:51PF,5%,100V	04222	MA101A510JAA
A1C242	281-0812-00			CAP,FXD,CER DI:1000PF,10%,100V	04222	MA101C102KAA
A1C250	281-0768-00			CAP,FXD,CER DI:470PF,20%,100V	04222	MA101A471MAA
A1C251	281-0768-00			CAP,FXD,CER DI:470PF,20%,100V	04222	MA101A471MAA
A1C255	281-0862-00			CAP,FXD,CER DI:0.001UF,+80-20%,100V	04222	MA101C102MAA
A1C262	281-0862-00			CAP,FXD,CER DI:0.001UF,+80-20%,100V	04222	MA101C102MAA
A1C274	281-0773-00			CAP,FXD,CER DI:0.01UF,10%,100V	04222	MA201C103KAA
A1C281	281-0775-00			CAP,FXD,CER DI:0.1UF,20%,50V	04222	MA205E104MAA
A1C282	281-0767-00			CAP,FXD,CER DI:330PF,20%,100V	04222	MA106C331MAA
A1C292	290-0776-00			CAP,FXD,ELCTLT:22UF,+50-10 %,10V	55680	ULA1A220TEA
A1C312	281-0893-00			CAP,FXD,CER DI:4.7PF,+/-0.5PF,100V	04222	MA101A4R7DAA
A1C337	281-0893-00			CAP,FXD,CER DI:4.7PF,+/-0.5PF,100V	04222	MA101A4R7DAA
A1C363	281-0862-00			CAP,FXD,CER DI:0.001UF,+80-20%,100V	04222	MA101C102MAA
A1C369	281-0862-00			CAP,FXD,CER DI:0.001UF,+80-20%,100V	04222	MA101C102MAA
A1C381	283-0663-00	B010100	B014885	CAP,FXD,MICA DI:16.8PF,+/0.5PF,500V	00853	D155C16R800
A1C381	283-0637-00	B014886		CAP,FXD,MICA DI:20PF,2.5%,500V	00853	D155E20000
A1C389	281-0773-00			CAP,FXD,CER DI:0.01UF,10%,100V	04222	MA201C103KAA
A1C390	281-0862-00			CAP,FXD,CER DI:0.001UF,+80-20%,100V	04222	MA101C102MAA
A1C392	281-0862-00			CAP,FXD,CER DI:0.001UF,+80-20%,100V	04222	MA101C102MAA
A1C396	283-0203-00			CAP,FXD,CER DI:0.47UF,20%,50V	04222	SR305SC474MAA

Component No.	Tektronix Part No.	Serial/Assembly No. Effective	Descont	Name & Description	Mfr. Code	Mfr. Part No.
A1C397	281-0773-00			CAP,FXD,CER DI:0.01UF,10%,100V	04222	MA201C103KAA
A1C405	281-0773-00			CAP,FXD,CER DI:0.01UF,10%,100V	04222	MA201C103KAA
A1C408	281-0773-00			CAP,FXD,CER DI:0.01UF,10%,100V	04222	MA201C103KAA
A1C414	290-0246-00			CAP,FXD,ELCTLT:3.3UF,10%,15V	12954	D3R3EA15K1
A1C415	290-0246-00			CAP,FXD,ELCTLT:3.3UF,10%,15V	12954	D3R3EA15K1
A1C418	281-0862-00			CAP,FXD,CER DI:0.001UF,+80-20%,100V	04222	MA101C10ZMAA
A1C419	281-0851-00			CAP,FXD,CER DI:180PF,5%,100VDC	04222	MA101A181JAA
A1C420	281-0773-00			CAP,FXD,CER DI:0.01UF,10%,100V	04222	MA201C103KAA
A1C421	281-0773-00			CAP,FXD,CER DI:0.01UF,10%,100V	04222	MA201C103KAA
A1C451	281-0772-00			CAP,FXD,CER DI:4700PF,10%,100V	04222	MA201C472KAA
A1C453	281-0862-00			CAP,FXD,CER DI:0.001UF,+80-20%,100V	04222	MA101C10ZMAA
A1C454	281-0775-00	B016053		CAP,FXD,CER DI:0.1UF,20%,50V	04222	MA205E104MAA
A1C459	281-0862-00			CAP,FXD,CER DI:0.001UF,+80-20%,100V	04222	MA101C10ZMAA
A1C473	281-0862-00			CAP,FXD,CER DI:0.001UF,+80-20%,100V	04222	MA101C10ZMAA
A1C479	281-0903-00	B012240		CAP,FXD,CER DI:3.9PF,100V	04222	MA101A3R9DAA
A1C480	281-0772-00			CAP,FXD,CER DI:4700PF,10%,100V	04222	MA201C472KAA
A1C494	281-0773-00			CAP,FXD,CER DI:0.01UF,10%,100V	04222	MA201C103KAA
A1C499	281-0773-00			CAP,FXD,CER DI:0.01UF,10%,100V	04222	MA201C103KAA
A1C500	281-0893-00	B010100	B014885	CAP,FXD,CER DI:4.7PF,+/-0.5PF,100V	04222	MA101A4R7DAA
A1C500	281-0903-00	B014886		CAP,FXD,CER DI:3.9PF,100V	04222	MA101A3R9DAA
A1C501	290-0246-00			CAP,FXD,ELCTLT:3.3UF,10%,15V	12954	D3R3EA15K1
A1C502	281-0773-00			CAP,FXD,CER DI:0.01UF,10%,100V	04222	MA201C103KAA
A1C503	281-0775-00			CAP,FXD,CER DI:0.1UF,20%,50V	04222	MA205E104MAA
A1C504	290-0246-00			CAP,FXD,ELCTLT:3.3UF,10%,15V	12954	D3R3EA15K1
A1C505	290-0183-00			CAP,FXD,ELCTLT:1UF,10%,35V	05397	T3228105K035AS
A1C506	281-0772-00			CAP,FXD,CER DI:4700PF,10%,100V	04222	MA201C472KAA
A1C507	290-0776-00			CAP,FXD,ELCTLT:22UF,+50-10 %,10V	55680	ULA1A220TEA
A1C517	281-0772-00			CAP,FXD,CER DI:4700PF,10%,100V	04222	MA201C472KAA
A1C518	281-0852-00			CAP,FXD,CER DI:1800PF,10%,100VDC	04222	MA101C182KAA
A1C519	281-0775-00			CAP,FXD,CER DI:0.1UF,20%,50V	04222	MA205E104MAA

A1C520	290-0246-00			CAP,FXD,ELCTLT:3.3UF,10%,15V	12954	D3R3EA15K1
A1C525	281-0895-00			CAP,FXD,CER DI:6.8PF,100WVDC	04222	MA101A6R8DAA
A1C527	281-0797-00			CAP,FXD,CER DI:15PF,10%,100V	04222	MA106A150KAA
A1C529	281-0763-00			CAP,FXD,CER DI:47PF,10%,100V	04222	MA101A470KAA
A1C531	281-0773-00			CAP,FXD,CER DI:0.01UF,10%,100V	04222	MA201C103KAA
A1C537	281-0775-00			CAP,FXD,CER DI:0.1UF,20%,50V	04222	MA205E104MAA
A1C538	281-0862-00			CAP,FXD,CER DI:0.001UF,+80-20%,100V	04222	MA101C102ZMAA
A1C539	281-0862-00			CAP,FXD,CER DI:0.001UF,+80-20%,100V	04222	MA101C102ZMAA
A1C540	290-0776-00			CAP,FXD,ELCTLT:22UF,+50-10 %,10V	55680	ULA1A220TEA
A1C545	283-0119-00	B010100	B019899	CAP,FXD,CER DI:2200PF,5%,200V	59660	855-XXXY5E0222J
A1C545	285-1345-00	B019900		CAP,FXD,PLASTIC:2200PF,100V,5%	55112	185(2200PF)
A1C547	281-0767-00	B010100	B017539	CAP,FXD,CER DI:330PF,20%,100V	04222	MA106C331MAA
A1C547	281-0864-00	B017540		CAP,FXD,CER DI:430PF,5%,100V	54583	MA12C0G2A431J
A1C553	281-0775-00			CAP,FXD,CER DI:0.1UF,20%,50V	04222	MA205E104MAA
A1C561	281-0862-00			CAP,FXD,CER DI:0.001UF,+80-20%,100V	04222	MA101C102ZMAA
A1C565	281-0768-00			CAP,FXD,CER DI:470PF,20%,100V	04222	MA101A471MAA
A1C590	290-0136-00			CAP,FXD,ELCTLT:2.2UF,20%,20V	05397	T322B225M020AS
A1C603	281-0862-00			CAP,FXD,CER DI:0.001UF,+80-20%,100V	04222	MA101C102ZMAA
A1C635	281-0826-00			CAP,FXD,CER DI:2200PF,5%,100V	20932	401EM100A0222K
A1C647	281-0862-00			CAP,FXD,CER DI:0.001UF,+80-20%,100V	04222	MA101C102ZMAA
A1C648	281-0862-00			CAP,FXD,CER DI:0.001UF,+80-20%,100V	04222	MA101C102ZMAA
A1C649	281-0862-00			CAP,FXD,CER DI:0.001UF,+80-20%,100V	04222	MA101C102ZMAA
A1C673	281-0797-00			CAP,FXD,CER DI:15PF,10%,100V	04222	MA106A150KAA
A1C693	290-0776-00			CAP,FXD,ELCTLT:22UF,+50-10 %,10V	55680	ULA1A220TEA
A1C764	281-0773-00			CAP,FXD,CER DI:0.01UF,10%,100V	04222	MA201C103KAA
A1C770	281-0773-00			CAP,FXD,CER DI:0.01UF,10%,100V	04222	MA201C103KAA
A1C775	281-0214-00			CAP,VAR,CER DI:0.6-3PF,400V	52763	313613-140
A1C777	281-0771-00			CAP,FXD,CER DI:2200PF,220%,200V	04222	MA106E222MAA
A1C779	285-1101-00			CAP,FXD,PLASTIC:0.022UF,10%,200V	19396	223K02PT485

Component No.	Tektronix Part No.	Serial/Assembly No. Effective	Discont	Name & Description	Mfr. Code	Mfr. Part No.
A1C780	281-0775-00			CAP,FXD,CER DI:0.1UF,20%,50V	04222	MA205E104MAA
A1C782	281-0775-00			CAP,FXD,CER DI:0.1UF,20%,50V	04222	MA205E104MAA
A1C785	281-0214-00			CAP,VAR,CER DI:0.6-3PF,400V	52763	313613-140
A1C787	281-0771-00			CAP,FXD,CER DI:2200PF,220%,200V	04222	MA106E222MAA
A1C789	285-1101-00			CAP,FXD,PLASTIC:0.022UF,10%,200V	19396	223K02PT485
A1C796	281-0775-00			CAP,FXD,CER DI:0.1UF,20%,50V	04222	MA205E104MAA
A1C797	281-0775-00			CAP,FXD,CER DI:0.1UF,20%,50V	04222	MA205E104MAA
A1C799	283-0057-00			CAP,FXD,CER DI:0.1UF,+80-20%,200V	04222	SR306E104ZAA
A1C824	281-0785-00			CAP,FXD,CER DI:68PF,10%,100V	04222	MA101A680KAA
A1C825	281-0767-00			CAP,FXD,CER DI:330PF,20%,100V	04222	MA106C331MAA
A1C828	281-0775-00			CAP,FXD,CER DI:0.1UF,20%,50V	04222	MA205E104MAA
A1C832	281-0775-00			CAP,FXD,CER DI:0.1UF,20%,50V	04222	MA205E104MAA
A1C835	281-0775-00			CAP,FXD,CER DI:0.1UF,20%,50V	04222	MA205E104MAA
A1C845	281-0771-00			CAP,FXD,CER DI:2200PF,220%,200V	04222	MA106E222MAA
A1C847	283-0057-00			CAP,FXD,CER DI:0.1UF,+80-20%,200V	04222	SR306E104ZAA
A1C849	283-0057-00			CAP,FXD,CER DI:0.1UF,+80-20%,200V	04222	SR306E104ZAA
A1C851	283-0057-00			CAP,FXD,CER DI:0.1UF,+80-20%,200V	04222	SR306E104ZAA
A1C853	281-0791-00			CAP,FXD,CER DI:270PF,10%,100V	04222	MA101C271KAA
A1C854	283-0279-00			CAP,FXD,CER DI:0.001UF,20%,3000V	51406	DHR12Y5S102M3KV
A1C855	285-1255-00			CAP,FXD,PLASTIC:0.01UF,20%,3KV	56289	430P582
A1C871	283-0057-00			CAP,FXD,CER DI:0.1UF,+80-20%,200V	04222	SR306E104ZAA
A1C873	281-0775-00			CAP,FXD,CER DI:0.1UF,20%,50V	04222	MA205E104MAA
A1C875	281-0775-00			CAP,FXD,CER DI:0.1UF,20%,50V	04222	MA205E104MAA
A1C877	281-0775-00			CAP,FXD,CER DI:0.1UF,20%,50V	04222	MA205E104MAA
A1C879	283-0057-00	B010100	B015570	CAP,FXD,CER DI:0.1UF,+80-20%,200V	04222	SR306E104ZAA
A1C893	283-0279-00			CAP,FXD,CER DI:0.001UF,20%,3000V	51406	DHR12Y5S102M3KV
A1C904	285-1192-00			CAP,FXD,PPR DI:0.0022 UF,20%,250VAC	TK0515	PME271Y510
A1C906	290-0978-00			CAP,FXD,ELCTLT:75UF,+50-10%,450V	56289	17D1149
A1C907	285-0932-00			CAP,FXD,PLASTIC:1UF,10%,400V	04099	C7050105K
A1C908	283-0481-00			CAP,FXD,CER DI:220PF,10%,250VAC	TK1395	RK0611
A1C917	281-0812-00			CAP,FXD,CER DI:1000PF,10%,100V	04222	MA101C102KAA
A1C919	281-0852-00			CAP,FXD,CER DI:1800PF,10%,100VDC	04222	MA101C182KAA
A1C922	281-0775-00			CAP,FXD,CER DI:0.1UF,20%,50V	04222	MA205E104MAA
A1C925	290-0973-00			CAP,FXD,ELCTLT:100UF,20%,25VDC	55680	ULB1E101MEA
A1C940	290-0922-00			CAP,FXD,ELCTLT:1000UF,+50-10%,50V	55680	ULB1E102TFAANA
A1C941	283-0423-00	B010100	B014885	CAP,FXD,CER DI:0.22UF,+80-20%,50V	04222	MD015E224ZAA
A1C941	283-0057-00	B014886		CAP,FXD,CER DI:0.1UF,+80-20%,200V	04222	SR306E104ZAA
A1C942	290-0768-00			CAP,FXD,ELCTLT:10UF,+50-10%,100VDC	54473	ECE-A100V10L
A1C943	290-0768-00			CAP,FXD,ELCTLT:10UF,+50-10%,100VDC	54473	ECE-A100V10L
A1C944	290-0183-00			CAP,FXD,ELCTLT:1UF,10%,35V	05397	T322B105K035AS
A1C945	281-0775-00			CAP,FXD,CER DI:0.1UF,20%,50V	04222	MA205E104MAA
A1C954	290-0947-00			CAP,FXD,ELCTLT:33UF,+50-10%,160V W/SLEEVE	55680	UWC2C330TFA
A1C956	290-0946-00			CAP,FXD,ELCTLT:270UF,+100-10%,40V	00853	301EN271W040B2
A1C960	290-0945-00			CAP,FXD,ELCTLT:840UF 10 + 100 %,12V	00853	301EN841U012B2
A1C961	290-0945-00			CAP,FXD,ELCTLT:840UF 10 + 100 %,12V	00853	301EN841U012B2
A1C962	290-0945-00			CAP,FXD,ELCTLT:840UF 10 + 100 %,12V	00853	301EN841U012B2
A1C963	290-0945-00			CAP,FXD,ELCTLT:840UF 10 + 100 %,12V	00853	301EN841U012B2
A1C965	290-0989-00	B010100	B022266	CAP,FXD,ELCTLT:4700UF,20%,10V	TK0510	ECEA1AS472
A1C965	290-0946-00	B022267		CAP,FXD,ELCTLT:270UF,+100-10%,40V	00853	301EN271W040B2
A1C968	290-0945-00			CAP,FXD,ELCTLT:840UF 10 + 100 %,12V	00853	301EN841U012B2
A1C970	290-0945-00	B010100	B020530	CAP,FXD,ELCTLT:840UF 10 + 100 %,12V	00853	301EN841U012B2
A1C970	290-0989-00	B020531		CAP,FXD,ELCTLT:4700UF,20%,10V	TK0510	ECEA1AS472
A1C975	285-1255-00			CAP,FXD,PLASTIC:0.01UF,20%,3KV	56289	430P582
A1C976	285-1255-00			CAP,FXD,PLASTIC:0.01UF,20%,3KV	56289	430P582
A1C979	285-1255-00			CAP,FXD,PLASTIC:0.01UF,20%,3KV	56289	430P582
A1CR133	152-0141-02			SEMICOND DVC,DI:SM,SI,30V,150MA,30V,DO-35	03508	DA2527 (1N4152)
A1CR183	152-0141-02			SEMICOND DVC,DI:SM,SI,30V,150MA,30V,DO-35	03508	DA2527 (1N4152)
A1CR200	152-0141-02			SEMICOND DVC,DI:SM,SI,30V,150MA,30V,DO-35	03508	DA2527 (1N4152)
A1CR201	152-0141-02			SEMICOND DVC,DI:SM,SI,30V,150MA,30V,DO-35	03508	DA2527 (1N4152)

Component No.	Tektronix Part No.	Serial/Assembly No. Effective	Dscont	Name & Description	Mfr. Code	Mfr. Part No.
A1CR202	152-0141-02			SEMICOND DVC,DI:SM,SI,30V,150MA,30V,DO-35	03508	DA2527 (1N4152)
A1CR203	152-0141-02			SEMICOND DVC,DI:SM,SI,30V,150MA,30V,DO-35	03508	DA2527 (1N4152)
A1CR226	152-0141-02			SEMICOND DVC,DI:SM,SI,30V,150MA,30V,DO-35	03508	DA2527 (1N4152)
A1CR227	152-0141-02			SEMICOND DVC,DI:SM,SI,30V,150MA,30V,DO-35	03508	DA2527 (1N4152)
A1CR228	152-0141-02			SEMICOND DVC,DI:SM,SI,30V,150MA,30V,DO-35	03508	DA2527 (1N4152)
A1CR229	152-0141-02			SEMICOND DVC,DI:SM,SI,30V,150MA,30V,DO-35	03508	DA2527 (1N4152)
A1CR372	152-0141-02			SEMICOND DVC,DI:SM,SI,30V,150MA,30V,DO-35	03508	DA2527 (1N4152)
A1CR381	152-0141-02	B010100	B016633	SEMICOND DVC,DI:SM,SI,30V,150MA,30V,DO-35	03508	DA2527 (1N4152)
A1CR381	152-0245-00	B016634		SEMICOND DVC,DI:SM,SI,40V,DO-7	03508	DA2740
A1CR393	152-0141-02			SEMICOND DVC,DI:SM,SI,30V,150MA,30V,DO-35	03508	DA2527 (1N4152)
A1CR399	152-0141-02			SEMICOND DVC,DI:SM,SI,30V,150MA,30V,DO-35	03508	DA2527 (1N4152)
A1CR414	152-0141-02			SEMICOND DVC,DI:SM,SI,30V,150MA,30V,DO-35	03508	DA2527 (1N4152)
A1CR415	152-0141-02			SEMICOND DVC,DI:SM,SI,30V,150MA,30V,DO-35	03508	DA2527 (1N4152)
A1CR503	152-0075-00			SEMICOND DVC,DI:SM,GE,22V,80MW,DO-7	14433	G866
A1CR508	152-0141-02			SEMICOND DVC,DI:SM,SI,30V,150MA,30V,DO-35	03508	DA2527 (1N4152)
A1CR509	152-0141-02			SEMICOND DVC,DI:SM,SI,30V,150MA,30V,DO-35	03508	DA2527 (1N4152)
A1CR514	152-0141-02			SEMICOND DVC,DI:SM,SI,30V,150MA,30V,DO-35	03508	DA2527 (1N4152)
A1CR518	152-0141-02			SEMICOND DVC,DI:SM,SI,30V,150MA,30V,DO-35	03508	DA2527 (1N4152)
A1CR529	152-0141-02			SEMICOND DVC,DI:SM,SI,30V,150MA,30V,DO-35	03508	DA2527 (1N4152)
A1CR551	152-0141-02			SEMICOND DVC,DI:SM,SI,30V,150MA,30V,DO-35	03508	DA2527 (1N4152)
A1CR556	152-0141-02			SEMICOND DVC,DI:SM,SI,30V,150MA,30V,DO-35	03508	DA2527 (1N4152)
A1CR712	152-0141-02			SEMICOND DVC,DI:SM,SI,30V,150MA,30V,DO-35	03508	DA2527 (1N4152)
A1CR764	152-0141-02			SEMICOND DVC,DI:SM,SI,30V,150MA,30V,DO-35	03508	DA2527 (1N4152)
A1CR765	152-0141-02			SEMICOND DVC,DI:SM,SI,30V,150MA,30V,DO-35	03508	DA2527 (1N4152)
A1CR768	152-0141-02			SEMICOND DVC,DI:SM,SI,30V,150MA,30V,DO-35	03508	DA2527 (1N4152)
A1CR770	152-0141-02			SEMICOND DVC,DI:SM,SI,30V,150MA,30V,DO-35	03508	DA2527 (1N4152)
A1CR780	152-0141-02			SEMICOND DVC,DI:SM,SI,30V,150MA,30V,DO-35	03508	DA2527 (1N4152)
A1CR805	152-0141-02			SEMICOND DVC,DI:SM,SI,30V,150MA,30V,DO-35	03508	DA2527 (1N4152)
A1CR818	152-0141-02			SEMICOND DVC,DI:SM,SI,30V,150MA,30V,DO-35	03508	DA2527 (1N4152)
A1CR820	152-0141-02			SEMICOND DVC,DI:SM,SI,30V,150MA,30V,DO-35	03508	DA2527 (1N4152)
A1CR823	152-0141-02			SEMICOND DVC,DI:SM,SI,30V,150MA,30V,DO-35	03508	DA2527 (1N4152)
A1CR824	152-0141-02			SEMICOND DVC,DI:SM,SI,30V,150MA,30V,DO-35	03508	DA2527 (1N4152)
A1CR825	152-0141-02			SEMICOND DVC,DI:SM,SI,30V,150MA,30V,DO-35	03508	DA2527 (1N4152)
A1CR829	152-0141-02			SEMICOND DVC,DI:SM,SI,30V,150MA,30V,DO-35	03508	DA2527 (1N4152)
A1CR840	152-0141-02			SEMICOND DVC,DI:SM,SI,30V,150MA,30V,DO-35	03508	DA2527 (1N4152)
A1CR845	152-0141-02			SEMICOND DVC,DI:SM,SI,30V,150MA,30V,DO-35	03508	DA2527 (1N4152)
A1CR851	152-0242-00			SEMICOND DVC,DI:SIG,SI,225V,0.2A,DO-7	07263	FDH5004
A1CR853	152-0242-00			SEMICOND DVC,DI:SIG,SI,225V,0.2A,DO-7	07263	FDH5004
A1CR854	152-0242-00			SEMICOND DVC,DI:SI6,SI,225V,0.2A,DO-7	07263	FDH5004
A1CR855	152-0242-00			SEMICOND DVC,DI:SIG,SI,225V,0.2A,DO-7	07263	FDH5004
A1CR879	152-0413-00	B010100	B015570	SEMICOND DVC,DI:RECT,SI,400V,1.0A,A59	04713	SR2046KRL
A1CR901	152-0040-00			SEMICOND DVC,DI:RECT,SI,600V,1A,DO-41	80009	152-0040-00
A1CR902	152-0040-00			SEMICOND DVC,DI:RECT,SI,600V,1A,DO-41	80009	152-0040-00
A1CR903	152-0040-00			SEMICOND DVC,DI:RECT,SI,600V,1A,DO-41	80009	152-0040-00
A1CR904	152-0040-00			SEMICOND DVC,DI:RECT,SI,600V,1A,DO-41	80009	152-0040-00
A1CR907	152-0808-00			SEMICOND DVC,DI:RECTIFIER,SI,400V,1.5 AMP	01281	DSR3400X
A1CR908	152-0141-02			SEMICOND DVC,DI:SM,SI,30V,150MA,30V,DO-35	03508	DA2527 (1N4152)
A1CR920	152-0061-00			SEMICOND DVC,DI:SM,SI,175V,0.1A,DO-35	07263	FDH2161
A1CR945	152-0141-02	B010100	B012999	SEMICOND DVC,DI:SM,SI,30V,150MA,30V,DO-35	03508	DA2527 (1N4152)
A1CR946	152-0414-00			SEMICOND DVC,DI:RECT,SI,200V,1.0A,TEK A59	04713	SR2069RL
A1CR947	152-0414-00			SEMICOND DVC,DI:RECT,SI,200V,1.0A,TEK A59	04713	SR2069RL
A1CR954	152-0413-00			SEMICOND DVC,DI:RECT,SI,400V,1.0A,A59	04713	SR2046KRL
A1CR955	152-0413-00			SEMICOND DVC,DI:RECT,SI,400V,1.0A,A59	04713	SR2046KRL
A1CR956	152-0414-00			SEMICOND DVC,DI:RECT,SI,200V,1.0A,TEK A59	04713	SR2069RL
A1CR957	152-0414-00			SEMICOND DVC,DI:RECT,SI,200V,1.0A,TEK A59	04713	SR2069RL
A1CR960	152-0414-00			SEMICOND DVC,DI:RECT,SI,200V,1.0A,TEK A59	04713	SR2069RL
A1CR961	152-0414-00			SEMICOND DVC,DI:RECT,SI,200V,1.0A,TEK A59	04713	SR2069RL
A1CR962	152-0414-00			SEMICOND DVC,DI:RECT,SI,200V,1.0A,TEK A59	04713	SR2069RL
A1CR963	152-0414-00			SEMICOND DVC,DI:RECT,SI,200V,1.0A,TEK A59	04713	SR2069RL

Component No.	Tektronix Part No.	Serial/Assembly No. Effective	Dscont	Name & Description	Mfr. Code	Mfr. Part No.
A1CR965	152-0414-00			SEMICOND DVC,DI:RECT,SI,200V,1.0A,TEK A59	04713	SR2069RL
A1CR967	152-0581-00			SEMICOND DVC,DI:RECT,SI,20V,1A,A59	04713	1N5817
A1CR970	152-0581-00			SEMICOND DVC,DI:RECT,SI,20V,1A,A59	04713	1N5817
A1DS856	150-0035-00			LAMP,GLOW:90V MAX,0.3MA,AIO-T,WIRE LD	TK0213	JH005/3011JA
A1DS858	150-0035-00			LAMP,GLOW:90V MAX,0.3MA,AIO-T,WIRE LD	TK0213	JH005/3011JA
A1DS870	150-0035-00			LAMP,GLOW:90V MAX,0.3MA,AID-T,WIRE LD	TK0213	JH005/3011JA
A1DS9150	150-1071-00			LT EMITTING DIO:GREEN,565NM,20MA MAX	50434	HLMP3910
A1E200	276-0752-00			CORE,EM:FERRITE	34899	2743001111
A1E201	276-0752-00			CORE,EM:FERRITE	34899	2743001111
A1E272	276-0532-00			SHLD BEAD,ELEK:FERRITE	02114	56-590-65/4A6
A1E590	276-0752-00			CORE,EM:FERRITE	34899	2743001111
A1E907	276-0635-00			CORE,EM:TOROID,FERRITE	02114	768 T188/3E2A
A1L142	108-0420-00			COIL,RF:FIXED,35NH,15%	TK2042	ORDER BY DESCR
A1L143	108-0420-00			COIL,RF:FIXED,35NH,15%	TK2042	ORDER BY DESCR
A1L192	108-0420-00			COIL,RF:FIXED,35NH,15%	TK2042	ORDER BY DESCR
A1L193	108-0420-00			COIL,RF:FIXED,35NH,15%	TK2042	ORDER BY DESCR
A1L960	108-1058-00			COIL,RF:FIXED,10UH	02113	B8724
A1L961	108-1058-00			COIL,RF:FIXED,10UH	02113	B8724
A1L968	108-1058-00			COIL,RF:FIXED,10UH	02113	B8724
A1L9272	119-1505-01			DEFL LEAD ASSY:CAP/RES/ELEC LEAD,2.0 L	80009	119-1505-01
A1L9273	119-1506-01			DEFL LEAD ASSY:CAP/RES/ELEC LEAD,2.5 L	80009	119-1506-01
A1P2300	131-0608-00	B010100	B019899	TERMINAL,PIN:0.365 L X 0.025 BRZ GLD PL (QUANTITY OF 5)	22526	48283-036
A1P2300	131-0787-00	B019900		TERMINAL,PIN:0.64 L X 0.025 SQ PH BRZ (QUANTITY OF 5)	22526	47359-000
A1P2400	131-0589-00	B010100	B019899	TERMINAL,PIN:0.46 L X 0.025 SQ PH BRZ (QUANTITY OF 5)	22526	48283-029
A1P2400	131-0787-00	B019900		TERMINAL,PIN:0.64 L X 0.025 SQ PH BRZ (QUANTITY OF 5)	22526	47359-000
A1P2500	131-0787-00			TERMINAL,PIN:0.64 L X 0.025 SQ PH BRZ (QUANTITY OF 2)	22526	47359-000
A1P2600	131-0608-00	B010100	B014885	TERMINAL,PIN:0.365 L X 0.025 BRZ GLD PL (QUANTITY OF 2)	22526	48283-036
A1P2600	131-0787-00	B014886		TERMINAL,PIN:0.64 L X 0.025 SQ PH BRZ (QUANTITY OF 2)	22526	47359-000
A1P2700	131-0589-00	B010100	B019899	TERMINAL,PIN:0.46 L X 0.025 SQ PH BRZ (QUANTITY OF 3)	22526	48283-029
A1P2700	131-0787-00	B019900		TERMINAL,PIN:0.64 L X 0.025 SQ PH BRZ (QUANTITY OF 3)	22526	47359-000
A1P2850	131-0608-00	B010100	B014885	TERMINAL,PIN:0.365 L X 0.025 BRZ GLD PL	22526	48283-036
A1P2850	131-0787-00	B014886		TERMINAL,PIN:0.64 L X 0.025 SQ PH BRZ	22526	47359-000
A1P9644	131-0608-00	B010100	B019899	TERMINAL,PIN:0.365 L X 0.025 BRZ GLD PL (QUANTITY OF 3)	22526	48283-036
A1P9644	131-0787-00	B019900		TERMINAL,PIN:0.64 L X 0.025 SQ PH BRZ (QUANTITY OF 3)	22526	47359-000
A1P9802	131-0589-00	B010100	B019899	TERMINAL,PIN:0.46 L X 0.025 SQ PH BRZ (QUANTITY OF 5)	22526	48283-029
A1P9802	131-0787-00	B019900		TERMINAL,PIN:0.64 L X 0.025 SQ PH BRZ (QUANTITY OF 5)	22526	47359-000
A1P9965	131-0608-00	B010100	B019719	TERMINAL,PIN:0.365 L X 0.025 BRZ GLD PL (QUANTITY OF 2)	22526	48283-036
A1Q102	151-0712-00			TRANSISTOR:PNP,SI,TO-92	04713	SPS8223
A1Q113	151-0712-00			TRANSISTOR:PNP,SI,TO-92	04713	SPS8223
A1Q114	151-0190-00			TRANSISTOR:NPN,SI,TO-92	80009	151-0190-00
A1Q115	151-0190-00			TRANSISTOR:NPN,SI,TO-92	80009	151-0190-00
A1Q152	151-0712-00			TRANSISTOR:PNP,SI,TO-92	04713	SPS8223
A1Q153	151-0712-00			TRANSISTOR:PNP,SI,TO-92	04713	SPS8223
A1Q164	151-0190-00			TRANSISTOR:NPN,SI,TO-92	80009	151-0190-00
A1Q169	151-0190-00			TRANSISTOR:NPN,SI,TO-92	80009	151-0190-00
A1Q202	151-0212-00			TRANSISTOR:NPN,SI,TO-72	04713	SRF 518
A1Q203	151-0212-00			TRANSISTOR:NPN,SI,TO-72	04713	SRF 518

Component No.	Tektronix Part No.	Serial/Assembly No. Effective	Dscont	Name & Description	Mfr. Code	Mfr. Part No.
A10206	151-0369-00			TRANSISTOR:PNP,SI,X-55	04713	SPS8273
A10207	151-0369-00			TRANSISTOR:PNP,SI,X-55	04713	SPS8273
A10230	151-0271-00			TRANSISTOR:PNP,SI,TO-92	04713	SPS8236
A10231	151-0271-00			TRANSISTOR:PNP,SI,TO-92	04713	SPS8236
A10254	151-0752-00	B010100	B017648	TRANSISTOR:NPN,SI,MARCO T	25403	BFR96
A10254	151-0752-01	B017649		TRANSISTOR:NPN,SI,MARCO T	04713	SRF3188
A10255	151-0752-00	B010100	B017648	TRANSISTOR:NPN,SI,MARCO T	25403	BFR96
A10255	151-0752-01	B017649		TRANSISTOR:NPN,SI,MARCO T	04713	SRF3188
A10256	151-0752-00			TRANSISTOR:NPN,SI,MARCO T	25403	BFR96
A10257	151-0752-00			TRANSISTOR:NPN,SI,MARCO T	25403	BFR96
A10283	151-0736-00			TRANSISTOR:NPN,SI,TO-92	80009	151-0736-00
A10284	151-0712-00			TRANSISTOR:PNP,SI,TO-92	04713	SPS8223
A10285	151-0712-00			TRANSISTOR:PNP,SI,TO-92	04713	SPS8223
A10302	151-0711-01			TRANSISTOR:NPN,SI,TO-92	04713	SPS8608M
A10303	151-0711-01			TRANSISTOR:NPN,SI,TO-92	04713	SPS8608M
A10327	151-0711-01			TRANSISTOR:NPN,SI,TO-92	04713	SPS8608M
A10328	151-0711-01			TRANSISTOR:NPN,SI,TO-92	04713	SPS8608M
A10382	151-1042-00			SEMICOND DVC SE:FET,SI,TO-92	04713	SPF627M2
A10384	151-0711-00			TRANSISTOR:NPN,SI,TO-92	80009	151-0711-00
A10397	151-0190-00			TRANSISTOR:NPN,SI,TO-92	80009	151-0190-00
A10402	151-0276-00			TRANSISTOR:PNP,SI,TO-92	04713	SPS8025
A10403	151-0276-00			TRANSISTOR:PNP,SI,TO-92	04713	SPS8025
A10413	151-0190-00			TRANSISTOR:NPN,SI,TO-92	80009	151-0190-00
A10419	151-0711-00			TRANSISTOR:NPN,SI,TO-92	80009	151-0711-00
A10420	151-0711-00			TRANSISTOR:NPN,SI,TO-92	80009	151-0711-00
A10421	151-0712-00			TRANSISTOR:PNP,SI,TO-92	04713	SPS8223
A10422	151-0199-00			TRANSISTOR:PNP,SI,TO-92	27014	ST65057
A10423	151-0424-00			TRANSISTOR:NPN,SI,TO-92F	04713	SPS8246
A10428	151-0711-00			TRANSISTOR:NPN,SI,TO-92	80009	151-0711-00
A10429	151-0712-00			TRANSISTOR:PNP,SI,TO-92	04713	SPS8223
A10440	151-0711-00			TRANSISTOR:NPN,SI,TO-92	80009	151-0711-00
A10441	151-0711-00			TRANSISTOR:NPN,SI,TO-92	80009	151-0711-00
A10460	151-0712-00			TRANSISTOR:PNP,SI,TO-92	04713	SPS8223
A10463	151-0712-00			TRANSISTOR:PNP,SI,TO-92	04713	SPS8223
A10509	151-0188-00			TRANSISTOR:PNP,SI,TO-92	80009	151-0188-00
A10511	151-0188-00			TRANSISTOR:PNP,SI,TO-92	80009	151-0188-00
A10525	151-0190-00			TRANSISTOR:NPN,SI,TO-92	80009	151-0190-00
A10576	151-0199-00			TRANSISTOR:PNP,SI,TO-92	27014	ST65057
A10578	151-0199-00			TRANSISTOR:PNP,SI,TO-92	27014	ST65057
A10583	151-0198-00			TRANSISTOR:SELECTED	04713	SPS8802-1
A10586	151-0198-00			TRANSISTOR:SELECTED	04713	SPS8802-1
A10756	151-0190-00	B010100	B012999	TRANSISTOR:NPN,SI,TO-92	80009	151-0190-00
A10756	151-0432-00	B013000		TRANSISTOR:NPN,SI,TO-106	04713	SPS8512
A10770	151-0188-00			TRANSISTOR:PNP,SI,TO-92	80009	151-0188-00
A10775	151-0347-00			TRANSISTOR:NPN,SI,TO-92	04713	SPS7951
A10779	151-0350-00			TRANSISTOR:PNP,SI,TO-92	04713	SPS6700
A10780	151-0190-00			TRANSISTOR:NPN,SI,TO-92	80009	151-0190-00
A10785	151-0347-00			TRANSISTOR:NPN,SI,TO-92	04713	SPS7951
A10789	151-0350-00			TRANSISTOR:PNP,SI,TO-92	04713	SPS6700
A10804	151-0188-00			TRANSISTOR:PNP,SI,TO-92	80009	151-0188-00
A10814	151-0188-00			TRANSISTOR:PNP,SI,TO-92	80009	151-0188-00
A10825	151-0424-00			TRANSISTOR:NPN,SI,TO-92F	04713	SPS8246
A10829	151-0199-00			TRANSISTOR:PNP,SI,TO-92	27014	ST65057
A10835	151-0199-00			TRANSISTOR:PNP,SI,TO-92	27014	ST65057
A10840	151-0347-00			TRANSISTOR:NPN,SI,TO-92	04713	SPS7951
A10845	151-0350-00			TRANSISTOR:PNP,SI,TO-92	04713	SPS6700
A10885	151-0443-00			TRANSISTOR:PNP,SI,TO-92	04713	SPS7950
A10908	151-0164-00			TRANSISTOR:PNP,SI,TO-92	04713	2N2907A
A10928	151-0432-00			TRANSISTOR:NPN,SI,TO-106	04713	SPS8512

Component No.	Tektronix Part No.	Serial/Assembly No. Effective	Dscont	Name & Description	Mfr. Code	Mfr. Part No.
A1Q930	151-0164-00			TRANSISTOR:PNP,SI,TO-92	04713	2N2907A
A1Q935	151-0506-00			SCR:SI,RD-44	80009	151-0506-00
A1Q938	151-0276-00			TRANSISTOR:PNP,SI,TO-92	04713	SPS8025
A1Q939	151-0276-00			TRANSISTOR:PNP,SI,TO-92	04713	SPS8025
A1Q944	151-0432-00			TRANSISTOR:NPN,SI,TO-106	04713	SPS8512
A1Q946	151-0476-02			TRANSISTOR:SELECTED	04713	SJE389
A1Q947	151-0476-02			TRANSISTOR:SELECTED	04713	SJE389
A1R100	315-0430-00			RES,FXD,FILM:43 OHM,5%,0.25M	19701	5043CX43R00J
A1R101	315-0430-00			RES,FXD,FILM:43 OHM,5%,0.25M	19701	5043CX43R00J
A1R102	321-0155-00			RES,FXD,FILM:402 OHM,1%,0.125M,TC=T0	07716	CEAD402R0F
A1R103	321-0155-00			RES,FXD,FILM:402 OHM,1%,0.125M,TC=T0	07716	CEAD402R0F
A1R104	321-0101-00			RES,FXD,FILM:110 OHM,1%,0.125M,TC=T0	07716	CEAD110R0F
A1R105	321-0101-00			RES,FXD,FILM:110 OHM,1%,0.125M,TC=T0	07716	CEAD110R0F
A1R106	321-0161-00			RES,FXD,FILM:464 OHM,1%,0.125M,TC=T0	07716	CEAD464R0F
A1R108	321-0223-00			RES,FXD,FILM:2.05K OHM,1%,0.125M,TC=T0	80009	321-0223-00
A1R109	321-0221-00			RES,FXD,FILM:1.96K OHM,1%,0.125M,TC=T0	19701	5043ED1K960F
A1R114	321-0225-00			RES,FXD,FILM:2.15K OHM,1%,0.125M,TC=T0	19701	5033ED2K15F
A1R115	321-0225-00			RES,FXD,FILM:2.15K OHM,1%,0.125M,TC=T0	19701	5033ED2K15F
A1R116	315-0272-00			RES,FXD,FILM:2.7K OHM,5%,0.25M	57668	NTR25J-E02K7
A1R120	321-0123-00			RES,FXD,FILM:187 OHM,1%,0.125M, TC=T0	07716	CEAD187R0F
A1R121	321-0123-00			RES,FXD,FILM:187 OHM,1%,0.125M, TC=T0	07716	CEAD187R0F
A1R122	315-0750-00	B010100	B010684	RES,FXD,FILM:75 OHM,5%,0.25M	57668	NTR25J-E75E0
A1R122	315-0820-00	B010685		RES,FXD,FILM:82 OHM,5%,0.25M	57668	NTR25J-E82E0
A1R125	315-0242-00			RES,FXD,FILM:2.4K OHM,5%,0.25M	57668	NTR25J-E02K4
A1R126	315-0182-00			RES,FXD,FILM:1.8K OHM,5%,0.25M	57668	NTR25J-E1K8
A1R130	315-0510-00			RES,FXD,FILM:51 OHM,5%,0.25M	19701	5043CX51R00J
A1R131	315-0510-00			RES,FXD,FILM:51 OHM,5%,0.25M	19701	5043CX51R00J
A1R132	315-0511-00			RES,FXD,FILM:510 OHM,5%,0.25M	19701	5043CX510R0J
A1R133	315-0111-00			RES,FXD,FILM:110 OHM,5%,0.25M	57668	NTR25J-E110E
A1R135	315-0101-00			RES,FXD,FILM:100 OHM,5%,0.25M	57668	NTR25J-E 100E

A1R136	315-0101-00			RES,FXD,FILM:100 OHM,5%,0.25W	57668	NTR25J-E 100E
A1R138	315-0182-00			RES,FXD,FILM:1.8K OHM,5%,0.25W	57668	NTR25J-E1K8
A1R139	315-0302-00			RES,FXD,FILM:3K OHM,5%,0.25W	57668	NTR25J-E03K0
A1R142	315-0101-00			RES,FXD,FILM:100 OHM,5%,0.25W	57668	NTR25J-E 100E
A1R143	315-0101-00			RES,FXD,FILM:100 OHM,5%,0.25W	57668	NTR25J-E 100E
A1R144	315-0511-00	B010100	B012239	RES,FXD,FILM:510 OHM,5%,0.25W	19701	5043CX510R0J
A1R144	315-0471-00	B012240		RES,FXD,FILM:470 OHM,5%,0.25W	57668	NTR25J-E470E
A1R145	311-1238-00			RES,VAR,NONWW:TRMR,5K OHM,0.5W	32997	3386X-DY6-502
A1R150	315-0430-00			RES,FXD,FILM:43 OHM,5%,0.25W	19701	5043CX43R00J
A1R151	315-0430-00			RES,FXD,FILM:43 OHM,5%,0.25W	19701	5043CX43R00J
A1R152	321-0155-00			RES,FXD,FILM:402 OHM,1%,0.125W,TC=T0	07716	CEAD402R0F
A1R153	321-0155-00			RES,FXD,FILM:402 OHM,1%,0.125W,TC=T0	07716	CEAD402R0F
A1R154	321-0101-00			RES,FXD,FILM:110 OHM,1%,0.125W,TC=T0	07716	CEAD110R0F
A1R155	321-0101-00			RES,FXD,FILM:110 OHM,1%,0.125W,TC=T0	07716	CEAD110R0F
A1R156	321-0161-00			RES,FXD,FILM:464 OHM,1%,0.125W,TC=T0	07716	CEAD464R0F
A1R158	321-0223-00			RES,FXD,FILM:2.05K OHM,1%,0.125W,TC=T0	80009	321-0223-00
A1R159	321-0221-00			RES,FXD,FILM:1.96K OHM,1%,0.125W,TC=T0	19701	5043ED1K960F
A1R164	321-0225-00			RES,FXD,FILM:2.15K OHM,1%,0.125W,TC=T0	19701	5033ED2K15F
A1R165	321-0225-00			RES,FXD,FILM:2.15K OHM,1%,0.125W,TC=T0	19701	5033ED2K15F
A1R166	315-0272-00			RES,FXD,FILM:2.7K OHM,5%,0.25W	57668	NTR25J-E02K7
A1R170	321-0123-00			RES,FXD,FILM:187 OHM,1%,0.125W, TC=T0	07716	CEAD187R0F
A1R171	321-0123-00			RES,FXD,FILM:187 OHM,1%,0.125W, TC=T0	07716	CEAD187R0F
A1R172	315-0750-00	B010100	B010684	RES,FXD,FILM:75 OHM,5%,0.25W	57668	NTR25J-E75E0
A1R172	315-0820-00	B010685		RES,FXD,FILM:82 OHM,5%,0.25W	57668	NTR25J-E82E0
A1R175	315-0242-00			RES,FXD,FILM:2.4K OHM,5%,0.25W	57668	NTR25J-E02K4
A1R176	315-0182-00			RES,FXD,FILM:1.8K OHM,5%,0.25W	57668	NTR25J-E1K8
A1R180	315-0510-00			RES,FXD,FILM:51 OHM,5%,0.25W	19701	5043CX51R00J
A1R181	315-0510-00			RES,FXD,FILM:51 OHM,5%,0.25W	19701	5043CX51R00J
A1R182	315-0511-00			RES,FXD,FILM:510 OHM,5%,0.25W	19701	5043CX510R0J

A1R227	315-0221-00			RES,FXD,FILM:220 OHM,5%,0.25W	57668	NTR25J-E220E
A1R230	321-0086-00			RES,FXD,FILM:76.8 OHM,1%,0.125W,TC=T0	91637	CMF55116G76R80F
A1R231	321-0086-00			RES,FXD,FILM:76.8 OHM,1%,0.125W,TC=T0	91637	CMF55116G76R80F
A1R233	321-0085-00	B010100	B012239	RES,FXD,FILM:75 OHM,1%,0.125W,TC=T0	57668	CRB14FXE 75 OHM
A1R233	315-0821-00	B012240		RES,FXD,FILM:820 OHM,5%,0.25W	19701	5043CX820R0J
A1R234	315-0360-00			RES,FXD,FILM:36 OHM,5%,0.25W	19701	5043CX36R00J
A1R235	315-0360-00			RES,FXD,FILM:36 OHM,5%,0.25W	19701	5043CX36R00J
A1R236	315-0751-00	B010100	B012239	RES,FXD,FILM:750 OHM,5%,0.25W	57668	NTR25J-E750E
A1R236	315-0821-00	B012240		RES,FXD,FILM:820 OHM,5%,0.25W	19701	5043CX820R0J
A1R239	315-0242-00			RES,FXD,FILM:2.4K OHM,5%,0.25W	57668	NTR25J-E02K4
A1R240	311-1248-00			RES,VAR,NONWW:TRMR,500 OHM,0.5W	32997	3386X-T07-501
A1R241	311-1237-00			RES,VAR,NONWW:1K OHM,10%,0.50W	32997	3386X-DY6-102
A1R242	315-0273-00			RES,FXD,FILM:27K OHM,5%,0.25W	57668	NTR25J-E27K0
A1R244	321-0172-00			RES,FXD,FILM:604 OHM,1%,0.125W,TC=T0	19701	5033ED604R0F
A1R245	321-0172-00			RES,FXD,FILM:604 OHM,1%,0.125W,TC=T0	19701	5033ED604R0F
A1R250	315-0221-00			RES,FXD,FILM:220 OHM,5%,0.25W	57668	NTR25J-E220E
A1R251	315-0221-00			RES,FXD,FILM:220 OHM,5%,0.25W	57668	NTR25J-E220E
A1R254	321-0110-00			RES,FXD,FILM:137 OHM,1%,0.125W,TC=T0	07716	CEAD137R0F
A1R255	321-0110-00			RES,FXD,FILM:137 OHM,1%,0.125W,TC=T0	07716	CEAD137R0F
A1R256	322-0175-00			RES,FXD,FILM:649 OHM,1%,0.25W,TC=T0	75042	CEBT0-6490F
A1R257	322-0175-00			RES,FXD,FILM:649 OHM,1%,0.25W,TC=T0	75042	CEBT0-6490F
A1R258	322-0180-00			RES,FXD,FILM:732 OHM,1%,0.25W,TC=T0	75042	CEBT0-7320F
A1R259	322-0180-00			RES,FXD,FILM:732 OHM,1%,0.25W,TC=T0	75042	CEBT0-7320F
A1R261	323-0058-00			RES,FXD,FILM:39.2 OHM,1%,0.5W,TC=T0	57668	CRB11FX39R2E
A1R262	315-0151-00			RES,FXD,FILM:150 OHM,5%,0.25W	57668	NTR25J-E150E
A1R266	323-0114-00			RES,FXD,FILM:150 OHM,1%,0.5W,TC=T0	75042	CECT0-1500F
A1R267	323-0114-00			RES,FXD,FILM:150 OHM,1%,0.5W,TC=T0	75042	CECT0-1500F
A1R268	323-0114-00			RES,FXD,FILM:150 OHM,1%,0.5W,TC=T0	75042	CECT0-1500F

Component No.	Tektronix Part No.	Serial/Assembly No. Effective	Dscont	Name & Description	Mfr. Code	Mfr. Part No.
A1R183	315-0111-00			RES,FXD,FILM:110 OHM,5%,0.25W	57668	NTR25J-E110E
A1R185	315-0101-00			RES,FXD,FILM:100 OHM,5%,0.25W	57668	NTR25J-E 100E
A1R186	315-0101-00			RES,FXD,FILM:100 OHM,5%,0.25W	57668	NTR25J-E 100E
A1R188	315-0182-00			RES,FXD,FILM:1.8K OHM,5%,0.25W	57668	NTR25J-E1K8
A1R189	315-0302-00			RES,FXD,FILM:3K OHM,5%,0.25W	57668	NTR25J-E03K0
A1R192	315-0101-00			RES,FXD,FILM:100 OHM,5%,0.25W	57668	NTR25J-E 100E
A1R193	315-0101-00			RES,FXD,FILM:100 OHM,5%,0.25W	57668	NTR25J-E 100E
A1R194	315-0511-00	B010100	B012239	RES,FXD,FILM:510 OHM,5%,0.25W	19701	5043CX510R0J
A1R194	315-0471-00	B012240		RES,FXD,FILM:470 OHM,5%,0.25W	57668	NTR25J-E470E
A1R195	311-1238-00			RES,VAR,NONWW:TRMR,5K OHM,0.5W	32997	3386X-DY6-502
A1R200	315-0911-00			RES,FXD,FILM:910 OHM,5%,0.25W	57668	NTR25J-E910E
A1R201	315-0200-00	B012240		RES,FXD,FILM:20 OHM,5%,0.25W	19701	5043CX20R00J
A1R202	321-0178-00			RES,FXD,FILM:698 OHM,1%,0.125W,TC=T0	07716	CEAD698R0F
A1R203	321-0178-00			RES,FXD,FILM:698 OHM,1%,0.125W,TC=T0	07716	CEAD698R0F
A1R204	321-0089-00			RES,FXD,FILM:82.5 OHM,1%,0.125W,TC=T0	91637	CMF55116GB2R50F
A1R206	321-0139-00			RES,FXD,FILM:274 OHM,1%,0.125W,TC=T0	07716	CEAD274R0F
A1R207	321-0139-00			RES,FXD,FILM:274 OHM,1%,0.125W,TC=T0	07716	CEAD274R0F
A1R210	315-0431-00	B010100	B017648	RES,FXD,FILM:430 OHM,5%,0.25W	19701	5043CX430R0J
A1R210	315-0221-00	B017649		RES,FXD,FILM:220 OHM,5%,0.25W	57668	NTR25J-E220E
A1R212	321-0086-00			RES,FXD,FILM:76.8 OHM,1%,0.125W,TC=T0	91637	CMF55116G76R80F
A1R213	321-0086-00			RES,FXD,FILM:76.8 OHM,1%,0.125W,TC=T0	91637	CMF55116G76R80F
A1R215	321-0125-00			RES,FXD,FILM:196 OHM,1%,0.125W, TC=T0	07716	CEAD196R0F
A1R216	321-0163-00			RES,FXD,FILM:487 OHM,1%,0.125W,TC=T0	07716	CEAD487R0F
A1R217	321-0163-00			RES,FXD,FILM:487 OHM,1%,0.125W,TC=T0	07716	CEAD487R0F
A1R218	321-0102-00			RES,FXD,FILM:113 OHM,1%,0.125W,TC=T0	07716	CEAD113R0F
A1R219	321-0102-00			RES,FXD,FILM:113 OHM,1%,0.125W,TC=T0	07716	CEAD113R0F
A1R220	307-0104-00			RES,FXD,CMPSN:3.3 OHM,5%,0.25W	01121	CB33G5
A1R222	321-0318-00			RES,FXD,FILM:20.0K OHM,1%,0.125W,TC=T0	19701	5033ED20K00F
A1R223	321-0318-00			RES,FXD,FILM:20.0K OHM,1%,0.125W,TC=T0	19701	5033ED20K00F
A1R225	315-0103-00			RES,FXD,FILM:10K OHM,5%,0.25W	19701	5043CX10K00J
A1R226	315-0221-00			RES,FXD,FILM:220 OHM,5%,0.25W	57668	NTR25J-E220E

Component No.	Tektronix Part No.	Serial/Assembly No. Effective	Dscont	Name & Description	Mfr. Code	Mfr. Part No.
A1R269	323-0114-00			RES,FXD,FILM:150 OHM,1%,0.5W,TC=T0	75042	CECT0-1500F
A1R270	323-0114-00			RES,FXD,FILM:150 OHM,1%,0.5W,TC=T0	75042	CECT0-1500F
A1R271	323-0114-00			RES,FXD,FILM:150 OHM,1%,0.5W,TC=T0	75042	CECT0-1500F
A1R279	315-0223-00			RES,FXD,FILM:22K OHM,5%,0.25W	19701	5043CX22K00J92U
A1R281	315-0821-00			RES,FXD,FILM:820 OHM,5%,0.25W	19701	5043CX820R0J
A1R282	315-0752-00			RES,FXD,FILM:7.5K OHM,5%,0.25W	57668	NTR25J-E07K5
A1R283	315-0471-00			RES,FXD,FILM:470 OHM,5%,0.25W	57668	NTR25J-E470E
A1R284	315-0621-00			RES,FXD,FILM:620 OHM,5%,0.25W	57668	NTR25J-E620E
A1R285	315-0561-00			RES,FXD,FILM:560 OHM,5%,0.25W	19701	5043CX560R0J
A1R286	321-0068-00			RES,FXD,FILM:49.9 OHM,0.5%,0.125W,TC=T0	91637	CMF55116G49R90F
A1R287	321-0068-00			RES,FXD,FILM:49.9 OHM,0.5%,0.125W,TC=T0	91637	CMF55116G49R90F
A1R288	315-0431-00			RES,FXD,FILM:430 OHM,5%,0.25W	19701	5043CX430R0J
A1R289	315-0431-00			RES,FXD,FILM:430 OHM,5%,0.25W	19701	5043CX430R0J
A1R292	321-0179-00			RES,FXD,FILM:715 OHM,1%,0.125W,TC=T0	07716	CEAD715R0F
A1R293	315-0620-00			RES,FXD,FILM:62 OHM,5%,0.25W	19701	5043CX63R00J
A1R301	315-0221-00			RES,FXD,FILM:220 OHM,5%,0.25W	57668	NTR25J-E220E
A1R302	315-0221-00			RES,FXD,FILM:220 OHM,5%,0.25W	57668	NTR25J-E220E
A1R303	315-0221-00			RES,FXD,FILM:220 OHM,5%,0.25W	57668	NTR25J-E220E
A1R304	315-0152-00			RES,FXD,FILM:1.5K OHM,5%,0.25W	57668	NTR25J-E01K5
A1R305	315-0152-00			RES,FXD,FILM:1.5K OHM,5%,0.25W	57668	NTR25J-E01K5
A1R306	315-0470-00			RES,FXD,FILM:47 OHM,5%,0.25W	57668	NTR25J-E47E0
A1R307	315-0470-00			RES,FXD,FILM:47 OHM,5%,0.25W	57668	NTR25J-E47E0
A1R309	311-1564-00			RES,VAR,NONWW:TRMR,500 OHM,0.5W	32997	3352T-CK5501
A1R310	321-0194-00			RES,FXD,FILM:1.02K OHM,1%,0.125W,TC=T0	07716	CEAD10200F
A1R311	321-0194-00	B010100	B012999	RES,FXD,FILM:1.02K OHM,1%,0.125W,TC=T0	07716	CEAD10200F
A1R311	321-0189-00	B013000		RES,FXD,FILM:909 OHM,1%,0.125W,TC=T2	19701	5033ED909R0F
A1R312	321-0098-00			RES,FXD,FILM:102 OHM,1%,0.125W,TC=T0	07716	CEAD102R0F
A1R314	321-0170-00			RES,FXD,FILM:576 OHM,1%,0.125W,TC=T0	07716	CEAD576R0F
A1R315	321-0170-00			RES,FXD,FILM:576 OHM,1%,0.125W,TC=T0	07716	CEAD576R0F
A1R317	321-0209-00	B010100	B010684	RES,FXD,FILM:1.47K OHM,1%,0.125W,TC=T0	19701	5033ED1K47F
A1R317	321-0218-00	B010685		RES,FXD,FILM:1.82K OHM,1%,0.125W,TC=T0	19701	5033ED1K82F

A1R318	321-0198-00	B010100	B010684	RES,FXD,FILM:1.13K OHM,1%,0.125W,TC=T0	07716	CEAD11300F
A1R318	321-0193-00	B010685		RES,FXD,FILM:1K OHM,1%,0.125W,TC=T0	19701	5033ED1K00F
A1R319	321-0213-00	B010100	B010684	RES,FXD,FILM:1.62K OHM,1%,0.125W,TC=T0	07716	CEAD16200F
A1R319	321-0212-00	B010685		RES,FXD,FILM:1.58K OHM,1%,0.125W,TC=T0	19701	5033ED1K58F
A1R321	321-0208-00			RES,FXD,FILM:1.43K OHM,1%,0.125W,TC=T0	19701	5033ED1K43F
A1R322	321-0241-00	B010100	B010684	RES,FXD,FILM:3.16K OHM,1%,0.125W,TC=T0	07716	CEAD31600F
A1R322	321-0238-00	B010685		RES,FXD,FILM:2.94K OHM,1%,0.125W,TC=T0	07716	CEAD29400F
A1R324	315-0101-00			RES,FXD,FILM:100 OHM,5%,0.25W	57668	NTR25J-E 100E
A1R326	315-0221-00			RES,FXD,FILM:220 OHM,5%,0.25W	57668	NTR25J-E220E
A1R327	315-0221-00			RES,FXD,FILM:220 OHM,5%,0.25W	57668	NTR25J-E220E
A1R328	315-0221-00			RES,FXD,FILM:220 OHM,5%,0.25W	57668	NTR25J-E220E
A1R329	315-0152-00			RES,FXD,FILM:1.5K OHM,5%,0.25W	57668	NTR25J-E01K5
A1R330	315-0152-00			RES,FXD,FILM:1.5K OHM,5%,0.25W	57668	NTR25J-E01K5
A1R331	315-0470-00			RES,FXD,FILM:47 OHM,5%,0.25W	57668	NTR25J-E47E0
A1R332	315-0470-00			RES,FXD,FILM:47 OHM,5%,0.25W	57668	NTR25J-E47E0
A1R335	321-0203-00			RES,FXD,FILM:1.27K OHM,1%,0.125W,TC=T0	07716	CEAD12700F
A1R336	321-0203-00	B010100	B012999	RES,FXD,FILM:1.27K OHM,1%,0.125W,TC=T0	07716	CEAD12700F
A1R336	321-0199-00	B130000		RES,FXD,FILM:1.15K OHM,1%,0.125W,TC=T0	07716	CEAD11500F
A1R337	321-0098-00			RES,FXD,FILM:102 OHM,1%,0.125W,TC=T0	07716	CEAD102R0F
A1R339	321-0170-00			RES,FXD,FILM:576 OHM,1%,0.125W,TC=T0	07716	CEAD576R0F
A1R340	321-0170-00			RES,FXD,FILM:576 OHM,1%,0.125W,TC=T0	07716	CEAD576R0F
A1R342	321-0209-00	B010100	B010684	RES,FXD,FILM:1.47K OHM,1%,0.125W,TC=T0	19701	5033ED1K47F
A1R342	321-0218-00	B010685		RES,FXD,FILM:1.82K OHM,1%,0.125W,TC=T0	19701	5033ED1K82F
A1R343	321-0198-00	B010100	B010684	RES,FXD,FILM:1.13K OHM,1%,0.125W,TC=T0	07716	CEAD11300F
A1R343	321-0193-00			RES,FXD,FILM:1K OHM,1%,0.125W,TC=T0	19701	5033ED1K00F
A1R344	321-0213-00	B010100	B010684	RES,FXD,FILM:1.62K OHM,1%,0.125W,TC=T0	07716	CEAD16200F
A1R344	321-0212-00	B010685		RES,FXD,FILM:1.58K OHM,1%,0.125W,TC=T0	19701	5033ED1K58F
A1R346	321-0208-00			RES,FXD,FILM:1.43K OHM,1%,0.125W,TC=T0	19701	5033ED1K43F

Component No.	Tektronix Part No.	Serial/Assembly No. Effective	Dscont	Name & Description	Mfr. Code	Mfr. Part No.
A1R347	321-0241-00	B010100	B010684	RES,FXD,FILM:3.16K OHM,1%,0.125W,TC=T0	07716	CEAD31600F
A1R347	321-0238-00	B010685		RES,FXD,FILM:2.94K OHM,1%,0.125W,TC=T0	07716	CEAD29400F
A1R349	315-0101-00			RES,FXD,FILM:100 OHM,5%,0.25W	57668	NTR25J-E 100E
A1R350	315-0470-00			RES,FXD,FILM:47 OHM,5%,0.25W	57668	NTR25J-E47E0
A1R351	315-0470-00			RES,FXD,FILM:47 OHM,5%,0.25W	57668	NTR25J-E47E0
A1R352	321-0275-00	B010100	B010684	RES,FXD,FILM:7.15K OHM,1%,0.125W,TC=T0	07716	CEAD71500F
A1R352	321-0274-00	B010685		RES,FXD,FILM:6.98K OHM,1%,0.125W,TC=T0	19701	5043ED6K980F
A1R353	321-0275-00	B010100	B010684	RES,FXD,FILM:7.15K OHM,1%,0.125W,TC=T0	07716	CEAD71500F
A1R353	321-0274-00	B010685		RES,FXD,FILM:6.98K OHM,1%,0.125W,TC=T0	19701	5043ED6K980F
A1R354	315-0272-00	B010685		RES,FXD,FILM:2.7K OHM,5%,0.25W	57668	NTR25J-ED2K7
A1R356	315-0622-00			RES,FXD,FILM:6.2K OHM,5%,0.25W	19701	5043CX6K200J
A1R357	321-0149-00			RES,FXD,FILM:348 OHM,1%,0.125W,TC=T0	07716	CEAD348R0F
A1R358	315-0101-00			RES,FXD,FILM:100 OHM,5%,0.25W	57668	NTR25J-E 100E
A1R359	321-0148-00			RES,FXD,FILM:340 OHM,1%,0.125W,TC=T0	07716	CEAD340R0F
A1R360	321-0156-00			RES,FXD,FILM:412 OHM,1%,0.125W,TC=T0	07716	CEAD412R0F
A1R361	315-0101-00			RES,FXD,FILM:100 OHM,5%,0.25W	57668	NTR25J-E 100E
A1R363	315-0331-00			RES,FXD,FILM:330 OHM,5%,0.25W	57668	NTR25J-E330E
A1R365	315-0620-00			RES,FXD,FILM:62 OHM,5%,0.25W	19701	5043CX63R00J
A1R366	315-0202-00			RES,FXD,FILM:2K OHM,5%,0.25W	57668	NTR25J-E 2K
A1R367	315-0911-00			RES,FXD,FILM:910 OHM,5%,0.25W	57668	NTR25J-E910E
A1R369	315-0751-00			RES,FXD,FILM:750 OHM,5%,0.25W	57668	NTR25J-E750E
A1R372	315-0220-00			RES,FXD,FILM:22 OHM,5%,0.25W	19701	5043CX22R00J
A1R374	315-0202-00			RES,FXD,FILM:2K OHM,5%,0.25W	57668	NTR25J-E 2K
A1R381	321-0444-00			RES,FXD,FILM:412K OHM,1%,0.125W,TC=T0	07716	CEAD41202F
A1R382	315-0470-00			RES,FXD,FILM:47 OHM,5%,0.25W	57668	NTR25J-E47E0
A1R384	315-0121-00			RES,FXD,FILM:120 OHM,5%,0.25W	19701	5043CX120R0J
A1R385	315-0130-00			RES,FXD,FILM:13 OHM,5%,0.25W	01121	CB1305
A1R386	315-0911-00			RES,FXD,FILM:910 OHM,5%,0.25W	57668	NTR25J-E910E
A1R387	311-1558-00	B010100	B012239	RES,VAR,NONWW:TRMR,20K OHM,0.5W	32997	3352T-1-203
A1R387	311-1198-00	B012240		RES,VAR,NONWW:TRMR,20K OHM,0.5W	32997	3386X-T07-203
A1R388	315-0822-00			RES,FXD,FILM:8.2K OHM,5%,0.25W	19701	5043CX8K200J

A1R389	315-0100-00		RES,FXD,FILM:10 OHM,5%,0.25W	19701	5043CX10RR00J
A1R390	315-0101-00		RES,FXD,FILM:100 OHM,5%,0.25W	57668	NTR25J-E 100E
A1R392	315-0751-00		RES,FXD,FILM:750 OHM,5%,0.25W	57668	NTR25J-E750E
A1R393	315-0240-00		RES,FXD,FILM:24 OHM,5%,0.25W	57668	NTR25J-E24E0
A1R395	315-0911-00		RES,FXD,FILM:910 OHM,5%,0.25W	57668	NTR25J-E910E
A1R397	315-0200-00		RES,FXD,FILM:20 OHM,5%,0.25W	19701	5043CX20R00J
A1R398	315-0201-00		RES,FXD,FILM:200 OHM,5%,0.25W	57668	NTR25J-E200E
A1R399	315-0751-00		RES,FXD,FILM:750 OHM,5%,0.25W	57668	NTR25J-E750E
A1R401	315-0200-00	B012240	RES,FXD,FILM:20 OHM,5%,0.25W	19701	5043CX20R00J
A1R402	315-0182-00		RES,FXD,FILM:1.8K OHM,5%,0.25W	57668	NTR25J-E1K8
A1R405	315-0752-00		RES,FXD,FILM:7.5K OHM,5%,0.25W	57668	NTR25J-E07K5
A1R407	315-0752-00		RES,FXD,FILM:7.5K OHM,5%,0.25W	57668	NTR25J-E07K5
A1R408	315-0392-00		RES,FXD,FILM:3.9K OHM,5%,0.25W	57668	NTR25J-E03K9
A1R411	315-0103-00		RES,FXD,FILM:10K OHM,5%,0.25W	19701	5043CX10K00J
A1R412	315-0102-00		RES,FXD,FILM:1K OHM,5%,0.25W	57668	NTR25JE01K0
A1R413	315-0113-00		RES,FXD,FILM:11K OHM,5%,0.25W	19701	5043CX11K00J
A1R414	315-0244-00		RES,FXD,FILM:240K OHM,5%,0.25W	19701	5043CX240K0J
A1R415	315-0244-00		RES,FXD,FILM:240K OHM,5%,0.25W	19701	5043CX240K0J
A1R416	315-0473-00		RES,FXD,FILM:47K OHM,5%,0.25W	57668	NTR25J-E47K0
A1R417	315-0473-00		RES,FXD,FILM:47K OHM,5%,0.25W	57668	NTR25J-E47K0
A1R419	315-0182-00		RES,FXD,FILM:1.8K OHM,5%,0.25W	57668	NTR25J-E1K8
A1R420	315-0101-00		RES,FXD,FILM:100 OHM,5%,0.25W	57668	NTR25J-E 100E
A1R421	315-0203-00		RES,FXD,FILM:20K OHM,5%,0.25W	57668	NTR25J-E 20K
A1R422	315-0100-00		RES,FXD,FILM:10 OHM,5%,0.25W	19701	5043CX10RR00J
A1R423	315-0100-00		RES,FXD,FILM:10 OHM,5%,0.25W	19701	5043CX10RR00J
A1R424	315-0203-00		RES,FXD,FILM:20K OHM,5%,0.25W	57668	NTR25J-E 20K
A1R426	315-0434-00		RES,FXD,FILM:430K OHM,5%,0.25W	57668	NTR25J-E430K
A1R427	315-0434-00		RES,FXD,FILM:430K OHM,5%,0.25W	57668	NTR25J-E430K

Component No.	Tektronix Part No.	Serial/Assembly No. Effective	Dscont	Name & Description	Mfr. Code	Mfr. Part No.
A1R428	315-0102-00			RES,FXD,FILM:1K OHM,5%,0.25W	57668	NTR25JE01K0
A1R429	315-0102-00			RES,FXD,FILM:1K OHM,5%,0.25W	57668	NTR25JE01K0
A1R432	315-0823-00			RES,FXD,FILM:82K OHM,5%,0.25W	57668	NTR25J-E82K
A1R433	315-0823-00			RES,FXD,FILM:82K OHM,5%,0.25W	57668	NTR25J-E82K
A1R434	311-1646-00			RES,VAR,NONWW:TRMR,2M OHM,0.5W	32997	3386X-T07-205
A1R435	311-1646-00			RES,VAR,NONWW:TRMR,2M OHM,0.5W	32997	3386X-T07-205
A1R440	315-0101-00			RES,FXD,FILM:100 OHM,5%,0.25W	57668	NTR25J-E 100E
A1R441	315-0101-00			RES,FXD,FILM:100 OHM,5%,0.25W	57668	NTR25J-E 100E
A1R442	321-0087-00			RES,FXD,FILM:78.7 OHM,1%,0.125W,TC=T0	91637	CMF55116G78R70F
A1R443	321-0087-00			RES,FXD,FILM:78.7 OHM,1%,0.125W,TC=T0	91637	CMF55116G78R70F
A1R444	315-0162-00			RES,FXD,FILM:1.6K OHM,5%,0.25W	19701	5043CX1K600J
A1R446	315-0224-00			RES,FXD,FILM:220K OHM,5%,0.25W	57668	NTR25J-E220K
A1R448	315-0270-00			RES,FXD,FILM:27 OHM,5%,0.25W	19701	5043CX27R00J
A1R449	315-0270-00			RES,FXD,FILM:27 OHM,5%,0.25W	19701	5043CX27R00J
A1R451	315-0100-00			RES,FXD,FILM:10 OHM,5%,0.25W	19701	5043CX10RR00J
A1R452	315-0272-00			RES,FXD,FILM:2.7K OHM,5%,0.25W	57668	NTR25J-E02K7
A1R453	315-0470-00			RES,FXD,FILM:47 OHM,5%,0.25W	57668	NTR25J-E47E0
A1R454	315-0470-00	B016053		RES,FXD,FILM:47 OHM,5%,0.25W	57668	NTR25J-E47E0
A1R455	315-0100-00			RES,FXD,FILM:10 OHM,5%,0.25W	19701	5043CX10RR00J
A1R457	321-0207-00			RES,FXD,FILM:1.40K OHM,1%,0.125W,TC=T0	19701	5033ED1K400F
A1R458	321-0197-00			RES,FXD,FILM:1.10K OHM,1%,0.125W,TC=T0	07716	CEAD11000F
A1R459	315-0242-00			RES,FXD,FILM:2.4K OHM,5%,0.25W	57668	NTR25J-E02K4
A1R460	321-0091-00			RES,FXD,FILM:86.6 OHM,1%,0.125W,TC=T0	91637	CMF55116G86R60F
A1R461	321-0203-00			RES,FXD,FILM:1.27K OHM,1%,0.125W,TC=T0	07716	CEAD12700F
A1R462	321-0201-00			RES,FXD,FILM:1.21K OHM,1%,0.125W,TC=T0	19701	5043ED1K210F
A1R463	321-0090-00			RES,FXD,FILM:84.5 OHM,1%,0.125W,TC=T0	91637	CMF55116G84R50F
A1R464	315-0271-00			RES,FXD,FILM:270 OHM,5%,0.25W	57668	NTR25J-E270E
A1R465	315-0431-00			RES,FXD,FILM:430 OHM,5%,0.25W	19701	5043CX430R0J
A1R469	315-0820-00			RES,FXD,FILM:82 OHM,5%,0.25W	57668	NTR25J-E82E0
A1R470	315-0113-00			RES,FXD,FILM:11K OHM,5%,0.25W	19701	5043CX11K00J

A1R471	311-1245-00	RES,VAR,NONWW:TRMR,10K OHM,0.5W	32997	3386X-DY6-103
A1R473	315-0392-00	RES,FXD,FILM:3.9K OHM,5%,0.25W	57668	NTR25J-E03K9
A1R474	315-0432-00	RES,FXD,FILM:4.3K OHM,5%,0.25W	57668	NTR25J-E04K3
A1R478	315-0222-00	RES,FXD,FILM:2.2K OHM,5%,0.25W	57668	NTR25J-E02K2
A1R479	311-1236-00	RES,VAR,NONWW:TRMR,250 OHM,0.5W	32997	3386X-T07-251
A1R483	315-0391-00	RES,FXD,FILM:390 OHM,5%,0.25W	57668	NTR25J-E390E
A1R486	315-0241-00	RES,FXD,FILM:240 OHM,5%,0.25W	19701	5043CX240R0J
A1R487	315-0471-00	RES,FXD,FILM:470 OHM,5%,0.25W	57668	NTR25J-E470E
A1R492	315-0470-00	RES,FXD,FILM:47 OHM,5%,0.25W	57668	NTR25J-E47E0
A1R494	307-0104-00	RES,FXD,CMPSN:3.3 OHM,5%,0.25W	01121	CB33G5
A1R499	307-0104-00	RES,FXD,CMPSN:3.3 OHM,5%,0.25W	01121	CB33G5
A1R500	315-0101-00	RES,FXD,FILM:100 OHM,5%,0.25W	57668	NTR25J-E 100E
A1R501	315-0512-00	RES,FXD,FILM:5.1K OHM,5%,0.25W	57668	NTR25J-E05K1
A1R502	315-0911-00	RES,FXD,FILM:910 OHM,5%,0.25W	57668	NTR25J-E910E
A1R503	315-0473-00	RES,FXD,FILM:47K OHM,5%,0.25W	57668	NTR25J-E47K0
A1R504	315-0124-00	RES,FXD,FILM:120K OHM,5%,0.25W	19701	5043CX120K0J
A1R505	315-0473-00	RES,FXD,FILM:47K OHM,5%,0.25W	57668	NTR25J-E47K0
A1R507	315-0391-00	RES,FXD,FILM:390 OHM,5%,0.25W	57668	NTR25J-E390E
A1R509	315-0222-00	RES,FXD,FILM:2.2K OHM,5%,0.25W	57668	NTR25J-E02K2
A1R511	315-0392-00	RES,FXD,FILM:3.9K OHM,5%,0.25W	57668	NTR25J-E03K9
A1R512	315-0432-00	RES,FXD,FILM:4.3K OHM,5%,0.25W	57668	NTR25J-E04K3
A1R513	315-0391-00	RES,FXD,FILM:390 OHM,5%,0.25W	57668	NTR25J-E390E
A1R516	315-0392-00	RES,FXD,FILM:3.9K OHM,5%,0.25W	57668	NTR25J-E03K9
A1R517	315-0432-00	RES,FXD,FILM:4.3K OHM,5%,0.25W	57668	NTR25J-E04K3
A1R518	315-0102-00	RES,FXD,FILM:1K OHM,5%,0.25W	57668	NTR25JE01K0
A1R523	315-0153-00	RES,FXD,FILM:15K OHM,5%,0.25W	19701	5043CX15K00J
A1R524	321-0318-00	RES,FXD,FILM:20.0K OHM,1%,0.125W,TC=T0	19701	5033ED20K00F
A1R525	321-0322-00	RES,FXD,FILM:22.1K OHM,0.1%,0.125W,TC=T0	19701	5033ED22K10F
A1R526	315-0152-00	RES,FXD,FILM:1.5K OHM,5%,0.25W	57668	NTR25J-E01K5

Component No.	Tektronix Part No.	Serial/Assembly No. Effective	Dscont	Name & Description	Mfr. Code	Mfr. Part No.
A1R527	315-0472-00			RES,FXD,FILM:4.7K OHM,5%,0.25W	57668	NTR25J-E04K7
A1R528	315-0911-00	B010100	B021145	RES,FXD,FILM:910 OHM,5%,0.25W	57668	NTR25J-E910E
A1R528	315-0112-00	B021146		RES,FXD,FILM:1.1K OHM,5%,0.25W	19701	5043CX1K100J
A1R529	315-0822-00			RES,FXD,FILM:8.2K OHM,5%,0.25W	19701	5043CX8K200J
A1R538	315-0512-00			RES,FXD,FILM:5.1K OHM,5%,0.25W	57668	NTR25J-E05K1
A1R539	315-0512-00			RES,FXD,FILM:5.1K OHM,5%,0.25W	57668	NTR25J-E05K1
A1R540	315-0511-00			RES,FXD,FILM:510 OHM,5%,0.25W	19701	5043CX510R0J
A1R541	315-0511-00			RES,FXD,FILM:510 OHM,5%,0.25W	19701	5043CX510R0J
A1R544	315-0431-00			RES,FXD,FILM:430 OHM,5%,0.25W	19701	5043CX430R0J
A1R545	315-0102-00			RES,FXD,FILM:1K OHM,5%,0.25W	57668	NTR25JE01K0
A1R547	315-0102-00			RES,FXD,FILM:1K OHM,5%,0.25W	57668	NTR25JE01K0
A1R548	315-0102-00			RES,FXD,FILM:1K OHM,5%,0.25W	57668	NTR25JE01K0
A1R549	315-0681-00			RES,FXD,FILM:680 OHM,5%,0.25W	57668	NTR25J-E680E
A1R555	315-0821-00			RES,FXD,FILM:820 OHM,5%,0.25W	19701	5043CX820R0J
A1R556	315-0512-00			RES,FXD,FILM:5.1K OHM,5%,0.25W	57668	NTR25J-E05K1
A1R558	315-0512-00			RES,FXD,FILM:5.1K OHM,5%,0.25W	57668	NTR25J-E05K1
A1R560	315-0512-00			RES,FXD,FILM:5.1K OHM,5%,0.25W	57668	NTR25J-E05K1
A1R561	315-0512-00			RES,FXD,FILM:5.1K OHM,5%,0.25W	57668	NTR25J-E05K1
A1R562	315-0512-00			RES,FXD,FILM:5.1K OHM,5%,0.25W	57668	NTR25J-E05K1
A1R564	315-0202-00			RES,FXD,FILM:2K OHM,5%,0.25W	57668	NTR25J-E 2K
A1R565	315-0301-00			RES,FXD,FILM:300 OHM,5%,0.25W	57668	NTR25J-E300E
A1R566	315-0511-00			RES,FXD,FILM:510 OHM,5%,0.25W	19701	5043CX510R0J
A1R568	315-0332-00			RES,FXD,FILM:3.3K OHM,5%,0.25W	57668	NTR25J-E03K3
A1R569	315-0432-00			RES,FXD,FILM:4.3K OHM,5%,0.25W	57668	NTR25J-E04K3
A1R571	315-0222-00			RES,FXD,FILM:2.2K OHM,5%,0.25W	57668	NTR25J-E02K2
A1R572	315-0102-00			RES,FXD,FILM:1K OHM,5%,0.25W	57668	NTR25JE01K0
A1R573	315-0222-00			RES,FXD,FILM:2.2K OHM,5%,0.25W	57668	NTR25J-E02K2
A1R574	315-0102-00			RES,FXD,FILM:1K OHM,5%,0.25W	57668	NTR25JE01K0
A1R576	315-0561-00			RES,FXD,FILM:560 OHM,5%,0.25W	19701	5043CX560R0J
A1R577	315-0221-00			RES,FXD,FILM:220 OHM,5%,0.25W	57668	NTR25J-E220E

A1R578	315-0561-00			RES,FXD,FILM:560 OHM,5%,0.25W	19701	5043CX560R0J
A1R580	315-0181-00			RES,FXD,FILM:180 OHM,5%,0.25W	57668	NTR25J-E180E
A1R582	315-0151-00			RES,FXD,FILM:150 OHM,5%,0.25W	57668	NTR25J-E150E
A1R583	317-0101-00	B013490		RES,FXD,CMPSN:100 OHM,5%,0.125W	01121	BB1015
A1R586	315-0101-00			RES,FXD,FILM:100 OHM,5%,0.25W	57668	NTR25J-E 100E
A1R645	315-0201-00			RES,FXD,FILM:200 OHM,5%,0.25W	57668	NTR25J-E200E
A1R646	311-1563-00	B010100	B013599	RES,VAR,NONWW:TRMR,1K OHM,0.5W	32997	3352T-DY7-102
A1R646	311-1919-00	B013600		RES,VAR,NONWW:TRMR,1K OHM,10%,0.5 W	32997	3386C-T07-102
A1R648	315-0512-00			RES,FXD,FILM:5.1K OHM,5%,0.25W	57668	NTR25J-E05K1
A1R649	315-0512-00			RES,FXD,FILM:5.1K OHM,5%,0.25W	57668	NTR25J-E05K1
A1R673	315-0472-00			RES,FXD,FILM:4.7K OHM,5%,0.25W	57668	NTR25J-E04K7
A1R756	315-0912-00			RES,FXD,FILM:9.1K OHM,5%,0.25W	57668	NTR25J-E09K1
A1R757	315-0561-00			RES,FXD,FILM:560 OHM,5%,0.25W	19701	5043CX560R0J
A1R758	321-0343-00	B010100	B014174	RES,FXD,FILM:36.5K OHM,1%,0.125W,TC=T0	07716	CEAD36501F
A1R758	321-0336-00	B014175		RES,FXD,FILM:30.9K OHM,1%,0.125W,TC=T0	19701	5043ED30K90F
A1R759	321-0267-00			RES,FXD,FILM:5.90K OHM,1%,0.125_,TC=T0	19701	5033ED5K900F
A1R760	311-1565-00			RES,VAR,NONWW:TRMR,250 OHM,0.5W	32997	3352T-1-251
A1R761	321-0210-00			RES,FXD,FILM:1.50K OHM,1%,0.125W,TC=T0	19701	5033ED1K50F
A1R764	315-0221-00	B010100	B016052	RES,FXD,FILM:220 OHM,5%,0.25W	57668	NTR25J-E220E
A1R764	315-0201-00	B016053		RES,FXD,FILM:200 OHM,5%,0.25W	57668	NTR25J-E200E
A1R766	321-0109-00			RES,FXD,FILM:133 OHM,1%,0.125W,TC=T0	07716	CEAD133R0F
A1R768	321-0158-00			RES,FXD,FILM:432 OHM,1%,0.125W,TC=T0	07716	CEAD432R0F
A1R770	315-0470-00			RES,FXD,FILM:47 OHM,5%,0.25W	57668	NTR25J-E47E0
A1R773	321-0182-00			RES,FXD,FILM:768 OHM,1%,0.125W,TC=T0	07716	CEAD768R0F
A1R775	323-0310-00			RES,FXD,FILM:16.5K OHM,1%,0.5W,TC=T0	75042	CECT0-1652F
A1R776	321-0205-00			RES,FXD,FILM:1.33K OHM,1%,0.125W,TC=T0	19701	5033ED1K330F
A1R777	315-0470-00			RES,FXD,FILM:47 OHM,5%,0.25W	57668	NTR25J-E47E0
A1R778	315-0101-00			RES,FXD,FILM:100 OHM,5%,0.25W	57668	NTR25J-E 100E
A1R779	315-0243-00			RES,FXD,FILM:24K OHM,5%,0.25W	57668	NTR25J-E24K0

Component No.	Tektronix Part No.	Serial/Assembly No. Effective	Dscont	Name & Description	Mfr. Code	Mfr. Part No.
A1R780	315-0470-00			RES,FXD,FILM:47 OHM,5%,0.25W	57668	NTR25J-E47E0
A1R782	321-0209-00			RES,FXD,FILM:1.47K OHM,1%,0.125W,TC=T0	19701	5033ED1K47F
A1R783	321-0201-00			RES,FXD,FILM:1.21K OHM,1%,0.125W,TC=T0	19701	5043ED1K210F
A1R785	323-0310-00			RES,FXD,FILM:16.5K OHM,1%,0.5W,TC=T0	75042	CECT0-1652F
A1R786	321-0205-00			RES,FXD,FILM:1.33K OHM,1%,0.125W,TC=T0	19701	5033ED1K330F
A1R787	315-0470-00			RES,FXD,FILM:47 OHM,5%,0.25W	57668	NTR25J-E47E0
A1R788	315-0101-00			RES,FXD,FILM:100 OHM,5%,0.25W	57668	NTR25J-E 100E
A1R789	315-0243-00			RES,FXD,FILM:24K OHM,5%,0.25W	57668	NTR25J-E24K0
A1R792	321-0263-00			RES,FXD,FILM:5.36K OHM,1%,0.125W,TC=T0	07716	CEAD53600F
A1R793	321-0361-00			RES,FXD,FILM:56.2K OHM,1%,0.125W,TC=T0	07716	CEAD56201F
A1R796	315-0100-00			RES,FXD,FILM:10 OHM,5%,0.25W	19701	5043CX10RR00J
A1R797	315-0100-00			RES,FXD,FILM:10 OHM,5%,0.25W	19701	5043CX10RR00J
A1R799	315-0100-00			RES,FXD,FILM:10 OHM,5%,0.25W	19701	5043CX10RR00J
A1R800	315-0682-00			RES,FXD,FILM:6.8K OHM,5%,0.25W	57668	NTR25J-E06K8
A1R804	315-0102-00			RES,FXD,FILM:1K OHM,5%,0.25W	57668	NTR25JE01K0
A1R805	315-0562-00			RES,FXD,FILM:5.6K OHM,5%,0.25W	57668	NTR25J-E05K6
A1R810	315-0682-00			RES,FXD,FILM:6.8K OHM,5%,0.25W	57668	NTR25J-E06K8
A1R814	315-0102-00			RES,FXD,FILM:1K OHM,5%,0.25W	57668	NTR25JE01K0
A1R818	315-0302-00			RES,FXD,FILM:3K OHM,5%,0.25W	57668	NTR25J-E03K0
A1R820	315-0332-00			RES,FXD,FILM:3.3K OHM,5%,0.25W	57668	NTR25J-E03K3
A1R822	301-0512-00			RES,FXD,FILM:5.1K OHM,5%,0.5W	19701	5053CX5K100J
A1R823	301-0512-00			RES,FXD,FILM:5.1K OHM,5%,0.5W	19701	5053CX5K100J
A1R825	315-0750-00			RES,FXD,FILM:75 OHM,5%,0.25W	57668	NTR25J-E75E0
A1R826	315-0104-00			RES,FXD,FILM:100K OHM,5%,0.25W	57668	NTR25J-E100K
A1R828	315-0560-00			RES,FXD,FILM:56 OHM,5%,0.25W	57668	NTR25J-E56E0
A1R830	321-0212-00			RES,FXD,FILM:1.58K OHM,1%,0.125W,TC=70	19701	5033ED1K58F
A1R832	321-0222-00			RES,FXD,FILM:2.00K OHM,1%,0.125W,TC=T0	19701	5033ED2K00F
A1R834	315-0101-00			RES,FXD,FILM:100 OHM,5%,0.25W	57668	NTR25J-E 100E
A1R835	321-0228-00			RES,FXD,FILM:2.32K OHM,1%,0.125W,TC=T0	19701	5043ED2K32F
A1R836	315-0102-00			RES,FXD,FILM:1K OHM,5%,0.25W	57668	NTR25JE01K0

A1R840	315-0561-00			RES,FXD,FILM:560 OHM,5%,0.25W	19701	5043CX560R0J
A1R841	322-0322-00			RES,FXD,FILM:22.1K OHM,1%,0.25W,TC=T0	19701	5034RD22K1
A1R842	315-0241-00			RES,FXD,FILM:240 OHM,5%,0.25W	19701	5043CX240R0J
A1R844	315-0104-00			RES,FXD,FILM:100K OHM,5%,0.25W	57668	NTR25J-E100K
A1R845	315-0472-00			RES,FXD,FILM:4.7K OHM,5%,0.25W	57668	NTR25J-E04K7
A1R849	315-0102-00			RES,FXD,FILM:1K OHM,5%,0.25W	57668	NTR25JE01K0
A1R851	311-1558-00			RES,VAR,NONWW:TRMR,20K OHM,0.5W	32997	3352T-1-203
A1R852	315-0203-00			RES,FXD,FILM:20K OHM,5%,0.25W	57668	NTR25J-E 20K
A1R853	315-0244-00			RES,FXD,FILM:240K OHM,5%,0.25W	19701	5043CX240K0J
A1R854	315-0472-00			RES,FXD,FILM:4.7K OHM,5%,0.25W	57668	NTR25J-E04K7
A1R855	315-0102-00	B019520		RES,FXD,FILM:1K OHM,5%,0.25W	57668	NTR25JE01K0
A1R858	315-0511-00			RES,FXD,FILM:510 OHM,5%,0.25W	19701	5043CX510R0J
A1R860	315-0625-00			RES,FXD,FILM:6.2M OHM,5%,0.25W	01121	CB6255
A1R870	311-1555-00			RES,VAR,NONWW:TRMR,100K OHM,0.5W	32997	3352T-1-104
A1R871	315-0102-00			RES,FXD,FILM:1K OHM,5%,0.25W	57668	NTR25JE01K0
A1R872	315-0223-00			RES,FXD,FILM:22K OHM,5%,0.25W	19701	5043CX22K00J92U
A1R873	315-0513-00			RES,FXD,FILM:51K OHM,5%,0.25W	57668	NTR25J-E51K0
A1R874	311-1555-00			RES,VAR,NONWW:TRMR,100K OHM,0.5W	32997	3352T-1-104
A1R875	315-0102-00			RES,FXD,FILM:1K OHM,5%,0.25W	57668	NTR25JE01K0
A1R877	315-0102-00			RES,FXD,FILM:1K OHM,5%,0.25W	57668	NTR25JE01K0
A1R879	315-0514-00	B010100	B015570	RES,FXD,FILM:510K OHM,5%,0.25W	19701	5043CX510K0J
A1R885	315-0912-00			RES,FXD,FILM:9.1K OHM,5%,0.25W	57668	NTR25J-E09K1
A1R886	315-0184-00			RES,FXD,FILM:180K OHM,5%,0.25W	19701	5043CX180K0J
A1R888	301-0514-00			RES,FXD,FILM:510K OHM,5%,0.5W	19701	5053CX510K0J
A1R889	301-0514-00			RES,FXD,FILM:510K OHM,5%,0.5W	19701	5053CX510K0J
A1R890	301-0514-00			RES,FXD,FILM:510K OHM,5%,0.5W	19701	5053CX510K0J
A1R891	301-0514-00			RES,FXD,FILM:510K OHM,5%,0.5W	19701	5053CX510K0J
A1R892	301-0514-00			RES,FXD,FILM:510K OHM,5%,0.5W	19701	5053CX510K0J
A1R893	311-1933-00			RES,VAR,NONWW:PNL,5M OHM,10%,0.5W	01121	23W909

Component No.	Tektronix Part No.	Serial/Assembly No. Effective	Dscont	Name & Description	Mfr. Code	Mfr. Part No.
A1R894	301-0514-00			RES,FXD,FILM:510K OHM,5%,0.5W	19701	5053CX510K0J
A1R905	301-0823-00			RES,FXD,FILM:82K OHM,5%,0.5W	19701	5053CX82K00J
A1R906	301-0823-00			RES,FXD,FILM:82K OHM,5%,0.5W	19701	5053CX82K00J
A1R907	308-0843-00			RES,FXD,MM:0.2 OHM,5%,1/8W	91637	RS1A-90-R2J
A1R908	315-0302-00			RES,FXD,FILM:3K OHM,5%,0.25W	57668	NTR25J-E03K0
A1R909	315-0390-00			RES,FXD,FILM:39 OHM,5%,0.25W	57668	NTR25J-E39E0
A1R910	315-0301-00			RES,FXD,FILM:300 OHM,5%,0.25W	57668	NTR25J-E300E
A1R912	321-0168-00	B010100	B013299	RES,FXD,FILM:549 OHM,1%,0.125W,TC=T0	07716	CEA0549R0F
A1R912	321-0162-00	B013300		RES,FXD,FILM:475 OHM,1%,0.125W,TC=T0	19701	5033ED475R0F
A1R913	321-0289-00			RES,FXD,FILM:10.0K OHM,1%,0.125W,TC=T0	19701	5033ED10K0F
A1R914	321-0378-00			RES,FXD,FILM:84.5K OHM,1%,0.125W,TC=T0	07716	CEA084501F
A1R915	321-0289-00			RES,FXD,FILM:10.0K OHM,1%,0.125W,TC=T0	19701	5033ED10K0F
A1R916	315-0514-00			RES,FXD,FILM:510K OHM,5%,0.25W	19701	5043CX510K0J
A1R917	315-0303-00			RES,FXD,FILM:30K OHM,5%,0.25W	19701	5043CX30K00J
A1R919	315-0113-00	B010100	B014885	RES,FXD,FILM:11K OHM,5%,0.25W	19701	5043CX11K00J
A1R919	315-0103-00	B014886		RES,FXD,FILM:10K OHM,5%,0.25W (NOMINAL)	19701	5043CX10K00J
A1R919	315-0113-00	B014886		RES,FXD,FILM:11K OHM,5%,0.25W (SELECTED)	19701	5043CX11K00J
A1R919	315-0912-00	B014886		RES,FXD,FILM:9.1K OHM,5%,0.25W (SELECTED)	57668	NTR25J-E09K1
A1R921	315-0303-00			RES,FXD,FILM:30K OHM,5%,0.25W	19701	5043CX30K00J
A1R922	315-0203-00			RES,FXD,FILM:20K OHM,5%,0.25W	57668	NTR25J-E 20K
A1R925	315-0124-00			RES,FXD,FILM:120K OHM,5%,0.25W	19701	5043CX120K0J
A1R926	303-0154-00			RES,FXD,CMPSN:150K OHM,5%,1W	24546	FP1 150K OHM 5%
A1R927	315-0104-00			RES,FXD,FILM:100K OHM,5%,0.25W	57668	NTR25J-E100K
A1R928	315-0682-00			RES,FXD,FILM:6.8K OHM,5%,0.25W	57668	NTR25J-E06K8

A1R929	315-0302-00			RES,FXD,FILM:3K OHM,5%,0.25M	57668	NTR25J-E03K0
A1R930	315-0104-00			RES,FXD,FILM:100K OHM,5%,0.25M	57668	NTR25J-E100K
A1R934	308-0441-00			RES,FXD,WW:3 OHM,5%,3W	14193	SA31-3R00J
A1R935	315-0121-00			RES,FXD,FILM:120 OHM,5%,0.25M	19701	5043CX120R0J
A1R937	321-0234-00			RES,FXD,FILM:2.67K OHM,1%,0.125M,TC=T0	19701	5033ED2K67F
A1R938	311-1248-00			RES,VAR,NONWW:TRMR,500 OHM,0.5M	32997	3386X-T07-501
A1R939	321-0304-00			RES,FXD,FILM:14.3K OHM,1%,0.125M,TC=T0	19701	5033ED14K30F
A1R940	315-0203-00			RES,FXD,FILM:20K OHM,5%,0.25M	57668	NTR25J-E 20K
A1R941	315-0102-00			RES,FXD,FILM:1K OHM,5%,0.25M	57668	NTR25JE01K0
A1R942	315-0102-00			RES,FXD,FILM:1K OHM,5%,0.25M	57668	NTR25JE01K0
A1R943	301-0472-00			RES,FXD,FILM:4.7K OHM,5%,0.5M	19701	5053CX4K700J
A1R944	315-0102-00			RES,FXD,FILM:1K OHM,5%,0.25M	57668	NTR25JE01K0
A1R945	301-0622-00	B010100	B013299	RES,FXD,FILM:6.2K OHM,5%,0.5M	19701	5053CX6K200J
A1R945	301-0202-00	B013300		RES,FXD,FILM:2K OHM,5%,0.5M	19701	5053CX2K000J
A1R946	315-0470-00			RES,FXD,FILM:47 OHM,5%,0.25M	57668	NTR25J-E47E0
A1R947	315-0470-00			RES,FXD,FILM:47 OHM,5%,0.25M	57668	NTR25J-E47E0
A1R949	308-0679-00			RES,FXD,WW:0.51 OHM,5%,2W	75042	BWH 0.51 OHM 5%
A1R964	307-0106-00			RES,FXD,CMPSN:4.7 OHM,5%,0.25M	01121	CB 47G5
A1R965	307-0103-00	B010100	B019719	RES,FXD,CMPSN:2.7 OHM,5%,0.25M	01121	CB27G5
A1R965	315-0200-00	B019720		RES,FXD,FILM:20 OHM,5%,0.25M	19701	5043CX20R00J
A1R966	307-0106-00			RES,FXD,CMPSN:4.7 OHM,5%,0.25M	01121	CB 47G5
A1R976	315-0512-00			RES,FXD,FILM:5.1K OHM,5%,0.25M	57668	NTR25J-E05K1
A1R978	315-0512-00			RES,FXD,FILM:5.1K OHM,5%,0.25M	57668	NTR25J-E05K1
A1RT236	307-0125-00			RES,THERMAL:500 OHM,10%,NTC	15454	1DB501K-220-EC
A1SW901	260-1849-03			SWITCH,PUSH:DPDT,4A,250VAC,W/COVER	80009	260-1849-03
A1T390	120-1401-00			XFMR,TRIGGER:LINE,1:1 TURNS RATIO	54937	DWI 500-2044
A1T906	120-1439-00			TRANSFORMER,RF:ENERGY STORAGE	54937	5002573
A1T944	120-1347-00			TRANSFORMER,RF:DRIVER SATURATING	54583	BDT-001
A1T948	120-1348-00	B010100	B010549	XFMR,PWR,SDN&SU:HIGH VOLTAGE	80009	120-1348-00
A1T948	120-1348-01	B010550	B014174	XFMR,PWR,SDN&SU:HIGH VOLTAGE	80009	120-1348-01
A1T948	120-1348-02	B014175	B015049	XFMR,PWR,SDN&SU:HIGH VOLTAGE	80009	120-1348-02
A1T948	120-1348-03	B015050		XFMR,PWR,SDN&SU:HIGH VOLTAGE	80009	120-1348-03

Component No.	Tektronix Part No.	Serial/Assembly No. Effective	Dscont	Name & Description	Mfr. Code	Mfr. Part No.
A1TP842	131-0589-00			TERMINAL,PIN:0.46 L X 0.025 SQ PH BRZ	22526	48283-029
A1TP900	131-0589-00			TERMINAL,PIN:0.46 L X 0.025 SQ PH BRZ	22526	48283-029
A1TP940	131-0589-00	B010100	B019899	TERMINAL,PIN:0.46 L X 0.025 SQ PH BRZ	22526	48283-029
A1TP940	131-0787-00	B019900		TERMINAL,PIN:0.64 L X 0.025 SQ PH BRZ	22526	47359-000
A1TP950	131-0589-00	B010100	B019899	TERMINAL,PIN:0.46 L X 0.025 SQ PH BRZ	22526	48283-029
A1TP950	131-0787-00	B019900		TERMINAL,PIN:0.64 L X 0.025 SQ PH BRZ	22526	47359-000
A1TP961	131-0589-00			TERMINAL,PIN:0.46 L X 0.025 SQ PH BRZ	22526	48283-029
A1U130	155-0274-00			MICROCKT,LINEAR:VERTICAL PREAMP	80009	155-0274-00
A1U180	155-0274-00			MICROCKT,LINEAR:VERTICAL PREAMP	80009	155-0274-00
A1U225	156-0067-00			MICROCKT,LINEAR:OPNL AMPL,SEL	04713	MC1741CP1
A1U310	156-0534-00			MICROCKT,LINEAR:DUAL DIFF AMPL	02735	CA3102E-98
A1U335	156-0534-00			MICROCKT,LINEAR:DUAL DIFF AMPL	02735	CA3102E-98
A1U350	156-1294-00			MICROCKT,LINEAR:NPN,5 TRANSISTOR ARRAY	02735	CA3127E
A1U426	156-0158-00			MICROCKT,LINEAR:DUAL OPNL AMPL	04713	MC1458P1/MC1458U
A1U460	156-0534-00			MICROCKT,LINEAR:DUAL DIFF AMPL	02735	CA3102E-98
A1U480	156-1641-00			MICROCKT,DGTL:ECL,QUAD 2-INPUT NOR GATE	04713	MC10H102(L OR P)
A1U502	156-1713-00			MICROCKT,DGTL:ECL,RETRIG MONOSTABLE MV	04713	MC10198(P OR L)
A1U504	156-1335-00			MICROCKT,DGTL:LSTTL,DUAL RETRIGGERABLE	07263	96LS02PCQR
A1U506	156-1639-00			MICROCKT,DGTL:ECL,DUAL D MA-SLAVE FF	04713	MC10H131(P OR L)
A1U532	156-1641-00			MICROCKT,DGTL:ECL,QUAD 2-INPUT NOR GATE	04713	MC10H102(L OR P)
A1U537	156-0721-02			MICROCKT,DGTL:QUAD ST 2-INP NAND GATES	18324	N74LS132(NBORFB)
A1U540	156-0388-03			MICROCKT,DGTL:DUAL D FLIP-FLOP	01295	SN74LS74ANP3
A1U555	156-0728-02			MICROCKT,DGTL:QUAD 2 INPUT GATE W/OC OUT	01295	SN74LS09NP3
A1U565	156-0384-02			MICROCKT,DGTL:QUAD 2-INP NAND GATE	07263	74LS03PCQR
A1U758	156-1149-00	B010100	B018680	MICROCKT,LINEAR:OPERATIONAL AMP,JFET INPUT	27014	LF351N/GLEA134
A1U758	156-1134-00	B018681	B022889	MICROCKT,LINEAR:OP AMPL,MOS/FET INPUT	02735	CA3140EX
A1U758	156-1149-00	B022890		MICROCKT,LINEAR:OPERATIONAL AMP,JFET INPUT	27014	LF351N/GLEA134
A1U930	156-1627-00			MICROCKT,LINEAR:PULSE WIDTH MODULATED CONT CIRCUIT,SWITCHING POWER SUPPLY,SCRN	12969	UC494ACN
A1U975	152-0806-00			SEMICOND DVC,DI:HV MULTR,4KVAC INPUT,12KVDC	12969	CMX647
A1VR200	152-0149-00			SEMICOND DVC,DI:ZEN,SI,10V,5%,0.4W,DO-7	15238	Z5406
A1VR645	152-0317-00			SEMICOND DVC,DI:ZEN,SI,6.2V,5%,0.25W,DO-7	04713	SZG20012
A1VR712	152-0508-00			SEMICOND DVC,DI:ZEN,SI,12.6V,5%,0.4W,DO-7	04713	SZ13294RL
A1VR764	152-0508-00	B010100	B016052	SEMICOND DVC,DI:ZEN,SI,12.6V,5%,0.4W,DO-7	04713	SZ13294RL
A1VR764	152-0702-00	B016053		SEMICOND DVC,DI:ZEN,SI,13V,2%,500MW,DO-7	04713	SZG30214RL
A1VR782	152-0243-00			SEMICOND DVC,DI:ZEN,SI,15V,5%,0.4W,DO-7	04713	SZ13203 (1N9658)
A1VR828	152-0514-00			SEMICOND DVC,DI:ZEN,SI,10V,1%,0.4W,DO-7	04713	SZG15RL
A1VR925	152-0166-00			SEMICOND DVC,DI:ZEN,SI,6.2V,5%,0.4W,DO-7	04713	SZ11738RL
A1VR935	152-0255-00			SEMICOND DVC,DI:ZEN,SI,51V,5%,0.4W,DO-7	04713	SZG35009K7
A1VR943	152-0317-00			SEMICOND DVC,DI:ZEN,SI,6.2V,5%,0.25W,DO-7	04713	SZG20012
A1W282	131-0566-00			BUS,COND:DUMMY RES,0.094 OD X 0.225L	24546	OMA 07
A1W283	131-0566-00			BUS,COND:DUMMY RES,0.094 OD X 0.225L	24546	OMA 07
A1W310	131-0566-00			BUS,COND:DUMMY RES,0.094 OD X 0.225L	24546	OMA 07
A1W335	131-0566-00			BUS,COND:DUMMY RES,0.094 OD X 0.225L	24546	OMA 07
A1W350	131-0566-00			BUS,COND:DUMMY RES,0.094 OD X 0.225L	24546	OMA 07
A1W351	131-0566-00			BUS,COND:DUMMY RES,0.094 OD X 0.225L	24546	OMA 07
A1W408	131-0566-00			BUS,COND:DUMMY RES,0.094 OD X 0.225L	24546	OMA 07
A1W410	131-0566-00			BUS,COND:DUMMY RES,0.094 OD X 0.225L	24546	OMA 07
A1W419	131-0566-00			BUS,COND:DUMMY RES,0.094 OD X 0.225L	24546	OMA 07
A1W428	131-0566-00			BUS,COND:DUMMY RES,0.094 OD X 0.225L	24546	OMA 07
A1W429	131-0566-00			BUS,COND:DUMMY RES,0.094 OD X 0.225L	24546	OMA 07
A1W494	131-0566-00			BUS,COND:DUMMY RES,0.094 OD X 0.225L	24546	OMA 07
A1W535	131-0566-00			BUS,COND:DUMMY RES,0.094 OD X 0.225L	24546	OMA 07
A1W537	131-0566-00			BUS,COND:DUMMY RES,0.094 OD X 0.225L	24546	OMA 07
A1W538	131-0566-00			BUS,COND:DUMMY RES,0.094 OD X 0.225L	24546	OMA 07
A1W555	131-0566-00			BUS,COND:DUMMY RES,0.094 OD X 0.225L	24546	OMA 07
A1W556	131-0566-00			BUS,COND:DUMMY RES,0.094 OD X 0.225L	24546	OMA 07
A1W558	131-0566-00			BUS,COND:DUMMY RES,0.094 OD X 0.225L	24546	OMA 07
A1W560	131-0566-00			BUS,COND:DUMMY RES,0.094 OD X 0.225L	24546	OMA 07

Component No.	Tektronix Part No.	Serial/Assembly No. Effective	Dscont	Name & Description	Mfr. Code	Mfr. Part No.
A1W570	131-0566-00	B010100	B012239	BUS,COND:DUMMY RES,0.094 OD X 0.225L	24546	OMA 07
A1W590	131-0566-00			BUS,COND:DUMMY RES,0.094 OD X 0.225L	24546	OMA 07
A1W591	131-0566-00			BUS,COND:DUMMY RES,0.094 OD X 0.225L	24546	OMA 07
A1W592	131-0566-00			BUS,COND:DUMMY RES,0.094 OD X 0.225L	24546	OMA 07
A1W602	131-0566-00			BUS,COND:DUMMY RES,0.094 OD X 0.225L	24546	OMA 07
A1W603	131-0566-00			BUS,COND:DUMMY RES,0.094 OD X 0.225L	24546	OMA 07
A1W634	131-0566-00			BUS,COND:DUMMY RES,0.094 OD X 0.225L	24546	OMA 07
A1W635	131-0566-00			BUS,COND:DUMMY RES,0.094 OD X 0.225L	24546	OMA 07
A1W648	131-0566-00			BUS,COND:DUMMY RES,0.094 OD X 0.225L	24546	OMA 07
A1W649	131-0566-00			BUS,COND:DUMMY RES,0.094 OD X 0.225L	24546	OMA 07
A1W732	131-0566-00			BUS,COND:DUMMY RES,0.094 OD X 0.225L	24546	OMA 07
A1W770	131-0566-00			BUS,COND:DUMMY RES,0.094 OD X 0.225L	24546	OMA 07
A1W780	131-0566-00			BUS,COND:DUMMY RES,0.094 OD X 0.225L	24546	OMA 07
A1W885	131-0566-00			BUS,COND:DUMMY RES,0.094 OD X 0.225L	24546	OMA 07
A1W954	131-0566-00			BUS,COND:DUMMY RES,0.094 OD X 0.225L	24546	OMA 07
A1W955	131-0566-00			BUS,COND:DUMMY RES,0.094 OD X 0.225L	24546	OMA 07
A1W956	131-0566-00			BUS,COND:DUMMY RES,0.094 OD X 0.225L	24546	OMA 07
A1W957	131-0566-00			BUS,COND:DUMMY RES,0.094 OD X 0.225L	24546	OMA 07
A1W959	131-0566-00			BUS,COND:DUMMY RES,0.094 OD X 0.225L	24546	OMA 07
A1W960	131-0566-00			BUS,COND:DUMMY RES,0.094 OD X 0.225L	24546	OMA 07
A1W961	131-0566-00			BUS,COND:DUMMY RES,0.094 OD X 0.225L	24546	OMA 07
A1W964	131-0566-00			BUS,COND:DUMMY RES,0.094 OD X 0.225L	24546	OMA 07
A1W965	131-0566-00			BUS,COND:DUMMY RES,0.094 OD X 0.225L	24546	OMA 07
A1W968	131-0566-00			BUS,COND:DUMMY RES,0.094 OD X 0.225L	24546	OMA 07
A1W971	131-0566-00			BUS,COND:DUMMY RES,0.094 OD X 0.225L	24546	OMA 07
A1W972	131-0566-00			BUS,COND:DUMMY RES,0.094 OD X 0.225L	24546	OMA 07
A1W974	131-0566-00			BUS,COND:DUMMY RES,0.094 OD X 0.225L	24546	OMA 07
A1W975	131-0566-00			BUS,COND:DUMMY RES,0.094 OD X 0.225L	24546	OMA 07
A1W976	131-0566-00			BUS,COND:DUMMY RES,0.094 OD X 0.225L	24546	OMA 07
A1W977	131-0566-00			BUS,COND:DUMMY RES,0.094 OD X 0.225L	24546	OMA 07
A1W979	131-0566-00			BUS,COND:DUMMY RES,0.094 OD X 0.225L	24546	OMA 07
A1W991	131-0566-00			BUS,COND:DUMMY RES,0.094 OD X 0.225L	24546	OMA 07
A1W992	131-0566-00			BUS,COND:DUMMY RES,0.094 OD X 0.225L	24546	OMA 07
A1W993	131-0566-00			BUS,COND:DUMMY RES,0.094 OD X 0.225L	24546	OMA 07
A1W995	131-0566-00			BUS,COND:DUMMY RES,0.094 OD X 0.225L	24546	OMA 07
A1W997	131-0566-00			BUS,COND:DUMMY RES,0.094 OD X 0.225L	24546	OMA 07
A1W998	131-0566-00			BUS,COND:DUMMY RES,0.094 OD X 0.225L	24546	OMA 07
A1W999	131-0566-00			BUS,COND:DUMMY RES,0.094 OD X 0.225L	24546	OMA 07
A1W9000	131-1817-00	B010100	B014174	BUS,CONDUCTOR:22AWG,BARE,2.25 L	80009	131-1817-00
A1W9000	131-3228-00	B014175		CONN,RCPT,ELEC:HEADER,1 X 20,0.1 SPACING (SPACING 1-20)	TK1483	082-2740-SS28
A1W9000	131-3228-01	B014175		CONN,RCPT,ELEC:HEADER,1 X 19,0.1 SPACING (SPACING 21-30)	TK1483	082-3040-SS28
A1W9040	195-7745-00			LEAD,ELECTRICAL:18 AWG,3.5 L,8-04	80009	195-7745-00
A1W9103	175-6138-00			CA ASSY,SP,ELEC:4,26 AWG,6.0 L,RIBBON	80009	175-6138-00
A1W9108	175-6138-00			CA ASSY,SP,ELEC:4,26 AWG,6.0 L,RIBBON	80009	175-6138-00
A1W9190	195-7747-00			LEAD,ELECTRICAL:18 AWG,3.5 L,8-19	80009	195-7747-00
A1W9440	175-6141-00			CA ASSY,SP,ELEC:4,26 AWG,7.0 L,RIBBON	80009	175-6141-00
A1W9700	175-8547-00	B010100	B012239	CA ASSY,SP,ELEC:10,26 AWG,7.0 L,RIBBON	80009	175-8547-00
A1W9700	175-6136-00	B012240	B013489	CA ASSY,SP,ELEC:10,26 AWG,7.0 L,RIBBON	80009	175-6136-00
A1W9700	175-9252-00	B013490		CABLE ASSY,RF:8,26 AWG/1,50 OHM COAX,8.0L	80009	175-9252-00
A1W9705	175-6137-00			CA ASSY,SP,ELEC:8,26 AWG,6.0 L,RIBBON	80009	175-6137-00
A1W9870	136-0202-08			SKT,PL-IN ELEK:ELECTRON TUBE,14 CONTACT	80009	136-0202-08
A1W9991	175-6139-00			CA ASSY,SP,ELEC:3,26 AWG,4.0 L,RIBBON	80009	175-6139-00

Component No.	Tektronix Part No.	Serial/Assembly No. Effective	Dscont	Name & Description	Mfr. Code	Mfr. Part No.
A2	670-7570-00	B010100	B012999	CIRCUIT BD ASSY:ATTEN	80009	670-7570-00
A2	670-7570-01	B013000	B014412	CIRCUIT BD ASSY:ATTEN	80009	670-7570-01
A2	670-7570-02	B014413	B016156	CIRCUIT BD ASSY:ATTENUATOR	80009	670-7570-02
A2	670-7570-03	B016157	B018643	CIRCUIT BD ASSY:ATTENUATOR	80009	670-7570-03
A2	670-7570-04	B018644		CIRCUIT BD ASSY:ATTENUATOR	80009	670-7570-04
A2AT1	307-1014-07			ATTENUATOR,FXD:100X 2%	80009	307-1014-07
A2AT2	307-1013-08			ATTENUATOR,FXD:10X U/W CAM SWITCH	80009	307-1013-08
A2AT51	307-1014-06			ATTENUATOR,FXD:100X	80009	307-1014-06
A2AT52	307-1013-00			ATTENUATOR,FXD:10X	80009	307-1013-00
A2C1	281-0214-00			CAP,VAR,CER DI:0.6-3PF,400V	52763	313613-140
A2C2	285-1132-02	B010100	B018643	CAP,FXD,PLASTIC:0.019UF,10%,600V,RADIAL LD	80009	285-1132-02
A2C2	285-1106-00	B018644		CAP,FXD,PLASTIC:0.022UF,20%,600V	14752	23081F223
A2C3	281-0182-00	B010100	B018643	CAP,VAR,PLASTIC:1.8-10PF,500V	TK1727	2222-809-05002
A2C3	281-0158-00	B018644		CAP,VAR,CER DI:7-45PF,25V	59660	518-006 G 7-45
A2C6	283-0000-00			CAP,FXD,CER DI:0.001UF,+100-0%,500V	59660	831-610-Y5U0102P
A2C7	281-0903-00	B018644		CAP,FXD,CER DI:3.9PF,100V	04222	MA101A3R9DAA
A2C9	281-0770-00	B010100	B018643	CAP,FXD,CER DI:1000PF,20%,100V	04222	MA101C102MAA
A2C9	281-0826-00	B018644		CAP,FXD,CER DI:2200PF,5%,100V	20932	401EM100AD222K
A2C10	283-0028-00	B010100	B018643	CAP,FXD,CER DI:0.0022UF,20%,50V	59660	0805585Y5S0222M
A2C10	283-0100-00	B018644		CAP,FXD,CER DI:0.0047UF,10%,200V	04222	SR306A472KAA
A2C13	281-0862-00			CAP,FXD,CER DI:0.001UF,+80-20%,100V	04222	MA101C10ZMAA
A2C17	281-0810-00			CAP,FXD,CER DI:5.6PF,+/-0.5PF,100V	04222	MA101A5R6DAA
A2C17	281-0862-00			CAP,FXD,CER DI:0.001UF,+80-20%,100V	04222	MA101C10ZMAA
A2C21	281-0773-00			CAP,FXD,CER DI:0.01UF,10%,100V	04222	MA201C103KAA
A2C26	281-0158-00			CAP,VAR,CER DI:7-45PF,25V	59660	518-006 G 7-45
A2C27	281-0810-00			CAP,FXD,CER DI:5.6PF,+/-0.5PF,100V	04222	MA101A5R6DAA
A2C30	281-0775-00			CAP,FXD,CER DI:0.1UF,20%,50V	04222	MA205E104MAA
A2C35	281-0862-00			CAP,FXD,CER DI:0.001UF,+80-20%,100V	04222	MA101C10ZMAA
A2C38	281-0862-00			CAP,FXD,CER DI:0.001UF,+80-20%,100V	04222	MA101C10ZMAA
A2C51	281-0214-00			CAP,VAR,CER DI:0.6-3PF,400V	52763	313613-140
A2C52	285-1132-02	B010100	B018643	CAP,FXD,PLASTIC:0.019UF,10%,600V,RADIAL LD	80009	285-1132-02
A2C52	285-1106-00	B018644		CAP,FXD,PLASTIC:0.022UF,20%,600V	14752	23081F223
A2C53	281-0182-00	B010100	B018643	CAP,VAR,PLASTIC:1.8-10PF,500V	TK1727	2222-809-05002
A2C53	281-0158-00	B018644		CAP,VAR,CER DI:7-45PF,25V	59660	518-006 G 7-45
A2C56	283-0000-00			CAP,FXD,CER DI:0.001UF,+100-0%,500V	59660	831-610-Y5U0102P
A2C57	281-0903-00	B018644		CAP,FXD,CER DI:3.9PF,100V	04222	MA101A3R9DAA
A2C59	281-0770-00	B010100	B018643	CAP,FXD,CER DI:1000PF,20%,100V	04222	MA101C102MAA
A2C59	281-0826-00	B018644		CAP,FXD,CER DI:2200PF,5%,100V	20932	401EM100AD222K
A2C60	283-0028-00	B010100	B018643	CAP,FXD,CER DI:0.0022UF,20%,50V	59660	0805585Y5S0222M
A2C60	283-0100-00	B018644		CAP,FXD,CER DI:0.0047UF,10%,200V	04222	SR306A472KAA
A2C63	281-0862-00			CAP,FXD,CER DI:0.001UF,+80-20%,100V	04222	MA101C10ZMAA
A2C67	281-0862-00			CAP,FXD,CER DI:0.001UF,+80-20%,100V	04222	MA101C10ZMAA
A2C71	281-0773-00			CAP,FXD,CER DI:0.01UF,10%,100V	04222	MA201C103KAA
A2C76	281-0158-00			CAP,VAR,CER DI:7-45PF,25V	59660	518-006 G 7-45
A2C80	281-0775-00			CAP,FXD,CER DI:0.1UF,20%,50V	04222	MA205E104MAA
A2C85	281-0862-00			CAP,FXD,CER DI:0.001UF,+80-20%,100V	04222	MA101C10ZMAA
A2C88	281-0862-00			CAP,FXD,CER DI:0.001UF,+80-20%,100V	04222	MA101C10ZMAA
A2C90	290-0523-00	B010100	B018643	CAP,FXD,ELCTLT:2.2UF,20%,20V	05397	T368A225M020AS
A2C90	290-0776-01	B018644		CAP,FXD,ELCTLT:22UF,+50%-10%,10V	55680	ULB1A220MAA1TD
A2C91	290-0523-00	B010100	B018643	CAP,FXD,ELCTLT:2.2UF,20%,20V	05397	T368A225M020AS
A2C91	290-0776-01	B018644		CAP,FXD,ELCTLT:22UF,+50%-10%,10V	55680	ULB1A220MAA1TD
A2C93	290-0776-00	B010100	B018643	CAP,FXD,ELCTLT:22UF,+50-10 %,10V	55680	ULA1A220TEA
A2C93	290-0776-01	B018644		CAP,FXD,ELCTLT:22UF,+50%-10%,10V	55680	ULB1A220MAA1TD
A2C94	281-0862-00			CAP,FXD,CER DI:0.001UF,+80-20%,100V	04222	MA101C10ZMAA
A2C96	290-0776-00	B010100	B018643	CAP,FXD,ELCTLT:22UF,+50-10 %,10V	55680	ULA1A220TEA
A2C96	290-0776-01	B018644		CAP,FXD,ELCTLT:22UF,+50%-10%,10V	55680	ULB1A220MAA1TD
A2C97	281-0862-00			CAP,FXD,CER DI:0.001UF,+80-20%,100V	04222	MA101C10ZMAA
A2CR7	152-0324-00			SEMICOND DVC,DI:SM,SI,35V,0.1A,DO-7	14552	MT5128
A2CR18	152-0141-02			SEMICOND DVC,DI:SM,SI,30V,150MA,30V,DO-35	03508	DA2527 (1N4152)

Component No.	Tektronix Part No.	Serial/Assembly No. Effective	Discont	Name & Description	Mfr. Code	Mfr. Part No.
A2CR57	152-0324-00			SEMICOND DVC,DI:SM,SI,35V,0.1A,DO-7	14552	MT5128
A2CR68	152-0141-02			SEMICOND DVC,DI:SM,SI,30V,150MA,30V,DO-35	03508	DA2527 (1N4152)
A2E90	119-1771-00	B010100	B018643	FERRITE BEAD AS:276-0532-00 W/22 AWG WIRE	80009	119-1771-00
A2E91	119-1771-00	B010100	B018643	FERRITE BEAD AS:276-0532-00 W/22 AWG WIRE	80009	119-1771-00
A2L90	120-0382-00	B018644		COIL,RF:210UH,+28%-43%,14 TURNS	80009	120-0382-00
A2L91	120-0382-00	B018644		COIL,RF:210UH,+28%-43%,14 TURNS	80009	120-0382-00
A2L93	120-0382-00			COIL,RF:210UH,+28%-43%,14 TURNS	80009	120-0382-00
A2L96	120-0382-00			COIL,RF:210UH,+28%-43%,14 TURNS	80009	120-0382-00
A2P2900	131-0608-00			TERMINAL,PIN:0.365 L X 0.025 BRZ GLD PL (QUANTITY OF 2)	22526	48283-036
A2P9103	131-0608-00			TERMINAL,PIN:0.365 L X 0.025 BRZ GLD PL (QUANTITY OF 4)	22526	48283-036
A2P9108	131-0608-00			TERMINAL,PIN:0.365 L X 0.025 BRZ GLD PL (QUANTITY OF 4)	22526	48283-036
A2P9200	131-0787-00			TERMINAL,PIN:0.64 L X 0.025 SQ PH BRZ (QUANTITY OF 2)	22526	47359-000
A2P9991	131-0608-00			TERMINAL,PIN:0.365 L X 0.025 BRZ GLD PL (QUANTITY OF 3)	22526	48283-036
A2Q13	151-1124-00			TRANSISTOR:JFE,N-CHAN,SI,SEL,TO-92	17856	J-2400
A2Q15	151-0711-00	B010100	B018643	TRANSISTOR:NPN,SI,TO-92	80009	151-0711-00
A2Q15	151-0711-02	B018644		TRANSISTOR:NPN,SI,TO-92	27014	X42094B
A2Q18	151-0711-00			TRANSISTOR:NPN,SI,TO-92	80009	151-0711-00
A2Q63	151-1124-00			TRANSISTOR:JFE,N-CHAN,SI,SEL,TO-92	17856	J-2400
A2Q65	151-0711-02	B018644		TRANSISTOR:NPN,SI,TO-92	27014	X42094B
A2Q68	151-0711-00			TRANSISTOR:NPN,SI,TO-92	80009	151-0711-00
A2R2	317-0105-00			RES,FXD,CMPSN:1M OHM,5%,0.125M	01121	BB1055
A2R3	321-0648-07	B010100	B018643	RES,FXD,FILM:500K OHM,0.1%,0.125M,TC=T9	19701	5033RE500K0B
A2R3	322-0614-07	B018644		RES,FXD,FILM:250K OHM,0.1%,0.25M,TC=T9	19701	5043RE250K0B
A2R4	317-0056-00	B010100	B018643	RES,FXD,CMPSN:5.6 OHM,5%,0.125M	01121	BB56G5
A2R4	317-0082-00	B018644		RES,FXD,CMPSN:8.2 OHM,5%,0.125M	01121	BB82G5
A2R5	321-0648-07	B010100	B018643	RES,FXD,FILM:500K OHM,0.1%,0.125M,TC=T9	19701	5033RE500K0B
A2R5	321-0469-07	B018644		RES,FXD,FILM:750K OHM,0.1%,0.125M,TC=T9	19701	5033RE750K0B
A2R6	317-0474-00	B010100	B012999	RES,FXD,CMPSN:470K OHM,5%,0.125M	01121	BB4745
A2R6	317-0105-00	B013000		RES,FXD,CMPSN:1M OHM,5%,0.125M	01121	BB1055
A2R7	315-0160-00	B010100	B019669	RES,FXD,FILM:16 OHM,5%,0.25M	19701	5043CX16R00J
A2R7	315-0180-00	B019670		RES,FXD,FILM:18 OHM,5%,0.25M (NOMINAL VALUE)	19701	5043CX18R00J
A2R7	315-0160-00	B019670		RES,FXD,FILM:16 OHM,5%,0.25M (SELECTED VALUE)	19701	5043CX16R00J
A2R8	315-0220-01	B010100	B018643	RES,FXD,CMPSN:22 OHM,5%,0.25M	01121	CB2205
A2R8	315-0620-02	B018644		RES,FXD,CMPSN:62 OHM,5%,0.25M	01121	CB6205
A2R9	315-0112-00	B010100	B018643	RES,FXD,FILM:1.1K OHM,5%,0.25M	19701	5043CX1K100J
A2R9	315-0432-00	B018644		RES,FXD,FILM:4.3K OHM,5%,0.25M	57668	NTR25J-E04K3
A2R10	311-1559-00	B010100	B018643	RES,VAR,NONWW:TRMR,10K OHM,0.5M	32997	3352T-1-103
A2R10	311-2238-00	B018644		RES,VAR,NONWW:TRMR,50K OHM,20%,0.5M LINEAR	TK1450	GF06UT 50 K
A2R11	315-0153-00	B010100	B018643	RES,FXD,FILM:15K OHM,5%,0.25M	19701	5043CX15K00J
A2R11	315-0102-00	B018644		RES,FXD,FILM:1K OHM,5%,0.25M	57668	NTR25JE01K0
A2R12	315-0360-00	B013000		RES,FXD,FILM:36 OHM,5%,0.25M	19701	5043CX36R00J
A2R13	315-0101-00			RES,FXD,FILM:100 OHM,5%,0.25M	57668	NTR25J-E 100E
A2R14	317-0161-00			RES,FXD,CMPSN:160 OHM,5%,0.125M	01121	BB1615
A2R15	315-0101-00			RES,FXD,FILM:100 OHM,5%,0.25M	57668	NTR25J-E 100E
A2R16	315-0162-00	B018644		RES,FXD,FILM:1.6K OHM,5%,0.25M	19701	5043CX1K600J
A2R17	315-0201-00			RES,FXD,FILM:200 OHM,5%,0.25M	57668	NTR25J-E200E
A2R18	315-0911-00			RES,FXD,FILM:910 OHM,5%,0.25M	57668	NTR25J-E910E
A2R19	307-0843-00			RES NTWK,FXD,FI:INPUT ATTENUATOR	80009	307-0843-00
A2R20	317-0332-00			RES,FXD,CMPSN:3.3K OHM,5%,0.125M	01121	BB3325
A2R21	315-0160-00			RES,FXD,FILM:16 OHM,5%,0.25M	19701	5043CX16R00J
A2R22	321-0210-00			RES,FXD,FILM:1.50K OHM,1%,0.125M,TC=T0	19701	5033ED1K50F
A2R23	321-0210-00			RES,FXD,FILM:1.50K OHM,1%,0.125M,TC=T0	19701	5033ED1K50F
A2R25	311-1568-00	B010100	B018643	RES,VAR,NONWW:TRMR,50 OHM,0.5M	32997	3352T-1-500

Component No.	Tektronix Part No.	Serial/Assembly No. Effective	Dscont	Name & Description	Mfr. Code	Mfr. Part No.
A2R25	311-2226-00	B018644		RES,VAR,NONWW:TRMR,50 OHM,20%,0.5W	TK1450	GF06UT 50 OHM
A2R26	311-0643-00			RES,VAR,NONWW:TRMR,50 OHM,0.5W	32997	3329H-L58-500
A2R27	315-0100-00			RES,FXD,FILM:10 OHM,5%,0.25W	19701	5043CX10RR00J
A2R29	321-0090-00			RES,FXD,FILM:84.5 OHM,1%,0.125W,TC=T0	91637	CMF55116684R50F
A2R30	315-0124-00			RES,FXD,FILM:120K OHM,5%,0.25W	19701	5043CX120K0J
A2R31	315-0750-00			RES,FXD,FILM:75 OHM,5%,0.25W	57668	NTR25J-E75E0
A2R33	311-1556-00	B010100	B018643	RES,VAR,NONWW:TRMR,50K OHM,0.5W	32997	3352T-DY7-503
A2R33	311-2238-00	B018644		RES,VAR,NONWW:TRMR,50K OHM,20%,0.5W LINEAR	TK1450	GF06UT 50 K
A2R34	315-0101-00			RES,FXD,FILM:100 OHM,5%,0.25W	57668	NTR25J-E 100E
A2R35	321-0144-00			RES,FXD,FILM:309 OHM,1%,0.125W,TC=T0	07716	CEAD309R0F
A2R37	315-0102-00			RES,FXD,FILM:1K OHM,5%,0.25W	57668	NTR25JE01K0
A2R38	321-0144-00			RES,FXD,FILM:309 OHM,1%,0.125W,TC=T0	07716	CEAD309R0F
A2R39	315-0242-00			RES,FXD,FILM:2.4K OHM,5%,0.25W	57668	NTR25J-E02K4
A2R41	321-0154-00	B010100	B014412	RES,FXD,FILM:392 OHM,1%,0.125W,TC=T0	07716	CEAD392R0F
A2R41	321-0151-00	B014413	B016291	RES,FXD,FILM:365 OHM,1%,0.125W,TC=T0	07716	CEAD365R0F
A2R41	315-0221-00	B016292		RES,FXD,FILM:220 OHM,5%,0.25W	57668	NTR25J-E220E
A2R42	315-0333-00			RES,FXD,FILM:33K OHM,5%,0.25W	57668	NTR25J-E33K0
A2R43	311-2179-00			RES,VAR,NONWW:PNL,10K OHM,10%,0.5W	32997	91Z1D-Z07-EA0037
A2R46	321-0256-07	B010100	B018643	RES,FXD,FILM:4.53K OHM,0.1%,0.125W,TC=T9	19701	5033RE4K530B
A2R46	321-0219-09	B018644		RES,FXD,FILM:1.87K OHM,1%,0.125W,TC=T9	01121	ADVISE
A2R47	311-1223-00	B010100	B018643	RES,VAR,NONWW:TRMR,250 OHM,0.5W	32997	3386F-T04-251
A2R47	311-2229-00	B010100		RES,VAR,NONWW:TRMR,250 OHM,20%,0.5W LINEAR	TK1450	GF06UT 250
A2R48	321-0259-00	B010100	B018643	RES,FXD,FILM:4.87K OHM,1%,0.125W,TC=T0	07716	CEAD48700F
A2R48	321-0276-09	B018644		RES,FXD,FILM:7.32K OHM,1%,0.125W,TC=T9	07716	CEAE73200F
A2R52	317-0105-00			RES,FXD,CMPSN:1M OHM,5%,0.125W	01121	BB1055
A2R53	321-1731-00	B010100	B018643	RES,FXD,FILM:500K OHM,1%,0.125W,TC=T0	19701	5033RD500K0F
A2R53	322-0614-00	B018644		RES,FXD,FILM:250K OHM,1%,0.25W,TC=T0	75042	CEBT0-2503F
A2R54	317-0056-00	B010100	B018643	RES,FXD,CMPSN:5.6 OHM,5%,0.125W	01121	BB56G5
A2R54	317-0082-00	B018644		RES,FXD,CMPSN:8.2 OHM,5%,0.125W	01121	BB82G5
A2R55	321-1731-00	B010100	B018643	RES,FXD,FILM:500K OHM,1%,0.125W,TC=T0	19701	5033RD500K0F
A2R55	321-0469-00	B018644		RES,FXD,FILM:750K OHM,1%,0.125W,TC=T0	80009	321-0469-00

A2R56	317-0474-00	B010100	B012999	RES,FXD,CMPSN:470K OHM,5%,0.125W	01121	BB4745
A2R56	317-0105-00	B013000		RES,FXD,CMPSN:1M OHM,5%,0.125W	01121	BB1055
A2R57	315-0160-00	B010100	B019669	RES,FXD,FILM:16 OHM,5%,0.25W	19701	5043CX16R00J
A2R57	315-0180-00	B019670		RES,FXD,FILM:18 OHM,5%,0.25W (NOMINAL VALUE)	19701	5043CX18R00J
A2R57	315-0160-00	B019670		RES,FXD,FILM:16 OHM,5%,0.25W (SELECTED VALUE)	19701	5043CX16R00J
A2R58	315-0220-01	B010100	B018643	RES,FXD,CMPSN:22 OHM,5%,0.25W	01121	CB2205
A2R58	315-0620-02	B018644		RES,FXD,CMPSN:62 OHM,5%,0.25W	01121	CB6205
A2R59	315-0112-00	B010100	B018643	RES,FXD,FILM:1.1K OHM,5%,0.25W	19701	5043CX1K100J
A2R59	315-0432-00	B018644		RES,FXD,FILM:4.3K OHM,5%,0.25W	57668	NTR25J-E04K3
A2R60	311-1559-00	B010100	B018643	RES,VAR,NONWW:TRMR,10K OHM,0.5W	32997	3352T-1-103
A2R60	311-2238-00	B018644		RES,VAR,NONWW:TRMR,50K OHM,20%,0.5W LINEAR	TK1450	GF06UT 50 K
A2R61	315-0153-00	B010100	B018643	RES,FXD,FILM:15K OHM,5%,0.25W	19701	5043CX15K00J
A2R61	315-0102-00	B018644		RES,FXD,FILM:1K OHM,5%,0.25W	57668	NTR25JE01K0
A2R62	315-0360-00	B013000		RES,FXD,FILM:36 OHM,5%,0.25W	19701	5043CX36R00J
A2R63	315-0101-00			RES,FXD,FILM:100 OHM,5%,0.25W	57668	NTR25J-E 100E
A2R64	317-0161-00			RES,FXD,CMPSN:160 OHM,5%,0.125W	01121	BB1615
A2R65	315-0101-00			RES,FXD,FILM:100 OHM,5%,0.25W	57668	NTR25J-E 100E
A2R66	315-0162-00	B018644		RES,FXD,FILM:1.6K OHM,5%,0.25W	19701	5043CX1K600J
A2R67	315-0201-00			RES,FXD,FILM:200 OHM,5%,0.25W	57668	NTR25J-E200E
A2R68	315-0911-00			RES,FXD,FILM:910 OHM,5%,0.25W	57668	NTR25J-E910E
A2R69	307-0843-00			RES NTWK,FXD,FI:INPUT ATTENUATOR	80009	307-0843-00
A2R71	315-0160-00			RES,FXD,FILM:16 OHM,5%,0.25W	19701	5043CX16R00J
A2R72	321-0210-00			RES,FXD,FILM:1.50K OHM,1%,0.125W,TC=T0	19701	5033ED1K50F
A2R73	321-0210-00			RES,FXD,FILM:1.50K OHM,1%,0.125W,TC=T0	19701	5033ED1K50F
A2R75	311-1568-00	B010100	B018643	RES,VAR,NONWW:TRMR,50 OHM,0.5W	32997	3352T-1-500
A2R75	311-2226-00	B018644		RES,VAR,NONWW:TRMR,50 OHM,20%,0.5W	TK1450	GF06UT 50 OHM

Component No.	Tektronix Part No.	Serial/Assembly No. Effective	Descont	Name & Description	Mfr. Code	Mfr. Part No.
A2R76	311-0643-00			RES,VAR,NONWW:TRMR,50 OHM,0.5W	32997	3329H-L58-500
A2R77	315-0100-00			RES,FXD,FILM:10 OHM,5%,0.25W	19701	5043CX10RR00J
A2R79	321-0090-00			RES,FXD,FILM:84.5 OHM,1%,0.125W,TC=T0	91637	CMF55116684R50F
A2R80	315-0124-00			RES,FXD,FILM:120K OHM,5%,0.25W	19701	5043CX120K0J
A2R81	315-0750-00			RES,FXD,FILM:75 OHM,5%,0.25W	57668	NTR25J-E75E0
A2R83	311-1556-00	B010100	B018643	RES,VAR,NONWW:TRMR,50K OHM,0.5W	32997	3352T-DY7-503
A2R83	311-2238-00	B018644		RES,VAR,NONWW:TRMR,50K OHM,20%,0.5W LINEAR	TK1450	GFD6UT 50 K
A2R84	315-0101-00			RES,FXD,FILM:100 OHM,5%,0.25W	57668	NTR25J-E 100E
A2R85	321-0144-00			RES,FXD,FILM:309 OHM,1%,0.125W,TC=T0	07716	CEA0309R0F
A2R87	315-0102-00			RES,FXD,FILM:1K OHM,5%,0.25W	57668	NTR25JED1K0
A2R88	321-0144-00			RES,FXD,FILM:309 OHM,1%,0.125W,TC=T0	07716	CEA0309R0F
A2R91	321-0154-00	B010100	B014412	RES,FXD,FILM:392 OHM,1%,0.125W,TC=T0	07716	CEA0392R0F
A2R91	321-0151-00	B014413	B016291	RES,FXD,FILM:365 OHM,1%,0.125W,TC=T0	07716	CEA0365R0F
A2R91	315-0221-00	B016292		RES,FXD,FILM:220 OHM,5%,0.25W	57668	NTR25J-E220E
A2R93	311-2179-00			RES,VAR,NONWW:PNL,10K OHM,10%,0.5W	32997	91Z1D-Z07-EA0037
A2R96	315-0472-00	B010100	B018643	RES,FXD,FILM:4.7K OHM,5%,0.25W	57668	NTR25J-E04K7
A2R96	315-0182-00	B018644		RES,FXD,FILM:1.8K OHM,5%,0.25W	57668	NTR25J-E1K8
A2R97	311-1224-00	B010100	B018643	RES,VAR,NONWW:TRMR,500 OHM,0.5W	32997	3386F-T04-501
A2R97	311-2230-00	B018644		RES,VAR,NONWW:TRMR,500 OHM,20%,0.50 LINEAR	TK1450	GFD6UT 500
A2R98	315-0512-00	B010100	B018643	RES,FXD,FILM:5.1K OHM,5%,0.25W	57668	NTR25J-E05K1
A2R98	315-0752-00	B018644		RES,FXD,FILM:7.5K OHM,5%,0.25W	57668	NTR25J-E07K5
A2R9100	315-0560-00			RES,FXD,FILM:56 OHM,5%,0.25W	57668	NTR25J-E56E0
A2R9510	315-0560-00			RES,FXD,FILM:56 OHM,5%,0.25W	57668	NTR25J-E56E0
A2S1	263-1040-00	B010100	B014999	SWITCH ASSEMBLY:CHANNEL 1 DIVISION	80009	263-1040-00
A2S1	263-1040-01	B014500		SWITCH ASSEMBLY:ACTUATOR,COUPLING	80009	263-1040-01
A2S10	263-1041-00			SWITCH ASSEMBLY:ACTUATOR,VOLTS/DIV	80009	263-1041-00
A2S51	263-1040-00	B010100	B014999	SWITCH ASSEMBLY:CHANNEL 1 DIVISION	80009	263-1040-00
A2S51	263-1040-01	B015000		SWITCH ASSEMBLY:ACTUATOR,COUPLING	80009	263-1040-01
A2S60	263-1041-00			SWITCH ASSEMBLY:ACTUATOR,VOLTS/DIV	80009	263-1041-00
A2U10	156-1134-01	B010100	B018643	MICROCKT,LINEAR:OP AMPL,MOS/FET INPUT	02735	CA3140AE-98
A2U10	156-2469-00	B018644		MICROCKT,DGTL:OP AMP	01295	TLC271ACP
A2U30	155-0273-00			MICROCKT,LINEAR:ATTEN AMPLIFIER	80009	155-0273-00
A2U60	156-1134-01	B010100	B018643	MICROCKT,LINEAR:OP AMPL,MOS/FET INPUT	02735	CA3140AE-98
A2U60	156-2469-00	B018644		MICROCKT,DGTL:OP AMP	01295	TLC271ACP
A2U80	155-0273-00			MICROCKT,LINEAR:ATTEN AMPLIFIER	80009	155-0273-00
A2VR10	152-0744-00	B018644		SEMICOND DVC,DI:ZEN,SI,3.6V,5%,0.4W,DO-7	15238	IN747ATK
A2VR60	152-0744-00	B018644		SEMICOND DVC,DI:ZEN,SI,3.6V,5%,0.4W,DO-7	15238	IN747ATK
A2W43	131-0566-00			BUS,COND:DUMMY RES,0.094 OD X 0.225L	24546	OMA 07
A2W93	131-0566-00			BUS,COND:DUMMY RES,0.094 OD X 0.225L	24546	OMA 07
A2W94	131-0566-00			BUS,COND:DUMMY RES,0.094 OD X 0.225L	24546	OMA 07
A2W96	131-0566-00			BUS,COND:DUMMY RES,0.094 OD X 0.225L	24546	OMA 07

Component No.	Tektronix Part No.	Serial/Assembly No. Effective	Dscont	Name & Description	Mfr. Code	Mfr. Part No.
A3	670-7574-00	B010100	B012248	CIRCUIT BD ASSY:FRONT PANEL	80009	670-7574-00
A3	670-7574-01	B012249	B012999	CIRCUIT BD ASSY:FRONT PANEL	80009	670-7574-01
A3	670-7574-02	B013000	B013489	CIRCUIT BD ASSY:FRONT PANEL	80009	670-7574-02
A3	670-7574-04	B013490	B014174	CIRCUIT BD ASSY:FRONT PANEL	80009	670-7574-04
A3	670-7574-05	B014175	B014885	CIRCUIT BD ASSY:FRONT PANEL	80009	670-7574-05
A3	670-7574-06	B014886		CIRCUIT BD ASSY:FRONT PANEL	80009	670-7574-06
A3C364	281-0862-00	B013490		CAP,FXD,CER DI:0.001UF,+80-20%,100V	04222	MA101C102MAA
A3C375	283-0363-00	B010100	B014885	CAP,FXD,CER DI:2.2PF,0.25%,2KV,DIP PHEN	56289	40C31105
A3C376	283-0006-00	B010100	B019899	CAP,FXD,CER DI:0.02UF,+80-20%,500V	59660	0841545Z5V00203Z
A3C376	285-1363-00	B019900		CAP,FXD,PLASTIC:0.022UF,20%,400V	80009	285-1363-00
A3C377	281-0576-00			CAP,FXD,CER DI:11PF,5%,500V	52763	2RDPLZ007 MPDJC
A3C379	283-0780-00			CAP,FXD,MICA DI:125PF,1%,500V	00853	D155F1250FD
A3C380	281-0578-00	B010100	B014885	CAP,FXD,CER DI:18PF,5%,500V	52763	2RDPLZ007 18PDJC
A3C380	283-0637-00	B014886		CAP,FXD,MICA DI:20PF,2.5%,500V	00853	D155E20000
A3C987	281-0773-00			CAP,FXD,CER DI:0.01UF,10%,100V	04222	MA201C103KAA
A3CR534	152-0141-02			SEMICOND DVC,DI:SM,SI,30V,150MA,30V,DO-35	03508	DA2527 (1N4152)
A3CR537	152-0141-02			SEMICOND DVC,DI:SM,SI,30V,150MA,30V,DO-35	03508	DA2527 (1N4152)
A3CR538	152-0141-02			SEMICOND DVC,DI:SM,SI,30V,150MA,30V,DO-35	03508	DA2527 (1N4152)
A3CR539	152-0141-02			SEMICOND DVC,DI:SM,SI,30V,150MA,30V,DO-35	03508	DA2527 (1N4152)
A3CR648	152-0141-02			SEMICOND DVC,DI:SM,SI,30V,150MA,30V,DO-35	03508	DA2527 (1N4152)
A3CR988	152-0141-02			SEMICOND DVC,DI:SM,SI,30V,150MA,30V,DO-35	03508	DA2527 (1N4152)
A3CR989	152-0141-02			SEMICOND DVC,DI:SM,SI,30V,150MA,30V,DO-35	03508	DA2527 (1N4152)
A3DS518	150-1029-00			LT EMITTING DIO:GREEN,565NM,35MA	58361	Q6480/MV5274C
A3J2102	136-0263-04			SOCKET,PIN TERM:U/M 0.025 SQ PIN	22526	75377-001
A3P8006	131-0608-00	B010100	B014885	TERMINAL,PIN:0.365 L X 0.025 BRZ 6LD PL (QUANTITY OF 2)	22526	48283-036
A3P8006	131-0589-00	B014886	B019899	TERMINAL,PIN:0.46 L X 0.025 SQ PH BRZ (QUANTITY OF 2)	22526	48283-029
A3P8006	131-0787-00	B019900		TERMINAL,PIN:0.64 L X 0.025 SQ PH BRZ (QUANTITY OF 2)	22526	47359-000
A3R89	315-0242-00			RES,FXD,FILM:2.4K OHM,5%,0.25W	57668	NTR25J-E02K4
A3R92	315-0333-00			RES,FXD,FILM:33K OHM,5%,0.25W	57668	NTR25J-E33K0
A3R111	321-0251-00			RES,FXD,FILM:4.02K OHM,1%,0.125W,TC=T0	19701	5033ED4K020F
A3R112	311-2178-00			RES,VAR,NONWW:CKT BD,500 OHM,10%,0.5W	12697	CW43473
A3R161	321-0251-00			RES,FXD,FILM:4.02K OHM,1%,0.125W,TC=T0	19701	5033ED4K020F
A3R162	311-2178-00			RES,VAR,NONWW:CKT BD,500 OHM,10%,0.5W	12697	CW43473
A3R201	315-0200-00	B010685		RES,FXD,FILM:20 OHM,5%,0.25W	19701	5043CX20R00J
A3R280	311-2147-00			RES,VAR,NONWW:CKT BD,5K OHM,20%,0.50W	12697	CW41769
A3R377	321-0807-00			RES,FXD,FILM:900K OHM,1%,0.125W,TC=T0	19701	5033RD900K0F
A3R378	321-0617-00			RES,FXD,FILM:111K OHM,1%,0.125W,TC=T0	19701	5043ED250K0F
A3R379	315-0220-00			RES,FXD,FILM:22 OHM,5%,0.25W	19701	5043CX22R00J
A3R380	321-0459-00			RES,FXD,FILM:590K OHM,1%,0.125W,TC=T0	19701	5043ED590K0F
A3R401	315-0200-00			RES,FXD,FILM:20 OHM,5%,0.25W	19701	5043CX20R00J
A3R438	311-2178-00			RES,VAR,NONWW:CKT BD,500 OHM,10%,0.5W	12697	CW43473
A3R519	315-0682-00			RES,FXD,FILM:6.8K OHM,5%,0.25W	57668	NTR25J-E06K8
A3R520	315-0912-00			RES,FXD,FILM:9.1K OHM,5%,0.25W	57668	NTR25J-E09K1
A3R602	311-2147-00			RES,VAR,NONWW:CKT BD,5K OHM,20%,0.50W	12697	CW41769
A3R726	311-2147-00			RES,VAR,NONWW:CKT BD,5K OHM,20%,0.50W	12697	CW41769
A3R982	311-1560-00			RES,VAR,NONWW:TRMR,5K OHM,0.5W	32997	3352T-1-502
A3R983	315-0241-00	B010100	B012999	RES,FXD,FILM:240 OHM,5%,0.25W	19701	5043CX240R0J
A3R983	315-0201-00	B013000		RES,FXD,FILM:200 OHM,5%,0.25W	57668	NTR25J-E200E
A3R985	315-0114-00			RES,FXD,FILM:110K OHM,5%,0.25W	19701	5043CX110K0J
A3R986	315-0434-00			RES,FXD,FILM:430K OHM,5%,0.25W	57668	NTR25J-E430K
A3R987	315-0124-00			RES,FXD,FILM:120K OHM,5%,0.25W	19701	5043CX120K0J
A3R988	315-0182-00			RES,FXD,FILM:1.8K OHM,5%,0.25W	57668	NTR25J-E1K8
A3R989	321-0329-00			RES,FXD,FILM:26.1K OHM,1%,0.125W,TC=T0	19701	5043ED26K10F
A3R990	321-0126-00			RES,FXD,FILM:200 OHM,1%,0.125W,TC=T0	19701	5033ED200R0F
A3R9376	315-0510-00	B010100	B014885	RES,FXD,FILM:51 OHM,5%,0.25W	19701	5043CX51R00J
A3R9376	315-0430-00	B014886		RES,FXD,FILM:43 OHM,5%,0.25W	19701	5043CX43R00J

Component No.	Tektronix Part No.	Serial/Assembly No. Effective	Dscont	Name & Description	Mfr. Code	Mfr. Part No.
A3S90	260-1995-00			SWITCH,PUSH:1 BUTTON,2 POLE,SLOPE	71590	K4035208
A3S200	260-2111-00			SWITCH,PUSH:SPOT,MOMENTARY	59821	ORDER BY DESCR
A3SZ26	260-2075-00			SWITCH,PUSH:SPOT,50VDC,500M AMP	80009	260-2075-00
A3S380	260-2033-00			SWITCH,SLIDE:DPTT,125V,0.5A	82389	ORDER BY DESCR
A3S390	260-2111-00			SWITCH,PUSH:SPOT,MOMENTARY	59821	ORDER BY DESCR
A3S392	260-2033-00			SWITCH,SLIDE:DPTT,125V,0.5A	82389	ORDER BY DESCR
A3S401	260-2110-00			SWITCH,PUSH:1 SPOT/2 DPOT	59821	ORDER BY DESCR
A3S460	260-2075-00			SWITCH,PUSH:SPOT,50VDC,500M AMP	80009	260-2075-00
A3S545	260-2033-00			SWITCH,SLIDE:DPTT,125V,0.5A	82389	ORDER BY DESCR
A3S550	260-2033-00			SWITCH,SLIDE:DPTT,125V,0.5A	82389	ORDER BY DESCR
A3S555	260-2033-00			SWITCH,SLIDE:DPTT,125V,0.5A	82389	ORDER BY DESCR
A3S602	260-2075-00			SWITCH,PUSH:SPOT,50VDC,500M AMP	80009	260-2075-00
A3S648	260-2033-00			SWITCH,SLIDE:DPTT,125V,0.5A	82389	ORDER BY DESCR
A3S701	260-2023-01			SWITCH,ROTARY:A/B SWEEP	82104	ORDER BY DESCR
A3U985	156-0067-00			MICROCKT,LINEAR:OPNL AMPL,SEL	04713	MC1741CP1
A3W89	131-0566-00			BUS,COND:DUMMY RES,0.094 OD X 0.225L	24546	OMA 07
A3W515	131-0566-00			BUS,COND:DUMMY RES,0.094 OD X 0.225L	24546	OMA 07
A3W534	131-0566-00			BUS,COND:DUMMY RES,0.094 OD X 0.225L	24546	OMA 07
A3W539	131-0566-00			BUS,COND:DUMMY RES,0.094 OD X 0.225L	24546	OMA 07
A3W630	131-0566-00			BUS,COND:DUMMY RES,0.094 OD X 0.225L	24546	OMA 07
A3W9520	175-8548-00			CA ASSY,SP,ELEC:2,26 AWG,4.0 L,RIBBON	80009	175-8548-00

Component No.	Tektronix Part No.	Serial/Assembly No. Effective	Dscont	Name & Description	Mfr. Code	Mfr. Part No.
A4	670-7572-00	B010100	B012239	CIRCUIT BD ASSY:TIMING	80009	670-7572-00
A4	670-7572-01	B012240	B012999	CIRCUIT BD ASSY:TIMING	80009	670-7572-01
A4	670-7572-03	B013000	B014885	CIRCUIT BD ASSY:TIMING	80009	670-7572-03
A4	670-7572-04	B014886		CIRCUIT BD ASSY:TIMING	80009	670-7572-04
A4C701	295-0194-00			CAP SET,MTCH:2,1UF,1.5%,50V,.01UF,1.5%,100V	80009	295-0194-00
A4C702	283-0674-00			CAP,FXD,MICA DI:85PF,1%,500V	00853	D155F850F0
A4C703	281-0207-00			CAP,VAR,PLASTIC:2-18PF,100V	52769	GXA 18000
A4C705	281-0813-00			CAP,FXD,CER DI:0.047UF,20%,50V	05397	C412C473M5V2CA
A4C706	281-0773-00			CAP,FXD,CER DI:0.01UF,10%,100V	04222	MA201C103KAA
A4C707	281-0773-00			CAP,FXD,CER DI:0.01UF,10%,100V	04222	MA201C103KAA
A4C708	281-0756-00			CAP,FXD,CER DI:2.2PF,+/-0.5PF,200V	04222	MA106A2R2DAA
A4C710	281-0813-00			CAP,FXD,CER DI:0.047UF,20%,50V	05397	C412C473M5V2CA
A4C712	283-0674-00			CAP,FXD,MICA DI:85PF,1%,500V	00853	D155F850F0
A4C713	281-0207-00			CAP,VAR,PLASTIC:2-18PF,100V	52769	GXA 18000
A4C714	281-0756-00			CAP,FXD,CER DI:2.2PF,+/-0.5PF,200V	04222	MA106A2R2DAA
A4C715	290-0776-00			CAP,FXD,ELCTLT:22UF,+50-10 %,10V	55680	ULA1A220TEA
A4C720	281-0775-00			CAP,FXD,CER DI:0.1UF,20%,50V	04222	MA205E104MAA
A4C722	290-0246-00	B013000		CAP,FXD,ELCTLT:3.3UF,10%,15V	12954	D3R3EA15K1
A4C724	290-0136-00			CAP,FXD,ELCTLT:2.2UF,20%,20V	05397	T322B225M020AS
A4C728	283-0203-00			CAP,FXD,CER DI:0.47UF,20%,50V	04222	SR305SC474MAA
A4C749	281-0775-00			CAP,FXD,CER DI:0.1UF,20%,50V	04222	MA205E104MAA
A4C750	290-0246-00			CAP,FXD,ELCTLT:3.3UF,10%,15V	12954	D3R3EA15K1
A4C751	281-0809-00			CAP,FXD,CER DI:200 PF,5%,100V	04222	MA101A201JAA
A4C752	281-0775-00			CAP,FXD,CER DI:0.1UF,20%,50V	04222	MA205E104MAA

A4C755	283-0107-00			CAP,FXD,CER DI:51PF,5%,200V	04222	SR206A510JAA
A4CR732	152-0141-02			SEMICOND DVC,DI:SM,SI,30V,150MA,30V,DO-35	03508	DA2527 (1N4152)
A4CR742	152-0141-02			SEMICOND DVC,DI:SM,SI,30V,150MA,30V,DO-35	03508	DA2527 (1N4152)
A4P9250	131-0787-00			TERMINAL,PIN:0.64 L X 0.025 SQ PH BRZ (QUANTITY OF 4)	22526	47359-000
A4P9700	131-0608-00	B010100	B019899	TERMINAL,PIN:0.365 L X 0.025 BRZ GLD PL (QUANTITY OF 10)	22526	48283-036
A4P9700	131-0787-00	B019900		TERMINAL,PIN:0.64 L X 0.025 SQ PH BRZ (QUANTITY OF 10)	22526	47359-000
A4P9705	131-0608-00	B010100	B019899	TERMINAL,PIN:0.365 L X 0.025 BRZ GLD PL (QUANTITY OF 8)	22526	48283-036
A4P9705	131-0787-00	B019900		TERMINAL,PIN:0.64 L X 0.025 SQ PH BRZ (QUANTITY OF 8)	22526	47359-000
A4Q701	151-0424-00			TRANSISTOR:NPN,SI,TO-92F	04713	SPS8246
A4Q704	151-1042-00			SEMICOND DVC SE:FET,SI,TO-92	04713	SPF627M2
A4Q706	151-0736-00			TRANSISTOR:NPN,SI,TO-92	80009	151-0736-00
A4Q709	151-0424-00			TRANSISTOR:NPN,SI,TO-92F	04713	SPS8246
A4Q710	151-1042-00			SEMICOND DVC SE:FET,SI,TO-92	04713	SPF627M2
A4Q712	151-0736-00			TRANSISTOR:NPN,SI,TO-92	80009	151-0736-00
A4Q732	151-0712-00			TRANSISTOR:PNP,SI,TO-92	04713	SPS8223
A4Q737	151-0188-00			TRANSISTOR:PNP,SI,TO-92	80009	151-0188-00
A4Q742	151-0712-00			TRANSISTOR:PNP,SI,TO-92	04713	SPS8223
A4R701	307-0780-01			RES NTWK,FXD,FI:TIMING	80009	307-0780-01
A4R702	322-0519-01			RES,FXD,FILM:2.49M OHM,0.5%,0.25M,TC=TO	07716	CCAD24903D
A4R703	315-0100-00			RES,FXD,FILM:10 OHM,5%,0.25M	19701	5043CX10RR00J
A4R705	315-0151-00			RES,FXD,FILM:150 OHM,5%,0.25M	57668	NTR25J-E150E
A4R707	301-0202-00			RES,FXD,FILM:2K OHM,5%,0.5M	19701	5053CX2K000J
A4R709	315-0100-00			RES,FXD,FILM:10 OHM,5%,0.25M	19701	5043CX10RR00J
A4R710	315-0151-00			RES,FXD,FILM:150 OHM,5%,0.25M	57668	NTR25J-E150E
A4R711	307-0780-01			RES NTWK,FXD,FI:TIMING	80009	307-0780-01
A4R713	301-0202-00			RES,FXD,FILM:2K OHM,5%,0.5M	19701	5053CX2K000J
A4R715	321-0308-00			RES,FXD,FILM:15.8K OHM,1%,0.125M,TC=TO	07716	CEAD 15801F
A4R716	321-0303-00			RES,FXD,FILM:14.0K OHM,1%,0.125M,TC=TO	07716	CEAD 14001F
A4R717	321-0306-00			RES,FXD,FILM:15.0K OHM,1%,0.125M,TC=TO	19701	5033ED15J00F
A4R718	321-0306-00			RES,FXD,FILM:15.0K OHM,1%,0.125M,TC=TO	19701	5033ED15J00F

Component No.	Tektronix Part No.	Serial/Assembly No. Effective	Dscont	Name & Description	Mfr. Code	Mfr. Part No.
A4R719	315-0330-00			RES,FXD,FILM:33 OHM,5%,0.25W	19701	5043CX33R00J
A4R721	311-2151-00			RES,VAR,NONWW:PNL,500 OHM,20%,0,5W,DPST	12697	CW43499
A4R722	315-0201-00			RES,FXD,FILM:200 OHM,5%,0.25W	57668	NTR25J-E200E
A4R724	315-0200-00			RES,FXD,FILM:20 OHM,5%,0.25W	19701	5043CX20R00J
A4R727	321-0246-00			RES,FXD,FILM:3.57K OHM,1%,0.125W,TC=T0	19701	5043ED3K570F
A4R728	321-0211-00			RES,FXD,FILM:1.54K OHM,1%,0.125W,TC=T0	07716	CEA015400F
A4R730	311-0635-00			RES,VAR,NONWW:TRMR,1K OHM,0.5W	32997	3329H-G48-102
A4R731	321-0244-00			RES,FXD,FILM:3.40K OHM,1%,0.125W,TC=T0	19701	5043ED3K400F
A4R732	321-0203-00			RES,FXD,FILM:1.27K OHM,1%,0.125W,TC=T0	07716	CEA012700F
A4R733	321-0203-00			RES,FXD,FILM:1.27K OHM,1%,0.125W,TC=T0	07716	CEA012700F
A4R737	315-0392-00			RES,FXD,FILM:3.9K OHM,5%,0.25W	57668	NTR25J-E03K9
A4R738	315-0512-00			RES,FXD,FILM:5.1K OHM,5%,0.25W	57668	NTR25J-E05K1
A4R740	311-0635-00			RES,VAR,NONWW:TRMR,1K OHM,0.5W	32997	3329H-G48-102
A4R741	321-0244-00			RES,FXD,FILM:3.40K OHM,1%,0.125W,TC=T0	19701	5043ED3K400F
A4R742	321-0203-00			RES,FXD,FILM:1.27K OHM,1%,0.125W,TC=T0	07716	CEA012700F
A4R743	321-0203-00			RES,FXD,FILM:1.27K OHM,1%,0.125W,TC=T0	07716	CEA012700F
A4R745	321-0177-00			RES,FXD,FILM:681 OHM,1%,0.125W,TC=T0	07716	CEA0681R0F
A4R747	315-0201-00			RES,FXD,FILM:200 OHM,5%,0.25W	57668	NTR25J-E200E
A4R748	315-0113-00			RES,FXD,FILM:11K OHM,5%,0.25W	19701	5043CX11K00J
A4R749	311-1560-00	B010100	B013599	RES,VAR,NONWW:TRMR,5K OHM,0.5W	32997	3352T-1-502
A4R749	311-1917-00	B013600		RES,VAR,NONWW:TRMR,5K OHM,10%,0.5 W	32997	3386C-T07-502
A4R750	315-0113-00			RES,FXD,FILM:11K OHM,5%,0.25W	19701	5043CX11K00J
A4R751	321-0326-00			RES,FXD,FILM:24.3K OHM,1%,0.125W,TC=T0	19701	5043ED24K30F
A4R752	315-0100-00			RES,FXD,FILM:10 OHM,5%,0.25W	19701	5043CX10RR00J
A4R753	321-0216-00			RES,FXD,FILM:1.74K OHM,1%,0.125W,TC=T0	07716	CEA017400F
A4R754	311-0622-00			RES,VAR,NONWW:TRMR,100 OHM,0.5W	32997	3329H-L58-101
A4R755	315-0121-00			RES,FXD,FILM:120 OHM,5%,0.25W	19701	5043CX120R0J
A4RT715	307-0125-00			RES,THERMAL:500 OHM,10%,NTC	15454	1D8501K-220-EC
A4S701	260-2023-01	B010100	B015570	SWITCH,ROTARY:A/B SWEEP	82104	ORDER BY DESCR
A4S701	260-2023-02	B015571		SWITCH,ROTARY:TIMING,A/B SWEEP	80009	260-2023-02

A4U715	156-0067-00	MICROCKT,LINEAR:OPNL AMPL,SEL	04713	MC1741CP1
A4U750	156-1150-00	MICROCKT,LINEAR:VOLTAGE REGULATOR,NEGATIVE	04713	MC79L05ACP
A4U760	155-0124-00	MICROCKT,LINEAR:HORIZ PREAMP	80009	155-0124-00
A4VR720	152-0744-00	SEMICOND DVC,DI:ZEN,SI,3.6V,5%,0.4W,DO-7	15238	IN747ATK
A4VR746	152-0662-00	SEMICOND DVC,DI:ZEN,SI,5V,1%,400MW,DO-7	04713	SZG195RL
A4VR749	152-0744-00	SEMICOND DVC,DI:ZEN,SI,3.6V,5%,0.4W,DO-7	15238	IN747ATK
A4W709	131-0566-00	BUS,COND:DUMMY RES,0.094 OD X 0.225L	24546	OWA 07

Component No.	Tektronix Part No.	Serial/Assembly No. Effective	Dscont	Name & Description	Mfr. Code	Mfr. Part No.
A5	670-7573-00	B010100	B012239	CIRCUIT BD ASSY:ALTERNATE SWEEP	80009	670-7573-00
A5	670-7573-01	B012240	B014885	CIRCUIT BD ASSY:ALTERNATE SWP	80009	670-7573-01
A5	670-7573-03	B014886		CIRCUIT BD ASSY:ALTERNATE SWEEP	80009	670-7573-03
A5C610	281-0862-00			CAP,FXD,CER DI:0.001UF,+80-20%,100V	04222	MA101C102MAA
A5C624	281-0826-00			CAP,FXD,CER DI:2200PF,5%,100V	20932	401EM100AD222K
A5C627	281-0893-00	B010100	B012239	CAP,FXD,CER DI:4.7PF,+/-0.5PF,100V	04222	MA101A4R7DAA
A5C627	281-0903-00	B012240	B014885	CAP,FXD,CER DI:3.9PF,100V	04222	MA101A3R9DAA
A5C627	281-0893-00	B014886		CAP,FXD,CER DI:4.7PF,+/-0.5PF,100V	04222	MA101A4R7DAA
A5C643	281-0811-00	B010100	B012239	CAP,FXD,CER DI:10PF,10%,100V	04222	MA101A100KAA
A5C643	281-0904-00	B012240		CAP,FXD,CER DI:12PF,10%	04222	MA101A120KAA
A5C655	281-0773-00			CAP,FXD,CER DI:0.01UF,10%,100V	04222	MA201C103KAA
A5C659	281-0773-00			CAP,FXD,CER DI:0.01UF,10%,100V	04222	MA201C103KAA
A5C661	281-0759-00	B020206		CAP,FXD,CER DI:22PF,10%,100V	04222	MA101A220KAA
A5C665	281-0810-00			CAP,FXD,CER DI:5.6PF,+/-0.5PF,100V	04222	MA101A5R6DAA
A5C667	281-0785-00			CAP,FXD,CER DI:68PF,10%,100V	04222	MA101A680KAA
A5C671	281-0851-00	B010100	B020205	CAP,FXD,CER DI:180PF,5%,100VDC	04222	MA101A181JAA
A5C672	281-0759-00			CAP,FXD,CER DI:22PF,10%,100V	04222	MA101A220KAA
A5C690	281-0772-00			CAP,FXD,CER DI:4700PF,10%,100V	04222	MA201C472KAA
A5C693	290-0776-00			CAP,FXD,ELCTLT:22UF,+50-10 %,10V	55680	ULA1A220TEA
A5C694	281-0775-00			CAP,FXD,CER DI:0.1UF,20%,50V	04222	MA205E104MAA
A5CR680	152-0141-02			SEMICOND DVC,DI:SW,SI,30V,150MA,30V,DO-35	03508	DA2527 (1N4152)
A5CR685	152-0141-02			SEMICOND DVC,DI:SW,SI,30V,150MA,30V,DO-35	03508	DA2527 (1N4152)
A5CR816	152-0153-00			SEMICOND DVC,DI:SW,SI,10V,50MA,.DO-7	07263	FD7003
A5CR817	152-0141-02			SEMICOND DVC,DI:SW,SI,30V,150MA,30V,DO-35	03508	DA2527 (1N4152)
A5L662	120-0382-00	B020206		COIL,RF:210UH,+28%-43%,14 TURNS	80009	120-0382-00
A5P2100	131-0608-00	B010100	B019899	TERMINAL,PIN:0.365 L X 0.025 BRZ GLD PL (QUANTITY OF 4)	22526	48283-036
A5P2100	131-0787-00	B019900		TERMINAL,PIN:0.64 L X 0.025 SQ PH BRZ (QUANTITY OF 4) (QUANITY OF 4)	22526	47359-000

A5P2200	131-0608-00	B010100	B019899	TERMINAL,PIN:0.365 L X 0.025 BRZ GLD PL (QUANTITY OF 6)	22526	48283-036
A5P2200	131-0787-00	B019900		TERMINAL,PIN:0.64 L X 0.025 SQ PH BRZ (QUANTITY OF 6)	22526	47359-000
A5Q619	151-0712-00			TRANSISTOR:PNP,SI,TO-92	04713	SPS8223
A5Q620	151-0712-00			TRANSISTOR:PNP,SI,TO-92	04713	SPS8223
A5Q630	151-0369-00			TRANSISTOR:PNP,SI,X-55	04713	SPS8273
A5Q631	151-0369-00			TRANSISTOR:PNP,SI,X-55	04713	SPS8273
A5Q637	151-0276-00			TRANSISTOR:PNP,SI,TO-92	04713	SPS8025
A5Q643	151-0190-00			TRANSISTOR:NPN,SI,TO-92	80009	151-0190-00
A5Q680	151-0198-00			TRANSISTOR:SELECTED	04713	SPS8802-1
A5Q685	151-0198-00			TRANSISTOR:SELECTED	04713	SPS8802-1
A5R604	315-0242-00			RES,FXD,FILM:2.4K OHM,5%,0.25W	57668	NTR25J-E02K4
A5R605	321-0203-00			RES,FXD,FILM:1.27K OHM,1%,0.125W,TC=T0	07716	CEAD12700F
A5R606	321-0201-00			RES,FXD,FILM:1.21K OHM,1%,0.125W,TC=T0	19701	5043ED1K210F
A5R609	315-0222-00			RES,FXD,FILM:2.2K OHM,5%,0.25W	57668	NTR25J-E02K2
A5R610	315-0241-00			RES,FXD,FILM:240 OHM,5%,0.25W	19701	5043CX240R0J
A5R611	315-0470-00			RES,FXD,FILM:47 OHM,5%,0.25W	57668	NTR25J-E47E0
A5R614	315-0302-00			RES,FXD,FILM:3K OHM,5%,0.25W	57668	NTR25J-E03K0
A5R616	321-0207-00			RES,FXD,FILM:1.40K OHM,1%,0.125W,TC=T0	19701	5033ED1K400F
A5R617	321-0197-00			RES,FXD,FILM:1.10K OHM,1%,0.125W,TC=T0	07716	CEAD11000F
A5R619	321-0092-00			RES,FXD,FILM:88.7 OHM,1%,0.125W,TC=T0	91637	CMF55116G88R70F
A5R620	321-0090-00			RES,FXD,FILM:84.5 OHM,1%,0.125W,TC=T0	91637	CMF55116G84R50F
A5R621	315-0271-00			RES,FXD,FILM:270 OHM,5%,0.25W	57668	NTR25J-E270E
A5R623	315-0910-00	B010100	B012239	RES,FXD,FILM:91 OHM,5%,0.25W	19701	5043CX91R00J
A5R623	315-0820-00	B012240		RES,FXD,FILM:82 OHM,5%,0.25W	57668	NTR25J-E82E0
A5R624	301-0360-00	B010100	B014885	RES,FXD,FILM:36 OHM,5%,0.5W	01121	EB3605
A5R624	301-0430-00	B014886		RES,FXD,FILM:43 OHM,5%,0.5W	19701	5053CX43R00J
A5R625	315-0431-00			RES,FXD,FILM:430 OHM,5%,0.25W	19701	5043CX430R0J
A5R626	315-0431-00			RES,FXD,FILM:430 OHM,5%,0.25W	19701	5043CX430R0J

Component No.	Tektronix Part No.	Serial/Assembly No. Effective	Dscont	Name & Description	Mfr. Code	Mfr. Part No.
A5R627	311-1921-00	B010100	B014885	RES,VAR,NONWW:TRMR,250 OHM,10%,0.5 W	32997	3386C-T07-251
A5R627	311-1236-00	B014886	B016072	RES,VAR,NONWW:TRMR,250 OHM,0.5W	32997	3386X-T07-251
A5R627	311-1248-00	B016073		RES,VAR,NONWW:TRMR,500 OHM,0.5W	32997	3386X-T07-501
A5R629	315-0471-00	B010100	B014885	RES,FXD,FILM:470 OHM,5%,0.25W	57668	NTR25J-E470E
A5R630	315-0471-00			RES,FXD,FILM:470 OHM,5%,0.25W	57668	NTR25J-E470E
A5R631	315-0241-00			RES,FXD,FILM:240 OHM,5%,0.25W	19701	5043CX240R0J
A5R632	315-0181-00			RES,FXD,FILM:180 OHM,5%,0.25W	57668	NTR25J-E180E
A5R633	315-0302-00			RES,FXD,FILM:3K OHM,5%,0.25W	57668	NTR25J-E03K0
A5R634	315-0201-00			RES,FXD,FILM:200 OHM,5%,0.25W	57668	NTR25J-E200E
A5R635	315-0470-00			RES,FXD,FILM:47 OHM,5%,0.25W	57668	NTR25J-E47E0
A5R637	315-0104-00			RES,FXD,FILM:100K OHM,5%,0.25W	57668	NTR25J-E100K
A5R638	315-0102-00			RES,FXD,FILM:1K OHM,5%,0.25W	57668	NTR25JE01K0
A5R640	315-0114-00			RES,FXD,FILM:110K OHM,5%,0.25W	19701	5043CX110K0J
A5R642	321-0314-00			RES,FXD,FILM:18.2K OHM,1%,0.125W,TC=T0	19701	5043ED18K20F
A5R643	321-0322-00			RES,FXD,FILM:22.1K OHM,0.1%,0.125W,TC=T0	19701	5033ED22K10F
A5R644	315-0512-00			RES,FXD,FILM:5.1K OHM,5%,0.25W	57668	NTR25J-E05K1
A5R651	321-0277-00			RES,FXD,FILM:7.50K OHM,1%,0.125W,TC=T0	24546	N055D7501F
A5R652	311-1238-00			RES,VAR,NONWW:TRMR,5K OHM,0.5W	32997	3386X-DY6-502
A5R653	321-0289-00			RES,FXD,FILM:10.0K OHM,1%,0.125W,TC=T0	19701	5033ED10K0F
A5R657	315-0102-00			RES,FXD,FILM:1K OHM,5%,0.25W	57668	NTR25JE01K0
A5R660	315-0471-00			RES,FXD,FILM:470 OHM,5%,0.25W	57668	NTR25J-E470E
A5R661	315-0302-00	B020206		RES,FXD,FILM:3K OHM,5%,0.25W	57668	NTR25J-E03K0
A5R662	315-0392-00			RES,FXD,FILM:3.9K OHM,5%,0.25W	57668	NTR25J-E03K9
A5R663	315-0102-00			RES,FXD,FILM:1K OHM,5%,0.25W	57668	NTR25JE01K0
A5R664	315-0392-00			RES,FXD,FILM:3.9K OHM,5%,0.25W	57668	NTR25J-E03K9
A5R665	315-0204-00			RES,FXD,FILM:200K OHM,5%,0.25W	19701	5043CX200K0J
A5R666	315-0221-00			RES,FXD,FILM:220 OHM,5%,0.25W	57668	NTR25J-E220E
A5R667	315-0151-00			RES,FXD,FILM:150 OHM,5%,0.25W	57668	NTR25J-E150E
A5R670	315-0512-00			RES,FXD,FILM:5.1K OHM,5%,0.25W	57668	NTR25J-E05K1
A5R671	315-0681-00	B010100	B020205	RES,FXD,FILM:680 OHM,5%,0.25W	57668	NTR25J-E680E
A5R672	315-0331-00			RES,FXD,FILM:330 OHM,5%,0.25W	57668	NTR25J-E330E
A5R674	315-0512-00			RES,FXD,FILM:5.1K OHM,5%,0.25W	57668	NTR25J-E05K1
A5R677	315-0471-00			RES,FXD,FILM:470 OHM,5%,0.25W	57668	NTR25J-E470E
A5R679	315-0201-00			RES,FXD,FILM:200 OHM,5%,0.25W	57668	NTR25J-E200E
A5R690	315-0100-00			RES,FXD,FILM:10 OHM,5%,0.25W	19701	5043CX10RR00J
A5R693	307-0106-00			RES,FXD,CMPSN:4.7 OHM,5%,0.25W	01121	CB 47G5
A5R816	315-0562-00			RES,FXD,FILM:5.6K OHM,5%,0.25W	57668	NTR25J-E05K6
A5R817	315-0302-00			RES,FXD,FILM:3K OHM,5%,0.25W	57668	NTR25J-E03K0
A5U605	156-0534-00			MICROCKT,LINEAR:DUAL DIFF AMPL	02735	CA3102E-98
A5U625	156-1641-00	B010100	B012239	MICROCKT,DGTL:ECL,QUAD 2-INPUT NOR GATE	04713	MC10H102(L OR P)
A5U625	156-0205-03	B012240	B014885	MICROCKT,DGTL:ECL,QUAD 2-INPUT NOR GATE	04713	MC10102 L OR P
A5U625	156-0182-03	B014886		MICROCKT,DGTL:ECL,TRIPLE 2-3-2 INPUT GATE	04713	MC10105 P OR L
A5U655	156-1126-00			MICROCKT,LINEAR:VOLTAGE COMPARATOR	01295	LM311P
A5U660	156-0385-02			MICROCKT,DGTL:HEX INVERTER	07263	74LS04PCQR
A5U665	156-0382-02			MICROCKT,DGTL:QUAD 2 INP NAND GATE BURN	18324	N74LS00NB
A5U670	156-1611-00			MICROCKT,DGTL:DUAL D TYPE EDGE-TRIGRD FF	80009	156-1611-00
A5U680	156-0382-02			MICROCKT,DGTL:QUAD 2 INP NAND GATE BURN	18324	N74LS00NB
A5VR624	152-0195-00			SEMICOND DVC,DI:ZEN,SI,5.1V,5%,0.4W,DO-7	04713	SZ11755RL
A5VR660	152-0195-00			SEMICOND DVC,DI:ZEN,SI,5.1V,5%,0.4W,DO-7	04713	SZ11755RL
A5W637	131-0566-00			BUS,COND:DUMMY RES,0.094 OD X 0.225L	24546	OWA 07
A5W638	131-0566-00			BUS,COND:DUMMY RES,0.094 OD X 0.225L	24546	OWA 07
A5W643	131-0566-00			BUS,COND:DUMMY RES,0.094 OD X 0.225L	24546	OWA 07
A5W655	131-0566-00			BUS,COND:DUMMY RES,0.094 OD X 0.225L	24546	OWA 07
A5W662	131-0566-00	B010100	B020205	BUS,COND:DUMMY RES,0.094 OD X 0.225L	24546	OWA 07
A5W670	131-0566-00			BUS,COND:DUMMY RES,0.094 OD X 0.225L	24546	OWA 07
A5W671	131-0566-00	B020206		BUS,COND:DUMMY RES,0.094 OD X 0.225L	24546	OWA 07
A5W674	131-0566-00			BUS,COND:DUMMY RES,0.094 OD X 0.225L	24546	OWA 07
A5W677	131-0566-00			BUS,COND:DUMMY RES,0.094 OD X 0.225L	24546	OWA 07
A5W678	131-0566-00			BUS,COND:DUMMY RES,0.094 OD X 0.225L	24546	OWA 07

Component No.	Tektronix Part No.	Serial/Assembly No. Effective	Discont	Name & Description	Mfr. Code	Mfr. Part No.
A5W690	131-0566-00			BUS,COND:DUMMY RES,0.094 OD X 0.225L	24546	OMA 07
A5W695	131-0566-00			BUS,COND:DUMMY RES,0.094 OD X 0.225L	24546	OMA 07
A5W696	131-0566-00			BUS,COND:DUMMY RES,0.094 OD X 0.225L	24546	OMA 07
A5W698	131-0566-00			BUS,COND:DUMMY RES,0.094 OD X 0.225L	24546	OMA 07
A5W9401	131-0589-00	B010100	B019899	TERMINAL,PIN:0.46 L X 0.025 SQ PH BRZ (QUANTITY OF 27)	22526	48283-029
A5W9401	131-0787-00	B019900		TERMINAL,PIN:0.64 L X 0.025 SQ PH BRZ (QUANTITY OF 27)	22526	47359-000

Component No.	Tektronix Part No.	Serial/Assembly No. Effective	Dscont	Name & Description	Mfr. Code	Mfr. Part No.
A6	670-7615-00			CIRCUIT BD ASSY:EMI FILTER	80009	670-7615-00
A6C900	285-1252-00			CAP,FXD,PLASTIC:0.15UF,10%,250VAC	05243	F1772-415-2000
A6C902	285-1192-00			CAP,FXD,PPR DI:0.0022 UF,20%,250VAC	TK0515	PME271Y510
A6C903	285-1192-00			CAP,FXD,PPR DI:0.0022 UF,20%,250VAC	TK0515	PME271Y510
A6R900	301-0474-00			RES,FXD,FILM:470K OHM,5%,0.5W	19701	5053CX470K0J
A6R901	301-0512-00			RES,FXD,FILM:5.1K OHM,5%,0.5W	19701	5053CX5K100J
A6R903	301-0331-00	B010100	B016384	RES,FXD,FILM:330 OHM,5%,0.5W	19701	5053CX330R0J
A6R903	301-0131-00	B016385		RES,FXD,FILM:130 OHM,5%,0.5W	19701	5053CX130R0J
A6RT901	307-0863-00			RES,THERMAL:10 OHM,10%,NTC	15454	SG-13S
A6T901	120-1449-00			TRANSFORMER,RF:COMMON MODE,2.7MH,2A	02113	P104
A6T903	120-1455-00			TRANSFORMER,RF:DIFFERENTIAL MODE,POT CORE	TK1421	120-1455-00
A6VR901	307-0456-00			RES,V SENSITIVE:250VAC,15W,METAL OXIDE	03508	MOV-V250LA15A
A6W9011	196-0531-00			LEAD,ELECTRICAL:18 AWG,3.0 L,8-01	80009	196-0531-00
A6W9091	196-0505-00			LEAD,ELECTRICAL:18 AWG,3.0 L,8-9	80009	196-0505-00

Component No.	Tektronix Part No.	Serial/Assembly No. Effective	Dscont	Name & Description	Mfr. Code	Mfr. Part No.
A10	670-7421-00	B010100	B013489	CIRCUIT BD ASSY:COUNTER/TIMER/MULTIMETER (STANDARD INSTRUMENT ONLY)	80009	670-7421-00
A10	670-7421-02	B013490	B014069	CIRCUIT BD ASSY:PARTIAL COUNTER (STANDARD INSTRUMENT ONLY)	80009	670-7421-02
A10	670-7421-01	B014070	B018231	CIRCUIT BD ASSY:COUNTER,PARTIAL (STANDARD INSTRUMENT ONLY)	80009	670-7421-01
A10	670-7421-03	B018232		CIRCUIT BD ASSY:COUNTER,PARTIAL (STANDARD INSTRUMENT ONLY)	80009	670-7421-03
A10C1000	290-0743-00			CAP,FXD,ELCTLT:100UF,+50%-10%,16V	54473	ECE-B16V100L
A10C1001	281-0798-00			CAP,FXD,CER DI:51PF,1%,100V	04222	MA101A510GAA
A10C1002	281-0775-00			CAP,FXD,CER DI:0.1UF,20%,50V	04222	MA205E104MAA
A10C1003	281-0775-00			CAP,FXD,CER DI:0.1UF,20%,50V	04222	MA205E104MAA
A10C1004	281-0775-00			CAP,FXD,CER DI:0.1UF,20%,50V	04222	MA205E104MAA
A10C1100	281-0775-00			CAP,FXD,CER DI:0.1UF,20%,50V	04222	MA205E104MAA
A10C1101	281-0775-00			CAP,FXD,CER DI:0.1UF,20%,50V	04222	MA205E104MAA
A10C1200	281-0775-00			CAP,FXD,CER DI:0.1UF,20%,50V	04222	MA205E104MAA
A10C1201	281-0775-00			CAP,FXD,CER DI:0.1UF,20%,50V	04222	MA205E104MAA
A10C1204	281-0775-00			CAP,FXD,CER DI:0.1UF,20%,50V	04222	MA205E104MAA
A10C1300	281-0786-00			CAP,FXD,CER DI:150PF,10%,100V	04222	MA101A151KAA
A10C1301	281-0773-00			CAP,FXD,CER DI:0.01UF,10%,100V	04222	MA201C103KAA
A10C1302	281-0775-00			CAP,FXD,CER DI:0.1UF,20%,50V	04222	MA205E104MAA
A10C1303	281-0775-00			CAP,FXD,CER DI:0.1UF,20%,50V	04222	MA205E104MAA
A10C1304	281-0812-00	B010100	B014069	CAP,FXD,CER DI:1000PF,10%,100V	04222	MA101C102KAA
A10C1304	283-0000-00	B014070	B018231	CAP,FXD,CER DI:0.001UF,+100-0%,500V	59660	831-610-Y5U0102P
A10C1304	281-0812-00	B018232		CAP,FXD,CER DI:1000PF,10%,100V	04222	MA101C102KAA
A10C1306	281-0773-00			CAP,FXD,CER DI:0.01UF,10%,100V	04222	MA201C103KAA
A10C1307	281-0798-00			CAP,FXD,CER DI:51PF,1%,100V	04222	MA101A510GAA
A10C1308	281-0814-00			CAP,FXD,CER DI:100 PF,10%,100V	04222	MA101A101KAA
A10C1309	281-0775-00			CAP,FXD,CER DI:0.1UF,20%,50V	04222	MA205E104MAA
A10C1311	281-0158-00			CAP,VAR,CER DI:7-45PF,25V	59660	518-006 G 7-45
A10C1313	281-0775-00			CAP,FXD,CER DI:0.1UF,20%,50V	04222	MA205E104MAA
A10C1315	281-0775-00			CAP,FXD,CER DI:0.1UF,20%,50V	04222	MA205E104MAA
A10C1400	290-0847-00			CAP,FXD,ELCTLT:47UF,+50-10%,10V	54473	ECE-B1AV470S
A10C1401	281-0775-00			CAP,FXD,CER DI:0.1UF,20%,50V	04222	MA205E104MAA
A10C1402	281-0775-00			CAP,FXD,CER DI:0.1UF,20%,50V	04222	MA205E104MAA
A10C1403	281-0775-00			CAP,FXD,CER DI:0.1UF,20%,50V	04222	MA205E104MAA
A10C1500	281-0775-00			CAP,FXD,CER DI:0.1UF,20%,50V	04222	MA205E104MAA
A10C1501	281-0775-00			CAP,FXD,CER DI:0.1UF,20%,50V	04222	MA205E104MAA
A10C1503	281-0775-00			CAP,FXD,CER DI:0.1UF,20%,50V	04222	MA205E104MAA
A10C1590	281-0775-00	B010100	B013489	CAP,FXD,CER DI:0.1UF,20%,50V	04222	MA205E104MAA
A10C1591	281-0775-00			CAP,FXD,CER DI:0.1UF,20%,50V	04222	MA205E104MAA
A10C1592	281-0775-00			CAP,FXD,CER DI:0.1UF,20%,50V	04222	MA205E104MAA
A10C1593	281-0775-00			CAP,FXD,CER DI:0.1UF,20%,50V	04222	MA205E104MAA
A10C1594	281-0775-00			CAP,FXD,CER DI:0.1UF,20%,50V	04222	MA205E104MAA
A10C1600	281-0811-00			CAP,FXD,CER DI:10PF,10%,100V	04222	MA101A100KAA
A10C1605	281-0775-00			CAP,FXD,CER DI:0.1UF,20%,50V	04222	MA205E104MAA
A10C1606	281-0775-00			CAP,FXD,CER DI:0.1UF,20%,50V	04222	MA205E104MAA
A10C1610	290-0748-00			CAP,FXD,ELCTLT:10UF,+50-10%,25V	54473	ECE-B1EV100S
A10C1611	290-0136-00	B010100	B017648	CAP,FXD,ELCTLT:2.2UF,20%,20V	05397	T322B225M020AS
A10C1611	290-0136-02	B017649		CAP,FXD,ELCTLT:2.2UF,20%,20V	56289	173D225X0020V
A10C1660	281-0798-00			CAP,FXD,CER DI:51PF,1%,100V	04222	MA101A510GAA
A10C1680	281-0775-00			CAP,FXD,CER DI:0.1UF,20%,50V	04222	MA205E104MAA
A10C1690	281-0775-00	B010100	B013489	CAP,FXD,CER DI:0.1UF,20%,50V	04222	MA205E104MAA
A10C1691	281-0775-00	B010100	B013489	CAP,FXD,CER DI:0.1UF,20%,50V	04222	MA205E104MAA
A10C1692	281-0775-00			CAP,FXD,CER DI:0.1UF,20%,50V	04222	MA205E104MAA
A10C1801	283-0187-03			CAP,FXD,CER DI:0.047UF,10%,500V	51642	400-500-X5R-473K
A10C1802	281-0896-00			CAP,FXD,CER DI:28PF,2%,500V	96733	XR3447
A10C1804	285-1247-00			CAP,FXD,PLASTIC:304PF,1.75%,500V	80009	285-1247-00
A10C1805	285-1248-00			CAP,FXD,PLASTIC:0.003UF,+1.75%,300V	80009	285-1248-00

Component No.	Tektronix Part No.	Serial/Assembly No. Effective	Dscont	Name & Description	Mfr. Code	Mfr. Part No.
A10C1806	285-1249-00			CAP,FXD,PLASTIC:0.026UF,1.75%,100V	80009	285-1249-00
A10C1807	285-1251-00			CAP,FXD,PLASTIC:0.033UF,10%,400VAC	TK0515	PHE 404 KA 533
A10C1808	285-1251-00			CAP,FXD,PLASTIC:0.033UF,10%,400VAC	TK0515	PHE 404 KA 533
A10C1811	285-1242-00			CAP,FXD,PLASTIC:0.033UF,10%,250V	55112	171/.033/K/250/C
A10C1813	281-0815-00			CAP,FXD,CER DI:0.027UF,20%,50V	04222	MA205C273MAA
A10C1815	281-0775-00			CAP,FXD,CER DI:0.1UF,20%,50V	04222	MA205E104MAA
A10C1816	281-0813-00			CAP,FXD,CER DI:0.047UF,20%,50V	05397	C412C473M5V2CA
A10C1817	281-0813-00			CAP,FXD,CER DI:0.047UF,20%,50V	05397	C412C473M5V2CA
A10C1818	281-0813-00			CAP,FXD,CER DI:0.047UF,20%,50V	05397	C412C473M5V2CA
A10C1819	281-0775-00			CAP,FXD,CER DI:0.1UF,20%,50V	04222	MA205E104MAA
A10C1820	281-0898-00			CAP,FXD,CER DI:7.5PF,+/-0.5PF,500V	96733	XR3446
A10C1827	283-0790-00			CAP,FXD,MICA DI:850PF,1%,500V	00853	0195F851F0
A10C1830	281-0826-00			CAP,FXD,CER DI:2200PF,5%,100V	20932	401EM100AD222K
A10C1850	283-0644-00			CAP,FXD,MICA DI:150PF,1%,500V	00853	0155F151F0
A10CR1001	152-0141-02			SEMICOND DVC,DI:SM,SI,30V,150MA,30V,DO-35	03508	DA2527 (1N4152)
A10CR1002	152-0141-02			SEMICOND DVC,DI:SM,SI,30V,150MA,30V,DO-35	03508	DA2527 (1N4152)
A10CR1003	152-0141-02			SEMICOND DVC,DI:SM,SI,30V,150MA,30V,DO-35	03508	DA2527 (1N4152)
A10CR1004	152-0141-02			SEMICOND DVC,DI:SM,SI,30V,150MA,30V,DO-35	03508	DA2527 (1N4152)
A10CR1010	152-0322-00	B010100	B022329	SEMICOND DVC,DI:SCHOTTKY BARRIER,SI,15V	50434	5082-2672
A10CR1010	152-0951-00	B022330		SEMICOND DVC DI:SI,SCHOTTKY,60V,2.2F	50434	IN6263
A10CR1100	152-0141-02			SEMICOND DVC,DI:SM,SI,30V,150MA,30V,DO-35	03508	DA2527 (1N4152)
A10CR1300	152-0269-00			SEMICOND DVC,DI:VVC,SI,35V,33PF,DO-7	04713	SMV1263
A10CR1500	152-0141-02			SEMICOND DVC,DI:SM,SI,30V,150MA,30V,DO-35	03508	DA2527 (1N4152)
A10CR1600	152-0141-02			SEMICOND DVC,DI:SM,SI,30V,150MA,30V,DO-35	03508	DA2527 (1N4152)
A10CR1601	152-0141-02			SEMICOND DVC,DI:SM,SI,30V,150MA,30V,DO-35	03508	DA2527 (1N4152)
A10CR1602	152-0141-02			SEMICOND DVC,DI:SM,SI,30V,150MA,30V,DO-35	03508	DA2527 (1N4152)
A10CR1801	152-0333-00			SEMICOND DVC,DI:SM,SI,55V,200MA,DO-35	07263	FDH-6012
A10CR1802	152-0333-00			SEMICOND DVC,DI:SM,SI,55V,200MA,DO-35	07263	FDH-6012
A10CR1803	152-0333-00			SEMICOND DVC,DI:SM,SI,55V,200MA,DO-35	07263	FDH-6012
A10CR1804	152-0333-00			SEMICOND DVC,DI:SM,SI,55V,200MA,DO-35	07263	FDH-6012
A10CR1805	152-0246-00			SEMICOND DVC,DI:SM,SI,40V,200MA,DO-7	14433	MG1537TK
A10CR1806	152-0246-00			SEMICOND DVC,DI:SM,SI,40V,200MA,DO-7	14433	MG1537TK
A10CR1810	152-0246-00			SEMICOND DVC,DI:SM,SI,40V,200MA,DO-7	14433	MG1537TK
A10CR1976	152-0141-02			SEMICOND DVC,DI:SM,SI,30V,150MA,30V,DO-35	03508	DA2527 (1N4152)
A10J1900	136-0263-06	B010100	B014069	SOCKET,PIN TERM:U/M 0.025 SQ PIN	22526	75302-001
A10J1900	136-0263-07	B014070		SOCKET,PIN TERM:U/M 0.025 SQ PIN	22526	ORDER BY DESCR
A10J1901	136-0263-06	B010100	B014069	SOCKET,PIN TERM:U/M 0.025 SQ PIN	22526	75302-001
A10J1901	136-0263-07	B014070		SOCKET,PIN TERM:U/M 0.025 SQ PIN	22526	ORDER BY DESCR
A10J1902	136-0263-06	B010100	B014069	SOCKET,PIN TERM:U/M 0.025 SQ PIN	22526	75302-001
A10J1902	136-0263-07	B014070		SOCKET,PIN TERM:U/M 0.025 SQ PIN	22526	ORDER BY DESCR
A10J1903	136-0263-06	B010100	B014069	SOCKET,PIN TERM:U/M 0.025 SQ PIN	22526	75302-001
A10J1903	136-0263-07	B014070		SOCKET,PIN TERM:U/M 0.025 SQ PIN	22526	ORDER BY DESCR
A10J1905	136-0263-06	B010100	B014069	SOCKET,PIN TERM:U/M 0.025 SQ PIN	22526	75302-001
A10J1905	136-0263-07	B014070		SOCKET,PIN TERM:U/M 0.025 SQ PIN	22526	ORDER BY DESCR
A10J1906	136-0263-06	B010100	B014069	SOCKET,PIN TERM:U/M 0.025 SQ PIN	22526	75302-001
A10J1906	136-0263-07	B014070		SOCKET,PIN TERM:U/N 0.025 SQ PIN	22526	ORDER BY DESCR
A10J1907	136-0263-06	B010100	B014069	SOCKET,PIN TERM:U/N 0.025 SQ PIN	22526	75302-001
A10J1907	136-0263-07	B014070		SOCKET,PIN TERM:U/M 0.025 SQ PIN	22526	ORDER BY DESCR
A10J1910	136-0263-06	B010100	B014069	SOCKET,PIN TERM:U/M 0.025 SQ PIN	22526	75302-001
A10J1910	136-0263-07	B014070		SOCKET,PIN TERM:U/M 0.025 SQ PIN	22526	ORDER BY DESCR
A10J1911	136-0263-06	B010100	B014069	SOCKET,PIN TERM:U/M 0.025 SQ PIN	22526	75302-001
A10J1911	136-0263-07	B014070		SOCKET,PIN TERM:U/M 0.025 SQ PIN	22526	ORDER BY DESCR
A10J1912	136-0263-06	B010100	B014069	SOCKET,PIN TERM:U/M 0.025 SQ PIN	22526	75302-001
A10J1912	136-0263-07	B014070		SOCKET,PIN TERM:U/M 0.025 SQ PIN	22526	ORDER BY DESCR
A10J1920	136-0263-06	B010100	B014069	SOCKET,PIN TERM:U/M 0.025 SQ PIN	22526	75302-001
A10J1920	136-0263-07	B014070		SOCKET,PIN TERM:U/M 0.025 SQ PIN	22526	ORDER BY DESCR
A10J1921	136-0263-06	B010100	B014069	SOCKET,PIN TERM:U/M 0.025 SQ PIN	22526	75302-001
A10J1921	136-0263-07	B014070		SOCKET,PIN TERM:U/M 0.025 SQ PIN	22526	ORDER BY DESCR
A10J1922	136-0263-06	B010100	B014069	SOCKET,PIN TERM:U/M 0.025 SQ PIN	22526	75302-001

Component No.	Tektronix Part No.	Serial/Assembly No. Effective	Dscont	Name & Description	Mfr. Code	Mfr. Part No.
A10J1922	136-0263-07	B014070		SOCKET,PIN TERM:U/M 0.025 SQ PIN	22526	ORDER BY DESCR
A10J1923	136-0263-06	B010100	B014069	SOCKET,PIN TERM:U/M 0.025 SQ PIN	22526	75302-001
A10J1923	136-0263-07	B014070		SOCKET,PIN TERM:U/M 0.025 SQ PIN	22526	ORDER BY DESCR
A10J1924	136-0263-06	B010100	B014069	SOCKET,PIN TERM:U/M 0.025 SQ PIN	22526	75302-001
A10J1924	136-0263-07	B014070		SOCKET,PIN TERM:U/M 0.025 SQ PIN	22526	ORDER BY DESCR
A10J1925	136-0263-06	B010100	B014069	SOCKET,PIN TERM:U/M 0.025 SQ PIN	22526	75302-001
A10J1925	136-0263-07	B014070		SOCKET,PIN TERM:U/M 0.025 SQ PIN	22526	ORDER BY DESCR
A10K1801	148-0146-00			RELAY,REED:1 FORM A,500VDC,COIL 5VDC	15636	ORDER BY DESCR
A10K1802	148-0146-00			RELAY,REED:1 FORM A,500VDC,COIL 5VDC	15636	ORDER BY DESCR
A10K1803	148-0146-00			RELAY,REED:1 FORM A,500VDC,COIL 5VDC	15636	ORDER BY DESCR
A10K1804	148-0146-00			RELAY,REED:1 FORM A,500VDC,COIL 5VDC	15636	ORDER BY DESCR
A10L1300	108-0606-00	B010100	B014069	COIL,RF:FIXED,37NH	80009	108-0606-00
A10L1300	108-0420-00	B014070		COIL,RF:FIXED,35NH,15%	TK2042	ORDER BY DESCR
A10L1801	108-0509-00			COIL,RF:FIXED,2.45UH	TK2042	ORDER BY DESCR
A10L1802	108-0509-00			COIL,RF:FIXED,2.45UH	TK2042	ORDER BY DESCR
A10LS1801	119-1537-00			XDCR,AUDIO:PIEZOELECTRIC W/OSCILLATOR	51406	PKB8-400
A10P1000	131-0608-00			TERMINAL,PIN:0.365 L X 0.025 BRZ GLD PL (QUANTITY OF 3)	22526	48283-036
A10P1100	131-0608-00			TERMINAL,PIN:0.365 L X 0.025 BRZ GLD PL (QUANTITY OF 3)	22526	48283-036
A10P1200	131-0608-00			TERMINAL,PIN:0.365 L X 0.025 BRZ GLD PL (QUANTITY OF 3)	22526	48283-036
A10P1400	131-0608-00	B010100	B018231	TERMINAL,PIN:0.365 L X 0.025 BRZ GLD PL (QUANTITY OF 2)	22526	48283-036
A10P1402	131-0608-00	B010100	B018231	TERMINAL,PIN:0.365 L X 0.025 BRZ GLD PL (QUANTITY OF 2)	22526	48283-036
A10P1404	131-0608-00	B010100	B018231	TERMINAL,PIN:0.365 L X 0.025 BRZ GLD PL (QUANTITY OF 3)	22526	48283-036
A10Q1001	151-0188-00			TRANSISTOR:PNP,SI,TO-92	80009	151-0188-00
A10Q1002	151-0188-00			TRANSISTOR:PNP,SI,TO-92	80009	151-0188-00
A10Q1003	151-0188-00			TRANSISTOR:PNP,SI,TO-92	80009	151-0188-00
A10Q1004	151-0188-00			TRANSISTOR:PNP,SI,TO-92	80009	151-0188-00
A10Q1005	151-0188-00			TRANSISTOR:PNP,SI,TO-92	80009	151-0188-00
A10Q1006	151-0190-00			TRANSISTOR:NPN,SI,TO-92	80009	151-0190-00
A10Q1007	151-0190-00			TRANSISTOR:NPN,SI,TO-92	80009	151-0190-00
A10Q1008	151-0188-00	B010100	B018231	TRANSISTOR:PNP,SI,TO-92	80009	151-0188-00
A10Q1008	151-0188-05	B018232		TRANSISTOR:PNP,SI,TO-92	07263	544293(AMMOPACK)
A10Q1009	151-0188-00			TRANSISTOR:PNP,SI,TO-92	80009	151-0188-00
A10Q1010	151-0190-00	B010100	B010699	TRANSISTOR:NPN,SI,TO-92	80009	151-0190-00
A10Q1010	151-0188-00	B010700		TRANSISTOR:PNP,SI,TO-92	80009	151-0188-00
A10Q1011	151-0188-00			TRANSISTOR:PNP,SI,TO-92	80009	151-0188-00
A10Q1012	151-0188-00			TRANSISTOR:PNP,SI,TO-92	80009	151-0188-00
A10Q1100	151-0188-00			TRANSISTOR:PNP,SI,TO-92	80009	151-0188-00
A10Q1101	151-0188-00			TRANSISTOR:PNP,SI,TO-92	80009	151-0188-00
A10Q1102	151-0188-00			TRANSISTOR:PNP,SI,TO-92	80009	151-0188-00
A10Q1103	151-0188-00			TRANSISTOR:PNP,SI,TO-92	80009	151-0188-00
A10Q1200	151-0188-00			TRANSISTOR:PNP,SI,TO-92	80009	151-0188-00
A10Q1201	151-0188-00			TRANSISTOR:PNP,SI,TO-92	80009	151-0188-00
A10Q1202	151-0188-00			TRANSISTOR:PNP,SI,TO-92	80009	151-0188-00
A10Q1203	151-0188-00			TRANSISTOR:PNP,SI,TO-92	80009	151-0188-00
A10Q1300	151-1042-00			SEMICOND DVC SE:FET,SI,TO-92	04713	SPF627M2
A10Q1301	151-0188-00			TRANSISTOR:PNP,SI,TO-92	80009	151-0188-00
A10Q1302	151-0188-00			TRANSISTOR:PNP,SI,TO-92	80009	151-0188-00
A10Q1303	151-0190-00			TRANSISTOR:NPN,SI,TO-92	80009	151-0190-00
A10Q1304	151-0190-00			TRANSISTOR:NPN,SI,TO-92	80009	151-0190-00
A10Q1400	151-0190-00			TRANSISTOR:NPN,SI,TO-92	80009	151-0190-00
A10Q1401	151-0190-00			TRANSISTOR:NPN,SI,TO-92	80009	151-0190-00
A10Q1500	151-0190-00			TRANSISTOR:NPN,SI,TO-92	80009	151-0190-00
A10Q1501	151-0190-00			TRANSISTOR:NPN,SI,TO-92	80009	151-0190-00
A10Q1502	151-0188-00			TRANSISTOR:PNP,SI,TO-92	80009	151-0188-00

Component No.	Tektronix Part No.	Serial/Assembly No. Effective	Dscont	Name & Description	Mfr. Code	Mfr. Part No.
A1Q1503	151-0190-00			TRANSISTOR:NPN,SI,TO-92	80009	151-0190-00
A1Q1504	151-0188-00			TRANSISTOR:PNP,SI,TO-92	80009	151-0188-00
A1Q1505	151-0188-00			TRANSISTOR:PNP,SI,TO-92	80009	151-0188-00
A1Q1506	151-0190-00			TRANSISTOR:NPN,SI,TO-92	80009	151-0190-00
A1Q1507	151-0190-00			TRANSISTOR:NPN,SI,TO-92	80009	151-0190-00
A1Q1601	151-0190-00			TRANSISTOR:NPN,SI,TO-92	80009	151-0190-00
A1Q1602	151-0188-00	B010100	B018231	TRANSISTOR:PNP,SI,TO-92	80009	151-0188-00
A1Q1602	151-0188-05	B018232		TRANSISTOR:PNP,SI,TO-92	07263	S44293(AMMOPACK)
A1Q1603	151-0188-00			TRANSISTOR:PNP,SI,TO-92	80009	151-0188-00
A1Q1604	151-0188-00	B010100	B018231	TRANSISTOR:PNP,SI,TO-92	80009	151-0188-00
A1Q1604	151-0188-05	B018232		TRANSISTOR:PNP,SI,TO-92	07263	S44293(AMMOPACK)
A1Q1807	151-1005-00			TRANSISTOR:FET,N-CHAN,SI,TO-106	04713	SPF685
A1Q1808	151-0190-00			TRANSISTOR:NPN,SI,TO-92	80009	151-0190-00
A1Q1809	151-0254-00			TRANSISTOR:DARLINGTON,NPN,SI	03508	X38L3118
A1Q1810	151-0254-00			TRANSISTOR:DARLINGTON,NPN,SI	03508	X38L3118
A1OR1001	315-0472-00			RES,FXD,FILM:4.7K OHM,5%,0.25W	57668	NTR25J-E04K7
A1OR1002	315-0472-00			RES,FXD,FILM:4.7K OHM,5%,0.25W	57668	NTR25J-E04K7
A1OR1003	315-0472-00			RES,FXD,FILM:4.7K OHM,5%,0.25W	57668	NTR25J-E04K7
A1OR1004	315-0472-00			RES,FXD,FILM:4.7K OHM,5%,0.25W	57668	NTR25J-E04K7
A1OR1005	315-0472-00			RES,FXD,FILM:4.7K OHM,5%,0.25W	57668	NTR25J-E04K7
A1OR1006	315-0103-00			RES,FXD,FILM:10K OHM,5%,0.25W	19701	5043CX10K00J
A1OR1007	315-0103-00			RES,FXD,FILM:10K OHM,5%,0.25W	19701	5043CX10K00J
A1OR1008	315-0103-00			RES,FXD,FILM:10K OHM,5%,0.25W	19701	5043CX10K00J
A1OR1009	315-0223-00			RES,FXD,FILM:22K OHM,5%,0.25W	19701	5043CX22K00J92U
A1OR1010	315-0472-00			RES,FXD,FILM:4.7K OHM,5%,0.25W	57668	NTR25J-E04K7
A1OR1012	315-0511-00			RES,FXD,FILM:510 OHM,5%,0.25W	19701	5043CX510R0J
A1OR1013	315-0511-00			RES,FXD,FILM:510 OHM,5%,0.25W	19701	5043CX510R0J
A1OR1014	315-0511-00			RES,FXD,FILM:510 OHM,5%,0.25W	19701	5043CX510R0J
A1OR1015	315-0511-00			RES,FXD,FILM:510 OHM,5%,0.25W	19701	5043CX510R0J
A1OR1016	315-0511-00			RES,FXD,FILM:510 OHM,5%,0.25W	19701	5043CX510R0J

A10R1017	315-0511-00			RES,FXD,FILM:510 OHM,5%,0.25W	19701	5043CX510R0J
A10R1018	315-0472-00	B010100	B010699	RES,FXD,FILM:4.7K OHM,5%,0.25W	57668	NTR25J-E04K7
A10R1018	315-0223-00	B010700		RES,FXD,FILM:22K OHM,5%,0.25W	19701	5043CX22K00J92U
A10R1019	315-0472-00			RES,FXD,FILM:4.7K OHM,5%,0.25W	57668	NTR25J-E04K7
A10R1020	315-0472-00			RES,FXD,FILM:4.7K OHM,5%,0.25W	57668	NTR25J-E04K7
A10R1021	315-0391-00			RES,FXD,FILM:390 OHM,5%,0.25W	57668	NTR25J-E390E
A10R1022	315-0511-00			RES,FXD,FILM:510 OHM,5%,0.25W	19701	5043CX510R0J
A10R1023	315-0511-00			RES,FXD,FILM:510 OHM,5%,0.25W	19701	5043CX510R0J
A10R1024	315-0103-00			RES,FXD,FILM:10K OHM,5%,0.25W	19701	5043CX10K00J
A10R1025	315-0101-00			RES,FXD,FILM:100 OHM,5%,0.25W	57668	NTR25J-E 100E
A10R1026	315-0511-00			RES,FXD,FILM:510 OHM,5%,0.25W	19701	5043CX510R0J
A10R1027	315-0391-00			RES,FXD,FILM:390 OHM,5%,0.25W	57668	NTR25J-E390E
A10R1028	315-0511-00			RES,FXD,FILM:510 OHM,5%,0.25W	19701	5043CX510R0J
A10R1029	315-0101-00			RES,FXD,FILM:100 OHM,5%,0.25W	57668	NTR25J-E 100E
A10R1030	315-0181-00			RES,FXD,FILM:180 OHM,5%,0.25W	57668	NTR25J-E180E
A10R1031	315-0621-00			RES,FXD,FILM:620 OHM,5%,0.25W	57668	NTR25J-E620E
A10R1032	315-0103-00			RES,FXD,FILM:10K OHM,5%,0.25W	19701	5043CX10K00J
A10R1033	315-0392-00			RES,FXD,FILM:3.9K OHM,5%,0.25W	57668	NTR25J-E03K9
A10R1034	315-0511-00			RES,FXD,FILM:510 OHM,5%,0.25W	19701	5043CX510R0J
A10R1035	315-0511-00			RES,FXD,FILM:510 OHM,5%,0.25W	19701	5043CX510R0J
A10R1050	315-0201-00			RES,FXD,FILM:200 OHM,5%,0.25W	57668	NTR25J-E200E
A10R1100	315-0101-00			RES,FXD,FILM:100 OHM,5%,0.25W	57668	NTR25J-E 100E
A10R1101	315-0391-00			RES,FXD,FILM:390 OHM,5%,0.25W	57668	NTR25J-E390E
A10R1102	315-0511-00			RES,FXD,FILM:510 OHM,5%,0.25W	19701	5043CX510R0J
A10R1103	315-0511-00			RES,FXD,FILM:510 OHM,5%,0.25W	19701	5043CX510R0J
A10R1104	315-0511-00			RES,FXD,FILM:510 OHM,5%,0.25W	19701	5043CX510R0J
A10R1105	315-0511-00			RES,FXD,FILM:510 OHM,5%,0.25W	19701	5043CX510R0J
A10R1106	315-0390-00			RES,FXD,FILM:39 OHM,5%,0.25W	57668	NTR25J-E39E0
A10R1107	315-0121-00			RES,FXD,FILM:120 OHM,5%,0.25W	19701	5043CX120R0J

Component No.	Tektronix Part No.	Serial/Assembly No. Effective	Dscont	Name & Description	Mfr. Code	Mfr. Part No.
A10R1108	315-0103-00			RES,FXD,FILM:10K OHM,5%,0.25W	19701	5043CX10K00J
A10R1109	315-0103-00			RES,FXD,FILM:10K OHM,5%,0.25W	19701	5043CX10K00J
A10R1110	315-0103-00			RES,FXD,FILM:10K OHM,5%,0.25W	19701	5043CX10K00J
A10R1200	315-0101-00			RES,FXD,FILM:100 OHM,5%,0.25W	57668	NTR25J-E 100E
A10R1201	315-0391-00			RES,FXD,FILM:390 OHM,5%,0.25W	57668	NTR25J-E390E
A10R1202	315-0511-00			RES,FXD,FILM:510 OHM,5%,0.25W	19701	5043CX510R0J
A10R1203	315-0511-00			RES,FXD,FILM:510 OHM,5%,0.25W	19701	5043CX510R0J
A10R1204	315-0511-00			RES,FXD,FILM:510 OHM,5%,0.25W	19701	5043CX510R0J
A10R1205	315-0511-00			RES,FXD,FILM:510 OHM,5%,0.25W	19701	5043CX510R0J
A10R1206	315-0390-00			RES,FXD,FILM:39 OHM,5%,0.25W	57668	NTR25J-E39E0
A10R1207	315-0121-00			RES,FXD,FILM:120 OHM,5%,0.25W	19701	5043CX120R0J
A10R1208	315-0103-00			RES,FXD,FILM:10K OHM,5%,0.25W	19701	5043CX10K00J
A10R1300	315-0103-00			RES,FXD,FILM:10K OHM,5%,0.25W	19701	5043CX10K00J
A10R1301	315-0103-00			RES,FXD,FILM:10K OHM,5%,0.25W	19701	5043CX10K00J
A10R1302	315-0243-00			RES,FXD,FILM:24K OHM,5%,0.25W	57668	NTR25J-E24K0
A10R1303	315-0133-00			RES,FXD,FILM:13K OHM,5%,0.25W	19701	5043CX13K00J
A10R1304	315-0102-00			RES,FXD,FILM:1K OHM,5%,0.25W	57668	NTR25JE01K0
A10R1305	315-0910-00			RES,FXD,FILM:91 OHM,5%,0.25W	19701	5043CX91R00J
A10R1306	315-0622-00	B010100	B014069	RES,FXD,FILM:6.2K OHM,5%,0.25W	19701	5043CX6K200J
A10R1306	315-0102-00	B014070		RES,FXD,FILM:1K OHM,5%,0.25W	57668	NTR25JE01K0
A10R1308	315-0101-00			RES,FXD,FILM:100 OHM,5%,0.25W	57668	NTR25J-E 100E
A10R1309	315-0391-00			RES,FXD,FILM:390 OHM,5%,0.25W	57668	NTR25J-E390E
A10R1310	315-0102-00			RES,FXD,FILM:1K OHM,5%,0.25W	57668	NTR25JE01K0
A10R1311	315-0102-00			RES,FXD,FILM:1K OHM,5%,0.25W	57668	NTR25JE01K0
A10R1312	315-0511-00			RES,FXD,FILM:510 OHM,5%,0.25W	19701	5043CX510R0J
A10R1313	315-0103-00			RES,FXD,FILM:10K OHM,5%,0.25W	19701	5043CX10K00J
A10R1314	315-0103-00			RES,FXD,FILM:10K OHM,5%,0.25W	19701	5043CX10K00J
A10R1315	315-0333-00			RES,FXD,FILM:33K OHM,5%,0.25W	57668	NTR25J-E33K0
A10R1316	315-0123-00			RES,FXD,FILM:12K OHM,5%,0.25W	57668	NTR25J-E12K0
A10R1317	315-0332-00			RES,FXD,FILM:3.3K OHM,5%,0.25W	57668	NTR25J-E03K3

A10R1318	315-0102-00	RES,FXD,FILM:1K OHM,5%,0.25W	57668	NTR25JE01K0
A10R1319	315-0331-00	RES,FXD,FILM:330 OHM,5%,0.25W	57668	NTR25J-E330E
A10R1320	315-0683-00	RES,FXD,FILM:68K OHM,5%,0.25W	57668	NTR25J-E68K0
A10R1362	315-0470-00	RES,FXD,FILM:47 OHM,5%,0.25W	57668	NTR25J-E47E0
A10R1363	315-0470-00	RES,FXD,FILM:47 OHM,5%,0.25W	57668	NTR25J-E47E0
A10R1400	315-0472-00	RES,FXD,FILM:4.7K OHM,5%,0.25W	57668	NTR25J-E04K7
A10R1401	315-0182-00	RES,FXD,FILM:1.8K OHM,5%,0.25W	57668	NTR25J-E1K8
A10R1402	315-0103-00	RES,FXD,FILM:10K OHM,5%,0.25W	19701	5043CX10K00J
A10R1403	315-0473-00	RES,FXD,FILM:47K OHM,5%,0.25W	57668	NTR25J-E47K0
A10R1404	307-0446-00	RES NTWK,FXD,FI:10K OHM,20%,(9)RES	11236	750-101-R10K
A10R1405	307-0542-00	RES NTWK,FXD,FI:(5)10K OHM,5%,0.125W	01121	106A1030R706A103
A10R1406	315-0103-00	RES,FXD,FILM:10K OHM,5%,0.25W	19701	5043CX10K00J
A10R1407	315-0103-00	RES,FXD,FILM:10K OHM,5%,0.25W	19701	5043CX10K00J
A10R1408	315-0103-00	RES,FXD,FILM:10K OHM,5%,0.25W	19701	5043CX10K00J
A10R1500	307-0446-00	RES NTWK,FXD,FI:10K OHM,20%,(9)RES	11236	750-101-R10K
A10R1500	307-0446-00	RES NTWK,FXD,FI:10K OHM,20%,(9)RES	11236	750-101-R10K
A10R1501	315-0103-00	RES,FXD,FILM:10K OHM,5%,0.25W	19701	5043CX10K00J
A10R1502	315-0473-00	RES,FXD,FILM:47K OHM,5%,0.25W	57668	NTR25J-E47K0
A10R1503	315-0224-00	RES,FXD,FILM:220K OHM,5%,0.25W	57668	NTR25J-E220K
A10R1504	315-0103-00	RES,FXD,FILM:10K OHM,5%,0.25W	19701	5043CX10K00J
A10R1505	315-0103-00	RES,FXD,FILM:10K OHM,5%,0.25W	19701	5043CX10K00J
A10R1506	315-0103-00	RES,FXD,FILM:10K OHM,5%,0.25W	19701	5043CX10K00J
A10R1507	315-0103-00	RES,FXD,FILM:10K OHM,5%,0.25W	19701	5043CX10K00J
A10R1508	315-0103-00	RES,FXD,FILM:10K OHM,5%,0.25W	19701	5043CX10K00J
A10R1509	315-0472-00	RES,FXD,FILM:4.7K OHM,5%,0.25W	57668	NTR25J-E04K7
A10R1510	315-0472-00	RES,FXD,FILM:4.7K OHM,5%,0.25W	57668	NTR25J-E04K7
A10R1511	315-0103-00	RES,FXD,FILM:10K OHM,5%,0.25W	19701	5043CX10K00J
A10R1512	315-0103-00	RES,FXD,FILM:10K OHM,5%,0.25W	19701	5043CX10K00J
A10R1513	315-0121-00	RES,FXD,FILM:120 OHM,5%,0.25W	19701	5043CX120R0J

Component No.	Tektronix Part No.	Serial/Assembly No. Effective	Dscont	Name & Description	Mfr. Code	Mfr. Part No.
A10R1514	315-0910-00			RES,FXD,FILM:91 OHM,5%,0.25W	19701	5043CX91R00J
A10R1515	315-0103-00			RES,FXD,FILM:10K OHM,5%,0.25W	19701	5043CX10K00J
A10R1516	315-0223-00			RES,FXD,FILM:22K OHM,5%,0.25W	19701	5043CX22K00J92U
A10R1517	315-0223-00			RES,FXD,FILM:22K OHM,5%,0.25W	19701	5043CX22K00J92U
A10R1518	315-0473-00			RES,FXD,FILM:47K OHM,5%,0.25W	57668	NTR25J-E47K0
A10R1519	315-0103-00			RES,FXD,FILM:10K OHM,5%,0.25W	19701	5043CX10K00J
A10R1520	315-0103-00			RES,FXD,FILM:10K OHM,5%,0.25W	19701	5043CX10K00J
A10R1521	315-0820-00			RES,FXD,FILM:82 OHM,5%,0.25W	57668	NTR25J-E82E0
A10R1522	315-0221-00			RES,FXD,FILM:220 OHM,5%,0.25W	57668	NTR25J-E220E
A10R1523	315-0471-00			RES,FXD,FILM:470 OHM,5%,0.25W	57668	NTR25J-E470E
A10R1524	315-0102-00			RES,FXD,FILM:1K OHM,5%,0.25W	57668	NTR25JE01K0
A10R1525	315-0391-00			RES,FXD,FILM:390 OHM,5%,0.25W	57668	NTR25J-E390E
A10R1600	315-0103-00			RES,FXD,FILM:10K OHM,5%,0.25W	19701	5043CX10K00J
A10R1601	315-0103-00			RES,FXD,FILM:10K OHM,5%,0.25W	19701	5043CX10K00J
A10R1602	315-0821-00			RES,FXD,FILM:820 OHM,5%,0.25W	19701	5043CX820R0J
A10R1603	315-0302-00			RES,FXD,FILM:3K OHM,5%,0.25W	57668	NTR25J-E03K0
A10R1604	315-0471-00			RES,FXD,FILM:470 OHM,5%,0.25W	57668	NTR25J-E470E
A10R1605	315-0511-00			RES,FXD,FILM:510 OHM,5%,0.25W	19701	5043CX510R0J
A10R1606	315-0511-00			RES,FXD,FILM:510 OHM,5%,0.25W	19701	5043CX510R0J
A10R1607	315-0471-00			RES,FXD,FILM:470 OHM,5%,0.25W	57668	NTR25J-E470E
A10R1608	315-0302-00			RES,FXD,FILM:3K OHM,5%,0.25W	57668	NTR25J-E03K0
A10R1609	315-0821-00			RES,FXD,FILM:820 OHM,5%,0.25W	19701	5043CX820R0J
A10R1612	315-0912-00			RES,FXD,FILM:9.1K OHM,5%,0.25W	57668	NTR25J-E09K1
A10R1613	315-0122-00			RES,FXD,FILM:1.2K OHM,5%,0.25W	57668	NTR25J-E01K2
A10R1615	315-0242-00			RES,FXD,FILM:2.4K OHM,5%,0.25W	57668	NTR25J-E02K4
A10R1617	311-2176-00	B010100	B010999	RES,VAR,NONWW:CKT BD,2.2K OHM,20%,0.19W	19701	2322-417-85205
A10R1617	311-1625-01	B011000	B014069	RES,VAR,NONWW:CKT BD,1K OHM,20%,0.19W	19701	MODEL 2322
A10R1617	311-1638-00	B014070	B015819	RES,VAR,NONWW:PNL,2K OHM FR/10K OHM R,0.5W	12697	CM43466
A10R1617	311-1638-01	B015820		RES,VAR,NONWW:PNL,2K OHM R,10K OHM FR,0.5W	12697	CM43474
A10R1618	315-0133-00	B014070		RES,FXD,FILM:13K OHM,5%,0.25W	19701	5043CX13K00J

A10R1619	315-0621-00	B014070		RES,FXD,FILM:620 OHM,5%,0.25W	57668	NTR25J-E620E
A10R1631	315-0103-00			RES,FXD,FILM:10K OHM,5%,0.25W	19701	5043CX10K00J
A10R1632	315-0103-00			RES,FXD,FILM:10K OHM,5%,0.25W	19701	5043CX10K00J
A10R1633	315-0103-00			RES,FXD,FILM:10K OHM,5%,0.25W	19701	5043CX10K00J
A10R1634	315-0103-00			RES,FXD,FILM:10K OHM,5%,0.25W	19701	5043CX10K00J
A10R1635	315-0103-00			RES,FXD,FILM:10K OHM,5%,0.25W	19701	5043CX10K00J
A10R1640	315-0222-00			RES,FXD,FILM:2.2K OHM,5%,0.25W	57668	NTR25J-E02K2
A10R1641	315-0103-00			RES,FXD,FILM:10K OHM,5%,0.25W	19701	5043CX10K00J
A10R1642	315-0103-00			RES,FXD,FILM:10K OHM,5%,0.25W	19701	5043CX10K00J
A10R1650	315-0102-00			RES,FXD,FILM:1K OHM,5%,0.25W	57668	NTR25JE01K0
A10R1651	315-0101-00			RES,FXD,FILM:100 OHM,5%,0.25W	57668	NTR25J-E 100E
A10R1660	315-0242-00			RES,FXD,FILM:2.4K OHM,5%,0.25W	57668	NTR25J-E02K4
A10R1661	315-0181-00			RES,FXD,FILM:180 OHM,5%,0.25W	57668	NTR25J-E180E
A10R1670	315-0102-00			RES,FXD,FILM:1K OHM,5%,0.25W	57668	NTR25JE01K0
A10R1671	315-0432-00			RES,FXD,FILM:4.3K OHM,5%,0.25W	57668	NTR25J-E04K3
A10R1672	315-0752-00			RES,FXD,FILM:7.5K OHM,5%,0.25W	57668	NTR25J-E07K5
A10R1680	315-0100-00			RES,FXD,FILM:10 OHM,5%,0.25W	19701	5043CX10RR00J
A10R1681	315-0100-00			RES,FXD,FILM:10 OHM,5%,0.25W	19701	5043CX10RR00J
A10R1690	315-0182-00	B010100	B010999	RES,FXD,FILM:1.8K OHM,5%,0.25W	57668	NTR25J-E1K8
A10R1801	307-0849-00			RES NTWK,FXD,FI:1K,9K,90K,900K,9MEG OHM	19647	1776241(COATED)
A10R1802	311-1232-00	B010100	B018231	RES,VAR,NONWW:TRMR,50K OHM,0.5W	32997	3386F-T04-503
A10R1802	311-2239-00	B018232		RES,VAR,NONWW:TRMR,100K OHM,20%,0.5W LINEAR	TK1450	GF06UT 100K
A10R1803	315-0226-00			RES,FXD,FILM:22M OHM,5%,0.25W	80009	315-0226-00
A10R1805	315-0101-00			RES,FXD,FILM:100 OHM,5%,0.25W	57668	NTR25J-E 100E
A10R1807	301-0103-00			RES,FXD,FILM:10K OHM,5%,0.50W	19701	5053CX10K00J
A10R1809	315-0474-00			RES,FXD,FILM:470K OHM,5%,0.25W	19701	5043CX470K0J92U
A10R1810	315-0474-00			RES,FXD,FILM:470K OHM,5%,0.25W	19701	5043CX470K0J92U
A10R1812	315-0102-00			RES,FXD,FILM:1K OHM,5%,0.25W	57668	NTR25JE01K0
A10R1813	315-0104-00			RES,FXD,FILM:100K OHM,5%,0.25W	57668	NTR25J-E100K

Component No.	Tektronix Part No.	Serial/Assembly No. Effective	Discont	Name & Description	Mfr. Code	Mfr. Part No.
A10R1814	315-0104-00	B010100	B011149	RES,FXD,FILM:100K OHM,5%,0.25W	57668	NTR25J-E100K
A10R1814	315-0433-00	B011150		RES,FXD,FILM:43K OHM,5%,0.25W	19701	5043CX43K00J
A10R1815	321-0001-00			RES,FXD,FILM:10 OHM,1%,0.125W,TC=T0	19701	5043ED10R00F
A10R1816	315-0107-00			RES,FXD,FILM:100M OHM,5%,0.25W	01121	CB1075
A10R1817	311-1225-00	B010100	B011149	RES,VAR,NONWW:TRMR,1K OHM,0.5W	32997	3386F-T04-102
A10R1817	311-1235-00	B011150	B018231	RES,VAR,NONWW:100K OHM,0.5W	32997	3386F-T04-104
A10R1817	311-2239-00	B018232		RES,VAR,NONWW:TRMR,100K OHM,20%,0.5W LINEAR	TK1450	GF06UT 100K
A10R1818	315-0104-00			RES,FXD,FILM:100K OHM,5%,0.25W	57668	NTR25J-E100K
A10R1819	311-1225-00	B010100	B018231	RES,VAR,NONWW:TRMR,1K OHM,0.5W	32997	3386F-T04-102
A10R1819	311-2231-00	B018232		RES,VAR,NONWW:TRMR,1K OHM,20%,0.5W	TK1450	GF06UT 1K
A10R1820	315-0100-00			RES,FXD,FILM:10 OHM,5%,0.25W	19701	5043CX10RR00J
A10R1821	315-0100-00			RES,FXD,FILM:10 OHM,5%,0.25W	19701	5043CX10RR00J
A10R1823	315-0223-00			RES,FXD,FILM:22K OHM,5%,0.25W	19701	5043CX22K00J92U
A10R1825	315-0271-00			RES,FXD,FILM:270 OHM,5%,0.25W	57668	NTR25J-E270E
A10R1826	315-0271-00			RES,FXD,FILM:270 OHM,5%,0.25W	57668	NTR25J-E270E
A10R1827	315-0181-00			RES,FXD,FILM:180 OHM,5%,0.25W	57668	NTR25J-E180E
A10R1828	315-0271-00			RES,FXD,FILM:270 OHM,5%,0.25W	57668	NTR25J-E270E
A10R1829	315-0104-00	B010100	B011149	RES,FXD,FILM:100K OHM,5%,0.25W	57668	NTR25J-E100K
A10R1829	315-0433-00	B011150		RES,FXD,FILM:43K OHM,5%,0.25W	19701	5043CX43K00J
A10R1830	315-0104-00			RES,FXD,FILM:100K OHM,5%,0.25W	57668	NTR25J-E100K
A10R1832	311-1225-00	B010100	B014069	RES,VAR,NONWW:TRMR,1K OHM,0.5W	32997	3386F-T04-102
A10R1833	315-0103-00			RES,FXD,FILM:10K OHM,5%,0.25W	19701	5043CX10K00J
A10R1834	315-0162-00			RES,FXD,FILM:1.6K OHM,5%,0.25W	19701	5043CX1K600J
A10R1835	315-0301-00			RES,FXD,FILM:300 OHM,5%,0.25W	57668	NTR25J-E300E
A10R1850	315-0112-00			RES,FXD,FILM:1.1K OHM,5%,0.25W	19701	5043CX1K100J
A10R1861	315-0512-00			RES,FXD,FILM:5.1K OHM,5%,0.25W	57668	NTR25J-E05K1
A10R1960	315-0201-02			RES,FXD,CMPSN:200 OHM,5%,0.25W	01121	CB2015
A10RT1806	307-0645-00			RES,THERMAL:5K OHM,40%	50157	180Q50201
A10S1400	260-1721-00	B010100	B014069	SWITCH,ROCKER:8,SPST,125MA,30VDC	81073	76SB08S
A10T1801	120-1454-00			XFMR,PWR,STPDN:HF,ISOLATION	80009	120-1454-00
A10TP1000	131-0608-00			TERMINAL,PIN:0.365 L X 0.025 BRZ GLD PL	22526	48283-036
A10TP1500	131-0608-00			TERMINAL,PIN:0.365 L X 0.025 BRZ GLD PL	22526	48283-036
A10TP1501	131-0608-00			TERMINAL,PIN:0.365 L X 0.025 BRZ GLD PL	22526	48283-036
A10TP1800	131-0608-00			TERMINAL,PIN:0.365 L X 0.025 BRZ GLD PL	22526	48283-036
A10TP1801	131-0608-00			TERMINAL,PIN:0.365 L X 0.025 BRZ GLD PL	22526	48283-036
A10U1001	156-0230-02			MICROCKT,DGTL:ECL,DUAL D-TYPE W/S FF	04713	MC10131LD
A10U1002	156-0295-00			MICROCKT,DGTL:TRIPLE 2-INP EXCL OR EXCL NOR	04713	MC10107
A10U1003	156-0205-02			MICROCKT,DGTL:QUAD 2 INP NOR GATE	04713	MC10102PD/LD
A10U1004	156-0182-02			MICROCKT,DGTL:TRIPLE 2-3-2 INPUT GATE	04713	MC10105PD/LD
A10U1005	156-0898-01			MICROCKT,DGTL:DUAL BIN TO 1-OF-4 DCDR/DEMUX	02735	CD4556BFX
A10U1006	156-0494-02			MICROCKT,DGTL:HEX INV/BUFF,SELECTED	02735	CD4049UBFX
A10U1100	156-0230-02			MICROCKT,DGTL:ECL,DUAL D-TYPE W/S FF	04713	MC10131LD
A10U1101	156-0387-02			MICROCKT,DGTL:DUAL J-K FF,SCRN	04713	SN74LS73NDS
A10U1102	156-1172-01			MICROCKT,DGTL:DUAL 4 BIT BIN CNTR	01295	SN74LS393NP3
A10U1103	156-0545-01			MICROCKT,DGTL:12 BIT BINARY CNTR	02735	CD4040BFX
A10U1104	156-0852-02			MICROCKT,DGTL:HEX BUS DRVR W/3 STATE OUT	01295	SN74LS367NP3
A10U1105	156-0852-02			MICROCKT,DGTL:HEX BUS DRVR W/3 STATE OUT	01295	SN74LS367NP3
A10U1106	156-0852-02			MICROCKT,DGTL:HEX BUS DRVR W/3 STATE OUT	01295	SN74LS367NP3
A10U1107	156-0852-02			MICROCKT,DGTL:HEX BUS DRVR W/3 STATE OUT	01295	SN74LS367NP3
A10U1200	156-0230-02			MICROCKT,DGTL:ECL,DUAL D-TYPE W/S FF	04713	MC10131LD
A10U1201	156-1172-01			MICROCKT,DGTL:DUAL 4 BIT BIN CNTR	01295	SN74LS393NP3
A10U1202	156-0545-01			MICROCKT,DGTL:12 BIT BINARY CNTR	02735	CD4040BFX
A10U1203	156-0852-02			MICROCKT,DGTL:HEX BUS DRVR W/3 STATE OUT	01295	SN74LS367NP3
A10U1204	156-0852-02			MICROCKT,DGTL:HEX BUS DRVR W/3 STATE OUT	01295	SN74LS367NP3
A10U1205	156-0852-02			MICROCKT,DGTL:HEX BUS DRVR W/3 STATE OUT	01295	SN74LS367NP3
A10U1206	156-0852-02			MICROCKT,DGTL:HEX BUS DRVR W/3 STATE OUT	01295	SN74LS367NP3
A10U1300	156-0124-02			MICROCKT,DGTL:SCRN	04713	MC4044LDS
A10U1301	156-0266-01			MICROCKT,DGTL:EMITTER COUPLED OSCILLATOR	04713	MC1648PD/LD
A10U1302	156-0642-01			MICROCKT,DGTL:BI QUINARY CNTR,SCREENED	04713	MC10138PD/LD

Component No.	Tektronix Part No.	Serial/Assembly No. Effective	Dscont	Name & Description	Mfr. Code	Mfr. Part No.
A10U1303	156-0388-03			MICROCKT,DGTL:DUAL D FLIP-FLOP	01295	SN74LS74ANP3
A10U1400	156-1342-00			MICROCKT,DGTL:NMOS,8 BIT W/CLOCK & RAM	04713	MC6802P
A10U1401	160-1809-00	B010100	B018231	MICROCKT,DGTL:8192 X 8 EPROM,PRGM	80009	160-1809-00
A10U1401	160-3356-00	B018232		MICROCKT,DGTL:NMOS,16384 X 8,MASKED ROM	80009	160-3356-00
A10U1402	160-1808-00	B010100	B018231	MICROCKT,DGTL:2048 X 8 EPROM,PRGM	80009	160-1808-00
A10U1403	156-0645-02			MICROCKT,DGTL:HEX INV ST NAND GATES	04713	SN74LS14NDS
A10U1404	156-0464-02			MICROCKT,DGTL:DUAL 4-INP NAND GATE	01295	SN74LS20NP3
A10U1405	156-0386-02			MICROCKT,DGTL:TRIPLE 3-INP NAND GATE	07263	74LS1DPCQR
A10U1406	156-0479-02			MICROCKT,DGTL:QUAD 2-INP OR GATE	01295	SN74LS32NP3
A10U1407	156-0469-02			MICROCKT,DGTL:3/8 LINE DCDR	01295	SN74LS138NP3
A10U1408	156-0469-02			MICROCKT,DGTL:3/8 LINE DCDR	01295	SN74LS138NP3
A10U1409	156-1065-01			MICROCKT,DGTL:OCTAL D TYPE TRANS LATCHES	04713	SN74LS373 ND/JD
A10U1410	156-0388-03			MICROCKT,DGTL:DUAL D FLIP-FLOP	01295	SN74LS74ANP3
A10U1411	156-0545-01			MICROCKT,DGTL:12 BIT BINARY CNTR	02735	CD4040BFX
A10U1500	156-0956-02			MICROCKT,DGTL:OCTAL BFR W/3 STATE OUT	01295	SN74LS244NP3
A10U1501	156-0852-02			MICROCKT,DGTL:HEX BUS DRVR W/3 STATE OUT	01295	SN74LS367NP3
A10U1502	156-0865-02			MICROCKT,DGTL:OCTAL D FF W/CLEAR	01295	SN74LS273NP3
A10U1503	156-0221-02			MICROCKT,DGTL:QUAD LATCH,W/CLEAR,SCRN	18324	N74175(NB OR FB)
A10U1504	156-0392-03			MICROCKT,DGTL:QUAD LATCH W/CLEAR	07263	74LS175PCQR
A10U1505	156-0756-01			MICROCKT,DGTL:BCD DECIMAL DECODER,SCRN	02735	CD4028BFX
A10U1506	156-0865-02			MICROCKT,DGTL:OCTAL D FF W/CLEAR	01295	SN74LS273NP3
A10U1507	156-1649-00			MICROCKT,DGTL:FLUORESCENT DISPLAY DRIVER	52063	6118P
A10U1508	156-1649-00			MICROCKT,DGTL:FLUORESCENT DISPLAY DRIVER	52063	6118P
A10U1509	156-0525-03			MICROCKT,DGTL:DUAL J-K MASTER SLAVE FF,SEL	04713	MC14027BCLD
A10U1600	156-0387-02			MICROCKT,DGTL:DUAL J-K FF,SCRN	04713	SN74LS73NDS
A10U1601	156-0798-02			MICROCKT,DGTL:DUAL 14/1-LINE SEL/MUX	01295	SN74LS153NP3
A10U1602	156-0388-03			MICROCKT,DGTL:DUAL D FLIP-FLOP	01295	SN74LS74ANP3
A10U1603	156-0798-02			MICROCKT,DGTL:DUAL 14/1-LINE SEL/MUX	01295	SN74LS153NP3
A10U1604	156-1272-00			MICROCKT,LINEAR:DUAL OPERATIONAL AMPLIFIER	18324	NE5532 FE-B
A10U1700	156-0383-02			MICROCKT,DGTL:QUAD 2-INP NOR GATE	18324	N74LS02NB
A10U1802	156-1149-00			MICROCKT,LINEAR:OPERATIONAL AMP,JFET INPUT	27014	LF351N/GLEA134
A10U1803	156-1644-00			MICROCKT,LINEAR:OP AMP,LOW INP BIAS/DRIFT	04713	LM11CLH
A10U1804	156-1384-02			CPLR,OPTOELECTR:OPTICAL ISOLATOR XSTR OUT	09019	H11L3
A10U1805	156-1384-02			CPLR,OPTOELECTR:OPTICAL ISOLATOR XSTR OUT	09019	H11L3
A10U1806	156-1384-02			CPLR,OPTOELECTR:OPTICAL ISOLATOR XSTR OUT	09019	H11L3
A10VR1601	152-0461-00	B010100	B016056	SEMICOND DVC,DI:ZEN,SI,6.2V,5%,0.4W,DO-7	04713	SZG25002K2
A10VR1601	152-0647-00	B016057		SEMICOND DVC,DI:ZENER,SI,6.8V,5%,400MW,DO-7	04713	SZG35014K3RL
A10VR1801	152-0195-00			SEMICOND DVC,DI:ZEN,SI,5.1V,5%,0.4W,DO-7	04713	SZ11755RL
A10VR1802	152-0195-00			SEMICOND DVC,DI:ZEN,SI,5.1V,5%,0.4W,DO-7	04713	SZ11755RL
A10VR1810	152-0127-00			SEMICOND DVC,DI:ZEN,SI,7.5V,5%,0.4W,DO-7	14433	Z5347 (1N958B)
A10VR1811	152-0127-00			SEMICOND DVC,DI:ZEN,SI,7.5V,5%,0.4W,DO-7	14433	Z5347 (1N958B)
A10W1100	131-0566-00			BUS,COND:DUMMY RES,0.094 OD X 0.225L	24546	OWA 07
A10W1101	131-0566-00			BUS,COND:DUMMY RES,0.094 OD X 0.225L	24546	OWA 07
A10W1300	131-0566-00	B010100	B018231	BUS,COND:DUMMY RES,0.094 OD X 0.225L	24546	OWA 07
A10W1300	131-1817-00	B018232		BUS,CONDUCTOR:22AWG,BARE,2.25 L	80009	131-1817-00
A10W1301	131-0566-00	B010100	B018231	BUS,COND:DUMMY RES,0.094 OD X 0.225L	24546	OWA 07
A10W1301	131-1817-00	B018232		BUS,CONDUCTOR:22AWG,BARE,2.25 L	80009	131-1817-00
A10W1400	131-0566-00	B010100	B018231	BUS,COND:DUMMY RES,0.094 OD X 0.225L	24546	OWA 07
A10W1401	131-0566-00	B010100	B018231	BUS,COND:DUMMY RES,0.094 OD X 0.225L	24546	OWA 07
A10W1402	131-0566-00	B010100	B018231	BUS,COND:DUMMY RES,0.094 OD X 0.225L	24546	OWA 07
A10W1402	131-0566-00	B018232		BUS,COND:DUMMY RES,0.094 OD X 0.225L	24546	OWA 07
A10W1405	131-1817-00	B018232		BUS,CONDUCTOR:22AWG,BARE,2.25 L	80009	131-1817-00
A10W1410	131-0566-00	B014070		BUS,COND:DUMMY RES,0.094 OD X 0.225L	24546	OWA 07
A10W1411	131-0566-00	B014070		BUS,COND:DUMMY RES,0.094 OD X 0.225L	24546	OWA 07
A10W1412	131-0566-00	B014070		BUS,COND:DUMMY RES,0.094 OD X 0.225L	24546	OWA 07
A10W1413	131-0566-00	B014070		BUS,COND:DUMMY RES,0.094 OD X 0.225L	24546	OWA 07
A10W1414	131-0566-00	B014070		BUS,COND:DUMMY RES,0.094 OD X 0.225L	24546	OWA 07
A10W1415	131-0566-00	B014070		BUS,COND:DUMMY RES,0.094 OD X 0.225L	24546	OWA 07
A10W1416	131-0566-00	B014070		BUS,COND:DUMMY RES,0.094 OD X 0.225L	24546	OWA 07

Component No.	Tektronix Part No.	Serial/Assembly No. Effective	Dscont	Name & Description	Mfr. Code	Mfr. Part No.
A10N1417	131-0566-00	B014070		BUS,COND:DUMMY RES,0.094 OD X 0.225L	24546	OWA 07
A10N1600	131-0566-00			BUS,COND:DUMMY RES,0.094 OD X 0.225L	24546	OWA 07
A10N1824	131-0566-00	B010100	B018231	BUS,COND:DUMMY RES,0.094 OD X 0.225L	24546	OWA 07
A10N1824	131-1817-00	B018232		BUS,CONDUCTOR:22AWG,BARE,2.25 L	80009	131-1817-00
A10N1832	131-0566-00	B014070	B018231	BUS,COND:DUMMY RES,0.094 OD X 0.225L	24546	OWA 07
A10N2000	175-6644-00			CA ASSY,SP,ELEC:10,26 AWG,3.5 L,RIBBON	80009	175-6644-00
A10N2050	175-6643-00			CA ASSY,SP,ELEC:9,26 AWG,3.5 L,RIBBON	80009	175-6643-00
A10N2100	198-4875-00			CABLE ASSY,RF:2-50 OHM COAX,8.125 L	80009	198-4875-00
A10N2200	175-6641-00			CA ASSY,SP,ELEC:6,26 AWG,9.0 L,RIBBON	80009	175-6641-00
A10N2300	198-5136-00			CA ASSY,SP,ELEC:50 OHM COAX,RBN CABLE,12.0	80009	198-5136-00
A10N2400	175-6639-00			CA ASSY,SP,ELEC:5,26 AWG,10.0 L,RIBBON	80009	175-6639-00
A10N2500	175-6645-00			CABLE ASSY,RF:50 OHM COAX,9.0 L,9-5	80009	175-6645-00
A10N2600	175-6827-00			CABLE ASSY,RF:50 OHM COAX,10.25 L,8-6	80009	175-6827-00
A10N2700	175-6637-00			CA ASSY,SP,ELEC:3,26 AWG,11.0 L,RIBBON	80009	175-6637-00
A10N2800	175-6636-00			CA ASSY,SP,ELEC:5,26 AWG,15.0 L,RIBBON	80009	175-6636-00
A10N2900	175-8256-00			CABLE ASSY,RF:50 OHM COAX,22.5 L,9-N	80009	175-8256-00
A10Y1300	158-0129-00			XTAL UNIT,QTZ:10MHZ 0.001%,PARALLEL	00136	20-9-1

Component No.	Tektronix Part No.	Serial/Assembly No. Effective	Discont	Name & Description	Mfr. Code	Mfr. Part No.
A11	672-1139-00	B010100	B013488	CIRCUIT BD ASSY:COUNTER (OPTION 14 ONLY)	80009	672-1139-00
A11	672-1139-01	B013490	B014069	CIRCUIT BD ASSY:COUNTER (OPTION 14 ONLY) (SAME AS A10 EXCEPT AS LISTED)	80009	672-1139-01
A11	672-1139-02	B014070	B018231	CIRCUIT BD ASSY:COUNTER (OPTION 14 ONLY) (SAME AS A10, EXCEPT AS LISTED)	80009	672-1139-02
A11	672-1139-03	B018232		CIRCUIT BD ASSY:COUNTER (OPTION 14 ONLY) (SAME AS A10, EXCEPT AS LISTED)	80009	672-1139-03
A11C1312	281-0775-00			CAP,FXD,CER DI:0.1UF,20%,50V	04222	MA205E104MAA
A11U1304	119-0262-00			OSCILLATOR,RF:XTAL CONTROLLED,5MHZ ADJ	34630	001-45000
A11U1305	156-1261-00			MICROCKT,LINEAR:VOLTAGE REGULATOR	04713	MC78L15ACP

Component No.	Tektronix Part No.	Serial/Assembly No. Effective	Dscont	Name & Description	Mfr. Code	Mfr. Part No.
A12	670-7422-00	B010100	B012999	CIRCUIT BD ASSY:MULTIMETER CONTROL	80009	670-7422-00
A12	670-7422-01	B013000	B014069	CIRCUIT BD ASSY:MULTIMETER CONTROL	80009	670-7422-01
A12	670-7422-02	B014070	B018231	CIRCUIT BD ASSY:MULTIMETER CONTROL,PARTIAL	80009	670-7422-02
A12	670-7422-03	B018232		CIRCUIT BD ASSY:MULTIMETER CONTROL,PARTIAL	80009	670-7422-03
A12C1901	281-0813-00			CAP,FXD,CER DI:0.047UF,20%,50V	05397	C412C473M5V2CA
A12C1902	281-0813-00			CAP,FXD,CER DI:0.047UF,20%,50V	05397	C412C473M5V2CA
A12C1903	290-0747-00			CAP,FXD,ELCTLT:100UF,+50-10%,25V	54473	ECE-B25V100L
A12C1904	290-0747-00			CAP,FXD,ELCTLT:100UF,+50-10%,25V	54473	ECE-B25V100L
A12C1906	290-0527-00			CAP,FXD,ELCTLT:15UF,20%,20V	05397	T3688156M020AS
A12C1907	290-0136-00	B010100	B017648	CAP,FXD,ELCTLT:2.2UF,20%,20V	05397	T3228225M020AS
A12C1907	290-0136-02	B017649		CAP,FXD,ELCTLT:2.2UF,20%,20V	56289	1730225X0020V
A12C1908	290-0524-02	B010100	B018231	CAP,FXD,ELCTLT:4.7UF,20%,10VDC	05397	T361A475M010AS
A12C1908	290-0524-01	B018232		CAP,FXD,ELCTLT:4.7UF,20%,10V	05397	T368 (ADVISE)
A12C1909	290-0524-02	B010100	B018231	CAP,FXD,ELCTLT:4.7UF,20%,10VDC	05397	T361A475M010AS
A12C1909	290-0524-01	B018232		CAP,FXD,ELCTLT:4.7UF,20%,10V	05397	T368 (ADVISE)
A12C1910	281-0865-00			CAP,FXD,CER DI:1000PF,5%,100V	04222	MA101A102JAA
A12C1911	285-1242-00			CAP,FXD,PLASTIC:0.033UF,10%,250V	55112	171/.033/K/250/C
A12C1912	281-0865-00			CAP,FXD,CER DI:1000PF,5%,100V	04222	MA101A102JAA
A12C1913	290-0743-00			CAP,FXD,ELCTLT:100UF,+50%-10%,16V	54473	ECE-B16V100L
A12C1914	281-0865-00			CAP,FXD,CER DI:1000PF,5%,100V	04222	MA101A102JAA
A12C1915	283-0198-00	B010100	B018231	CAP,FXD,CER DI:0.22UF,20%,50V	05397	C330C224M5U1CA
A12C1915	281-0775-00	B018232		CAP,FXD,CER DI:0.1UF,20%,50V	04222	MA205E104MAA
A12C1916	281-0813-00			CAP,FXD,CER DI:0.047UF,20%,50V	05397	C412C473M5V2CA
A12C1917	285-1242-00			CAP,FXD,PLASTIC:0.033UF,10%,250V	55112	171/.033/K/250/C
A12C1918	281-0813-00			CAP,FXD,CER DI:0.047UF,20%,50V	05397	C412C473M5V2CA
A12C1919	283-0198-00	B010100	B012999	CAP,FXD,CER DI:0.22UF,20%,50V	05397	C330C224M5U1CA
A12C1970	281-0813-00			CAP,FXD,CER DI:0.047UF,20%,50V	05397	C412C473M5V2CA
A12C1975	283-0198-00	B010100	B018231	CAP,FXD,CER DI:0.22UF,20%,50V	05397	C330C224M5U1CA
A12C1975	281-0775-00	B018232		CAP,FXD,CER DI:0.1UF,20%,50V	04222	MA205E104MAA
A12C1976	283-0198-00	B010100	B018231	CAP,FXD,CER DI:0.22UF,20%,50V	05397	C330C224M5U1CA
A12C1976	281-0775-00	B018232		CAP,FXD,CER DI:0.1UF,20%,50V	04222	MA205E104MAA
A12C1982	281-0809-00			CAP,FXD,CER DI:200 PF,5%,100V	04222	MA101A201JAA
A12CR1901	152-0245-00	B010100	B016056	SEMICOND DVC,DI:SM,SI,40V,DO-7	03508	DA2740
A12CR1901	152-0246-00	B016057		SEMICOND DVC,DI:SM,SI,40V,200MA,DO-7	14433	MG1537TK
A12CR1902	152-0245-00	B010100	B016056	SEMICOND DVC,DI:SM,SI,40V,DO-7	03508	DA2740
A12CR1902	152-0246-00	B016057		SEMICOND DVC,DI:SM,SI,40V,200MA,DO-7	14433	MG1537TK
A12CR1905	152-0141-02			SEMICOND DVC,DI:SM,SI,30V,150MA,30V,DO-35	03508	DA2527 (1N4152)
A12CR1906	152-0141-02			SEMICOND DVC,DI:SM,SI,30V,150MA,30V,DO-35	03508	DA2527 (1N4152)
A12CR1907	152-0141-02			SEMICOND DVC,DI:SM,SI,30V,150MA,30V,DO-35	03508	DA2527 (1N4152)
A12CR1908	152-0141-02			SEMICOND DVC,DI:SM,SI,30V,150MA,30V,DO-35	03508	DA2527 (1N4152)
A12CR1909	152-0141-02			SEMICOND DVC,DI:SM,SI,30V,150MA,30V,DO-35	03508	DA2527 (1N4152)
A12CR1910	152-0141-02			SEMICOND DVC,DI:SM,SI,30V,150MA,30V,DO-35	03508	DA2527 (1N4152)
A12CR1970	152-0245-00			SEMICOND DVC,DI:SM,SI,40V,DO-7	03508	DA2740
A12CR1971	152-0245-00			SEMICOND DVC,DI:SM,SI,40V,DO-7	03508	DA2740
A12CR1975	152-0141-02			SEMICOND DVC,DI:SM,SI,30V,150MA,30V,DO-35	03508	DA2527 (1N4152)
A12CR1984	152-0141-02			SEMICOND DVC,DI:SM,SI,30V,150MA,30V,DO-35	03508	DA2527 (1N4152)
A12P1900	131-0592-00			TERMINAL,PIN:0.885 L X 0.025 SQ BRS	80009	131-0592-00
A12P1901	131-0592-00			TERMINAL,PIN:0.885 L X 0.025 SQ BRS	80009	131-0592-00
A12P1902	131-0592-00			TERMINAL,PIN:0.885 L X 0.025 SQ BRS	80009	131-0592-00
A12P1903	131-0592-00			TERMINAL,PIN:0.885 L X 0.025 SQ BRS	80009	131-0592-00
A12P1905	131-0592-00			TERMINAL,PIN:0.885 L X 0.025 SQ BRS	80009	131-0592-00
A12P1906	131-0592-00			TERMINAL,PIN:0.885 L X 0.025 SQ BRS	80009	131-0592-00
A12P1907	131-0592-00			TERMINAL,PIN:0.885 L X 0.025 SQ BRS	80009	131-0592-00
A12P1910	131-0592-00			TERMINAL,PIN:0.885 L X 0.025 SQ BRS	80009	131-0592-00
A12P1911	131-0592-00			TERMINAL,PIN:0.885 L X 0.025 SQ BRS	80009	131-0592-00
A12P1912	131-0592-00			TERMINAL,PIN:0.885 L X 0.025 SQ BRS	80009	131-0592-00
A12P1920	131-0592-00			TERMINAL,PIN:0.885 L X 0.025 SQ BRS	80009	131-0592-00
A12P1921	131-0592-00			TERMINAL,PIN:0.885 L X 0.025 SQ BRS	80009	131-0592-00
A12P1922	131-0592-00			TERMINAL,PIN:0.885 L X 0.025 SQ BRS	80009	131-0592-00

Component No.	Tektronix Part No.	Serial/Assembly No. Effective	Dscont	Name & Description	Mfr. Code	Mfr. Part No.
A12P1923	131-0592-00			TERMINAL,PIN:0.885 L X 0.025 SQ BRS	80009	131-0592-00
A12P1924	131-0592-00			TERMINAL,PIN:0.885 L X 0.025 SQ BRS	80009	131-0592-00
A12P1925	131-0592-00			TERMINAL,PIN:0.885 L X 0.025 SQ BRS	80009	131-0592-00
A12Q1901	151-0254-00			TRANSISTOR:DARLINGTON,NPN,SI	03508	X38L3118
A12Q1902	151-0254-00			TRANSISTOR:DARLINGTON,NPN,SI	03508	X38L3118
A12Q1903	151-0254-00			TRANSISTOR:DARLINGTON,NPN,SI	03508	X38L3118
A12Q1904	151-0254-00			TRANSISTOR:DARLINGTON,NPN,SI	03508	X38L3118
A12Q1910	151-0736-00			TRANSISTOR:NPN,SI,TO-92	80009	151-0736-00
A12Q1911	151-0736-00	B010100	B018231	TRANSISTOR:NPN,SI,TO-92	80009	151-0736-00
A12Q1911	151-0736-01	B018232		TRANSISTOR:NPN,SI,TO-92	80009	151-0736-01
A12Q1970	151-0188-00	B010100	B018231	TRANSISTOR:PNP,SI,TO-92	80009	151-0188-00
A12Q1970	151-0188-05	B018232		TRANSISTOR:PNP,SI,TO-92	07263	S44293(AMMOPACK)
A12R1902	321-0289-02			RES,FXD,FILM:10.0K OHM,0.5%,0.125M,TC=T2	19701	5033RC10K00D
A12R1903	321-0696-00			RES,FXD,FILM:40.2K OHM,0.5%,0.125M,TC=T2	19701	5033RC40K20D
A12R1904	311-1489-00			RES,VAR,NONWW:500 OHM,10%,0.75W	02111	43P501T672
A12R1905	315-0243-00			RES,FXD,FILM:24K OHM,5%,0.25W	57668	NTR25J-E24K0
A12R1906	315-0474-00			RES,FXD,FILM:470K OHM,5%,0.25W	19701	5043CX470K0J92U
A12R1907	315-0241-00			RES,FXD,FILM:240 OHM,5%,0.25W	19701	5043CX240R0J
A12R1908	311-1246-00	B010100	B018231	RES,VAR,NONWW:TRMR,50K OHM,0.5W	32997	3386X-T07-503
A12R1908	311-2267-00	B018232		RES,VAR,NONWW:TRMR,50K OHM,20%,0.5W	TK1450	GF06VT B50K-OHM
A12R1909	315-0562-00			RES,FXD,FILM:5.6K OHM,5%,0.25W	57668	NTR25J-E05K6
A12R1910	315-0431-00			RES,FXD,FILM:430 OHM,5%,0.25W	19701	5043CX430R0J
A12R1911	315-0102-00			RES,FXD,FILM:1K OHM,5%,0.25W	57668	NTR25JE01K0
A12R1912	315-0224-00			RES,FXD,FILM:220K OHM,5%,0.25W	57668	NTR25J-E220K
A12R1913	315-0562-00			RES,FXD,FILM:5.6K OHM,5%,0.25W	57668	NTR25J-E05K6
A12R1916	315-0104-00			RES,FXD,FILM:100K OHM,5%,0.25W	57668	NTR25J-E100K
A12R1917	315-0623-00			RES,FXD,FILM:62K OHM,5%,0.25W	19701	5043CX62K00J
A12R1918	315-0103-00			RES,FXD,FILM:10K OHM,5%,0.25W	19701	5043CX10K00J
A12R1919	311-1754-00			RES,VAR,NONWW:TRMR,2K OHM,0.75W	02111	43P202T672
A12R1920	321-0354-00			RES,FXD,FILM:47.5K OHM,1%,0.125W,TC=T0	19701	5043ED47K50F

A12R1922	311-1339-00			RES,VAR,NONWW:TRMR,5K OHM,0.75W	02111	43P502T672
A12R1923	321-0344-00			RES,FXD,FILM:37.4K OHM,1%,0.125W,TC=T0	19701	5033ED 37K40F
A12R1924	315-0203-00			RES,FXD,FILM:20K OHM,5%,0.25W	57668	NTR25J-E 20K
A12R1925	315-0393-00			RES,FXD,FILM:39K OHM,5%,0.25W	57668	NTR25J-E39K0
A12R1926	315-0562-00			RES,FXD,FILM:5.6K OHM,5%,0.25W	57668	NTR25J-E05K6
A12R1927	321-0924-07			RES,FXD,FILM:40K OHM,0.1%,0.125W,TC=T9	19701	5033RE40K00B
A12R1928	321-0289-07			RES,FXD,FILM:10.0K OHM,0.1%,0.125W,TC=T9	19701	5033RE10K00B
A12R1929	315-0101-00			RES,FXD,FILM:100 OHM,5%,0.25W	57668	NTR25J-E 100E
A12R1930	321-0310-00			RES,FXD,FILM:16.5K OHM,1%,0.125W,TC=T0	19701	5033ED16K50F
A12R1931	321-0310-00			RES,FXD,FILM:16.5K OHM,1%,0.125W,TC=T0	19701	5033ED16K50F
A12R1932	321-0420-00			RES,FXD,FILM:232K OHM,1%,0.125W,TC=T0	07716	CEA023202F
A12R1933	321-0312-00			RES,FXD,FILM:17.4K OHM,1%,0.125W,TC=T0	19701	5033ED17K40F
A12R1934	321-0277-00			RES,FXD,FILM:7.50K OHM,1%,0.125W,TC=T0	24546	N055D7501F
A12R1935	315-0104-00			RES,FXD,FILM:100K OHM,5%,0.25W	57668	NTR25J-E100K
A12R1936	315-0104-00			RES,FXD,FILM:100K OHM,5%,0.25W	57668	NTR25J-E100K
A12R1937	315-0103-00			RES,FXD,FILM:10K OHM,5%,0.25W	19701	5043CX10K00J
A12R1938	315-0103-00			RES,FXD,FILM:10K OHM,5%,0.25W	19701	5043CX10K00J
A12R1939	315-0104-00			RES,FXD,FILM:100K OHM,5%,0.25W	57668	NTR25J-E100K
A12R1941	315-0122-00			RES,FXD,FILM:1.2K OHM,5%,0.25W	57668	NTR25J-E01K2
A12R1942	315-0103-00			RES,FXD,FILM:10K OHM,5%,0.25W	19701	5043CX10K00J
A12R1943	321-0248-00			RES,FXD,FILM:3.74K OHM,1%,0.125W,TC=T0	19701	5043ED3K740F
A12R1944	315-0101-00			RES,FXD,FILM:100 OHM,5%,0.25W	57668	NTR25J-E 100E
A12R1945	315-0103-00			RES,FXD,FILM:10K OHM,5%,0.25W	19701	5043CX10K00J
A12R1951	315-0224-00			RES,FXD,FILM:220K OHM,5%,0.25W	57668	NTR25J-E220K
A12R1952	315-0224-00			RES,FXD,FILM:220K OHM,5%,0.25W	57668	NTR25J-E220K
A12R1953	315-0224-00			RES,FXD,FILM:220K OHM,5%,0.25W	57668	NTR25J-E220K
A12R1954	315-0224-00			RES,FXD,FILM:220K OHM,5%,0.25W	57668	NTR25J-E220K
A12R1960	315-0201-02			RES,FXD,CMPSN:200 OHM,5%,0.25W	01121	CB2015
A12R1962	315-0511-00	B010100	B014069	RES,FXD,FILM:510 OHM,5%,0.25W	19701	5043CX510R0J

Component No.	Tektronix Part No.	Serial/Assembly No. Effective	Dscont	Name & Description	Mfr. Code	Mfr. Part No.
A12R1962	315-0201-00	B014070		RES,FXD,FILM:200 OHM,5%,0.25W	57668	NTR25J-E200E
A12R1965	311-1339-00	B010100	B014069	RES,VAR,NONWW:TRMR,5K OHM,0.75W	02111	43P502T672
A12R1965	311-1754-00	B014070		RES,VAR,NONWW:TRMR,2K OHM,0.75W	02111	43P202T672
A12R1966	311-1339-00	B010100	B014069	RES,VAR,NONWW:TRMR,5K OHM,0.75W	02111	43P502T672
A12R1966	311-1754-00	B014070		RES,VAR,NONWW:TRMR,2K OHM,0.75W	02111	43P202T672
A12R1967	311-1339-00	B010100	B014069	RES,VAR,NONWW:TRMR,5K OHM,0.75W	02111	43P502T672
A12R1967	311-1754-00	B014070		RES,VAR,NONWW:TRMR,2K OHM,0.75W	02111	43P202T672
A12R1970	315-0103-00			RES,FXD,FILM:10K OHM,5%,0.25W	19701	5043CX10K00J
A12R1973	315-0106-00			RES,FXD,FILM:10M OHM,5%,0.25W	01121	CB1065
A12R1975	315-0104-00			RES,FXD,FILM:100K OHM,5%,0.25W	57668	NTR25J-E100K
A12R1976	315-0823-00			RES,FXD,FILM:82K OHM,5%,0.25W	57668	NTR25J-E82K
A12R1977	315-0683-00			RES,FXD,FILM:68K OHM,5%,0.25W	57668	NTR25J-E68K0
A12R1978	315-0562-00			RES,FXD,FILM:5.6K OHM,5%,0.25W	57668	NTR25J-E05K6
A12R1980	315-0102-00			RES,FXD,FILM:1K OHM,5%,0.25W	57668	NTR25JE01K0
A12R1981	315-0101-00			RES,FXD,FILM:100 OHM,5%,0.25W	57668	NTR25J-E 100E
A12R1982	315-0473-00			RES,FXD,FILM:47K OHM,5%,0.25W	57668	NTR25J-E47K0
A12R1983	305-0243-00			RES,FXD,CMPSN:24K OHM,5%,2W	01121	HB2435
A12R1984	321-0369-00			RES,FXD,FILM:68.1K OHM,1%,0.125W,TC=T0	19701	5043ED68K10F
A12RT1915	307-0662-00			RES,THERMAL:1K OHM,40%	50157	180Q10216
A12U1900	156-1200-00			MICROCKT,LINEAR:OPERATIONAL AMP,QUAD BI-FET	01295	TL074CN
A12U1901	156-1149-00			MICROCKT,LINEAR:OPERATIONAL AMP,JFET INPUT	27014	LF351N/GLEA134
A12U1902	156-1457-00			MICROCKT,LINEAR:TRUE RMS CONVERTER	24355	AD41127
A12U1903	156-1173-00			MICROCKT,LINEAR:VOLTAGE REFERENCE	04713	MC1403U0S
A12U1904	156-0402-00			MICROCKT,LINEAR:TIMER	27014	LM555CN
A12U1905	156-0513-00			MICROCKT,LINEAR:CMOS,8-CHANNEL MUX	04713	MC14051BCL
A12U1906	156-0796-00			MICROCKT,DGTL:8 STG SHF & STORE BUS RGTR	02735	CD4094BF
A12U1907	156-0515-00			MICROCKT,DGTL:CMOS,TRIPLE 3-CHAN MUX	02735	CD4053BF
A12U1908	156-1362-00			MICROCKT,LINEAR:V-TO-FREQUENCY CONVERTER	27014	LM331N
A12U1909	156-0515-00			MICROCKT,DGTL:CMOS,TRIPLE 3-CHAN MUX	02735	CD4053BF
A12U1950	156-1149-00			MICROCKT,LINEAR:OPERATIONAL AMP,JFET INPUT	27014	LF351N/GLEA134
A12V9900	150-1110-00			DISPLAY,FLUOR:9 DIGIT,ALPHANUMERIC	TK1269	FG94C1A
A12VR1901	152-0127-00			SEMICOND DVC,DI:ZEN,SI,7.5V,5%,0.4W,DO-7	14433	Z5347 (1N958B)
A12VR1902	152-0127-00			SEMICOND DVC,DI:ZEN,SI,7.5V,5%,0.4W,DO-7	14433	Z5347 (1N958B)
A12VR1903	152-0055-00			SEMICOND DVC,DI:ZEN,SI,11V,5%,0.4W,DO-7	14433	Z5407
A12VR1904	152-0055-00			SEMICOND DVC,DI:ZEN,SI,11V,5%,0.4W,DO-7	14433	Z5407

Component No.	Tektronix Part No.	Serial/Assembly No. Effective	Dscont	Name & Description	Mfr. Code	Mfr. Part No.
A13	670-7423-00	B010100	B014069	CIRCUIT BD ASSY:DISPLAY	80009	670-7423-00
A13	670-7423-01	B014070	B018231	CIRCUIT BD ASSY:DISPLAY,PARTIAL	80009	670-7423-01
A13	670-7423-02	B018232		CIRCUIT BD ASSY:DISPLAY,PARTIAL	80009	670-7423-02
A13P2000	131-0608-00			TERMINAL,PIN:0.365 L X 0.025 BRZ GLD PL (QUANTITY OF 10)	22526	48283-036
A13P2050	131-0608-00			TERMINAL,PIN:0.365 L X 0.025 BRZ GLD PL (QUANTITY OF 9)	22526	48283-036
A13V9900	150-1110-00			DISPLAY,FLUOR:9 DIGIT,ALPHANUMERIC	TK1269	FG94C1A

Component No.	Tektronix Part No.	Serial/Assembly No. Effective	Dscont	Name & Description	Mfr. Code	Mfr. Part No.
A14	670-7434-00			CIRCUIT BD ASSY:HOT SIGNAL SWITCH BOARD	80009	670-7434-00
A14S1801	260-2079-00			SWITCH,PUSH:5 BUTTON,2/6/8 POLE,DWM	59821	ORDER BY DESCR
A14S1802	260-2080-00			SWITCH,PUSH:1 BUTTON,8 POLE,DWM	59821	ORDER BY DESCR

Component No.	Tektronix Part No.	Serial/Assembly No. Effective	Dscont	Name & Description	Mfr. Code	Mfr. Part No.
A15	670-7575-00			CIRCUIT BD ASSY:LOGIC	80009	670-7575-00
A15C3101	281-0775-00			CAP,FXD,CER DI:0.1UF,20%,50V	04222	MA205E104MAA
A15C3102	281-0775-00			CAP,FXD,CER DI:0.1UF,20%,50V	04222	MA205E104MAA
A15C3103	281-0775-00			CAP,FXD,CER DI:0.1UF,20%,50V	04222	MA205E104MAA
A15C3104	281-0775-00			CAP,FXD,CER DI:0.1UF,20%,50V	04222	MA205E104MAA
A15P2102	131-0787-00			TERMINAL,PIN:0.64 L X 0.025 SQ PH BRZ	22526	47359-000
A15P2800	131-0589-00			TERMINAL,PIN:0.46 L X 0.025 SQ PH BRZ	22526	48283-029
A15P2950	131-0589-00			TERMINAL,PIN:0.46 L X 0.025 SQ PH BRZ	22526	48283-029
A15R3101	315-0102-00			RES,FXD,FILM:1K OHM,5%,0.25W	57668	NTR25JE01K0
A15R3102	315-0102-00			RES,FXD,FILM:1K OHM,5%,0.25W	57668	NTR25JE01K0
A15R3103	315-0102-00			RES,FXD,FILM:1K OHM,5%,0.25W	57668	NTR25JE01K0
A15R3104	315-0102-00			RES,FXD,FILM:1K OHM,5%,0.25W	57668	NTR25JE01K0

Component No.	Tektronix Part No.	Serial/Assembly No. Effective	Dscont	Name & Description	Mfr. Code	Mfr. Part No.
B9965	119-0830-07	~~B010100~~	~~B019710~~	FAN,TUBEAXIAL:12VDC,2.4W,6500 RPM,31 CFM BR USHLESS DC MOTOR	TK0146	69.11.56 W/6"LEA
B9965	119-2071-00	~~B049720~~		FAN,AXIAL:12V,0.95W	80009	119-2071-00
C9001	283-0003-00			CAP,FXD,CER DI:0.01UF,+80-20%,150V	59821	0103Z40Z5UJOCEX
C9272	281-0534-00			CAP,FXD,CER DI:3.3PF,+/-0.25PF,500V	52763	2RDPLZ007 3P30CC
C9273	281-0534-00			CAP,FXD,CER DI:3.3PF,+/-0.25PF,500V	52763	2RDPLZ007 3P30CC
DL9210	119-1515-00			DELAY LINE,ELEC:93NS,150 OHM,ASSEMBLY	80009	119-1515-00
DS9150	150-1071-00			LT EMITTING DIO:GREEN,565NM,20MA MAX	50434	HLMP3910
F9001	159-0041-00			FUSE,CARTRIDGE:3AG,1.25A,250V,20SEC	71400	MSL 1 1/4
FL9001	119-1541-00			FILTER,RFI:1A,250VAC	05245	1EF1
J9100	131-0955-00			CONN,RCPT,ELEC:BNC,FEMALE	13511	31-279
J9510	131-0955-00			CONN,RCPT,ELEC:BNC,FEMALE	13511	31-279
P1900	131-0608-00			TERMINAL,PIN:0.365 L X 0.025 BRZ GLD PL (QUANTITY OF 2)	22526	48283-036
Q9070	151-1152-00			TRANSISTOR:MOSFE,N-CHANNEL,SI,TO-220	04713	IRF820
R9100	315-0560-00			RES,FXD,FILM:56 OHM,5%,0.25W	57668	NTR25J-E56E0
R9272	301-0121-00			RES,FXD,FILM:120 OHM,5%,0.5W	19701	5053CX120K0
R9273	301-0121-00			RES,FXD,FILM:120 OHM,5%,0.5W	19701	5053CX120K0
R9376	315-0510-00	B010100	B014885	RES,FXD,FILM:51 OHM,5%,0.25W	19701	5043CX51R00J
R9376	315-0430-00	B014886		RES,FXD,FILM:43 OHM,5%,0.25W	19701	5043CX43R00J
R9510	315-0560-00			RES,FXD,FILM:56 OHM,5%,0.25W	57668	NTR25J-E56E0
R9521	311-2146-00			RES,VAR,NONWW:CKT BD,50 OHM,20%,0.5W	01121	MA1G040S503MZ
R9644	311-1183-01			RES,VAR,NW:PNL,2K OHM,5%,2W	02111	534-7236
R9802	311-2177-00	B010100	B015801	RES,VAR,NONWW:PNL,10K OHM,20%,0.5W	12697	CW43517
R9802	311-2177-02	B015802		RES,VAR,NONWW:W/PLATE & CABLE	80009	311-2177-02
V9870	154-0861-00			ELECTRON TUBE:	80009	154-0861-00
W2950	195-9709-00			LEAD,ELECTRICAL:26 AWG,1.5 L,1-N	80009	195-9709-00
W9109	195-0065-00			LEAD ASSY,ELEC:(2)26 AWG TW W/(2)47 OHM RES	80009	195-0065-00

DIAGRAMS AND CIRCUIT BOARD ILLUSTRATIONS

Symbols

Graphic symbols and class designation letters are based on ANSI Standard Y32.2-1975.

Logic symbology is based on ANSI Y32.14-1973 in terms of positive logic. Logic symbols depict the logic function performed and may differ from the manufacturer's data.

The overline on a signal name indicates that the signal performs its intended function when it is in the low state.

Abbreviations are based on ANSI Y1.1-1972.

Other ANSI standards that are used in the preparation of diagrams by Tektronix, Inc. are:

Y14.15, 1966	Drafting Practices.
Y14.2, 1973	Line Conventions and Lettering.
Y10.5, 1968	Letter Symbols for Quantities Used in Electrical Science and Electrical Engineering.

American National Standard Institute
1430 Broadway
New York, New York 10018

Component Values

Electrical components shown on the diagrams are in the following units unless noted otherwise:

Capacitors = Values one or greater are in picofarads (pF). Values less than one are in microfarads (μF).

Resistors = Ohms (Ω).

The information and special symbols below may appear in this manual.

Assembly Numbers and Grid Coordinates

Each assembly in the instrument is assigned an assembly number (e.g., A20). The assembly number appears on the circuit board outline on the diagram, in the title for the circuit board component location illustration, and in the lookup table for the schematic diagram and corresponding component locator illustration. The Replaceable Electrical Parts list is arranged by assemblies in numerical sequence; the components are listed by component number *(see following illustration for constructing a component number).

The schematic diagram and circuit board component location illustration have grids. A lookup table with the grid coordinates is provided for ease of locating the component. Only the components illustrated on the facing diagram are listed in the lookup table. When more than one schematic diagram is used to illustrate the circuitry on a circuit board, the circuit board illustration may only appear opposite the first diagram on which it was illustrated; the lookup table will list the diagram number of other diagrams that the circuitry of the circuit board appears on.

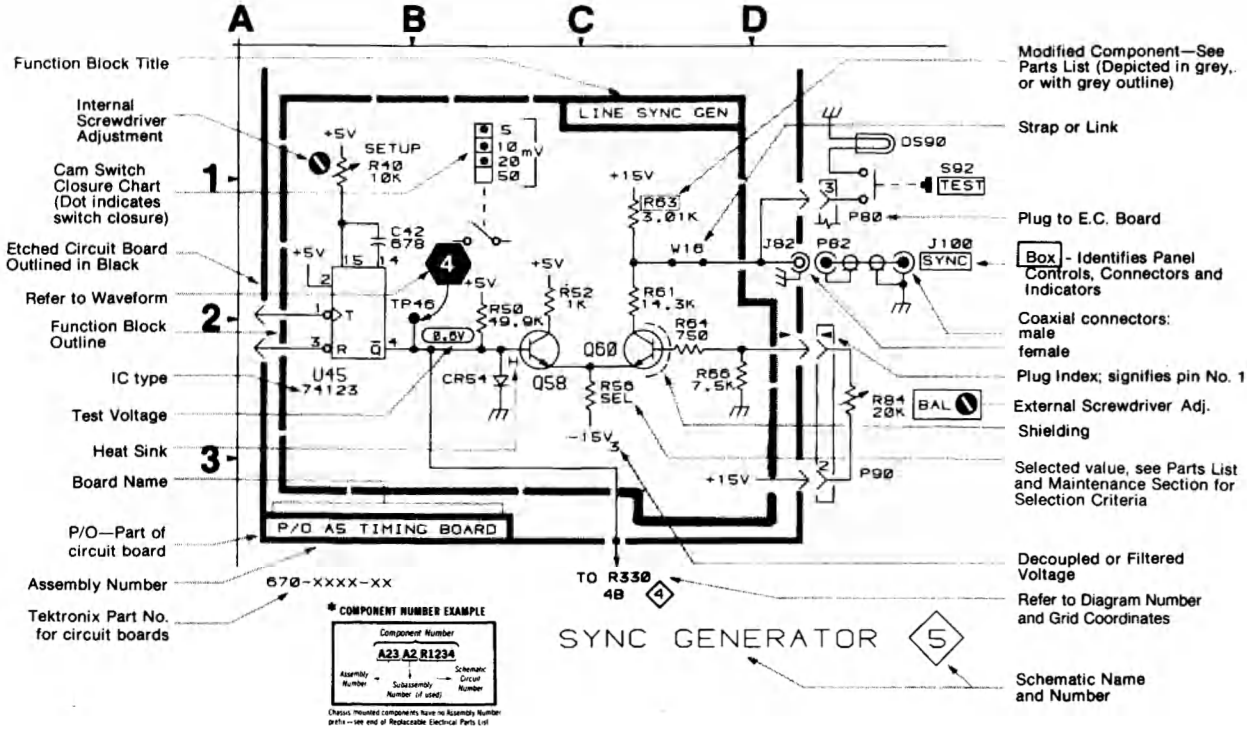

COLOR CODE

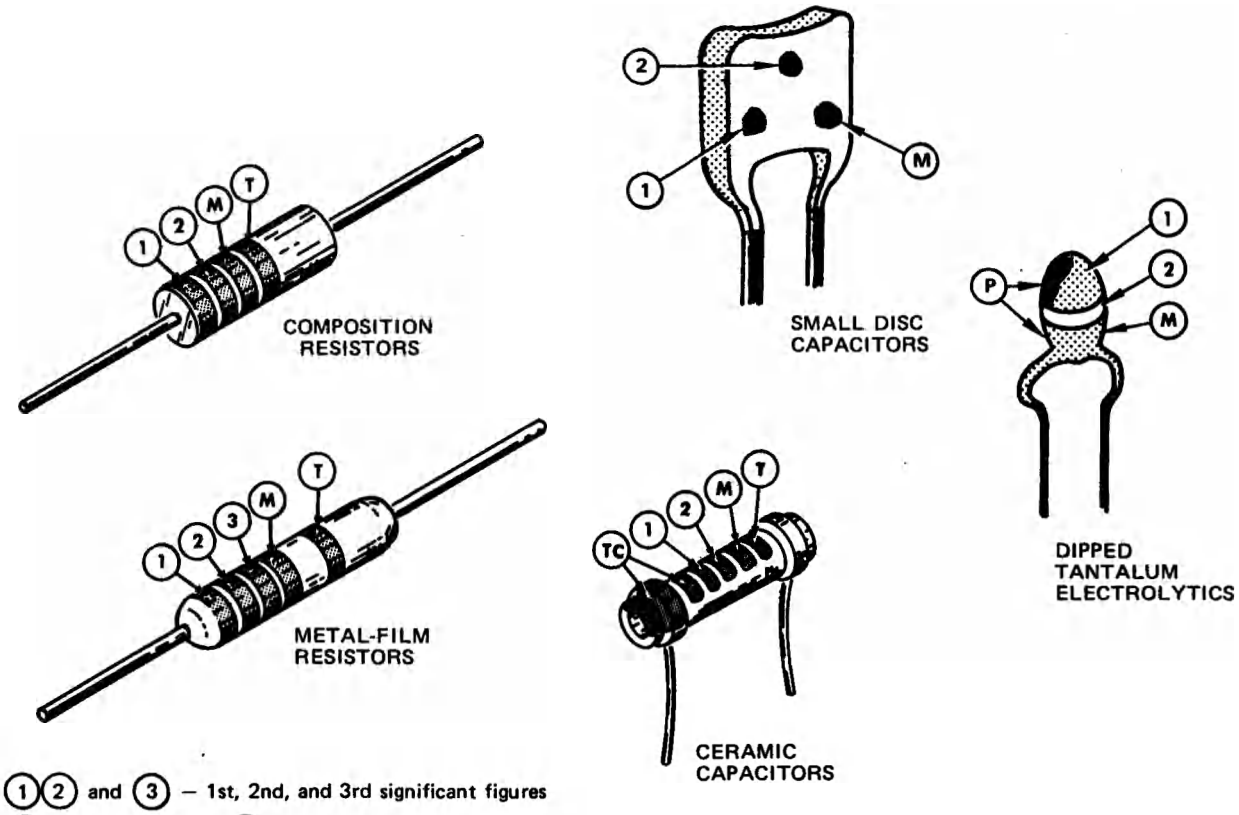

(1) (2) and (3) – 1st, 2nd, and 3rd significant figures

(M) –multiplier (T) –tolerance

(TC) –temperature coefficient

(P) –polarity and voltage rating

(T) and/or (TC) color code may not be present on some capacitors

COLOR	SIGNIFICANT FIGURES	RESISTORS		CAPACITORS			DIPPED TANTALUM VOLTAGE RATING
		MULTIPLIER	TOLERANCE	MULTIPLIER	TOLERANCE		
					over 10 pF	under 10 pF	
BLACK	0	1	---	1	±20%	±2 pF	4 VDC
BROWN	1	10	±1%	10	±1%	±0.1 pF	6 VDC
RED	2	10^2 or 100	±2%	10^2 or 100	±2%	---	10 VDC
ORANGE	3	10^3 or 1 K	±3%	10^3 or 1000	±3%	---	15 VDC
YELLOW	4	10^4 or 10 K	±4%	10^4 or 10,000	+100% –9%	---	20 VDC
GREEN	5	10^5 or 100 K	±½%	10^5 or 100,000	±5%	±0.5 pF	25 VDC
BLUE	6	10^6 or 1 M	±¼%	10^6 or 1,000,000	---	---	35 VDC
VIOLET	7	---	±1/10%	---	---	---	50 VDC
GRAY	8	---	---	10^{-2} or 0.01	+80% –20%	±0.25 pF	---
WHITE	9	---	---	10^{-1} or 0.1	±10%	±1 pF	3 VDC
GOLD	–	10^{-1} or 0.1	±5%	---	---	---	---
SILVER	–	10^{-2} or 0.01	±10%	---	---	---	---
NONE	–	---	±20%	---	±10%	±1 pF	---

(1861-20A) 2662-48

Figure 9-1. Color codes for resistors and capacitors.

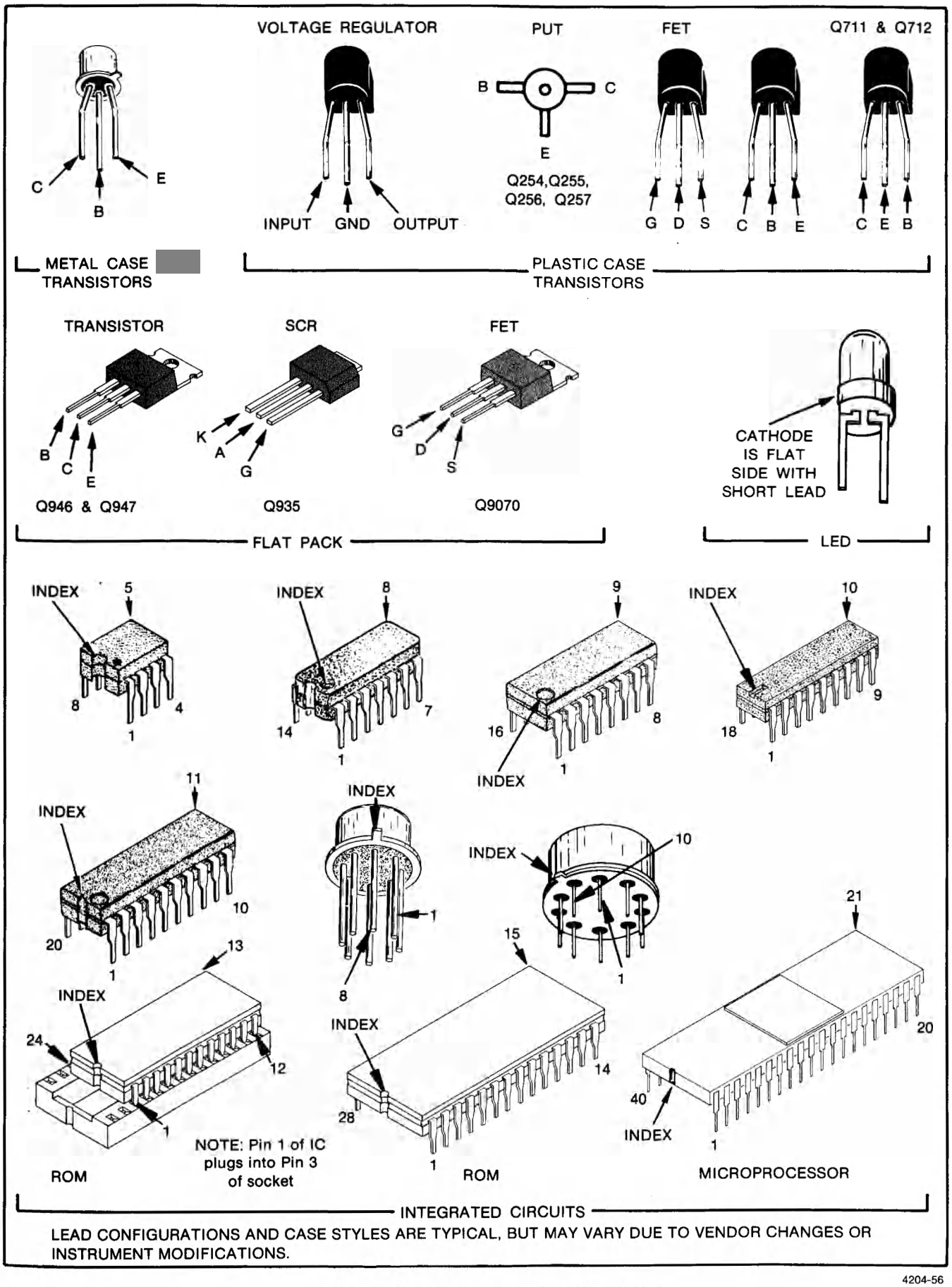

4204-56

Figure 9-2. Semiconductor lead configurations.

To identify any component mounted on a circuit board and to locate that component in the appropriate schematic diagram

1. Locate the Circuit Board Illustration

a. Identify the particular circuit board that the component is located on by using the Circuit Board Location illustration (Figure 9-5) to determine the Assembly Number.

b. In the manual locate and pull out tabbed page whose title corresponds with the Assembly Number of the circuit board. Circuit board assembly numbers and board nomenclature are printed on the back side of the tabs (facing the rear of the manual).

2. Determine the Circuit Number

a. Compare the circuit board with its illustration and locate the desired component by area and shape on the illustration.

b. Scan the table adjacent to the Circuit Board Illustration and find the Circuit Number of the desired component.

c. Determine the Schematic Diagram Number in which the component is located.

3. Locate the Component on the Schematic Diagram

a. Locate and pull out tabbed page whose number and title correspond with the Schematic Diagram Number just determined in the table. Schematic diagram nomenclature and numbers are printed on the front side of the tabs (facing the front of the manual).

b. Scan the Component Location Table adjacent to the schematic diagram and find the Circuit Number of the desired component.

c. Under the SCHEM LOCATION column, read the grid coordinates for the desired component.

d. Using the Circuit Number and grid coordinates, locate the component on the schematic diagram.

A6 CRT BOARD

COMPONENTS LOCATED ON SCHEMATIC DIAGRAM 10

C602	C632	Q668	R625
C603	C641		R626
C609	C643	R604	R627
C671	C651	R605	R630
C615		R608	R632
C616	Q606	R609	
C617	Q610	R610	
C618	Q615	R614	
C619	Q645	R616	
C624	Q656	R623	
C626	Q665	R624	

COMPONENTS LOCATED ON SCHEMATIC DIAGRAM 11

C670	Q670	R677	
C671	Q672	R679	
C673	Q673	R680	
C680			
C681	R671	U617	
P603	R673	U618	
P607	R674	U619	
Q669	R675		

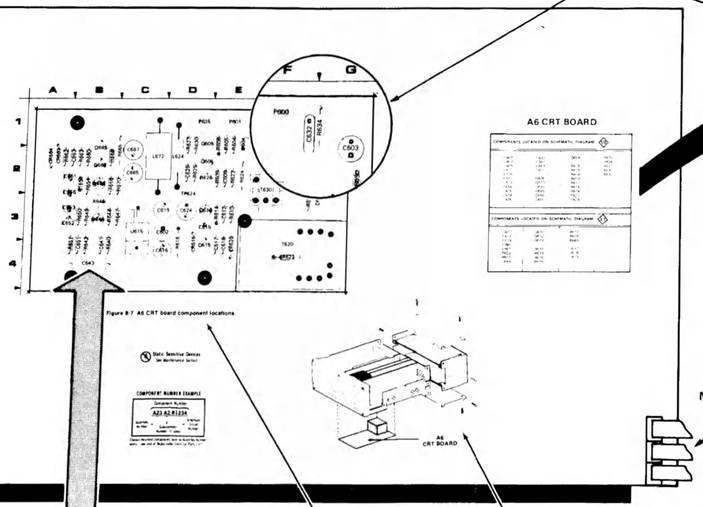

CRT CIRCUIT DIAGRAM 10

A6 ASSEMBLY

CIRCUIT NUMBER	SCHEM LOCATION	BOARD LOCATION	CIRCUIT NUMBER	SCHEM LOCATION	BOARD LOCATION
C602	2C	3C	Q656	2F	2B
C603	1C	1G	Q665	1G	1B
C609	4E	2F	Q668	2G	2B
C612	7C	3E			
C615	7C	3D	R604	4C	1E
C616	2C	3C	R605	5D	1E
C617	7D	3D	R608	4E	1D
C618	7E	3E	R609	4E	2D
C619	6E	3C	R610	7B	3E
C624	4F	3D	R614	7C	3D
C626	7G	2D	R616	1C	3D
C632	8G	1E	R623	4D	2E
C643	3D	4B	R625	7F	2D
C651	3E	3B	R626	7F	2D
		3B	R627	7G	1D
			R630	4F	[illegible]
Q606	4E	2D			
Q610	7C	3D	TP624	3B	2D
Q615	7D	3D			
Q645	3E	3B	U615	1D	3C

CHASSIS MOUNTED PARTS

CIRCUIT NUMBER	SCHEM LOCATION	BOARD LOCATION	CIRCUIT NUMBER	SCHEM LOCATION	BOARD LOCATION
L635	51	CHASSIS	V635	6J	CHASSIS

4. Determine the Circuit Board Illustration and Component Location

a. From the schematic diagram, determine the Assembly Number of the circuit board on which the component is mounted. This information is boxed and located in a corner of the heavy line that distinguishes the board outline.

b. Scan the Component Location Table for the Assembly Number just determined and find the Circuit Number of the desired component.

c. Under the BOARD LOCATION column, read the grid coordinates for the desired component.

5. Locate the Component on the Circuit Board

a. In the manual, locate and pull out the tabbed page whose title and Assembly Number correspond with the desired circuit board. This information is on the back side of the tabs.

b. Using the Circuit Number and grid coordinates, locate the component on the Circuit Board Illustration.

c. In the circuit board location illustration, determine the location of the circuit board in the instrument.

d. Find the circuit board in the instrument and compare it with its illustration in the manual to locate the desired component on the board.

Figure 9-3. Locating components on schematic diagrams and circuit board illustrations.

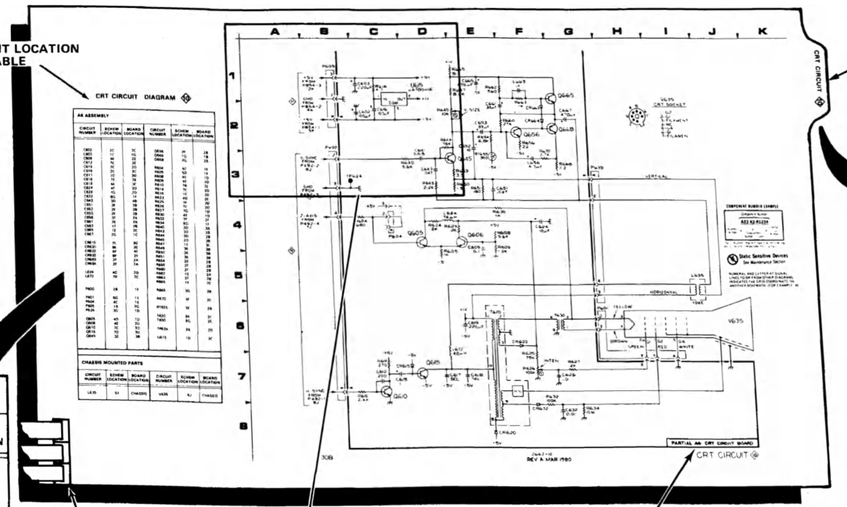

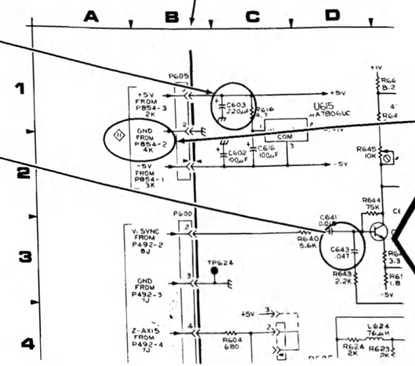

Numeral and letter at signal lines to or from other diagrams indicates the grid coordinates on another schematic (for example: 4E)

To identify any component in a schematic diagram and to locate that component on its respective circuit board.

4204-58

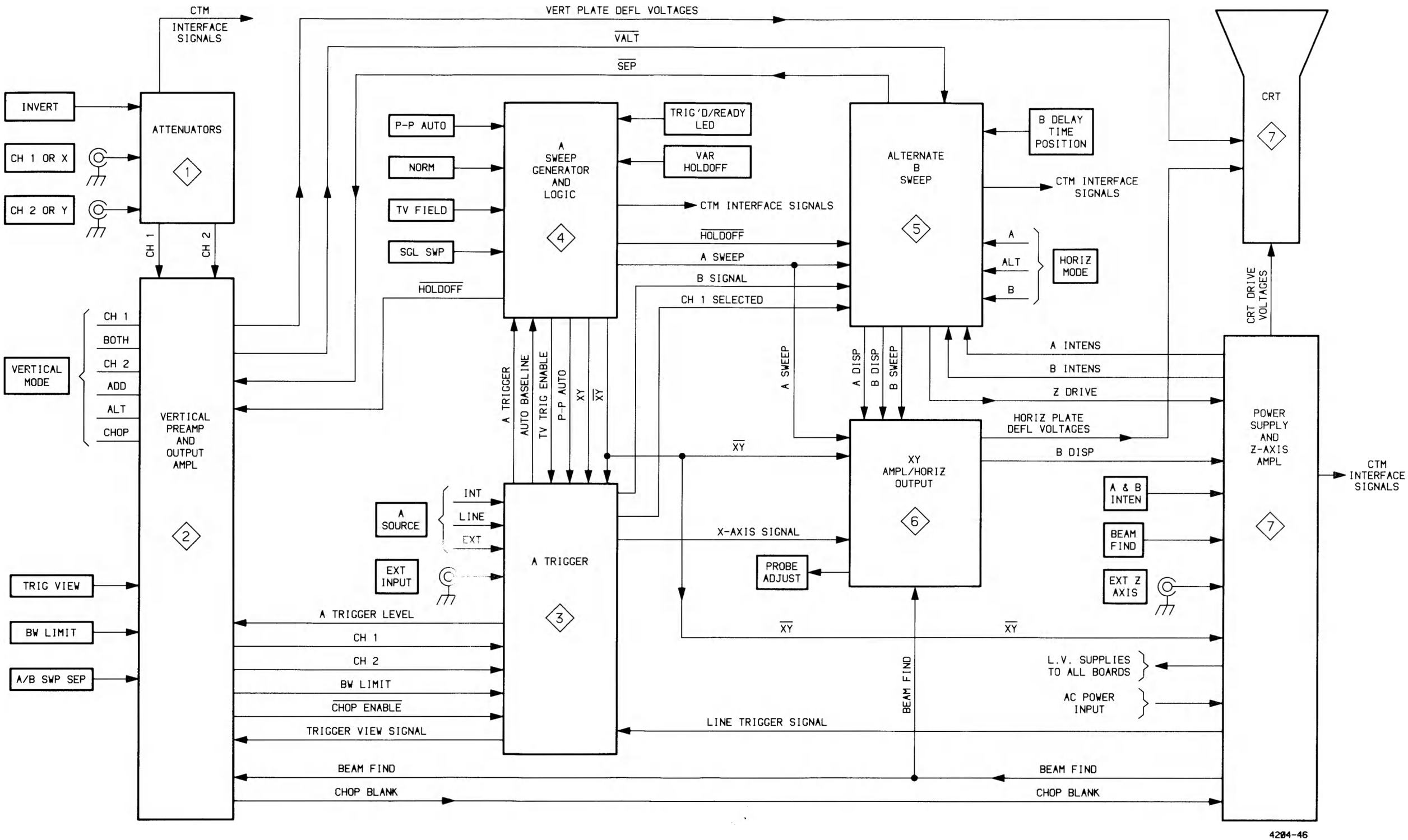

Figure 9-4. Oscilloscope basic block diagram.

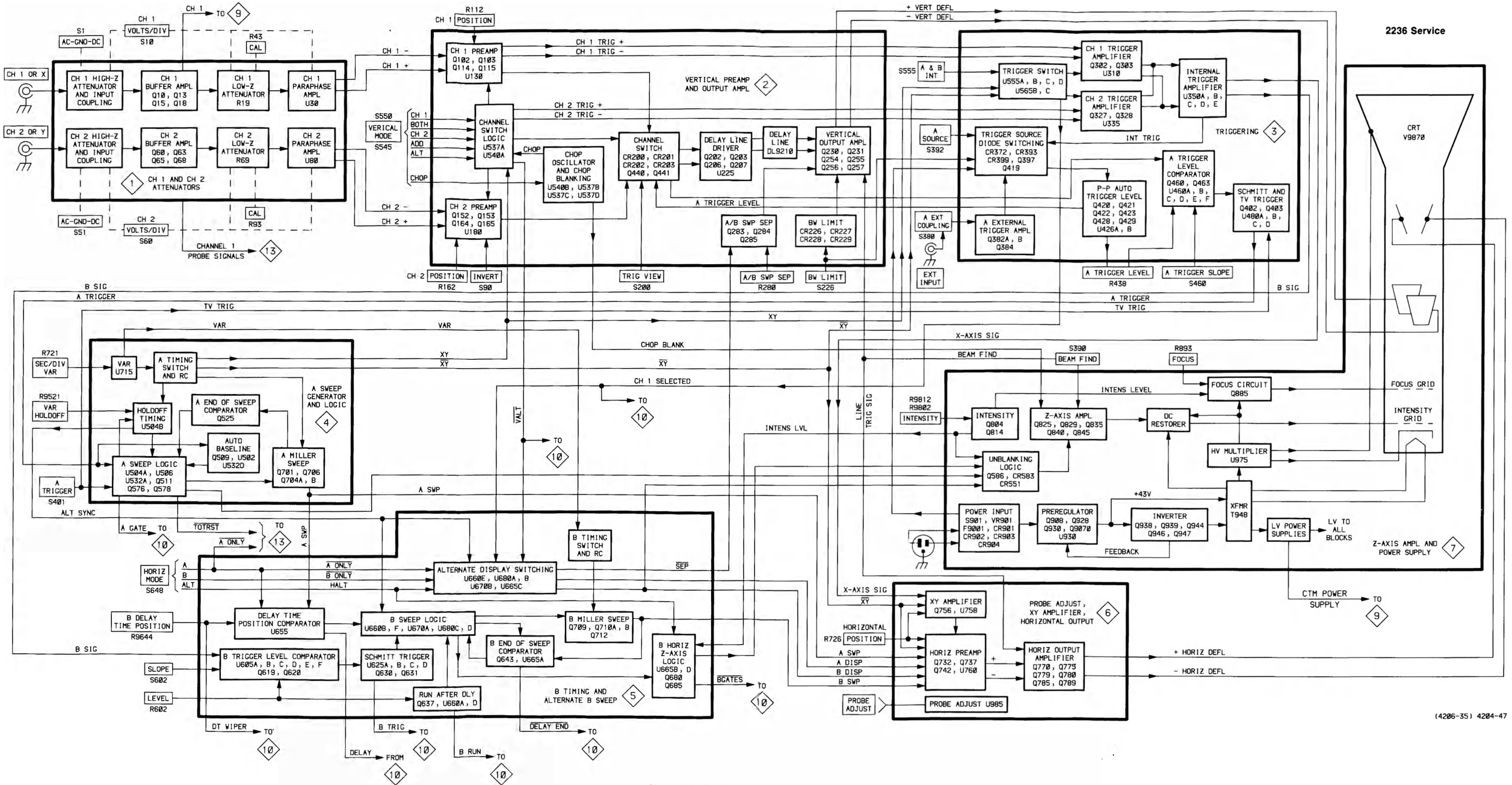

Figure 9-5. Oscilloscope detailed block diagram.

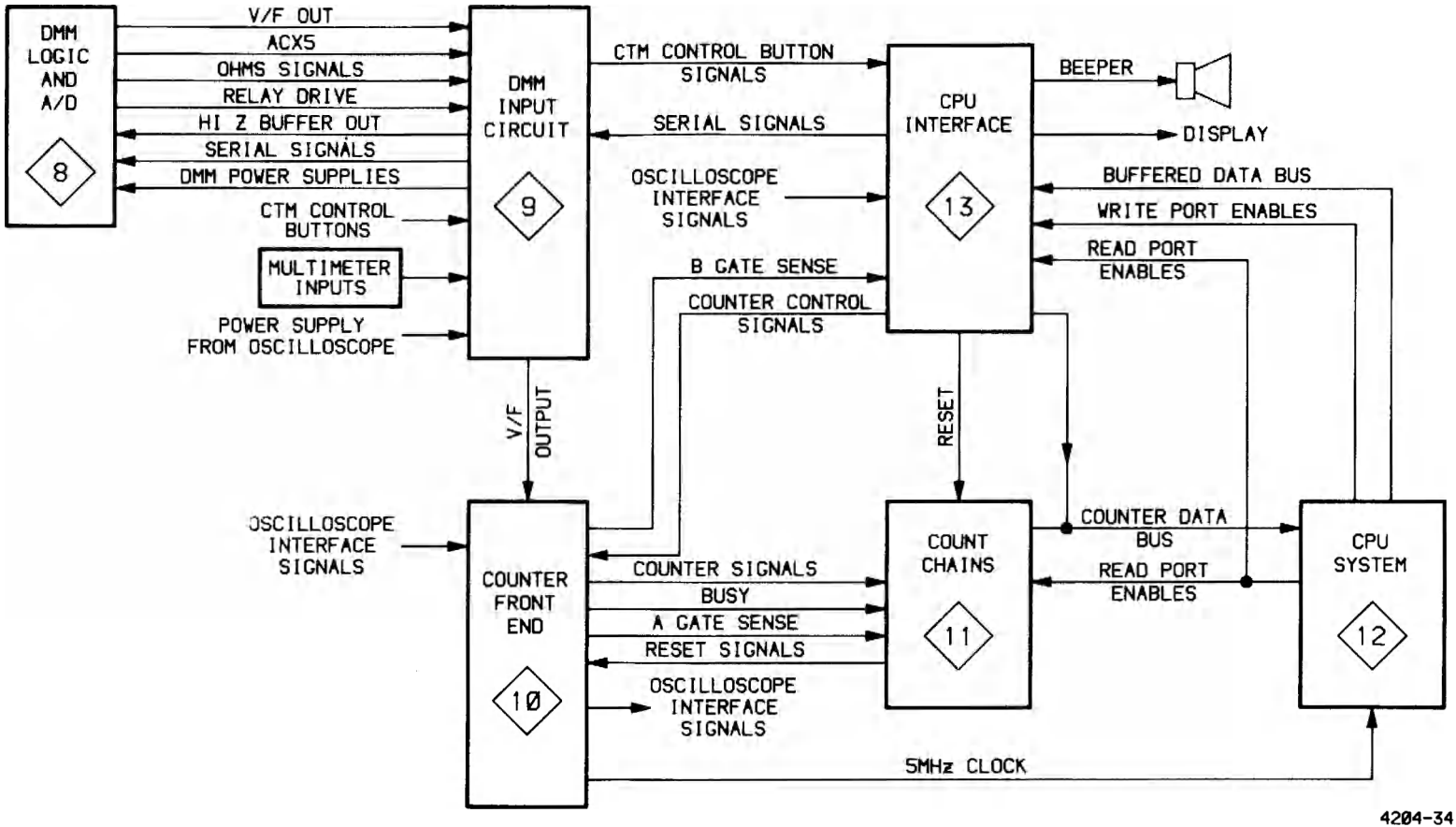

Figure 9-6. CTM basic block diagram.

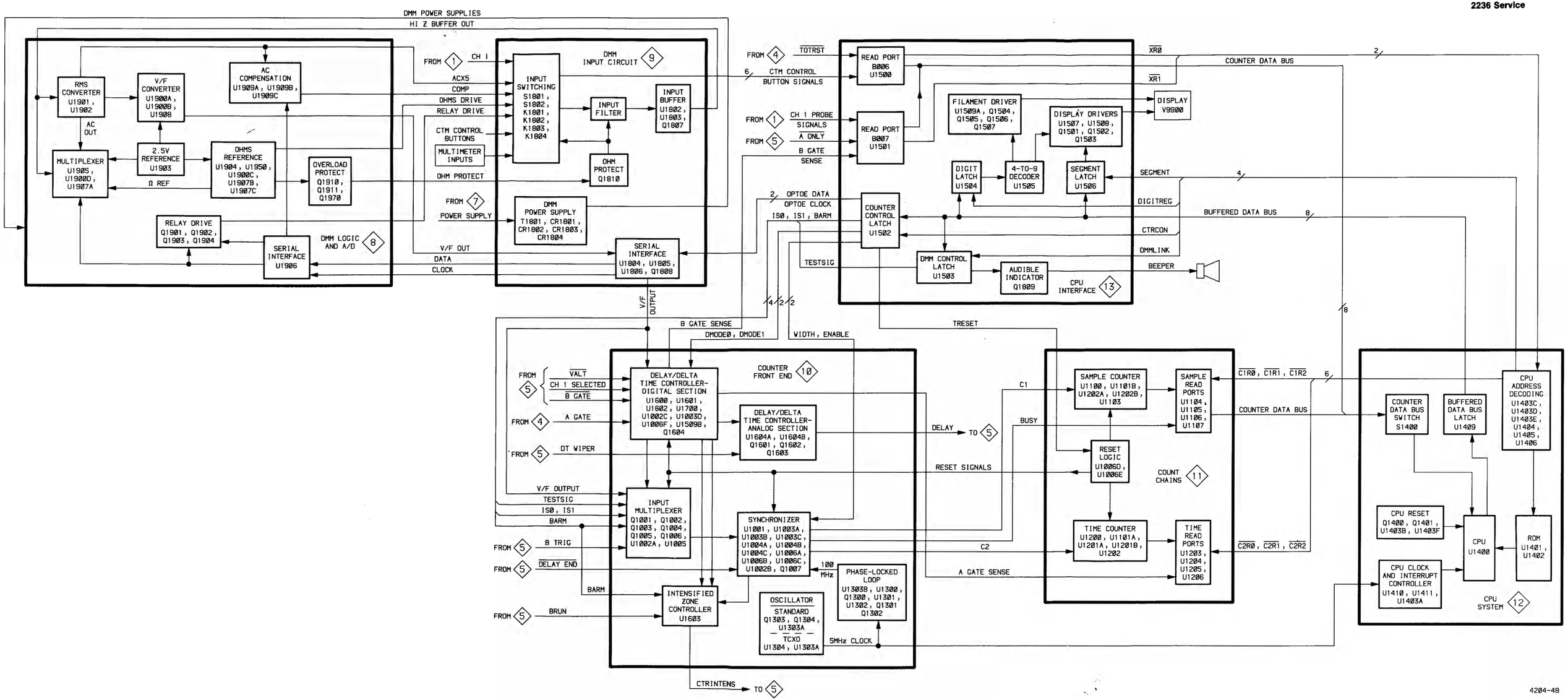

Figure 9-7. CTM detailed block diagram.

TEST WAVEFORM AND VOLTAGE SETUPS

WAVEFORM MEASUREMENTS

On the left-hand pages preceding the schematic diagrams are test waveform illustrations that are intended to aid in troubleshooting the instrument. To test the instrument for these waveforms, make the initial control settings as follows:

Vertical (Both Channels)

POSITION	Midrange
VERTICAL MODE	CH 1
BW LIMIT	Off (button out)
VOLTS/DIV	10 mV
VOLTS/DIV Variable	CAL detent
INVERT	Off (button out)
Input Coupling	GND

Horizontal

POSITION	Midrange
HORIZONTAL MODE	A
A and B SEC/DIV	0.5 ms
SEC/DIV Variable	CAL detent
X10 Magnifier	Off (knob in)
B DELAY TIME POSITION	5.0

B TRIGGER

LEVEL	Fully clockwise
SLOPE	OUT

A TRIGGER

VAR HOLDOFF	Minimum (fully ccw)
Mode	P-P AUTO
LEVEL	Midrange
A&B INT	VERT MODE
A SOURCE	INT

CTM

Δ TIME POSITION	Midrange
Function Select	All buttons out

Changes to the control settings for specific waveforms are noted at the beginning of each set of waveforms. Input signals and hookups required are also indicated, if needed, for each set of waveforms.

DC VOLTAGE MEASUREMENTS

Typical voltage measurements, located on the schematic diagram, were obtained with the instrument operating under the conditions specified in the Waveforms Measurements setup. Control-setting changes required for specific voltages are indicated on each waveforms page. Measurements are referenced to chassis ground with the exception of the Preregulator and Inverter voltages on Diagram 7. These voltages are referenced as indicated on the schematic diagram.

RECOMMENDED TEST EQUIPMENT

Test equipment in Table 4-1 in the "Performance Check Procedure", Section 4, of this manual, meets the required specifications for testing this instrument.

POWER SUPPLY ISOLATION PROCEDURE

Each regulated supply has numerous feed points to external loads throughout the instrument. The power distribution diagram is used in conjunction with the schematic diagrams to determine those loads that can be isolated by removing service jumpers and those that cannot.

The power distribution and circuit board interconnections diagrams are divided into circuit boards. Each power supply feed to a circuit board is indicated by the schematic diagram number on which the voltage appears. The schematic diagram grid location of a service jumper or component is given adjacent to the component number on the power distribution and circuit board interconnect diagrams.

If a power supply comes up after lifting one of the main jumpers from the power supply to isolate that supply, it is very probable that a short exists in the circuitry on that supply line. By lifting jumpers farther down the line, the circuit in which a short exists may be located.

Always set the POWER switch to OFF before soldering or unsoldering service jumpers or other components and before attempting to measure component resistance values.

CHASSIS MOUNTED PARTS

CIRCUIT NUMBER	SCHEM NUMBER	SCHEM LOCATION	CIRCUIT NUMBER	SCHEM NUMBER	SCHEM LOCATION
B9965	7	9N	P9870-10	7	4P
			P9870-12	7	3N
C9001	1	3A	P9870-14	7	8P
C9272	2	8S	P9870-1	7	8P
C9273	2	2S	P9870-2	7	8N
			P9870-3	7	7N
DL9210	2	5K	P9870-4	7	7N
			P9870-5	7	6P
DS9150	7	8A	P9870-7	7	5P
			P9870-8	7	7P
F9001	7	5A			
			Q9070	7	8J
FL9001	7	5A			
			R9100	1	3A
J9100	1	3A	R9272	2	8S
J9376	3	5A	R9273	2	2S
J9510	1	7A	R9376	3	5A
J9800	7	4A	R9510	1	7A
J9900	6	2E	R9521	4	3A
			R9644	5	5D
P9272	7	5P	R9802A	7	2A
P9273	7	5P	R9802B	7	3A
P9778	7	4P			
P9788	7	4P	V9870	7	2P
P9070-1	7	8J			
P9070-2	7	8J	W9272	2	8S
P9070-3	7	8J	W9273	2	2S

W9000 (A3 TO A1)					
WIRE NO.	LINE NAME	DIAG NO. & GRID COORDINATES	WIRE NO.	LINE NAME	DIAG NO. & GRID COORDINATES
1	BEAM FIND	7,4F	21	HORIZ POS	6,3B
2	CH 1 POS CW	2,2D	22	+AUTO LEVEL CW	3,8L
3	CH 1 POS CCW	2,3D	23	-AUTO LEVEL CCW	3,9L
4	A/B SWP SEP	2,2L	24	$\overline{\text{P-P}}$	4,8C
5	+8.6 V_G	14,4P	25	SS RESET	4,5B
6	TRIG VIEW	2,6B	26	$\overline{\text{B ONLY}}$	5,2D
7	CH 2 POS CW	2,8D	27	HALT	5,2D
8	CH 2 POS CCW	2,9D	28	B SLOPE	5,9E
9	$\overline{\text{CH 2}}$	2,6B	29	TRIG'D LED	4,9K
10	BW LIMIT	2,4K	30	$\overline{\text{SS}}$	4,9B
11	$\overline{\text{CHOP ENABLE}}$	3,4C	31	GND	3,6C
12	-8.6 V_H	14,4P	32	$\overline{\text{CH 1 T}}$	3,2C
13	$\overline{\text{VALT}}$	5,2D	33	$\overline{\text{CH 2 T}}$	3,3C
14	$\overline{\text{CH 1}}$	2,5B	34	$\overline{\text{V MODE T}}$	3,3C
15	$\overline{\text{A ONLY}}$	5,1D	35	$\overline{\text{EXT}}$	3,7C
16	B LEVEL	5,9E	36	$\overline{\text{LINE}}$	3,6C
17	TV TRIG ENABLE	4,9B	37	$\overline{\text{INT}}$	3,7C
18	$\overline{\text{XY}}$	3,2C	38	GND	3,6C
19	A SLOPE	3,8N	39	EXT INPUT	3,5C
20	A TRIGGER LEVEL	3,8 M			

W9001 (A1 TO A3)					
WIRE NO.	LINE NAME	DIAG NO. & GRID COORDINATES	WIRE NO.	LINE NAME	DIAG NO. & GRID COORDINATES
1	BEAM FIND	7,4F	21	HORIZ POS	6,3B
2	CH 1 POS CW	2,2D	22	+AUTO LEVEL CW	3,8M
3	CH 1 POS CCW	2,3D	23	-AUTO LEVEL CCW	3,8M
4	A/B SWP SEP	2,2L	24	$\overline{\text{P-P}}$	4,8B
5	+8.6 V_G	14,4P	25	SS RESET	4,5B
6	TRIG VIEW	2,7B	26	$\overline{\text{B ONLY}}$	5,2E
7	CH2 POS CW	2,8D	27	HALT	5,2E
8	CH 2 POS CCW	2,9D	28	B SLOPE	5,8F
9	$\overline{\text{CH 2}}$	2,6B	29	TRIG'D LED	4,9K
10	BW LIMIT	2,4K	30	$\overline{\text{SS}}$	4,9B
11	$\overline{\text{CHOP ENABLE}}$	3,4C	31	GND	3,6C
12	-8.6 V_H	14,4P	32	$\overline{\text{CH 1T}}$	3,2C
13	$\overline{\text{VALT}}$	5,2E	33	$\overline{\text{CH 2 T}}$	3,3C
14	$\overline{\text{CH 1}}$	2,5B	34	$\overline{\text{V MODE T}}$	3,3C
15	$\overline{\text{A ONLY}}$	5,1E	35	$\overline{\text{EXT}}$	3,7C
16	B LEVEL	5,9E	36	$\overline{\text{LINE}}$	3,6C
17	TV TRIG ENABLE	4,9B	37	$\overline{\text{INT}}$	3,7C
18	$\overline{\text{XY}}$	3,2C	38	GND	3,6C
19	A SLOPE	3,8N	39	EXT INPUT	3,5C
20	A TRIGGER LEVEL	3,8M			

W9400 (A1 TO A5)					
WIRE NO.	LINE NAME	DIAG NO. & GRID COORDINATES	WIRE NO.	LINE NAME	DIAG NO. & GRID COORDINATES
1	B SIGNAL	5,9F	15	GND	14,6P
2	B SLOPE	5,9F	16	GND	14,6P
3	GND	14,5P	17	B RETRACE	5,7F
4	B LEVEL	5,9F	18	GND	14,6P
5	A DISP	5,1S	19	$\overline{\text{VALT}}$	5,2F
6	$\overline{\text{B ONLY}}$	5,2F	20	A SWP	5,5F
7	$\overline{\text{SEP}}$	5,2S	21	ALT SYNC	5,1F
8	B INTENSITY LEVEL	7,3C	22	B SWP	5,6F
9	Z DRIVE	7,3E	23	GND	14,6P
10	HALT	5,2F	24	GND	14,7P
11	B DISP	5,2S	25	-8.6 VA	14,7P
12	CH1 SELECTED	5,2F	26	+5.0 VA	14,5P
13	$\overline{\text{A ONLY}}$	5,1F	27	+8.6 VA	14,5P
14	DELAY	5,5F			

W9401 (A5 TO A1)					
WIRE NO.	LINE NAME	DIAG NO. & GRID COORDINATES	WIRE NO.	LINE NAME	DIAG NO. & GRID COORDINATES
1	B SIGNAL	5,9G	15	GND	5,4G
2	B SLOPE	5,9G	16	GND	5,4G
3	GND	5,4G	17	B RETRACE	5,7G
4	B LEVEL	5,9G	18	GND	5,4G
5	A DISP	5,1S	19	$\overline{\text{VALT}}$	5,2G
6	$\overline{\text{B ONLY}}$	5,2G	20	A SWP	5,5G
7	$\overline{\text{SEP}}$	5,2S	21	ALT SYNC	5,1G
8	B INTENSITY LEVEL	5,4P	22	B SWP	5,6G
9	Z DRIVE	5,5S	23	GND	5,4G
10	HALT	5,2G	24	GND	5,4G
11	B DISP	5,2S	25	-8.6 VA	5,4G
12	CH 1 SELECTED	5,2G	26	+5.0 VA	5,3G
13	$\overline{\text{A ONLY}}$	5,1G	27	+8.6 VA	5,3G
14	DELAY	5,5G			

P9700 (A4 TO A1)		
PIN NO.	LINE NAME	DIAG NO. & GRID COORDINATES
1	A DISP	6,5E
2	B DISP	6,5E
3	B DISP	5,6E
4	H.O. 2	4,4D
5	H.0. 1	4,4D
6	H.0. COM	4,4D
7	A SWP	4,8 N
9	GND	5,7E
10	B RETRACE	5,7E
8	$\overline{\text{A GATE}}$	4,7N

W9700 (A1 TO A4)		
WIRE NO.	LINE NAME	DIAG NO. & GRID COORDINATES
1	A DISP	6,5D
2	B DISP	6,5D
3	B SWP	5,6F
4	H.0. 2	4,4D
5	H.0. 1	4,4D
6	H.0. COM	4,4D
7	A SWP	4,8M
9	GND	14,2P
10	B RETRACE	5,6F
8	$\overline{\text{A GATE}}$	4,7M

P9705 (A4 TO A1)		
PIN NO.	LINE NAME	DIAG NO & GRID COORDINATES
1	GND	6,0E
2	+SWP	6,5K
3	-SWP	6,7K
4	GND	6,9E
5	X AXIS SIG	6,4E
6	-8.6 V_C	6,9E
7	+8.6 V_B	6,8E
8	+30 V_B	6,8E

W9705 (A1 TO A4)		
WIRE NO.	LINE NAME	DIAG NO. & GRID COORDINATES
1	GND	14,3P
2	+SWP	6,5L
3	-SWP	6,7L
4	GND	14,3P
5	X AXIS SIG	6,4E
6	-8.6 V_C	14,3P
7	+8.6 V_B	14,3P
8	+30 V_B	14,2P

J2000/P2000 (A13 TO A10)		
PIN NO.	LINE NAME	DIAG NO. & GRID COORDINATES
1	G5	13,3N
2	G6	13,3N
3	G7	13,3M
4	G8	13,3M
5	G9	13,3M
6	Pdp	13,3M
7	Pe	13,3M
8	Pg	13,3L
9	Pf	13,3L
10	F1	13,3L

W2000 (A10 TO A13)		
WIRE NO.	LINE NAME	DIAG NO. & GRID COORDINATES
1	G5	13,3N
2	G6	13,3N
3	G7	13,3M
4	G8	13,3M
5	G9	13,3M
6	Pdp	13,3M
7	Pe	13,3M
8	Pg	13,3L
9	Pf	13,3L
10	F1	13,3L

J2050/P2050 (A13 TO A10)		
PIN NO.	LINE NAME	DIAG NO. & GRID COORDINATES
1	F2	13,3S
2	Pa	13,3S
3	Pb	13,3S
4	Pc	13,3P
5	Pd	13,3P
6	G1	13,3P
7	G2	13,3P
8	G3	13,3P
9	G4	13,3N

W2050 (A10 TO A13)		
WIRE NO.	LINE NAME	DIAG NO. & GRID COORDINATES
1	F2	13,3S
2	Pa	13,3S
3	Pb	13,3S
4	Pc	13,3P
5	Pd	13,3P
6	G1	13,3P
7	G2	13,3P
8	G3	13,3P
9	G4	13,3N

P2100 (A5 TO A10)		
PIN NO.	LINE NAME	DIAG NO. & GRID COORDINATES
1	GND	5,7S
2	B TRIG	5,7S
3	GND	5,6S
4	$\overline{\text{DELAY END}}$	5,6S

W2100 (A10 TO A5)		
WIRE NO.	LINE NAME	DIAG NO. & GRID COORDINATES
1	GND	10,6A
2	B TRIG	10,6A
3	GND	10,8A
4	$\overline{\text{DELAY END}}$	10,7A

J2000/P2000 (A13 TO A10)		
PIN NO.	LINE NAME	DIAG NO. & GRID COORDINATES
1	G5	13,3N
2	G6	13,3N
3	G7	13,3M
4	G8	13,3M
5	G9	13,3M
6	Pdp	13,3M
7	Pe	13,3M
8	Pg	13,3L
9	Pf	13,3L
10	F1	13,3L

W2000 (A10 TO A13)		
WIRE NO.	LINE NAME	DIAG NO. & GRID COORDINATES
1	G5	13,3N
2	G6	13,3N
3	G7	13,3M
4	G8	13,3M
5	G9	13,3M
6	Pdp	13,3M
7	Pe	13,3M
8	Pg	13,3L
9	Pf	13,3L
10	F1	13,3L

J2050/P2050 (A13 TO A10)		
PIN NO.	LINE NAME	DIAG NO. & GRID COORDINATES
1	F2	13,3S
2	Pa	13,3S
3	Pb	13,3S
4	Pc	13,3P
5	Pd	13,3P
6	G1	13,3P
7	G2	13,3P
8	G3	13,3P
9	G4	13,3N

W2050 (A10 TO A13)		
WIRE NO.	LINE NAME	DIAG NO. & GRID COORDINATES
1	F2	13,3S
2	Pa	13,3S
3	Pb	13,3S
4	Pc	13,3P
5	Pd	13,3P
6	G1	13,3P
7	G2	13,3P
8	G3	13,3P
9	G4	13,3N

P2100 (A5 TO A10)		
PIN NO.	LINE NAME	DIAG NO. & GRID COORDINATES
1	GND	5,7S
2	B TRIG	5,7S
3	GND	5,6S
4	$\overline{\text{DELAY END}}$	5,6S

W2100 (A10 TO A5)		
WIRE NO.	LINE NAME	DIAG NO. & GRID COORDINATES
1	GND	10,6A
2	B TRIG	10,6A
3	GND	10,8A
4	$\overline{\text{DELAY END}}$	10,7A

P2200 (A5 TO A10)		
PIN NO.	LINE NAME	DIAG NO. & GRID COORDINATES
1	B RUN AFTER DELAY	5,9S
2	GND	5,9S
3	$\overline{\text{B GATE}}$	5,5S
4	GND	5,9S
5	CTR INTENS	5,4M
6	CH 1 SEL	5,2M

W2200 (A10 TO A5)		
WIRE NO.	LINE NAME	DIAG NO. & GRID COORDINATES
1	B RUN AFTER DELAY	10,9A
2	GND	10,9A
3	$\overline{\text{B GATE}}$	10,4A
4	GND	10,9A
5	CTR INTENS	10,7S
6	CH 1 SEL	10,2A

P2300 (A1 TO A10)		
PIN NO.	LINE NAME	DIAG NO. & GRID COORDINATES
1	$\overline{\text{VALT}}$	5,2E
2	$\overline{\text{A ONLY}}$	5,1E
3	GND A	5,5E
4	DELAY	5,5E
5	DT WIPER	5,5E

W2300 (A10 TO A1)		
WIRE NO.	LINE NAME	DIAG NO. & GRID COORDINATES
1	$\overline{\text{VALT}}$	10,1A
2	$\overline{\text{A ONLY}}$	13,6A
3	GND A	10,3S
4	DELAY	10,2S
5	DT WIPER	10,3A

P2400 (A1 TO A10)		
PIN NO.	LINE NAME	DIAG NO. & GRID COORDINATES
1	GND	14,6C
2	+30 V_C	14,3C
3	−8.6 V_A	14,7C
4	+8.6 V_A	14,4C
5	+5,2 V_A	14,5C

W2400 (A10 TO A1)		
WIRE NO.	LINE NAME	DIAG NO. & GRID COORDINATES
1	GND	14,6B
2	+30 V_C	14,3B
3	−8.6 V_A	14,7B
4	+8.6 V_A	14,4B
5	+5.2 V_A	14,5B

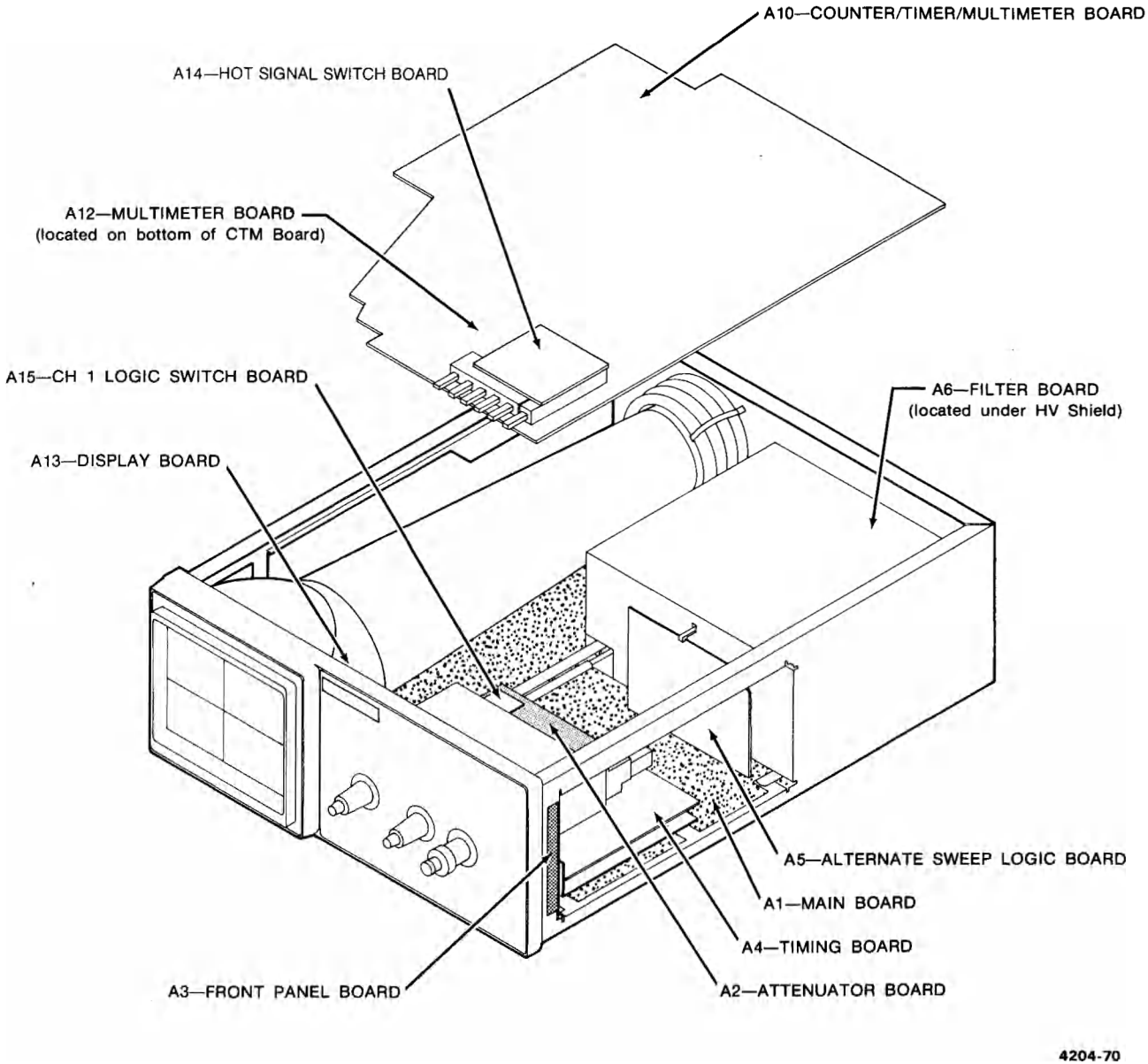

Figure 9-8. Circuit board location illustration.

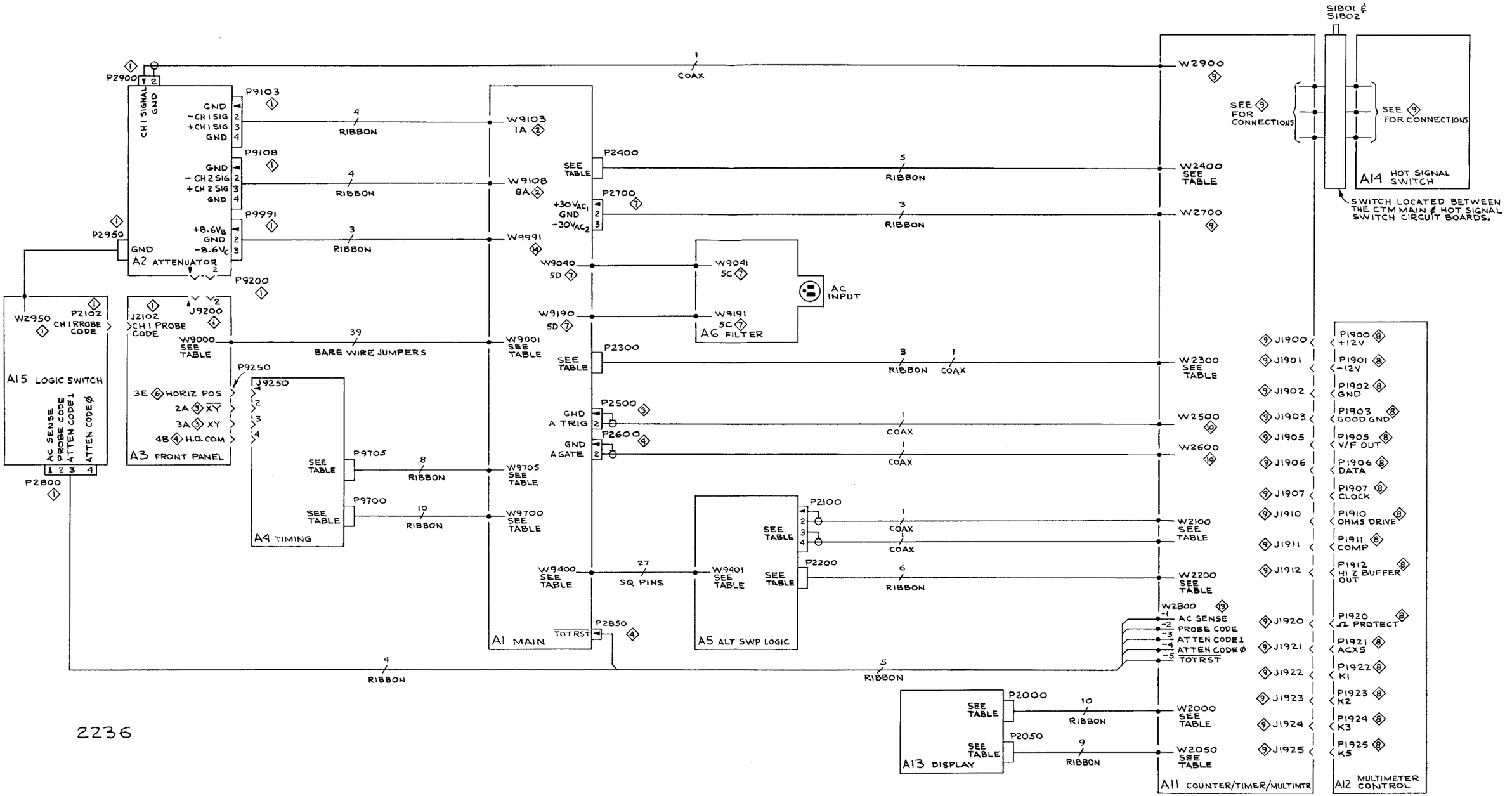

4204-21

CIRCUIT BOARD INTERCONNECTIONS

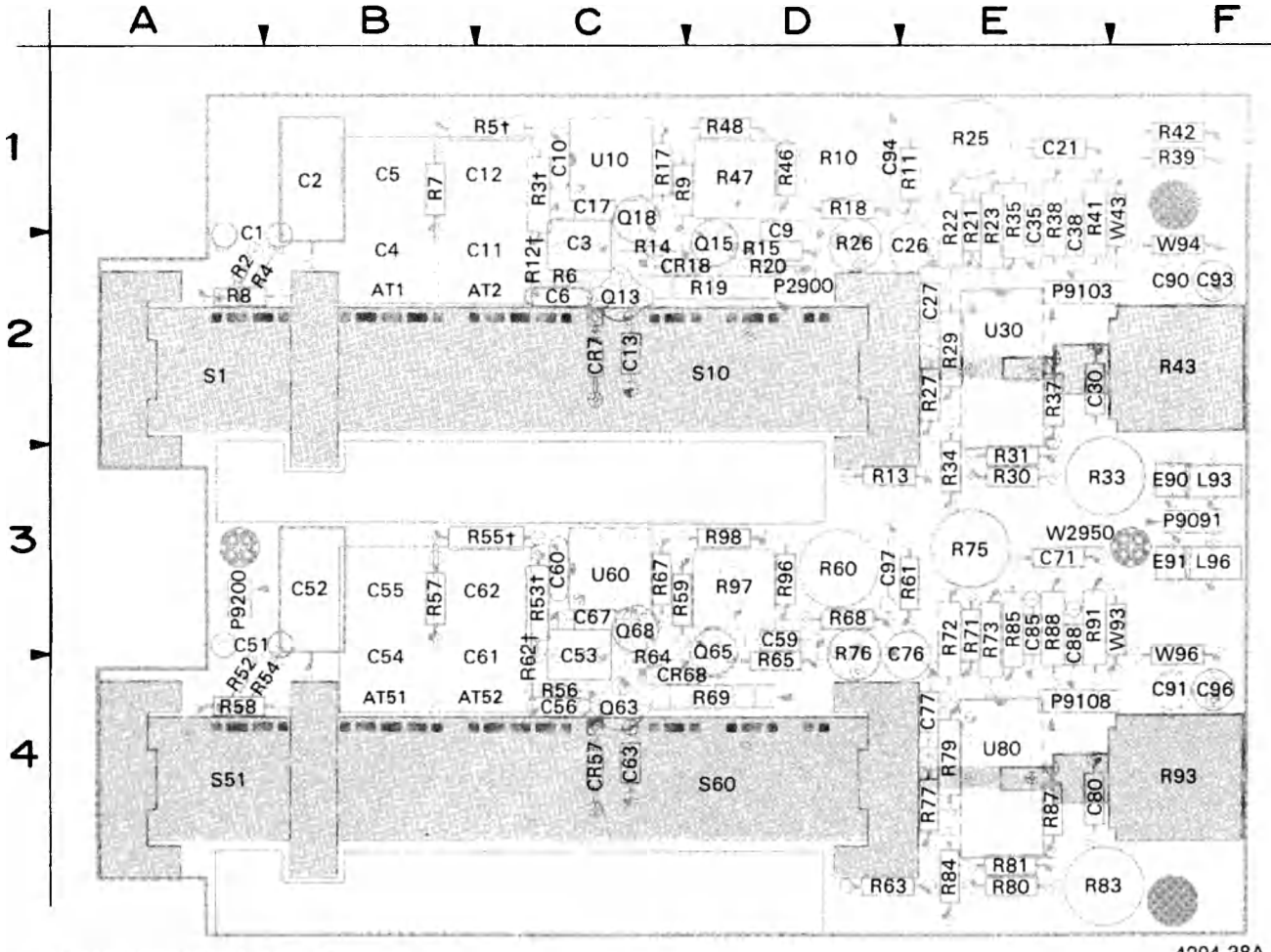

4204-38A

†These components are located on the reverse side of the board.

Figure 9-9. A2—Attenuator board.

All components on the A2—Attenuator board are located on Diagram 1.

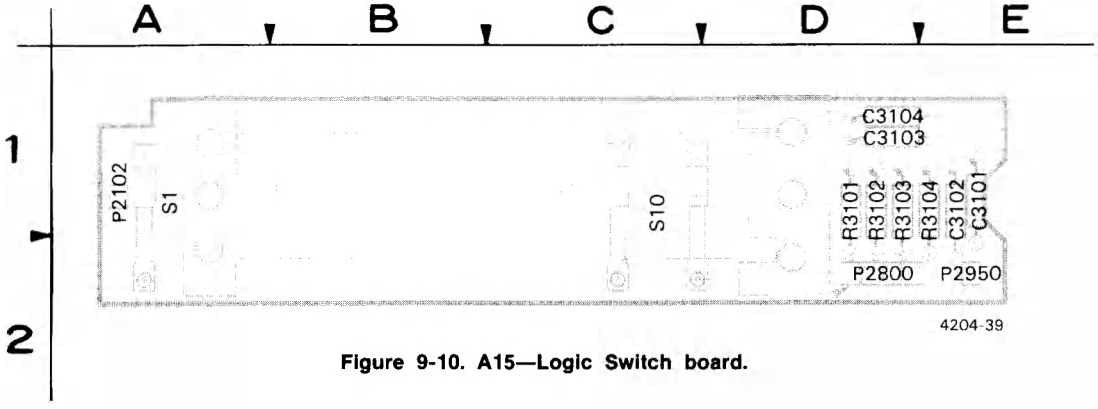

Figure 9-10. A15—Logic Switch board.

All components on the A15—Logic Switch board are located on Diagram 1.

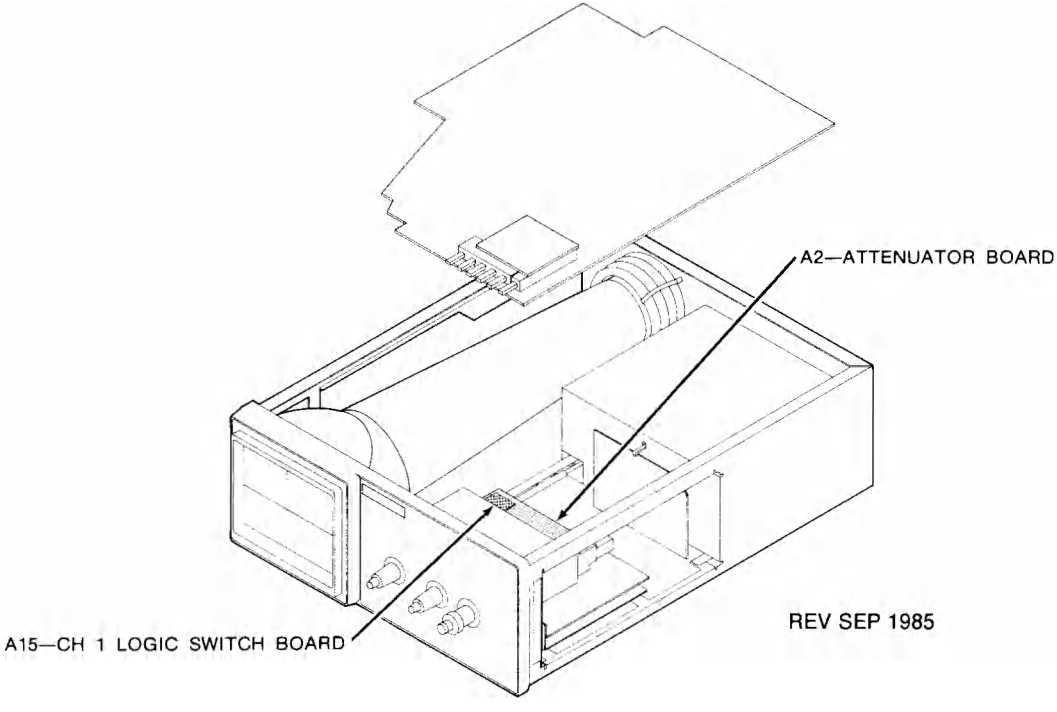

CH 1, CH 2 ATTENUATORS & LOGIC SWITCH

1

ASSEMBLY A2

CIRCUIT NUMBER	SCHEM LOCATION	BOARD LOCATION	CIRCUIT NUMBER	SCHEM LOCATION	BOARD LOCATION	CIRCUIT NUMBER	SCHEM LOCATION	BOARD LOCATION	CIRCUIT NUMBER	SCHEM LOCATION	BOARD LOCATION
AT1	3D	2B	C93	9B	2F	R6	3F	2C	R61	7G	3E
AT2	3E	2C	C94	4H	1D	R7	4D	1B	R62*	7E	4D
AT51	7D	4B	C96	9B	4F	R8	3C	2A	R63	6G	4D
AT52	7E	4C	C97	8H	3D	R9	4G	1C	R64	7H	4C
						R10	4G	1D	R65	7H	4D
C1	3C	1A	CR7	3G	2C	R11	4G	1E	R66*	8G	
C2	3C	1B	CR18	3H	2C	R12*	4E	2C	R67	6H	3C
C3	3G	2C	CR57	6G	4C	R13	3G	3D	R68	7H	3D
C4	3D	2B	CR28	7H	4C	R14	3H	2C	R69	7J	4D
C5	3D	1B	E90*	8B	3F	R15	4G	2D	R71	8L	3E
C6	3F	2C	E91*	8B	3F	R16*	4G		R72	8L	3E
C7*	3G					R17	3H	1C	R73	7L	3E
C9	4G	2D	L90*	8B		R18	2H	1D	R75	8L	3E
C10	4G	1C	L91*	8B		R19	3J	2D	R76	8M	3D
C11	3E	2C	L93	9B	3F	R20	3H	2D	R77	7M	4E
C12	3E	1C				R21	4L	1E	R79	8M	4E
C13	2H	2C	P2900-1	3S	2D	R22	4L	1E	R80	8M	4E
C17	3H	1C	P2900-2	3S	2D	R23	4L	1E	R81	8M	4E
C21	4L	1E	P9103-1	4S	2F	R25	4L	1E	R83	8L	4E
C26	4M	2E	P9103-2	3S	2F	R26	4M	2D	R84	9M	4E
C27	4M	2E	P9103-3	5S	2F	R27	4M	2E	R85	9N	3E
C30	5M	2E	P9103-4	4S	2F	R29	4M	2E	R87	9N	4E
C35	6N	1E	P9108-1	8S	4E	R30	5M	3E	R88	9N	3E
C38	5P	1E	P9108-2	7S	4E	R31	5M	3E	R91	9M	3E
C51	7C	3A	P9108-3	8S	4E	R33	5L	3E	R93	9M	4F
C52	7C	3B	P9108-4	8S	4E	R34	5M	3E	R96	8H	3D
C53	7F	3C	P9200-1	9L	3A	R35	6N	1E	R97	8H	3D
C54	7D	4B	P9200-2	9L	3A	R37	5N	2E	R98	8H	3D
C55	7D	3B	P9991-1	8B	3F	R38	5P	1E			
C56	6G	4C	P9991-2	9B	3F	R39	5P	1F	S1	5B	2A
C57*	7G		P9991-3	9B	3F	R41	5P	1E	S10	5H	2D
C59	8G	3D				R42	6P	1F	S51	6B	4A
C60	8G	3C	Q13	3H	2C	R43	6P	2F	S60	5H	4D
C61	7E	4C	Q15	4H	2D	R46	4H	1D			
C62	7E	3C	Q18	3H	1C	R47	5H	1D	U10	4F	1C
C63	6H	4C	Q63	7H	4C	R48	5H	1D	U30	3N	2E
C67	6H	3C	Q65	8G	3D	R52	7B	4A	U60	7F	3C
C71	8L	3E	Q68	7H	3C	R53	7F	3C	U80	7N	4E
C76	8M	3E				R54	7C	4A	VR10*	9G	
C77	8M	4E	R2	3B	2A	R55	8F	3C	VR60*	9H	
C80	8M	4E	R3	3F	1C	R56	7G	4C			
C85	9N	3E	R4	3B	2A	R57	7D	3B	W43	6P	1F
C88	9P	3E	R5	4F	1C	R58	7C	4A	W93	9M	3F
C90	8B	2F				R59	7G	3C	W94	9C	2F
C91	8B	4F				R60	8G	3D	W96	9C	4F
									W2950	2B	3E

ASSEMBLY A3

CIRCUIT NUMBER	SCHEM LOCATION	BOARD LOCATION	CIRCUIT NUMBER	SCHEM LOCATION	BOARD LOCATION	CIRCUIT NUMBER	SCHEM LOCATION	BOARD LOCATION	CIRCUIT NUMBER	SCHEM LOCATION	BOARD LOCATION
J2102	1B	2B	R89	9K	2C	S90	9K	2C			
J9200-1	9L	3C	R92	9K	2C						
J9200-2	9L	3C				W9100	2A	4B			

Partial A3 also shown on diagrams 2, 3, 4, 5, 6, 7 and 14.

ASSEMBLY A15

CIRCUIT NUMBER	SCHEM LOCATION	BOARD LOCATION	CIRCUIT NUMBER	SCHEM LOCATION	BOARD LOCATION	CIRCUIT NUMBER	SCHEM LOCATION	BOARD LOCATION	CIRCUIT NUMBER	SCHEM LOCATION	BOARD LOCATION
C3101	1N	1E	P2102	1B	1A	P2800-3	2P	2D	R3102	1N	1D
C3102	1N	1E	P2950	2C	2E	P2800-4	2P	2D	R3103	2N	1D
C3103	2N	1D	P2800-1	1P	2D				R3104	2N	1E
C3104	2N	1D	P2800-2	1P	2D	R3101	1N	1D			

CHASSIS MOUNTED PARTS

CIRCUIT NUMBER	SCHEM LOCATION	BOARD LOCATION	CIRCUIT NUMBER	SCHEM LOCATION	BOARD LOCATION	CIRCUIT NUMBER	SCHEM LOCATION	BOARD LOCATION	CIRCUIT NUMBER	SCHEM LOCATION	BOARD LOCATION
C9001	3A	CHASSIS	J9100	3A	CHASSIS	R9100	3A	CHASSIS			
			J9510	7A	CHASSIS	R9510	7A	CHASSIS			

***See Parts List for serial number ranges.**

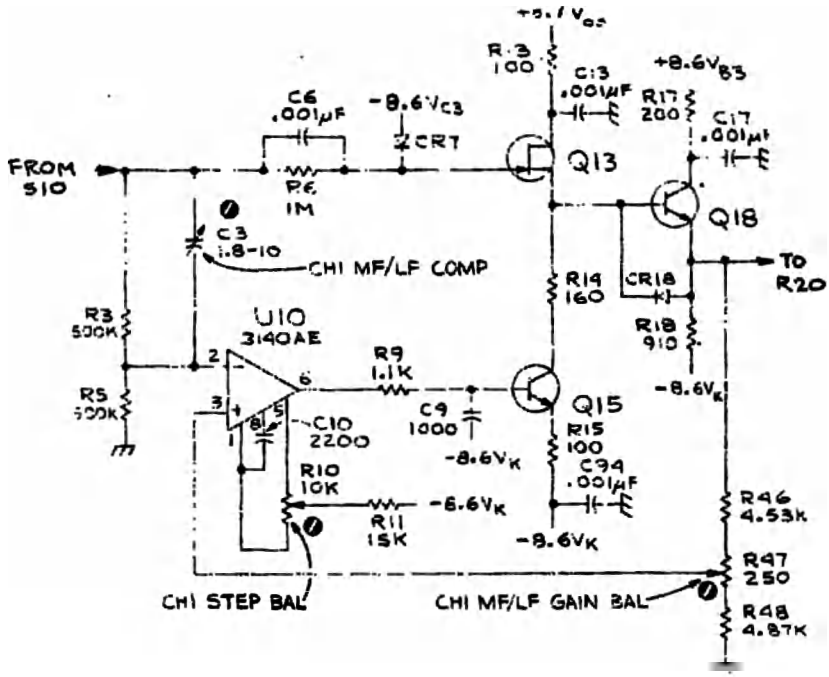

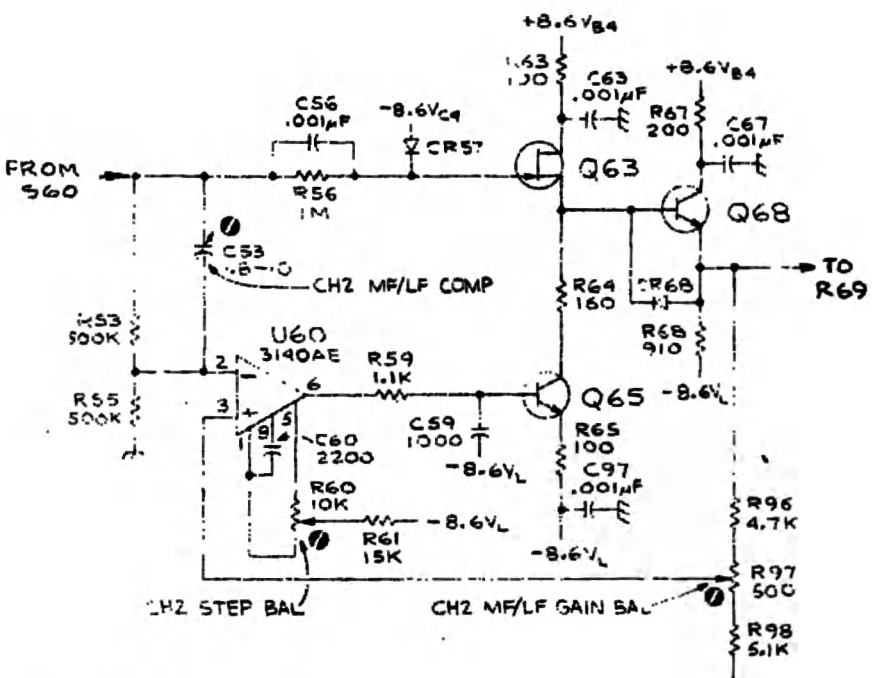

EFF: SN B018643 & BELOW.

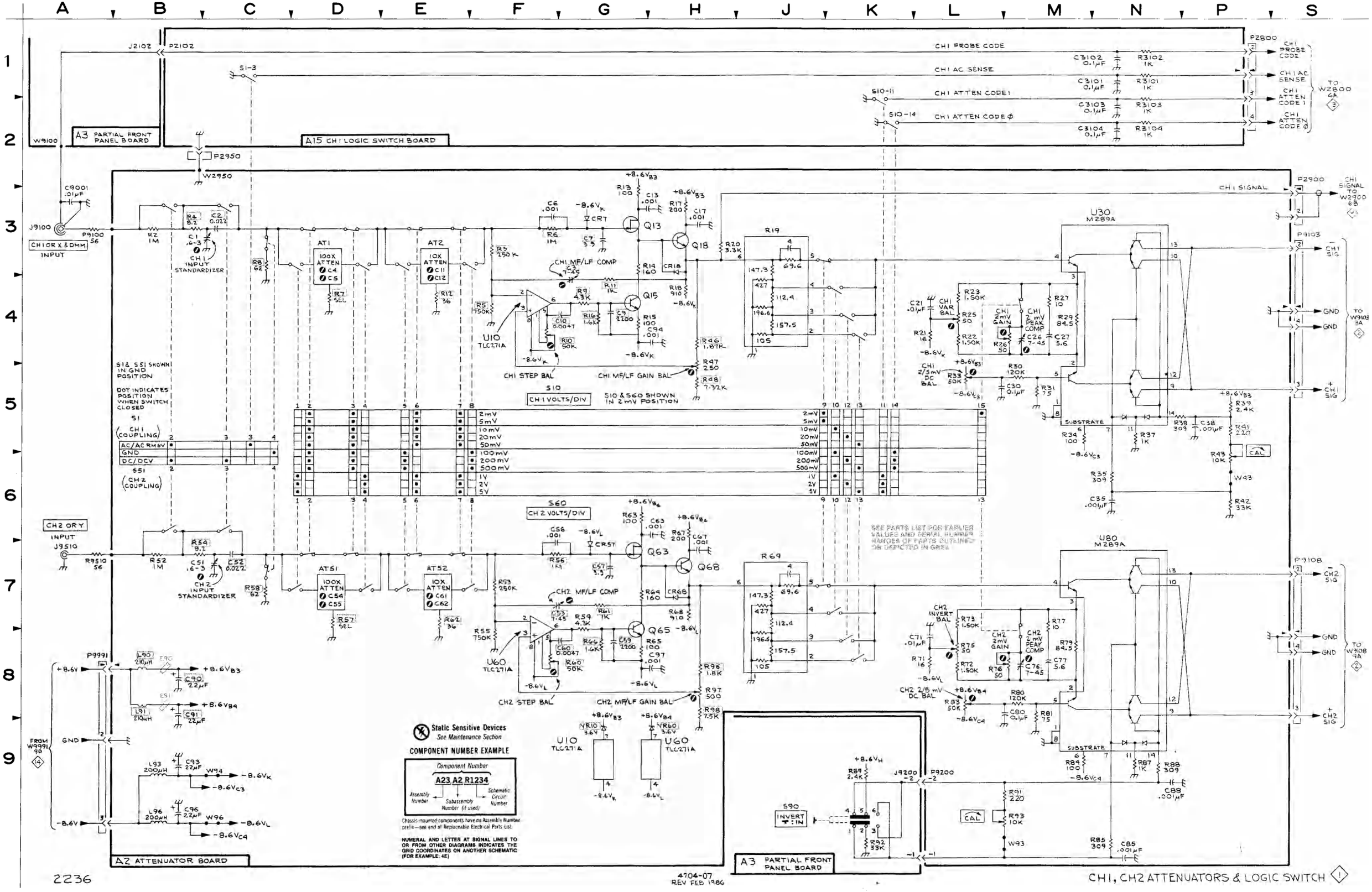

4704-07
REV FEB 1986

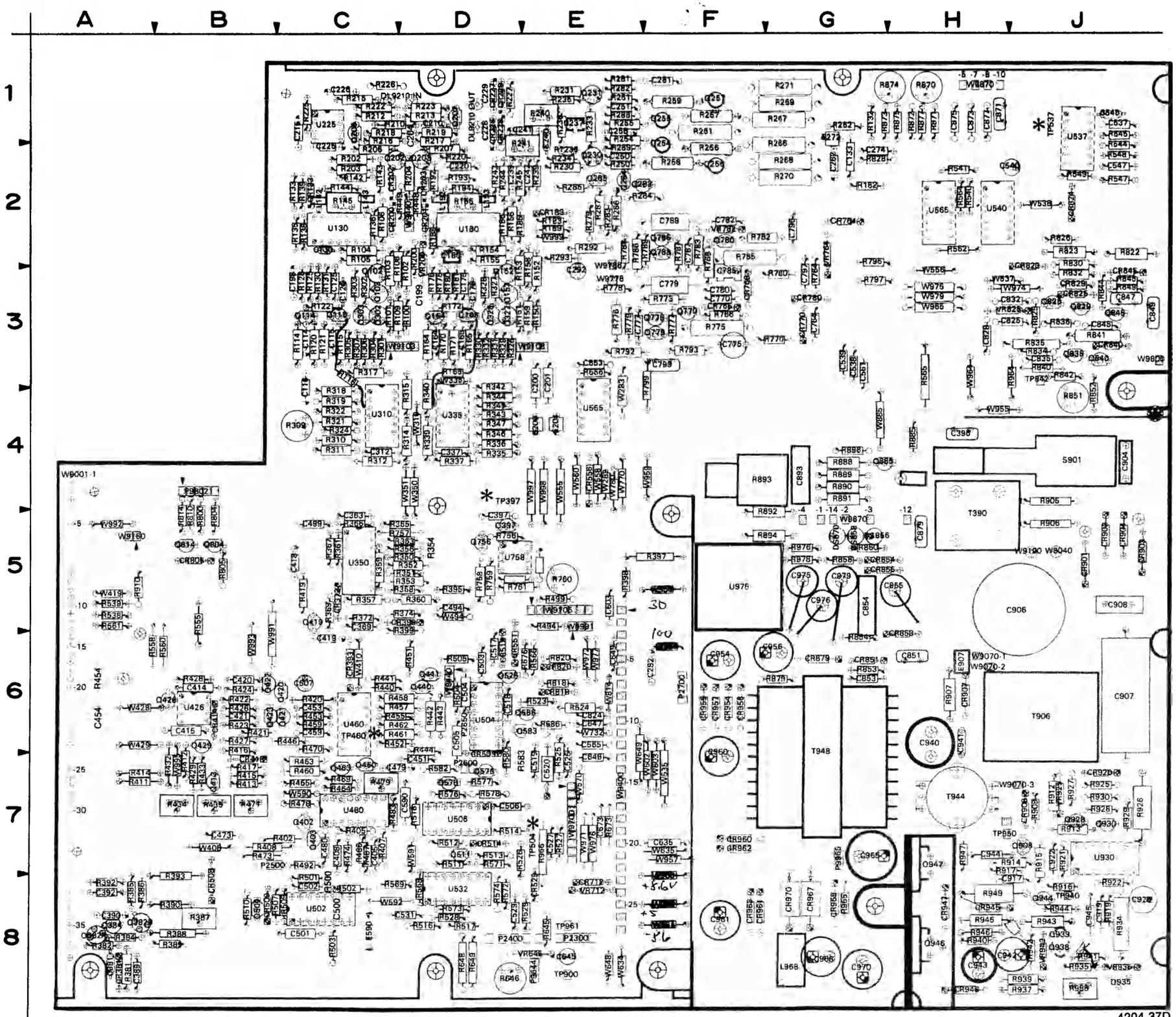

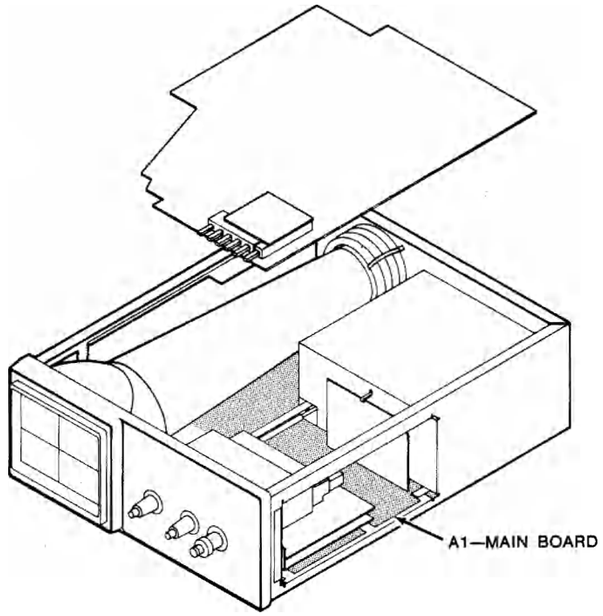

*These components are located on the reverse side of the circuit board.

Figure 9-11. A1—Main board.

REV AUG 1985

4204-37D

Static Sensitive Devices
See Maintenance Section

COMPONENT NUMBER EXAMPLE

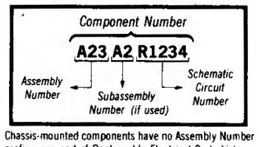

Chassis-mounted components have no Assembly Number prefix—see end of Replaceable Electrical Parts List.

A1—MAIN BOARD

CIRCUIT NUMBER	SCHEM NUMBER
C114	2
C115	2
C116	2
C125	2
C126	2
C130	2
C133	2
C164	2
C165	2
C175	2
C176	2
C180	2
C198	2
C199	2
C200	2
C201	14
C204	2
C210	2
C215	2
C220	14
C225	2
C226	2
C228	2
C229	2
C237	2
C239	2
C240	2
C241	2
C242	2
C250	2
C251	2
C255	2
C262	2
C274	14
C281	2
C282	2
C292	2
C312	3
C337	3
C363	3
C369	3
C381	3
C389	3
C390	3
C392	3
C396	7
C397	3
C405	3
C408	3
C414	3
C415	3
C418	3
C419	3
C420	3
C421	3
C451	14
C453	3
C454	3
C459	3
C473	3
C479	3
C480	3
C494	14
C499	14
C500	4
C501	4
C502	4
C503	4
C504	4
C505	4
C506	4
C507	14
C517	4
C518	4
C519	4
C520	4
C525	4
C527	4
C529	4
C531	4
C537	2
C538	2
C539	2
C540	2
C545	2
C547	2
C553	3
C561	3
C565	3
C590	14
C603	5
C635	5
C647	5
C648	5
C649	5
C673	5
C764	6
C770	6
C775	6
C777	6
C779	6
C780	6
C782	6
C785	6
C787	6
C789	6
C796	14
C797	14
C799	14
C824	7
C825	7
C828	7
C832	7
C835	7
C845	7
C847	7
C849	7
C851	7
C853	7
C854	7
C855	7
C871	7
C873	7
C875	7
C877	7
C879	7
C893	7
C904	7
C906	7
C907	7
C908	7
C917	7
C919	7
C922	7
C925	7
C940	7
C941	7
C942	7
C943	7
C944	7
C945	7
C954	7
C956	7
C960	7
C961	7
C965	7
C968	7
C970	7
C975	7
C976	7
C979	7
CR133	2
CR183	2
CR200	2
CR201	2
CR202	2
CR203	2
CR226	2
CR227	2
CR228	2
CR229	2
CR372	3
CR381	3
CR393	3
CR399	3
CR414	3
CR415	3
CR503	4
CR508	4
CR509	4
CR514	4
CR518	4
CR529	4
CR551	7
CR556	3
CR712	5
CR764	6
CR765	6
CR768	6
CR770	6
CR780	6
CR805	7
CR818	7
CR820	7
CR823	7
CR824	7
CR825	7
CR829	7
CR840	7
CR845	7
CR851	7
CR853	7
CR854	7
CR855	7
CR879	7
CR901	7
CR902	7
CR903	7
CR904	7
CR907	7
CR908	7
CR920	7
CR945	7
CR946	7
CR947	7
CR954	7
CR955	7
CR956	7
CR957	7
CR960	7
CR961	7
CR962	7
CR963	7
CR965	7
CR967	7
CR970	7
DS856	7
DS858	7
DS870	7
E200	14
E201	14
E272	14
E590	14
E907	7
L142	2
L143	2
L192	2
L193	2
L968	7
P2300-1	5
P2300-2	5
P2300-3	5
P2300-4	5
P2300-5	5
P2400-1	14
P2400-2	14
P2400-3	14
P2400-4	14
P2400-5	14
P2500-1	3
P2500-2	3
P2600-1	4
P2600-2	4
P2700-1	7
P2700-2	7
P2700-3	7
P2850-1	4
P9644-1	5
P9644-2	5
P9644-3	5
P9802-1	7
P9802-2	7
P9802-3	7
P9802-4	7
P9802-5	7
P9965-1	7
P9965-2	7
Q102	2
Q103	2
Q114	2
Q115	2
Q152	2
Q153	2
Q164	2
Q165	2
Q202	2
Q203	2
Q206	2
Q207	2
Q230	2
Q231	2
Q254	2
Q255	2
Q256	2
Q257	2
Q283	2
Q284	2
Q285	2
Q302	3
Q303	3
Q327	3
Q328	3
Q382	3
Q382	3
Q384	3
Q397	3
Q402	3
Q403	3
Q413	3
Q419	3
Q420	3
Q421	3
Q422	3
Q423	3
Q428	3
Q429	3
Q440	2
Q441	2
Q460	3
Q463	3
Q509	4
Q511	4
Q525	4
Q576	4
Q578	4
Q583	7
Q586	7
Q756	6
Q770	6
Q775	6
Q779	6
Q780	6
Q785	6
Q789	6
Q804	7
Q814	7
Q825	7
Q829	7
Q835	7
Q840	7
Q845	7
Q885	7
Q908	7
Q928	7
Q930	7
Q935	7
Q938	7
Q939	7
Q944	7
Q946	7
Q947	7
R100	2
R101	2
R102	2
R103	2
R104	2
R105	2
R106	2
R108	2
R109	2
R114	2
R115	2
R116	2
R120	2
R121	2
R122	2
R125	2
R126	2
R130	2
R131	2
R132	2
R133	2
R135	2
R136	2
R138	2
R139	2
R142	2
R143	2
R144	2
R145	2
R150	2
R151	2
R152	2
R153	2
R154	2
R155	2
R156	2
R158	2
R159	2
R164	2
R165	2
R166	2
R170	2
R171	2
R172	2
R175	2
R176	2
R180	2
R181	2
R182	2
R183	2
R185	2
R186	2
R188	2
R189	2
R192	2
R193	2
R194	2
R195	2
R200	2
R202	2
R203	2
R204	2
R206	2
R207	2
R210	2
R212	2
R213	2
R215	2
R216	2
R217	2
R218	2
R219	2
R220	14
R222	2
R223	2
R225	2
R226	2
R227	2
R230	2
R231	2
R233	2
R234	2
R235	2
R236	2
R239	2
R240	2
R241	2
R242	2
R244	2
R245	2
R250	2
R251	2
R254	2
R255	2
R256	2
R257	2
R258	2
R259	2
R261	2
R262	2
R266	2
R267	2
R268	2
R269	2
R270	2
R271	2
R279	2
R281	2
R282	2
R283	2
R284	2
R285	2
R286	2
R287	2
R288	2
R289	2
R292	2
R293	2
R301	3
R302	3
R303	3
R304	3
R305	3
R306	3
R307	3
R309	3
R310	3
R311	3
R312	3
R314	3
R315	3
R317	3
R318	3
R319	3
R321	3
R322	3
R324	3
R326	3
R327	3
R328	3
R329	3
R330	3
R331	3
R332	3
R335	3
R336	3
R337	3
R339	3
R340	3
R342	3
R343	3
R344	3
R346	3
R347	3
R349	3
R350	3
R351	3
R352	3
R353	3
R354	3
R356	3
R357	3
R358	3
R359	3
R360	3
R361	3
R363	3
R365	3
R366	3
R367	3
R369	3

TABLE (cont)

A1—MAIN BOARD (cont)

CIRCUIT NUMBER	SCHEM NUMBER	CIRCUIT NUMBER	SCHEM NUMBER	CIRCUIT NUMBER	SCHEM NUMBER	CIRCUIT NUMBER	SCHEM NUMBER	CIRCUIT NUMBER	SCHEM NUMBER	CIRCUIT NUMBER	SCHEM NUMBER
R372	3	R510	4	R805	7	RT236	2	W535	2	W9001-4	2
R374	3	R511	4	R810	7	S901	7	W537	2	W9001-5	14
R381	3	R512	4	R814	7	T390	7	W538	2	W9001-6	2
R382	3	R513	4	R818	7	T906	7	W555	3	W9001-7	2
R384	3	R514	4	R820	7	T944	7	W556	14	W9001-8	2
R385	3	R516	4	R822	7	T948	7	W558	3	W9001-9	2
R386	3	R517	4	R823	7	TP397	3	W560	3	W9070-1	7
R387	3	R518	4	R825	7	TP460	3	W570	6	W9070-2	7
R388	3	R523	4	R826	7	TP504	4	W590	14	W9070-3	7
R389	3	R524	4	R828	7	TP537	2	W591	14	W9103-1	2
R390	3	R525	4	R830	7	TP842	7	W592	14	W9103-2	2
R392	3	R526	4	R832	7	TP900	7	W602	5	W9103-3	2
R393	3	R527	4	R834	7	TP940	7	W603	5	W9103-4	2
R395	3	R528	4	R835	7	TP950	7	W634	5	W9108-1	2
R397	7	R529	4	R836	7	TP961	14	W635	5	W9108-2	2
R398	7	R538	2	R840	7	U130	2	W648	5	W9108-3	2
R399	3	R539	2	R841	7	U180	2	W649	5	W9108-4	2
R402	3	R540	2	R842	7	U225	2	W732	6	W9150-1	7
R405	3	R541	2	R844	7	U310	3	W770	6	W9150-2	7
R407	3	R544	2	R845	7	U335	3	W780	6	W9400-10	5
R408	3	R545	2	R849	7	U350	3	W885	14	W9400-11	5
R411	3	R547	2	R851	7	U350	3	W954	14	W9400-12	5
R412	3	R548	2	R852	7	U350	3	W955	14	W9400-13	5
R413	3	R549	2	R853	7	U350	3	W956	14	W9400-14	5
R414	3	R555	3	R854	7	U350	3	W957	14	W9400-15	14
R415	3	R556	3	R858	7	U426	3	W959	14	W9400-16	14
R416	3	R558	3	R860	7	U426	3	W960	14	W9400-17	5
R417	3	R560	3	R870	7	U460	3	W961	14	W9400-18	14
R419	3	R561	3	R871	7	U460	3	W964	14	W9400-19	5
R420	3	R562	3	R872	7	U460	3	W965	14	W9400-1	5
R421	3	R564	3	R873	7	U460	3	W968	14	W9400-20	5
R422	3	R565	3	R874	7	U460	3	W971	14	W9400-21	5
R423	3	R566	6	R875	7	U460	3	W972	14	W9400-22	5
R424	3	R568	4	R877	7	U480	3	W974	14	W9400-23	14
R426	3	R569	4	R879	7	U480	3	W975	14	W9400-24	14
R427	3	R571	4	R885	7	U480	3	W976	14	W9400-25	14
R428	3	R572	4	R886	7	U480	3	W977	14	W9400-26	14
R429	3	R573	4	R888	7	U502	4	W979	14	W9400-27	14
R432	3	R574	4	R889	7	U504	4	W991	14	W9400-2	5
R433	3	R576	4	R890	7	U504	4	W992	14	W9400-3	14
R434	3	R577	4	R891	7	U506	4	W993	14	W9400-4	5
R435	3	R578	4	R892	7	U506	4	W995	14	W9400-5	5
R440	2	R580	4	R893	7	U532	4	W997	14	W9400-6	5
R441	2	R582	4	R894	7	U532	4	W998	14	W9400-7	5
R442	2	R583	7	R905	7	U532	4	W999	14	W9400-8	7
R443	2	R586	7	R906	7	U532	4	W9040	7	W9400-9	7
R444	2	R645	5	R907	7	U537	2	W9190	7	W9440-1	2
R446	3	R646	5	R908	7	U537	2	W9778	6	W9440-2	2
R448	2	R648	5	R910	7	U537	2	W9788	6	W9440-3	2
R449	2	R649	5	R912	7	U537	2	W9800	7	W9440-4	2
R451	14	R673	5	R913	7	U540	2	W9001-10	2	W9700-10	4
R452	3	R676	6	R914	7	U540	2	W9001-11	3	W9700-1	6
R453	3	R756	6	R915	7	U555	3	W9001-12	14	W9700-2	6
R454	3	R757	6	R916	7	U555	3	W9001-13	5	W9700-3	5
R455	3	R758	6	R917	7	U555	3	W9001-14	2	W9700-4	4
R457	3	R759	6	R919	7	U555	3	W9001-15	5	W9700-5	4
R458	3	R760	6	R921	7	U565	3	W9001-16	5	W9700-6	4
R459	3	R761	6	R922	7	U565	3	W9001-17	4	W9700-7	4
R460	3	R764	6	R925	7	U565	3	W9001-18	3	W9700-8	14
R461	3	R766	6	R926	7	U758	6	W9001-19	3	W9700-9	5
R462	3	R768	6	R927	7	U930	7	W9001-1	7	W9705-1	14
R463	3	R770	6	R928	7	U975	7	W9001-20	3	W9705-2	6
R464	3	R773	6	R929	7	VR200	2	W9001-21	6	W9705-3	6
R465	3	R775	6	R930	7	VR645	5	W9001-22	3	W9705-4	14
R469	3	R776	6	R934	7	VR712	5	W9001-23	3	W9705-5	6
R470	3	R777	6	R935	7	VR764	6	W9001-24	4	W9705-6	14
R471	3	R778	6	R937	7	VR782	6	W9001-25	4	W9705-7	14
R473	3	R779	6	R938	7	VR828	7	W9001-26	5	W9705-8	14
R474	3	R780	6	R939	7	VR925	7	W9001-27	5	W9870-10	7
R478	3	R782	6	R940	7	VR935	7	W9001-28	5	W9870-12	7
R479	3	R783	6	R941	7	VR943	7	W9001-29	4	W9870-14	7
R483	3	R785	6	R942	7	W282	2	W9001-2	2	W9870-1	7
R486	3	R786	6	R943	7	W283	2	W9001-30	4	W9870-2	7
R487	3	R787	6	R944	7	W310	3	W9001-31	3	W9870-3	7
R492	3	R788	6	R945	7	W335	3	W9001-32	3	W9870-4	7
R494	14	R789	6	R946	7	W350	3	W9001-33	3	W9870-5	7
R499	14	R792	6	R947	7	W351	3	W9001-34	3	W9870-7	7
R500	4	R793	6	R949	7	W408	14	W9001-35	3	W9870-8	7
R501	4	R796	14	R964	14	W410	3	W9001-36	3	W9991-1	14
R502	4	R797	14	R965	7	W419	3	W9001-37	3	W9991-2	14
R503	4	R799	14	R966	14	W428	3	W9001-38	3	W9991-3	14
R504	4	R800	7	R976	7	W429	3	W9001-39	3		
R505	4	R804	7	R978	7	W494	14	W9001-3	2		
R507	4										
R509	4										

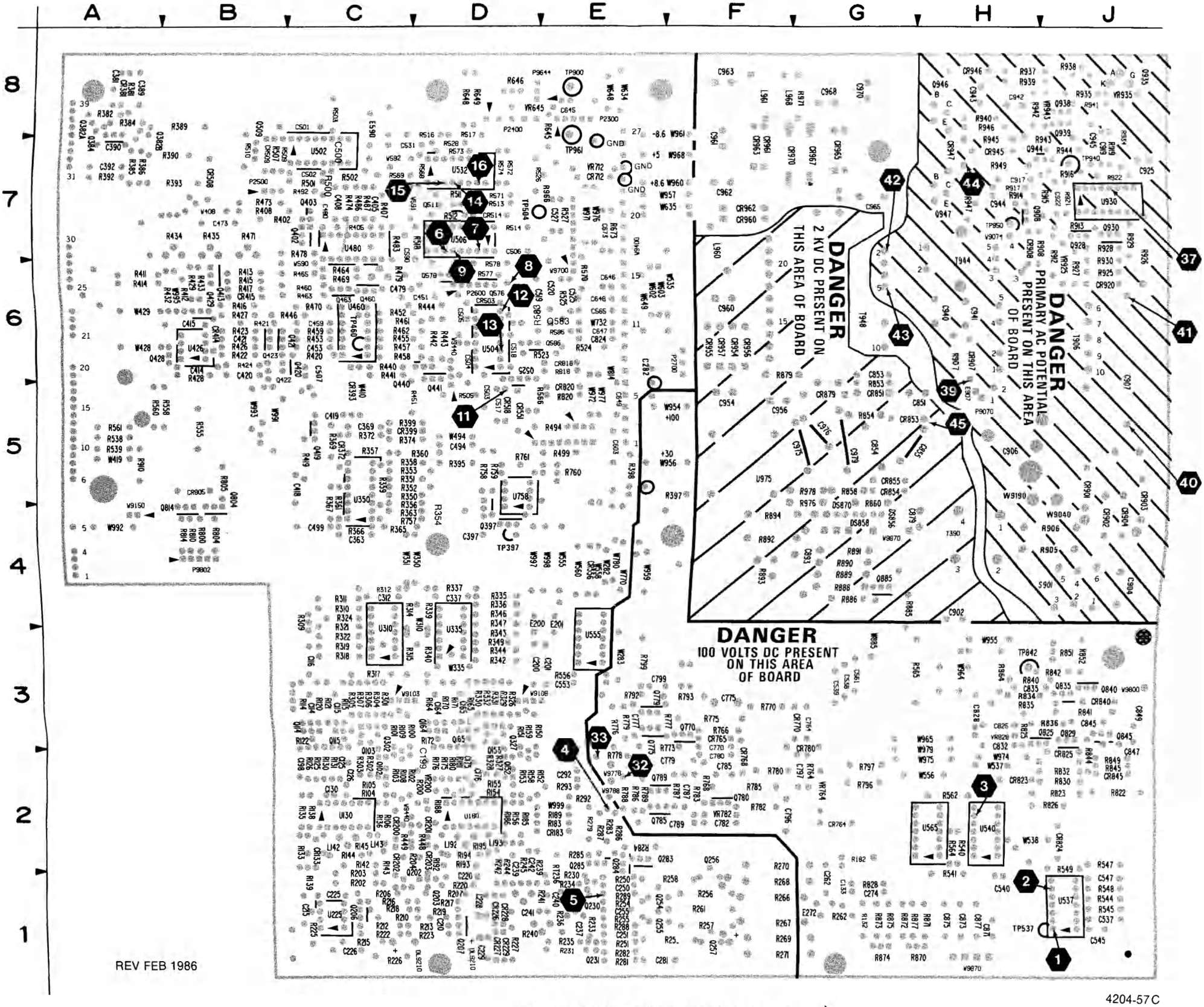

4204-57C

Figure 9-12. Circuit view of A1—Main board.

2236 CONTROL SETTINGS

DC Voltages

AC-GND-DC (both)	GND
VOLTS/DIV (both)	0.1V

AC Waveforms

VERTICAL MODE	BOTH, CHOP
A TRIGGER Mode	P-P AUTO

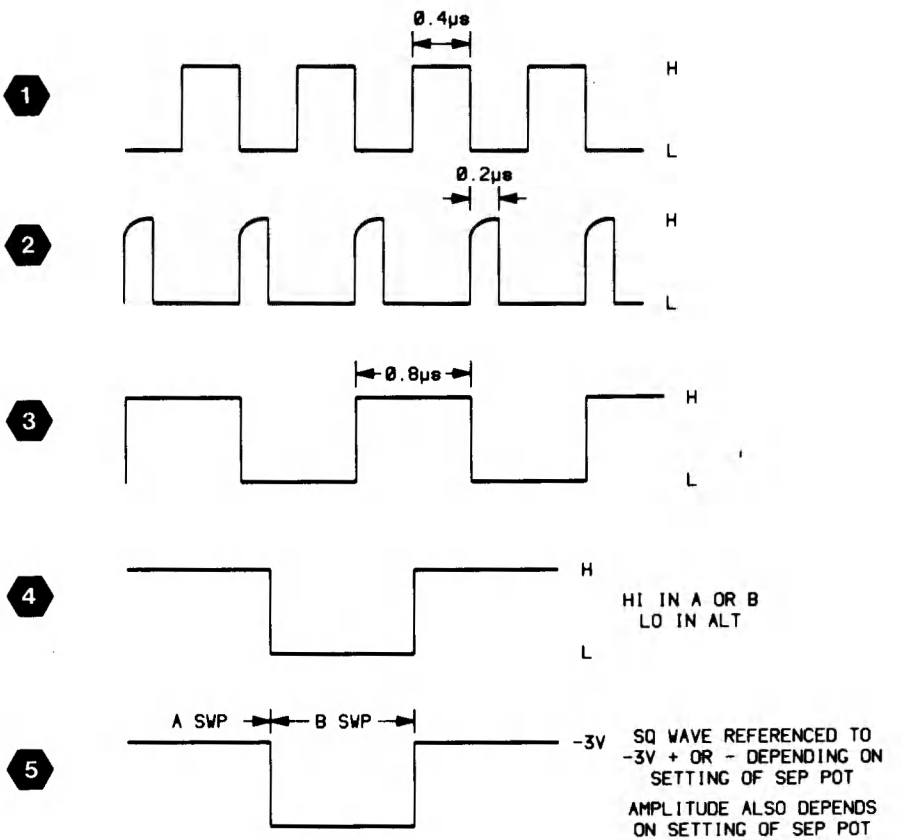

(4206-93) 4204-49

ASSEMBLY A1

CIRCUIT NUMBER	SCHEM LOCATION	BOARD LOCATION	CIRCUIT NUMBER	SCHEM LOCATION	BOARD LOCATION	CIRCUIT NUMBER	SCHEM LOCATION	BOARD LOCATION	CIRCUIT NUMBER	SCHEM LOCATION	BOARD LOCATION
C114	2D	3C	Q206	4J	1C	R185	7F	2D	R289	2N	2E
C115	3D	3C	Q207	6J	1D	R186	7F	2D	R292	1N	2E
C116	2E	3C	Q230	7N	2E	R188	5F	2D	R293	1N	2E
C125	3E	3C	Q231	3N	1E	R189	6F	2E	R440	7H	6C
C126	3F	3C	Q254	7P	1F	R192	8H	2D	R441	7G	6C
C130	3F	2C	Q255	3P	1F	R193	9H	2D	R442	6G	6D
C133	5F	2G	Q256	8P	2F	R194	8H	2D	R443	6G	6D
C164	8D	3D	Q257	2P	1F	R195	9H	2D	R444	6G	6D
C165	9D	3D	Q283	3M	2E	R200	5G	2D	R448	5H	2D
C175	9E	3D	Q284	2N	2E	R202	5H	2C	R449	5H	2C
C176	9F	3D	Q285	2P	2E	R203	5H	2C	R538	5E	5A
C180	9F	2D	Q440	6G	6D	R204	5H	2D	R539	6C	5A
C198	5F	3C	Q441	6G	6D	R206	4H	2C	R540	5E	2H
C199*	5G	3D				R207	6J	2D	R541	5E	2H
C204*	5J	1D	R100	2A	3C	R210	5J	1C	R544	5C	1J
C210	5J	1D	R101	3A	3C	R212	5J	1C	R545	5C	1J
C215	5J	1C	R102	2B	2D	R213	5J	1D	R547	4D	2J
C225	8J	2C	R103	3B	2C	R215	5J	1C	R548	4D	2J
C226	4K	1C	R104	2B	2C	R216	4J	1C	R549	4E	2J
C228	4L	1D	R105	3B	2C	R217	6J	1D			
C229	3L	1D	R106	2B	2C	R218	4J	1C	RT236	5N	2E
C237	4N	1E	R108	2B	2C	R219	6J	1D			
C239	5M	2D	R109	3B	3C	R222	5K	1C	TP537	4D	1J
C240	5M	1E	R114	2D	3C	R223	5K	1D			
C241	6M	1D	R115	3D	3C	R225	7J	1C	U130	1F	2C
C242	5M	2D	R116	3E	3C	R226	4L	1C	U180	9F	2D
C250	7N	2E	R120	2E	3C	R227	4M	1D	U225	7J	1C
C251	3N	1E	R121	3E	3C	R230	7M	2E	U537A	5D	1J
C255	3N	1E	R122	3E	3C	R231	3M	1E	U537B	4E	1J
C262	5P	2G	R125	2E	3C	R233	5N	1E	U537C	5D	1J
C281	2M	1F	R126	2E	3C	R234	6M	2E	U537D	5C	1J
C282	3L	6F	R130	2F	3C	R235	4M	1E	U540A	5E	2H
C292	1N	2E	R131	3F	3C	R236	5N	1E	U540B	5C	2H
C537	9M	1J	R132	5F	1G	R239	5M	2E			
C538	5D	3G	R133	5F	2C	R240	5M	1E	VR200	5G	2D
C539	6D	3G	R135	4F	2C	R241	5M	1D			
C540	9M	2H	R136	4F	2C	R242	5M	2D	W282	3L	4E
C545	5C	1J	R138	5F	2C	R244	5L	2D	W283	3M	3E
C547	4D	2J	R139	5G	2C	R245	6L	2D	W535	5D	7F
			R142	2H	2C	R250	7N	2E	W537	5D	3H
CR133	5F	2C	R143	4H	2C	R251	3N	1E	W538	5E	2J
CR183	5F	2E	R144	2H	2C	R254	7N	1E	W9001-10	4K	5A
CR200	5G	2C	R145	3H	2C	R255	3N	1E	W9001-14	5B	5A
CR201	6H	2D	R150	8B	3E	R256	8P	2F	W9001-2	2D	4A
CR202	5H	2C	R151	9B	3D	R257	2P	1F	W9001-3	3D	4A
CR203	6H	2D	R152	8B	2E	R258	7P	2F	W9001-4	2L	4A
CR226	4L	1D	R153	9B	2D	R259	3P	1F	W9001-6	7B	5A
CR227	4L	1D	R154	8B	2D	R261	5P	1F	W9001-7	8D	5A
CR228	4L	1D	R155	9B	2D	R262	5P	1G	W9001-8	9D	5A
CR229	4L	1D	R156	9B	2D	R266	7P	1G	W9001-9	6B	5A
			R158	9B	2D	R267	3P	1G	W9103-1	2A	3C
L142	1G	2C	R159	9B	3D	R268	6P	2G	W9103-2	3A	3C
L143	3G	2C	R164	8D	3D	R269	4P	1G	W9103-3	2A	3C
L192	8G	2D	R165	9D	3D	R270	6P	2G	W9103-4	3A	3C
L193	9G	2D	R166	9E	3D	R271	5P	1G	W9108-1	8A	3D
			R170	9E	3D	R279	3M	2E	W9108-2	9A	3D
Q102	2B	2C	R171	9D	3D	R281	2L	1E	W9108-3	8A	3D
Q103	3B	3C	R172	9E	3D	R282	2M	1E	W9108-4	9A	3D
Q114	2E	3C	R175	9E	3D	R283	3M	2E	W9440-1	5G	6D
Q115	3E	3C	R176	8F	3D	R284	2N	2E	W9440-2	5G	6D
Q152	8B	2D	R180	8F	3D	R285	2P	2E	W9440-3	5G	6D
Q153	9B	3D	R181	9F	3D	R286	2N	2E	W9440-4	5G	6D
Q164	8E	3D	R182	6F	2G	R287	2P	2E			
Q165	9E	3D	R183	6F	2E	R288	2N	1E			
Q202	5H	2C									
Q203	6J	2D									

Partial A1 also shown on diagrams 3, 4, 5, 6, 7 and 14.

VERTICAL PREAMP & OUTPUT AMPLIFIER 2 (cont)

ASSEMBLY A3

CIRCUIT NUMBER	SCHEM LOCATION	BOARD LOCATION	CIRCUIT NUMBER	SCHEM LOCATION	BOARD LOCATION	CIRCUIT NUMBER	SCHEM LOCATION	BOARD LOCATION	CIRCUIT NUMBER	SCHEM LOCATION	BOARD LOCATION
C634*	4B	1D	R162	9D	1C	W534	5B	3B	W9000-7	8D	4B
CR534	4A	2B	R201	7A	2B	W9000-10	4K	4B	W9000-8	9D	4B
CR537	4B	2B	R280	2L	1C	W9000-14	5B	4B	W9000-9	6B	4B
CR538	6B	2B	S200	6A	2B	W9000-2	2D	4A			
R111	2D	1B	S226	3K	2C	W9000-3	3D	4A			
R112	3D	1B	S545	4A	2C	W9000-4	2L	4A			
R161	9D	1C	S550	5A	2B	W9000-6	7B	4B			

Partial A3 also shown on diagrams 1, 3, 4, 5, 6, 7 and 14.

CHASSIS MOUNTED PARTS

CIRCUIT NUMBER	SCHEM LOCATION	BOARD LOCATION	CIRCUIT NUMBER	SCHEM LOCATION	BOARD LOCATION	CIRCUIT NUMBER	SCHEM LOCATION	BOARD LOCATION	CIRCUIT NUMBER	SCHEM LOCATION	BOARD LOCATION
C9272	8S	CHASSIS	DL9210	5K	CHASSIS	R9273	2S	CHASSIS	W9273	2S	CHASSIS
C9273	2S	CHASSIS									
			R9272	8S	CHASSIS	W9272	8S	CHASSIS			

***See Parts List for serial number ranges.**

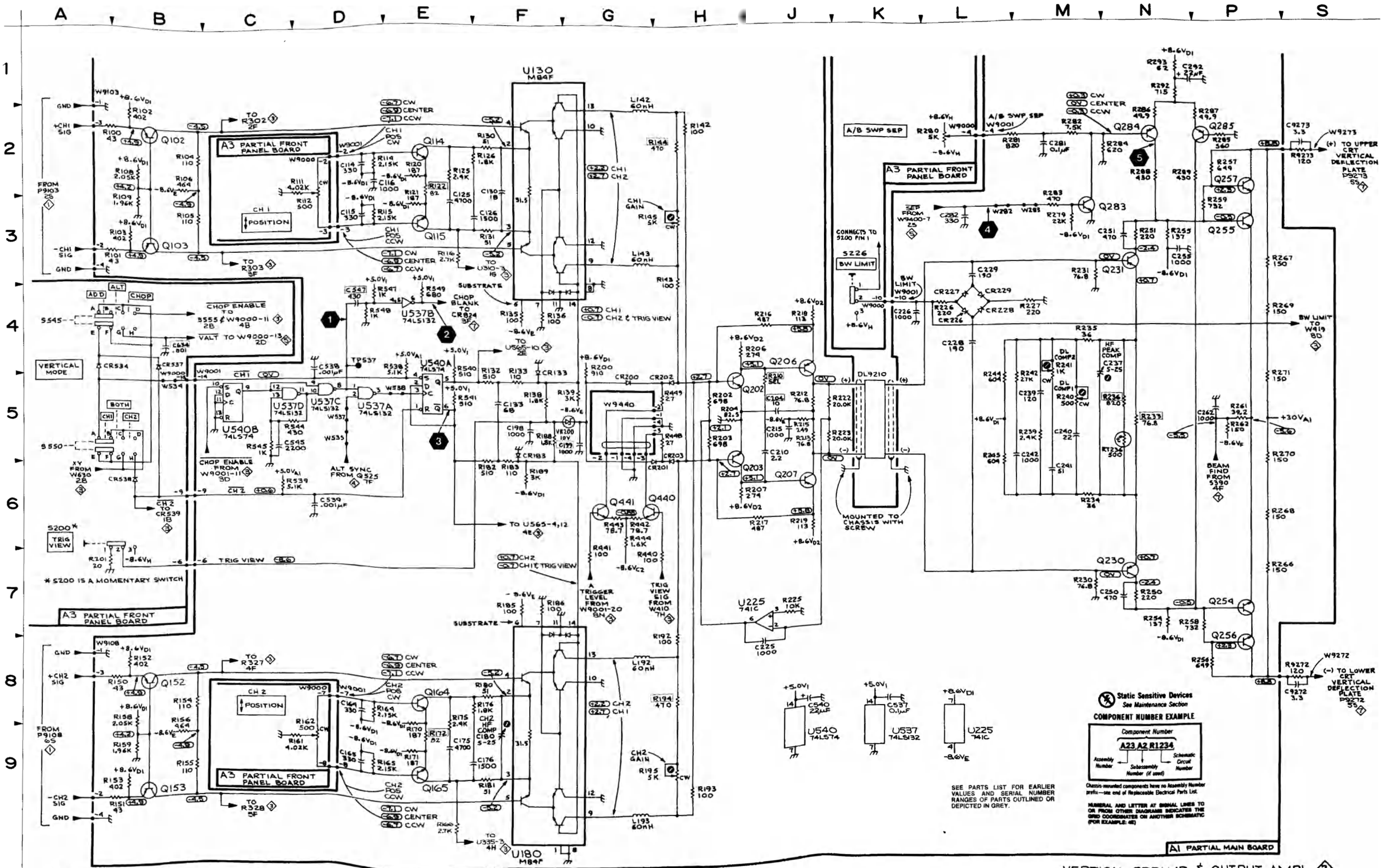

VERTICAL PREAMP & OUTPUT AMPL 2

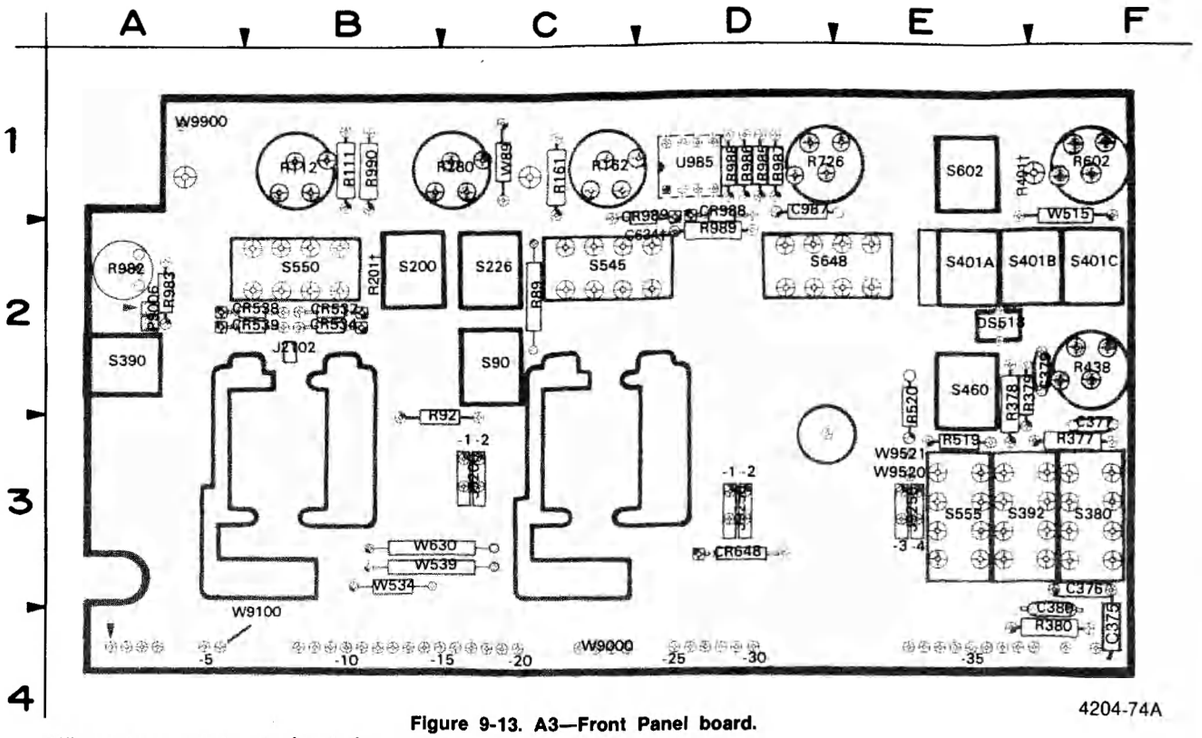

4204-74A

Figure 9-13. A3—Front Panel board.

†These components are located on the reverse side of the board.

A3—FRONT PANEL BOARD

CIRCUIT NUMBER	SCHEM NUMBER	CIRCUIT NUMBER	SCHEM NUMBER	CIRCUIT NUMBER	SCHEM NUMBER
C375	3	R602	5	W9000-12	14
C376	3	R726	6	W9000-13	5
C377	3	R982	7	W9000-14	2
C379	3	R983	7	W9000-15	5
C380	3	R985	6	W9000-16	5
C634	2	R986	6	W9000-17	4
C987	6	R987	6	W9000-18	3
CR534	2	R988	6	W9000-19	3
CR537	2	R989	6	W9000-1	7
CR538	2	R990	6	W9000-20	3
CR539	3	S90	1	W9000-21	6
CR648	3	S200	2	W9000-22	3
CR988	6	S226	2	W9000-23	3
CR989	6	S380	3	W9000-24	4
DS518	4	S390	7	W9000-25	4
J2102	1	S392	3	W9000-26	5
J9200-1	1	S401	4	W9000-27	5
J9200-2	1	S401	4	W9000-28	5
J9250-1	6	S401	4	W9000-29	4
J9250-2	3	S460	3	W9000-2	2
J9250-3	3	S545	2	W9000-30	4
J9250-4	4	S550	2	W9000-31	3
P9006-1	7	S555	3	W9000-32	3
P9006-2	7	S602	5	W9000-33	3
R89	1	S648	5	W9000-34	3
R92	1	U985	6	W9000-35	3
R111	2	W89	14	W9000-36	3
R112	2	W515	4	W9000-37	3
R161	2	W534	2	W9000-38	3
R162	2	W539	3	W9000-39	3
R201	2	W630	3	W9000-3	2
R280	2	W9100	1	W9000-4	2
R377	3	W9520	4	W9000-5	14
R378	3	W9521	4	W9000-6	2
R379	3	W9900	6	W9000-7	2
R380	3	W9000-10	2	W9000-8	2
R401	4	W9000-11	3	W9000-9	2
R438	3				
R519	4				
R520	4				

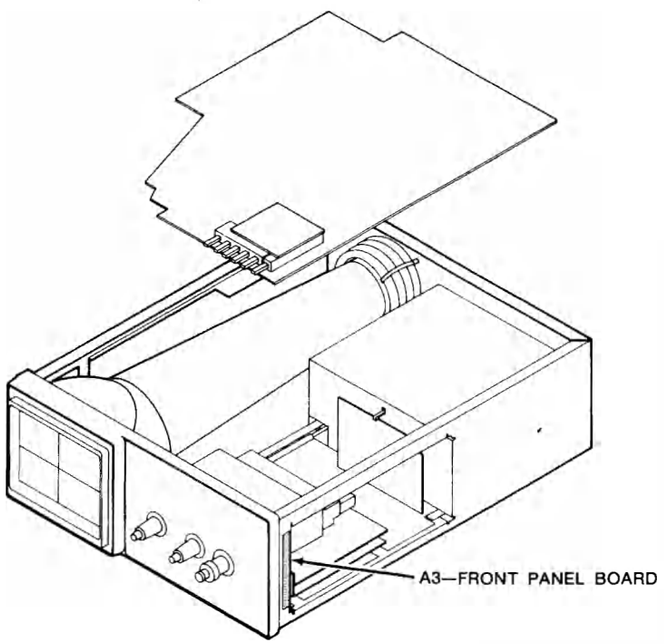

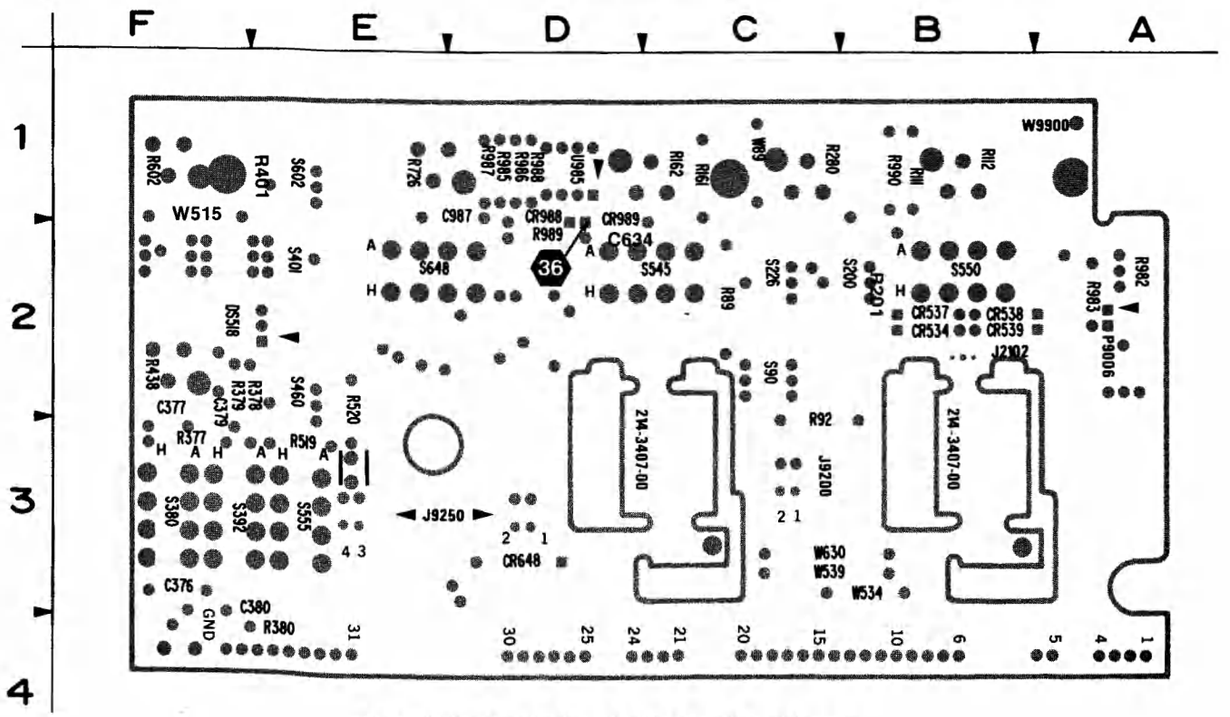

Figure 9-14. Circuit view of A3—Front Panel board.

ASSEMBLY A1

CIRCUIT NUMBER	SCHEM LOCATION	BOARD LOCATION	CIRCUIT NUMBER	SCHEM LOCATION	BOARD LOCATION	CIRCUIT NUMBER	SCHEM LOCATION	BOARD LOCATION	CIRCUIT NUMBER	SCHEM LOCATION	BOARD LOCATION
C312	2H	4C	R303	3G	3C	R390	4D	8B	R564	4F	2H
C337	5H	4D	R304	2G	3C	R392	7D	7A	R565	4F	3H
C363	1M	4C	R305	3G	3C	R393	7E	7B			
C369	7F	5C	R306	1G	3C	R395	6F	5D	TP397	6E	5D
C381	5C	8A	R307	3G	3C	R399	6E	5C	TP460	7J	6C
C389	5D	8A	R309	2G	4C	R402	5N	7C			
C390	4E	8A	R310	2G	4C	R405	5P	7C	U310	1G	4C
C392	7D	7A	R311	2G	4C	R407	5P	7C	U335	4H	4D
C397	6F	4D	R312	2H	4C	R408	5N	7B	U350A	1L	5C
C405	5P	7C	R314	3J	4C	R411	8H	7A	U350B	3M	5C
C408	5P	7C	R315	1J	3D	R412	9H	6B	U350C	3L	5C
C414	8J	6B	R317	1F	3C	R413	9H	7B	U350D	3K	5C
C415	9J	6B	R318	1G	3C	R414	8H	7A	U350E	1K	5C
C418	8E	5C	R319	2H	4C	R415	9J	7B	U426A	8K	6B
C419	7F	5C	R321	3J	4C	R416	8H	6B	U426B	9K	6B
C420	7J	6B	R322	3J	4C	R417	9J	6B	U460A	7L	6C
C421	9K	6B	R324	3H	4C	R419	8F	5C	U460B	7L	6C
C453	7M	6C	R326	5G	3D	R420	7G	6C	U460C	7L	6C
C454*	8M	6A	R327	4G	3D	R421	9J	6B	U460D	7K	6C
C459	7N	6C	R328	5G	3D	R422	8J	6B	U460E	7K	6C
C473	4P	7B	R329	4G	3D	R423	9J	6B	U460F	7K	6C
C479	6M	6C	R330	5G	3D	R424	7J	6B	U480A	6P	7C
C480	1P	7C	R331	4G	3D	R426	8J	6B	U480B	5S	7C
C553	3P	3E	R332	5G	3D	R427	9J	6B	U480C	5L	7C
C561	4D	3G	R335	5H	4D	R428	8K	6B	U480D	5M	7C
C565	4F	6E	R336	5H	4D	R429	9K	7B	U555A	2D	4E
CR372	7G	5C	R337	5H	4D	R432	9K	6B	U555B	1E	4E
CR381	5C	8A	R339	5J	4D	R433	9K	7B	U555C	3E	4E
CR393	7F	6C	R340	4J	3D	R434	9K	7B	U555D	3E	4E
CR399	7F	5C	R342	3F	3D	R435	9K	7B	U565B	3F	2H
CR414	8J	6B	R343	3G	4D	R446	7M	6C	U565C	2F	2H
CR415	9J	6B	R344	5J	4D	R452	8K	6C	U565D	4F	2H
CR556	2D	4E	R346	6J	4D	R453	7L	6C			
			R347	6J	4D	R454*	8M	6A	W310	1J	4D
P2500-1	6P	7B	R349	6H	4D	R455	8L	6C	W335	4J	3D
P2500-2	6P	7B	R350	1K	5C	R457	6K	6C	W350	1K	4D
			R351	3K	5C	R458	7L	6C	W351	3K	4D
Q302	2G	3C	R352	2K	5C	R459	7N	6C	W410	7G	6C
Q303	3G	3C	R353	2K	5C	R460	4K	7C	W419	8E	5A
Q327	4G	3D	R354*	2L	5D	R461	7P	6C	W428	8K	6A
Q328	5G	3D	R356	1L	5C	R462	7P	6C	W429	9K	6A
Q382A	5D	8A	R357	3L	5C	R463	4L	6C	W555	2D	4E
Q382B	5D	8A	R358	2K	5C	R464	5L	7C	W558	2D	4E
Q384	5E	8A	R359	2L	5C	R465	5M	7C	W560	3D	4E
Q397	6F	5D	R360	3L	5D	R469	5M	7C	W9001-11	4C	5A
Q402	5N	7C	R361	3K	5C	R470	5L	6C	W9001-18	2C	6A
Q403	5N	7C	R363	1L	5C	R471	5L	7B	W9001-19	8N	6A
Q413	9J	7B	R365	2M	5C	R473	6P	7B	W9001-20	8M	6A
Q419	8F	5C	R366	3L	5C	R474	6N	7C	W9001-22	8L	6A
Q420	7J	6C	R367	4M	5C	R478	5N	7C	W9001-23	9L	6A
Q421	9J	6C	R369	7F	5C	R479	6M	7C	W9001-31	6C	8A
Q422	7J	6B	R372	7G	5C	R483	6M	7C	W9001-32	2C	8A
Q423	9K	6B	R374	7G	5C	R486	5S	7C	W9001-33	2C	8A
Q428	8K	6B	R381	5C	8A	R487	6P	7C	W9001-34	3C	8A
Q429	9K	6B	R382	5D	8A	R492	6S	7C	W9001-35	7C	8A
Q460	4K	7C	R384	5D	8A	R555	1C	5B	W9001-36	6C	8A
Q463	4L	7C	R385	5E	8A	R556	1D	3E	W9001-37	7C	8A
			R386	6D	8A	R558	2C	6A	W9001-38	6C	8A
R301	2G	3C	R387	5D	8B	R560	3C	6B	W9001-39	4C	8A
R302	2G	3C	R388	5D	8B	R561	4D	5A			
			R389	6D	8B	R562	2E	2H			

Partial A1 also shown on diagrams 2, 4, 5, 6, 7 and 14.

ASSEMBLY A3

CIRCUIT NUMBER	SCHEM LOCATION	BOARD LOCATION	CIRCUIT NUMBER	SCHEM LOCATION	BOARD LOCATION	CIRCUIT NUMBER	SCHEM LOCATION	BOARD LOCATION	CIRCUIT NUMBER	SCHEM LOCATION	BOARD LOCATION
C375*	6B	4F	J9250-3	3B	3E	S460	8N	2E	W9000-23	9M	4C
C376	5B	3F				S555	2B	3E	W9000-31	6C	4E
C377	5B	3F	R377	5B	3F				W9000-32	2C	4E
C379	6B	2F	R378	6B	2E	W539	1B	3B	W9000-33	2C	4E
C380	5B	3F	R379	6B	2E	W630	2B	3B	W9000-34	3C	4E
			R380	5B	4F	W9000-11	4C	4B	W9000-35	7C	4E
CR539	1B	2B	R438	8M	2F	W9000-18	2C	4C	W9000-36	6C	4E
CR648	1B	3D				W9000-19	8N	4C	W9000-37	7C	4E
			S380	4B	3F	W9000-20	8M	4C	W9000-38	6C	4E
J9250-2	2B	3D	S392	6B	3E	W9000-22	8M	4C	W9000-39	4C	4F

Partial A3 also shown on diagrams 1, 2, 4, 5, 6, 7 and 14.

ASSEMBLY A4

CIRCUIT NUMBER	SCHEM LOCATION	BOARD LOCATION	CIRCUIT NUMBER	SCHEM LOCATION	BOARD LOCATION	CIRCUIT NUMBER	SCHEM LOCATION	BOARD LOCATION	CIRCUIT NUMBER	SCHEM LOCATION	BOARD LOCATION
P9250-2	2A	3E	P9250-3	3A	2E						

Partial A4 also shown on diagrams 4, 5 and 6.

CHASSIS MOUNTED PARTS

CIRCUIT NUMBER	SCHEM LOCATION	BOARD LOCATION	CIRCUIT NUMBER	SCHEM LOCATION	BOARD LOCATION	CIRCUIT NUMBER	SCHEM LOCATION	BOARD LOCATION	CIRCUIT NUMBER	SCHEM LOCATION	BOARD LOCATION
J9376	5A	CHASSIS	R9376	5A	CHASSIS						

***See Parts List for serial number ranges.**

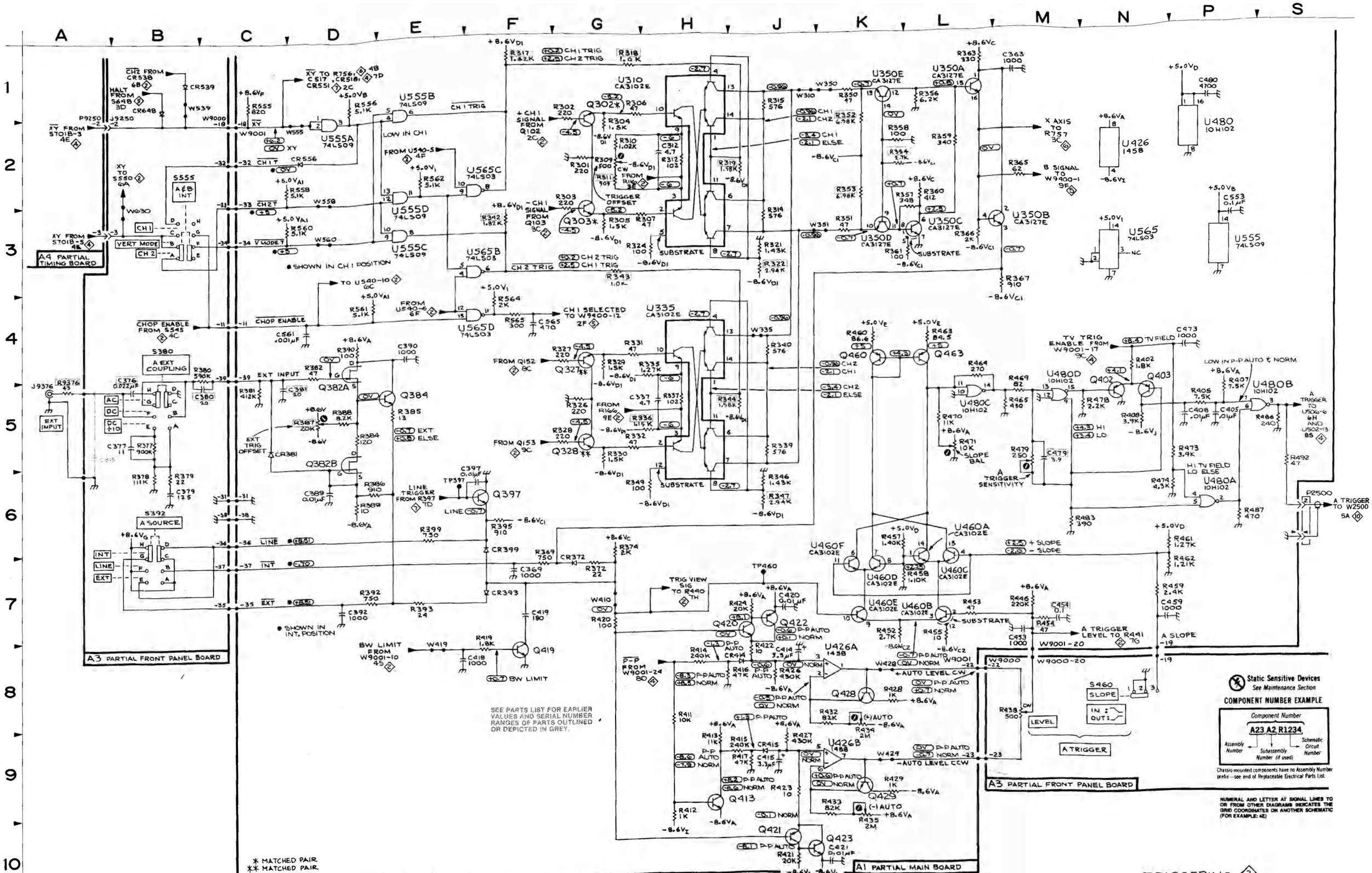

4204-09
REV A PR 1986

TRIGGERING 3

2236

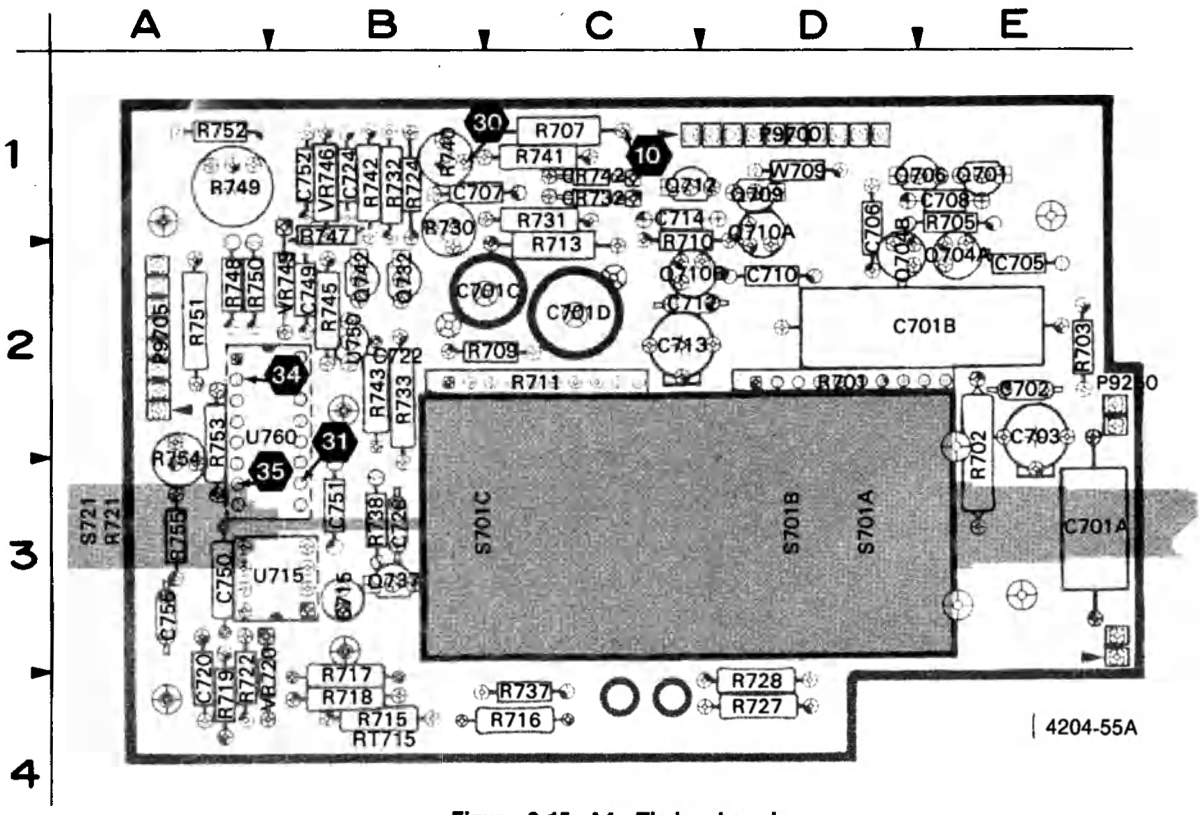

Figure 9-15. A4—Timing board.

A4—TIMING BOARD

CIRCUIT NUMBER	SCHEM NUMBER	CIRCUIT NUMBER	SCHEM NUMBER	CIRCUIT NUMBER	SCHEM NUMBER
C701	4	P9700-7	4	R721	4
C701	4	P9700-8	5	R722	4
C701	5	P9700-9	5	R724	6
C701	5	P9705-1	6	R727	6
C702	4	P9705-2	6	R728	6
C703	4	P9705-3	6	R730	6
C705	4	P9705-4	6	R731	6
C706	4	P9705-5	6	R732	6
C707	6	P9705-6	6	R733	6
C708	4	P9705-7	6	R737	6
C710	5	P9705-8	6	R738	6
C712	5	Q701	4	R740	6
C713	5	Q704	4	R741	6
C714	5	Q704	4	R742	6
C715	4	Q706	4	R743	6
C720	4	Q709	5	R745	6
C722	4	Q710	5	R747	6
C724	6	Q710	5	R748	6
C728	6	Q712	5	R749	6
C749	6	Q732	6	R750	6
C750	6	Q737	6	R751	6
C751	6	Q742	6	R752	6
C752	6	R701	4	R753	6
C755	6	R702	4	R754	6
CR732	6	R703	4	R755	6
CR742	6	R705	4	RT715	4
P9250-1	6	R707	4	S701	4
P9250-2	3	R709	5	S701	4
P9250-3	3	R710	5	S701	5
P9250-4	4	R711	5	S721	6
P9700-10	4	R713	5	U715	4
P9700-1	6	R715	4	U750	6
P9700-2	6	R716	4	U760	6
P9700-3	5	R717	4	VR720	4
P9700-4	4	R718	4	VR746	6
P9700-5	4	R719	4	VR749	6
P9700-6	4			W709	5

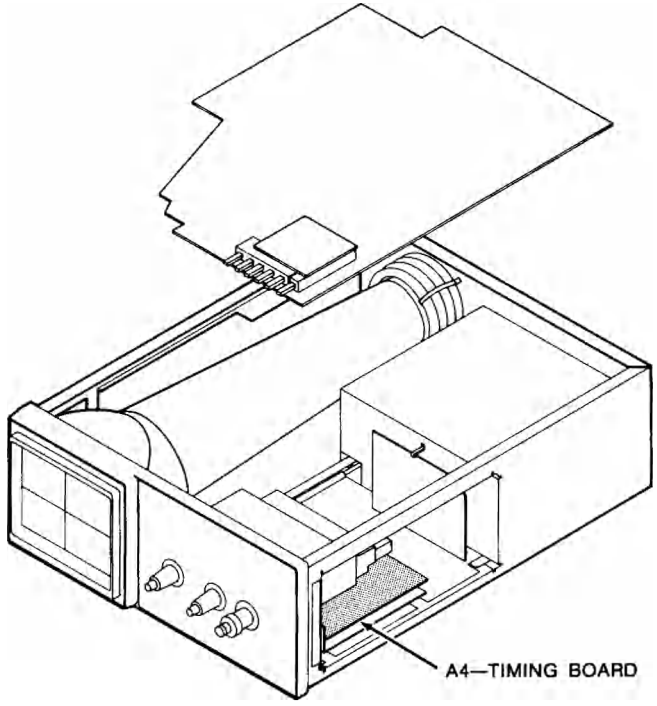

2236 CONTROL SETTINGS

DC Voltages

A INTENSITY	Midrange
HORIZONTAL MODE	A
A SEC/DIV	0.1 ms
A TRIGGER Mode	P-P AUTO

AC Waveforms

VERTICAL MODE	CH 1
CH 1 VOLTS/DIV	1V
CH 1 AC-GND-DC	DC
HORIZONTAL MODE	A
A TRIGGER LEVEL	Midrange
A TRIGGER Mode	P-P AUTO
A SOURCE	INT
A&B INT	CH 1
CH 1 INPUT SIGNAL	1-kHz sine wave, 4V P-P

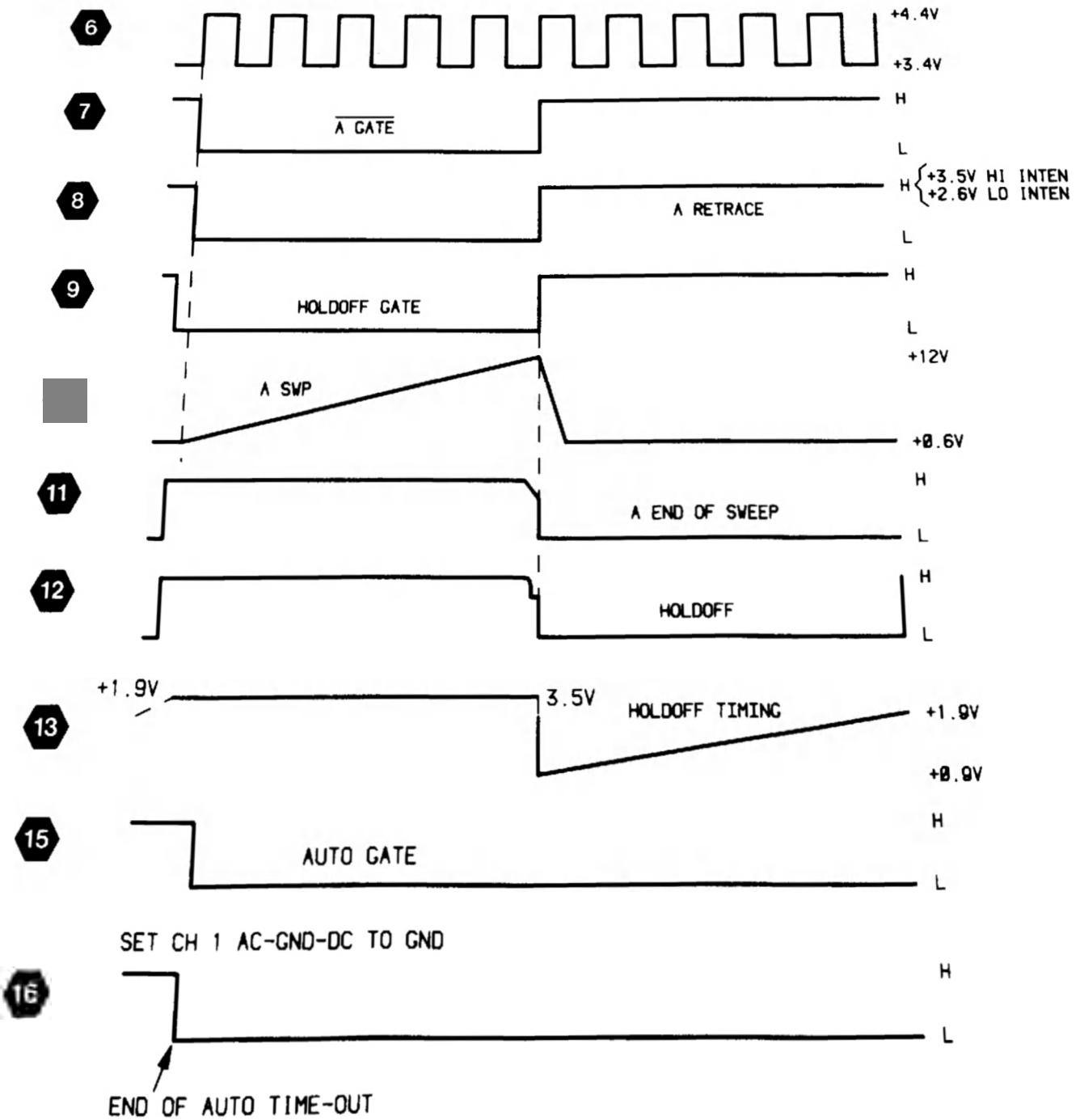

(4206-97) 4204-50

ASSEMBLY A1

CIRCUIT NUMBER	SCHEM LOCATION	BOARD LOCATION	CIRCUIT NUMBER	SCHEM LOCATION	BOARD LOCATION	CIRCUIT NUMBER	SCHEM LOCATION	BOARD LOCATION
C500	9E	8C	Q578	7L	7D	R576	7K	7D
C501	9E	8C	R500	9D	8C	R577	7L	7D
C502	9P	7C	R501	9E	7C	R578	7L	7D
C503	9P	6D	R502	8E	7C	R580	7L	6D
C504	5F	6D	R503	9E	8C	R582	7L	7D
C505	6E	6D	R504	5F	6D			
C506	9M	7D	R505	5E	6D	TP504	7E	7E
C517	7D	6D	R507	9F	8B			
C518	6D	6D	R509	9F	8C	U502	8E	8C
C519	6E	7E	R510	9J	8B	U504A	6F	6D
C520	6D	7E	R511	8J	7D	U504B	7D	6D
C525	8K	7E	R512	7J	7D	U506A	6H	7D
C527	8M	7E	R513	7J	7D	U506B	7H	7D
C529	8M	8D	R514	7K	7D	U532A	8H	7D
C531	9N	8D	R516	8J	8D	U532B	7F	7D
			R517	8H	8D	U532C	7G	7D
CR503	7E	6D	R518	6G	7D	U532D	8F	7D
CR508	8D	7B	R523	7D	6E			
CR509	9F	8B	R524	8D	6E	W9001-17	9B	6A
CR514	7J	7D	R525	8K	6E	W9001-24	8B	6A
CR518	7E	6D	R526	7F	7E	W9001-25	5B	7A
CR529	8M	8E	R527	7M	7E	W9001-29	9K	7A
			R528	7F	8D	W9001-30	9B	7A
P2600-1	6M	7D	R529	8M	8D	W9700-10	7M	7E
P2600-2	6M	7D	R568	8D	7D	W9700-4	5D	7E
P2850-1	5M	6D	R569	8D	7C	W9700-5	5D	7E
			R571	8G	7D	W9700-6	5D	7E
Q509	9F	8B	R572	7G	8D	W9700-7	8M	7E
Q511	7K	7D	R573	8H	8D			
Q525	7E	6D	R574	7G	7D			
Q576	6K	7D						

Partial A1 also shown on diagrams 2, 3, 5, 6, 7 and 14.

ASSEMBLY A3

CIRCUIT NUMBER	SCHEM LOCATION	BOARD LOCATION	CIRCUIT NUMBER	SCHEM LOCATION	BOARD LOCATION	CIRCUIT NUMBER	SCHEM LOCATION	BOARD LOCATION
DS518	9L	2E	S401A	5A	2E	W9000-17	9B	4C
			S401B	8A	2E	W9000-24	8B	4C
J9250-4	4B	3E	S401C	9A	2F	W9000-25	5B	4D
						W9000-29	9K	4D
R401	9A	1E	W515	9A	1F	W9000-30	9B	4D
R519	3B	1E	W9520	4B	3E			
R520	3B	2E	W9521	3B	3E			

Partial A3 also shown on diagrams 1, 2, 3, 5, 6, 7 and 14.

ASSEMBLY A4

CIRCUIT NUMBER	SCHEM LOCATION	BOARD LOCATION	CIRCUIT NUMBER	SCHEM LOCATION	BOARD LOCATION	CIRCUIT NUMBER	SCHEM LOCATION	BOARD LOCATION
C701A	1M	3E	P9700-6	4D	1D	R716	3D	4C
C701B	1M	2E	P9700-7	8N	1D	R717	2E	4B
C702	2N	2E				R718	2E	4B
C703	2N	2E	Q701	2N	1E	R719	3F	4A
C705	2P	2E	Q704A	2P	2E	R721	2F	3A
C706	3P	1D	Q704B	3P	2D	R722	2F	4A
C708	2P	1E	Q706	2P	1D			
C715	3D	3B				RT715	3E	4B
C720	3F	4A	R701	1F	2D			
C722'	2F	2B	R702	1G	2E	S701A	1J	3D
P9250-4	4B	2E	R703	1M	2E	S701B	1D	3D
P9700-10	7N	1D	R705	2P	1E			
P9700-4	4D	1D	R707	1P	1C	U715	2E	3B
P9700-5	4D	1D	R715	3E	4B			
						VR720	2F	4A

Partial A4 also shown on diagrams 3, 5 and 6.

CHASSIS MOUNTED PARTS

CIRCUIT NUMBER	SCHEM LOCATION	BOARD LOCATION	CIRCUIT NUMBER	SCHEM LOCATION	BOARD LOCATION	CIRCUIT NUMBER	SCHEM LOCATION	BOARD LOCATION
R9521	3A	CHASSIS						

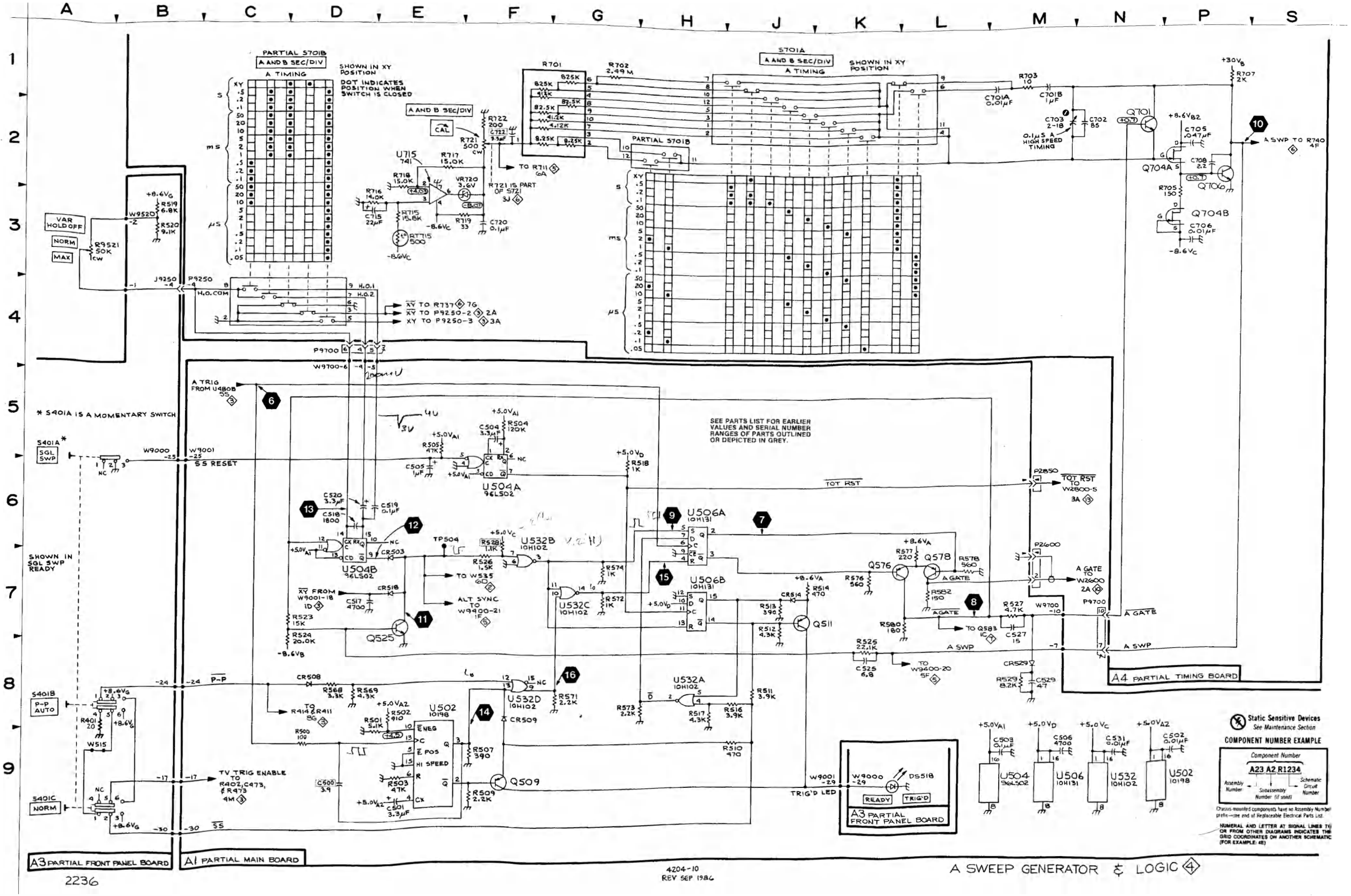
PARTIAL S701B
A AND B SEC/DIV
A TIMING
SHOWN IN XY POSITION
DOT INDICATES POSITION WHEN SWITCH IS CLOSED
A AND B SEC/DIV
CAL
R722 200
R721 500 CW
R701
R702 2.49 M
S701A
A AND B SEC/DIV
A TIMING
SHOWN IN XY POSITION
R703 10
C701A 0.01µF
C701B 1µF
C703 2-18
C702 85
0.1µS A HIGH SPEED TIMING
Q701
+8.6VB2
C705 .047µF
C708 2.2
Q704A
Q704B
Q706
R705 150
C706 0.01µF
-8.6Vc
+30VB
R707 2K
A SWP TO R740 4F
U715 741
R717 15.0K
R718 15.0K
R716 14.0K
C715 22µF
R715 15.8K
VR720 3.6V
R719 33
C720 0.1µF
R721 IS PART OF S721
TO R711 6A
VAR HOLD OFF
NORM
MAX
R9521 50K CW
+8.6VG
R519 6.8K
R520 9.1K
W9520
J9250
P9250
H.O.COM
H.O.1
H.O.2
XY TO R737 7G
XY TO P9250-2 2A
XY TO P9250-3 3A
P9700
W9700-6
A TRIG FROM U480B 5S
* S401A IS A MOMENTARY SWITCH
S401A* SGL SWP
W9000
W9001
SS RESET
SHOWN IN SGL SWP READY
S401B P-P AUTO
S401C NORM
R401 20
W515
TV TRIG ENABLE TO R402, C473, & R473 4M
SEE PARTS LIST FOR EARLIER VALUES AND SERIAL NUMBER RANGES OF PARTS OUTLINED OR DEPICTED IN GREY.
U504A 96LS02
U504B 96LS02
U506A 10H131
U506B 10H131
U532B 10H102
U532C 10H102
U532D 10H102
U532A 10H102
U502 10198
Q525
Q509
Q511
Q576
Q578
TOT RST
P2850
TOT RST TO W2800-5 3A
P2600
A GATE TO W2600 2A
A GATE
A SWP
TO Q583 1C
TO W9400-20 5F
TO W9400-21 1F
ALT SYNC TO W9400-21 1F
TO W535 6D
XY FROM W9001-18 1D
TRIG'D LED
W9000 -29
DS518
READY
TRIG'D
A3 PARTIAL FRONT PANEL BOARD
A4 PARTIAL TIMING BOARD
A1 PARTIAL MAIN BOARD
A3 PARTIAL FRONT PANEL BOARD
Static Sensitive Devices
See Maintenance Section
COMPONENT NUMBER EXAMPLE
Component Number
A23 A2 R1234
Assembly Number
Subassembly Number (if used)
Schematic Circuit Number
Chassis-mounted components have no Assembly Number prefix—see end of Replaceable Electrical Parts List.
NUMERAL AND LETTER AT SIGNAL LINES TO OR FROM OTHER DIAGRAMS INDICATES THE GRID COORDINATES ON ANOTHER SCHEMATIC (FOR EXAMPLE: 4E)
4204-10
REV SEP 1986
A SWEEP GENERATOR & LOGIC 4
2236

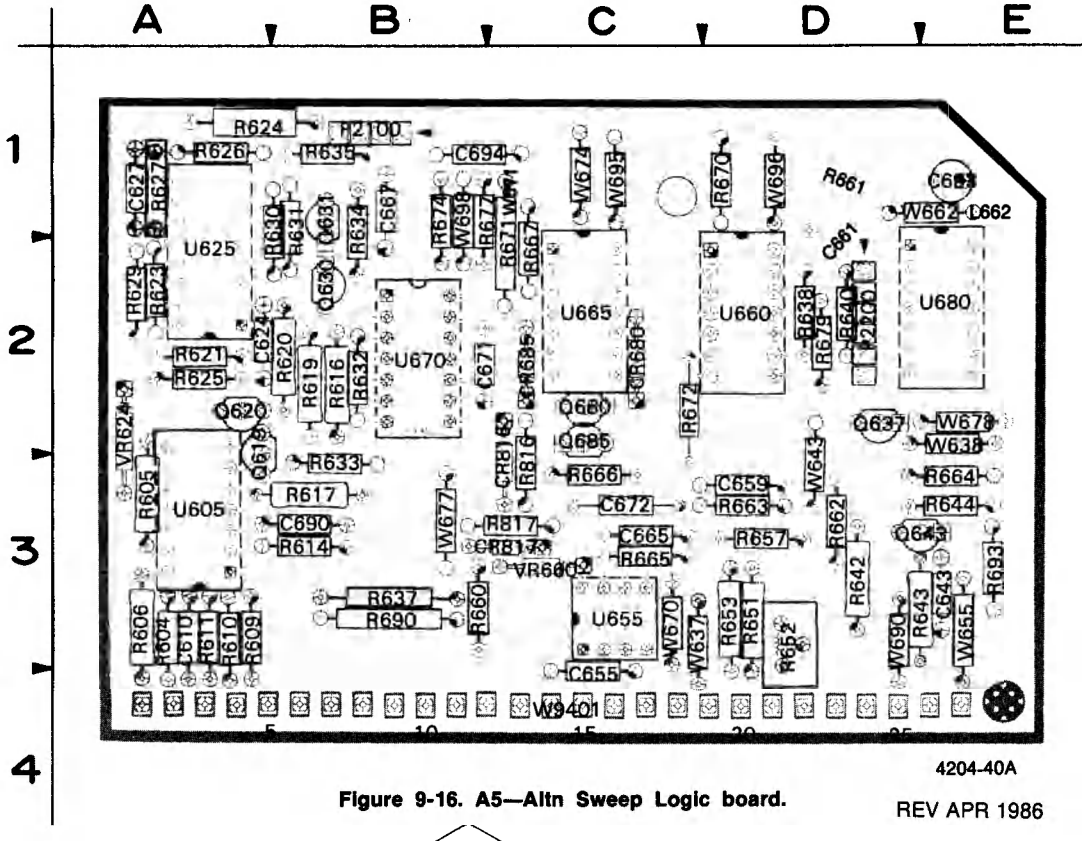

Figure 9-16. A5—Altn Sweep Logic board.

REV APR 1986

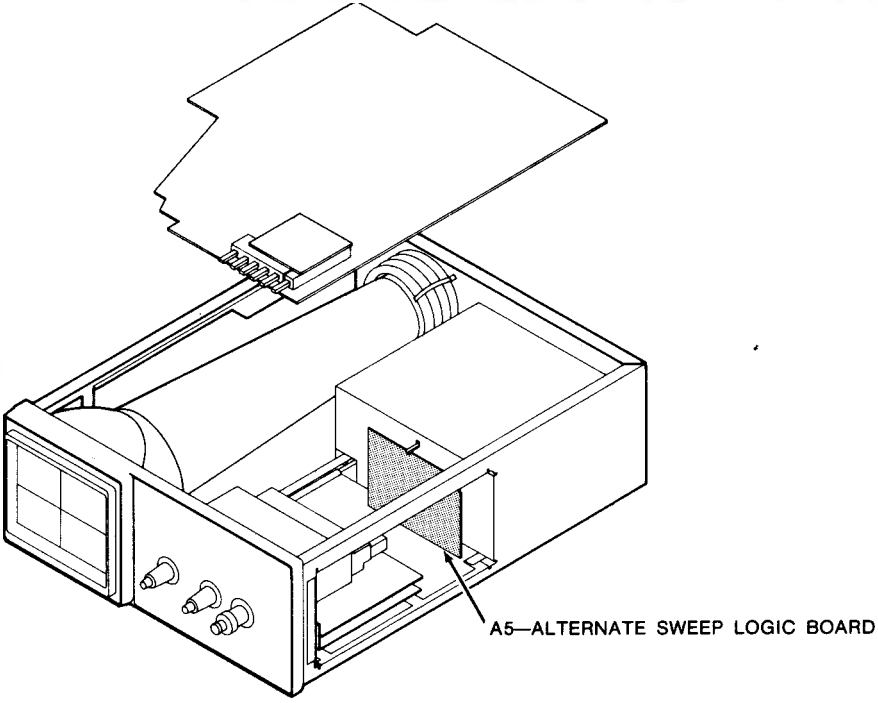

2236 CONTROL SETTINGS

DC Voltages

AC-GND-DC (both)	GND
A TRIGGER Mode	NORM (sweep not running)

AC Waveforms

VERTICAL MODE	CH 1
CH 1 VOLTS/DIV	5mV
AC-GND-DC (both)	DC
HORIZONTAL MODE	ALT
A SEC/DIV	50µs
B SEC/DIV	5µs
B DELAY TIME POSITION	5.0
B TRIGGER LEVEL	CW-RUN AFTER DELAY
A TRIGGER Mode	P-P AUTO
A&B INT	CH 1
A SOURCE	INT
CH 1 INPUT SIGNAL	5-div, 1-kHz sine wave

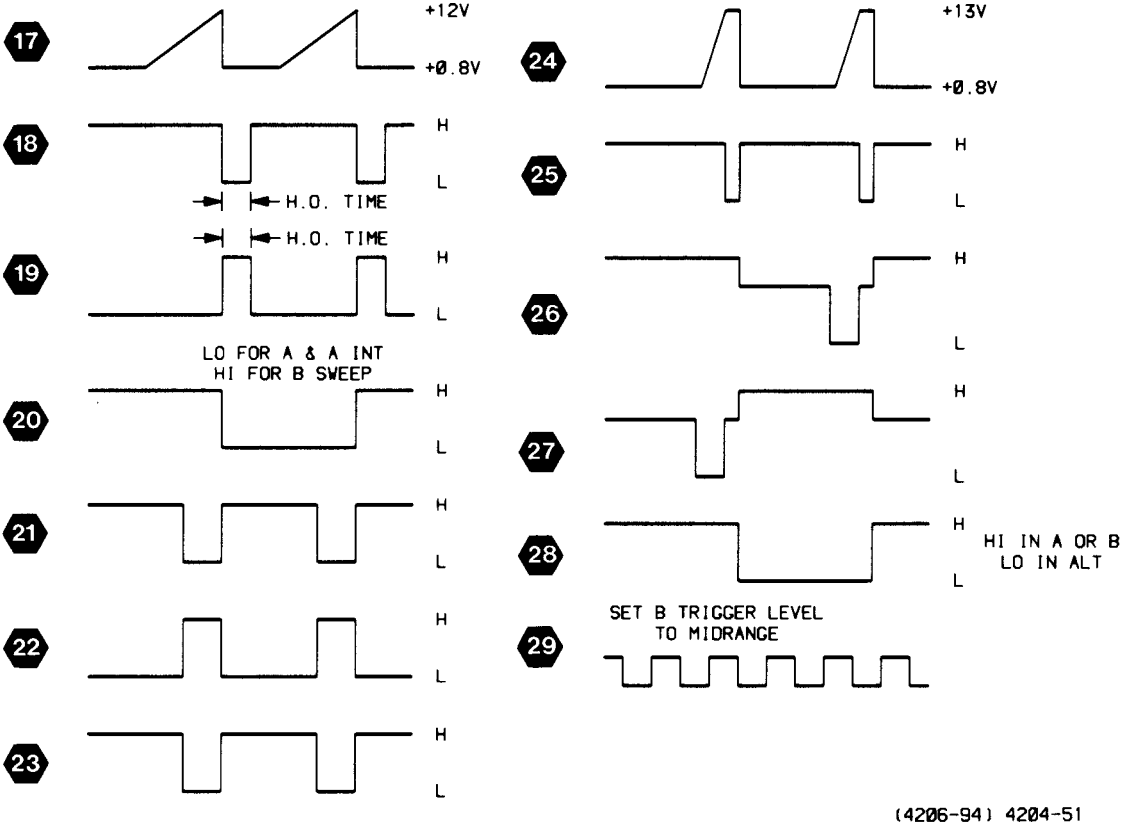

(4206-94) 4204-51

A5—ALTERNATE SWEEP BOARD

CIRCUIT NUMBER	SCHEM NUMBER	CIRCUIT NUMBER	SCHEM NUMBER	CIRCUIT NUMBER	SCHEM NUMBER	CIRCUIT NUMBER	SCHEM NUMBER
C610	5	R610	5	R672	5	W643	5
C624	5	R611	5	R674	5	W655	5
C627	5	R614	5	R677	5	W662	5
C643	5	R616	5	R679	5	W670	5
C655	5	R617	5	R690	5	W671	5
C659	5	R619	5	R693	5	W674	5
C661	5	R620	5	R816	5	W677	5
C665	5	R621	5	R817	5	W678	5
C667	5	R623	5	U605	5	W695	5
C671	5	R624	5	U605	5	W696	5
C672	5	R625	5	U605	5	W698	5
C690	5	R626	5	U605	5	W9401-10	5
C693	5	R627	5	U605	5	W9401-11	5
C694	5	R629	5	U605	5	W9401-12	5
CR680	5	R630	5	U625	5	W9401-13	5
CR685	5	R631	5	U625	5	W9401-14	5
CR816	5	R632	5	U625	5	W9401-15	5
CR817	5	R633	5	U625	5	W9401-16	5
L662	5	R634	5	U655	5	W9401-17	5
P2100-1	5	R635	5	U660	5	W9401-18	5
P2100-2	5	R637	5	U660	5	W9401-19	5
P2100-3	5	R638	5	U660	5	W9401-1	5
P2100-4	5	R640	5	U660	5	W9401-20	5
P2200-1	5	R642	5	U660	5	W9401-21	5
P2200-2	5	R643	5	U660	5	W9401-22	5
P2200-3	5	R644	5	U665	5	W9401-23	5
P2200-4	5	R651	5	U665	5	W9401-24	5
P2200-5	5	R652	5	U665	5	W9401-25	5
P2200-6	5	R653	5	U665	5	W9401-26	5
Q619	5	R657	5	U670	5	W9401-27	5
Q620	5	R660	5	U670	5	W9401-2	5
Q630	5	R661	5	U680	5	W9401-3	5
Q631	5	R662	5	U680	5	W9401-4	5
Q637	5	R663	5	U680	5	W9401-5	5
Q643	5	R664	5	U680	5	W9401-6	5
Q680	5	R665	5	VR624	5	W9401-7	5
Q685	5	R666	5	VR660	5	W9401-8	5
R604	5	R667	5	W637	5	W9401-9	5
R605	5	R670	5	W638	5		
R606	5	R671	5				
R609	5						

B TIMING & ALTERNATE B SWEEP

ASSEMBLY A1

CIRCUIT NUMBER	SCHEM LOCATION	BOARD LOCATION	CIRCUIT NUMBER	SCHEM LOCATION	BOARD LOCATION	CIRCUIT NUMBER	SCHEM LOCATION	BOARD LOCATION	CIRCUIT NUMBER	SCHEM LOCATION	BOARD LOCATION
C603	9F	5E	P9644-2	5E	8E	W635	2E	7F	W9400-19	2F	7E
C635	2F	7F	P9644-3	5E	8E	W648	1E	8E	W9400-1	9F	5E
C647	3E	6E				W649	2F	6E	W9400-20	5F	7E
C648	1F	6E	R645	4E	8E	W9001-13	2E	5A	W9400-21	1F	7E
C649	3F	6E	R646	5E	8D	W9001-15	1E	6A	W9400-22	6F	7E
C673	7F	7E	R648	1F	8D	W9001-16	9F	6A	W9400-2	9F	5E
			R649	2E	8D	W9001-26	2E	7A	W9400-4	9F	6E
CR712	6F	7E	R673	6F	7E	W9001-27	2E	7A	W9400-5	1S	6E
						W9001-28	9F	7A	W9400-6	2F	6E
P2300-1	2E	8E	VR645	5E	8D	W9400-10	2F	6E	W9400-7	2S	6E
P2300-2	1E	8E	VR712	6F	7E	W9400-11	2S	6E	W9700-3	6F	7E
P2300-3	5E	8E				W9400-12	2F	6E	W9700-9	6F	7E
P2300-4	5E	8E	W602	9F	6E	W9400-13	1F	6E			
P2300-5	5E	8E	W603	9F	6E	W9400-14	5F	7E			
P9644-1	4E	8E	W634	2E	8E	W9400-17	6F	7E			

Partial A1 also shown on diagrams 2, 3, 4, 6, 7 and 14.

B TIMING & ALTERNATE B SWEEP 5 (cont)

ASSEMBLY A3

CIRCUIT NUMBER	SCHEM LOCATION	BOARD LOCATION	CIRCUIT NUMBER	SCHEM LOCATION	BOARD LOCATION	CIRCUIT NUMBER	SCHEM LOCATION	BOARD LOCATION	CIRCUIT NUMBER	SCHEM LOCATION	BOARD LOCATION
R602	9E	1F	S648	2B	2D	W9000-15	1E	4C	W9000-27	2E	4D
						W9000-16	9E	4C	W9000-28	9E	4D
S602	8D	1E	W9000-13	2E	4B	W9000-26	2E	4D			

Partial A3 also shown on diagrams 1, 2, 3, 4, 6, 7 and 14.

ASSEMBLY A4

CIRCUIT NUMBER	SCHEM LOCATION	BOARD LOCATION	CIRCUIT NUMBER	SCHEM LOCATION	BOARD LOCATION	CIRCUIT NUMBER	SCHEM LOCATION	BOARD LOCATION	CIRCUIT NUMBER	SCHEM LOCATION	BOARD LOCATION
C701C	6C	2C	P9700-3	6E	1D	Q710B	7D	2C	R713	6D	2C
C701D	6D	2C	P9700-8	7E	1D	Q712	7E	1C			
C710	7D	2D	P9700-9	6E	1D				S701C	3B	3B
C712	7D	2C				R709	6C	2C			
C713	7D	2C	Q709	6D	1D	R710	7D	1C	W709	6E	1D
C714	7D	1C	Q710A	7D	1D	R711	6A	2C			

Partial A4 also shown on diagrams 3, 4 and 6.

ASSEMBLY A5

CIRCUIT NUMBER	SCHEM LOCATION	BOARD LOCATION	CIRCUIT NUMBER	SCHEM LOCATION	BOARD LOCATION	CIRCUIT NUMBER	SCHEM LOCATION	BOARD LOCATION	CIRCUIT NUMBER	SCHEM LOCATION	BOARD LOCATION
C610	9J	3A	R606	9G	3A	R672	6M	2C	W638	4H	2E
C624	3H	2A	R609	9J	3A	R674	2N	1B	W643	6L	2D
C627	7J	1A	R610	9J	3A	R677	1P	1B	W655	3H	3E
C643	6K	3E	R611	9J	3A	R679	5S	2D	W662	1K	1E
C655	6J	3C	R614	9H	3B	R690	4G	3B	W670	7J	3C
C659	4K	3D	R616	8G	2B	R693	3G	3E	W671*	1M	1C
C661*	2L	2E	R617	8G	3B	R816	4P	2C	W674	6N	1C
C665	5J	3C	R619	7H	2B	R817	4P	3C	W677	2P	3B
C667	5L	1B	R620	7J	2B				W678	2J	2E
C671	2M	2B	R621	7J	2A	U605A	8J	3A	W695	7P	1C
C672	7M	3C	R623	8J	2A	U605B	9J	3A	W696	7N	1D
C690	4H	3B	R624	3G	1A	U605C	8G	3A	W698	7N	1B
C693	4G	1E	R625	8J	2A	U605D	8H	3A	W9401-10	2G	4B
C694	4H	1B	R626	7K	1A	U605E	9H	3A	W9401-11	2S	4B
			R627	8J	1A	U605F	8H	3A	W9401-12	2G	4C
CR680	5P	2C	R629*	9N	2A	U625A	8K	2A	W9401-13	1G	4C
CR685	4P	2C	R630	7L	1A	U625B	8K	2A	W9401-14	5G	4C
CR816	4P	2C	R631	8L	1B	U625C	8J	2A	W9401-15	4G	4C
CR817	5P	3C	R632	5M	2B	U625D*	9N	2A	W9401-16	4G	4C
L662*	1K	2E	R633	7M	3B	U655	5J	3C	W9401-17	6G	4C
P2100-1	7S	1B	R634	7L	1B	U660A	9M	2D	W9401-18	4G	4C
P2100-2	7S	1B	R635	7N	1B	U660B	5M	2D	W9401-19	2G	4D
P2100-3	6S	1B	R637	9K	3B	U660C	4N	2D	W9401-1	9G	4A
P2100-4	6S	1B	R638	9L	2D	U660D	9L	2D	W9401-20	5G	4D
P2200-1	9S	2D	R640	9L	2D	U660E	2L	2D	W9401-21	1G	4D
P2200-2	9S	2D	R642	6K	3D	U660F	5L	2D	W9401-22	6G	4D
P2200-3	5S	2D	R643	6K	3E	U665A	5L	2C	W9401-23	4G	4D
P2200-4	9S	2D	R644	6L	3E	U665B	3P	2C	W9401-24	4G	4D
P2200-5	4M	2D	R651	5H	3D	U665C	2P	2C	W9401-25	4G	4D
P2200-6	2M	2D	R652	5H	3D	U665D	5N	2C	W9401-26	3G	4E
			R653	6H	3D	U670A	4M	2B	W9401-27	3G	4E
Q619	7H	2A	R657	4J	3D	U670B	1N	2B	W9401-2	9G	4A
Q620	7J	2A	R660	3J	3B	U680A	1M	2E	W9401-3	4G	4A
Q630	7L	2B	R661*	2L	1D	U680B	2L	2E	W9401-4	9G	4A
Q631	7L	1B	R662	4K	3D	U680C	5K	2E	W9401-5	1S	4A
Q637	9L	2D	R663	4J	3D	U680D	5K	2E	W9401-6	2G	4B
Q643	6L	3D	R664	5K	3E				W9401-7	2S	4B
Q680	5P	2C	R665	5J	3C	VR624	3G	2A	W9401-8	4P	4B
Q685	3P	2C	R666	2P	3C	VR660	4J	3C	W9401-9	5S	4B
			R667	5L	2C						
R604	9G	3A	R670	2K	1D	W637	2J	3C			
R605	8G	3A	R671	1M	1C						

CHASSIS MOUNTED PARTS

CIRCUIT NUMBER	SCHEM LOCATION	BOARD LOCATION	CIRCUIT NUMBER	SCHEM LOCATION	BOARD LOCATION	CIRCUIT NUMBER	SCHEM LOCATION	BOARD LOCATION	CIRCUIT NUMBER	SCHEM LOCATION	BOARD LOCATION
R9644	5D	CHASSIS									

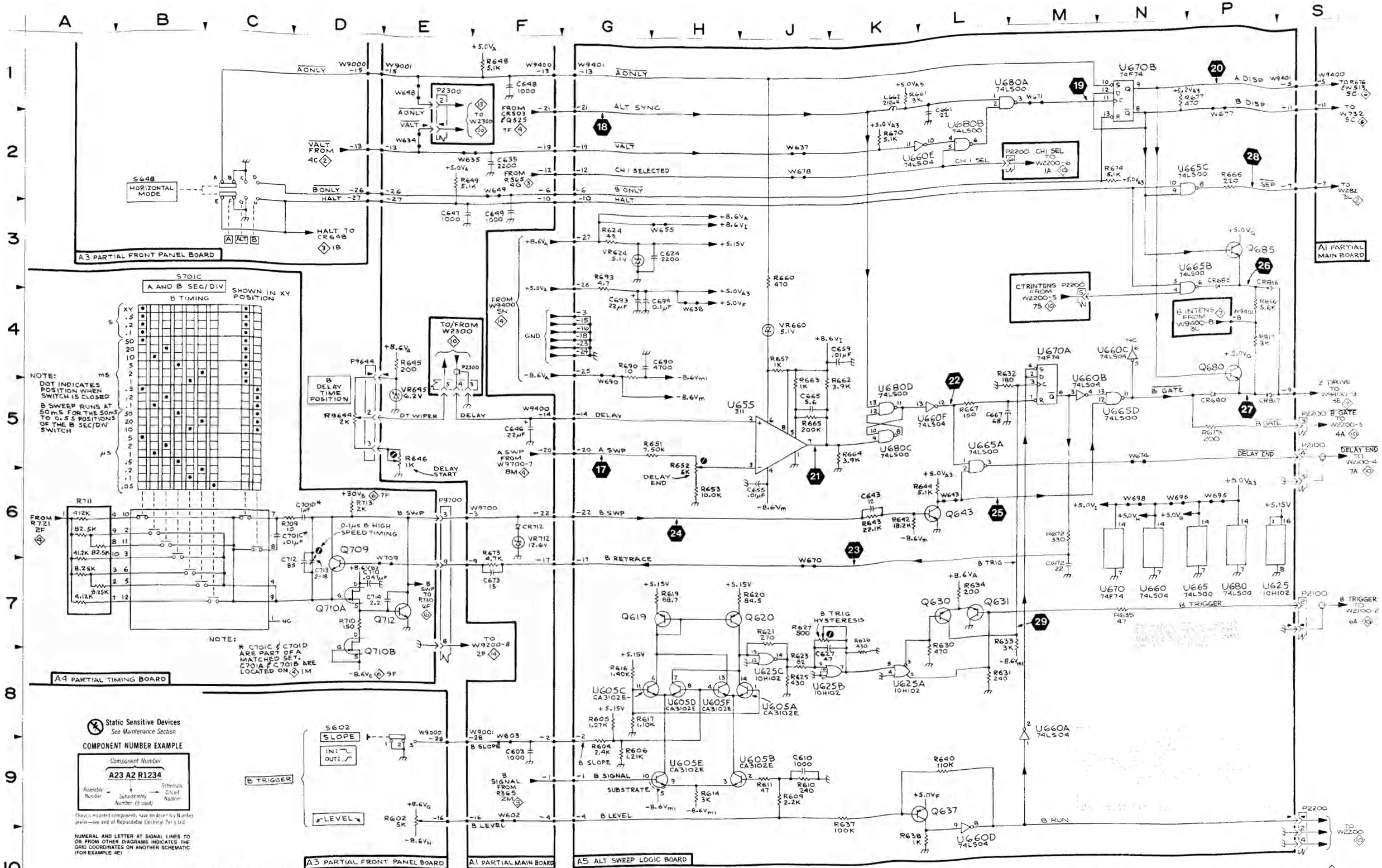
A3 PARTIAL FRONT PANEL BOARD
A4 PARTIAL TIMING BOARD
A1 PARTIAL MAIN BOARD
A5 ALT SWEEP LOGIC BOARD
S701C
A AND B SEC/DIV
B TIMING
SHOWN IN XY POSITION
NOTE:
DOT INDICATES POSITION WHEN SWITCH IS CLOSED
B SWEEP RUNS AT 50mS FOR THE 50mS TO 0.5S POSITIONS OF THE B SEC/DIV SWITCH
S648
HORIZONTAL MODE
HALT TO CR648
B DELAY TIME POSITION
TO/FROM W2300
DT WIPER
DELAY
DELAY START
DELAY END
A SWP
B SWP
B SLOPE
B SIGNAL
B LEVEL
B TRIGGER
B RETRACE
B RUN
B GATE
B DISP
A DISP
ALT SYNC
CH 1 SELECTED
HALT
SEP
DELAY END
Z DRIVE TO W9400-9 5E
B TRIGGER TO W2100-2 6A
TO W2200 6A
B TIMING & ALTERNATE B SWEEP
Static Sensitive Devices
See Maintenance Section
COMPONENT NUMBER EXAMPLE
A23 A2 R1234
Assembly Number
Subassembly Number (if used)
Schematic Circuit Number
Chassis mounted components have no Assembly Number prefix—see end of Replaceable Electrical Parts List
NUMERAL AND LETTER AT SIGNAL LINES TO OR FROM OTHER DIAGRAMS INDICATES THE GRID COORDINATES ON ANOTHER SCHEMATIC (FOR EXAMPLE: 4E)
2236
4204-11
REV APR 1986

2236 CONTROL SETTINGS

DC Voltages

AC-GND-DC (both)	GND
HORIZONTAL MODE	A
A TRIGGER Mode	P-P AUTO

AC Waveforms

AC-GND-DC (both)	GND
HORIZONTAL MODE	A
X10 Magnifier	Off (knob in)
VAR HOLDOFF	MIN (fully ccw)
A TRIGGER Mode	P-P AUTO

31

32

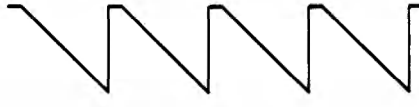

33

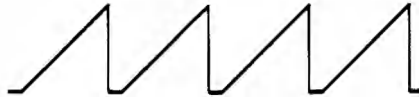

34

35

36

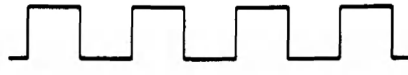

ASSEMBLY A1

CIRCUIT NUMBER	SCHEM LOCATION	BOARD LOCATION	CIRCUIT NUMBER	SCHEM LOCATION	BOARD LOCATION	CIRCUIT NUMBER	SCHEM LOCATION	BOARD LOCATION
			R566	5D	6E	R788	4S	2E
C764	6M	3G	R676	5C	6D	R789	4P	2E
C770	7M	3F	R756	4C	5D	R792	5P	3E
C775	8N	3F	R757	3C	5C	R793	6P	3F
C777	7S	3E	R758	4C	5D			
C779	7P	3F	R759	4C	5D	U758	4C	5D
C780	5N	3F	R760	4D	5E			
C782	5N	2F	R761	4C	5D	VR764	6L	2G
C785	4N	2F				VR782	5N	2F
C787	4P	2F	R764	6L	3G			
C789	3P	2F	R766	6M	3F	W570	5D	7E
			R768	6N	2F	W732	5C	6E
CR764	6L	2G	R770	7M	3F	W770	7L	4E
CR765	6M	3F	R773	8P	3F	W780	5L	4E
CR768	6M	3F	R775	8N	3F	W9778	8S	3E
CR770	6M	3G	R776	7P	3E	W9788	4S	2E
CR780	5L	3G	R777	6P	3F	W9001-21	3B	6A
			R778	8S	3E	W9700-1	5E	7E
Q756	4C	5D	R779	7P	3E	W9700-2	5E	7E
Q770	7M	3F	R780	5M	3F	W9705-2	5L	5E
Q775	8P	3E	R782	5N	2F	W9705-3	7L	5E
Q779	7P	3E	R783	5P	2F	W9705-5	4D	5E
Q780	5N	2F	R785	4N	2F			
Q785	5P	2F	R786	3P	2E			
Q789	4P	2F	R787	5P	2F			

Partial A1 also shown on diagrams 2, 3, 4, 5, 7 and 14.

ASSEMBLY A3

CIRCUIT NUMBER	SCHEM LOCATION	BOARD LOCATION	CIRCUIT NUMBER	SCHEM LOCATION	BOARD LOCATION	CIRCUIT NUMBER	SCHEM LOCATION	BOARD LOCATION
C987	2B	1D	R726	3B	1D	U985	2C	1D
			R985	2B	1D			
CR988	2C	1D	R986	1C	1D	W9900	2D	1A
CR989	2D	1D	R987	2C	1D	W9000-21	3B	4C
			R988	2C	1D			
J9250-1	3E	3D	R989	2D	2D			
			R990	2D	1B			

Partial A3 also shown on diagrams 1, 2, 3, 4, 5, 7 and 14.

ASSEMBLY A4

CIRCUIT NUMBER	SCHEM LOCATION	BOARD LOCATION	CIRCUIT NUMBER	SCHEM LOCATION	BOARD LOCATION	CIRCUIT NUMBER	SCHEM LOCATION	BOARD LOCATION
C707	8E	1B	P9705-6	9E	2A	R743	5G	2B
C724	8E	1B	P9705-7	8E	2A	R745	6G	2B
C728	3F	3B	P9705-8	8E	2A	R747	5G	1B
C749	2J	2B				R748	6J	2A
C750	8J	3A	Q732	6G	2B	R749	6J	1A
C751	3J	3B	Q737	7G	3B	R750	6J	2A
C752	6K	1B	Q742	5G	2B	R751	3J	2A
C755	4J	3A				R752	8F	1A
			R724	8F	1B	R753	4J	2A
CR732	5F	1C	R727	3F	4D	R754	4K	2A
CR742	5F	1C	R728	3F	4D	R755	4K	3A
			R730	6F	1B			
P9250-1	3E	3E	R731	6F	1C	S721	3J	3A
P9700-1	5E	1C	R732	6G	1B			
P9700-2	5E	1D	R733	7G	2B	U750	8H	2B
P9705-1	9E	2A	R737	7G	4C	U760	3H	2A
P9705-2	5K	2A	R738	7G	3B			
P9705-3	7K	2A	R740	4F	1B	VR746	5G	1B
P9705-4	9E	2A	R741	4F	1C	VR749	2J	2B
P9705-5	4E	2A	R742	4G	1B			

Partial A4 also shown on diagrams 3, 4 and 5.

CHASSIS MOUNTED PARTS

CIRCUIT NUMBER	SCHEM LOCATION	BOARD LOCATION	CIRCUIT NUMBER	SCHEM LOCATION	BOARD LOCATION	CIRCUIT NUMBER	SCHEM LOCATION	BOARD LOCATION
J9900	2E	CHASSIS						

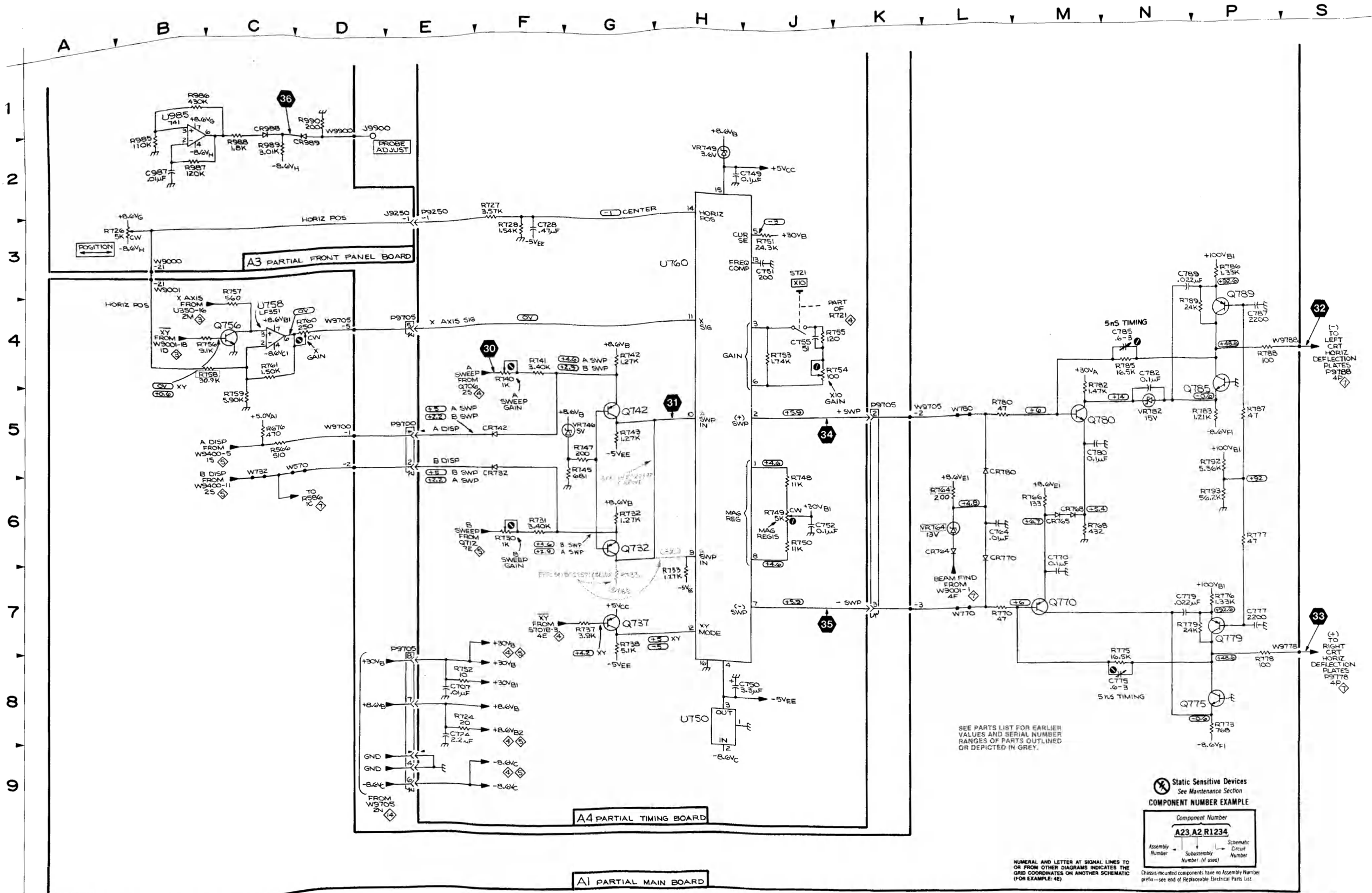

2236

4204-12
REV SEP 1986

PROBE ADJUST, XY AMPLIFIER & HORIZONTAL OUTPUT 6

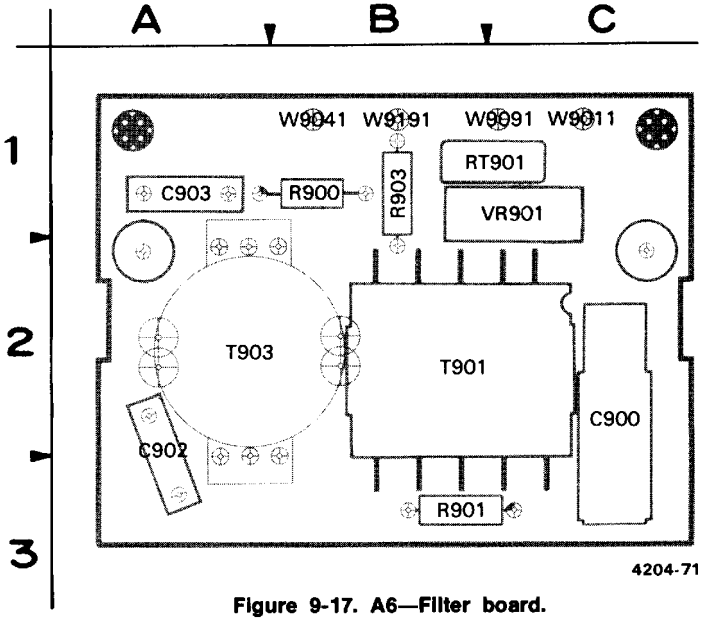

Figure 9-17. A6—Filter board.

A6—FILTER BOARD

CIRCUIT NUMBER	SCHEM NUMBER	CIRCUIT NUMBER	SCHEM NUMBER
C900	7	T901	7
C902	7	T903	7
C903	7	VR901	7
R900	7	W9011	7
R901	7	W9041	7
R903	7	W9091	7
RT901	7	W9191	7

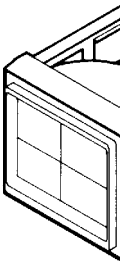

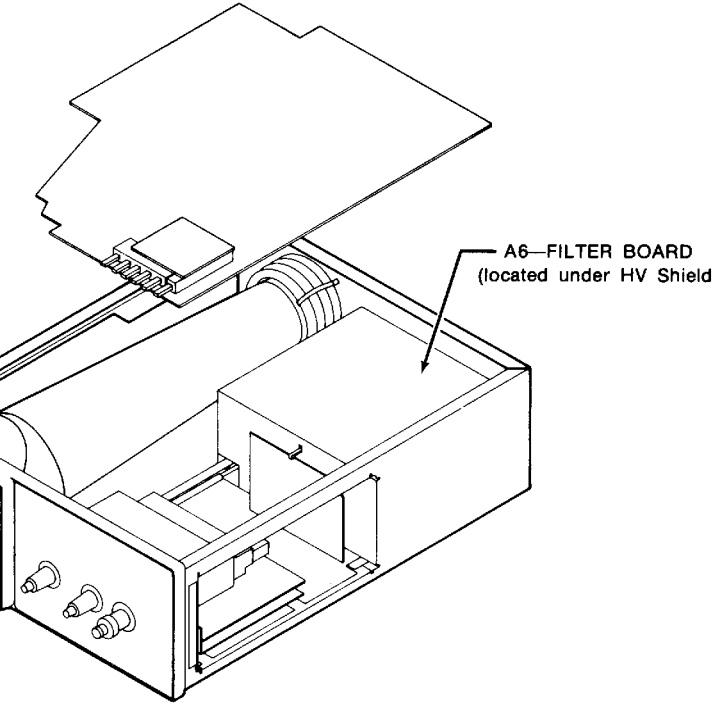
A6—FILTER BOARD
(located under HV Shield)

POWER SUPPLY WAVEFORMS

AC Waveforms

WARNING

Instrument must be connected to the ac-power source using a 1:1 isolation transformer. Do not connect the test oscilloscope probe ground lead to the inverter circuit test points if the instrument is not isolated AC-source voltage exists on reference points TP940 and TP950.

DC Voltages

Preregulator and inverter voltages are referenced to test point noted adjacent to the voltage. Power supply output voltages are referenced to chassis ground.

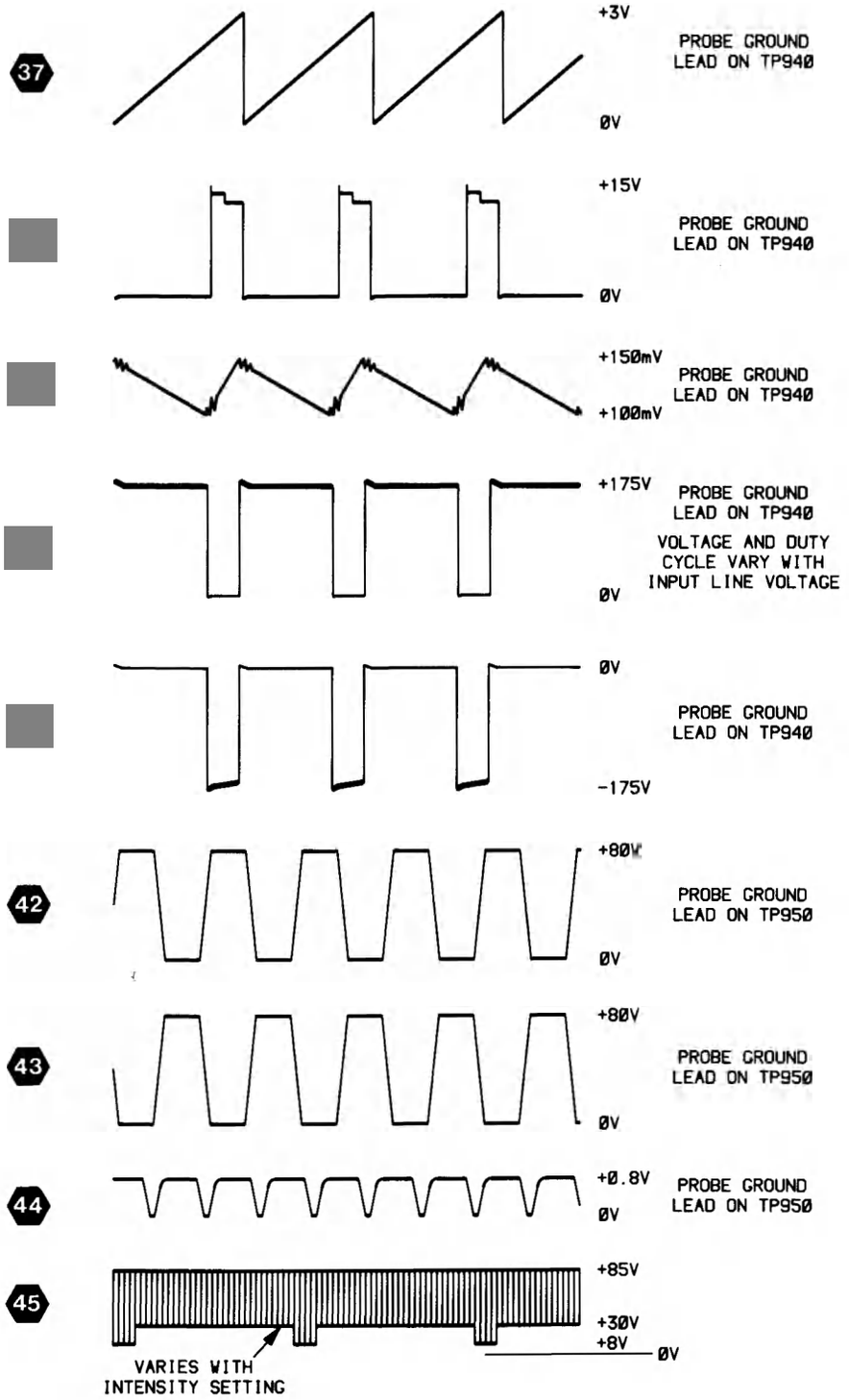

2236 CONTROL SETTINGS

AC Waveforms

VERTICAL MODE	CH 1
CH 1 VOLTS/DIV	5mV
AC-GND-DC	DC
HORIZONTAL MODE	ALT
A SEC/DIV	50µs
B SEC/DIV	5µs
B DELAY TIME POSITION	5.0
B TRIGGER LEVEL	RUN AFTER DELAY-CW
A TRIGGER Mode	P-P AUTO
A&B INT	CH 1
A SOURCE	INT
CH 1 INPUT SIGNAL	1-kHz sine wave, 5 div.

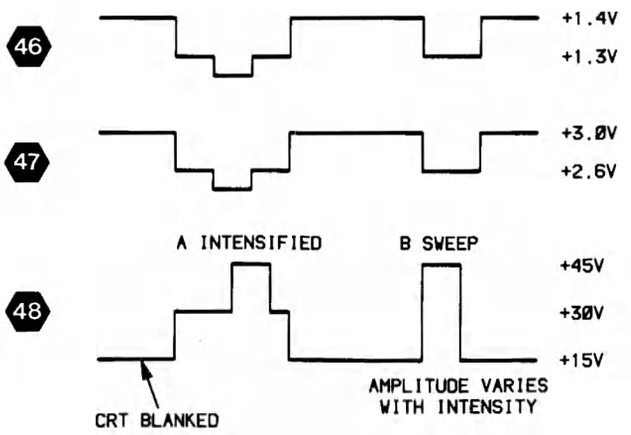

4204-61

ASSEMBLY A1

CIRCUIT NUMBER	SCHEM LOCATION	BOARD LOCATION	CIRCUIT NUMBER	SCHEM LOCATION	BOARD LOCATION	CIRCUIT NUMBER	SCHEM LOCATION	BOARD LOCATION	CIRCUIT NUMBER	SCHEM LOCATION	BOARD LOCATION
C396	6D	4H	CR904	5E	5J	R804	2B	4B	R928	6F	7J
C824	3E	6E	CR907	7J	6H	R805	2B	5B	R929	6F	7J
C825	3F	3H	CR908	8H	7J	R810	3B	4B	R930	6F	7J
C828	4F	3H	CR920	6J	7J	R814	3B	4B	R934	9C	8J
C832	2G	3H	CR945*	9F	8H	R818	1D	6E	R935	9C	8J
C835	4H	3J	CR946	9J	8H	R820	2D	6E	R937	9C	8H
C845	3H	3J	CR947	9J	8H	R822	4E	2J	R938	9C	8J
C847	3J	3J	CR954	6K	6F	R823	3E	2J	R939	9C	8H
C849	3J	3J	CR955	7K	6F	R825	3E	3J	R940	9C	8H
C851	7M	6H	CR956	7K	6F	R826	3E	2J	R941	9E	8J
C853	7M	6G	CR957	7K	6F	R828	4F	2G	R942	9D	8J
C854	6M	5G	CR960	8K	7F	R830	3G	2J	R943	9E	8J
C855	3M	5G	CR961	9K	8F	R832	3G	3J	R944	9F	8J
C871	4S	1H	CR962	9K	7F	R834	4H	3J	R945	9F	8H
C873	5S	1H	CR963	9K	8F	R835	4G	3J	R946	9H	8H
C875	6S	1H	CR965	8L	8G	R836	4G	3J	R947	9H	7H
C877	7S	1H	CR967	9K	8G	R840	4H	3J	R949	9H	8H
C879	8N	5H	CR970	9K	8G	R841	3G	3J	R965	8L	8G
C893	7N	4G				R842	3J	3J	R976	4L	5G
C904	5D	4J	DS856	5M	5G	R844	3H	3J	R978	4L	5G
C906	5F	5H	DS858	5M	5G	R845	3H	3J			
C907	7J	6J	DS870	8L	5G	R849	3J	3J	S901	5D	4J
C908	6H	5J				R851	7M	4J			
C917	8D	7H	E907	8H	6H	R852	7M	4J	T390	6D	4H
C919	8F	8J				R853	7M	6G	T906	6J	6J
C922	7F	7J	L968	9L	8G	R854	6M	5G	T944	9H	7H
C925	6E	8J				R858	6M	5G	T948	4J	6G
C940	9G	6H	P2700-1	9N	6F	R860	4M	5G			
C941	9G	6H	P2700-2	9N	6F	R870	4S	1H	TP842	3J	3J
C942	9D	8H	P2700-3	9N	6F	R871	4S	1H	TP900	9L	8E
C943	9C	8H	P9802-1	3B	4B	R872	5S	1H	TP940	9D	8J
C944	9F	7H	P9802-2	3B	4B	R873	4S	1G	TP950	9C	7H
C945	9F	8J	P9802-3	2B	4B	R874	6S	1G			
C954	6K	6F	P9802-4	3B	4B	R875	6S	1G	U930	9G	7J
C956	7K	6F	P9802-5	2B	4B	R877	7S	1H	U975	4K	5F
C960	9L	6F	P9965-1	9N	7G	R879	8N	6F			
C961	9L	8F	P9965-2	9N	7G	R885	1K	4H	VR828	4F	3H
C965	8L	7G				R886	2L	4G	VR925	7F	7J
C968	9L	8G	Q583	1C	6E	R888	1L	4G	VR935	9C	8J
C970	9L	8G	Q586	1D	6D	R889	1M	4G	VR943	9E	8J
C975	5L	5G	Q804	2B	5B	R890	1M	4G			
C976	5L	5G	Q814	3C	5B	R891	1M	4G	W9040	5D	5J
C979	5M	5G	Q825	3F	3J	R892	6N	4F	W9190	5D	5H
			Q829	3G	3J	R893	6N	4F	W9800	4B	3J
CR551	2C	6D	Q835	4H	3J	R894	6M	5F	W9001-1	4F	4A
CR805	2C	5B	Q840	4J	3J	R905	6D	4J	W9070-1	8H	6H
CR818	1D	6E	Q845	3J	3J	R906	6D	5J	W9070-2	7H	6H
CR820	2D	6E	Q885	1L	4G	R907	9J	6H	W9070-3	8H	7H
CR823	3E	3J	Q908	8H	7H	R908	8H	7J	W9150-1	7B	5A
CR824	2F	2J	Q928	6F	7J	R910	7B	5A	W9150-2	8B	5A
CR825	3G	3J	Q930	6G	7J	R912	9C	7J	W9400-8	3C	6E
CR829	3G	3J	Q935	9B	8J	R913	8C	7J	W9400-9	3E	6E
CR840	4H	3J	Q938	9D	8J	R914	8D	7H	W9870-10	4S	1H
CR845	3H	3J	Q939	9E	8J	R915	8D	7J	W9870-12	3N	4G
CR851	7M	6G	Q944	9F	8J	R916	8F	7J	W9870-14	8N	4G
CR853	6M	6H	Q946	9H	8H	R917	8D	7H	W9870-1	8N	4G
CR854	5M	5G	Q947	9H	7H	R919	8F	8J	W9870-2	8N	4G
CR855	5M	5G				R921	8E	7J	W9870-3	7N	4G
CR879	8M	6G	R397	6D	5E	R922	8F	7J	W9870-4	7N	4G
CR901	5E	5J	R398	6D	5E	R925	6F	7J	W9870-5	6S	1H
CR902	5E	5J	R583*	1C	7E	R926	5E	7J	W9870-7	5S	1H
CR903	5E	5J	R586	1C	6E	R927	7F	7J	W9870-8	7S	1H
			R800	2B	4B						

Partial A1 also shown on diagrams 2, 3, 4, 5, 6 and 14.

POWER SUPPLY, Z AXIS & CRT 7 (cont)

ASSEMBLY A3

CIRCUIT NUMBER	SCHEM LOCATION	BOARD LOCATION	CIRCUIT NUMBER	SCHEM LOCATION	BOARD LOCATION	CIRCUIT NUMBER	SCHEM LOCATION	BOARD LOCATION	CIRCUIT NUMBER	SCHEM LOCATION	BOARD LOCATION
P9006-1	3S	2A	R982	3S	2A	S390	4E	2A			
P9006-2	3S	2A	R983	3S	2A	W9000-1	4F	4A			

Partial A3 also shown on diagrams 1, 2, 3, 4, 5, 6 and 14.

ASSEMBLY A6

CIRCUIT NUMBER	SCHEM LOCATION	BOARD LOCATION	CIRCUIT NUMBER	SCHEM LOCATION	BOARD LOCATION	CIRCUIT NUMBER	SCHEM LOCATION	BOARD LOCATION	CIRCUIT NUMBER	SCHEM LOCATION	BOARD LOCATION
C900	5B	2C	R901	5B	3B	T901	5B	2B	W9011	5A	1C
C902	5C	2A	R903	5C	1B	T903	5C	2A	W9041	5C	1B
C903	5C	1A							W9091	5A	1C
			RT901	5B	1B	VR901	5B	1C	W9191	5C	1B
R900	5C	1B									

CHASSIS MOUNTED PARTS

CIRCUIT NUMBER	SCHEM LOCATION	BOARD LOCATION	CIRCUIT NUMBER	SCHEM LOCATION	BOARD LOCATION	CIRCUIT NUMBER	SCHEM LOCATION	BOARD LOCATION	CIRCUIT NUMBER	SCHEM LOCATION	BOARD LOCATION
B9965	9N	CHASSIS	P9272	5P	CHASSIS	P9870-14	8P	CHASSIS	Q9070	8J	CHASSIS
			P9273	5P	CHASSIS	P9870-1	8P	CHASSIS	R909	8H	CHASSIS
DS9150	8A	CHASSIS	P9778	4P	CHASSIS	P9870-2	8N	CHASSIS	R9802A	2A	CHASSIS
			P9788	4P	CHASSIS	P9870-3	7N	CHASSIS	R9802B	3A	CHASSIS
F9001	5A	CHASSIS	P9070-1	8J	CHASSIS	P9870-4	7N	CHASSIS			
			P9070-2	8J	CHASSIS	P9870-5	6P	CHASSIS	V9870	2P	CHASSIS
FL9001	5A	CHASSIS	P9070-3	8J	CHASSIS	P9870-7	5P	CHASSIS			
			P9870-10	4P	CHASSIS	P9870-8	7P	CHASSIS			
J9800	4A	CHASSIS	P9870-12	3N	CHASSIS						

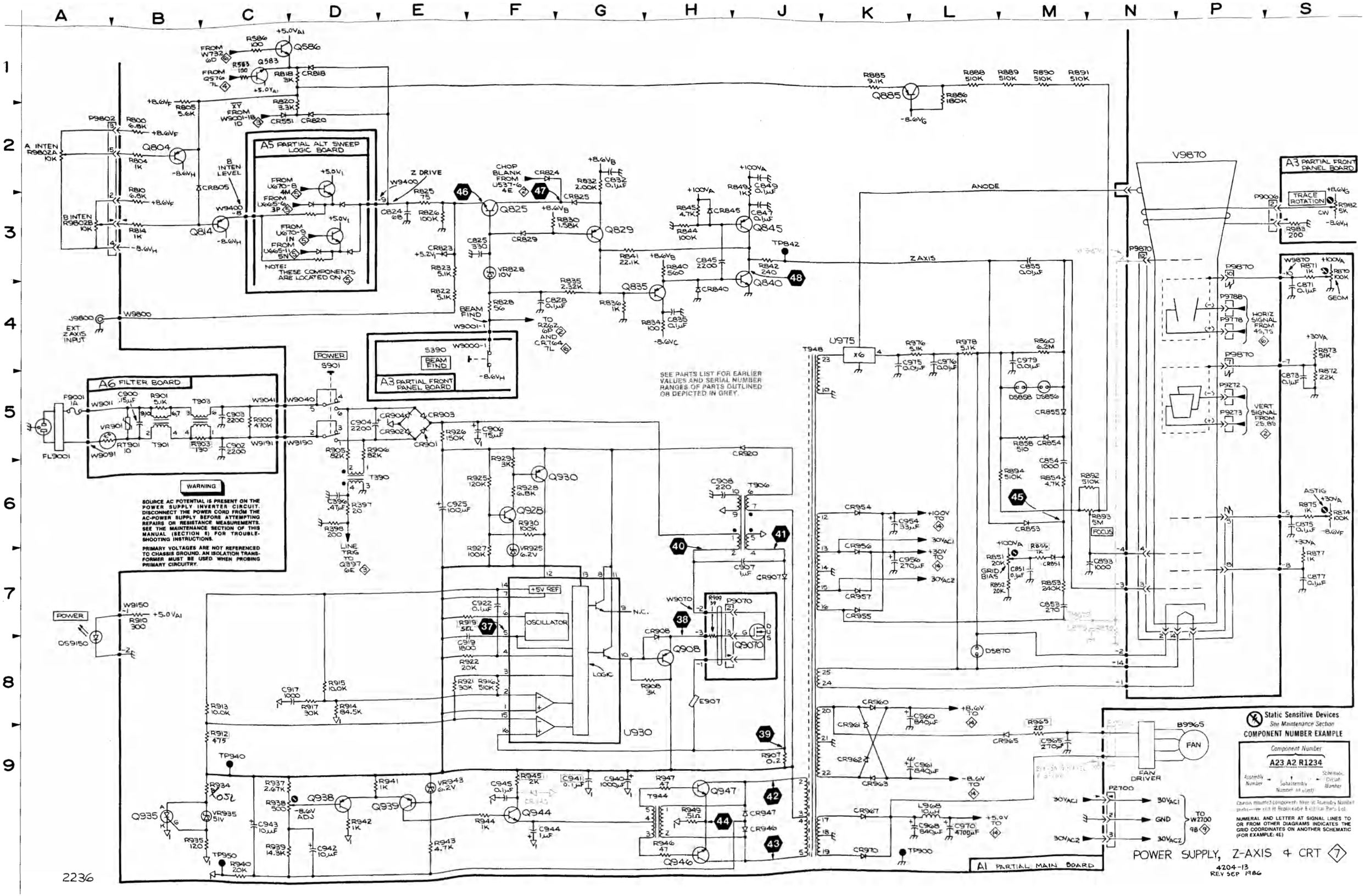
A5 PARTIAL ALT SWEEP LOGIC BOARD
A6 FILTER BOARD
A3 PARTIAL FRONT PANEL BOARD
A1 PARTIAL MAIN BOARD
V9870
U930
U975
Q825
Q829
Q835
Q840
Q845
Q930
Q938
Q939
Q944
Q946
Q947
Q908
Q9070
Z DRIVE
ANODE
Z AXIS
BEAM FIND
CHOP BLANK
TRACE ROTATION
HORIZ SIGNAL FROM 45,75
VERT SIGNAL FROM 25,89
FOCUS
GEOM
ASTIG
GRID BIAS
OSCILLATOR
LOGIC
FAN
FAN DRIVER
POWER
EXT Z AXIS INPUT
LINE TRIG TO Q397 6E
WARNING
SOURCE AC POTENTIAL IS PRESENT ON THE POWER SUPPLY INVERTER CIRCUIT. DISCONNECT THE POWER CORD FROM THE AC-POWER SUPPLY BEFORE ATTEMPTING REPAIRS OR RESISTANCE MEASUREMENTS. SEE THE MAINTENANCE SECTION OF THIS MANUAL (SECTION 8) FOR TROUBLE-SHOOTING INSTRUCTIONS.
PRIMARY VOLTAGES ARE NOT REFERENCED TO CHASSIS GROUND. AN ISOLATION TRANSFORMER MUST BE USED WHEN PROBING PRIMARY CIRCUITRY.
SEE PARTS LIST FOR EARLIER VALUES AND SERIAL NUMBER RANGES OF PARTS OUTLINED OR DEPICTED IN GREY.
Static Sensitive Devices
See Maintenance Section
COMPONENT NUMBER EXAMPLE
Component Number
A23 A2 R1234
Assembly Number
Subassembly Number (if used)
Schematic Circuit Number
NUMERAL AND LETTER AT SIGNAL LINES TO OR FROM OTHER DIAGRAMS INDICATES THE GRID COORDINATES ON ANOTHER SCHEMATIC (FOR EXAMPLE: 4E)
POWER SUPPLY, Z-AXIS & CRT 7
4204-13
REV SEP 1986
2236

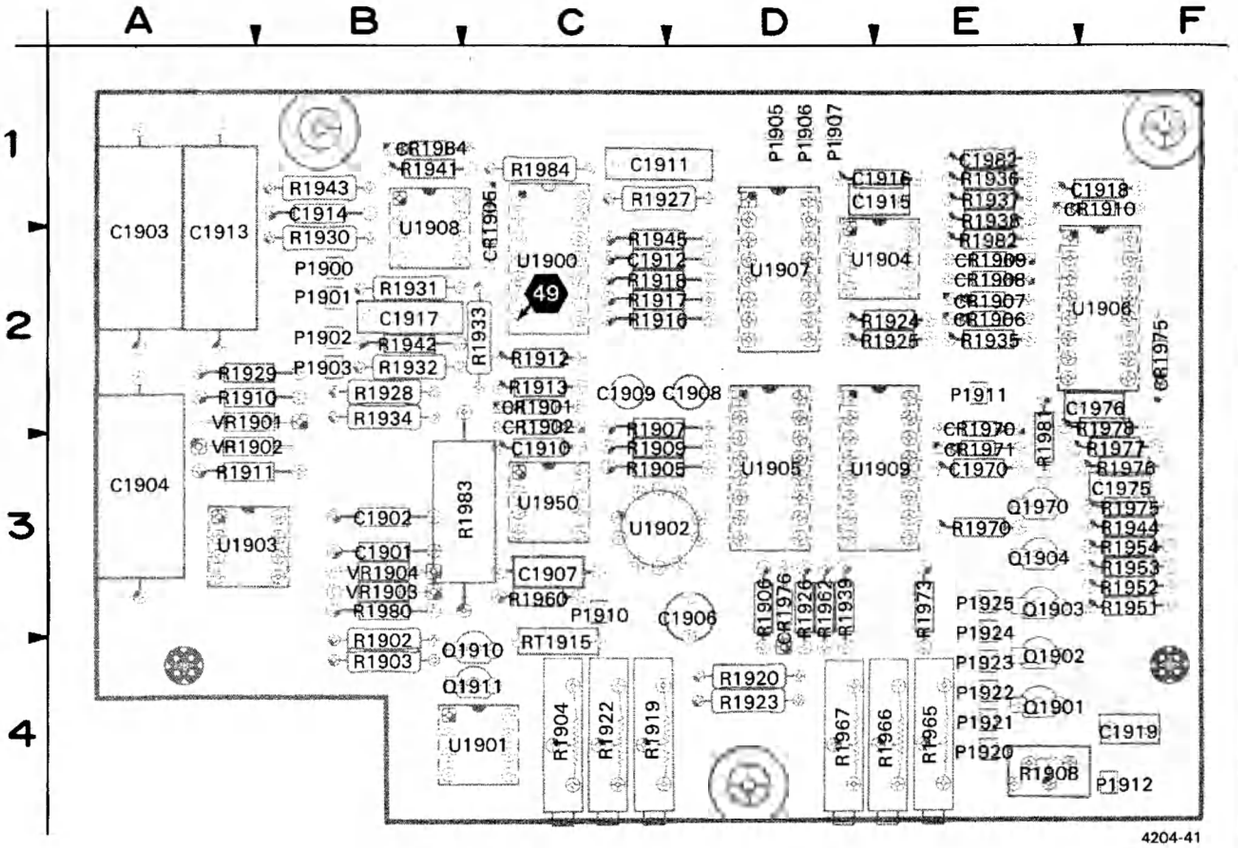

Figure 9-18. A12—Multimeter Control board.

A12—MULTIMETER CONTROL BOARD

CIRCUIT NUMBER	SCHEM NUMBER	CIRCUIT NUMBER	SCHEM NUMBER	CIRCUIT NUMBER	SCHEM NUMBER	CIRCUIT NUMBER	SCHEM NUMBER
C1901	8	P1901	8	R1918	8	R1973	8
C1902	8	P1902	8	R1919	8	R1975	8
C1903	8	P1903	8	R1920	8	R1976	8
C1904	8	P1905	8	R1922	8	R1977	8
C1906	8	P1906	8	R1923	8	R1978	8
C1907	8	P1907	8	R1924	8	R1980	8
C1908	8	P1910	8	R1925	8	R1981	8
1909	8	P1911	8	R1926	8	R1982	8
C1910	8	P1912	8	R1927	8	R1983	8
C1911	8	P1920	8	R1928	8	R1984	8
C1912	8	P1921	8	R1929	8	RT1915	8
C1913	8	P1922	8	R1930	8	U1900	8
C1914	8	P1923	8	R1931	8	U1900	8
C1915	8	P1924	8	R1932	8	U1900	8
C1916	8	P1925	8	R1933	8	U1900	8
C1917	8	Q1901	8	R1934	8	U1901	8
C1918	8	Q1902	8	R1935	8	U1902	8
C1919	8	Q1903	8	R1936	8	U1903	8
C1970	8	Q1904	8	R1937	8	U1904	8
C1975	8	Q1910	8	R1938	8	U1905	8
C1976	8	Q1911	8	R1939	8	U1906	8
C1982	8	Q1970	8	R1941	8	U1907	8
CR1901	8	R1902	8	R1942	8	U1907	8
CR1902	8	R1903	8	R1943	8	U1907	8
CR1905	8	R1904	8	R1944	8	U1908	8
CR1906	8	R1905	8	R1945	8	U1909	8
CR1907	8	R1906	8	R1951	8	U1909	8
CR1908	8	R1907	8	R1952	8	U1909	8
CR1909	8	R1908	8	R1953	8	U1950	8
CR1910	8	R1909	8	R1954	8	VR1901	8
CR1970	8	R1910	8	R1960	8	VR1902	8
CR1971	8	R1911	8	R1962	8	VR1903	8
CR1975	8	R1912	8	R1965	8	VR1904	8
CR1976	8	R1913	8	R1966	8		
CR1984	8	R1916	8	R1967	8		
P1900	8	R1917	8	R1970	8		

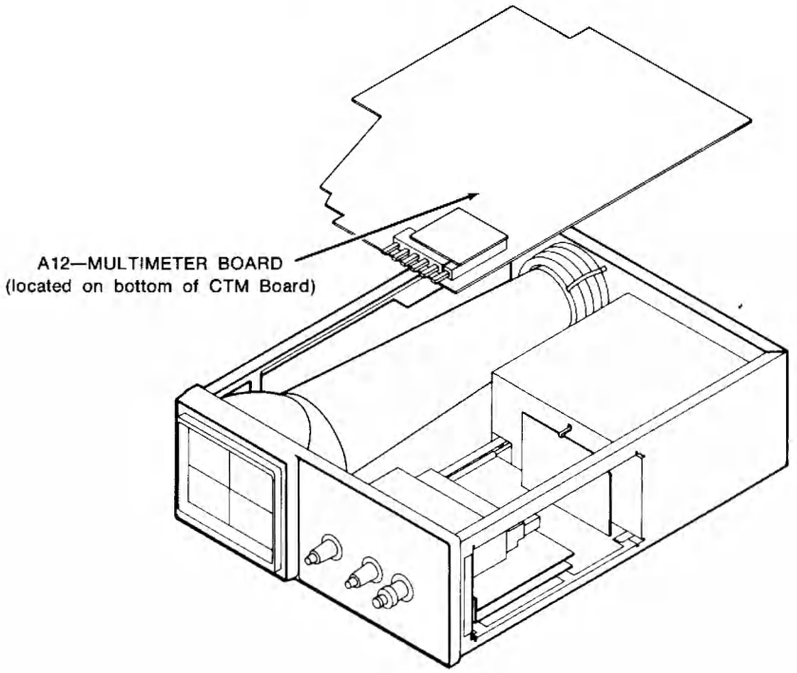

2236 CONTROL SETTINGS

DC VOLTAGES & AC WAVEFORMS

UPPER FUNCTIONS-
LOWER FUNCTIONS IN
Function Select DCV

4204-62

DMM LOGIC & A/D CONVERTOR

8

ASSEMBLY A12

CIRCUIT NUMBER	SCHEM LOCATION	BOARD LOCATION	CIRCUIT NUMBER	SCHEM LOCATION	BOARD LOCATION	CIRCUIT NUMBER	SCHEM LOCATION	BOARD LOCATION	CIRCUIT NUMBER	SCHEM LOCATION	BOARD LOCATION
C1901	8B	3B	P1900	8A	2B	R1916	4K	2C	R1970	3C	3E
C1902	9B	3B	P1901	9A	2B	R1917	4L	2C	R1973	3B	3E
C1903	8B	2A	P1902	9A	2B	R1918	4M	2C	R1975	8N	3F
C1904	9B	3A	P1903	9A	2B	R1919	2E	4C	R1976	8M	3F
C1906	4C	3D	P1905	2S	1D	R1920	2E	4D	R1977	8M	3F
C1907	4D	3C	P1906	8A	1D	R1922	2F	4C	R1978	8M	2F
C1908	5E	2D	P1907	7A	1D	R1923	3F	4D	R1980	8L	3B
C1909	4E	2C	P1910	6S	3C	R1924	6G	2E	R1981	8N	3E
C1910	6K	3C	P1911	7S	2E	R1925	6H	2E	R1982	7C	2E
C1911	3L	1C	P1912	1A	4F	R1926	2B	3D	R1983	6K	3C
C1912	5M	2C	P1920	8S	4E	R1927	2J	1C	R1984	2L	1C
C1913	2N	2A	P1921	1S	4E	R1928	2J	2B			
C1914	2N	1B	P1922	9S	4E	R1929	2N	2A	RT1915	6K	4C
C1915	5H	1E	P1923	9S	4E	R1930	2N	2B			
C1916	5H	1E	P1924	9S	3E	R1931	2L	2B	U1900A	2K	2C
C1917	2M	2B	P1925	9S	3E	R1932	3L	2B	U1900B	2M	2C
C1918	7B	1F				R1933	1J	2C	U1900C	5M	2C
C1919*	8P	4F	Q1901	9P	4E	R1934	1J	2B	U1900D	2H	2C
C1970	3C	3E	Q1902	9P	4E	R1935	4F	2E	U1901	4B	4C
C1975	8N	3F	Q1903	9P	3E	R1936	7B	1E	U1902	4D	3C
C1976	8M	2F	Q1904	9P	3E	R1937	7B	1E	U1903	2D	3A
C1982	7C	1E	Q1910	8K	4C	R1938	8B	1E	U1904	5H	2E
			Q1911	8L	4C	R1939	8E	3D	U1905	2G	3D
CR1901	6J	2C	Q1970	8M	3E	R1941	2P	1B	U1906	7D	2F
CR1902	7J	2C				R1942	2N	2B	U1907A	3D	2D
CR1905	2L	1C	R1902	4B	4B	R1943	2N	1B	U1907B	4L	2D
CR1906	4F	2E	R1903	4B	4B	R1944	8P	3F	U1907C	4M	2D
CR1907	4F	2E	R1904	4C	4C	R1945	5L	2C	U1908	2P	2B
CR1908	6F	2E	R1905	4E	3C	R1951	9N	3F	U1909A	7G	3E
CR1909	6F	2E	R1906	4D	3D	R1952	9N	3F	U1909B	7G	3E
CR1910*	7C	1F	R1907	5D	2C	R1953	8N	3F	U1909C	6G	3E
CR1970	7M	2E	R1908	4C	4E	R1954	8P	3F	U1950	7K	3C
CR1971	7M	3E	R1909	4E	3C	R1960	6K	3C			
CR1975	9J	2F	R1910	8B	2A	R1962	6F	3D	VR1901	8B	2A
CR1976	1B	3D	R1911	9B	3A	R1965	6G	4E	VR1902	9B	3A
CR1984	2K	1B	R1912	3K	2C	R1966	7G	4E	VR1903	7K	3B
			R1913	5J	2C	R1967	8G	4D	VR1904	7K	3B

***See Parts List for serial number ranges**

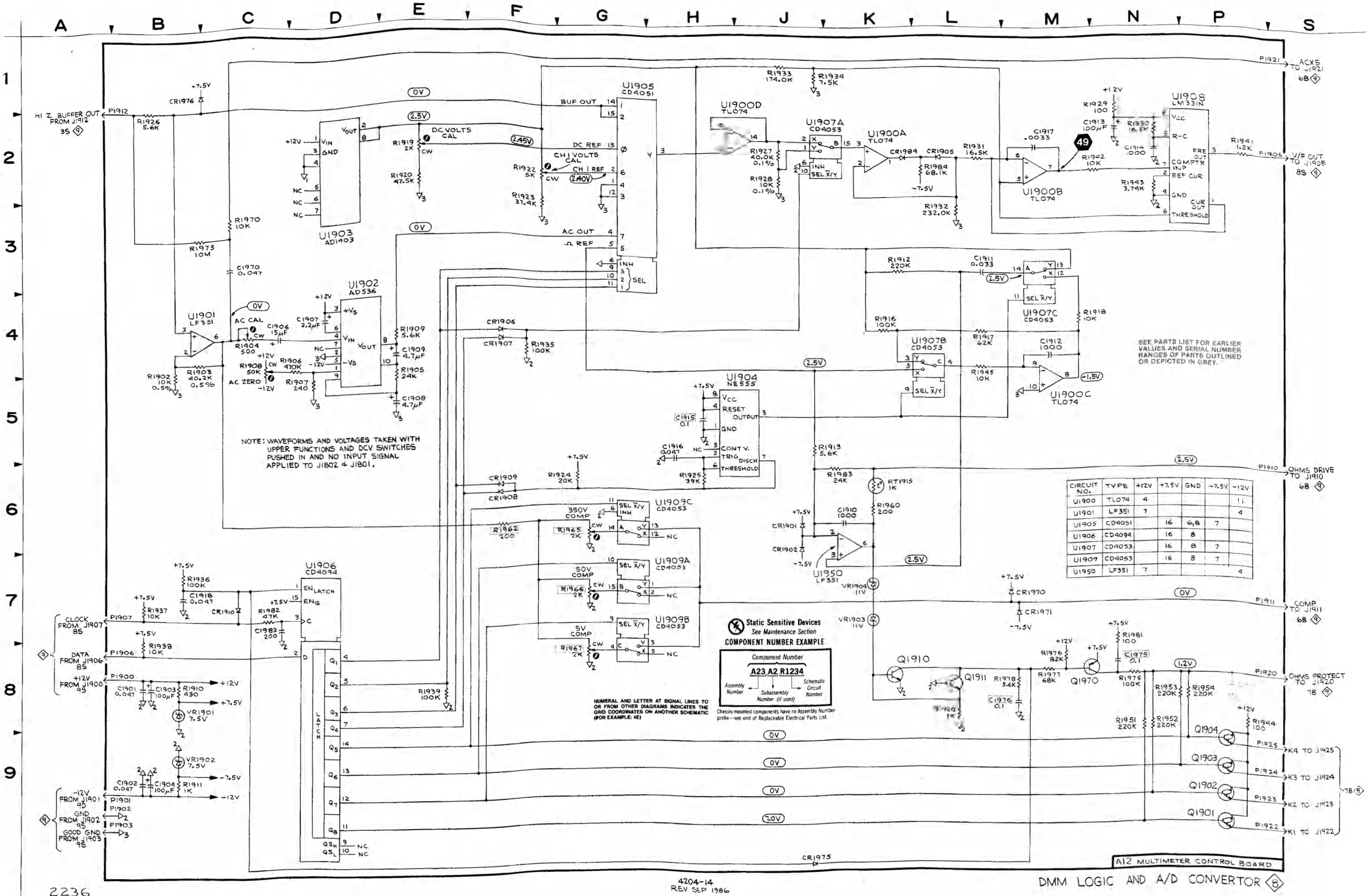

CIRCUIT NO.	TYPE	+12V	+7.5V	GND	-7.5V	-12V
U1900	TL074	4				11
U1901	LF351	7				4
U1905	CD4051		16	6,8	7	
U1906	CD4094		16	8		
U1907	CD4053		16	8	7	
U1909	CD4053		16	8	7	
U1950	LF351	7				4

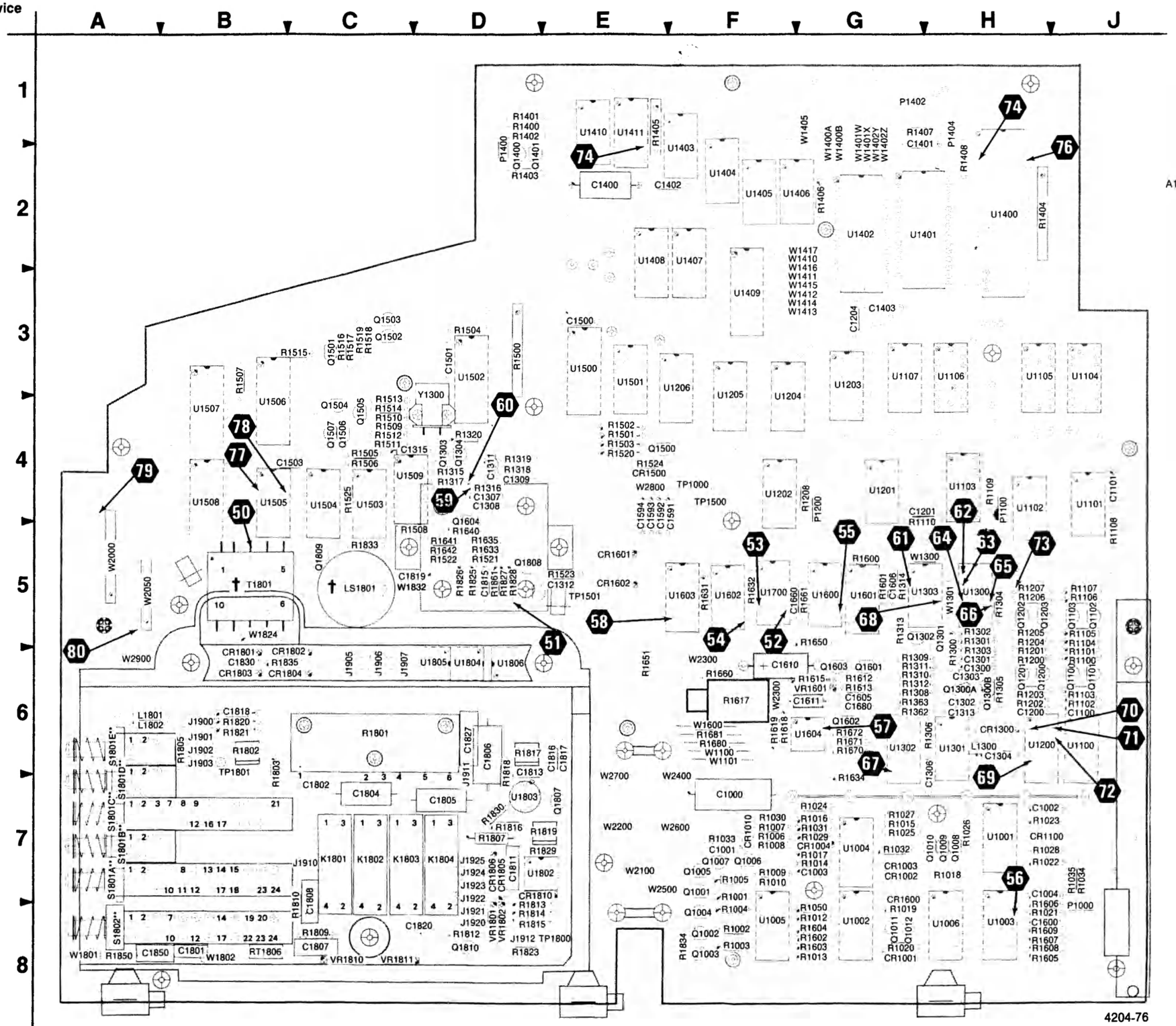

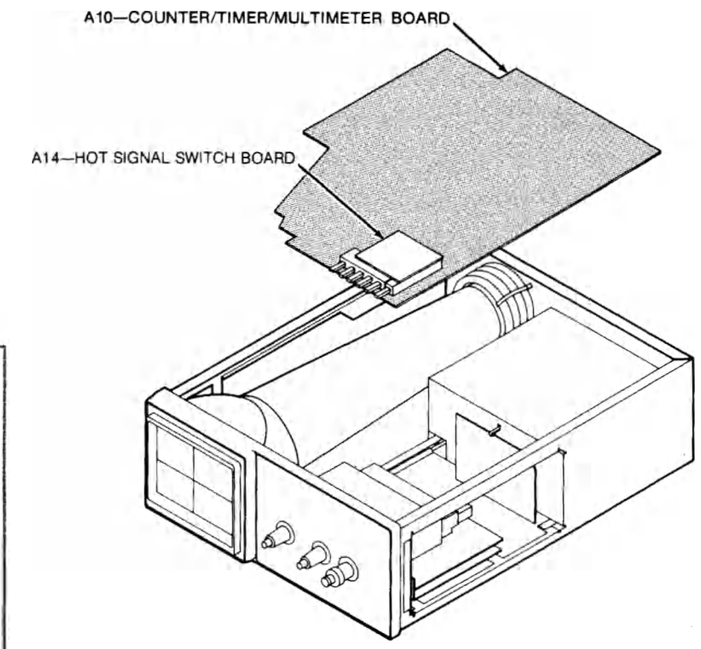

**A14—Hot Signal Switch board.

† These components are located on the reverse side of the circuit board.

COMPONENT NUMBER EXAMPLE

Component Number: A23 A2 R1234

Assembly Number — Subassembly Number (if used) — Schematic Circuit Number

Chassis mounted components have no Assembly Number prefix—see end of Replaceable Electrical Parts List.

Static Sensitive Devices
See Maintenance Section

Fig. 9-19. A10—Counter/Timer/Multimeter board (SN B014070 & Above).

A10—COUNTER/TIMER/MULTIMETER BOARD
(SN B014070 & ABOVE)

CIRCUIT NUMBER	SCHEM NUMBER	CIRCUIT NUMBER	SCHEM NUMBER	CIRCUIT NUMBER	SCHEM NUMBER	CIRCUIT NUMBER	SCHEM NUMBER	CIRCUIT NUMBER	SCHEM NUMBER	CIRCUIT NUMBER	SCHEM NUMBER
C1000	10	CR1810	9	Q1807	9	R1317	10	R1803	9	U1405	12
C1001	10			Q1808	9	R1318	10	R1805	9	U1406	12
C1002	10	J1900	9	Q1809	13	R1319	10	R1807	9	U1407	12
C1003	10	J1901	9	Q1810	9	R1320	10	R1809	9	U1408	12
C1004	10	J1902	9			R1362	10	R1810	9	U1409	12
C1100	11	J1903	9	R1001	10	R1363	10	R1812	9	U1410	12
C1101	11	J1905	9	R1002	10	R1400	12	R1813	9	U1411	12
C1200	11	J1906	9	R1003	10	R1401	12	R1814	9	U1500	13
C1201	11	J1907	9	R1004	10	R1402	12	R1815	9	U1501	13
C1204	11	J1910	9	R1005	10	R1403	12	R1816	9	U1502	13
C1300	10	J1911	9	R1006	10	R1404	12	R1817	9	U1503	13
C1301	10	J1912	9	R1007	10	R1405	12	R1818	9	U1504	13
C1302	10	J1920	9	R1008	10	R1406	12	R1819	9	U1505	13
C1303	10	J1921	9	R1009	10	R1407	12	R1820	9	U1506	13
C1304	10	J1922	9	R1010	10	R1408	12	R1821	9	U1507	13
C1306	10	J1923	9	R1012	10	R1500	13	R1823	9	U1508	13
C1307	10	J1924	9	R1013	10	R1501	13	R1825	9	U1509	10
C1308	10	J1925	9	R1014	10	R1502	13	R1826	9	U1509	13
C1309	10			R1015	10	R1503	13	R1827	9	U1600	10
C1311	10	K1801	9	R1016	10	R1504	13	R1828	9	U1601	10
C1313	10	K1802	9	R1017	10	R1505	13	R1829	9	U1602	10
C1315	10	K1803	9	R1018	10	R1506	13	R1830	9	U1603	10
C1400	12	K1804	9	R1019	10	R1507	13	R1833	13	U1604	10
C1401	12			R1020	10	R1508	13	R1834	9	U1700	10
C1402	12	L1300	10	R1021	10	R1509	13	R1835	9	U1802	9
C1403	12	L1801	9	R1022	10	R1510	13	R1850	9	U1803	9
C1500	13	L1802	9	R1023	10	R1511	13	R1861	9	U1804	9
C1501	13			R1024	10	R1512	13			U1805	9
C1503	13	LS1801	13	R1025	10	R1513	13	RT1806	9	U1806	9
C1591	13			R1026	10	R1514	13				
C1592	13	P1000	10	R1027	10	R1515	13	S1801A	9	VR1601	10
C1593	13	P1100	11	R1028	10	R1516	13	S1801B	9	VR1801	9
C1594	13	P1200	11	R1029	10	R1517	13	S1801C	9	VR1802	9
C1600	10	P1400	12	R1030	10	R1518	13	S1801D	9	VR1810	9
C1605	10	P1402	12	R1031	10	R1519	13	S1801E	9	VR1811	9
C1606	10	P1404	12	R1032	10	R1520	13	S1802	9		
C1610	10			R1033	10	R1521	13			W1100	14
C1611	10	Q1001	10	R1034	10	R1522	13	T1801	9	W1101	14
C1660	10	Q1002	10	R1035	10	R1523	13			W1300	10
C1680	10	Q1003	10	R1050	10	R1524	13	TP1000	13	W1301	10
C1801	9	Q1004	10	R1100	11	R1525	13	TP1500	13	W1400	12
C1802	9	Q1005	10	R1101	11	R1600	10	TP1501	13	W1401	12
C1804	9	Q1006	10	R1102	11	R1601	10	TP1800	9	W1402	12
C1805	9	Q1007	10	R1103	11	R1602	10	TP1801	9	W1405	12
C1806	9	Q1008	10	R1104	11	R1603	10			W1410	12
C1807	9	Q1009	10	R1105	11	R1604	10	U1001	10	W1411	12
C1808	9	Q1010	10	R1106	11	R1605	10	U1002	10	W1412	12
C1811	9	Q1011	10	R1107	11	R1606	10	U1003	10	W1413	12
C1813	9	Q1012	10	R1108	11	R1607	10	U1004	10	W1414	12
C1815	9	Q1100	11	R1109	11	R1608	10	U1005	10	W1415	12
C1816	9	Q1101	11	R1110	11	R1609	10	U1006	10	W1416	12
C1817	9	Q1102	11	R1200	11	R1612	10	U1006	11	W1417	12
C1818	9	Q1103	11	R1201	11	R1613	10	U1100	11	W1600	14
C1819	13	Q1200	11	R1202	11	R1615	10	U1101	11	W1801	9
C1820	9	Q1201	11	R1203	11	R1617	10	U1102	11	W1802	9
C1827	9	Q1202	11	R1204	11	R1618	10	U1103	11	W1824	9
C1830	9	Q1203	11	R1205	11	R1619	10	U1104	11	W1832	13
C1850	9	Q1300	10	R1206	11	R1631	10	U1105	11	W2000	13
		Q1301	10	R1207	11	R1632	10	U1106	11	W2050	13
CR1001	10	Q1302	10	R1208	11	R1633	10	U1107	11	W2100	10
CR1002	10	Q1303	10	R1300	10	R1634	10	U1200	11	W2200	10
CR1003	10	Q1304	10	R1301	10	R1635	10	U1201	11	W2200	11
CR1004	10	Q1400	12	R1302	10	R1640	10	U1202	11	W2300	10
CR1010	10	Q1401	12	R1303	10	R1641	10	U1203	11	W2300	13
CR1100	11	Q1500	13	R1304	10	R1642	10	U1204	11	W2400	14
CR1300	10	Q1501	13	R1305	10	R1650	10	U1205	11	W2500	10
CR1500	13	Q1502	13	R1306	10	R1651	10	U1206	11	W2600	10
CR1600	10	Q1503	13	R1308	10	R1660	10	U1300	10	W2700	9
CR1601	10	Q1504	13	R1309	10	R1661	10	U1301	10	W2800	13
CR1602	10	Q1505	13	R1310	10	R1670	10	U1302	10	W2900	9
CR1801	9	Q1506	13	R1311	10	R1671	10	U1303	10		
CR1802	9	Q1507	13	R1312	10	R1672	10	U1400	12	Y1300	10
CR1803	9	Q1601	10	R1313	10	R1680	14	U1401	12		
CR1804	9	Q1602	10	R1314	10	R1681	14	U1402	12		
CR1805	9	Q1603	10	R1315	10	R1801	9	U1403	12		
CR1806	9	Q1604	10	R1316	10	R1802	9	U1404	12		

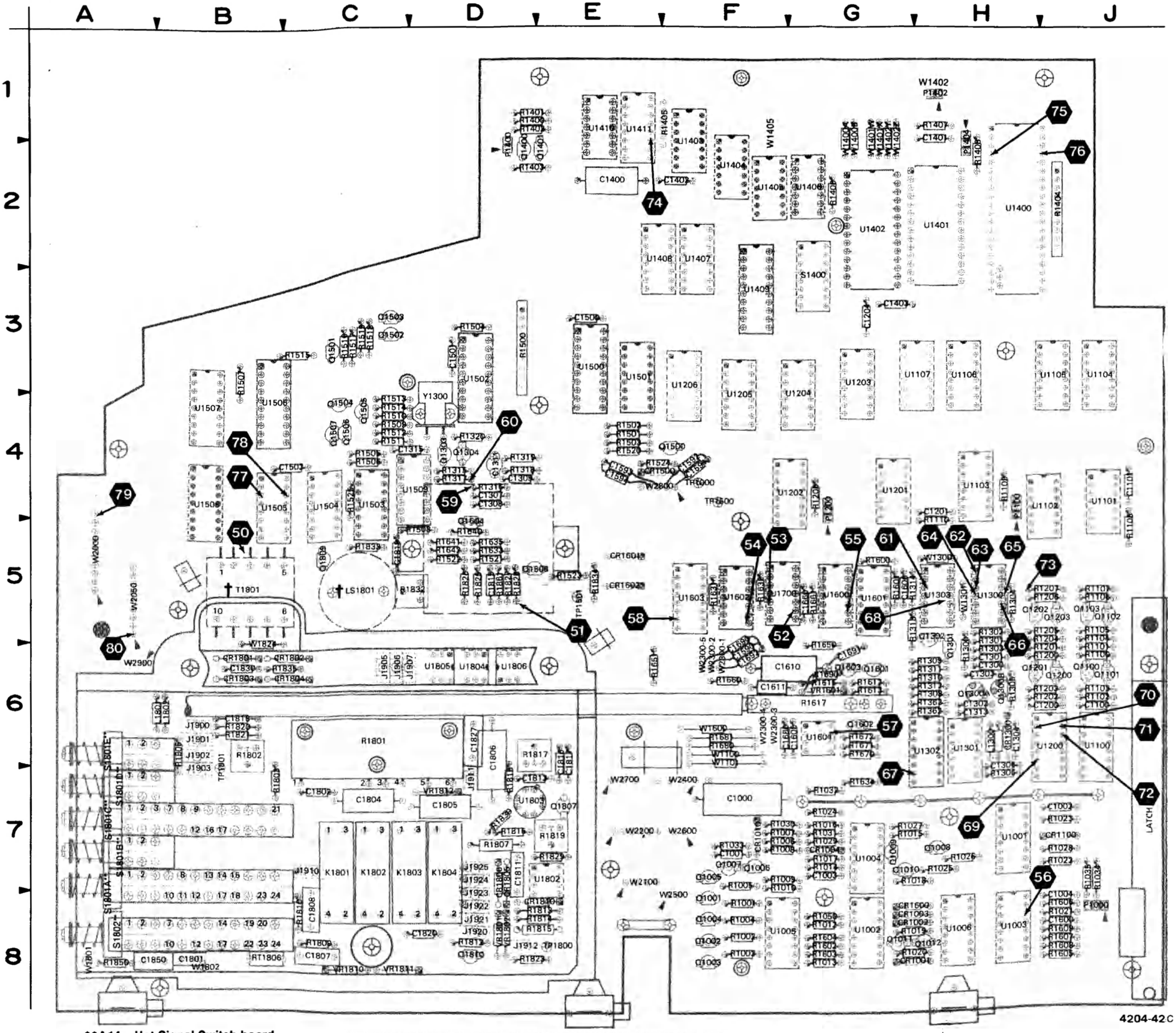

**A14—Hot Signal Switch board.

† These components are located on the reverse side of the circuit board.

Fig. 9-20. A10—Counter/Timer/Multimeter board (SN B014069 & Below).

A10—COUNTER/TIMER/MULTIMETER BOARD
(SN B014069 & BELOW)

CIRCUIT NUMBER	SCHEM NUMBER	BOARD LOCATION	CIRCUIT NUMBER	SCHEM NUMBER	BOARD LOCATION	CIRCUIT NUMBER	SCHEM NUMBER	BOARD LOCATION	CIRCUIT NUMBER	SCHEM NUMBER	BOARD LOCATION	CIRCUIT NUMBER	SCHEM NUMBER	BOARD LOCATION	CIRCUIT NUMBER	SCHEM NUMBER	BOARD LOCATION
C1000	10	7F	CR1804	9	6C	Q1602	10	6G	R1314	10	5G	R1681	14	6F	U1401	12	2G
C1001	10	7F	CR1805	9	7D	Q1603	10	6G	R1315	10	4D	R1690	10	6G	U1402	12	2G
C1002	10	7H	CR1806	9	7D	Q1604	10	5D	R1316	10	4D	R1801	9	6C	U1403	12	2F
C1003	10	7G	CR1810	9	7D	Q1807	9	7E	R1317	10	4D	R1802	9	6B	U1404	12	2F
C1004	10	7H				Q1808	9	5D	R1318	10	4D	R1803	9	6B	U1405	12	2F
C1100	11	6J	1900	9	6B	Q1809	13	5C	R1319	10	4D	R1805	9	6B	U1406	12	2F
C1101	11	4J	J1901	9	6B	Q1810	9	8D	R1320	10	4D	R1807	9	7D	U1407	12	2F
C1200	11	6H	J1902	9	6B				R1362	10	6G	R1809	9	8C	U1408	12	2E
C1201	11	4H	J1903	9	6B	R1001	10	7F	R1363	10	6G	R1810	9	8C	U1409	12	3F
C1204	11	3G	J1905	9	6C	R1002	10	8F	R1400	12	1D	R1812	9	8D	U1410	12	1E
C1300	10	6H	J1906	9	6C	R1003	10	8F	R1401	12	1D	R1813	9	8D	U1411	12	1E
C1301	10	6H	J1907	9	6C	R1004	10	8F	R1402	12	1D	R1814	9	8D	U1500	13	3E
C1302	10	6H	J1910	9	7C	R1005	10	7F	R1403	12	2D	R1815	9	8D	U1501	13	3E
C1303	10	6H	J1911	9	7D	R1006	10	7F	R1404	12	2H	R1816	9	7D	U1502	13	3D
C1304	10	6H	J1912	9	8D	R1007	10	7F	R1405	12	1E	R1817	9	6D	U1503	13	4C
C1306	10	7H	J1920	9	8D	R1008	10	7F	R1406	12	2G	R1818	9	6D	U1504	13	4C
C1307	10	4D	J1921	9	8D	R1009	10	7F	R1407	12	1G	R1819	9	7E	U1505	13	4B
C1308	10	4D	J1922	9	7D	R1010	10	7F	R1408	12	2H	R1820	9	6B	U1506	13	4B
C1309	10	4D	J1923	9	7D	R1012	10	8G	R1500	13	3D	R1821	9	6B	U1507	13	4B
C1311	10	4D	J1924	9	7D	R1013	10	8G	R1501	13	4E	R1823	9	8D	U1508	13	4B
C1313	10	6H	J1925	9	7D	R1014	10	7G	R1502	13	4E	R1825	9	5D	U1509	10	4D
C1315	10	4D				R1015	10	7G	R1503	13	4E	R1826	9	5D	U1509	13	4D
C1400	12	2E	K1801	9	7C	R1016	10	7G	R1504	13	3D	R1827	9	5D	U1600	10	5G
C1401	12	2G	K1802	9	7C	R1017	10	7G	R1505	13	4C	R1828	9	5D	U1601	10	5G
C1402	12	2F	K1803	9	7C	R1018	10	7H	R1506	13	4C	R1829	9	7E	U1602	10	5F
C1403	12	3G	K1804	9	7D	R1019	10	8G	R1507	13	3B	R1830	9	7D	U1603	10	5F
C1500	13	3E				R1020	10	8G	R1508	13	5D	R1833	13	5C	U1604	10	6G
C1501	13	3D	L1300	10	6H	R1021	10	8H	R1509	13	4C	R1834	9	5E	U1700	10	5F
C1503	13	4C	L1801	9	6A	R1022	10	7H	R1510	13	4C	R1835	9	6B	U1802	9	7D
C1591	13	4F	L1802	9	6A	R1023	10	7H	R1511	13	4C	R1850	9	8A	U1803	9	7D
C1592	13	4E				R1024	10	7G	R1512	13	4C	R1861	9	5D	U1804	9	6D
C1593	13	4E	LS1801	13	5C	R1025	10	7G	R1513	13	4C				U1805	9	6D
C1594	13	4E				R1026	10	7H	R1514	13	4C	RT1806	9	8B	U1806	9	6D
C1600	10	8H	P1000	10	8J	R1027	10	7G	R1515	13	3C						
C1605	10	6G	P1100	11	4H	R1028	10	7H	R1516	13	3C	S1801A	9	7A	VR1601	10	6G
C1606	10	5G	P1200	11	4G	R1029	10	7G	R1517	13	3C	S1801B	9	7A	VR1801	9	8D
C1610	10	6F	P1400	12	2D	R1030	10	7F	R1518	13	3C	S1801C	9	7A	VR1802	9	8D
C1611	10	6G	P1402	12	1G	R1031	10	7G	R1519	13	3C	S1801D	9	7A	VR1810	9	8C
C1660	10	5F	P1404	12	1H	R1032	10	7G	R1520	13	4E	S1801E	9	6A	VR1811	9	8C
C1680	10	6F				R1033	10	7F	R1521	13	5D	S1802	9	8A			
C1690	3B	6F	Q1001	10	7F	R1034	10	7J	R1522	13	5D				W1100	14	6F
C1691	3S	6G	Q1002	10	8F	R1035	10	7J	R1523	13	5E	T1801	9	5B	W1101	14	6F
C1692	1B	6F	Q1003	10	8F	R1050	10	8G	R1524	13	4E				W1300	10	5H
C1801	9	8B	Q1004	10	8F	R1100	11	6J	R1525	13	4C	TP1000	13	4F	W1301	10	5H
C1802	9	7C	Q1005	10	7F	R1101	11	6J	R1600	10	5G	TP1500	13	4F	W1400	12	1G
C1804	9	7C	Q1006	10	7F	R1102	11	6J	R1601	10	5G	TP1501	13	5E	W1401	12	1G
C1805	9	7D	Q1007	10	7F	R1103	11	6J	R1602	10	8G	TP1800	9	8E	W1402	12	1G
C1806	9	6D	Q1008	10	7H	R1104	11	5J	R1603	10	8G	TP1801	9	6B	W1405	12	1F
C1807	9	8C	Q1009	10	7G	R1105	11	5J	R1604	10	8G				W1410	12	2G
C1808	9	8C	Q1010	10	7G	R1106	11	5J	R1605	10	8H	U1001	10	7H	W1411	12	3G
C1811	9	7D	Q1011	10	8G	R1107	11	5J	R1606	10	8H	U1002	10	8G	W1412	12	3G
C1813	9	6D	Q1012	10	8G	R1108	11	5J	R1607	10	8H	U1003	10	8H	W1413	12	3G
C1815	9	5D	Q1100	11	6J	R1109	11	4H	R1608	10	8H	U1004	10	7G	W1414	12	3G
C1816	9	6E	Q1101	11	6J	R1110	11	5H	R1609	10	8H	U1005	10	8F	W1415	12	3G
C1817	9	6E	Q1102	11	5J	R1200	11	6H	R1612	10	6G	U1006	10	8H	W1416	12	2G
C1818	9	6B	Q1103	11	5J	R1201	11	6H	R1613	10	6G	U1006	11	3H	W1417	12	2G
C1819	13	5C	Q1200	11	6H	R1202	11	6H	R1615	10	6G	U1100	11	6J	W1600	14	6F
C1820	9	8D	Q1201	11	6H	R1203	11	6H	R1617	10	6F	U1101	11	4J	W1801	9	8A
C1827	9	6D	Q1202	11	5H	R1204	11	5H	R1618	10	6F	U1102	11	4H	W1802	9	8A
C1830	9	6B	Q1203	11	5J	R1205	11	5H	R1619	10	6F	U1103	11	4H	W1824	9	5B
C1850	9	8A	Q1300	10	6H	R1206	11	5H	R1631	10	5F	U1104	11	3J	W2000	13	5A
			Q1301	10	5H	R1207	11	5H	R1632	10	5F	U1105	11	3H	W2050	13	5A
CR1001	10	8G	Q1302	10	5G	R1208	11	4G	R1633	10	5D	U1106	11	3H	W2100	10	7E
CR1002	10	7G	Q1303	10	4D	R1300	10	6H	R1634	10	7G	U1107	11	3G	W2200	10	7E
CR1003	10	7G	Q1304	10	4D	R1301	10	5H	R1635	10	5D	U1200	11	6H	W2200	11	7E
CR1004	10	7G	Q1400	12	2D	R1302	10	5H	R1640	10	5D	U1201	11	4G	W2300	10	6F
CR1010	10	7F	Q1401	12	2E	R1303	10	6H	R1641	10	5D	U1202	11	4F	W2300	13	6F
CR1100	11	7J	Q1500	13	4E	R1304	10	5H	R1642	10	5D	U1203	11	3G	W2400	14	7F
CR1300	10	6H	Q1501	13	3C	R1305	10	6H	R1650	10	5G	U1204	11	3F	W2500	10	7E
CR1500	13	4E	Q1502	13	3C	R1306	10	7H	R1651	10	6E	U1205	11	3F	W2600	10	7F
CR1600	10	7G	Q1503	13	3C	R1308	10	6G	R1660	10	6F	U1206	11	3F	W2700	9	7E
CR1601	10	5E	Q1504	13	4C	R1309	10	6G	R1661	10	5G	U1300	10	5H	W2800	13	4E
CR1602	10	5E	Q1505	13	4C	R1310	10	6G	R1670	10	6G	U1301	10	6H	W2900	9	6A
CR1801	9	6B	Q1506	13	4C	R1311	10	6G	R1671	10	6G	U1302	10	6G			
CR1802	9	6C	Q1507	13	4C	R1312	10	6G	R1672	10	6G	U1303	10	5G	Y1300	10	4D
CR1803	9	6B	Q1601	10	6G	R1313	10	5G	R1680	14	6F	U1400	12	2H			

DMM INPUT CIRCUIT

9

ASSEMBLY A10

CIRCUIT NUMBER	SCHEM LOCATION	BOARD LOCATION	CIRCUIT NUMBER	SCHEM LOCATION	BOARD LOCATION	CIRCUIT NUMBER	SCHEM LOCATION	BOARD LOCATION
C1801	4B	8A	J1923	7B	7D	R1830	5M	7D
C1802	4E	7C	J1924	7B	7D	R1834	8F	8F
C1804	4E	7C	J1925	7B	7D	R1835	9J	6C
C1805	5E	7D				R1850	5C	8A
C1806	5E	6D	K1801	4G	7C	R1861	8D	5D
C1807	3K	8C	K1802	4G	7C			
C1808	3L	8C	K1803	4G	7C	RT1806	4J	8B
C1811	3M	7D	K1804	5F	7D			
C1813	5N	7D				T1801	9H	5B
C1815	8D	5D	L1801	5B	6B			
C1816	5L	6E	L1802	6B	6B	TP1800	3P	8E
C1817	2P	6E				TP1801	5D	6B
C1818	9L	6B	Q1807	2P	7E			
C1820	5G	8D	Q1808	8E	5D	U1802	3N	7E
C1827	5F	6D	Q1810	7J	8D	U1803	5N	7D
C1830	9J	6B				U1804	8H	6D
C1850	4C	8A	R1801	4D	6C	U1805	9H	6D
			R1802	4H	6B	U1806	8D	6D
CR1801	9K	6B	R1803	4H	7B			
CR1802	9K	6C	R1805	2D	6B	VR1801	4L	8D
CR1803	9K	6B	R1807	3L	7D	VR1802	4L	8D
CR1804	9K	6C	R1809	3K	8C	VR1810	4P	8C
CR1805	4L	7D	R1810	3K	8C	VR1811	4P	8C
CR1806	4L	7D	R1812	4L	8D			
CR1810	3M	8D	R1813	3M	8D	W1801	5B	8A
			R1814	4N	8D	W1802	4B	8B
J1900	9S	6B	R1815	3P	8D	W1824	9H	5B
J1901	9D	6B	R1816	3N	7D	W2700-1	9B	7E
J1902	9S	6B	R1817	5N	6D	W2700-2	9B	7E
J1903	9S	6B	R1818	5M	7D	W2700-3	9B	7E
J1905	9B	6C	R1819	3P	7E	W2900-1	6B	6A
J1906	8S	6C	R1820	9N	6B	W2900-2	6B	6A
J1907	8S	6C	R1821	9L	6B			
J1910	6B	7C	R1823	6J	8D			
J1911	6B	7D	R1825	7H	5D			
J1912	3S	8D	R1826	8H	5D			
J1920	7B	8D	R1827	8E	5D			
J1921	6B	8D	R1828	8E	5D			
J1922	6B	8D	R1829	4N	7E			

Partial A10 also shown on diagrams 10, 11, 12, 13 and 14.

ASSEMBLY A14

CIRCUIT NUMBER	SCHEM LOCATION	BOARD LOCATION	CIRCUIT NUMBER	SCHEM LOCATION	BOARD LOCATION	CIRCUIT NUMBER	SCHEM LOCATION	BOARD LOCATION
S1801A	1C	7A	S1801C	1C	7A	S1801E	1C	6A
S1801B	1C	7A	S1801D	1C	7A	S1802	1B	8A

2236 CONTROL SETTINGS

DC VOLTAGES & AC WAVEFORMS

UPPER FUNCTIONS-	
LOWER FUNCTIONS	IN
Function Select	DCV

50

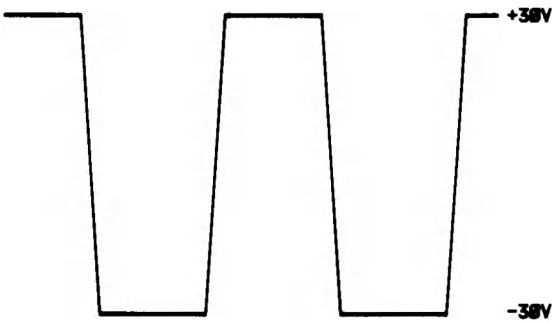

51

4204-63

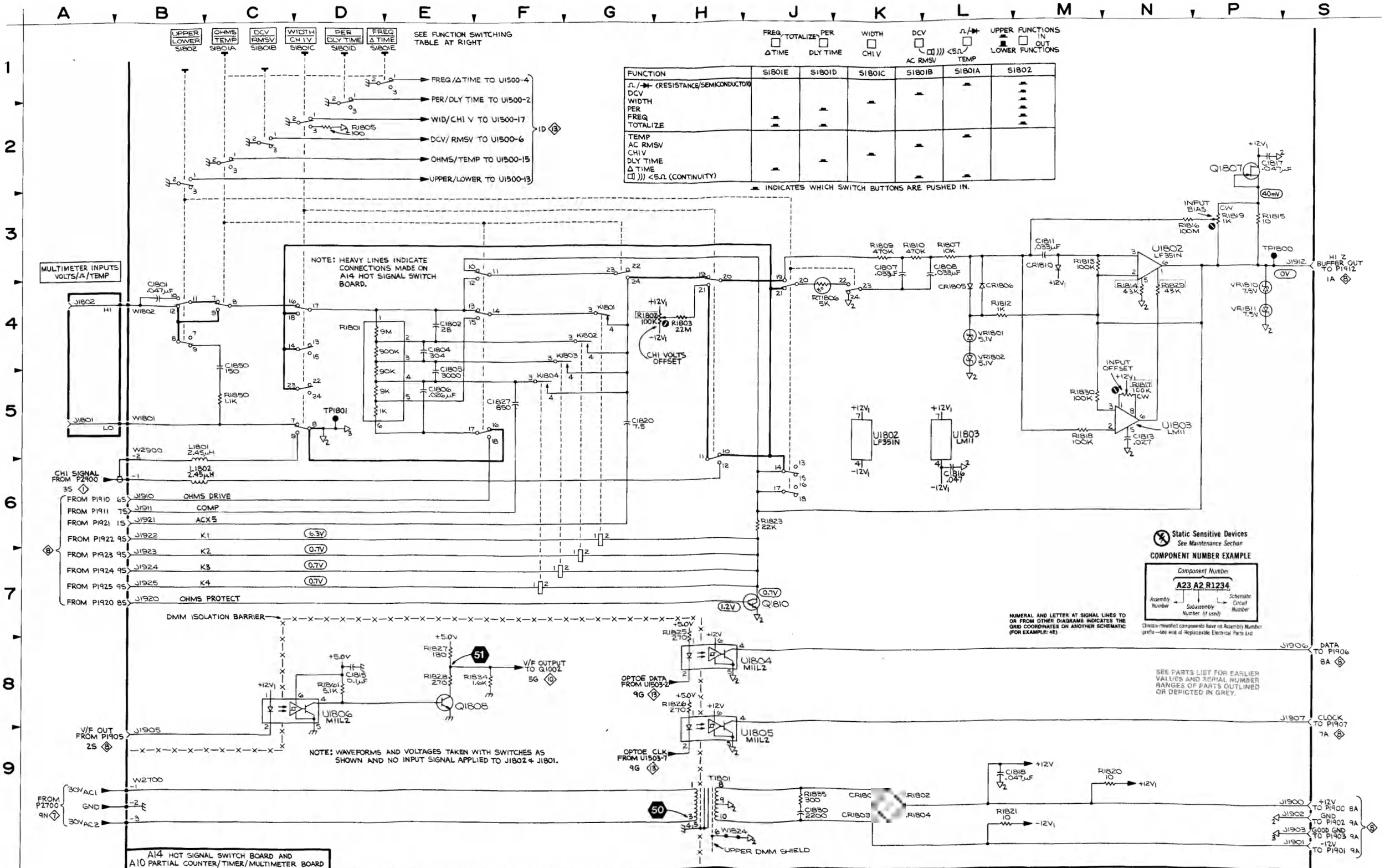

FUNCTION	S1801E	S1801D	S1801C	S1801B	S1801A	S1802
Ω/⊸ (RESISTANCE/SEMICONDUCTOR)				▬	▬	▬
DCV			▬			▬
WIDTH		▬				▬
PER		▬				▬
FREQ	▬					▬
TOTALIZE	▬					▬
TEMP					▬	
AC RMSV				▬		
CH1V			▬			
DLY TIME		▬				
Δ TIME	▬					
⊏⊐))) <5Ω (CONTINUITY)				▬	▬	

4204-15
REV FEB 1986

DMM INPUT CIRCUIT 9

2236 CONTROL SETTINGS

DC VOLTAGES & AC WAVEFORMS

HORIZONTAL MODE	ALT
A SEC/DIV	0.1ms
B SEC/DIV	5µs
A TRIGGER MODE	P-P AUTO
B TRIGGER LEVEL	CW-RUN AFTER DELAY
B DELAY TIME POSITION	FULLY CCW
UPPER FUNCTIONS-	
LOWER FUNCTIONS	OUT
Function Select	Δ TIME
Δ TIME POSITION	Midrange

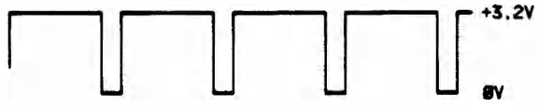

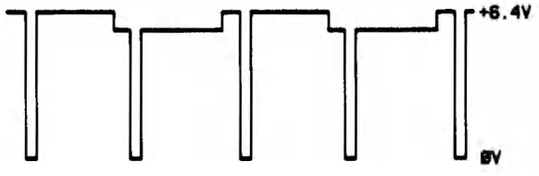

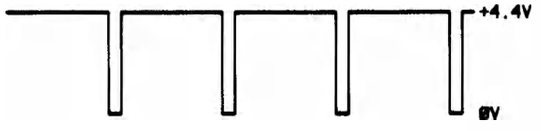

55

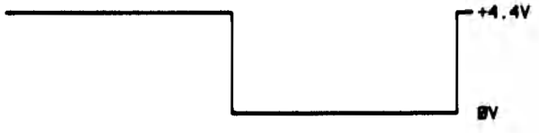

56

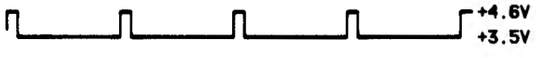

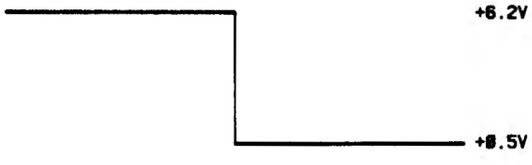

58

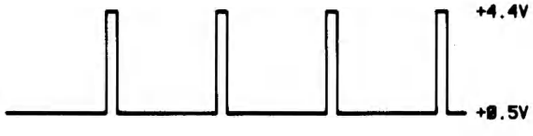

COUNTER FRONT END

ASSEMBLY A10

CIRCUIT NUMBER	SCHEM LOCATION	BOARD LOCATION	CIRCUIT NUMBER	SCHEM LOCATION	BOARD LOCATION	CIRCUIT NUMBER	SCHEM LOCATION	BOARD LOCATION	CIRCUIT NUMBER	SCHEM LOCATION	BOARD LOCATION
C1000	9B	7F	Q1011	5M	8G	R1306	8N	6H	U1003B	4N	8H
C1001	7G	7F	Q1012	4M	8G				U1003C	6M	8H
C1002	9B	7J	Q1300A	8K	6H	R1308	8J	6H	U1003D	2G	8H
C1003	9C	7G	Q1300B	9L	6H	R1309	9J	6H	U1004A	6J	7G
C1004	9C	8J	Q1301	9J	6H	R1310	9S	6H	U1004B	6K	7G
C1300	8L	6H	Q1302	9K	5H	R1311	9S	6H	U1004C	6K	7G
C1301	8L	6H	Q1303	9F	4D	R1312	8P	6H	U1005	6F	8F
C1302	8L	6H	Q1304	9G	4D	R1313	8G	5G	U1006A	4K	8H
C1303	9L	6H	Q1601	1H	6G	R1314	8G	5G	U1006B	4K	8H
C1304	8M	6H	Q1602	1L	6G	R1315	9E	4D	U1006C	7J	8H
C1306	8N	7H	Q1603	2J	6G	R1316	9E	4D	U1006F	3F	8H
C1307	9E	4D	Q1604	4F	5D	R1317	9F	4D	U1300A	8J	5H
C1308	9F	4D				R1318	9F	4D	U1300B	8K	5H
C1309	9F	4D	R1001	6F	7F	R1319	9G	4D	U1300C	8L	5H
C1311	9F	4D	R1002	6G	8F	R1320	9G	4D	U1301	9N	6H
C1313	9D	6H	R1003	6H	8F	R1362	8K	6H	U1302	8P	6H
C1315	9G	4D	R1004	6H	8F	R1363	9L	6H	U1303A	9H	5H
C1600	4E	8J	R1005	6H	7F	R1600	2C	5G	U1303B	8H	5H
C1605	3J	6G	R1006	7D	7F	R1601	1D	5G	U1509A	4G	4D
C1606	9C	5G	R1007	7C	7F	R1602	2F	8G	U1600A	2C	5G
C1610	3H	6F	R1008	6D	7F	R1603	2F	8G	U1600B	2D	5G
C1611	3J	6F	R1009	6E	7F	R1604	2F	8G	U1601	1E	5G
C1660	2B	5G	R1010	6E	7F	R1605	2G	8J	U1602A	3D	5F
C1680	3J	6G	R1012	5J	8G	R1606	2H	8J	U1602B	4D	5F
C1690*	3B	6F	R1013	5L	8G	R1607	2G	8J	U1603	8D	5F
C1691*	3S	6G	R1014	6K	7G	R1608	3G	8J	U1604A	3J	6G
C1692*	1B	6F	R1015	6L	7G	R1609	4E	8J	U1604B	2M	6G
			R1016	6J	7G	R1612	1G	6G	U1700A	4C	5F
CR1001	5L	8G	R1017	6L	7G	R1613	1F	6G	U1700B	4B	5F
CR1002	5K	8G	R1018	5L	7G	R1615	1J	6G	U1700C	2B	5F
CR1003	7K	8G	R1019	5L	8G	R1617	2J	6F	U1700D	2C	5F
CR1004	6J	7G	R1020	4L	8G	R1618*	2K	6F			
CR1010	7H	7F	R1021	6L	8J	R1619*	2K	6F	VR1601	2L	6G
CR1300	9M	6H	R1022	6N	7J	R1631	8C	5F			
CR1600	2F	8G	R1023	6D	7J	R1632	3C	5F	W1300	9H	5H
CR1601	2E	5E	R1024	4H	7G	R1633	4G	5D	W1301	8H	5H
CR1602	2E	5E	R1025	6M	7H	R1634	2D	7G	W2100-1	6A	7E
			R1026	7L	7H	R1635	3F	5D	W2100-2	6A	7E
L1300	8M	6H	R1027	7M	7G	R1640	3F	5D	W2100-3	8A	7E
			R1028	9N	7J	R1641	3F	5D	W2100-4	7A	7E
P1000-1	8J	8J	R1029	6H	7G	R1642	4F	5D	W2200-1	9A	7E
P1000-2	8J	8J	R1030	7H	7F	R1650	1C	6G	W2200-3	4A	7E
P1000-3	8J	8J	R1031	7J	7G	R1651	8D	6E	W2200-5	7S	7E
			R1032	7J	7G	R1660	3H	6F	W2200-6	1A	7E
Q1001	5F	7F	R1033	8G	7F	R1661	2B	5G	W2300-1	1A	6F
Q1002	5G	8F	R1034	5N	7J	R1670	1L	6G	W2300-3	3S	6F
Q1003	5H	8F	R1035	6P	7J	R1671	1L	6G	W2300-4	2S	6F
Q1004	5H	8F	R1050	5J	8G	R1672	1K	6G	W2300-5	3A	6F
Q1005	6H	7F	R1300	8K	6H	R1690*	2K	6G	W2500-1	5A	7E
Q1006	6E	7F	R1301	8K	6H				W2500-2	5A	7E
Q1007	8H	7F	R1302	8K	5H	U1001A	6L	7H	W2600-1	2A	7F
Q1008	6M	7H	R1303	8L	6H	U1001B	6N	7H	W2600-2	2A	7F
Q1009	7M	7H	R1304	8M	5H	U1002A	5J	8G			
Q1010	5L	7H	R1305	8M	6H	U1002B	5L	8G	Y1300	9F	4D
						U1002C	2G	8G			
						U1003A	6P	8H			

Partial A10 also shown on diagrams 9, 11, 12, 13 and 14.

***See Parts List for serial number ranges.**

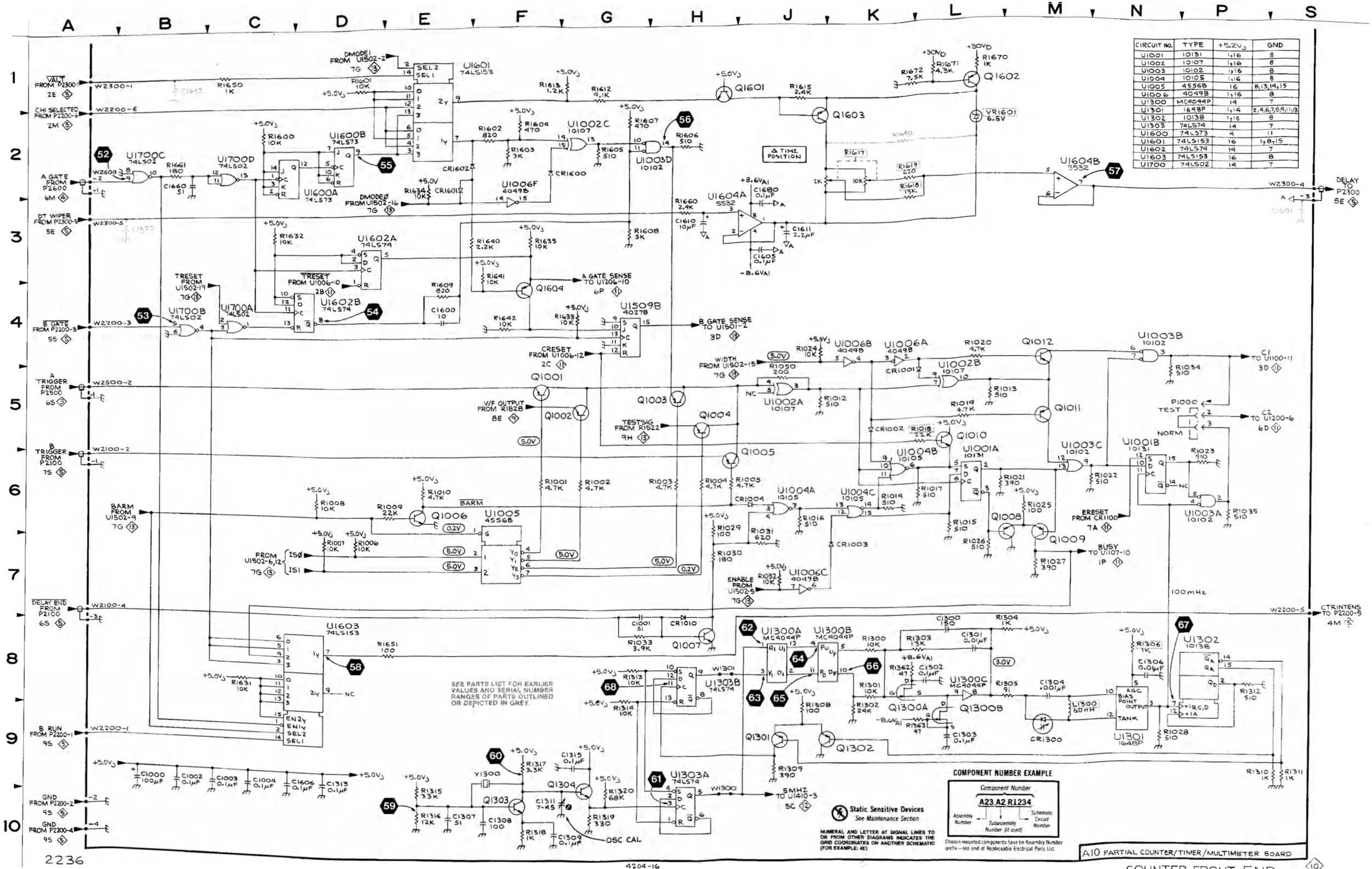

CIRCUIT NO.	TYPE	+5.2V	GND
U1001	10131	1,16	8
U1002	10107	1,16	8
U1003	10102	1,16	8
U1004	10105	1,16	8
U1005	4556B	16	8,13,14,15
U1006	4049B	1,16	8
U1300	MC4044P	14	7
U1301	1648P	1,14	2,4,6,7,8,9,11,13
U1302	10138	1,16	8
U1303	74LS74	14	7
U1600	74LS73	4	11
U1601	74LS153	16	1,8,15
U1602	74LS74	14	7
U1603	74LS153	16	8
U1700	74LS02	14	7

2236 CONTROL SETTINGS

DC VOLTAGES & AC WAVEFORMS

HORIZONTAL MODE	A
A TRIGGER MODE	P-P AUTO
A SOURCE	LINE
UPPER FUNCTIONS-	
LOWER FUNCTIONS	IN
Function Select	TOTALIZE

69

70

71
72

73

4204-65

COUNT CHAINS

ASSEMBLY A10

CIRCUIT NUMBER	SCHEM LOCATION	BOARD LOCATION	CIRCUIT NUMBER	SCHEM LOCATION	BOARD LOCATION
C1100	7A	6J	R1110	1C	5H
C1101	7A	4J	R1200	6F	6J
C1200	7B	6H	R1201	7F	6J
C1201	7B	4H	R1202	7E	6J
C1204	7C	3G	R1203	7E	6J
			R1204	8E	6J
CR1100	2C	7J	R1205	7C	5J
			R1206	7F	5J
P1100-1	4H	4H	R1207	8E	5J
P1100-2	4H	4H	R1208	8J	4G
P1100-3	4H	4H			
P1200-1	8H	4G	U1006D	2B	8H
P1200-2	8H	4G	U1006E	2C	8H
P1200-3	8H	4G	U1100	3D	6J
			U1101A	8G	4J
Q1100	2E	6J	U1101B	4G	4J
Q1101	2F	6J	U1102A	1H	4H
Q1102	3E	5J	U1102B	3H	4H
Q1103	3F	5J	U1103	4K	4H
Q1200	6E	6J	U1104	1J	3J
Q1201	6F	6H	U1105	1L	3J
Q1202	8E	5H	U1106	1M	3H
Q1203	8F	5J	U1107	1P	3G
			U1200	6D	6J
R1100	2E	6J	U1201A	6H	4G
R1101	3F	6J	U1201B	7H	4G
R1102	2E	6J	U1202	8K	4F
R1103	3E	6J	U1203	6J	3G
R1104	4E	6J	U1204	6L	4G
R1105	3E	5J	U1205	6M	4F
R1106	3F	5J	U1206	6P	3F
R1107	4E	5J			
R1108	4F	5J	W2200-2	9A	7E
R1109	4J	4H	W2200-4	9A	7E

Partial A10 also shown on diagrams 9, 10, 12, 13 and 14.

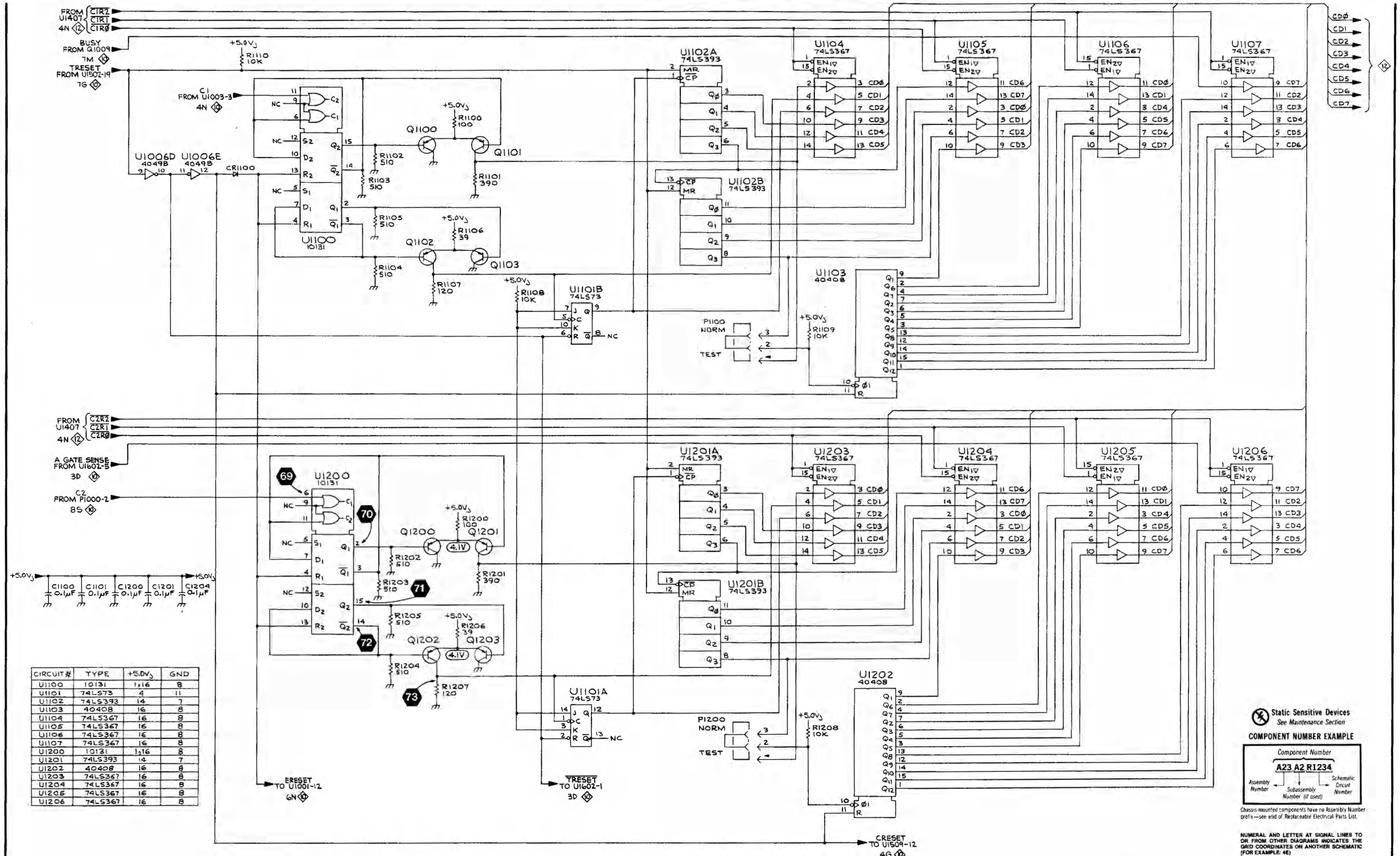

CIRCUIT #	TYPE	+5.0V	GND
U1100	10131	1,16	8
U1101	74LS73	4	11
U1102	74LS393	14	7
U1103	40408	16	8
U1104	74LS367	16	8
U1105	74LS367	16	8
U1106	74LS367	16	8
U1107	74LS367	16	8
U1200	10131	1,16	8
U1201	74LS393	14	7
U1202	40408	16	8
U1203	74LS367	16	8
U1204	74LS367	16	8
U1205	74LS367	16	8
U1206	74LS367	16	8

2236 CONTROL SETTINGS

DC VOLTAGES & AC WAVEFORMS

HORIZONTAL MODE	A
A TRIGGER MODE	P-P AUTO
A SOURCE	LINE
UPPER FUNCTIONS-	
LOWER FUNCTIONS	IN
Function Select	TOTALIZE

74

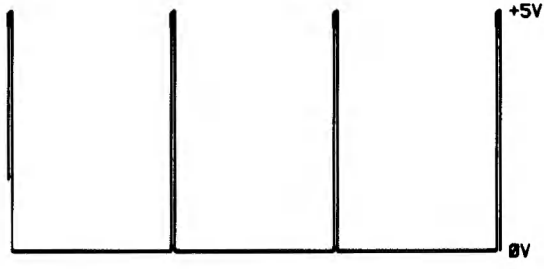

75

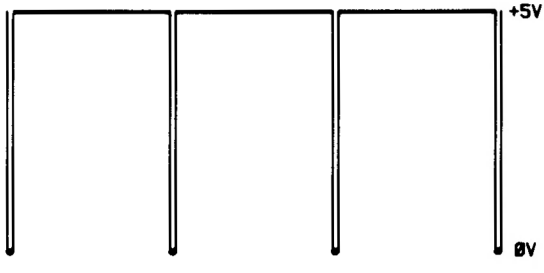

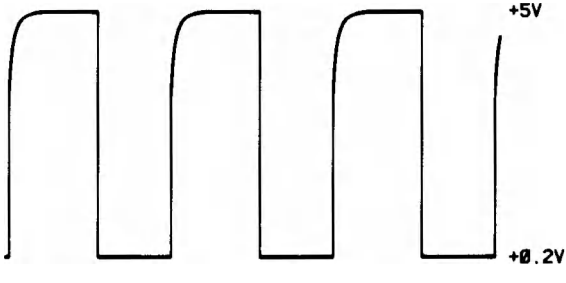

CPU SYSTEM

ASSEMBLY A10

CIRCUIT NUMBER	SCHEM LOCATION	BOARD LOCATION	CIRCUIT NUMBER	SCHEM LOCATION	BOARD LOCATION	CIRCUIT NUMBER	SCHEM LOCATION	BOARD LOCATION
C1400	4D	2E	R1404G	5G	2J	U1405C	6K	2F
C1401	8B	2H	R1404H	5G	2J	U1406A	5M	2G
C1402	8C	2F	R1404I	5G	2J	U1406B	3K	2G
C1403	8C	3G	R1405A	6B	1F	U1406C	5K	2G
			R1405C	6M	1F	U1406D	2K	2G
P1400-1*	4B	2D	R1405D	5B	1F	U1407	4M	2F
P1400-2*	4B	2D	R1405E	5D	1F	U1408	5M	2E
P1402-1*	5E	1H	R1406	5J	2G	U1409	7H	3F
P1402-2*	5E	1H	R1407	5F	1H	U1410A	5C	1E
P1404-1*	4G	1H	R1408	3F	2H	U1410B	5D	1E
P1404-2*	4G	1H				U1411	5D	1E
P1404-3*	4G	1H	S1400*	7F	3G			
						W1400A*	6P	2G
Q1400	4C	2D	U1400	1F	2H	W1400B*	7P	2G
Q1401	4D	2E	U1401	3P	2H	W1401W*	4P	2G
			U1402	5P	2G	W1401X*	4P	2G
R1400	4C	1D	U1403A	6E	2F	W1402*	6E	1H
R1401	4C	1D	U1403B	4E	2F	W1402Y*	3P	2G
R1402	4C	1D	U1403C	6M	2F	W1402Z*	3P	2G
R1403	4D	2D	U1403D	5H	2F	W1405*	2J	2F
R1404A	3F	2J	U1403E	3J	2F	W1410*	7F	2G
R1404B	5G	2J	U1403F	4E	2F	W1411*	8F	3G
R1404C	5G	2J	U1404A	6K	2F	W1412*	8F	3G
R1404D	5G	2J	U1404B	3K	2F	W1413*	8F	3G
R1404E	5G	2J	U1405A	2K	2F	W1414*	8F	3G
R1404F	5G	2J	U1405B	2K	2F	W1415*	8F	3G
						W1416*	8F	2G
						W1417*	9F	2G

Partial A10 also shown on diagrams 9, 10, 11, 13 and 14.

***See Parts List for serial number ranges.**

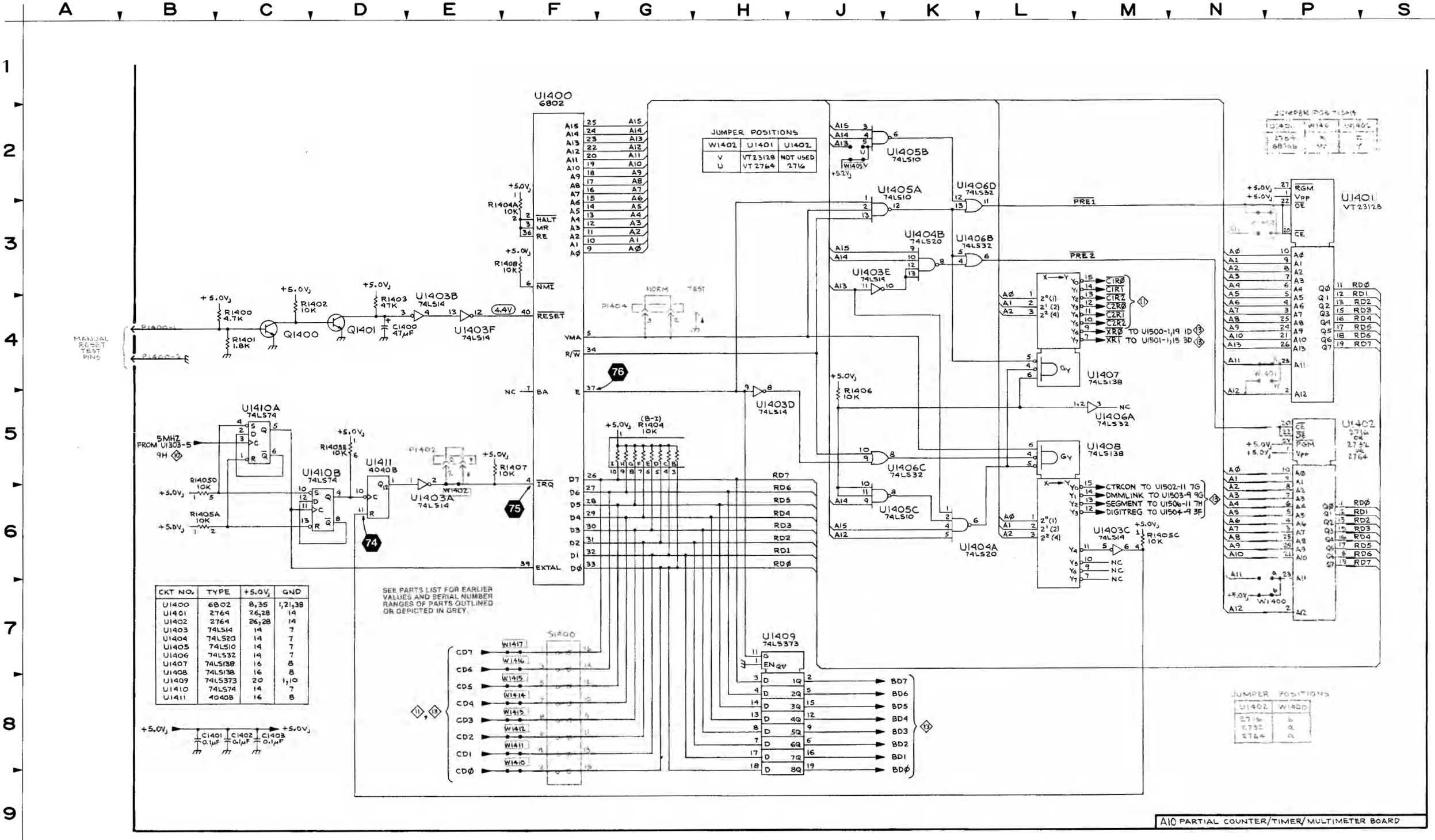

CKT NO.	TYPE	+5.0V	GND
U1400	6802	8,35	1,21,38
U1401	2764	26,28	14
U1402	2764	26,28	14
U1403	74LS14	14	7
U1404	74LS20	14	7
U1405	74LS10	14	7
U1406	74LS32	14	7
U1407	74LS138	16	8
U1408	74LS138	16	8
U1409	74LS373	20	1,10
U1410	74LS74	14	7
U1411	4040B	16	8

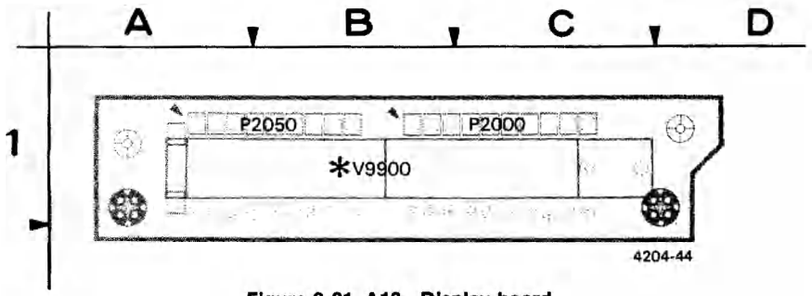

Figure 9-21. A13—Display board.

*These components are located on the reverse side of the circuit board.

A13—DISPLAY BOARD

CIRCUIT NUMBER	SCHEM NUMBER	CIRCUIT NUMBER	SCHEM NUMBER
P2000-10	13	P2050-1	13
P2000-1	13	P2050-2	13
P2000-2	13	P2050-3	13
P2000-3	13	P2050-4	13
P2000-4	13	P2050-5	13
P2000-5	13	P2050-6	13
P2000-6	13	P2050-7	13
P2000-7	13	P2050-8	13
P2000-8	13	P2050-9	13
P2000-9	13	V9900	13

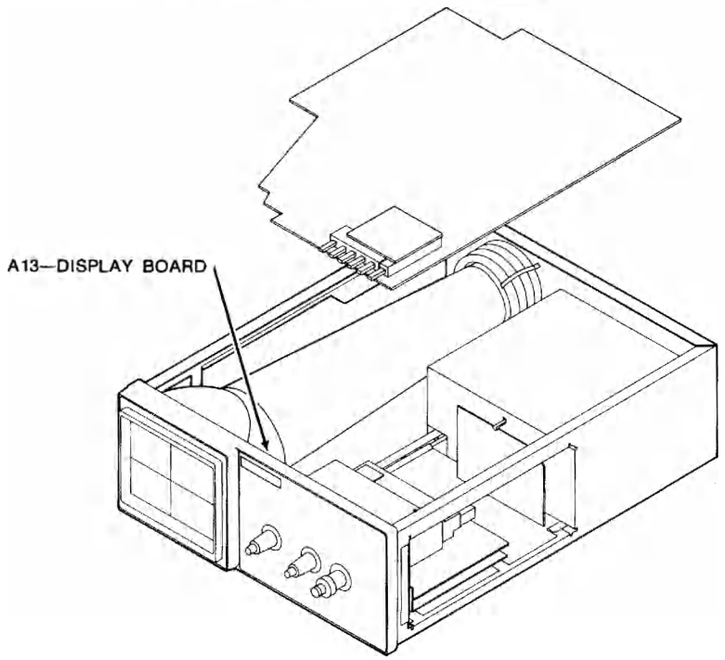

ASSEMBLY A10

CIRCUIT NUMBER	SCHEM LOCATION	BOARD LOCATION	CIRCUIT NUMBER	SCHEM LOCATION	BOARD LOCATION	CIRCUIT NUMBER	SCHEM LOCATION	BOARD LOCATION
C1500	9C	3E	R1502	5D	4E	U1503	9G	4C
C1501	9C	3D	R1503	5B	4E	U1504	3F	4C
C1503	9D	4C	R1504	7F	3D	U1505	3H	4B
C1590*	6B	6F	R1505	8D	4C	U1506	7H	4B
C1591	6C	4F	R1506	1F	4C	U1507	4L	4B
C1592	5B	4F	R1507	6G	3B	U1508	5K	4B
C1593	5B	4E	R1508	2F	5D	U1509A	1G	4D
C1594	4B	4E	R1509	1H	4C	W1832*	9M	
C1819	9L	5C	R1510	2H	4C	W2000-10	3L	5A
			R1511	2H	4C	W2000-1	3N	5A
CR1500	5C	4E	R1512	2H	4C	W2000-2	3N	5A
			R1513	1J	4C	W2000-3	3M	5A
LS1801	9M	5C	R1514	2J	4C	W2000-4	3M	5A
			R1515	3J	3C	W2000-5	3M	5A
Q1500	5D	4F	R1516	2J	3C	W2000-6	3M	5A
Q1501	3J	3C	R1517	2J	3C	W2000-7	3M	5A
Q1502	2K	3C	R1518	3K	3C	W2000-8	3L	5A
Q1503	3K	3C	R1519	3K	3C	W2000-9	3L	5A
Q1504	1H	4C	R1520	5C	4E	W2050-1	3S	5A
Q1505	2J	4C	R1521	9J	5D	W2050-2	3S	5A
Q1506	2J	4C	R1522	9H	5D	W2050-3	3S	5A
Q1507	2H	4C	R1523	9K	5E	W2050-4	3P	5A
Q1809	9L	5C	R1524	5C	4E	W2050-5	3P	5A
			R1525	9J	4C	W2050-6	3P	5A
R1500A	4C	3D	R1832*	9L	5D	W2050-7	3P	5A
R1500B	1C	3D	R1833	9K	5C	W2050-8	3P	5A
R1500C	1C	3D				W2050-9	3N	5A
R1500D	1C	3D	TP1000	9K	4F	W2300-2	6A	6F
R1500E	1C	3D	TP1500	8H	4F	W2800-1	5A	4F
R1500F	1C	3D	TP1501	9J	5E	W2800-2	5A	4F
R1500G	1C	3D				W2800-3	4A	4E
R1500H	1C	3D	U1500	1D	3E	W2800-4	4A	4E
R1500I	1C	3D	U1501	3D	3E	W2800-5	3A	4E
R1501	4C	4E	U1502	7G	3D			

Partial A10 also shown on diagrams 9, 10, 11, 12 and 14.

ASSEMBLY A13

CIRCUIT NUMBER	SCHEM LOCATION	BOARD LOCATION	CIRCUIT NUMBER	SCHEM LOCATION	BOARD LOCATION	CIRCUIT NUMBER	SCHEM LOCATION	BOARD LOCATION
P2000-10	3L	1C	P2000-7	3M	1C	P2050-5	3P	1B
P2000-1	3N	1B	P2000-8	3L	1C	P2050-6	3P	1B
P2000-2	3N	1B	P2000-9	3L	1C	P2050-7	3P	1B
P2000-3	3M	1B	P2050-1	3S	1A	P2050-8	3P	1B
P2000-4	3M	1C	P2050-2	3S	1A	P2050-9	3N	1B
P2000-5	3M	1C	P2050-3	3S	1A			
P2000-6	3M	1C	P2050-4	3P	1B	V9900	1L	1B

*See Parts List for serial number ranges.

2236 CONTROL SETTINGS

AC WAVEFORMS

UPPER FUNCTIONS-
LOWER FUNCTIONS IN
Function Select DCV

77

78

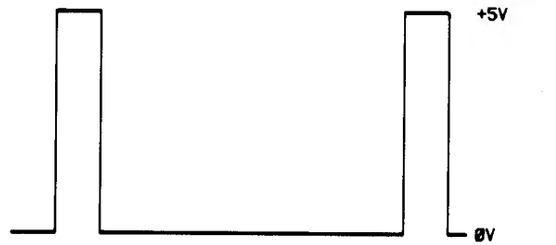

79

80

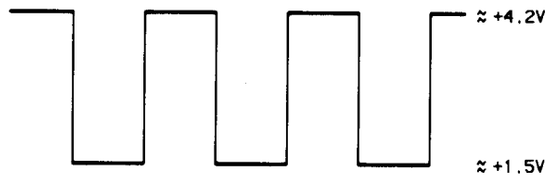

4204-67

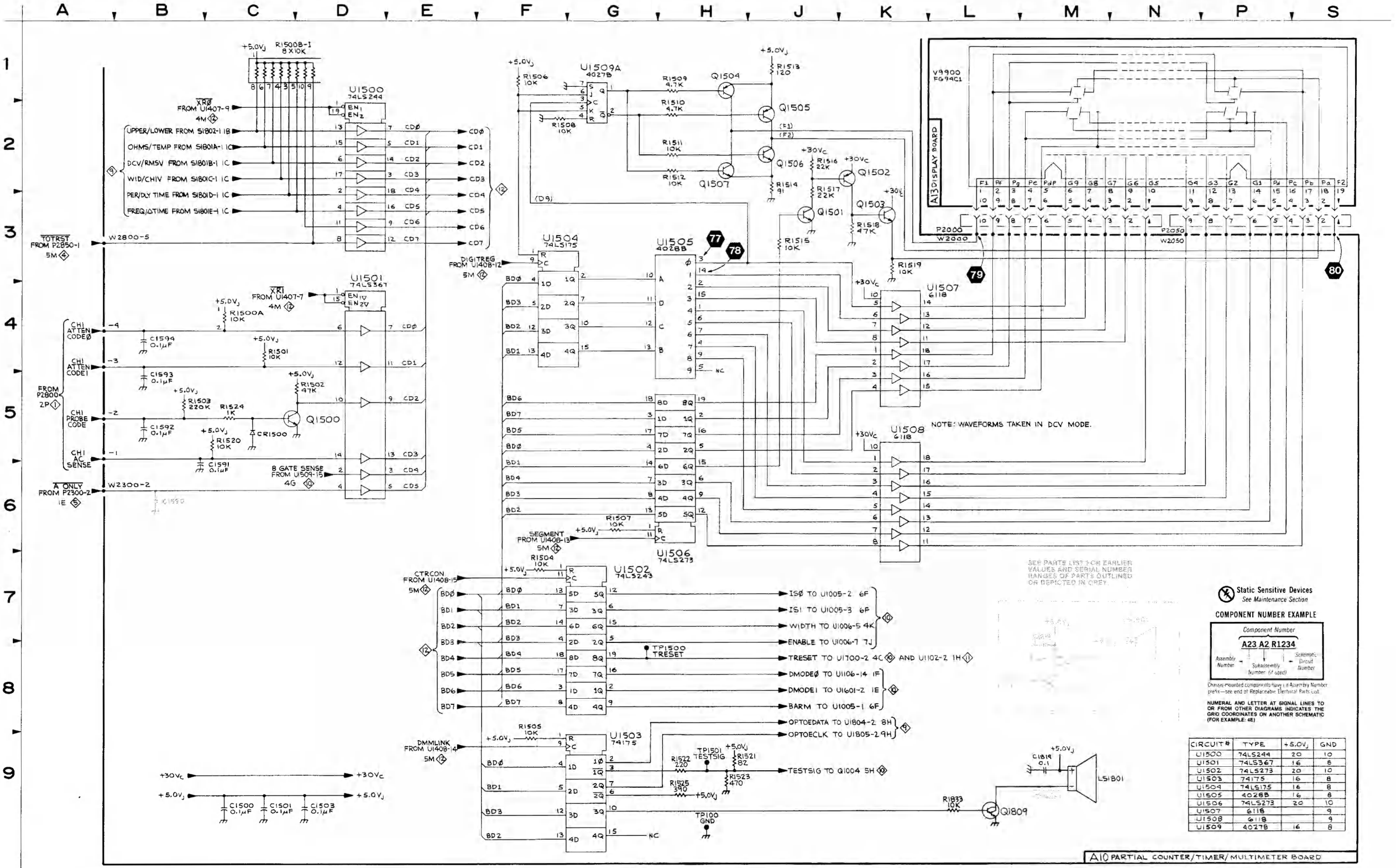

CIRCUIT #	TYPE	+5.0V$_J$	GND
U1500	74LS244	20	10
U1501	74LS367	16	8
U1502	74LS273	20	10
U1503	74175	16	8
U1504	74LS175	16	8
U1505	4028B	16	8
U1506	74LS273	20	10
U1507	6118		9
U1508	6118		9
U1509	4027B	16	8

POWER DISTRIBUTION

ASSEMBLY A1

CIRCUIT NUMBER	SCHEM LOCATION	BOARD LOCATION	CIRCUIT NUMBER	SCHEM LOCATION	BOARD LOCATION	CIRCUIT NUMBER	SCHEM LOCATION	BOARD LOCATION
C200	4H	3E	R797	4K	3G	W977	8E	6E
C201	8H	3E	R799	2D	3E	W979	8K	3H
C220	4H	2D	R964	6D	3H	W991	5D	5B
C274	3E	2G	R966	6F	7E	W992	5E	5A
C451	9F	6D				W993	9E	6B
C494	4F	5D	TP961	8D	8E	W995	9E	6B
C499	8F	5C				W997	4G	4D
C507	6F	6C	W408	9F	7B	W998	8H	4E
C590	7J	7D	W494	4F	5D	W999	8H	2E
C796	8K	2G	W556	6D	2H	W9001-12	4P	5A
C797	4K	3G	W590	7J	7C	W9001-5	4P	5A
C799	2E	3F	W591	7H	7D	W9400-15	6P	7E
			W592	6H	8C	W9400-16	6P	7E
E200	4H	4E	W885	8L	4G	W9400-18	6P	7E
E201	8H	4E	W954	2D	6F	W9400-23	6P	7E
E272	3E	1G	W955	2D	4H	W9400-24	7P	7E
E590	6H	8C	W956	2D	5F	W9400-25	7P	8E
			W957	3C	7F	W9400-26	5P	8E
P2400-1	6C	8D	W959	2D	4E	W9400-27	5P	8E
P2400-2	3C	8D	W960	4D	7F	W9400-3	6P	6E
P2400-3	7C	8D	W961	8D	8F	W9700-8	2P	7E
P2400-4	4C	8D	W964	3D	3H	W9705-1	3P	5E
P2400-5	5C	8D	W965	3D	3H	W9705-4	3P	5E
			W968	6E	8F	W9705-6	4P	5E
R220	4H	2D	W971	4E	7E	W9705-7	3P	5E
R451	9F	6D	W972	4E	6E	W9705-8	2P	5E
R494	4F	5E	W974	4J	3H	W9991-1	8P	5E
R499	8F	5E	W975	4K	3H	W9991-2	9P	5E
R796	8K	2G	W976	8E	7E	W9991-3	9P	5E

Partial A1 also shown on diagrams 2, 3, 4, 5, 6 and 7.

ASSEMBLY A3

CIRCUIT NUMBER	SCHEM LOCATION	BOARD LOCATION	CIRCUIT NUMBER	SCHEM LOCATION	BOARD LOCATION	CIRCUIT NUMBER	SCHEM LOCATION	BOARD LOCATION
W89	4P	1C	W9000-12	4P	4B	W9000-5	4P	4A

Partial A3 also shown on diagrams 1, 2, 3, 4, 5, 6 and 7.

ASSEMBLY A10

CIRCUIT NUMBER	SCHEM LOCATION	BOARD LOCATION	CIRCUIT NUMBER	SCHEM LOCATION	BOARD LOCATION	CIRCUIT NUMBER	SCHEM LOCATION	BOARD LOCATION
R1680	4B	6F	W1101	6B	6F	W2400-3	7B	7F
R1681	7B	6F	W1600	3B	6F	W2400-4	4B	7F
			W2400-1	6B	7F	W2400-5	5B	7F
W1100	5B	6F	W2400-2	3B	7F			

Partial A10 also shown on diagrams 9, 10, 11, 12 and 13.

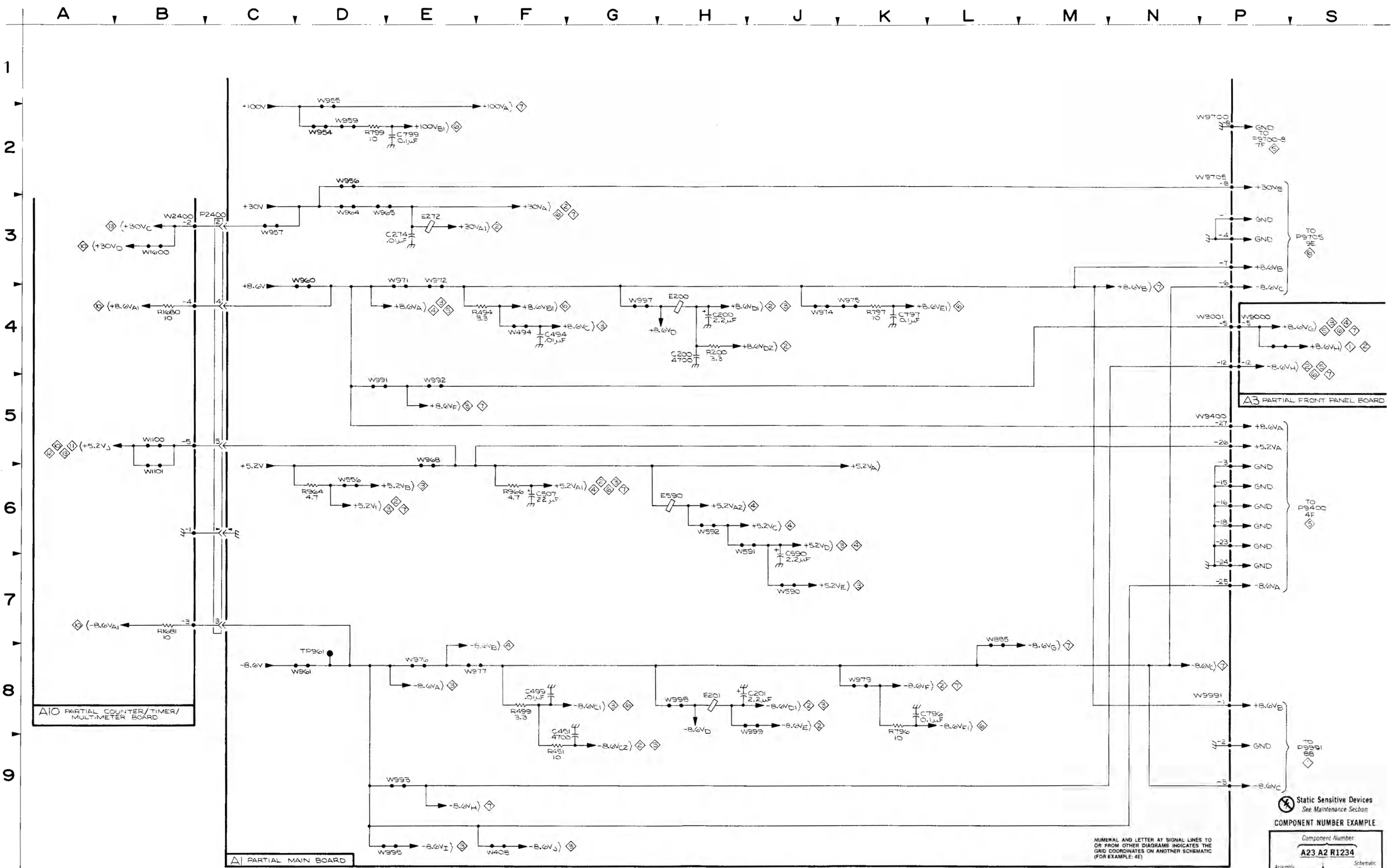

2236

4204-20

POWER DISTRIBUTION 14

Figure 9-22. Partial A11—Counter/Timer/Multimeter board with Option 14.

*These components are located on the reverse side of the circuit board.

TEST WAVEFORM FOR OPTION 14

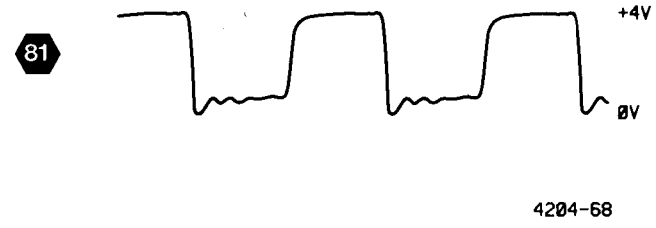

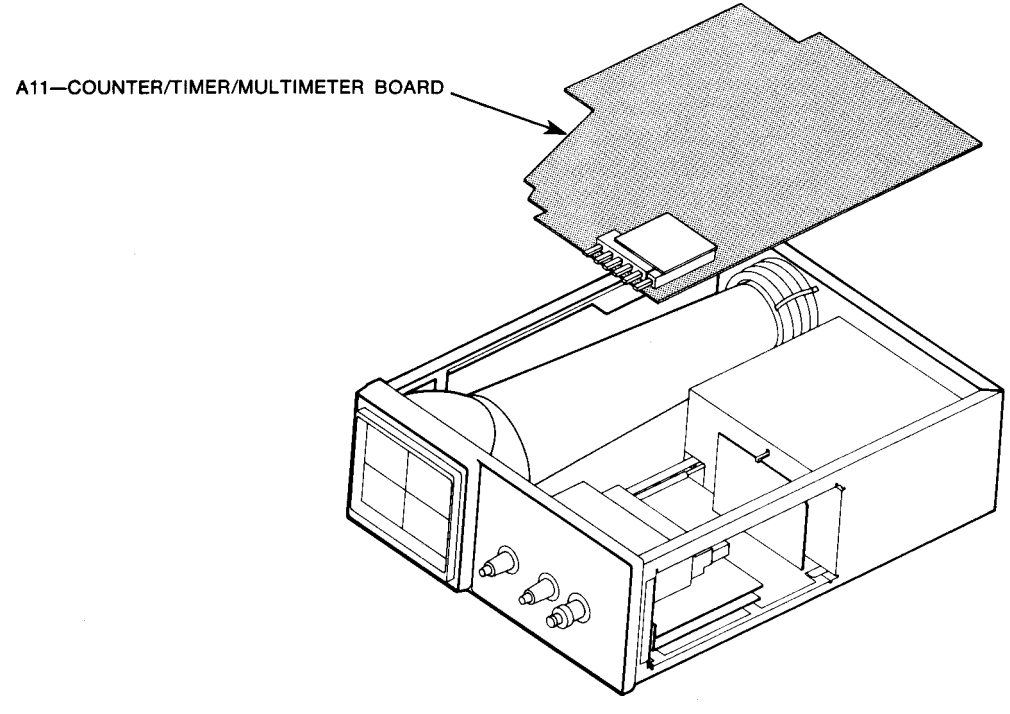

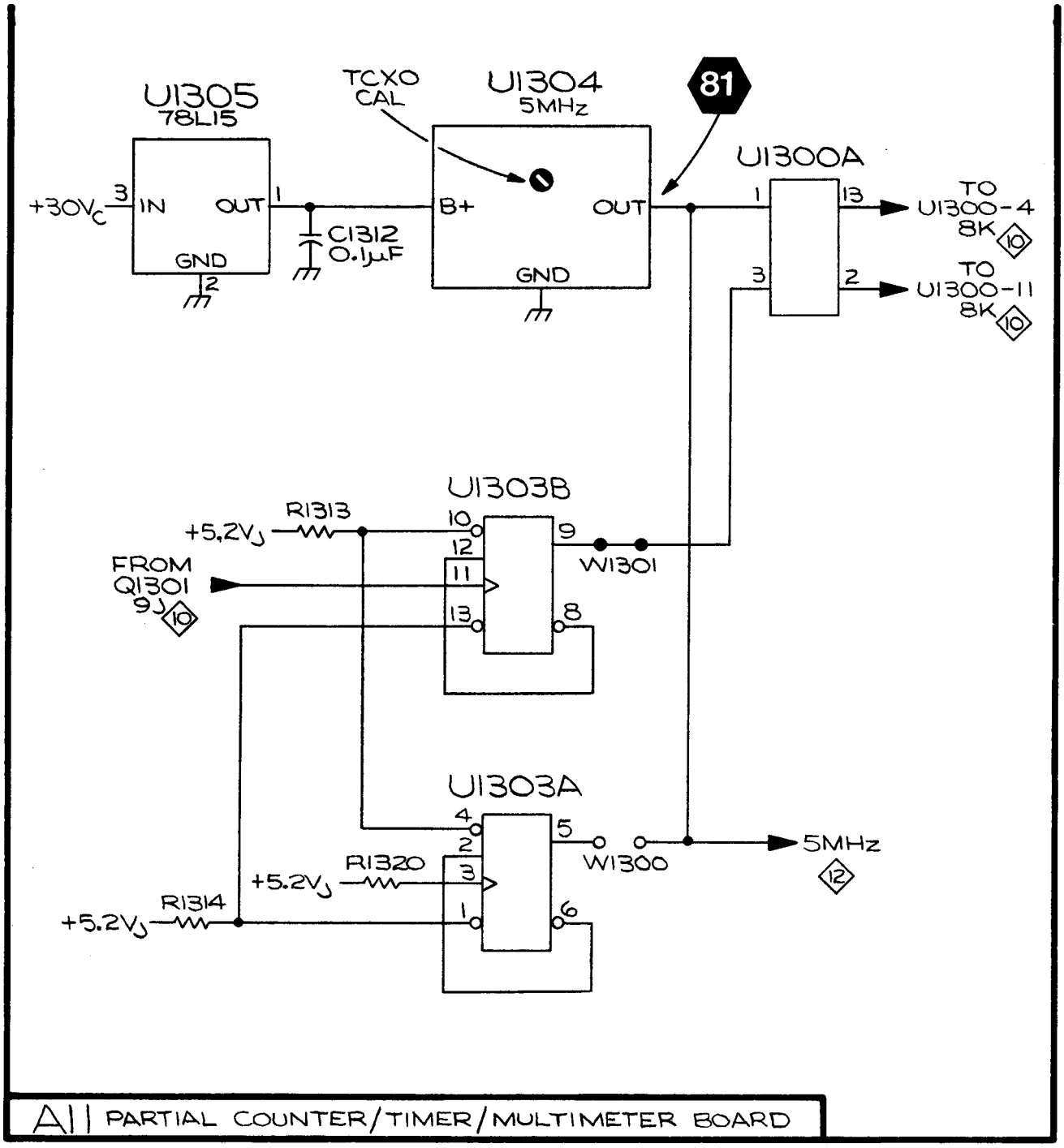

A11 PARTIAL COUNTER/TIMER/MULTIMETER BOARD

2236 OPTION 14

4204-22

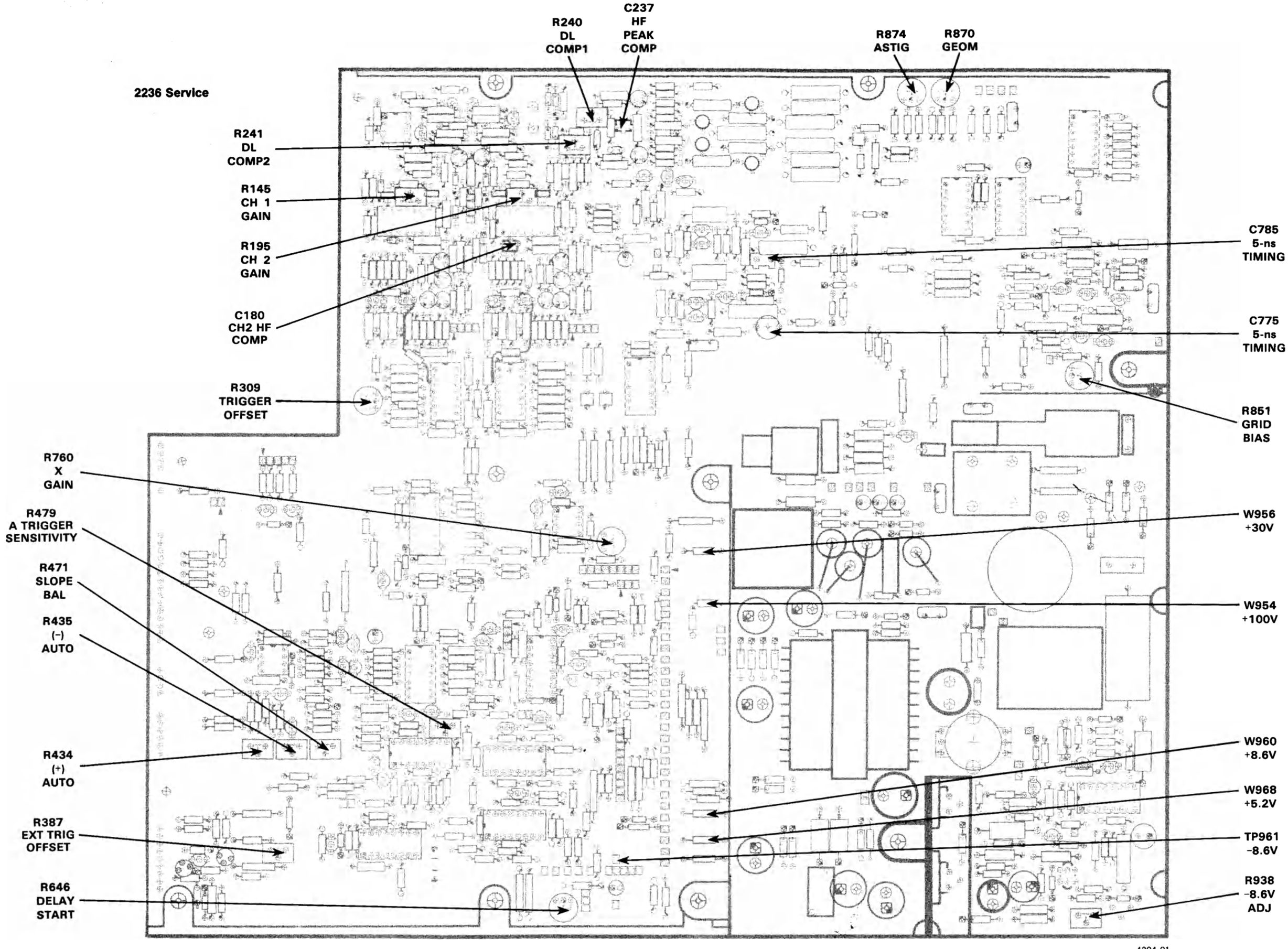

4204-01

A1—MAIN BOARD ADJUSTMENT LOCATIONS

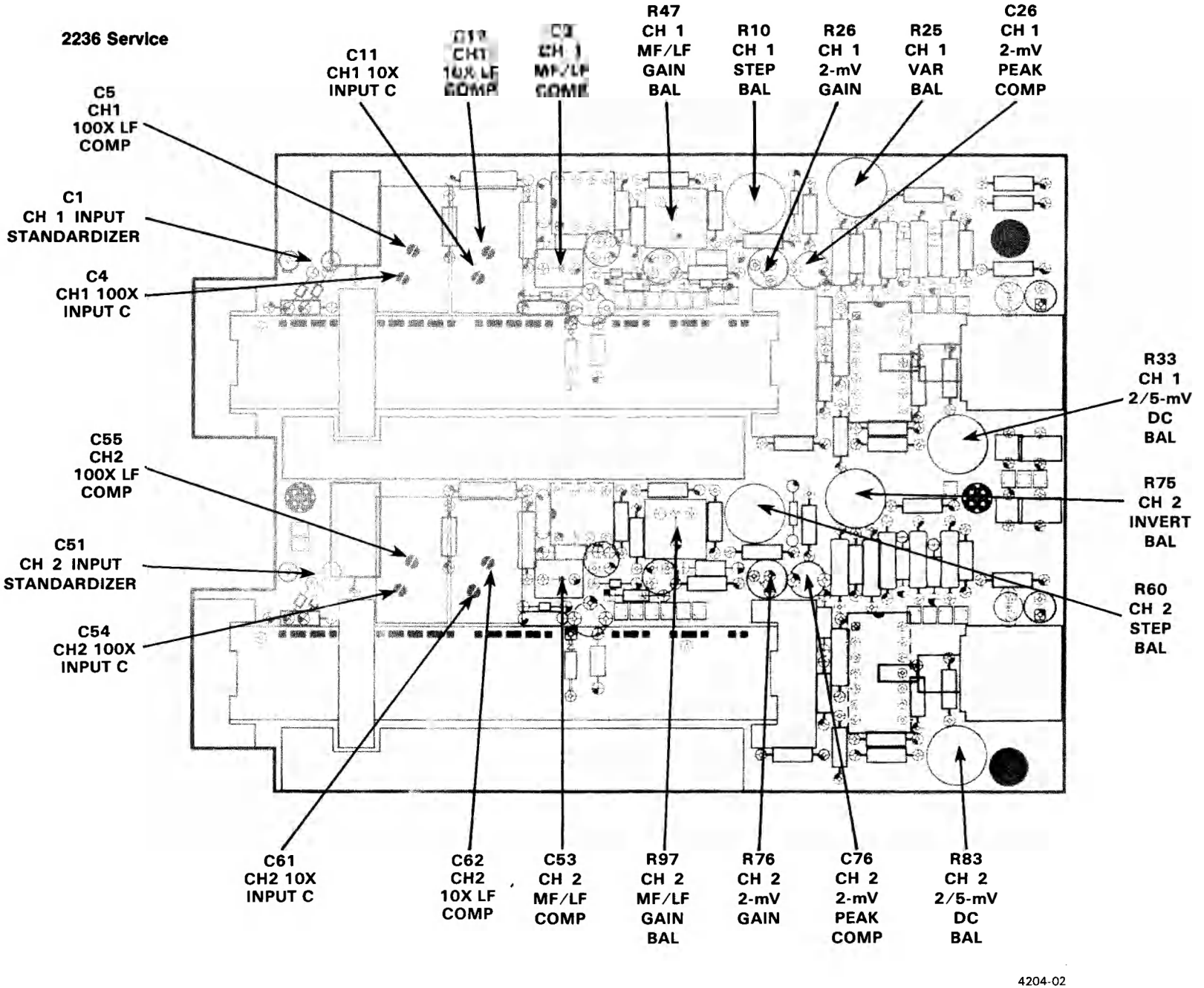

A2—ATTENUATOR BOARD ADJUSTMENT LOCATIONS

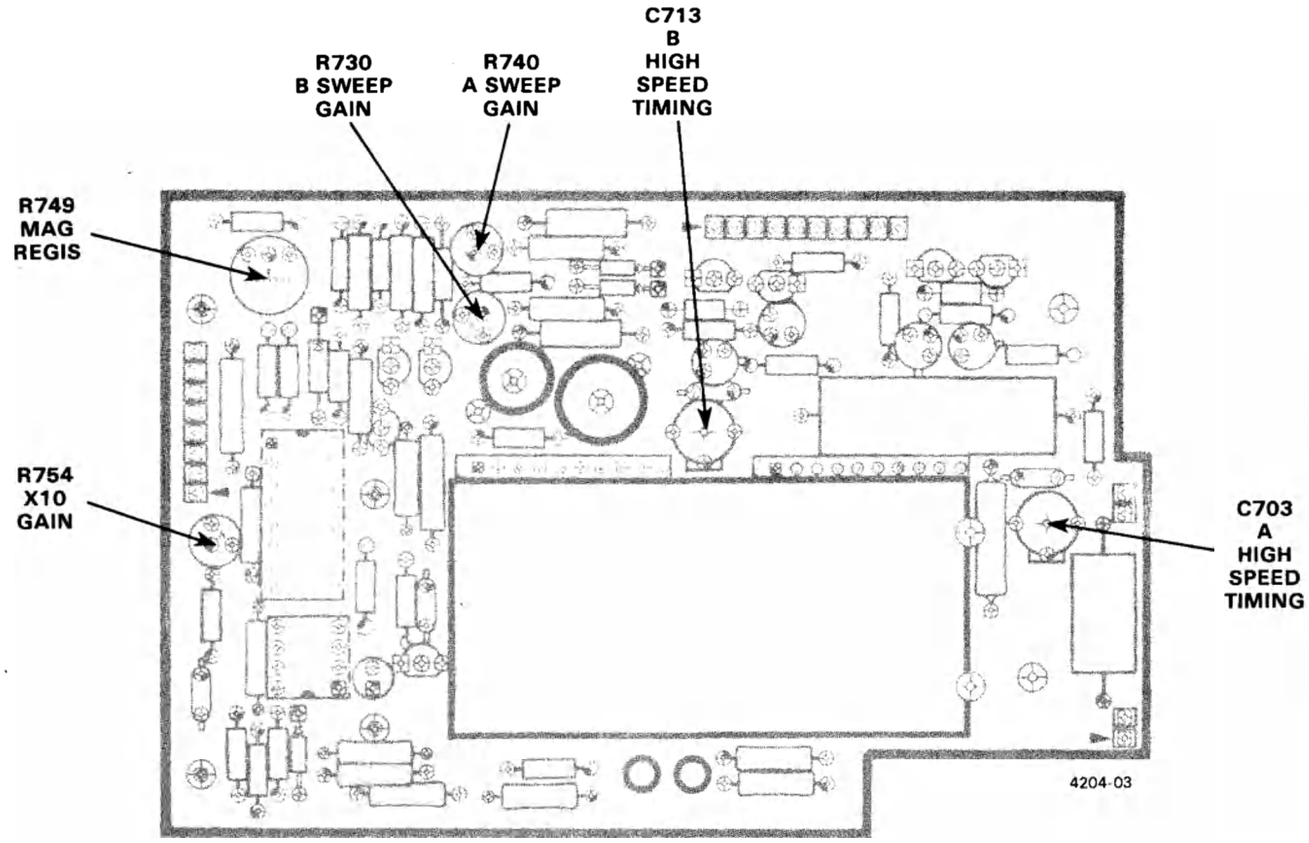

A4—TIMING BOARD ADJUSTMENT LOCATIONS

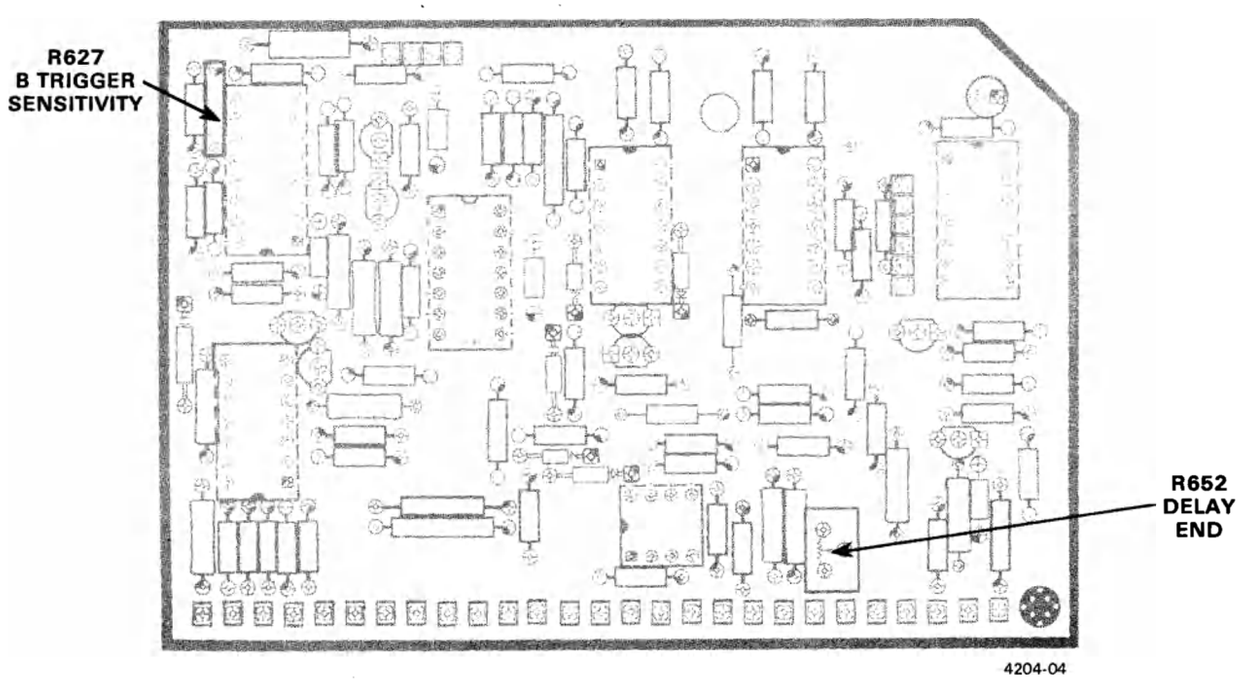

A5—ALTN SWEEP LOGIC BOARD ADJUSTMENT LOCATIONS

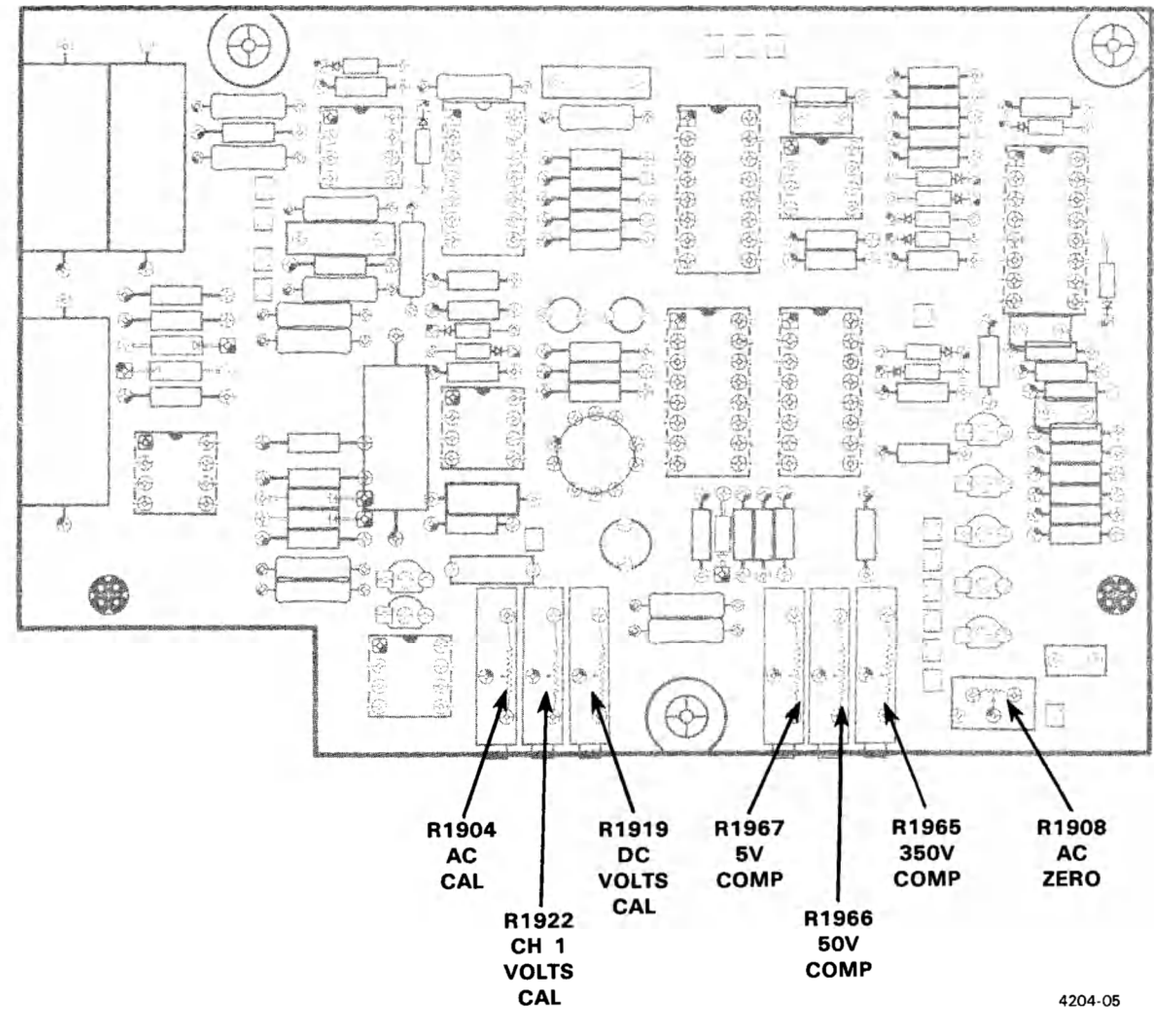

A12—MULTIMETER CONTROL BOARD ADJUSTMENT LOCATIONS

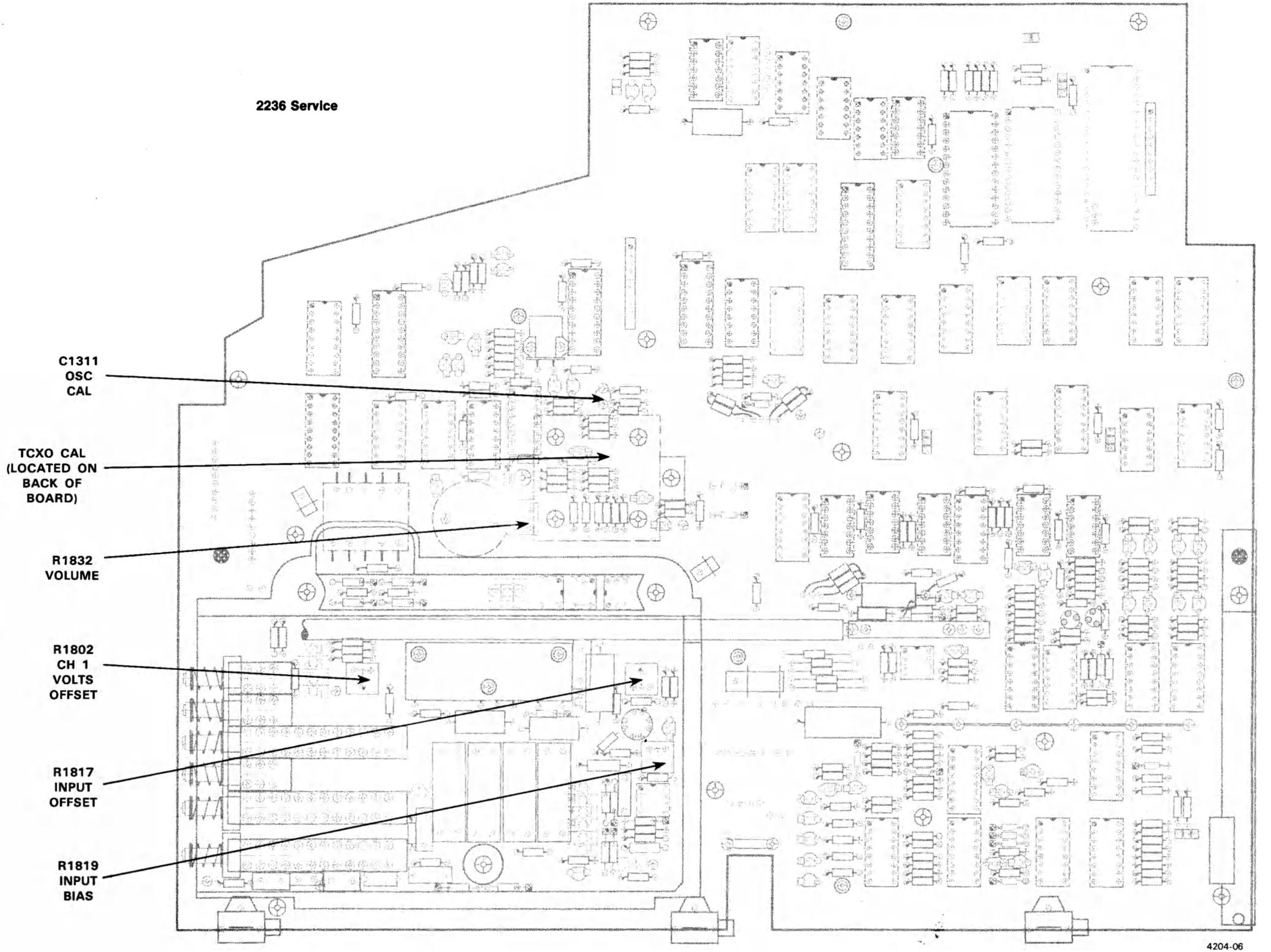

A10—COUNTER/TIMER/MULTIMETER BOARD ADJUSTMENT LOCATIONS

GENERAL NOTES

A. Use schematic diagrams, the overall block diagram, circuit board illustrations, and circuit descriptions when analyzing instrument malfunctions and locating test points. The schematic diagrams include typical waveforms and voltages that are intended as an aid in troubleshooting.

B. Always set the POWER switch to OFF and unplug the line cord before swapping, removing, or replacing components, and before connecting or disconnecting instrument leads and cables.

C. When analyzing circuit malfunctions, consider connectors and cables as possible causes of failure.

SPECIFIC NOTES

1. Set initial front-panel controls as follows:

POWER Switch	ON (button in)
A INTENSITY	Midrange
FOCUS	Midrange
Vertical POSITION	Midrange
VERTICAL MODE	CH 1
CH 1 VOLTS/DIV	0.1V
CH 1 VOLTS/DIV Variable	Cal detent
CH 1 AC-GND-DC	GND
Horizontal POSITION	Midrange
HORIZONTAL MODE	A
A SEC/DIV	0.1ms
A SEC/DIV Variable	Cal detent
X10 Magnifier	Off (knob in)
A TRIGGER Mode	P-P AUTO
A&B INT	VERT MODE
A SOURCE	INT

2. Verify the low-voltage power supplies at the following test points:

SUPPLY	TEST POINT	TOLERANCE
+5.0V	W968	4.85 to 5.15V
+8.6V	W960	8.43 to 8.77V
-8.6V	TP961	-8.56 to -8.64V
+30V	W956	29.1 to 30.9V
+100V	W954	97 to 103V

NOTE

A HV probe is required to measure the -2kV supply. Turn off the power and make the test equipment connections to the oscilloscope. Set the voltmeter to read at least -3kV, then turn the oscilloscope power back on to take the reading. After obtaining the reading, turn off the oscilloscope power to disconnect the test equipment connections, and replace the crt socket cover.

Verify the -2kV supply at pin 2 of the crt socket. The voltage should be between -1900 and -2100V.

3.

WARNING

The Preregulator and Inverter circuits have a floating common reference with respect to chassis ground. Ac-source potential is present on the common reference points. Connect the instrument to the ac-power source through an isolation transformer to prevent the possibility of personal injury or equipment damage when troubleshooting these circuits.

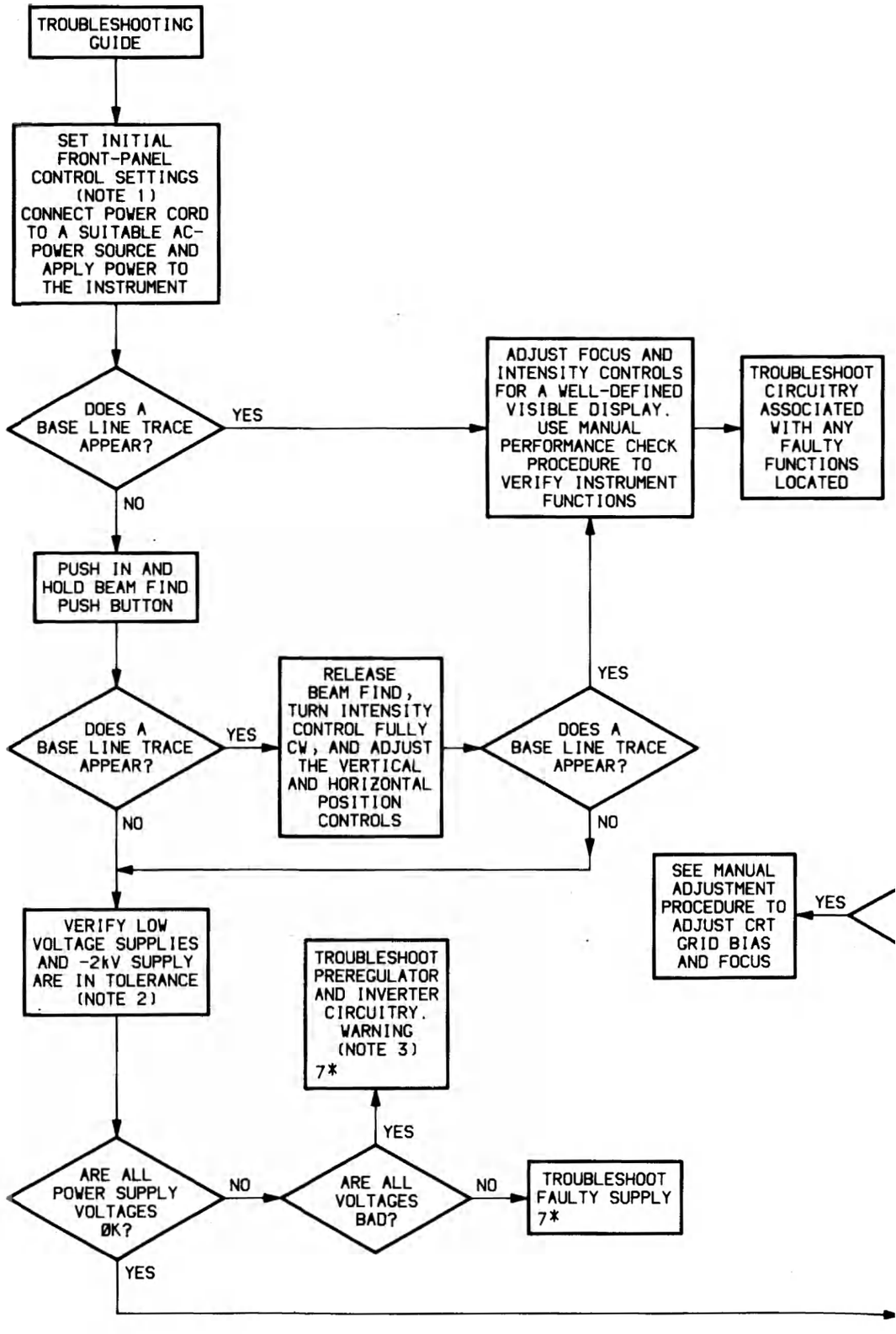

* NUMBER INDICATES SCHEMATIC DIAGRAM

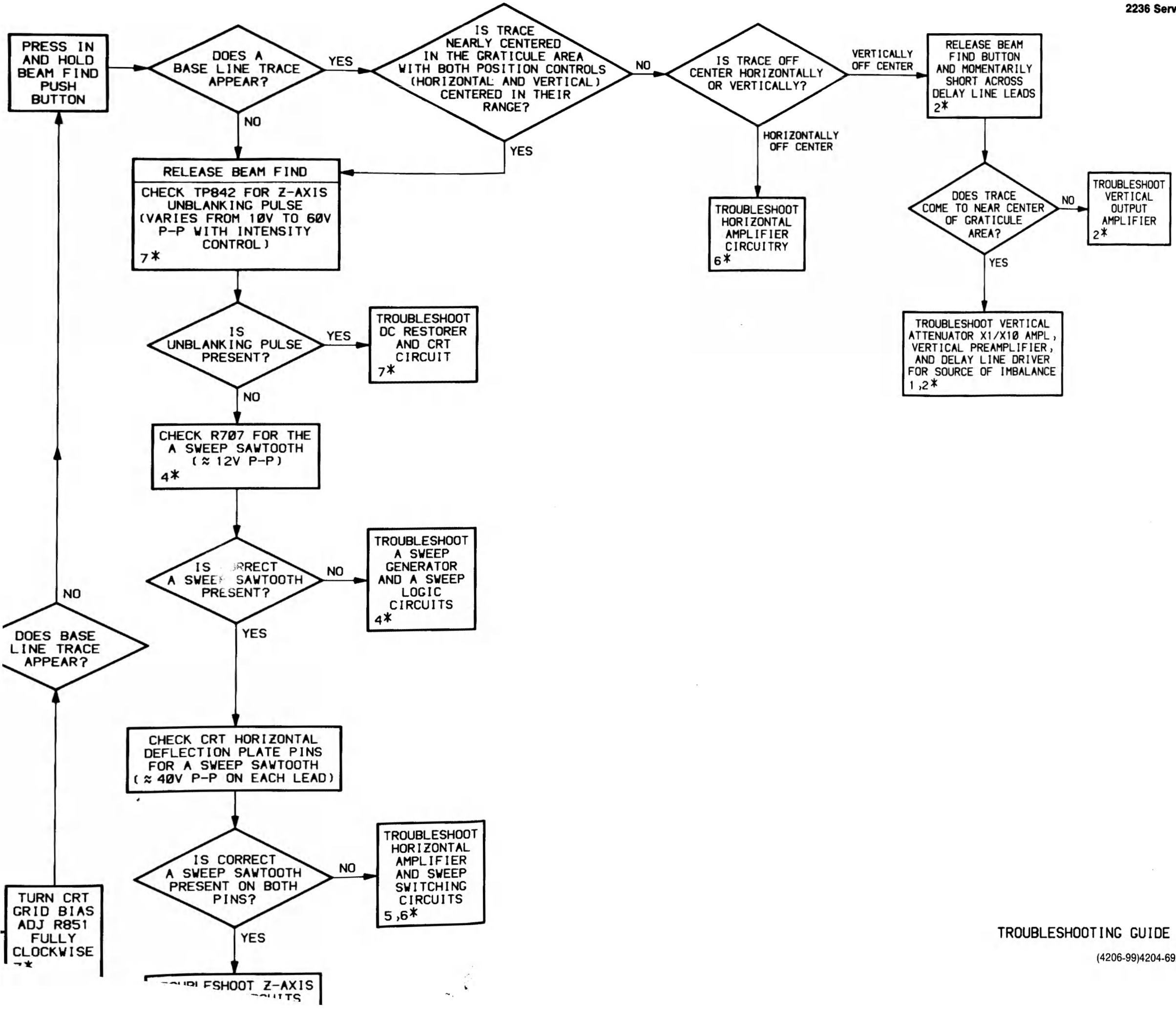

TROUBLESHOOTING GUIDE

(4206-99)4204-69A

REPLACEABLE MECHANICAL PARTS

PARTS ORDERING INFORMATION

Replacement parts are available from or through your local Tektronix, Inc. Field Office or representative.

Changes to Tektronix instruments are sometimes made to accommodate improved components as they become available, and to give you the benefit of the latest circuit improvements developed in our engineering department. It is therefore important, when ordering parts, to include the following information in your order: Part number, instrument type or number, serial number, and modification number if applicable.

If a part you have ordered has been replaced with a new or improved part, your local Tektronix, Inc. Field Office or representative will contact you concerning any change in part number.

Change information, if any, is located at the rear of this manual.

ITEM NAME

In the Parts List, an Item Name is separated from the description by a colon (:). Because of space limitations, an Item Name may sometimes appear as incomplete. For further Item Name identification, the U.S. Federal Cataloging Handbook H6-1 can be utilized where possible.

FIGURE AND INDEX NUMBERS

Items in this section are referenced by figure and index numbers to the illustrations.

INDENTATION SYSTEM

This mechanical parts list is indented to indicate item relationships. Following is an example of the indentation system used in the description column.

1 2 3 4 5 Name & Description

Assembly and/or Component
Attaching parts for Assembly and/or Component
••••END ATTACHING PARTS••••
Detail Part of Assembly and/or Component
Attaching parts for Detail Part
••••END ATTACHING PARTS••••
Parts of Detail Part
Attaching parts for Parts of Detail Part
••••END ATTACHING PARTS••••

Attaching Parts always appear in the same indentation as the item it mounts, while the detail parts are indented to the right. Indented items are part of, and included with, the next higher indentation.

Attaching parts must be purchased separately, unless otherwise specified.

ABBREVIATIONS

"	INCH
#	NUMBER SIZE
ACTR	ACTUATOR
ADPTR	ADAPTER
ALIGN	ALIGNMENT
AL	ALUMINUM
ASSEM	ASSEMBLED
ASSY	ASSEMBLY
ATTEN	ATTENUATOR
AWG	AMERICAN WIRE GAGE
BD	BOARD
BRKT	BRACKET
BRS	BRASS
BRZ	BRONZE
BSHG	BUSHING
CAB	CABINET
CAP	CAPACITOR
CER	CERAMIC
CHAS	CHASSIS
CKT	CIRCUIT
COMP	COMPOSITION
CONN	CONNECTOR
COV	COVER
CPLG	COUPLING
CRT	CATHODE RAY TUBE
DEG	DEGREE
DWR	DRAWER
ELCTRN	ELECTRON
ELEC	ELECTRICAL
ELCTLT	ELECTROLYTIC
ELEM	ELEMENT
EPL	ELECTRICAL PARTS LIST
EQPT	EQUIPMENT
EXT	EXTERNAL
FIL	FILLISTER HEAD
FLEX	FLEXIBLE
FLH	FLAT HEAD
FLTR	FILTER
FR	FRAME or FRONT
FSTNR	FASTENER
FT	FOOT
FXD	FIXED
GSKT	GASKET
HDL	HANDLE
HEX	HEXAGON
HEX HD	HEXAGONAL HEAD
HEX SOC	HEXAGONAL SOCKET
HLCPS	HELICAL COMPRESSION
HLEXT	HELICAL EXTENSION
HV	HIGH VOLTAGE
IC	INTEGRATED CIRCUIT
ID	INSIDE DIAMETER
IDENT	IDENTIFICATION
IMPLR	IMPELLER
IN	INCH
INCAND	INCANDESCENT
INSUL	INSULATOR
INTL	INTERNAL
LPHLDR	LAMPHOLDER
MACH	MACHINE
MECH	MECHANICAL
MTG	MOUNTING
NIP	NIPPLE
NON WIRE	NOT WIRE WOUND
OBD	ORDER BY DESCRIPTION
OD	OUTSIDE DIAMETER
OVH	OVAL HEAD
PH BRZ	PHOSPHOR BRONZE
PL	PLAIN or PLATE
PLSTC	PLASTIC
PN	PART NUMBER
PNH	PAN HEAD
PWR	POWER
RCPT	RECEPTACLE
RES	RESISTOR
RGD	RIGID
RLF	RELIEF
RTNR	RETAINER
SCH	SOCKET HEAD
SCOPE	OSCILLOSCOPE
SCR	SCREW
SE	SINGLE END
SECT	SECTION
SEMICOND	SEMICONDUCTOR
SHLD	SHIELD
SHLDR	SHOULDERED
SKT	SOCKET
SL	SLIDE
SLFLKG	SELF-LOCKING
SLVG	SLEEVING
SPR	SPRING
SQ	SQUARE
SST	STAINLESS STEEL
STL	STEEL
SW	SWITCH
T	TUBE
TERM	TERMINAL
THD	THREAD
THK	THICK
TNSN	TENSION
TPG	TAPPING
TRH	TRUSS HEAD
V	VOLTAGE
VAR	VARIABLE
W/	WITH
WSHR	WASHER
XFMR	TRANSFORMER
XSTR	TRANSISTOR

CROSS INDEX - MFR. CODE NUMBER TO MANUFACTURER

Mfr. Code	Manufacturer	Address	City, State, Zip Code
00779	AMP INC	P O BOX 3608	HARRISBURG PA 17105
01536	TEXTRON INC		ROCKFORD IL 61108
	CAMCAR DIV	1818 CHRISTINA ST	
	SEMS PRODUCTS UNIT		
06383	PANDUIT CORP	17301 RIDGELAND	TINLEY PARK IL 60477
06915	RICHCO PLASTIC CO	5825 N TRIPP AVE	CHICAGO IL 60646
09772	NEST COAST LOCKWASHER CO INC	16730 E JOHNSON DRIVE	CITY OF INDUSTRY CA 91744
		P O BOX 3588	
09922	BURNDY CORP	RICHARDS AVE	NORWALK CT 06852
12327	FREEWAY CORP	9301 ALLEN DR	CLEVELAND OH 44125
13511	AMPHENOL CADRE DIV BUNKER RAMO CORP		LOS GATOS CA
16428	BELDEN CORP	2200 US HWY 27 SOUTH	RICHMOND IN 47374
	ELECTRONIC DIV	P O BOX 1980	
18680	HIGHLAND MFG CO THE DIV OF		
	BUELL INDUSTRIES INC		
22526	DU PONT E I DE NEMOURS AND CO INC	30 HUNTER LANE	CAMP HILL PA 17011
	DU PONT CONNECTOR SYSTEMS		
24931	SPECIALTY CONNECTOR CO INC	2620 ENDRESS PLACE	GREENWOOD IN 46142
		P O BOX D	
70903	BELDEN CORP	2000 S BATAVIA AVE	GENEVA IL 60134
71400	BUSSMANN MFG CO	114 OLD STATE RD	ST LOUIS MO 63178
	MCGRAW EDISION CO	PO BOX 14460	
73743	FISCHER SPECIAL MFG CO	446 MORGAN ST	CINCINNATI OH 45206
75272	KMC STAMPING	1219 S. PART ST.	PORT WASHINGTON, WI 53074
	DIV. OF KICKHAEFER MFG CO		
78189	ILLINOIS TOOL WORKS INC	ST CHARLES ROAD	ELGIN IL 60120
	SHAKEPROOF DIVISION		
80009	TEKTRONIX INC	4900 S W GRIFFITH DR	BEAVERTON OR 97077
		P O BOX 500	
83385	MICRODOT MANUFACTURING INC	3221 W BIG BEAVER RD	TROY MI 48098
	GREER-CENTRAL DIV		
86113	MICRODOT MFG INC CENTRAL SCREW-	149 EMERALD ST	KEENE NH 03431
	KEENE DIV		
86928	SEASTROM MFG CO INC	701 SONORA AVE	GLENDALE CA 91201
93907	TEXTRON INC	600 18TH AVE	ROCKFORD IL 61101
	CAMCAR DIV		
S3109	FELLER ASA ADOLF AG	355 TESCONI CIRCLE	SANTA ROSA CA 95401
	C/O PANEL COMPONENTS CORP		
S3629	SCHURTER AG H	2015 SECOND STREET	BERKELEY CA 94170
	C/O PANEL COMPONENTS CORP		
TK11392	NORTHWEST FASTENER SALES INC	7923 SW CIRRUS DRIVE	BEAVERTON OR 97005
TK0861	H SCHURTER AG DIST PANEL COMPONENTS	2015 SECOND STREET	BERKELEY CA 94170
TK0869	EYELEMATIC MFG	BOX N SEEMAR RD	WATERTOWN CT 06795
TK1336	PARSONS MFG CORP	1055 OBRIEN	MENLO PARK CA 94025
TK1373	PATELEC-CEM (ITALY)	10156 TORINO	VAICENTALLO 62/45S ITALY
TK1543	CAMCAR/TEXTRON	516 18TH AVE	ROCKFORD IL 61101

Fig. & Index No.	Tektronix Part No.	Serial/Assembly No. Effective	Dscont	Qty	12345 Name & Description	Mfr. Code	Mfr. Part No.
1-1	334-5001-05			1	MARKER,IDENT:MKD CAUTION	80009	334-5001-05
-2	200-2538-06			1	COVER,REAR:PLASTIC,W/LABELS	80009	200-2538-06
	200-2538-11			1	COVER,REAR:PLASTIC W/BUMPER (OPTION 33 ONLY)	80009	200-2538-11
	343-1278-00	B022100		2	RTNR,POWER CORD:POLYCARBONATE GRAY ATTACHING PARTS	80009	343-1278-00
-3	211-0691-00	B010100	B022099	2	SCREW,MACHINE:6-32 X 0.625,PNH,STL	93907	ORDER BY DESCR
	211-0712-00	B022100		2	SCR,ASSEM WSHR:6-32 X 1.25,PNH,STL,TORX END ATTACHING PARTS	80009	211-0712-00
-4	213-0882-00			1	SCREW,TPG,TR:6-32 X 0.437 TAPTITE,PNH,STL	83385	ORDER BY DESCR
-5	253-0192-00	B010100	B013529	AR	TAPE,PRESS SENS:POLY SPONGE,0.375 X 0.062	80009	253-0192-00
	390-0790-05			1	CABINET,SCOPE:	80009	390-0790-05
-6	334-4714-01			1	.MARKER,IDENT:MKD HANDLE TAG	80009	334-4714-01
-7	367-0289-00			1	.HANDLE,CARRYING:13.855,SST ATTACHING PARTS	80009	367-0289-00
-8	212-0144-00			2	.SCREW,TPG,TF:8-16 X 0.562,PLASTITE,SPCL HD END ATTACHING PARTS	93907	225-38131-012
-9	390-0790-07			1	.CABINET,SCOPE:W/FEET	80009	390-0790-07
	211-0304-00			1	SCR,ASSEM WSHR:4-40 X 0.312,PNH,STL,T9	01536	ORDER BY DESCR
	390-0790-14			1	CABINET,SCOPE:W/BUMPER (OPTION 33 ONLY)	80009	390-0790-14
-10	348-0659-01	B010100	B020609	2	FOOT,CABINET:BLACK POLYURETHANE	80009	348-0659-01
	348-0659-00	B020610		2	FOOT,CABINET:BLACK POLYURETHANE	80009	348-0659-00

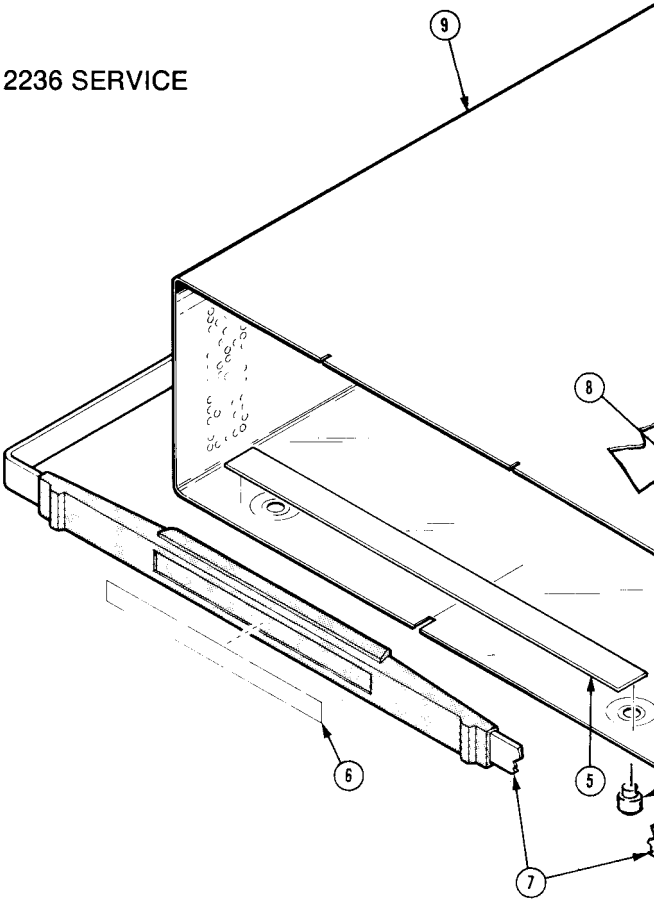
9
8
6
5
7

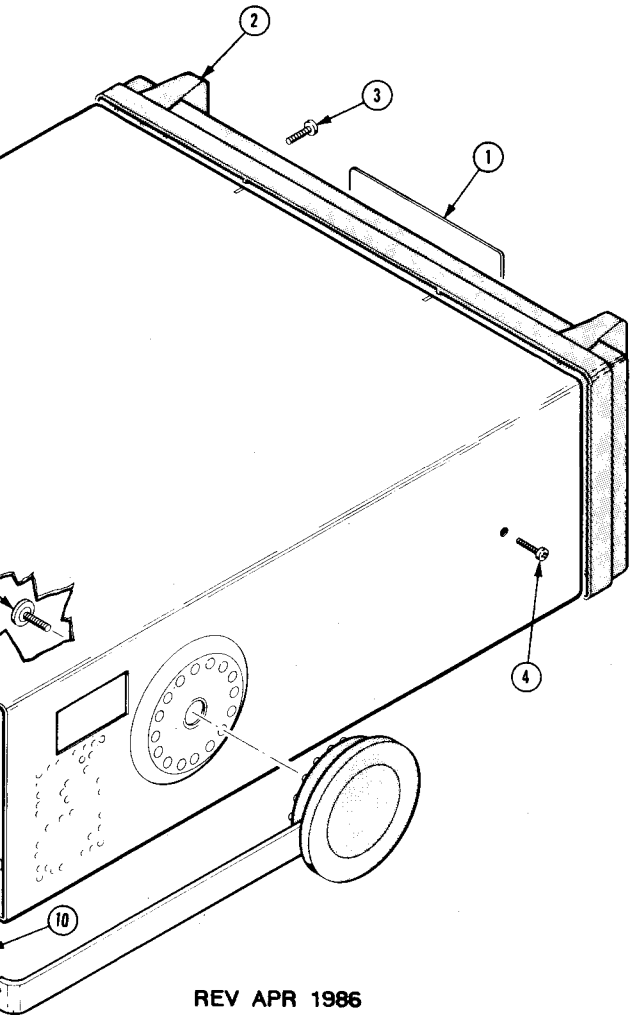

REV APR 1986

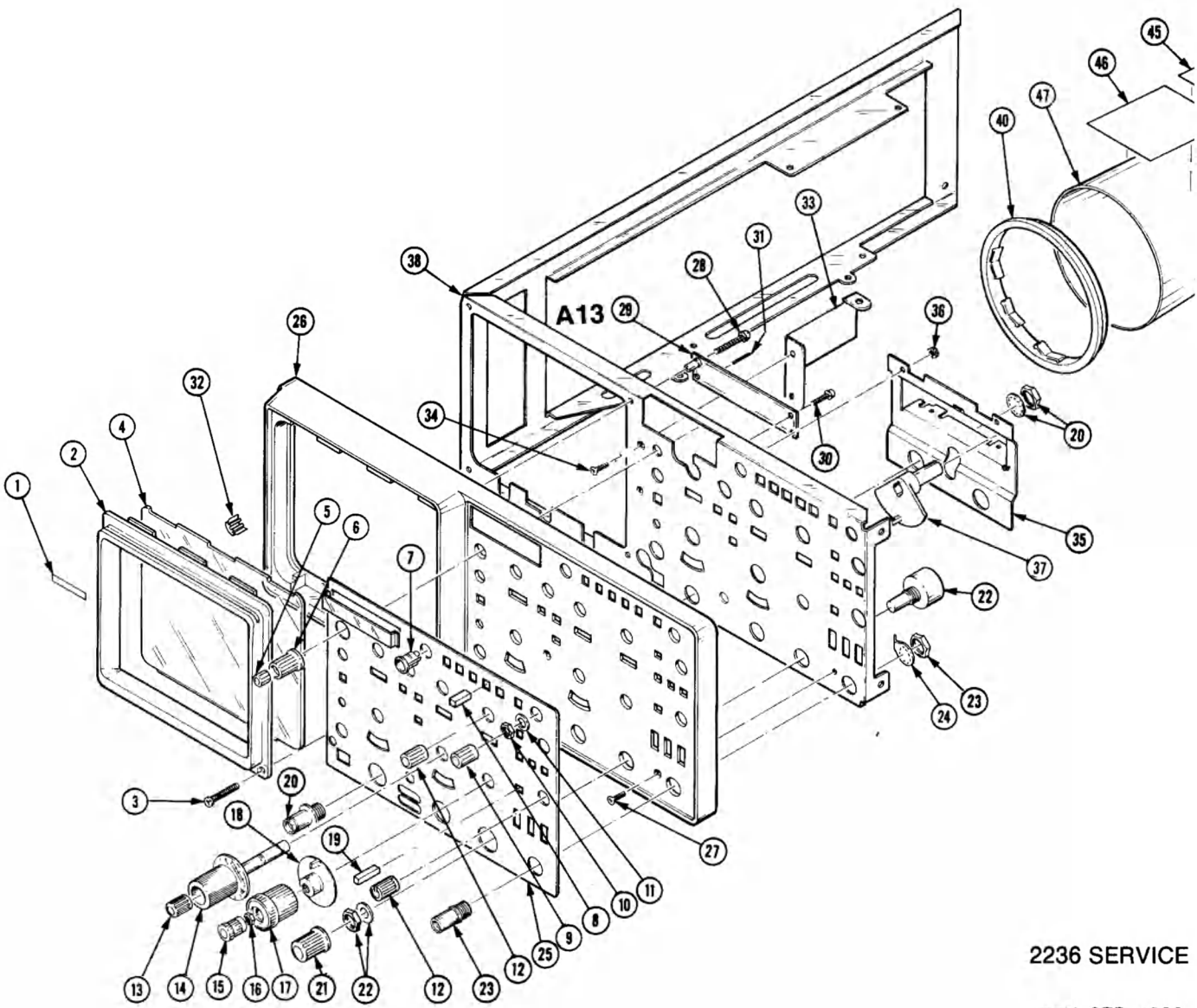
A13
1
2
3
4
5
6
7
8
9
10
11
12
13
14
15
16
17
18
19
20
21
22
23
24
25
26
27
28
29
30
31
32
33
34
35
36
37
38
40
45
46
47
56

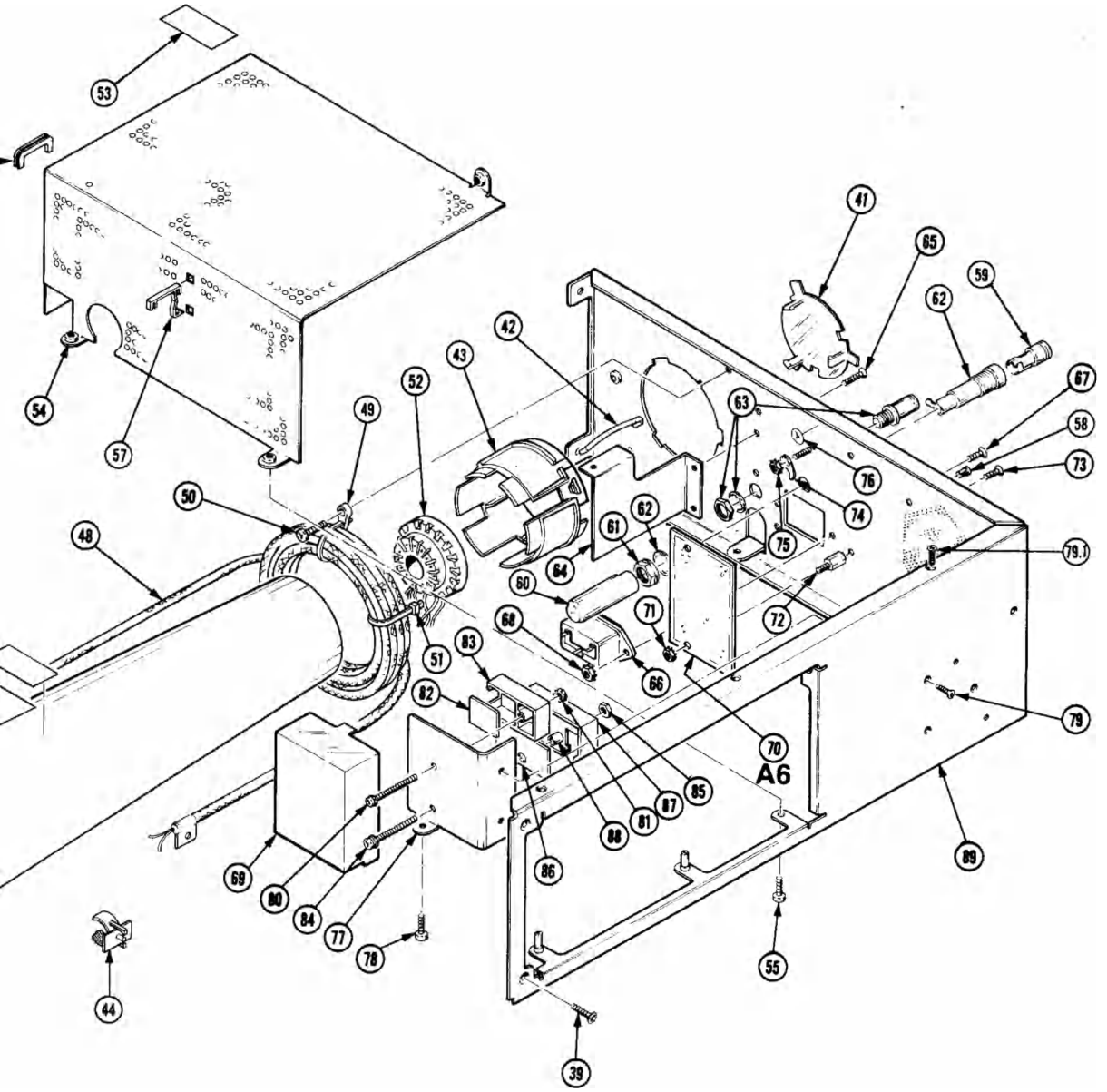
53
54
57
41
85
59
62
42
43
52
49
63
67
58
73
76
74
75
50
48
61
62
64
60
71
72
79.1
51
83
68
66
82
70
A6
79
87
85
81
88
86
69
80
84
77
78
89
44
55
39

Fig. & Index No.	Tektronix Part No.	Serial/Assembly No. Effective	Dscont	Qty	12345 Name & Description	Mfr. Code	Mfr. Part No.
2-1	334-5002-00			1	PLATE,IDENT:MKO TEKTRONIX	80009	334-5002-00
-2	426-1765-00	B010100	B016204	1	FRAME,CRT:POLYCARBONATE,GRAY	80009	426-1765-00
	426-1765-02	B016205		1	FRAME,CRT:POLYCARBONATE,GRAY	80009	426-1765-02
					ATTACHING PARTS		
-3	211-0690-01			2	SCREW,MACHINE:6-32 X 0.875 PNH,SST	86113	ORDER BY DESCR
					END ATTACHING PARTS		
-4	337-2775-00			1	SHLD,IMPLOSION:FILTER,BLUE 2211/2213/2215	80009	337-2775-00
-5	366-1391-03	B010100	B022974	1	KNOB:DOVE GRAY,0.081 ID X 0.28 OD X 0.32 H	80009	366-1391-03
	366-1391-04	B022975		1	KNOB:GRAY,0.3 OD X 0.14 ID X 0.32 H	80009	366-1391-04
-6	366-2146-03			1	KNOB:DOVE GRAY,0.235 ID X 0.5 OD X 0.531 H	80009	366-2146-03
-7	358-0550-00			2	BUSHING,SHAFT:0.15 ID X 0.488 L,PLSTC,0.3	80009	358-0550-00
-7.1	366-2028-00	B010100	B014069	1	KNOB:GRAY,DELTA TIME POSN,0.392 OD,0.475 H	80009	366-2028-00
-8	366-1512-05	B010100	B014269	5	PUSH BUTTON:GRAY,0.18 SQ X 0.83	80009	366-1512-05
	366-2079-01	B014270		5	PUSH BUTTON:MED GRAY,0.172 SQ	80009	366-2079-01
	366-1512-01	B010100	B014269	1	PUSH BUTTON:CHARCOAL GRAY,0.18 SQ X 0.83H	80009	366-1512-01
	366-2079-00	B014270		1	PUSH BUTTON:CHARCOAL GRAY,0.172 SQ	80009	366-2079-00
-9	366-1146-00			1	KNOB:GY,0.127 ID X 0.392 OD X 0.466 H	80009	366-1146-00
-10	210-0583-00			1	NUT,PLAIN,HEX:0.25-32 X 0.312,BRS CD PL	73743	2X-20319-402
-11	210-0021-00			1	WASHER,LOCK:0.476 ID,INTL,0.018 THK,STL	78189	1222-01
-12	366-2049-00	B010100	B011119	6	KNOB:GY,0.172 ID X 0.41 OD X 0.496 H W/BAR	80009	366-2049-00
	366-2049-01	B011120		6	KNOB:GY,0.172 ID X 0.41 OD X 0.496 H W/BAR	80009	366-2049-01
	377-0512-00			6	INSERT,KNOB:0.125 ID X 0.247 OD X 0.663,AL	80009	377-0512-00
-13	366-1031-03			2	KNOB:RED,CAL,0.127 ID X 0.392 OD X 0.466 H	80009	366-1031-03
-14	366-2148-01			2	KNOB:GY,VOLTS/DIV,0.72 OD,0.79 HW/0.25 DIA	80009	366-2148-01
-15	366-2052-01			1	KNOB:RED,CAL,0.127 ID X 0.45 OD X 0.456 H	80009	366-2052-01
-16	210-0583-00			1	NUT,PLAIN,HEX:0.25-32 X 0.312,BRS CD PL	73743	2X-20319-402
-17	366-1840-02	B010100	B013959	1	KNOB:GY,TIME/DIV,0.127 X 0.855 X 0.844	80009	366-1840-02
	366-1840-03	B013960	B019815	1	KNOB:GY,TIME/DIV,0.12710 X 0.85500 X 0.844H	80009	366-1840-03
	366-1840-04	B019816		1	KNOB:GY,TIME/DIV,0.12710 X 0.85500 X 0.844H	80009	366-1840-04
	213-0153-00	B019816		2	SETSCREW:5-40 X 0.125,STL	TK0392	ORDER BY DESCR
-18	366-1850-00			1	KNOB:CLEAR,0.252 ID X 1.2 OD X 0.383 H	80009	366-1850-00
-19	366-2013-00			9	PUSH BUTTON:DIRTY GRAY,0.134 SQ X 0.480 H	80009	366-2013-00
-19.1	384-1575-00	B014070		1	EXTENSION SHAFT:8.805 L,W/KNOB,PLASTIC	80009	384-1575-00
-20	131-0679-02			1	CONN,RCPT,ELEC:BNC,MALE,3 CONTACT	24931	28JR270-1
	131-0126-00			1	CONN,RCPT,ELEC:BNC,FEMALE	24931	28JR205-2
-21	366-2020-01			1	KNOB:0.252 ID X 0.581 OD X 0.612H W/SET SCR	80009	366-2020-01
-22	----- -----			1	RES,VAR:		
	210-0012-00			1	WASHER,LOCK:0.384 ID,INTL,0.022 THK,STL	09772	ORDER BY DESCR
	210-0241-00			1	TERMINAL,LUG:0.515 ID,PLAIN,STL CD PL	80009	210-0241-00
	210-0413-00			1	NUT,PLAIN,HEX:0.375-32 X 0.5,BRS CD PL	73743	3145-402
	210-0802-00			1	WASHER,FLAT:0.15 ID X 0.312 OD X 0.032,STL	12327	ORDER BY DESCR
	384-1323-00			1	EXTENSION SHAFT:6.4 L X 0.081 OD,SST	80009	384-1323-00
-23	131-0955-00			1	CONN,RCPT,ELEC:BNC,FEMALE	13511	31-279
-24	210-0255-00			1	TERMINAL,LUG:0.391 ID,LOCKING,BRS CD PL	12327	ORDER BY DESCR
-25	333-2700-00			1	PANEL,FRONT:	80009	333-2700-00
	175-6140-00			1	CA ASSY,SP,ELEC:5,26 AWG,6.0 L,RIBBON	80009	175-6140-00
-26	386-4850-00	B010100	B018179	1	SUBPANEL,FRONT: POLYCARBONATE,2200 SERIES	80009	386-4850-00
	386-4850-03	B018180		1	SUBPANEL,FRONT:	80009	386-4850-03
					ATTACHING PARTS		
-27	213-0881-00			3	SCREW,TPG,TR:6-32 X 0.25 TYPE TT,FILH,STL	83385	ORDER BY DESCR
-28	213-0927-00			1	SCREW,TPG,TR:6-32 X 0.875,TYPE TT,PNH,STL	TK1543	ORDER BY DESCR
	210-0601-00			1	EYELET,METALLIC:0.183 OD X 0.192 L,BRASS	18680	77362
	213-0882-00			3	SCREW,TPG,TR:6-32 X 0.437 TAPTITE,PNH,STL	83385	ORDER BY DESCR
					END ATTACHING PARTS		
-29	----- -----			1	CKT BOARD ASSY:DISPLAY(SEE A13 REPL)		
					ATTACHING PARTS		
-30	213-0926-00			1	SCREW,TPG,TR:4-40 X 0.5,TYPE TT,PNH,STL	TK1543	829-07625
					END ATTACHING PARTS		
					CKT BOARD ASSY INCLUDES:		
-31	131-0608-00			2	.TERMINAL,PIN:0.365 L X 0.025 BRZ GLD PL	22526	48283-036
					.(ALSO SEE A13P2000,P2050 REPL)		
	361-1176-00			1	.SPACER,SLEEVE:0.428 L X 0.144 ID,BRASS	80009	361-1176-00
-32	348-0660-00			4	CUSHION,CRT:POLYURETHANE	80009	348-0660-00
-33	407-2869-00			1	BRKT,CHAS MTG:DMM CKT BD,FRONT,ALUMINUM	80009	407-2869-00
					ATTACHING PARTS		
-34	213-0881-00			2	SCREW,TPG,TR:6-32 X 0.25 TYPE TT,FILH,STL	83385	ORDER BY DESCR
					END ATTACHING PARTS		

Fig. & Index No.	Tektronix Part No.	Serial/Assembly No. Effective	Dscont	Qty	12345 Name & Description	Mfr. Code	Mfr. Part No.
2-35	407-2824-00	B010100	B014199	1	BRACKET,GROUND:PANEL,STEEL	80009	407-2824-00
	407-3217-00	B014200		1	BRACKET,GROUND:ALUMINUM	80009	407-3217-00
					ATTACHING PARTS		
-36	210-0586-00			2	NUT,PL,ASSEM WA:4-40 X 0.25,STL CD PL	78189	211-041800-00
	211-0304-00	B010900	B012239	1	SCR,ASSEM WSHR:4-40 X 0.312,PNH,STL,T9	01536	ORDER BY DESCR
					END ATTACHING PARTS		
	407-3163-00	B010900	B012239	1	BRACKET,INPUT:GROUND,AL	80009	407-3163-00
	342-0678-00	B010900	B012239	1	INSULATOR,ELEC:0.300 X 0.700,MYLAR	80009	342-0678-00
	210-1039-00	B010900	B012239	1	WASHER,LOCK:0.521 ID,INT,0.025 THK,SST	24931	ORDER BY DESCR
-37	214-3375-00			2	LEVER,SWITCH:AC-GND-DC,PLASTIC	80009	214-3375-00
-38	441-1631-00	B010100	B015764	1	CHASSIS,SCOPE:FRONT	80009	441-1631-00
	441-1571-00	B015765		1	CHASSIS,SCOPE:FRONT,L FRAME	80009	441-1571-00
					ATTACHING PARTS		
-39	213-0881-00			4	SCREW,TPG,TR:6-32 X 0.25 TYPE TT,FILH,STL	83385	ORDER BY DESCR
					END ATTACHING PARTS		
	344-0367-00	B016638	B018643	4	CLIP,GROUND:CU-BE	80009	344-0367-00
	344-0367-00	B018644		5	CLIP,GROUND:CU-BE	80009	344-0367-00
-40	386-4443-00			1	SUPPORT,SHIELD:CRT,FRONT,PLASTIC	80009	386-4443-00
-41	200-2519-00			1	CAP,CRT SOCKET:NATURAL LEXAN	80009	200-2519-00
-42	214-1061-05			1	SPRING,GROUND:PLATED	80009	214-1061-05
-43	426-1766-00			1	MOUNT,RESILIENT:CRT,REAR	80009	426-1766-00
-44	344-0347-00			1	CLIP,ELECTRICAL:ANODE,0.72 OD,NYLON	80009	344-0347-00
-45	334-1379-00			1	MARKER,IDENT:WKD HI VACUUM	80009	334-1379-00
-46	334-1951-00			1	MARKER,IDENT:WKD WARNING,CRT VOLTAGES	80009	334-1951-00
-47	337-2774-00			1	SHIELD,ELEC:CRT,STEEL	80009	337-2774-00
-48	----- -----			1	DELAY LINE,ELEC:(SEE DL9210 CHASSIS REPL)		
	131-2798-00	B010100	B026999	2	.CONTACT,ELEC:BRASS,TIN	80009	131-2798-00
	210-1426-00	B027000		2	EYELET,METALLIC:0.2 ID X 0.345 L,BRS	TK0869	ORDER BY DESCR
	343-1309-00	B027000		2	CLAMP,CABLE:0.25 DIA,STEEL	75272	ORDER BY DESCR
	210-0802-00	B010100		1	WASHER,FLAT:0.15 ID X 0.312 OD X 0.032,STL	12327	ORDER BY DESCR
-49	346-0121-00			AR	STRAP,TIEDOWN,E:6.125 L,NYLON	06383	PLC1.5I-S8
					ATTACHING PARTS		
-50	213-0882-00			2	SCREW,TPG,TR:6-32 X 0.437 TAPTITE,PNH,STL	83385	ORDER BY DESCR
					END ATTACHING PARTS		
-51	346-0128-00			1	STRAP,TIEDOWN,E:8.0 L X 0.1 W,NYLON	80009	346-0128-00
-52	136-0202-08	B010100	B015570	1	SKT,PL-IN ELEK:ELECTRON TUBE,14 CONTACT	80009	136-0202-08
	136-0830-00	B015571		1	SKT,PL-IN ELEK:CRT SOCKET ASSY	80009	136-0830-00
	343-0549-00	B013460		1	STRAP,TIEDOWN,E:0.091 W X 4.0 L,ZYTEL	06383	PLT1M
-53	334-4251-00			1	MARKER,IDENT:WKD CAUTION	80009	334-4251-00
-54	337-2772-00			1	SHIELD,ELEC:POWER SUPPLY,AL	80009	337-2772-00
					ATTACHING PARTS		
-55	211-0304-00			3	SCR,ASSEM WSHR:4-40 X 0.312,PNH,STL,T9	01536	ORDER BY DESCR
					END ATTACHING PARTS		
-56	348-0555-00			1	GROMMET,PLASTIC:SIL GY,U SHAPE,0.52 ID	80009	348-0555-00
-57	344-0334-00			1	CLIP,CIRCUIT BD:PLASTIC	80009	344-0334-00
-58	213-0926-00			2	SCREW,TPG,TR:4-40 X 0.5,TYPE TT,PNH,STL	TK1543	829-07625
	361-1255-00			1	SPACER,FAN:PLASTIC	80009	361-1255-00
-59	200-2264-00			1	CAP,FUSEHOLDER:3AG FUSES	S3629	FEK 031 1666
	159-0041-00			1	FUSE,CARTRIDGE:3AG,1.25A,250V,20SEC	71400	MSL 1 1/4
-60	200-1388-03			1	COVER,FUSE LEAD:POLYURETHANE	80009	200-1388-03
-61	204-0833-00			1	BODY,FUSEHOLDER:3AG & 5 X 20MM FUSES	TK0861	031 1653 (FEU)
-62	210-1039-00			1	WASHER,LOCK:0.521 ID,INT,0.025 THK,SST	24931	ORDER BY DESCR
-63	131-0955-00			1	CONN,RCPT,ELEC:BNC,FEMALE	13511	31-279
-64	407-2870-00			1	BRKT,CHAS MTG:DMM CKT BD,REAR,ALUMINUM	80009	407-2870-00
					ATTACHING PARTS		
-65	213-0881-00			2	SCREW,TPG,TR:6-32 X 0.25 TYPE TT,FILH,STL	83385	ORDER BY DESCR
					END ATTACHING PARTS		
-66	----- -----			1	FILTER,RFI:(SEE FL9001 CHASSIS REPL)		
					ATTACHING PARTS		
-67	211-0323-00	B010100	B019702	2	SCREW,MACHINE:4-40 X 0.312,FLH,100 DEG,STL	83385	ORDER BY DESCR
	211-0380-00	B019703		2	SCREW,MACHINE:4-40 X 0.375,FLH,CD PL,T-9	80009	211-0380-00
-68	210-0583-00			2	NUT,PLAIN,HEX:0.25-32 X 0.312,BRS CD PL	73743	2X-20319-402
					END ATTACHING PARTS		
-69	200-2845-00			1	COVER,CKT BD:LINE FILTER	80009	200-2845-00
-70	----- -----			1	CKT BOARD ASSY:EMI FILTER(SEE A6 REPL)		
					ATTACHING PARTS		
-71	210-0586-00			2	NUT,PL,ASSEM WA:4-40 X 0.25,STL CD PL	78189	211-041800-00

Fig. & Index No.	Tektronix Part No.	Serial/Assembly No. Effective	Dscont	Qty	12345	Name & Description	Mfr. Code	Mfr. Part No.
2-						END ATTACHING PARTS		
-72	129-0339-00			2		SPACER,POST:0.28L,4-40 TAP/STUD,BRS,HEX	80009	129-0339-00
						ATTACHING PARTS		
-73	211-0303-00	B010100	B019702	4		SCREW,MACHINE:4-40 X 0.25,FLH 100 DEG,STL	93907	ORDER BY DESCR
	211-0379-00	B019703		4		SCREW,MACHINE:4-40 X 0.312,FLH,CD PL,T-9	80009	211-0379-00
						END ATTACHING PARTS		
-74	210-0202-00			1		TERMINAL,LUG:0.146 ID,LOCKING,BRZ TIN PL	86928	A-373-158-2
						ATTACHING PARTS		
-75	210-0457-00			1		NUT,PL,ASSEM WA:6-32 X 0.312,STL CD PL	78189	511-061800-00
						END ATTACHING PARTS		
-76	334-3379-02			1		MARKER,IDENT:MARKED GROUND SYMBOL	80009	334-3379-02
-77	407-2729-00			1		BRACKET,HEAT SK:ALUMINUM	80009	407-2729-00
						ATTACHING PARTS		
-78	211-0304-00			1		SCR,ASSEM WSHR:4-40 X 0.312,PNH,STL,T9	01536	ORDER BY DESCR
-79	211-0303-00	B010100	B019702	2		SCREW,MACHINE:4-40 X 0.25,FLH 100 DEG,STL	93907	ORDER BY DESCR
	211-0379-00	B019703		2		SCREW,MACHINE:4-40 X 0.312,FLH,CD PL,T-9	80009	211-0379-00
						END ATTACHING PARTS		
-79.1	211-0303-00	B010100	B019702	3		SCREW,MACHINE:4-40 X 0.25,FLH 100 DEG,STL	93907	ORDER BY DESCR
	211-0379-00	B019703		3		SCREW,MACHINE:4-40 X 0.312,FLH,CD PL,T-9	80009	211-0379-00
-80	211-0302-00			1		SCR,ASSEM WSHR:4-40 X 0.75,PNH,STL,TORX DR	01536	ORDER BY DESCR
-81	210-0586-00			1		NUT,PL,ASSEM WA:4-40 X 0.25,STL CD PL	78189	211-041800-00
-82	342-0582-00			1		INSULATOR,PLATE:TRANSISTOR,CERAMIC	80009	342-0582-00
-83	343-1025-00			1		RETAINER,XSTR:	80009	343-1025-00
-84	211-0691-00			1		SCREW,MACHINE:6-32 X 0.625,PNH,STL	93907	ORDER BY DESCR
-85	210-0408-00			1		NUT,PLAIN,HEX:6-32 X 0.312,BRS CD PL	73743	3040-402
-86	342-0555-00			1		INSULATOR,PLATE:HEAT SINK,ALUMINA	80009	342-0555-00
-87	343-0969-00			1		RETAINER,XSTR:	80009	343-0969-00
-88	361-1047-00			1		SPACER,VAR RES:0.3 X 0.615 X 0.55,PLSTC	80009	361-1047-00
	119-0830-09	B010100	B011499	1		FAN,TUBEAXIAL:12VDC,2.4W,6500 RPM,37 CFM BR	80009	119-0830-09
						USHLESS DC MOTOR WITH CONNECTORS		
	119-0830-10	B011500	B019719	1		FAN,TUBEAXIAL:12VDC,2.4W,6500RPM,37CFM	80009	119-0830-10
-89	441-1536-01			1		CHASSIS,SCOPE:REAR,L FRAME	80009	441-1536-01
	343-0549-00	B010800	B019719	2		STRAP,TIEDOWN,E:0.091 W X 4.0 L,ZYTEL	06383	PLT1W
	----- -----			1		.FAN:		
						.(SEE B9965 CHASSIS REPL)		
	131-0707-00	B010100	B019719	2		.CONTACT,ELEC:22-26 AWG,BRS,CU BE GLD PL	22526	47439-000
	352-0169-00	B010100	B019719	1		.HLDR,TERM CONN:2 WIRE,BLACK	80009	352-0169-00
	361-1255-00	B010100	B011499	1		.SPACER,FAN:PLASTIC	80009	361-1255-00
	361-1255-01	B011500	B019719	1		.SPACER,FAN:PLASTIC	80009	361-1255-01
	361-1255-02	B019720		1		.SPACER,FAN:PLASTIC	80009	361-1255-02
	210-0586-00	B010100	B019719	2		.NUT,PL,ASSEM WA:4-40 X 0.25,STL CD PL	78189	211-041800-00
	211-0336-00	B010100	B019719	2		.SCREW,MACHINE:4-40 X 0.875,FLH,100 DEG,STL	80009	211-0336-00

Fig. & Index No.	Tektronix Part No.	Serial/Assembly No. Effective	Dscont	Qty	12345 Name & Description	Mfr. Code	Mfr. Part No.
3-1	384-1136-00	B010100	B014269	6	EXTENSION SHAFT:0.95 INCH LONG	80009	384-1136-00
					CKT BOARD:HOT SIGNAL SWITCH BOARD		
					(SOLDERED TO SWITCHES:SEE A10S1801A-E AND		
					.A10S1802 REPL)		
-2	384-1575-00			1	EXTENSION SHAFT:8.805 L,W/KNOB,PLASTIC	80009	384-1575-00
					(FOR CORRECT PLACEMENT SEE FIG. 2)		
-3	----- -----			1	CA ASSY,SP,ELEC:(SEE A10W2000 REPL)		
-4	----- -----			1	CA ASSY,SP,ELEC:(SEE A10W2050 REPL)		
-5	337-2961-00			1	SHIELD,ELEC:CIRCUIT BOARD,ALUMINUM	80009	337-2961-00
					ATTACHING PARTS		
-6	211-0302-00			2	SCR,ASSEM WSHR:4-40 X 0.75,PNH,STL,TORX DR	01536	ORDER BY DESCR
					END ATTACHING PARTS		
-7	334-4811-00			1	MARKER,IDENT:WKD DANGER	80009	334-4811-00
-8	342-0592-00	B010100	B014069	1	INSULATOR,BOX:	80009	342-0592-00
	342-0592-03	B014070		1	INSULATOR,BOX:POLYCARBONATE	80009	342-0592-03
					ATTACHING PARTS		
-9	211-0332-00			6	SCR,ASSEM WSHR:4-40 X 0.5,PNH,STL,T9	01536	ORDER BY DESCR
					(3 ATTACH 342-0592-00/3 SECURE HINGED ASSY		
					TO CHASSIS BRKTS & SHIELD)		
					END ATTACHING PARTS		
-10	211-0304-00			5	SCR,ASSEM WSHR:4-40 X 0.312,PNH,STL,T9	01536	ORDER BY DESCR
	131-3054-00			1	CONN ASSY,ELEC:DMM INPUT,JACK TIP	80009	131-3054-00
-11	334-4444-00			1	MARKER,IDENT:WKD DMM INPUT CONNECTORS	80009	334-4444-00
	195-0970-00	B010100	B014069	1	.LEAD,ELECTRICAL:26 AWG,3.0 L,0-N	80009	195-0970-00
-12	352-0655-00			1	HOLDER,CONN:	80009	352-0655-00
					ATTACHING PARTS		
-13	213-0926-00			1	SCREW,TPG,TR:4-40 X 0.5,TYPE TT,PNH,STL	TK1543	829-07625
					END ATTACHING PARTS		
-14	334-4809-00			1	MARKER,IDENT:WKD CAUTION	80009	334-4809-00
-15	441-1636-00			1	CHASSIS,CKT BD:ALUMINUM	80009	441-1636-00
-16	213-0926-00			1	SCREW,TPG,TR:4-40 X 0.5,TYPE TT,PNH,STL	TK1543	829-07625
-17	361-1191-00			1	SPACER,CKT BD:0.222 X 0.125 X 0.25,	80009	361-1191-00
-18	----- -----			1	CKT BOARD ASSY:MULTIMETER CONTROL		
					(SEE A12 REPL)		
-19	131-0592-00			16	.TERMINAL,PIN:0.885 L X 0.025 SQ BRS	80009	131-0592-00
-20	----- -----			1	CKT BOARD ASSY:COUNTER/TIMER/MULTIMETER		
					(SEE A10 REPL)		
-21	343-1098-00			1	.RETAINER,CKT BD:PLASTIC	80009	343-1098-00
					ATTACHING PARTS		
	213-0925-00	B010100	B017999	1	.SCREW,TPG,TR:4-40 X 0.25,TYPE TT,PNH,STL	80009	213-0925-00
	211-0304-00	B018000		1	.SCR,ASSEM WSHR:4-40 X 0.312,PNH,STL,T9	01536	ORDER BY DESCR
					END ATTACHING PARTS		
-22	124-0321-00			1	.STRIP,GROUND:CIRCUIT BOARD,6 TAB	80009	124-0321-00
	131-2732-00			2	.JACK,TIP:BANANA PLUG	80009	131-2732-00
	196-1123-00			2	.LEAD,ELECTRICAL:24 AWG,1.5 L,9-N	80009	196-1123-00
	210-0458-00			2	.NUT,PL,ASSEM WA:8-32 X 0.344,STL CD PL	78189	511-081800-00
-23	346-0169-00	B010100	B014069	1	.STRAP,RETAINING:RIBBON CABLE,POLYCARBONATE	80009	346-0169-00
-24	131-0993-00	B010100	B018231	5	.BUS,CONDUCTOR:SHUNT ASSEMBLY,BLACK	22526	65474-005
	131-0993-00	B018232		3	.BUS,CONDUCTOR:SHUNT ASSEMBLY,BLACK	22526	65474-005
-25	136-0757-00	B010100	B018231	1	.SKT,PL-IN ELEK:MICROCIRCUIT,40 DIP	09922	DILB40P-108
-26	136-0755-00	B010100	B018231	2	.SKT,PL-IN ELEK:MICROCIRCUIT,28 DIP	09922	DILB28P-108
	136-0755-00	B018232		1	.SKT,PL-IN ELEK:MICROCIRCUIT,28 DIP	09922	DILB28P-108
-27	136-0752-00	B010100	B014069	1	.SKT,PL-IN ELEK:MICROCIRCUIT,20 DIP	09922	DILB20P-108
-28	352-0096-00			1	.HLDR,XTAL UNIT:CIRCUIT BOARD	80009	352-0096-00
-29	131-0608-00			21	.TERMINAL,PIN:0.365 L X 0.025 BRZ GLD PL	22526	48283-036
-30	136-0263-06	B010100	B014069	16	.SOCKET,PIN TERM:U/M 0.025 SQ PIN	22526	75302-001
	136-0263-07	B014070		16	.SOCKET,PIN TERM:U/M 0.025 SQ PIN	22526	ORDER BY DESCR
-31	343-0154-00			1	.CLAMP,RIM CLENC:1.125 X 0.66 X 0.178,CU BE	80009	343-0154-00
					. ALBALOY PL		
-32	386-4855-00			3	.SUPPORT,CKT BD:CHASSIS MT,ACETAL	80009	386-4855-00
	386-4855-01			6	.SUPPORT,CKT BD:CHASSIS MT,POLYCARBONATE	80009	386-4855-01
	343-0088-00			2	.CLAMP,CABLE:0.062 DIA,PLASTIC	80009	343-0088-00
	343-0549-00			3	.STRAP,TIEDOWN,E:0.091 W X 4.0 L,ZYTEL	06383	PLT1M
-33	214-3327-00	B010100	B017668	6	.HINGE,CKT BOARD:11.6 L,PLASTIC	80009	214-3327-00
	214-3327-01	B017669		6	.HINGE,CKT BOARD:11.6 L,PLASTIC	80009	214-3327-01
					ATTACHING PARTS		
-34	213-0925-00	B010100	B017668	3	.SCREW,TPG,TR:4-40 X 0.25,TYPE TT,PNH,STL	80009	213-0925-00

Fig. & Index No.	Tektronix Part No.	Serial/Assembly No. Effective	Dscont	Qty	12345 Name & Description	Mfr. Code	Mfr. Part No.
3-	211-0325-00	B017669	B019965	3	.SCR,ASSEM WSHR:4-40 X 0.25,PNH,STL,TORX T9	01536	ORDER BY DESCR
	211-0304-00	B019966		3	.SCR,ASSEM WSHR:4-40 X 0.312,PNH,STL,T9	01536	ORDER BY DESCR
	213-0924-00	B010100	B017668	3	.SCREW,TPG,TR:4-40 X 0.25,TYPE TT,FLH	80009	213-0924-00
	211-0303-00	B017669		3	.SCREW,MACHINE:4-40 X 0.25,FLH 100 DEG,STL	93907	ORDER BY DESCR
					.(MOUNTED THRU REAR CHASSIS; 441-1536-00)		
					END ATTACHING PARTS		

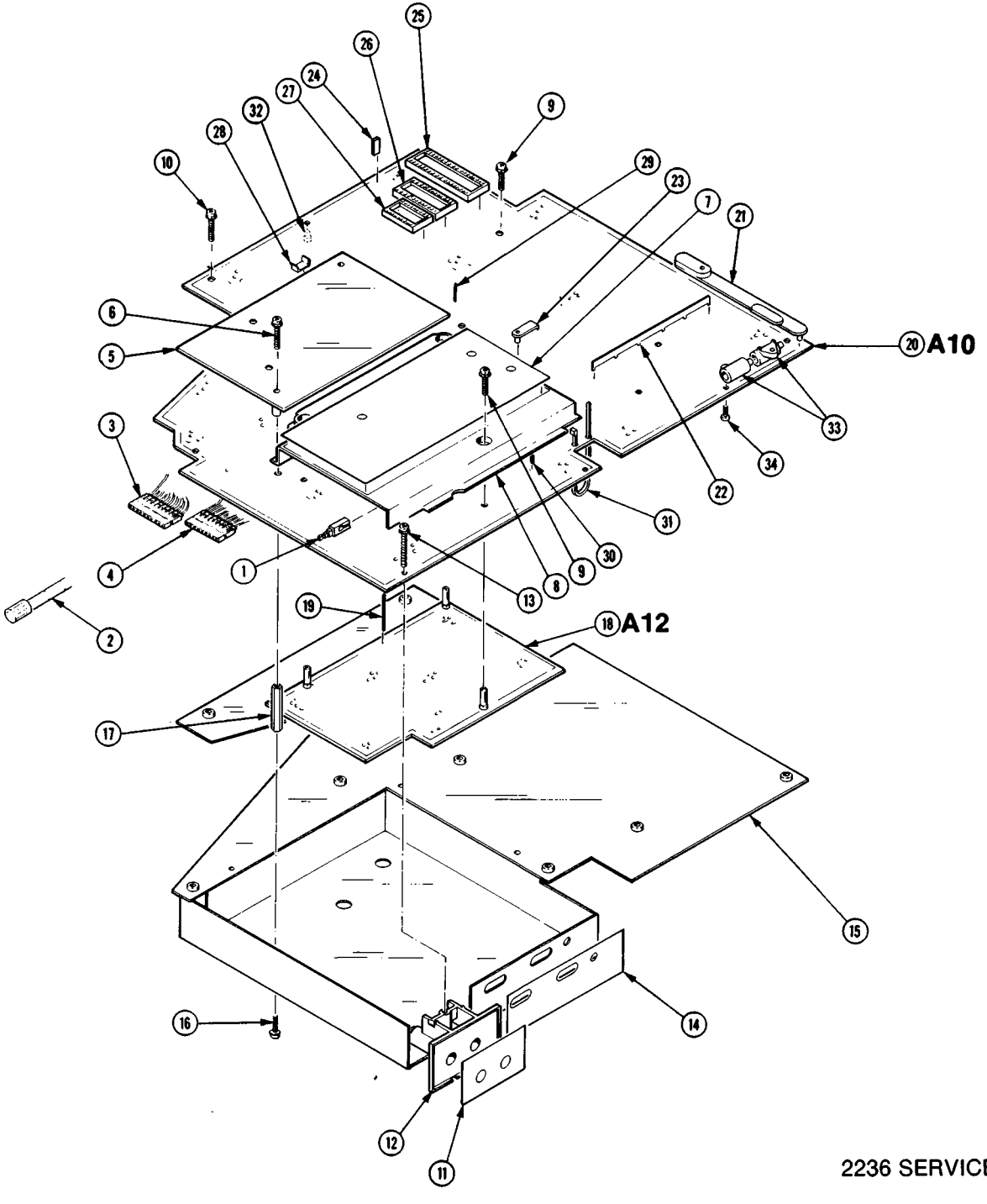
25
26
24
27
32
28
10
9
29
23
7
21
6
5
20 A10
33
3
34
22
31
30
9
8
13
1
4
2
19
18 A12
17
15
16
14
12
11

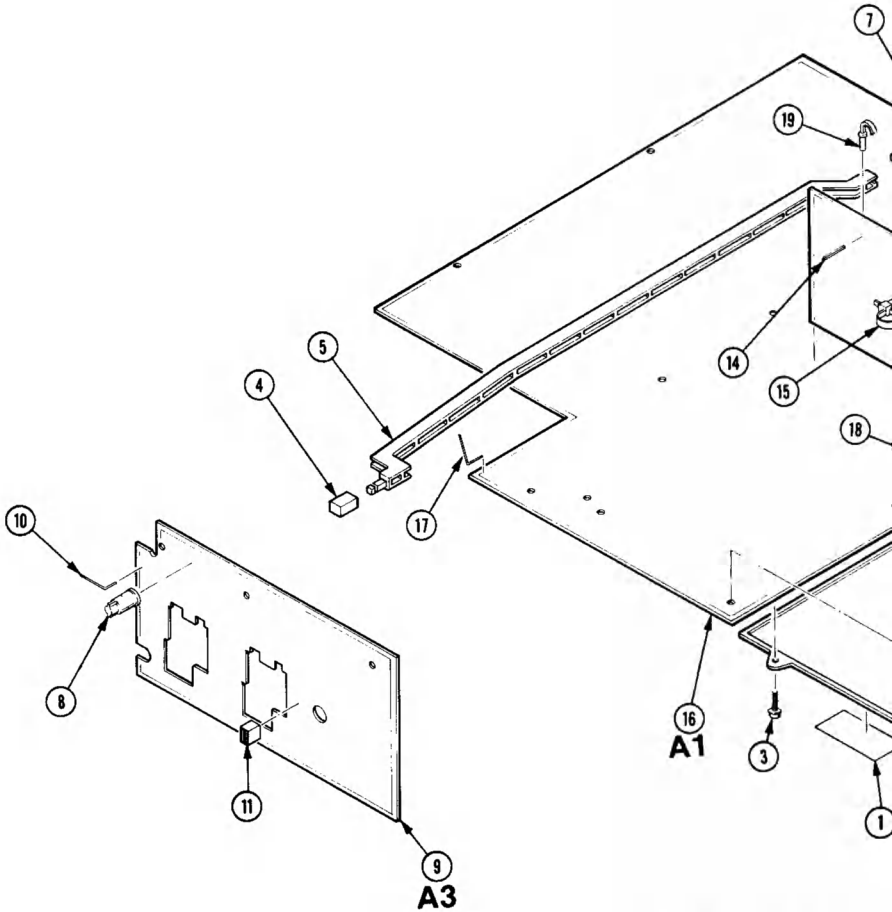
7
19
5
4
14
15
18
17
10
8
16
A1
3
1
11
9
A3

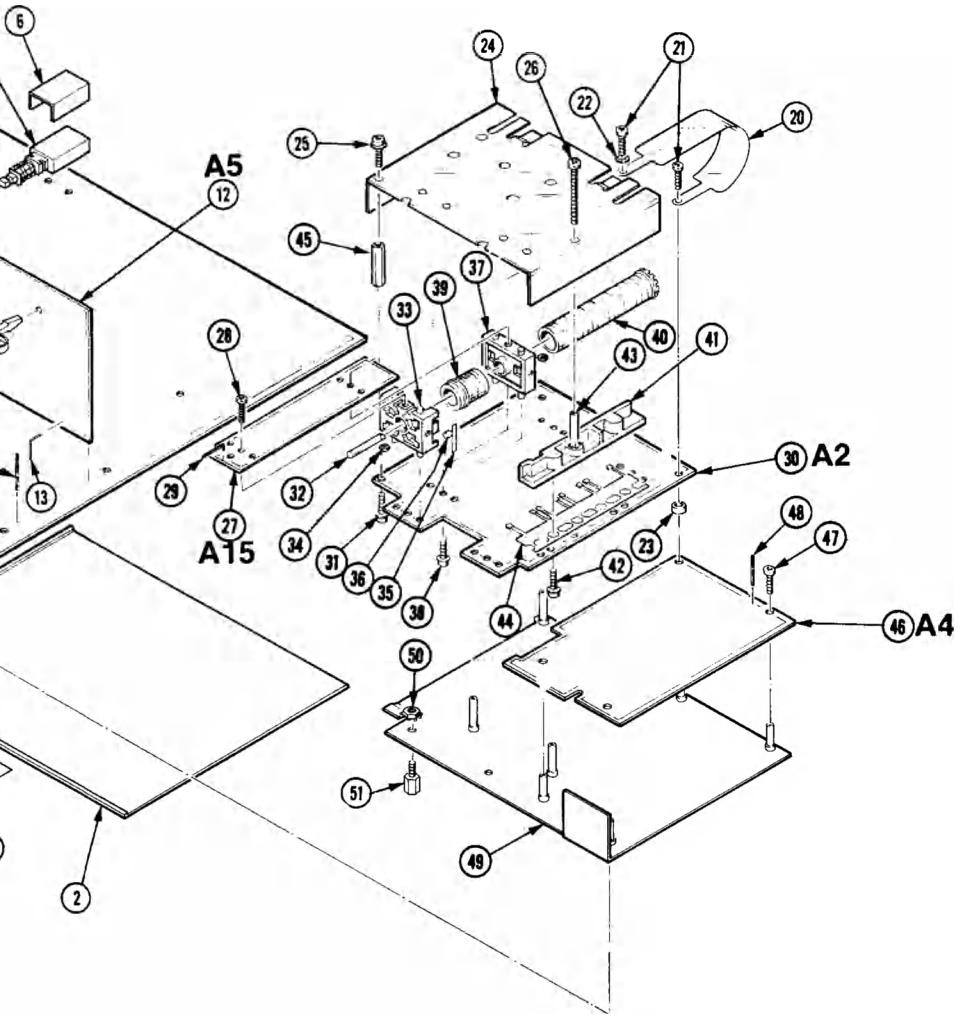
6
24
26
21
22
20
25
A5
12
45
37
39
33
40
41
43
28
30 A2
13
29
32
27
A15
34
31
36
35
38
23
48
47
42
44
46 A4
50
51
49
2

Fig. & Index No.	Tektronix Part No.	Serial/Assembly No. Effective	Dscont	Qty	12345 Name & Description	Mfr. Code	Mfr. Part No.
4-1	334-4251-00			1	MARKER,IDENT:MKD CAUTION	80009	334-4251-00
-2	337-2773-00	B010100	B014999	1	SHIELD,ELEC:POWER SUPPLY,LOWER,PLSTC	80009	337-2773-00
	337-2773-02	B015000		1	SHIELD,ELEC:POWER SUPPLY,LOWER PLASTIC	80009	337-2773-02
					ATTACHING PARTS		
-3	211-0304-00			1	SCR,ASSEM WSHR:4-40 X 0.312,PNH,STL,T9	01536	ORDER BY DESCR
					END ATTACHING PARTS		
-4	366-1480-02			1	PUSH BUTTON:BLACK,PWR OFF	80009	366-1480-02
-5	384-1576-01			1	EXTENSION SHAFT:12.544 L,PLASTIC	80009	384-1576-01
-6	200-2735-00			1	COVER,POWER SW:BLACK,POLYCARBONATE	80009	200-2735-00
-7	----- -----			1	SWITCH,PUSH:(SEE A1S901 REPL)		
-8	377-0512-00			6	INSERT,KNOB:0.125 ID X 0.247 OD X 0.663,AL	80009	377-0512-00
-9	----- -----			1	CKT BOARD ASSY:FRONT PANEL(SEE A3 REPL)		
-10	131-0608-00			2	.TERMINAL,PIN:0.365 L X 0.025 BRZ GLD PL	22526	48283-036
-11	136-0499-02			3	.CONN,RCPT,ELEC:CIRCUIT BD,2 CONTACTS	00779	3-380949-2
	175-3615-00			1	CA ASSY,SP,ELEC:3,26 AWG,9.0 L,RIBBON	80009	175-3615-00
-12	----- -----			1	CKT BOARD ASSY:ALTERNATE SWEEP(SEE A5 REPL)		
-13	131-0589-00			27	.TERMINAL,PIN:0.46 L X 0.025 SQ PH BRZ	22526	48283-029
-14	----- -----			10	.TERMINAL PIN:(SEE A5P2100,P2200 REPL)		
-15	346-0154-00			1	STRAP,TIEDOWN,E:6.125 L,PLASTIC,LATCH	06383	PLP1.5I INTERMED
-16	----- -----			1	CKT BOARD ASSY:MAIN(SEE A1 REPL)		
	129-0999-00			1	.SPACER,POST:0.485 L,4-40 INT/EXT,STL	80009	129-0999-00
-17	----- -----			13	.TERMINAL PIN:(SEE A1P2300,P2500,P2850,		
					.P9644,P9965 REPL)		
-18	131-0589-00			17	.TERMINAL,PIN:0.46 L X 0.025 SQ PH BRZ	22526	48283-029
					.(ALSO SEE A1P2400,P9802,TP940,TP950 REPL)		
-19	343-0088-00			1	.CLAMP,CABLE:0.062 DIA,PLASTIC	80009	343-0088-00
	175-8548-00			1	.CA ASSY,SP,ELEC:2,26 AWG,4.0 L,RIBBON	80009	175-8548-00
	195-7064-00			1	.LEAD,ELECTRICAL:	80009	195-7064-00
	195-7065-00			1	.LEAD,ELECTRICAL:22 AWG,1.5 L,9-2	80009	195-7065-00
	198-4819-00			1	.WIRE SET,ELEC:POWER FET	80009	198-4819-00
	343-0007-00			1	.CLAMP,LOOP:0.625 ID,PLASTIC	06915	E10 CLEAR ROUND
	195-0970-00			1	.LEAD,ELECTRICAL:26 AWG,3.0 L,0-N	80009	195-0970-00
	211-0304-00	B010100	B014885	1	.SCR,ASSEM WSHR:4-40 X 0.312,PNH,STL,T9	01536	ORDER BY DESCR
	211-0305-00	B014886		1	.SCR,ASSEM WSHR:4-40 X 0.437,PNH,STL,CD PL	01536	ORDER BY DESCR
-20	346-0196-00			2	STRAP,GROUND:ATTEN,3.0 X 0.75,BRONZE	80009	346-0196-00
					ATTACHING PARTS		
-21	211-0325-00			4	SCR,ASSEM WSHR:4-40 X 0.25,PNH,STL,TORX T9	01536	ORDER BY DESCR
-22	210-0801-00			2	WASHER,FLAT:0.14 ID X 0.281 OD X 0.25,BRS	12327	31724-000
					END ATTACHING PARTS		
-23	361-1191-00			1	SPACER,CKT BD:0.222 X 0.125 X 0.25,	80009	361-1191-00
-24	337-3014-01			1	SHIELD,ELEC:ATTENUATOR TOP	80009	337-3014-01
					ATTACHING PARTS		
-25	211-0325-00			1	SCR,ASSEM WSHR:4-40 X 0.25,PNH,STL,TORX T9	01536	ORDER BY DESCR
-26	211-0326-00			2	SCREW,MACHINE:4-40 X 1.25,PNH,STL	93907	ORDER BY DESCR
					END ATTACHING PARTS		
-27	----- -----			1	CKT BOARD ASSY:CHAN 1 LOGIC(SEE A15 REPL)		
					ATTACHING PARTS		
-28	211-0325-00			2	SCR,ASSEM WSHR:4-40 X 0.25,PNH,STL,TORX T9	01536	ORDER BY DESCR
					END ATTACHING PARTS		
					CKT BOARD ASSY INCLUDES:		
-29	131-0589-00			3	.TERMINAL,PIN:0.46 L X 0.025 SQ PH BRZ	22526	48283-029
					.(ALSO SE A15P2800,P2950 REPL)		
-30	----- -----			1	CKT BOARD ASSY:ATTENUATOR(SEE A2 REPL)		
					ATTACHING PARTS		
-31	211-0325-00			1	SCR,ASSEM WSHR:4-40 X 0.25,PNH,STL,TORX T9	01536	ORDER BY DESCR
					END ATTACHING PARTS		
					CKT BOARD ASSY INCLUDES:		
	136-0727-00	B016250		2	.SKT,PL-IN ELEK:MICROCKT,8 CONTACT	09922	DILB8P-108
-32	384-1056-00			2	.EXTENSION SHAFT:6.58 L X 0.123 OD,EPOX GL	80009	384-1056-00
	376-0209-00			2	.CPLG,SHAFT,RGD:0.127 ID,PLASTIC	80009	376-0209-00
-33	401-0370-00	B010100	B014999	4	.BEARING,CAM SW:END,0.6 DIA	80009	401-0370-00
	401-0370-01	B015000		4	.BEARING,CAM SW:END,0.6 DIA	80009	401-0370-01
-34	210-0406-00			4	.NUT,PLAIN,HEX:4-40 X 0.188,BRS CD PL	73743	12161-50
	361-1300-00	B015000		2	.SPACER,BEARING:0.115 ID X 0.2 OD,BRASS	80009	361-1300-00
-35	214-1126-01			6	.SPRING,FLAT:0.7 X 0.125,CU BE GRN CLR	80009	214-1126-01
	214-1126-02			2	.SPRING,FLAT:0.7 X 0.125,CU BE RED CLR	80009	214-1126-02
-36	214-1752-00			8	.ROLLER,DETENT:0.125 OD X 0.16,SST	80009	214-1752-00

Fig. & Index No.	Tektronix Part No.	Serial/Assembly No. Effective	Dscont	Qty	12345 Name & Description	Mfr. Code	Mfr. Part No.
4-37	401-0369-00			2	.BEARING,CAM SW:CENTER,0.6 DIA	80009	401-0369-00
					ATTACHING PARTS		
-38	211-0325-00			2	.SCR,ASSEM WSHR:4-40 X 0.25,PNH,STL,TORX T9	01536	ORDER BY DESCR
					END ATTACHING PARTS		
-39	105-0934-00	B010100	B016156	2	.ACTUATOR,CAM SW:AC-GND-DC	80009	105-0934-00
	105-0934-01	B016157		2	.ACTUATOR,CAM SW:AC-GND-DC	80009	105-0934-01
-40	105-0935-00	B010100	B016156	2	.ACTUATOR,CAM SW:ATTENUATOR	80009	105-0935-00
	105-0935-01	B016157		2	.ACTUATOR,CAM SW:ATTENUATOR	80009	105-0935-01
-41	343-1020-00			2	.RETAINER,CONT:ABS GRAY	80009	343-1020-00
					ATTACHING PARTS		
-42	211-0325-00			4	.SCR,ASSEM WSHR:4-40 X 0.25,PNH,STL,TORX T9	01536	ORDER BY DESCR
					END ATTACHING PARTS		
-43	361-1193-00			2	.SPACER,SLEEVE:0.555 L X 0.13 ID,BRS	80009	361-1193-00
-44	131-1758-11			2	.CONT ASSY,ELEC:8 CONTACTS	80009	131-1758-11
	131-1758-12			2	.CONT ASSY,ELEC:8 CONTACTS	80009	131-1758-12
-45	129-0986-00			1	.SPACER,POST:0.966 L,4-40 BOTH ENDS,AL	80009	129-0986-00
-46	----- -----			1	CKT BOARD ASSY:TIMING(SEE A4 REPL)		
					ATTACHING PARTS		
-47	211-0325-00			3	SCR,ASSEM WSHR:4-40 X 0.25,PNH,STL,TORX T9	01536	ORDER BY DESCR
					END ATTACHING PARTS		
					CKT BOARD ASSY INCLUDES:		
-48	131-0608-00			18	.TERMINAL,PIN:0.365 L X 0.025 BRZ GLD PL	22526	48283-036
					.(ALSO SEE A4P9700,P9705 REPL)		
-49	337-2944-00			1	SHIELD,ELEC:SW BOARDS,BOTTOM	80009	337-2944-00
					ATTACHING PARTS		
-50	210-0406-00			2	NUT,PLAIN,HEX:4-40 X 0.188,BRS CD PL	73743	12161-50
					END ATTACHING PARTS		
-51	129-0906-00			2	SPACER,POST:0.685 L,4-40 INT/EXT,AL	80009	129-0906-00

Fig. & Index No.	Tektronix Part No.	Serial/Assembly No. Effective	Dscont	Qty	12345 Name & Description	Mfr. Code	Mfr. Part No.
5-							
					STANDARD ACCESSORIES		
	010-6121-01			2	PROBE,VOLTAGE:P6121,1.5 METER,10X,W/ACCESS	80009	010-6121-01
-1	012-0941-01			1	LEAD SET,METER:(2)LEAD,ELEC	80009	012-0941-01
	020-0086-00			2	ACCESSORY PKG:	80009	020-0086-00
	159-0019-00			1	FUSE,CARTRIDGE:3AG,1A,250V,SLOW BLOW	71400	MDL 1
-2	161-0104-00			1	CABLE ASSY,PWR,:3 WIRE,98.0 L,W/RTANG CONN SAFETY CONTROLLED	16428	CH8352, FH-8352
-3	343-0003-00			1	CLAMP,LOOP:0.25 ID,PLASTIC	06915	E4 CLEAR ROUND
-4	213-0882-00			1	SCREW,TPG,TR:6-32 X 0.437 TAPTITE,PNH,STL	83385	ORDER BY DESCR
-5	210-0803-00			1	WASHER,FLAT:0.15 ID X 0.375 OD X 0.032	12327	ORDER BY DESCR
	070-4205-00			1	MANUAL,TECH:OPERATOR,2236	80009	070-4205-00
	070-5371-00			1	MANUAL,TECH:USERS GUIDE,2236	80009	070-5371-00
	016-0677-03			1	POUCH,ACCESSORY: (STANDARD FOR OPTION 33 ONLY)	80009	016-0677-03
	200-2520-00			1	COVER,SCOPE:FRONT,ABS (STANDARD FOR OPTION 33 ONLY)	80009	200-2520-00
	346-0199-00			1	STRAP,CARRYING:WKD TEKTRONIX (STANDARD FOR OPTION 33 ONLY)	80009	346-0199-00
					OPTIONAL ACCESSORIES		
	070-4204-00			1	MANUAL,TECH:SERVICE,2236	80009	070-4204-00
	020-0672-02			1	ACCESSORY KIT:	80009	020-0672-02
-6	200-2520-00			1	.COVER,SCOPE:FRONT,ABS	80009	200-2520-00
	016-0677-02			1	.POUCH,ACCESSORY:	80009	016-0677-02
-7	016-0535-01			1	..POUCH,ACCESSORY:EXPANDED POLYESTER	80009	016-0535-01
-8	386-4674-00			1	..PLATE,MOUNTING:ACCESSORY POUCH,ALUMINUM	80009	386-4674-00
-9	159-0041-00			1	..FUSE,CARTRIDGE:3AG,1.25A,250V,20SEC ..(STANDARD ACCESSORY)	71400	MSL 1 1/4
-10	013-0191-00			1	TIP,PROBE:W/ACTUATOR	80009	013-0191-00
	016-0015-00			1	RACK ADPTR KIT:	80009	016-0015-00
	010-6602-00			1	PROBE,TEMP:P6602,64.0 L,230 DEG C	80009	010-6602-00
	016-0792-01			1	CASE,CARRYING:24.5 X 16.5 X 11.5	TK1336	ORDER BY DESCR
	346-0199-00			1	STRAP,CARRYING:WKD TEKTRONIX	80009	346-0199-00
	020-0859-00			1	COMPONENT KIT:EUROPEAN	80009	020-0859-00
	200-2265-00			1	.CAP,FUSEHOLDER:5 X 20MM FUSES	TK0861	FEK 031.1663
-11	161-0104-06			1	.CABLE ASSY,PWR,:3 X 0.75MM SQ,220V,98.0 L	S3109	ORDER BY DESCR
	020-0860-00			1	COMPONENT KIT:UNITED KINGDOM	80009	020-0860-00
	200-2265-00			1	.CAP,FUSEHOLDER:5 X 20MM FUSES	TK0861	FEK 031.1663
-12	161-0104-07			1	.CABLE ASSY,PWR,:3 X 0.75MM SQ,240V,98.0 L	TK1373	A25UK-RA
	020-0861-00			1	COMPONENT KIT:AUSTRALIAN	80009	020-0861-00
	200-2265-00			1	.CAP,FUSEHOLDER:5 X 20MM FUSES	TK0861	FEK 031.1663
-13	161-0104-05			1	.CABLE ASSY,PWR,:3,18 AWG,240V,98.0 L	S3109	ORDER BY DESCR
	020-0862-00			1	COMPONENT KIT:NORTH AMERICAN	80009	020-0862-00
	200-2265-00			1	.CAP,FUSEHOLDER:5 X 20MM FUSES	TK0861	FEK 031.1663
-14	161-0104-08			1	.CABLE ASSY,PWR,:3,18 AWG,240V,98.0 L	70903	ORDER BY DESCR
	020-0863-00			1	COMPONENT KIT:SWISS	80009	020-0863-00
	200-2265-00			1	.CAP,FUSEHOLDER:5 X 20MM FUSES	TK0861	FEK 031.1663
-15	161-0167-00			1	.CABLE ASSY,PWR,:3.0 X 0.75,6A,240V,2.5M L	S3109	ORDER BY DESCR
	016-0848-00			1	COVER,PROT:WATERPROOF VINYL	80009	016-0848-00

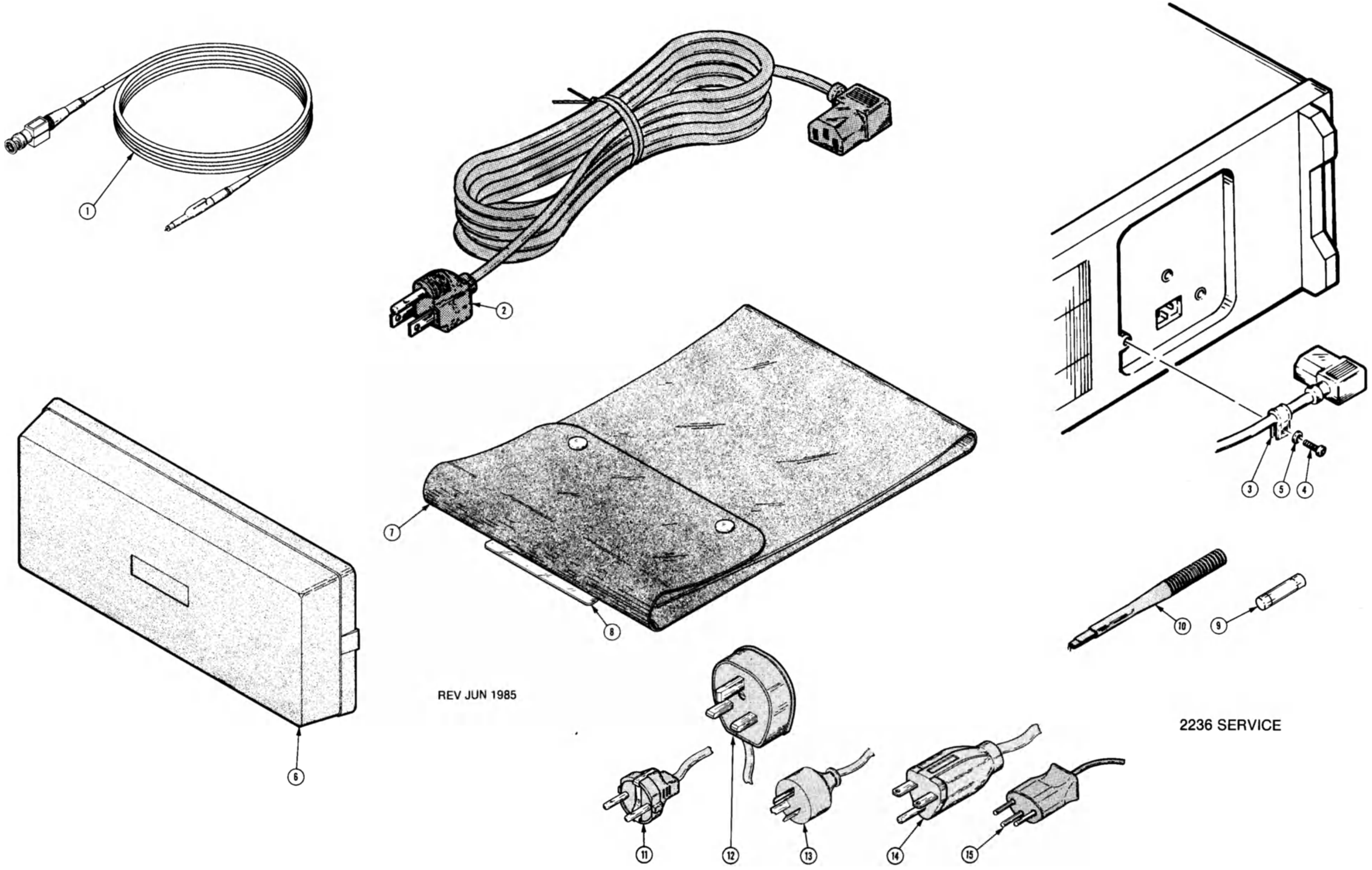

REV JUN 1985

2236 SERVICE

MANUAL CHANGE INFORMATION

At Tektronix, we continually strive to keep up with latest electronic developments by adding circuit and component improvements to our instruments as soon as they are developed and tested.

Sometimes, due to printing and shipping requirements, we can't get these changes immediately into printed manuals. Hence, your manual may contain new change information on following pages.

A single change may affect several sections. Since the change information sheets are carried in the manual until all changes are permanently entered, some duplication may occur. If no such change pages appear following this page, your manual is correct as printed.

Tektronix®
COMMITTED TO EXCELLENCE

MANUAL CHANGE INFORMATION

Date: 11-10-86 Change Reference: M61199

Product: 2236 SERVICE Manual Part No.: 070-4204-00

DESCRIPTION Product Group 46

EFFECTIVE SERIAL NUMBER: B022920

REPLACEABLE ELECTRICAL PARTS LIST CHANGES

Add the following parts noting the appropriate serial numbers.

A1W9778	195-7065-00	B010100	B022919	LEAD,ELECTRICAL: 22 AWG,1.5 L,9-2
A1W9778	195-7064-00	B022920		LEAD,ELECTRICAL: 22 AWG,2.25 L,9
A1W9788	195-7064-00			LEAD,ELECTRICAL: 22 AWG,2.25 L,9

Tektronix
COMMITTED TO EXCELLENCE

MANUAL CHANGE INFORMATION

Date: 2-3-87 Change Reference: M61818

Product: 2236 SERVICE Manual Part No.: 070-4204-00

DESCRIPTION Product Group 46

EFFECTIVE SERIAL NUMBER: B023785

REPLACEABLE ELECTRICAL PARTS LIST CHANGES

CHANGE TO:

A1C799	285-1341-01	CAP,FXD,MTLZD: 0.1UF,20%,100VDC
A1C847	285-1341-01	CAP,FXD,MTLZD: 0.1UF,20%,100VDC
A1C849	285-1341-01	CAP,FXD,MTLZD: 0.1UF,20%,100VDC
A1C851	285-1341-01	CAP,FXD,MTLZD: 0.1UF,20%,100VDC
A1C871	285-1341-01	CAP,FXD,MTLZD: 0.1UF,20%,100VDC
A1C941	285-1341-01	CAP,FXD,MTLZD: 0.1UF,20%,100VDC

Tektronix®
COMMITTED TO EXCELLENCE

MANUAL CHANGE INFORMATION

Date: 1-26-87 Change Reference: M61549

Product: 2236 SERVICE Manual Part No.: 070-4204-00

DESCRIPTION Product Group 46

EFFECTIVE SERIAL NUMBER: B023850

REPLACEABLE ELECTRICAL PARTS LIST CHANGES

CHANGE TO:

A1C210	283-0853-00	CAP,FXD,CER DI: 2.2PF,200V

Tektronix®
COMMITTED TO EXCELLENCE

MANUAL CHANGE INFORMATION

Date: 2-23-87 Change Reference: M61300

Product: 2236 SERVICE Manual Part No.: 070-4204-00

DESCRIPTION Product Group 46

SEE BELOW FOR EFFECTIVE SERIAL NUMBERS

REPLACEABLE ELECTRICAL PARTS LIST CHANGES

CHANGE TO:

A1	670-7571-12	B024000	CKT BOARD ASSY: MAIN
A10	670-7421-04	B024000	CKT BOARD ASSY: COUNTER,PARTIAL
A11	672-1139-04	B024000	CKT BOARD ASSY: COUNTER (OPTION 14 ONLY)
A1W9440	175-6141-01	B024000	CA ASSY,SP,ELEC: 4,7.5 L,FLEX STRIP
A1W9705	175-6137-01	B024000	CA ASSY,SP,ELEC: 8,6.25 L,FLEX STRIP
A1W9991	175-6139-01	B024000	CA ASSY,SP,ELEC: 3,4.25 L,FLEX STRIP
A10W2000	175-6644-01	B023850	CA ASSY,SP,ELEC: 10,3.25 L,FLEX STRIP
A10W2050	175-6643-01	B023850	CA ASSY,SP,ELEC: 9,3.25 L,FLEX STRIP

CHASSIS PARTS

R9802	311-2177-03	B023880	RES,VAR,NONWW: PNL,10K OHM,20%,0.5W W/MOUNTING PLATE & CABLE

REPLACEABLE MECHANICAL PARTS LIST CHANGES

REMOVE:

361-1192-00	B023880	1	SPACER,SLEEVE: 0.45 L X 0.25 ID,AL

NOTE:

This sleeve is not illustrated in the exploded view. It is only used with R9802 PN: 311-2177-02 serial numbers B023879 and below.

Q935, Q946, Q947, OR Q9070 REPLACEMENT

(Q933, Q935, Q940 OR Q942 in 2213 and 2215 instruments)

For the following TEKTRONIX® instruments:

2213*	Serial Numbers	B020100 - Up
2213 Opt. 48	Serial Numbers	B010100 - Up
2213A	Serial Numbers	B010100 - B029677
2215*	Serial Numbers	B022000 - Up
2215 Opt. 48	Serial Numbers	B010100 - Up
2215A	Serial Numbers	B010100 - Up
2235	Serial Numbers	B010100 - B041675
2236	Serial Numbers	B019720 - B028884

This kit provides parts and instructions to replace the SCR, FET, and inverter transistors. Because failure of any one of these components may cause excess stress to the others, replacement of all components is recommended.

The new silicon control rectifier has improved current characteristics and the new inverter transistors, have improved saturation characteristics. Use of the new field effect transistor, which has a higher voltage rating, requires changing the value of R908.

This replacement kit also incorporates the following reliability improvements.

1. The circuit location for VR901 and R900 are switched to prevent excess stress to VR901.
2. The values of R945 and R949 are changed to ensure the power supply shuts down if Q939, the inverter transistors, or the +8.6V, -8.6V or +5V supplies are shorted.
3. A diode-resistor network is added between the emitters of Q946/Q947 and the gate of Q935 to ensure power supply shutdown if an overvoltage occurs.

NOTE

If the instrument serial number is greater than those listed above or if this kit has been previously installed, disregard the instructions and use the new SCR, FET, and inverter transistors as direct replacements. Parts Replacement Kit, pn 050-2240-XX, is available to replace Q935, Q946, Q947, or Q9070 in 2236 instruments with serial numbers below B019720.

* This kit may be used on 2213 instruments below serial number B020100 and 2215 instruments below serial number B022000 if Option 48 has been installed. Option 48 instruments have a new Power Supply (with the Preregulator board mounted above the Main board) which was installed via a modification kit (040-1119-XX or 040-1120-XX).

Copyright © 1989
Tektronix, Inc.
All Rights Reserved

TEKTRONIX, SCOPE-MOBILE and are registered trademarks of trademark of Sony / Tektronix, Inc.

CAUTION

STATIC SENSITIVE DEVICES

Static discharge can damage any semiconductor component in this instrument. Static voltages of 1kV to 30kV are common in unprotected environments.

TO AVOID DAMAGE, OBSERVE THE FOLLOWING:

1. Minimize handling of static-sensitive components.

2. Transport and store static-sensitive components or assemblies in their original containers, on a metal rail, or on conductive foam. Label any package that contains static-sensitive assemblies or components.

3. Discharge the static voltage from your body by wearing a wrist-strap while handling these components. Servicing static-sensitive assemblies or components should be performed only at a static-free work station by qualified service personnel.

4. Nothing capable of generating or holding a static charge should be allowed on the work station surface.

5. Keep the component leads shorted together whenever possible.

6. Pick up components by the body, never by the leads.

7. Do not slide the components over any surface.

8. Avoid handling components in areas that have a floor or work-surface covering capable of retaining a static-charge.

9. Use a soldering iron that is connected to earth ground.

10. Use only approved, anti-static type, desoldering tools.

KIT PARTS LIST:

Ckt. Number	Quantity	Part Number	Description
A1CR948/R948	1 ea	119-3511-00	Diode-resistor network
A1W934	1 ea	131-0566-00	Bus, conductor: Dummy resistor
A1Q935*	1 ea	151-0565-00	Thyristor, SCR: 8A, 200V, sens gate, TO-220
A1Q946* A1Q947*	2 ea	151-0852-00	Transistor: NPN, 50V, 150mA, 200mW, Inverter
A1Q9070*	1 ea	151-1245-00	Transistor: MOSEFET, N-Channel, TO-220
A1R945	1 ea	301-0202-00	Resistor, fxd, film: 2kΩ, 5%, 0.5W
A6R900	1 ea	301-0474-00	Resistor, fxd, film: 470kΩ, 5%, 0.5W
A6VR901	1 ea	307-0456-00	Resistor, volt sens: 250vac, 20W
A1R949	1 ea	308-0755-00	Resistor, fxd, ww: 0.75Ω, 5%, 2W
A1R908	1 ea	315-0222-00	Resistor, fxd, film: 2.2kΩ, 5%, 0.25W
	1 ea	----- -----	Label: 050-kit

* A1Q935, A1Q946, A1Q947 and A1Q9070 are designated A18Q935, A10Q940, A10Q942 and A18Q933, respectively, in 2213 and 2215 instruments.

INSTALLATION INSTRUCTIONS:

THE FOLLOWING INSTRUCTIONS ARE DIVIDED INTO TWO SECTIONS.

SECTION A applies to 2213 and 2215 instruments.

SECTION B applies to 2213A, 2215A, 2235, and 2236 instruments.

SECTION A (2213 and 2215):

WARNING

Dangerous shock hazards may be exposed when the instrument covers are removed. Before proceeding, ensure the power switch is in the off position. Then, disconnect the instrument from the power source. Disassembly should only be attempted by qualified service personnel.

( ) 1. Remove the instrument wrap-around cabinet.

( ) 2. Remove the screw used to secure the plastic power supply shield to the solder side of the Main circuit board and set the shield aside.

( ) 3. Remove the metal power supply shield from the component side of the Main circuit board as follows:

( ) a. Remove the screw used to secure the lower right front corner of the power supply shield to the Main circuit board. The screw is accessible from the solder side of the Main circuit board.

( ) b. Remove the three screws used to secure the power supply shield to the rear chassis (two located along the left rear edge of the shield and one located in the upper right rear corner of the shield).

( ) c. Remove the screw used to secure the upper right front corner of the power supply shield.

( ) d. Remove the screw used to secure the support bracket to the top left front corner of the power supply shield and rotate the support bracket away from the shield.

( ) e. Remove the screw used to secure the Preregulator circuit board assembly to the upper left corner of the power supply shield.

( ) f. Carefully lift the power supply shield up and out of the chassis by removing the right rear corner first.

( ) 4. Remove the Preregulator circuit board assembly as follows:

( ) a. Remove the two screws used to secure the Preregulator circuit board mounting brackets (one near the top center of the rear chassis and one on the right side near the rear corner of the chassis).

( ) b. Remove the securing screw that is acccessible through the hole in the plastic shield located on top of the Preregulator circuit board.

( ) c. Disconnect the four wire connectors (P801, P802, P803, and P804) from the Preregulator circuit board noting their locations for reference during installation.

( ) 5. On the A10 Main circuit board, replace Q940 and Q942 with the new components included in this kit. Refer to the parts list on page 3 for circuit and part number information.

Make the following changes on the A18 Preregulator circuit board.

( ) 6. Replace Q933 and Q935 with the new components included in this kit. Refer to the parts list on page 3 for circuit and part number information.

( ) 7. Replace R934, a 3Ω 3W resistor located adjacent to Q933, with the dummy resistor (W934) included in this kit.

( ) 8. Install the Preregulator circuit board assembly and the two power supply shields, by performing the reverse of the procedure described in steps 2 through 4.

( ) 9. Refer to the Performance Check Procedure in the Instruction Manual and verify performance.

( ) 10. Remove the protective backing from the 050-kit label, included in this kit, and place the label on a clean, flat surface of the rear panel.

( ) 11. Correct the Replaceable Electrical Parts list in the Instruction Manual with the information provided in the parts list of this kit.

SECTION B (2213A, 2215A, 2235, and 2236):

WARNING

Dangerous shock hazards may be exposed when the instrument covers are removed. Before proceeding, ensure the power switch is in the off position. Then, disconnect the instrument from the power source. Disassembly should only be attempted by qualified service personnel.

( ) 1. Remove the instrument wrap-around cabinet.

( ) 2. Remove the screw used to secure the plastic power supply shield to the solder side of the Main circuit board and set the shield aside.

( ) 3. For 2236 instruments only, lift the CTM circuit board up to the service position and secure the board latch into the chassis side rail.

( ) 4. Remove the metal power supply shield from the component side of the Main circuit board as follows:

( ) a. Remove the screw used to secure the lower right front corner of the power supply shield to the Main circuit board. The screw is accessible from the solder side of the Main circuit board.

( ) b. Remove the three screws used to secure the power supply shield to the rear chassis (two located along the left rear edge of the shield and one located in the upper right rear corner of the shield).

( ) c. Remove the crt anode lead from the anode clip on the side of the power supply shield.

( ) d. Remove the screw used to secure the upper right front corner of the power supply shield.

( ) e. Carefully lift the power supply shield up and out of the chassis by removing the right rear corner first.

Make the following changes on the A1 Main circuit board.

( ) 5. Replace Q935, Q946, Q947, and Q9070 with the new components included in this kit. Q946, Q947 and Q9070 are located on the nearby metal shield. Refer to the parts list on page 3 for circuit and part number information.

( ) 6. Check the value of R934. If R934 is a 3Ω 3W resistor, replace it with the dummy resistor (W934) included in this kit.

( ) 7. Replace R908, a 3kΩ 0.25W resistor, with the 2.2kΩ resistor included in this kit.

Perform step 8 only on 2235 instruments below serial number B011700. The 2213A, 2215A and 2236 instruments already have the correct resistor.

( ) 8. Remove CR945 and replace R945, a 6.2kΩ 0.5W resistor, with the 2kΩ resistor included in this kit.

Perform step 9 only on 2236 instruments in the serial number range of B019720 to B028298 inclusive. The 2213A, 2215A and 2235 instruments already have the correct resistor.

( ) 9. Replace R949, a 0.51Ω 2W resistor, with the 0.75Ω resistor included in this kit.

Perform step 10 only if the diode-resistor network shown in Fig. 1 is not present.

( ) 10. Install the diode-resistor network, included in this kit, as shown in Fig. 1. Connect the cathode lead to the lead of R935 that is closest to the rear of the instrument. Connect the resistor lead of the new network to the lead of R949 that is nearest the front of the instrument. Ensure both leads of the new network make a solid mechanical connection by installing the leads into the circuit board holes with the resistor leads or by wrapping the network leads around the resistor leads before soldering.

( ) 11. If VR901, on the EMI Filter circuit board, is located adjacent to the 10Ω thermal resistor (RT901), the physical locations of VR901 and R900 will need to be swapped. A voltage sensitive resistor (VR901) and a 470kΩ resistor (R900) have been included in this kit to facilitate swapping their locations.

( ) 12. Install the two power supply shields by performing the reverse of the procedure described in steps 2 through 4.

( ) 13. Refer to the Performance Check Procedure in the Instruction Manual and verify performance.

( ) 14. Remove the protective backing from the 050-kit label, included in this kit, and place the label on a clean, flat surface of the rear panel.

( ) 15. Correct the Replaceable Electrical Parts list and the Power Supply, Z-Axis & CRT schematic in the Instruction Manual with the information provided in the parts list of this kit.

JLG

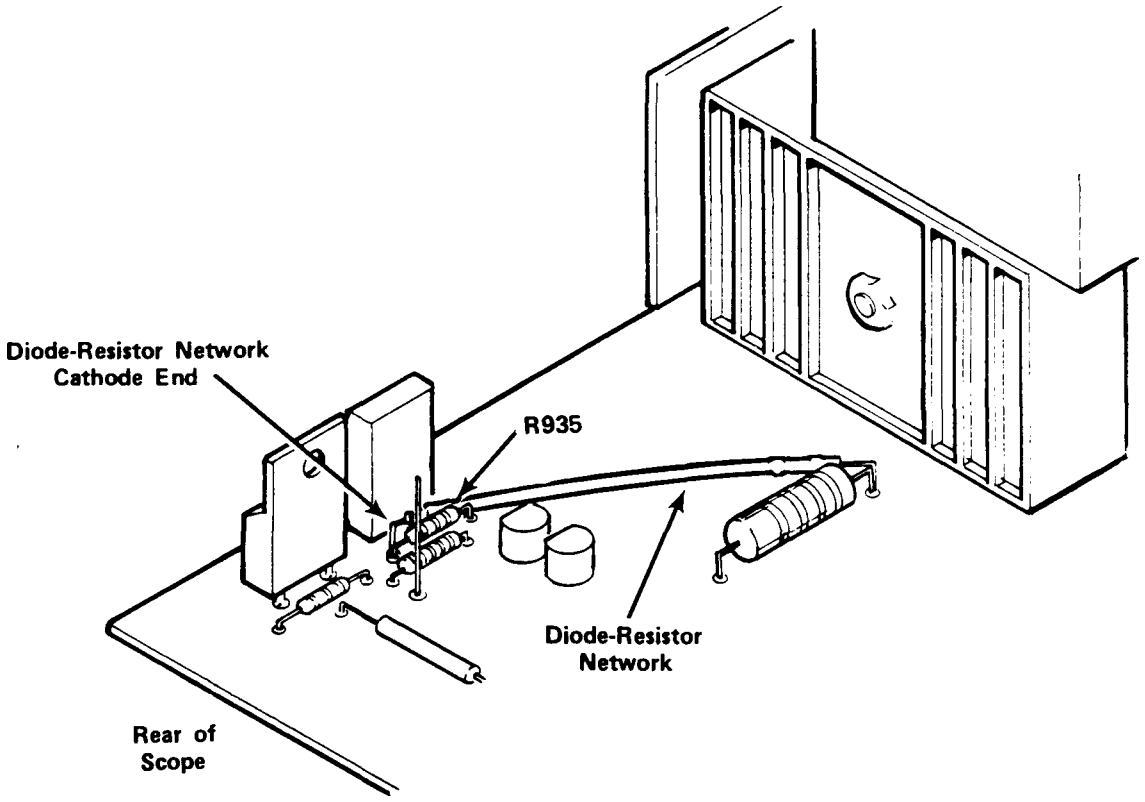

Fig. 1. Location of new diode-resistor network.