TEKTRONIX®

25ps PUSH PULL PULSE GENERATOR

INSTRUCTION MANUAL

Tektronix, Inc.
P.O. Box 500
Beaverton, Oregon 97005

Serial Number _____

1072


25ps PUSH-PULL PULSE GENERATOR
S-52
POSITIVE PULSE
GENERATOR HEAD
PULSE OUTPUT
+200 mV INTO 50Ω
REVERSE TERM
$t_r \leq 25ps$
DO NOT
APPLY
EXT SIGNAL
LOCK
TEKTRONIX®
S-52
NEGATIVE PULSE
GENERATOR HEAD
PULSE OUTPUT
−200 mV INTO 50Ω
REVERSE TERM
$t_r \leq 25ps$
DO NOT
APPLY
EXT SIGNAL
LOCK
TEKTRONIX®
PRE TRIG
85ns
10ns
POWER
ON

SECTION 1
CHARACTERISTICS

General Information

The 25 ps Push Pull Pulse Generator is an in-house source of fast-rise simultaneous pulses symmetrical about ground. Two pretrigger pulses are available which preceed the fast rise pulse by either 10 ns or 85 ns.

Both pretrigger outputs are isolated from ground and from each other. This allows two separate scopes to be triggered even though they are at different levels.

Automatic tunnel diode biasing assures reliable operation and relative immunity from changes in load.

Risetime:
25 ps or less

Aberrations (measured with S-6):
+5%, —10%, total of 10% P-P within 1.8 ns referred to 1.8 ns after step

±2%, 4% P-P after 2.5 ns referred to 1 μs after step

Time Coincidence:
Adjustable to zero time difference with DELAY control (rear panel)

DELAY Range:
±2 ns from coincidence

Time Coincidence Drift:
Approximately 100 ps during warmup

Pulse Duration:
≥350 ns

Period:
8.3 μs ±10%

Baseline Level:
55 mV to 120 mV terminated into 50 ohms

Source Impedance:
50 Ohms, ±2%

Pretrigger Time:
10 ns ±3 ns or 85 ns ±5 ns selectable from front panel

Pretrigger Pulse Amplitude
+1 V, ±20% into 50 Ω

Pretrigger Pulse Risetime
Approximately 2 ns

Pretrigger to Pulse Jitter:
15 ps or less

Line Voltage Range
105 - 125 VAC or
210 - 250 VAC
48 - 440 Hz

Temperature Range:
0°C to 30°C operating
—40°C to +65°C nonoperating

Weight:
4 lbs. 6 oz. (2 kg)

SECTION 2
OPERATION

PRECAUTIONS

There are a few precautions to be observed when using the instrument which will improve the lifetime of the tunnel diodes.

The 50 mA tunnel diodes used to produce the output pulses are just 0.1 mil in diameter. This is a current density of over 1,500,000 amps per square inch. Equally important is the fact that the junction material is germanium, not silicon. Thus high temperature can and will degrade the junction. Do not operate the instrument on top of other instruments or with ventilation holes obstructed. It is also preferable that the instrument be turned off when not in use. The tunnel diodes cost Tektronix $65 each.

Another precaution is to use an AC coupling capacitor (015-1013-00 OSM, or 017-0028-00, GR) in series with each pulse output when there is the possibility of accidentally running DC back into the output. Naturally if you have no power supplied to the circuit under test or if all chassis are at the same DC potential this precaution is less important. A 2X attenuator pad (015-1001-00 or 017-0080-00) provides good protection in the later case and improves the system reverse termination at the same time.

Do not operate the unit without both heads installed, as the power supplies do not regulate without a full load.

DELAY ADJUSTMENT

Since there is a DELAY or B DELAY control on several TEK samplers, and a DELAY control on the 25 ps Push Pull Pulse Generator (PPPG) there is considerable chance that the circuit under test will not be presented with simultaneous pulses. TDR of passive circuits can be quite inaccurate by complementary misadjustments of the two delay controls.

Correct adjustment is not complicated. First adjust the sampler (and the cables attached to it) by connecting each input to one of the ports of a power divider (015-1014-00 or 017-0082-00). Connect the remaining port of the power divider to one output of the PPPG. Now adjust the sampler for time coincidence. Connect the two cables from the sampler to each PPPG output and adjust the rear panel DELAY control of the PPPG for coincidence as viewed on the sampler. This assures that the two channels of the sampler and two PPPG outputs are all simultaneous.

Caution: The invert control on some samplers shifts the sampler delay slightly. It is preferable to adjust the scope in the mode in which it will be used. Some samplers have a similar shift in delay between DUAL TRACE and A + B modes. Thus extreme care must be used in operating the sampler. Sometimes it is best just to select a scope with a minimum of these problems.

Note that warmup drift on some of our samplers is substantial (2 ns for the 3S2). It is helpful to leave the sampler on continuously as it is quite stable after warmup. The PPPG drifts only about 1/20 as much as the sampler during warmup, but may show greater short-term drift.

Adjustment of delay with differential amplifiers is simpler. Usually sampler and PPPG controls may be set independently without disassembling the test set up. Such circuits almost always have minimum risetime when input pulses are coincident. Observe the outputs of the circuit under test in DUAL TRACE with the sampler and adjust sampler DELAY or B DELAY for coincidence on the screen. The cables need not be closely matched for this as the sampler can compensate for large cable length (time) differences. Adjust the PPPG DELAY control for a minimum of observed risetime (or if applicable, for maximum overshoot). Return to A + B mode. (Hopefully the difference in time delay caused by changing modes on the sampler will be negligible compared with the risetime of the circuit under test, but a small adjustment of the sampler DELAY for minimum risetime is the best test for this. Get another scope if sampler mode changes effect delay excessively.)

LOAD IMPEDANCE CHANGES

A slight change in time coincidence will occur upon changing the DC load impedance on one pulser. For example, changing from a shorted line to an open line can result in $\approx$80 ps delay in the pulse. Since both pulse outputs usually have identical loads or load changes, time coincidence variations due to this source are usually very small.

T. D. BIAS

There are two T. D. bias controls, one for each head, which may be reached from outside the instrument through ventilation holes in the top of the cabinet. Normally these do not need adjustment. They are properly adjusted if there are output pulses under all conditions of load, DELAY setting and PRETRIG switch selection. There is some range of the bias control over which the output pulse occurs, the control should be set at the center of this range.

SNAP-OFF DIODES

The Snap-Off Diodes (152-0252-00) used in the PPPG are matched to within 10% for stored charge at 10 mA. If they are not matched the DELAY control range will not allow the negative pulse to be advanced and retarded a full 2 ns relative to the positive pulse.

Failure of the negative pulse at either extreme of the delay range may be due to a faulty snap-off diode. Replace diodes in the positive and negative heads with a matched pair. The blue dot on the snap-off diode goes toward the front of the instrument in the positive head, toward the rear in the negative head.

INTERCHANGEABILITY OF HEADS

Heads for the PPPG come in matched pairs. However, only the snap-off diodes are matched as explained in the preceding paragraph. Thus, it is possible to replace one head with an other identical head if the snap-off diodes are matched. No damage will result if they are not matched, but the operation of the DELAY control may be affected.

It is not possible to exchange the positive head for a negative head or vice versa. Furthermore, only a positive head will work in the left hole and a negative head in the right hole.

Main frames are identical and interchangeable.

CIRCUIT DESCRIPTION

The basic operation of the positive head is the same as that in the TEKTRONIX S-52 Plug-In Head. Circuit description and maintenance sections of the S-52 manual (070-1101-00) should be consulted for detailed information.

The positive head contains the oscillator and timing circuits for both heads. The negative head contains only the snap-off diode (which is reversed from the positive head) and drive circuitry for the tunnel diode. One transistor, Q84, is added to invert the drive waveform to the tunnel diode CR69. The negative tunnel diode is mounted on a gold pedestal (352-0148-00) with epoxy and is not interchangeable with the positive tunnel diode. The negative tunnel diode is made for TEKTRONIX on special order for this pulser and does not have a Tek part number. See John Addis for replacement diodes.

MAINTENANCE

Contrary to remarks in the S-52 Manual, it is possible to check the tunnel diode with a curve tracer. Remove the T.D. from the head by unscrewing the knurled holder. Set the Collector Supply Series Resistor to the lowest value and the collector supply to the lowest voltage range. Apply the + lead to the top of the positive tunnel diode and the negative lead to the pedestal. Once the T.D. changes state, do not increase the collector supply voltage. Reverse polarity for the negative tunnel diode.

The two diodes are nominally identical in characteristics except that the negative T.D. is mounted on the pedestal upside down. Peak current should be between 45 mA and 63 mA and valley current should be approximately 7.5 mA.

SECTION 3

ELECTRICAL PARTS LIST

Replacement parts should be ordered from the Tektronix Field Office or Representative in your area. Changes to Tektronix products give you the benefit of improved circuits and components. Please include the instrument type number and serial number with each order for parts or service.

ABBREVIATIONS AND REFERENCE DESIGNATORS

A	Assembly, separable or repairable
AT	Attenuator, fixed or variable
B	Motor
BT	Battery
C	Capacitor, fixed or variable
Cer	Ceramic
CR	Diode, signal or rectifier
CRT	cathode-ray tube
DL	Delay line
DS	Indicating device (lamp)
Elect.	Electrolytic
EMC	electrolytic, metal cased
EMT	electrolytic, metal tubular
F	Fuse
FL	Filter
H	Heat dissipating device (heat sink, etc.)
HR	Heater
J	Connector, stationary portion
K	Relay
L	Inductor, fixed or variable
LR	Inductor/resistor combination
M	Meter
Q	Transistor or silicon-controlled rectifier
P	Connector, movable portion
PMC	Paper, metal cased
PT	paper, tubular
PTM	paper or plastic, tubular molded
R	Resistor, fixed or variable
RT	Thermistor
S	Switch
T	Transformer
TP	Test point
U	Assembly, inseparable or non-repairable
V	Electron tube
Var	Variable
VR	Voltage regulator (zener diode, etc.)
WW	wire-wound
Y	Crystal

Ckt. No.	Tektronix Part No.	Serial/Model No. Eff	Disc	Description
				CAPACITORS
C1	290-0394-00			160 µF 50 V
C2	290-0394-00			160 µF 50 V
C3	290-0394-00			160 µF 50 V
C4	290-0527-00			15 µF 20 V
C5	290-0527-00			15 µF 20 V
C48	283-0204-00			.01 µF 50 V
C65	283-0181-00			1.8 pF 100 V
C66	283-0111-00			0.1 µF 100 V
C87	283-0028-00			0.0022 µF 50 V
C90	283-0065-00			0.001 µF 400 V
C91	283-0182-00			51 pF 400 V
C101	283-0203-00			0.47 µF 50 V
C102	283-0203-00			0.47 µF 50 V
C107	283-0111-00			0.1 µF 100 V
C109	283-0111-00			0.1 µF 100 V
C111	283-0065-00			0.001 µF 100 V
C121	283-0065-00			0.001 µF 100 V
C401	281-0613-00			10 µF 200 V
C441	283-0186-00			27 pF 50 V
C541	283-0193-00			510 pF 100 V
C651	283-0181-00			1.8 pF 100 V
C661	283-0111-00			0.1 µF 100 V
C871	283-0028-00			0.0022 µF 50 V
C901	283-0065-00			0.001 µF 100 V
C1011	283-0203-00			0.47 µF 50 V

Ckt. No.	Tektronix Part No.	Serial/Model No. Eff Disc	Description	
C1021	283-0203-00		0.47 μF	50 V
C1031	283-0203-00		0.47 μF	50 V
C1051	283-0203-00		0.47 μF	50 V
C1071	283-0111-00		0.1 μF	50 V
C1091	283-0111-00		0.1 μF	50 V
		DIODES		
CR1	152-0107-00			
CR2	152-0107-00			
CR3	152-0107-00			
CR4	152-0107-00			
CR5	152-0107-00			
CR6	152-0107-00			
CR7	152-0107-00			
CR8	152-0107-00			
CR9	152-0212-00		1N936	9 V, 5%
CR11	152-0457-00		Schotky	
CR21	152-0141-02			
CR62	152-0141-02			
CR63	152-0141-02			
CR66	152-0252-00		Snap-off, Tek made	
CR211	152-0141-02			
CR621	152-0141-02			
CR631	152-0141-02			
CR401	142-0141-02			
CR661	152-0252-00		Snap-off, Tek made	
CR901	152-0141-02			
CR911	152-0141-02			
CR931	152-0141-02			
VR109	152-0279-00		Zener	5.1 V, 5%
VR1091	152-0279-00		Zener	5.1 V, 5%
		BULBS		
DS1	150-0107-00			12 V
		JACKS		
J43	131-0274-00		Insulated, chassis mounted	
J45	131-0274-00		Insulated, chassis mounted	

Ckt. No.	Tektronix Part No.	Serial/Model No. Eff	Disc	Description			
				INDUCTORS			
L101	108-0317-00			15 μH			
LR62	108-0299-00			0.25 μH			
LR64	108-0299-00			0.25 μH			
				TRANSISTORS			
Q1	151-0208-00			2N4036			
Q2	151-0136-00			2N3053			
Q32	151-0190-00			2N3904			
Q72	151-0100-00			2N3904			
Q74	151-0190-00			2N3904			
Q80	151-0188-00			2N3906			
Q84	151-0190-00			2N3904			
Q86	151-0188-00			2N3906			
Q88	151-0188-00			2N3906			
Q90	151-0254-00			2N5308			
Q321	151-0190-00			2N3904			
Q401	151-0212-00						
Q501	151-0271-00						
Q721	151-0190-00			2N3904			
Q741	151-0190-00			2N3904			
Q801	151-0188-00			2N3906			
Q861	151-0188-00			2N3906			
Q881	151-0188-00			2N3906			
Q901	151-0254-00			2N5308			
				RESISTORS			
R1	308-0269-00			22 Ω	3 W	5%	WW
R2	308-0344-00			18.2 Ω	3 W	1%	WW
R3	308-0460-00			56 Ω	3 W	1%	WW
R4	308-0075-00			100 Ω	3 W	5%	WW
R5	315-0431-00			430 Ω	1/4 W	5%	
R6	321-0304-00			14.3 kΩ	1/8 W	1%	
R7	311-1225-00			1 kΩ vari.			
R8	321-0282-00			8.45 kΩ	1/8 W	1%	
R9	315-0622-00			6.2 kΩ	1/4 W	5%	
R10	315-0682-00			6.8 kΩ	1/4 W	5%	

Ckt. No.	Tektronix Part No.	Serial/Model No. Eff	Disc	Description			
R11	323-0152-00			374 Ω	1/2 W	1%	
R12	321-0307-00			15.4 kΩ	1/8 W	1%	
R13	321-0631-00			12.5 kΩ	1/8 W	1%	
R26	317-0153-00			15 kΩ	1/8 W	5%	
R27	317-0511-00			510 Ω	1/8 W	5%	
R28	317-0752-00			7.5 kΩ	1/8 W	5%	
R30	317-0432-00			4.3 kΩ	1/8 W	5%	
R31	317-0202-00			2 kΩ	1/8 W	5%	
R32	317-0621-00			620 Ω	1/8 W	5%	
R33	317-0752-00			7.5 kΩ	1/8 W	5%	
R34	317-0223-00			22 kΩ	1/8 W	5%	
R35	317-0912-00			9.1 kΩ	1/8 W	5%	
R36	317-0103-00			10 kΩ	1/8 W	5%	
R37	317-0242-00			2.4 kΩ	1/8 W	5%	
R38	317-0201-00			200 Ω	1/8 W	5%	
R40	315-0271-00			270 Ω	1/4 W	5%	
R41	315-0200-00			20 Ω	1/4 W	5%	
R42	315-0271-00			270 Ω	1/4 W	5%	
R43	317-0510-00			51 Ω	1/8 W	5%	
R44	317-0101-00			100 Ω	1/8 W	5%	
R45	317-0510-00			51 Ω	1/8 W	5%	
R46	317-0101-00			100 Ω	1/8 W	5%	
R47	311-0949-00			2 kΩ vari.			
R48	321-0210-00			1.5 kΩ	1/8 W	1%	Selected
R49	321-0218-00			1.82 kΩ	1/8 W	1%	
R64	317-0360-00			36 Ω	1/8 W	5%	
R65	317-0027-00			2.7 Ω	1/8 W	5%	
R66	317-0101-00			100 Ω	1/8 W	5%	
R67	317-0680-00			68 Ω	1/8 W	5%	
R68	317-0027-00			2.7 Ω	1/8 W	5%	
R70	317-0103-00			10 kΩ	1/8 W	5%	
R71	317-0681-00			680 Ω	1/8 W	5%	
R72	317-0222-00			2.2 kΩ	1/8 W	5%	
R73	317-0103-00			10 kΩ	1/8 W	5%	
R74	317-0222-00			2.2 kΩ	1/8 W	5%	
R75	317-0512-00			5.1 kΩ	1/8 W	5%	
R76	317-0101-00			100 Ω	1/8 W	5%	
R80	321-0202-00			1.24 kΩ	1/8 W	1%	
R81	317-0751-00			750 Ω	1/8 W	5%	
R82	317-0101-00			100 Ω	1/8 W	5%	

Ckt. No.	Tektronix Part No.	Serial/Model No. Eff	Disc	Description			
R83	321-0185-00			825 Ω	1/8 W	1%	
R84	317-0151-00			150 Ω	1/8 W	5%	
R85	317-0161-00			160 Ω	1/8 W	5%	
R86	321-0185-00			825 Ω	1/8 W	1%	
R87	317-0121-00			120 Ω	1/8 W	5%	
R88	317-0047-00			4.7 Ω	1/8 W	5%	
R89	321-0224-00			2.1 kΩ	1/8 W	1%	
R90	311-1279-00			500 Ω vari.			
R91	321-0047-00			30.1 Ω	1/8 W	1%	
R92	317-0241-00			240 Ω	1/8 W	5%	
R96	301-0221-00			220 Ω	1/2 W	5%	
R97	301-0271-00			270 Ω	1/2 W	5%	
R98	317-0430-00			43 Ω	1/8 W	5%	
R101	317-0202-00			2 kΩ	1/8 W	5%	
R106	317-0162-00			1.6 kΩ	1/8 W	5%	
R107	317-0271-00			270 Ω	1/8 W	5%	
R108	317-0331-00			330 Ω	1/8 W	5%	
R109	308-0236-00			85 Ω	3 W		WW
R121	317-0432-00			4.3 Ω	1/8 W	5%	
R201	315-0302-00			3 kΩ	1/4 W	5%	
R221	317-0752-00			7.5 kΩ	1/8 W	5%	
R261	317-0153-00			15 kΩ	1/8 W	5%	
R271	317-0511-00			510 Ω	1/8 W	5%	
R281	317-0752-00			7.5 kΩ	1/8 W	5%	
R301	317-0432-00			4.3 kΩ	1/8 W	5%	
R311	317-0202-00			2 kΩ	1/8 W	5%	
R321	317-0621-00			620 Ω	1/8 W	5%	
R331	317-0752-00			7.5 kΩ	1/8 W	5%	
R341	317-0223-00			22 kΩ	1/8 W	5%	
R351	317-0912-00			9.1 kΩ	1/8 W	5%	
R361	317-0103-00			10 kΩ	1/8 W	5%	
R371	317-0242-00			2.4 kΩ	1/8 W	5%	
R381	317-0201-00			200 Ω	1/8 W	5%	
R401	317-0303-00			30 kΩ			
R421	317-0103-00			10 kΩ	1/8 W	5%	
R441	317-0513-00			51 kΩ	1/8 W	5%	
R501	317-0623-00			62 kΩ	1/8 W	5%	
R521	317-0822-00			8.2 kΩ	1/8 W	5%	
R641	317-0360-00			36 Ω	1/8 W	5%	
R651	317-0027-00			2.7 Ω	1/8 W	5%	

Ckt. No.	Tektronix Part No.	Serial/Model No. Eff	Disc	Description			
R661	317-0101-00			100 Ω	1/8 W	5%	
R671	317-0680-00			68 Ω	1/8 W	5%	
R681	317-0027-00			2.7 Ω	1/8 W	5%	
R711	317-0361-00			360 Ω	1/8 W	5%	
R721	317-0222-00			2.2 kΩ	1/8 W	5%	
R741	317-0222-00			2.2 kΩ	1/8 W	5%	
R751	317-0103-00			10 kΩ	1/8 W	5%	
R801	321-0202-00			1.24 kΩ	1/8 W	1%	
R811	317-0751-00			750 Ω	1/8 W	5%	
R831	321-0185-00			825 Ω	1/8 W	1%	
R851	317-0161-00			160 Ω	1/8 W	5%	
R861	321-0185-00			825 Ω	1/8 W	1%	
R871	317-0121-00			120 Ω	1/8 W	5%	
R881	317-0047-00			4.7 Ω	1/8 W	5%	
R891	321-0224-00			2.1 kΩ	1/8 W	1%	
R901	311-1279-00			500 Ω vari.			
R911	321-0047-00			30.1 Ω	1/8 W	1%	
R961	301-0221-00			220 Ω	1/2 W	5%	
R971	301-0271-00			270 Ω	1/2 W	5%	
R981	317-0430-00			43 Ω	1/8 W	5%	
R1031	317-0101-00			100 Ω	1/8 W	5%	
R1051	317-0101-00			100 Ω	1/8 W	5%	
R1061	317-0162-00			1.6 kΩ	1/8 W	5%	
R1071	317-0271-00			270 Ω	1/8 W	5%	
R1081	317-0331-00			330 Ω	1/8 W	5%	
R1091	308-0236-00			85 Ω	3 W		WW
			SWITCHES				
SW1	260-0834-00						Toggle
SW2	260-0834-00						Slide
SW3	260-0834-00						Toggle
			TRANSFORMERS				
T1	120-0581-00						Power
T2	120-0310-00			3T			Toroidal
T3	120-0310-00			3T			Toroidal

Ckt. No.	Tektronix Part No.	Serial/Model No. Eff	Disc	Description
		INTEGRATED CIRCUITS		
U20	156-0111-00			
U30B	156-0048-00			
U30C	156-0048-00			
U30D	156-0048-00			
U101	156-0101-00			
U201	156-0111-00			
U301	156-0048-00			

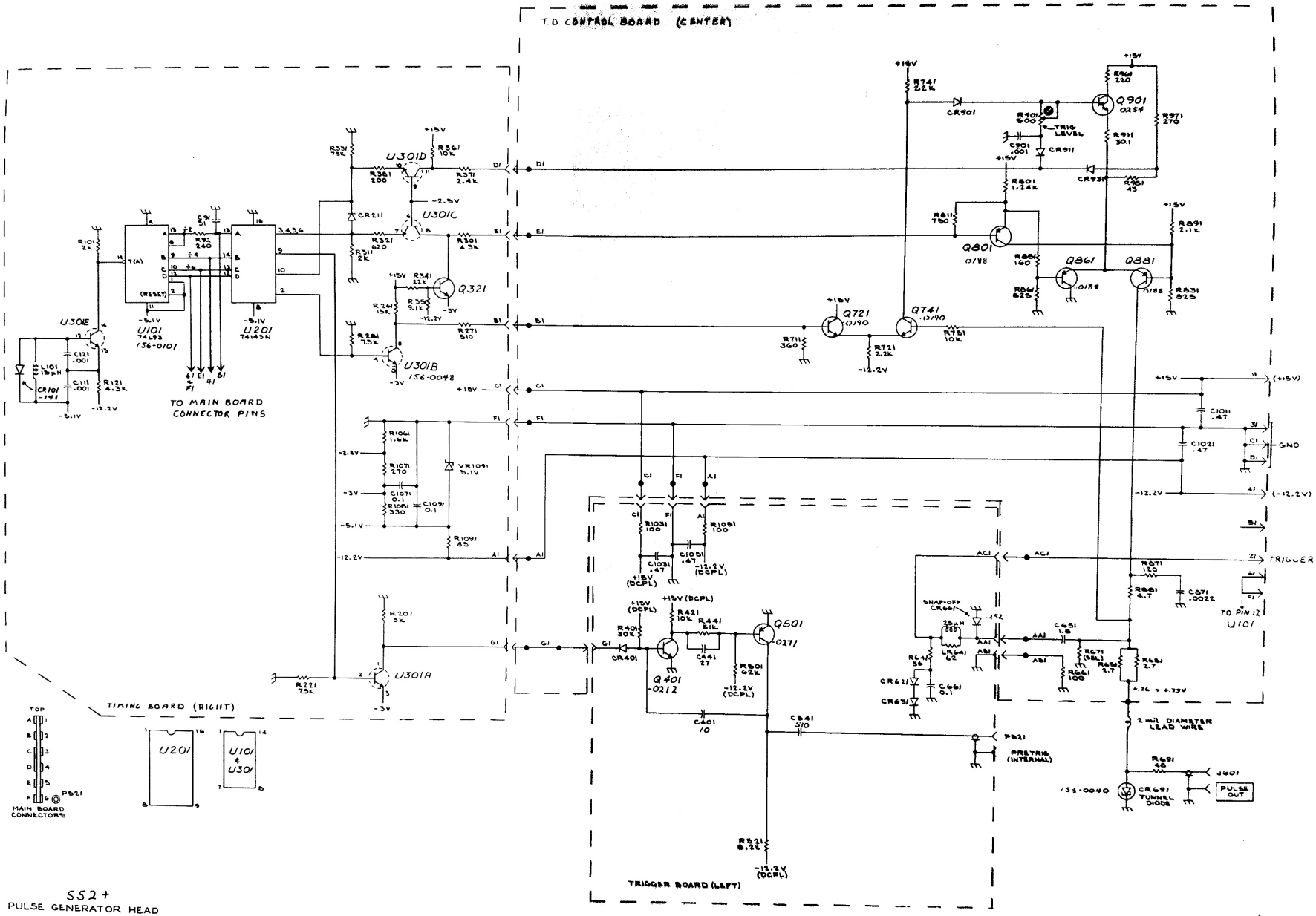

S52+
PULSE GENERATOR HEAD

SCHEMATIC hq 0371

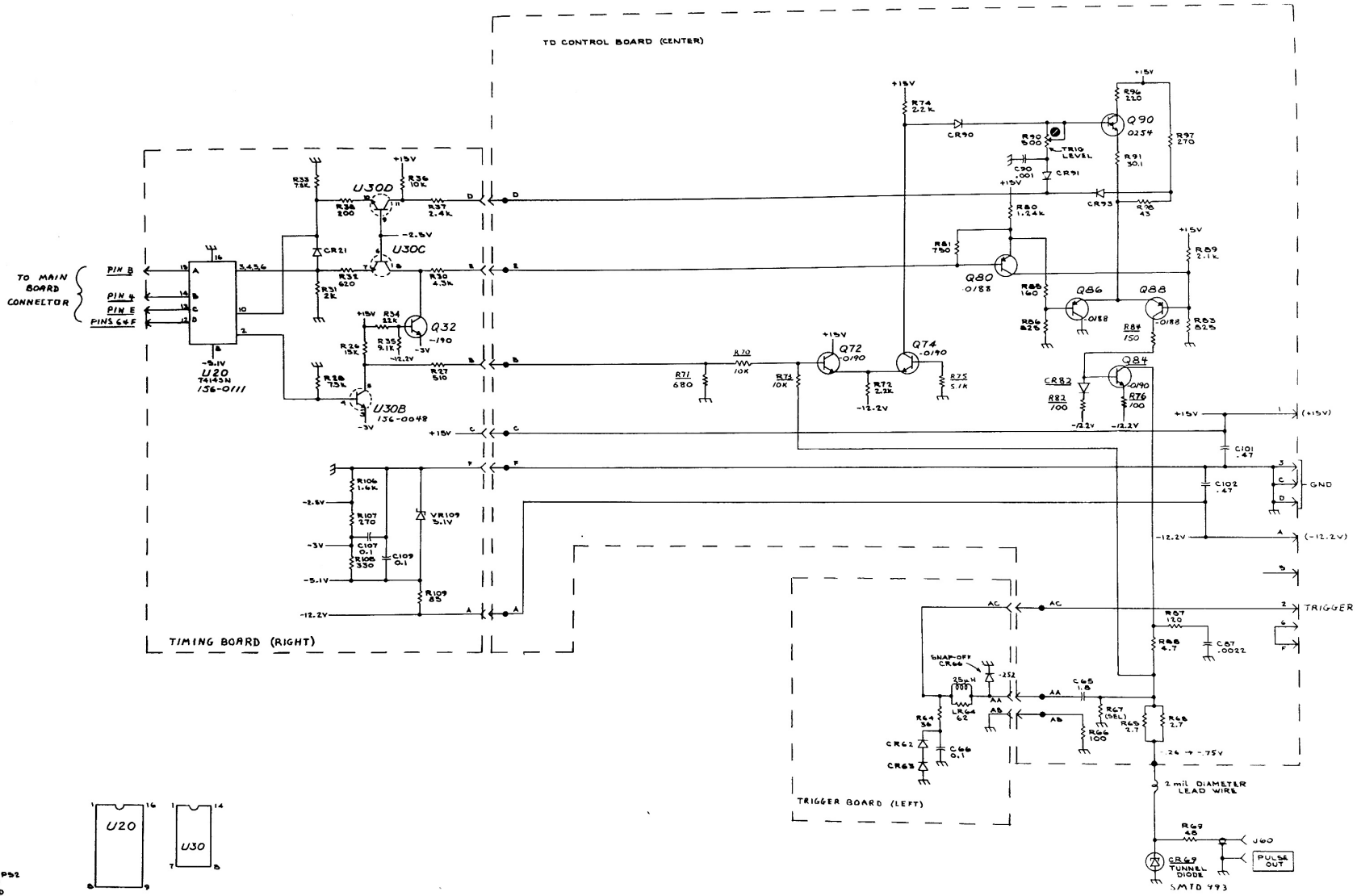

S52 -
PULSE GENERATOR HEAD

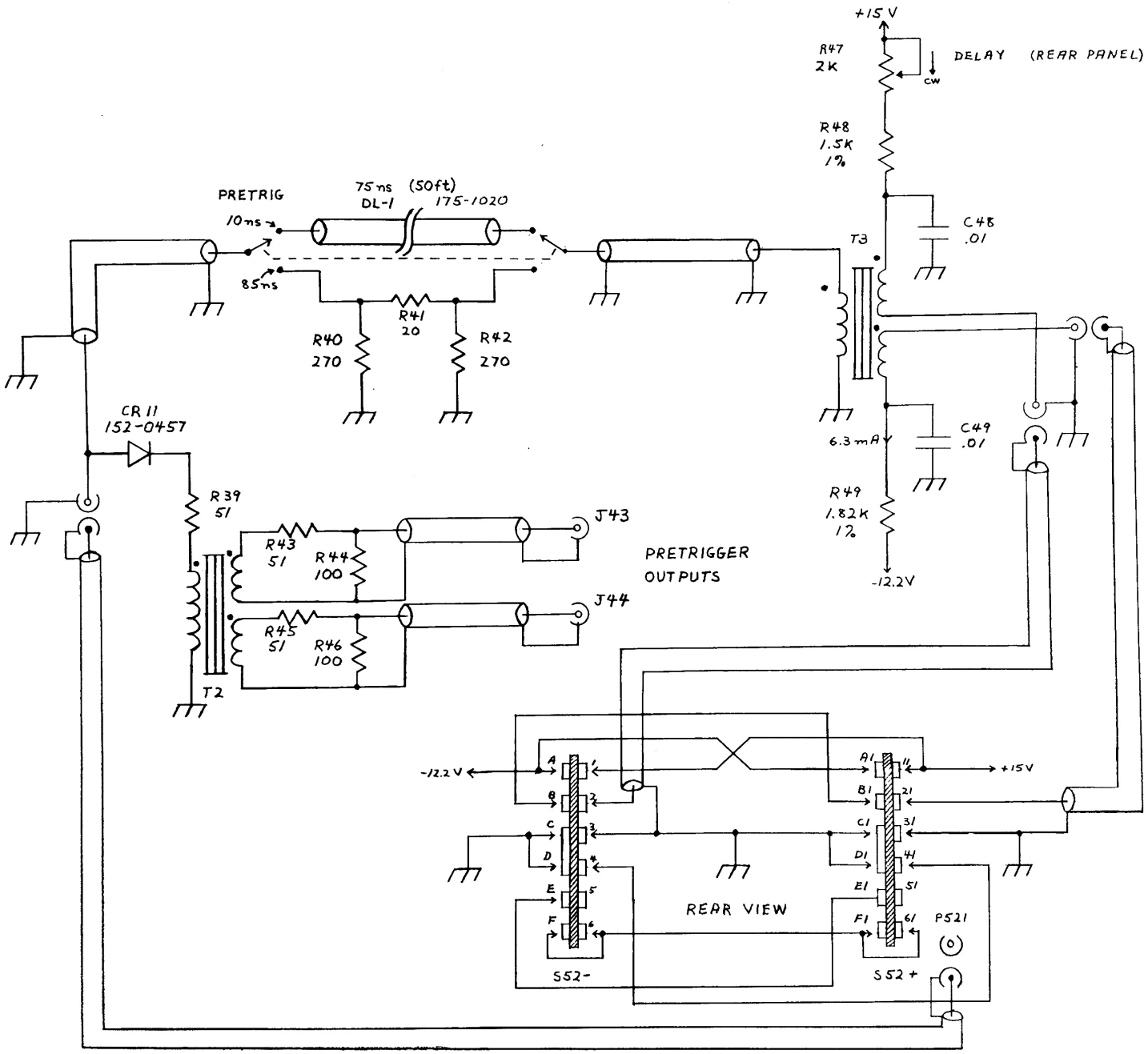

POWER AND SIGNAL DISTRIBUTION

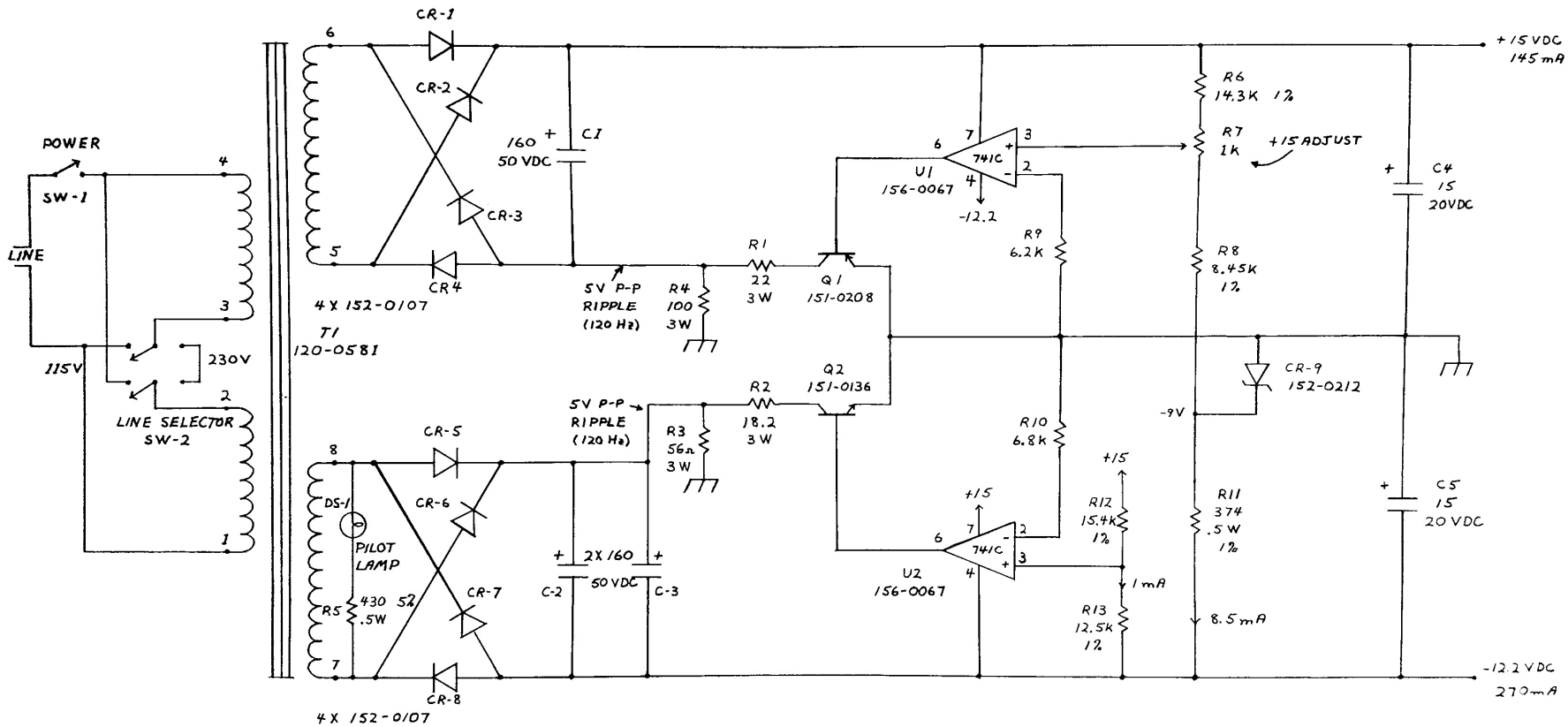

POWER SUPPLY