INSTRUCTION MANUAL

Serial Number B020152

4601 HARDCOPY UNIT

Tektronix, Inc. ● P. O. Box 500 ● Beaverton, Oregon 97005 ● Phone 644-0161 ● Cables: Tektronix

070-1069-00

1070

SECTION 1
SPECIFICATION

Change information, if any, affecting this section will be found at the rear of the manual.

General Information

The 4601 Hardcopy Unit is designed to make a facsimile of data stored on the screen of the 611 Storage Display Unit or with the T4002 or T4005 Graphic Computer Terminal Display Units. Copies can also be made from other Tektronix, Inc., storage display instruments such as the 601 Display Unit and the 4501 Scan Converter, however, custom modifications are required.

The hardcopy[1] is produced by electronically scanning the storage target of the display unit using the ramp and pulse generators in the 4601. An electrical signal is taken from the display unit storage target electrode and fed to the Z axis of a line scan CRT driven by the same ramp generators. A fibre optic faceplate on the CRT couples the light output from the CRT phosphor to the recording paper in the 4601. The latent image is then heat developed in the 4601. The hardcopy is available approximately 18 seconds after the initiation of the original copy command. Additional 11 inch copies can be produced at a rate of one every 10 seconds.

[1] **The 4601 is designed to use Minnesota Mining and Manufacturing Company Type 777 dry silver paper.**

The 4601 is installed by looping through the 4601 the X, Y and Z leads from the display signal source to the display unit. When a copy command is given, the leads from the display signal source to the display unit are interrupted inside the 4601. The leads to the display unit are then connected to the appropriate signals generated by the 4601.

The electrical characteristics described in Tables 1-1 and 1-2 are valid over the stated environmental range for instruments calibrated at an ambient temperature of +20°C to +30°C and after a 20-minute warmup period unless otherwise noted.

TABLE 1-1

TIMING

Characteristic	Performance Requirement
Outputs	
Fast Ramp	
Duration	4 ms to 8 ms
Amplitude	1 V ±25% or 5 V ±25%
Slow Ramp	
Duration	4 s to 8 s
Amplitude	1 V ±25% or 5 V ±25%
Z-Axis Pulse	
Period	4.5 μs to 10 μs
Width	200 ns to 500 ns
Amplitude	1.3 V ±40%
Copy Gate	4 V to 5 V (ready to copy)
	0 V to 0.2 V (during copy interval)
Position Range	At least +20% and −20% of full deflection
Inputs	
Remote Copy Command	Contact closure to ground
Minimum pulse width	5 μs
Repeat Time	1 s after completion of slow ramp (see slow ramp above)

TABLE 1-2

DEFLECTION SYSTEM

Characteristic	Performance Requirement
Total Horizontal Deflection	16 cm or less to at least 20 cm at 3500 V CRT cathode voltage
Horizontal Position Range	At least + and −2.0 cm from CRT electrical center
Resolution (With 3M Type 777 paper)	At least 4000 clearly legible characters based on a 90 X 70 mil matrix. (Derated only by the Storage Display Unit.)

TABLE 1-3

CRT DISPLAY

Characteristic	Performance Requirement
Type	Magnetic deflection with P31 phosphor
Display Area	0.20 inches by 8.14 inches
Luminance Uniformity	1.4 or less

TABLE 1-4

POWER SOURCE

Characteristic	Performance Requirement
Factory Wired Options	
Line Voltage Ranges	
115 V	90 to 136 VAC

TABLE 1-4 (cont)

Characteristic	Performance Requirement
Line Frequency	115 VAC, 60 Hz
	115 VAC, 50 Hz
Maximum Power Consumption	
115 VAC, 60 Hz	
Start-up (40 s)	1450 W
Normal Operation	220 to 520 W
Standby	100 W
Fuse Data	
Line (total unit)	15 A fast blow
Electronics Unit Only	1 A slow-blow
Thermo electric Cooling Unit Only	1.6 A slow-blow
Drive Motor	0.7A slow-blow

TABLE 1-5

PHYSICAL CHARACTERISTICS

Characteristic	Information
Finish	Tan-vinyl painted mainframe and plug-in
Dimensions	
Cabinet Model (overall)	
Height	11.0 inches
Length	24.0 inches
Width	16.8 inches

ACCESSORIES

Standard accessories supplied with this instrument can be found on the last page of the Mechanical Parts List Illustrations. For additional accessories, see the current Tektronix, Inc., catalog.

SECTION 2
OPERATING INSTRUCTIONS

Change information, if any, affecting this section will be found at the rear of this manual.

TABLE OF CONTENTS

GENERAL

Cover Removal

The top cover of the instrument is held in place by four slotted fasteners, while the bottom cover is held in place by six slotted fasteners. To remove the covers, turn the fasteners approximately one-half turn and lift the cover off the instrument. The covers protect against dust in the interior of the instrument.

WARNING

Dangerous potentials exist at several points throughout this instrument. When it is operated with the covers removed, do not touch exposed connections or components. Some transistors have elevated cases. Disconnect power before cleaning the instrument or replacing parts.

Processor Cleaning and Lubrication

Cleaning. Inspect after each roll of paper and clean if necessary. Chemical powder, from the paper, builds up on the interior surfaces and in the plastic tubing, which ducts much of the powder to the fan in the lower part of the processor. A vacuum cleaner and a soft paint brush are the recommended cleaning tools.

WARNING

Do not clean interior of processor with compressed air, as this may cause the chemical powder to be blown into the eyes.

Lubrication. Approximately every 250 hours of operation, several drops of machine oil should be added to the felt reservoirs on the processor drive motor. The manufacturer of the motor recommends the use of DTE heavy medium turbine oil.

Approximately every 1500 hours of operation, a small amount (1 tablespoon) of oil should be added to the felt reservoir of the processor gearbox. To do this, remove the processor bottom cover and the screw in the side of the processor gearbox. The oil will be best absorbed if the processor is placed on its front-panel and the oil added slowly to the felt. The oil recommended by the manufacturer is Lubriplate[1] oil

NOTE

Since both the drive motor and gearbox require periodic lubrication, a small amount of oil leakage may occur. Excessive oil leakage indicates over-oiling. No lubrication is required on other bearing surfaces in the instrument.

Processor Safety Clutch

The coupling between the drive motor and the gearbox is also a safety clutch, which will trip if the torque load on the gearbox exceeds a safe level.

(SN B020000-up)

The clutch will automatically reset when the 4601 is turned off and the cause of the excessive torque load is removed.

(SN B010100-B019999)

If the safety clutch trips, the cause of the higher-than-normal torque loading should be located and corrected. The safety clutch can then be reset by snapping the two pivot arms, on the gearbox side of the coupling, to the straight out position so they will engage the drive pins on the drive motor side of the safety clutch.

[1] **Registered trademark of the Fiske Brothers Refining Co.**

TABLE 2-1

Internal 4601 Connections And Adjustments For Interfacing To Storage Display Unit

Step No. and Operation	Storage Display Unit				
	Standard 611	611 Mod 162C	T4002	T4005	601 and 4501 with Hardcopy Modification
4a. Set:					
Slow Ramp Rate	No change — factory set for 8½ X 11 copy				No change
Fast Ramp Rate	No change — factory set for 6 ms				Change to 7.5 ms
Interrogation Pulse Rate, R193	No change — factory set for 6 μs				Change to >10 μs
4b. Connect on Input Switch board:					
Fast Ramp (red connector) to:	X	Y			
Slow Ramp (orange connector) to:	Y	X			
Set: Dfl Amp Rev Ramp switch	Right Position	Left Position			
4c. Set: 1 V/5 V switch	1 V full deflection		5 V full deflection	1 V full deflection	
4d. Set: Slow Ramp Pos. switch	Type 611 switches SW202 or SW204 set to their right position corresponds to the 4601 switches S128 or S275 (S278) set to their up position. Set 4601 switches to match Type 611 switches.		Upper Position		
Fast Ramp Pos. switch			Upper Position		

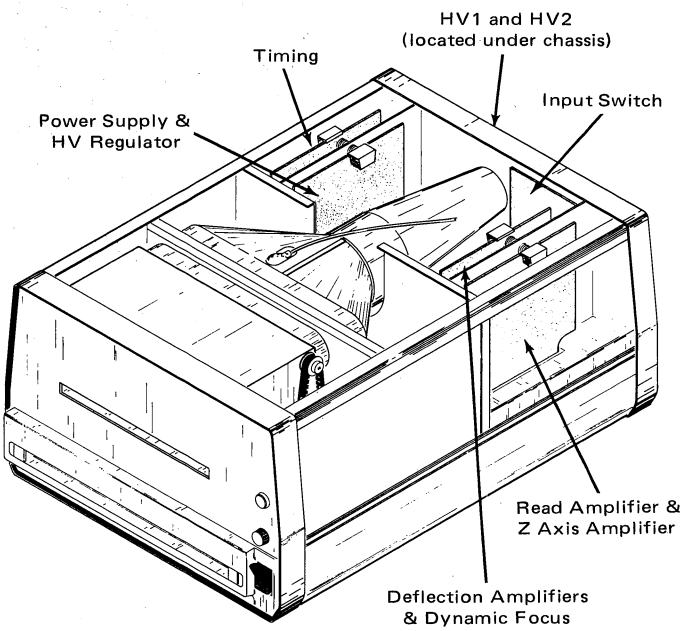

4601 Circuit Card and Board Locations.

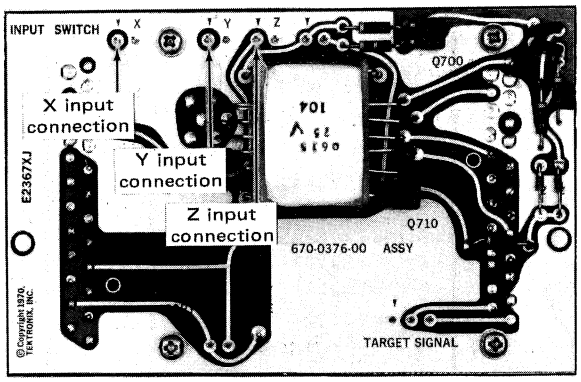

Input Switch Circuit Board SN B020000-up)

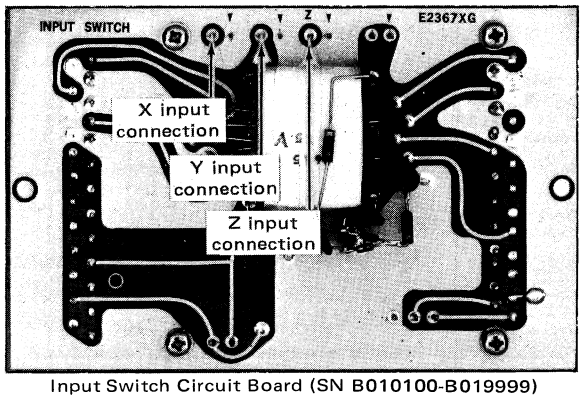

Input Switch Circuit Board (SN B010100-B019999)

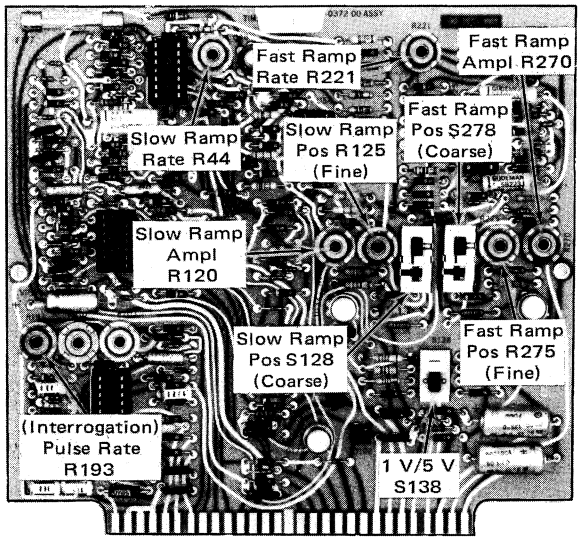

Timing Circuit Card (SN B010100-B019999

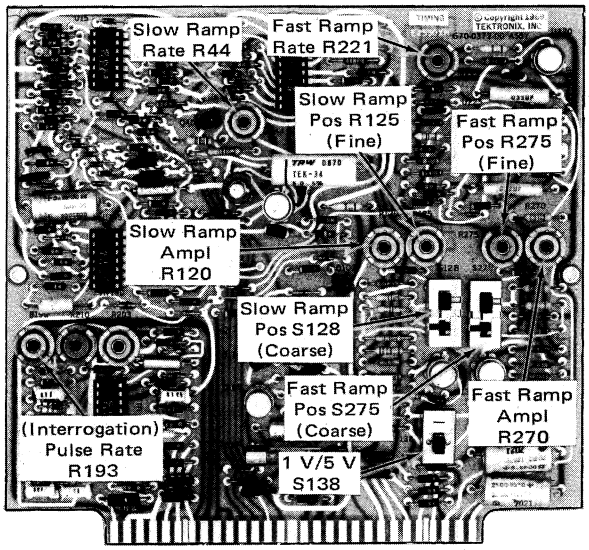

Timing Circuit Card (SN B020000-up)

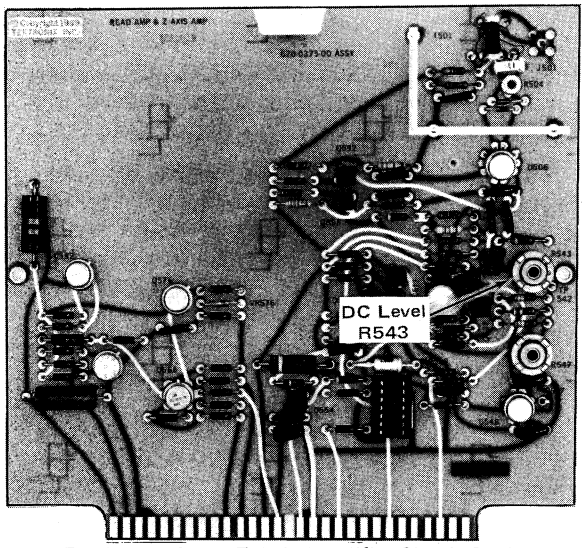

Read Amplifier & Z Axis Amplifier Circuit Card
(SN B010100-B019999)

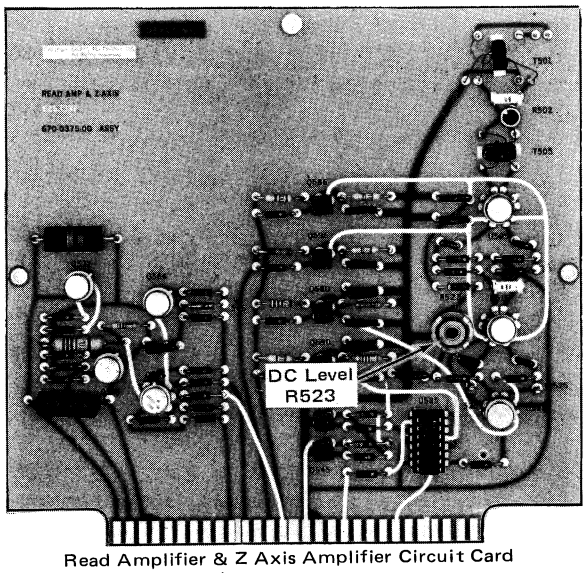

Read Amplifier & Z Axis Amplifier Circuit Card
(SN B020000-up)

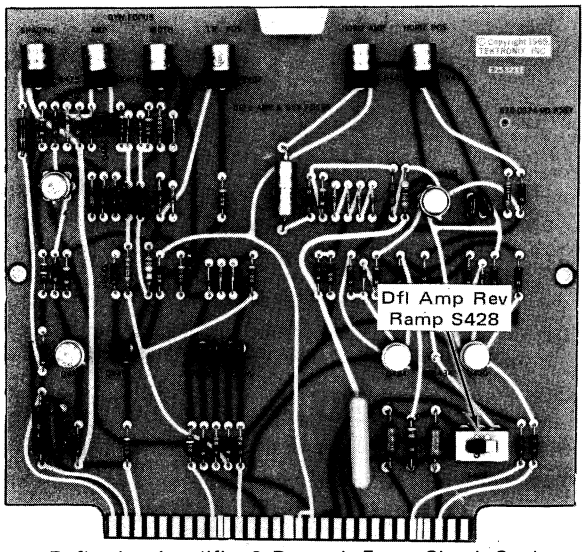

Deflection Amplifier & Dynamic Focus Circuit Card
(SN B010100-B019999)

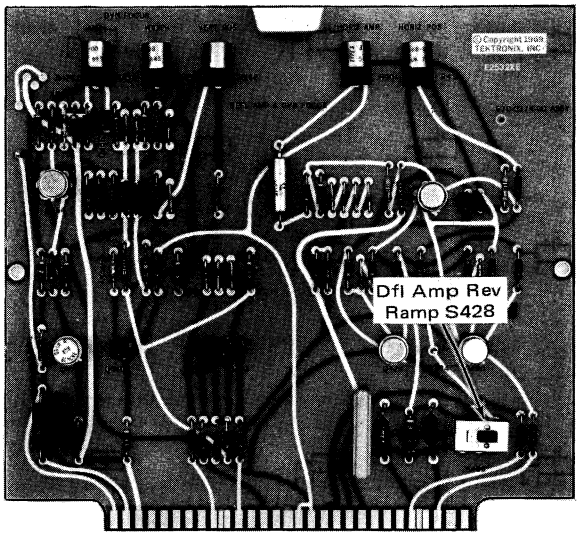

Deflection Amplifier & Dynamic Focus Circuit Card
(SN B020000-up)

FIRST-TIME OPERATION

CAUTION

Processing Temperature Control must be adjusted in small increments (1/8 turn). If the above is not adhered to, the non-resetting thermal fuse will blow and the 4601 will become inoperative.

Heater temperature is correctly set when a fully exposed piece of recording paper is turned uniformly and completely black, or when making copy, the exposed areas are black.

Heater temperature is too high if, when making copies, the exposed areas are turned brown rather than black, and the unexposed areas become darkened.

The following steps indicate the first-time operation set-up order. Detailed information about a particular procedure may be found by using the Table of Contents listing for this section.

NOTE

To interface the 4601 with a Type 611, T4002 storage display unit, or a T4005 storage display unit, some minor adjustments will be necessary.

To interface the 4601 with a Type 601 or 4501, a change in the 4601 slow and fast ramps and the interrogation pulses will be required (see Table 2-1).

The adjustments required to make the 4601 produce small size copies, or to partially scan the storage display unit will be covered later in this section.

The thermoelectric cooler system is used to keep paper supply cool and thereby extend its life. The cooler is not switched by the POWER ON switch but operates whenever the processor is installed (S304 closed) and the 4601 is plugged in.

1. Remove Processor and top cover from 4601 mainframe.

2. Set Voltage Range Selector.

3. Connect cables from Signal Display Source and Storage Display Unit to 4601 Hard Copy Unit.

4. Refer to Table 2-1 for this step.

5. Turn-on 4601.

6. Turn the Intensity 3 control on the Storage Display Unit about 3/4 clockwise.

7. Push 4601 COPY pushbutton and make a Preliminary adjustment of:

slow ramp position, R125
slow ramp amplitude, R120
fast ramp position, R275
fast ramp amplitude, R270

so the scan completely covers the storage area of the Storage Display Unit.

8. Turn the Intensity 3 control on the Storage Display Unit counterclockwise until the scan does not store.

9. Adjust the slow ramp position adjustment, slow ramp amplitude adjustment, fast ramp position adjustment and fast ramp amplitude adjustment controls so the 4601 scan covers the storage area of the Storage Display Unit to within 1/16 inch of the edge of the quality area. Scanning a larger area may cause an outline of the storage target area to appear on the copy.

10. Readjust the Storage Display Unit Intensity 3 control to insure that several scans will not store.

11. Adjustment of the video signal DC Level on the Read Amplifier and Z Axis Amplifier circuit card may not be necessary at this time, but will ensure that maximum signal and minimum noise are produced on the 4601 copies.

Adjustment Procedure:

a. Erase the Storage Display Unit.

b. Push 4601 COPY pushbutton.

c. While visually checking the 4601 CRT during the scanning of the erased Storage Display Unit, adjust the video signal DC Level (refer to Table 2-1) as close as possible to the noise level (noise will cause the 4601 CRT to become unblanked and show a trace), but so no noise is shown on the 4601 CRT.

12. Turn off 4601.

CAUTION

Whenever a change is made that will affect the 4601 scanning of the Storage Display Unit, a readjustment of the Storage Display Unit Intensity 3 control may be necessary.

Eventually it will be necessary to readjust the video signal DC Level control as described in step 11.

13. Reinstall the Processor in the 4601 mainframe and connect its power cable, but leave it slid out so that it can be loaded with paper.

14. Load Processor with paper, then slide Processor back into 4601 mainframe.

Operating Voltage

The nominal operating line voltage and frequency of each 4601 is determined by the parts used at the time of manufacturing the instrument. If it is desired at a later time to change the nominal line voltage or frequency, contact your local Tektronix, Inc. Applications Engineer.

While the nominal operating line voltage is factory determined, the line voltage range may be selected to fit the line voltage being used. This is accomplished with the use of a quick-change voltage range-selector plug, located under the fuse cover on the rear panel. By changing this plug, one of three line voltage operating ranges may be selected. Table 2-2 lists all the voltage ranges that enable the instrument DC power supplies to regulate properly.

TABLE 2-2

Factory Wired Nominal Line-Voltage	Voltage Range Selector Plug Position	Nominal Line (center) Voltage	Line Voltage Operating Range
115 V	LO (Low)	100 VAC	90 to 110 VAC
	M (Medium)	115 VAC	104 to 126 VAC
	HI (High)	124 VAC	112 to 136 VAC

To convert to a different line voltage, proceed as follows:

1. Disconnect the 4601 from the power source.

2. Unscrew the two captive screws holding the fuse cover. Remove the cover and attached fuses.

3. To change the line-voltage operating range (LO, M or HI), pull out the Voltage Range Selector plug and insert it in the desired hole locations. Select a range with a center voltage (see column 3 in Table 2-2) closely corresponding to the line voltage that will be applied in regular instrument operation.

4. Re-install the cover with two captive screws and fuses. Be sure the cover fits firmly against the rear panel. This assures that the fuses are seated properly in fuse clips.

5. Before applying power to the instrument, check that the indicating tab on the voltage selector plug is protruding through the proper hole in the cover for the correct operating range.

OPERATING CONTROLS AND CONNECTORS

A brief description of the function or operation of the front and rear panel controls and connectors and the internal controls follows.

Front Panel

POWER ON (rocker switch)	Applies power to the instrument.

NOTE

The thermoelectric cooler system is used to keep the paper supply cool and thereby extend its life. The cooler is not switched by the POWER ON switch but operates whenever the processor is installed (S304 closed) and the 4601 is plugged in.

CONTRAST	Controls intensity of CRT writing beam and hence darkness of image on hard copy.
COPY (pushbutton)	Initiates the command to produce a copy.

Rear Panel

Voltage Range Selector Assembly	Switching assembly to select the line voltage range. The assembly also includes the line fuse and electronics unit fuse. (See Operating Voltage, as described previously in this section.)
Rear panel connectors	See Tables 2-3, 2-4 and 2-5.

TABLE 2-3

REAR PANEL INPUT SIGNAL CONNECTOR J705

Name	Pin No.	Function
X	1	X-axis signal from signal display source to X-axis input of storage display unit via 4601 relay board, see Fig. 2-1.
	2, 3, 5, 14, 16, 17	Ground
Z	4	Z-axis signal from signal display source to Z-axis input of storage display unit via 4601 relay board, see Fig. 2-1.

TABLE 2-3 (cont)

Name	Pin No.	Function
	6, 7, 8, 11, 19, 20, 21, 22, 23	Wired straight through to same pin numbers on J700.
	9, 12, 13, 25	Blank
Copy Gate	10	SN B020000—up—4601 signal which is at 5 V during the time no copy is being made and drops to about 0.2 V during, and for 1 s after, the slow ramp run-up. Provided to inform equipment interconnected with the 4601, when the 4601 is making copy. SN B010100—B019999—4601 signal which is at 5 V during the time no copy is being made and drops to about 0.2 V during the time copy is being made. Provided to inform equipment interconnected with the 4601, when the 4601 is making copy.
Y	15	Y-axis signal from signal display source to Y-axis input of storage display unit via 4601 relay board, see Fig. 2-1.
Erase Interrupt	18	One side of a normally closed SPST switch, mounted on 4601 relay board, which opens during copy making time. Pin 18 of J700 is other side of switch.
Remote Copy	24	When grounded it initiates a copy command. > 5 μs negative pulse to ground.

TABLE 2-4

OUTPUT REAR PANEL SIGNAL CONNECTOR J700

Name	Pin No.	Function
X	1	X-axis signal from signal display source, or when copy is being made a X-axis signal from 4601, to the storage display unit, see Fig. 2-1.

TABLE 2-4 (cont)

Name	Pin No.	Function
	2, 3, 5, 14, 16, 17	Ground
Z	4	Z-axis signal from signal display source, or when copy is being made a Z-axis signal from 4601, to the storage display unit, see Fig. 2-1.
	6, 7, 8, 11, 19, 20, 21, 22, 23	Wired straight through to same pin numbers on J705.
Closure To Ground	9	One side of a normally open SPST switch which closes to ground during copy making time.
	10, 24	Blank
Target Shield	12	Target lead shield of 4601.
Target	13, 25	Information pulses from the Storage Display Unit.
Y	15	Y-axis signal from signal display source, or when copy is being made, a Y-axis signal from 4601 to the storage display unit, see Fig. 2-1.
Erase Interrupt	18	One side of a normally closed SPST switch, mounted on 4601 relay board, which opens during copy making time. Pin 18 of J705 is other side of switch.

TABLE 2-5

REAR PANEL BNC CONNECTORS

Name and Circuit Number	Function
SPARE J710	Spare connector
COPY GATE J711	See Table 2-3 pin 10 J705 description.
REMOTE COPY J712	See Table 2-3 pin 24 J705 description.

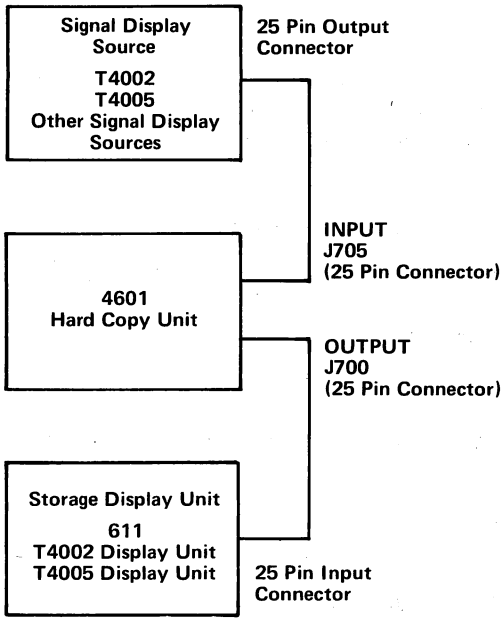

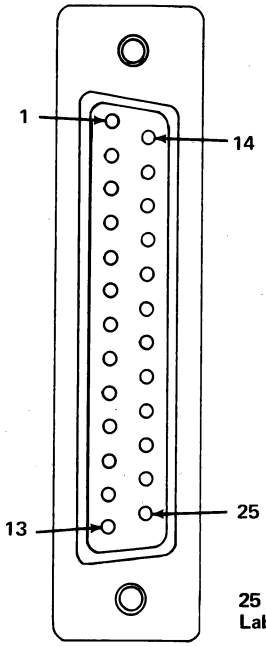

25 Pin Connector Pin Labelling

	FUNCTION						
	Signal Display Source		4601 Hardcopy Unit		Storage Display Unit		
25 Pin Connector	T4002 J251	T4005 J101,J102 J103,J104	INPUT J705	OUTPUT J700	611 J340	T4002 J340	T4005 J340
1	X	X	X	X	X	X	X
2	X Gnd	X Gnd	X Gnd	X Gnd	X Gnd	X Gnd	X Gnd
3	Y Gnd	Y Gnd	Y Gnd	Y Gnd	Y Gnd	Y Gnd	Y Gnd
4	Z	Z	Z	Z	Z	Z	Z
5	Z Gnd	Z Gnd	Z Gnd	Z Gnd	Z Gnd	Z Gnd	Z Gnd
6		Non-Store	Internally Connected		Non-Store	Non-Store	Non-Store
7	Erase Interval	Erase Interval	Internally Connected		Erase Interval	Erase Interval	Erase Interval
8	Intensity 2	Write Thru	Internally Connected		Write Thru	Intensity 2	Write Thru
9				Closure To Ground	Intensity 3	Intensity 3	Intensity 3
10	Print Busy		Copy Gate				
11			Internally Connected				
12				Target Shield	Target Shield	Target Shield	Target Shield
13				Target	Target	Target	Target
14	X Gnd	X Gnd	X Gnd	X Gnd	X Gnd	X Gnd	X Gnd
15	Y	Y	Y	Y	Y	Y	Y
16	Y Gnd	Y Gnd	Y Gnd	Y Gnd	Y Gnd	Y Gnd	Y Gnd
17	Z Gnd	Z Gnd	Z Gnd	Z Gnd	Z Gnd	Z Gnd	Z Gnd
18	Erase	Erase	Erase Interrupt	Erase Interrupt	Erase	Erase	Erase
19	Program Gnd	Program Gnd	Internally Connected		Program Gnd	Program Gnd	Program Gnd
20	View	View	Internally Connected		View	View	View
21	Send		Internally Connected				
22		Write Only	Internally Connected				Write Only
23			Internally Connected				
24	Remote Copy Command		Remote Copy				
25				Target	Target	Target	Target

Fig. 2-1. Connections between Signal Display Source, 4601 Hardcopy Unit, and Storage Display Unit.

TABLE 2-6

CIRCUIT CARD SWITCHES

Circuit Card Name	Switch Name and Circuit No.	Function
Timing,	Slow Ramp Position S-128; Fast Ramp Position, S275 (S278)	Select the starting origin for the 4601 to match the Storage Display Unit starting origin. *NOTE* *4601 Slow and Fast Ramp Position switches must be set so as to have the same origin position as the Storage Display Unit.*
	1 V/5 V, S-138A & B	Selects the amplitude of the 4601 slow and fast ramps to match the vertical and horizontal input deflection factors of the Storage Display Unit.
Deflection Amplifiers and Dynamic Focus	Deflection Amplifiers Reverse Ramp S-428	Reverses the polarity of the output fast ramp to the deflection coil.

HARD COPY MATERIALS

Paper Characteristics

3M[1] Type 777 dry-silver direct print paper, which the 4601 is designed to use has the image stability normally associated with wet-process photosensitive papers and the convenience of a dry print paper. The paper may be written upon with pen or pencil with the pencil being erasable.

The light-exposed image on the 3M Type 777 paper is developed with heat and will remain stable in normal environmental conditions. Temperatures above about 55°C (130°F) and high humidity tend to darken the background of the paper, but the image remains readable. Refer to Table 2-7 for additional 3M Type 777 paper characteristics.

Paper Storage

Unexposed paper. The shelf life of the unexposed rolls of paper is six months, providing the paper is not removed from its protective wrapper and is stored at room temperature.

Exposed paper. No special precautions need be taken. It should be remembered that temperatures above about 55°C (130°F) and high humidity levels will tend to darken the background.

TABLE 2-7

3M TYPE 777 PAPER CHARACTERISTICS

Characteristic	Information
Paper Thickness	0.003 inch
Development Conditions	2 to 6 seconds at 260°F to 285°F
Roll Size	8 1/2 inches x 500 feet

Substitute Papers

If the 4601 is to be operated in an adverse temperature environment, one in which the 3M Type 777 dry-silver paper would not produce good copy, the 4601 can be adapted to use photo sensitive[2] types of direct print papers. Information about adapting the 4601 to use photo sensitive papers and what papers may be used can be obtained from the local Tektronix, Inc., Applications Engineer.

EQUIPMENT CONNECTIONS

General

A cable (Tektronix Part No. 012-0258-00) carries the signals from the signal display source to the input connector J705 on the 4601. If the 4601 is off, or on, but not making copy, these signals are fed to the output connector J700 and through another cable to the storage display unit. In other words, the signals from the signal display source to the storage display unit are just coupled through the 4601.

When a copy command is given the X, Y, and Z signals going to the display unit from the display signal source via the 4601 are switched, by a relay inside the 4601, from the display signal source to the corresponding signals inside the 4601. Refer to Tables 2-3, 2-4 and 2-5 and Fig. 2-1 for additional details.

Storage Display Unit Scanning Direction

Depending upon the scanning direction of the storage display unit, some internal connections in the 4601 may have to be changed. Table 2-8 indicates the necessary

[1] Registered trademark of the Minnesota Mining and Manufacturing Company.

[2] Photo sensitive papers can be obtained from suppliers such as; Agfa-Gevaert, Consolidated Electrodynamics, DuPont, Eastman Kodak, and Xerox.

changes required so as to always keep the slow ramp scanning the longer axis of the storage display unit.

TABLE 2-8

Scanning Direction Changes

Scanning Direction of Slow Ramp	Input Switch Circuit Board, Fig. 2-5		Deflection Amplifiers and Dynamic Focus Circuit Card, Fig. 2-7
	Fast Ramp (Red) Connector Connection	Slow Ramp (Orange) Connector Connection	Deflection Amplifier Reverse Ramp S-428 Position
Horizontal (X-axis direction)	Y-input	X-input	Left Position
Vertical (Y-axis direction)	X-input	Y-input	Right Position

Storage Display Unit Display/Copy Size

Full Copy Size (8 1/2 inches X 11 inches)

Set the slow ramp, fast ramp and interrogation signals to the rates listed in Table 2-9.

TABLE 2-9

Storage Display Unit	4601 Signal Rate		
	Slow Ramp	Fast Ramp	Interrogation Pulse
Standard 611, 611 MOD 162C, T4002, T4005	9 seconds	6 milli-seconds	6 microseconds
601, 4501	9 seconds	7.5 milli-seconds	Slowest possible rate; >10 micro-seconds.

Half Copy Size (6 inches X 8 1/2 inches), Full Storage Display Unit Scan

To obtain half copy size, it is necessary to change R70[1] to 2.49 kΩ and R60[2] to 16.2 kΩ. The R70[1] change assures that the paper transport starts before the scanning starts, while R60[2] change assures that all the exposed paper passes the cutter bar before the paper is cut.

The actual copy length is adjusted by the Slow Ramp Rate control.

Half Copy Size (6 inches X 8 1/2 inches), Half Storage Display Unit Scan

To obtain half copy size, it is necessary to change R70[1] to 2.49 kΩ and R60[2] to 16.2 kΩ. The R70[1] change assures that the paper transport starts before the scanning starts, while the R60[2] change assures that all the exposed paper passes the cutter bar before the paper is cut.

The actual copy length is adjusted by the Slow Ramp Rate control.

To obtain half scan of the Storage Display Unit it will be necessary to reduce the size of R121 to a value between 2.5 kΩ and 2 kΩ.

CAUTION

Whenever a change is made that will affect the 4601 scanning of the Storage Display Unit, a readjustment of the Storage Display Unit Intensity 3 control may be necessary.

Eventually it will be necessary to readjust the video signal DC Level control as described in step 11 of the First-Time Operation procedure of this manual.

PROCESSOR OPERATION

Processor Removal. Refer to Fig. 2-2.

Paper Cassette Loading. Refer to Fig. 2-3.

TO SLIDE OUT FOR LOADING

1. Pull both processor latches out.
2. Pull processor outward with processor latches until slideout track stop latches snap into their holes.

TO SLIDE IN AFTER LOADING

1. Push in with processor latches until processor latches push in to their original position in front panel.

TO REMOVE

1. Do steps 1 and 2 of To Slide Out For Loading.
2. Disconnect processor power cable.
3. Press slideout track stop latches and remove processor.

TO INSTALL

1. Pull the slideout track intermediate sections out to the fully extended position.
2. Insert the processor chassis mounted slideout sections into the intermediate sections.
3. Push processor toward mainframe until slideout stop latches snap into their holes.
4. Connect processor power cable.
5. Do step 1 of To Slide In After Loading.

Fig. 2-2. Processor removal and installation instruction for paper cassette loading and maintenance.

[1] R70—SN B010100-B019999

[2] R60—SN B010100-B019999

STORAGE DISPLAY UNIT ADJUSTMENT

Hardcopy Intensity

Usually this control is called Intensity 3 and is a Storage Display Unit front-panel control.

a. Connect the 4601 to the Storage Display Unit as illustrated in Fig. 2-1.

b. Erase viewing area of Storage Display Unit.

c. Press the 4601 COPY button.

d. CHECK—Line which appears to sweep across viewing area of Storage Display Unit must not store.

e. ADJUST—Hardcopy intensity (Intensity 3) control on the Storage Display Unit until the check can be met.

PAPER CASSETTE LOADING INSTRUCTIONS

1. With power on, pull processor out by means of the latch knobs (1) until it locks fully extended from front of 4601.
2. Depress both cassette cover latches (2) and remove cassette cover. Swing processor top up (3) .
3. Lift paper guide (4) and remove empty cassette.
4. Remove foil tape from new cassette and set into place with arrows up and pointing toward front of processor. Pull out approximately 10" paper.
5. Lower paper guide (4) and rotate cassette forward until paper guide locks into both sides of slot on cassette. Replace cassette cover.
6. Fold back about 4 inches of paper forming a square end. Crease sharply, then insert between drive rollers (5) . Align paper between guide marks A and B.
7. Depress COPY switch on front panel and discard cutoff end of paper.
8. Close processor top (3) and close processor. Press in latch knobs (1) fully.
9. Depress COPY switch and discard first copy. The 4601 is now ready to operate.

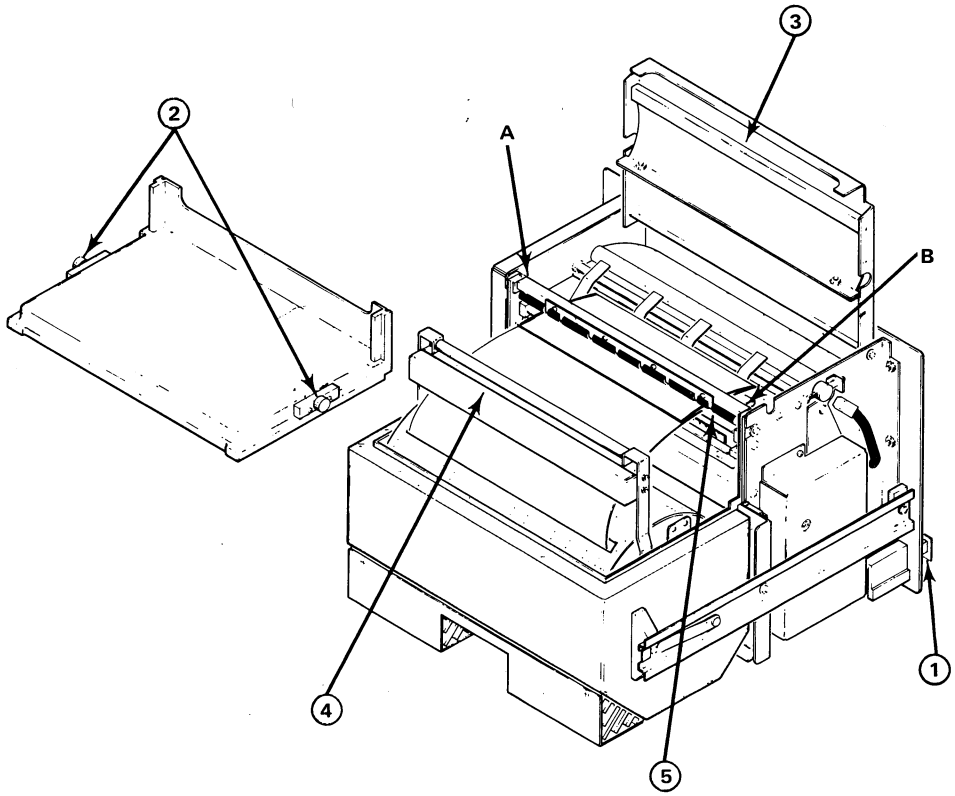

Fig. 2-3. Processor paper cassette loading instructions.

SECTION 3
CIRCUIT DESCRIPTION

Change information, if any, affecting this section will be found at the rear of the manual.

Introduction

This section contains a description of the 4601 Hardcopy Unit circuitry. Each circuit is described in detail using the complete block diagram (located in the diagram section) and waveform illustrations (located in Section 3 where required) to show the relationship between the various circuits. Complete schematics of each circuit are also located in the diagram section. Refer to these diagrams and illustrations throughout the following circuit description for electrical values and relationships.

POWER SUPPLY

General

Power for the processor drive motor B308, processor fan B309, and processor heater HR309 is applied through fuse F300, POWER ON switch S300, and connector J308 pins 14 and 15. In addition, processor heater (HR309) power is subject to the action of microswitches S308 and S309 and thermal fuse F308. S308 and S309 are set up to sense heater expansion. When initially turned on, both S308 and S309 are closed, energizing the entire 1200 W heater. When the heater has warmed to operating temperature, S309 opens. Current through S308 continues until it, too, is opened by expansion of the heater. The correct processor operating temperature is maintained by the 300 W section of HR309 controlled by the thermostatic action of S308. F308 is a special thermal fuse which is heat sensitive and will open if processor temperature exceeds a safe value (333°F). Bottom Rear

Power for the thermoelectric cooler transformer, T305, is connected through fuse F300, fuse F303 connector J308 pin 10, switch S307 (closed except when the instrument is making a copy), connector J308 pin 12, switch S304 (closed whenever processor unit is pushed all the way in the 4601, open otherwise); the Voltage Range Selector, switch S302; thermal cutout S301. Fan B305 runs whenever the cooler transformer, T305, is energized. Bottom, Rear

The thermoelectric cooler system is used to keep the paper supply cool and thereby extend its life. The cooler is not switched by the POWER ON switch but operates whenever the processor is installed (S304 closed) and the 4601 is plugged in. The thermoelectric coolers are mounted on the back of the paper storage unit and serve as a heat exchanger, transferring heat to a finned aluminum heat sink. Fan B305 blows air over the heatsink to remove the heat. The thermoelectric coolers (TC305, TC306) are driven by the full-wave rectified voltage from the secondary winding of T305, connected through pins 2 and 4 of connector J308. C306 filters the rectified output of CR305 and CR306. S305 is a thermal cutout used to turn off the coolers (TC305, TC306) when they rise above a safe temperature on their hot side, above which cooling efficiency is lost and destruction of the cooler results. TC305/TC306 normally use about 7 amperes at 7 volts DC.

The low voltage power supply circuits supply the power for the 4601 from four regulated supplies and two unregulated supplies. Each regulated supply is current limited to prevent damage.

Power for the electronics is applied to the primary winding of T311 through fuse F300, the POWER ON switch S300, fuse F301, Voltage Range Selector switch S302, and thermal cutout S301.

The primary winding of the power transformer, T311, has taps above and below the 115 V nominal point. The Voltage Range Selector switch taps allow the instrument to regulate correctly on lower or higher than, or normal, line voltages. As the Voltage Range Selector switch is switched from LO to M to HI, more turns are connected to the primary winding, thus reducing the turns ratio. This serves to maintain the secondary voltage at a nearly constant value.

+15 Volt

The +15 V supply provides the reference voltage for the other regulated supplies. The output from the 15 V secondary of T311 is rectified by bridge rectifier CR334. The unregulated voltage across filter capacitor C334 is applied to the +15 V Series Regulator stage.

The +15 V Series regulator is comprised of Q334, a series "pass" transistor; U340, an operational amplifier (the comparator and error amplifier); Q336, the current amplifier; VR338, the current-limiting diode; and VR341, the reference zener diode.

The −input of U340 is connected through R340 and VR341 to the +15 V output. R341 sets the correct quiescent current for VR341. The +input of U340 is connected to the arm of R344, which with R343 and R345 form a voltage divider to ground for the +15 V output. The +15 V

is connected through two dividers to the inputs of U340, so that any change in the output voltage will be applied to both inputs. The change applied to the +input is attenuated by the resistive divider, but the voltage applied to the −input is applied at a 1:1 ratio via the zener diode, VR341; therefore, changes in the +15 V output are primarily effective at the −input. The +15 V is adjusted by changing the position of the arm of R344 to change the voltage level at the +input of the operational amplifier.

If the +15 V output rises, the change has the greater effect at the − input of U340, whose output then swings negative. This negative change is applied to the base of Q336 and via emitter follower action of Q336, to the base of Q334, the series "pass" transistor. The negative-going signal at Q334 base reduces the conduction of Q334 and also decreases the output current to the load. This returns the +15 V output to the correct voltage.

Diode VR338 is normally back-biased below its zener voltage of 5.1 V. If the load on the +15 V supply is increased above ≅1 A the increased voltage across R334 will turn on VR338, which shunts the drive to Q336. With the drive to Q336 shunted by VR338, the output current of the +15 V supply cannot increase beyond about ≅1 A.

The unregulated side of the regulated +15 V supply is used for the multiplex relay and the solenoid drive.

−15 V Supply

The −15 V supply is referenced to the +15 V supply and consists of Q364, the comparator; Q348, the error amplifier; Q350, a current amplifier; and Q352, the series "pass" transistor. VR347 serves as the current limiting diode.

The base of Q364B is connected to the junction of R362 and R363, a voltage divider from +15 V to −15 V. Since R362 and R363 are of equal values between opposite voltages, the junction voltage will be zero volts. Q364A base is tied to ground through R356. If the −15 V attempts to go more negative, the voltage at Q364B base (R362, R363 junction) will go more negative, turning on Q364B harder. This reduces conduction in Q348 and in Q350, the current amplifier, which in turn reduces the current output of Q352, the "pass" transistor. The current reduction returns the −15 V to its correct level.

The current limiting diode, VR347, operates in similar fashion to the diode in the +15 V supply.

−40 V Supply

The output of the −40 V bridge rectifier, CR365, is filtered by C365 and then applied to the −40 V regulator. The −40 V regulator consists of Q390, the comparator; Q392, the error amplifier; VR392, a level-shifting diode; Q396, a current amplifier; and Q398, the series "pass" transistor. VR397 is the current limiting element.

Q390B base is tied to the junction of R394 and R395. Q390A base is connected to ground via R388. The regulator circuit seeks a quiescent condition with equal voltages at the comparator (Q390) bases. This establishes the output voltage at the collector of Q398 of −40 V.

The current-limiting feature of the −40 V supply operates just like the +15 V current limiting circuit.

+100 V Supply

The +100 V supply is fed by the output of bridge rectifier CR314, and consists of Q328, the error sensing transistor; Q323, the error amplifier; Q316, a constant-current transistor; VR315, which sets the current in Q316; and Q320, the series "pass" transistor. VR321 is the current limiting element.

Q328B base is tied to the junction of R331 and R332 through R330. Q328A base is tied to +15 V through R326. The regulator circuit seeks a quiescent operating condition of equal voltages at the comparator (Q328) bases. Since Q328A base is tied to +15 V, when the circuit is operating, there will be +15 V at Q328B base and +100 V at the circuit output.

The current-limiting circuit of the +100 V supply operates just like the +15 V current limiter.

A +350 V unregulated supply is provided from the output of bridge rectifier CR311 through the pi-filter C311A, R311, and C311B.

CRT CIRCUIT

General

The CRT circuit provides the voltages necessary for operation of the cathode-ray tube (CRT). Intensity and Focus controls are provided to adjust the CRT for proper display.

The CRT circuit consists of the CRT and its regulated high-voltage supply.

High Voltage Oscillator

The High-Voltage (H.V.) oscillator consists of Q602 and its associated circuitry. The primary winding (pins 1 and 2) of T605 and the reflected capacitance of the secondaries comprise the tuned collector tank circuit; pins 3 and 4 connect to the winding which supplies feedback to the base of Q602, the oscillator transistor. The oscillator runs at about 24 kHz.

When the instrument is turned on, Q372 is turned on by the positive voltage on the H.V. control, R366. Q372 turns on Q375 and Q378, which supplies base drive to Q602. Q602 collector swings negative, inducing a positive voltage at the base terminal (pin 4) of the feedback winding. This turns on Q602 harder and the action continues until the rate of collector current increase in Q602 is less than that required to maintain the voltage across the collector winding. Then the collector voltage goes positive and the base goes negative, turning Q602 off. The cycle repeats at a 24 kHz rate.

H.V. Rectifiers

The high voltage generated by the oscillator is induced in secondary windings, pins 11 and 7, which supply the CRT cathode; pins 6 and 10, which supply the focus voltage; pins 9 and 5, which supply the CRT anode; pins 8 and 12, which supply the CRT grid; and pins 13 and 14, which drive the CRT filament.

H.V. Regulator

The +15 volt supply is reference for the H.V. regulator circuit.

The −3500 V from the cathode is applied through six 3.32 MΩ resistors (R643 through R648) to the summing junction of the regulator amplifier. The other input to the summing junction is applied from the arm of R336 (H.V. adj.) through R368. If the H.V. output increases (goes more negative) the gate voltage of Q372 goes negative, driving the drain positive and reducing the current through Q375/Q378. The reduced base drive to the oscillator, Q602, produces a small collector current and brings the output H.V. back to its original level.

Intensity Control

Q384, R382, and their associated circuitry set the reference DC level for the cathode H.V. supply. This establishes a nominal value of beam current. If the arm of R382 is moved more negative, the negative change is coupled through Q384 and R385 to the low voltage end of the cathode supply. The negative change is corrected by the H.V. regulator with an equal positive change to maintain the cathode at its original level of −3500 V. The H.V. regulators corrective positive change is then applied through the grid winding and rectifier to drive the grid positive, increasing beam current.

TIMING CIRCUITS

The timing circuits are located on the timing board. The circuits are: fast ramp; interrogation pulse blanking; interrogation pulse generator; slow ramp; relay drive; internal blanking (for the READ AMPLIFIER); copy gate; and solenoid drive. Fig. 3-1 illustrates the output waveform relationships of the different timing circuits.

Fast Ramp

The fast ramp is generated by U225, U230 and their associated circuitry, which are connected as an integrator. U230 operates to maintain its −input voltage equal to its +input voltage. This action establishes a constant voltage across R222, and R222's resulting constant current is fed into C225 to create a linear voltage rise on C225. When the voltage at pin 6 of U230 reaches +3.74 V, U225B turns on, which triggers the Schmitt trigger U225C/U225E. A positive pulse of about −6.5 V rising to about +1.2 V DC is generated and applied to the anode of CR227. This pulse turns on CR227 and U225D and C225 discharges through U225D. When the ramp drops, U225B turns off, allowing C248 to charge through R244 and R248 until the Schmitt trigger changes state. This returns the anode voltage of CR227 to about −5.5 V DC and holds it (CR227) and U225A off. The fast ramp starts to run up again. R221 controls the capacitor (C225) charging current, and is used to adjust the slope and rate of repetition. The fast ramp is set for a period of about 6 ms.

Blanking (SN B020000–up)

Blanking pulses are used to turn off the interrogation pulse generator and the read amplifier during fast ramp flyback.

Blanking pulses are generated by feeding the fast ramp to U225A through R232/C232. U225A is turned on when the fast ramp reaches about +3.40 V. U225A sends a negative 15 V pulse through C239. The trailing edge of the negative 15 V pulse pulls up the base of U145C to +0.8 V and turns U145C on for 0.4 millisecond. A negative 10 V pulse appears at U145C collector. This is the blanking pulse.

Blanking (SN B010100–B019999)

Blanking pulses are used to turn off the interrogation pulse generator and the read amplifier during fast ramp flyback.

Blanking pulses are generated by feeding the fast ramp to U225A through R232/C232. U225A is turned on when the fast ramp reaches about +3.40 V. U225A sends a negative 15 V pulse through C239. The trailing edge of the negative 15 V pulse pulls up the base of U144D to +0.8 V and turns U144D on for 0.4 millisecond. A negative 10 V pulse appears at U144D collector. This is the blanking pulse.

Interrogation Pulse Generator

The interrogation pulses are generated by U114A, U114B, U114C, U114D and their associated circuitry. U114A/U114B form an astable multivibrator. The rate of the multivibrator is controlled by R193, and is nominally set for a period of ≅ 6 μs. When the blanking pulse is at its low level, the base of U114A is held to about −2 V, stopping the multivibrator. The output from the collector of U114B is fed through C202 to R203, the width control, and to U114C, a switching transistor. The output of U114C is clamped to the level set by R210, the height control. The interrogation pulse is nominally set to a level of about +1.3 V at the output of R216. U114D is an emitter follower to give low output impedance.

Slow Ramp (SN B020000—up)

The slow ramp is generated by U15, U50, U54, Q40, Q46, and their associated circuitry. Q40, Q46, and U50 are connected as an integrator; U15C, U15E, U15A/U15B, and U54C are the gating circuitry for the integrator U15A/U15B, the gating multivibrator, is normally held with U15A on the U15B off because of the low (≅−0.5 V) voltage at the junction of R25 and CR18 cathode. R25 is conducting through CR18 to the collector of U15C. U15C is held "on" by its base being returned to +15 V through R13 and R14. To start the slow ramp, the front-panel COPY switch is closed, sending a negative pulse through C12/R14 (a remote copy command must send a negative pulse through R16) to the base of U15C. This turns U15C off long enough to turn on U15B. When U15B turns on, it turns off Q40 and starts charging C42 with the constant current from R46. U50 keeps a constant current through R46 by trying to keep both inputs at the same voltage. The constant current charges C42 at a constant rate. When pin 6 of U50 reaches +10 V, U54C turns on, which turns off U15E. The slow ramp runs for about 9 s. U15E collector sends a +15 V pulse to the base of U15A. This turns on U15A and turns off U15B. U15B collector going positive turns on Q40 which discharges C42 thereby ending the slow ramp. The circuit then waits for the next copy.

The slow ramp is fed to U132 and its circuitry to give a variable level and variable amplitude ramp output. The slow ramp is applied through R120/R122 to the +input of U132. Also applied to U132 +input is a DC voltage, through R123, which is selected by S128 and adjusted by R125. The voltage set by R125 is chosen to place the center of the ramp at 0 volts, in center position of S128. S138 is connected to a 5:1 voltage divider to given either a 5 V or 1 V ramp out.

Slow Ramp (SN B010100—B019999)

The slow ramp is generated by U25, U144C, U50, Q46, Q15 and their associated circuitry. U25C, Q46, and U50 are connected as an integrator; U54C, U144C and U25A/U25B plus Q15 are the gating circuitry for the integrator. U25A/U25B, the gating multivibrator, is normally held with U25A on and U25B off because of the low (≅ −0.5 V) voltage at the junction of R25 and CR18 cathode. R25 is conducting through CR18 to the collector of Q15. Q15 is held "on" by its base being returned to +15 V through R13 and R14. To start the slow ramp, the front-panel COPY switch is closed, sending a negative pulse through C12/R14 (a remote copy command must send a negative pulse through R16) to the base of Q15. This turns Q15 off long enough to turn on U25B. When U25B turns on, it turns off U25C and starts charging C42 with the constant current from R46. U50 keeps a constant current through R46 by trying to keep both inputs at the same voltage. The constant current charges C42 at a constant rate. When pin 6 of U50 reaches +10 V, U54C turns on, which turns off U144C. The slow ramp runs for about 9 s. U144C collector sends a +15 V pulse to the base of U25A through R34. This turns on U25A and turns off U25B. U25B collector going positive turns on U25C which discharges C42 thereby ending the slow ramp. The circuit then waits for the next copy.

The slow ramp is fed to U132 and its circuitry to give a variable level and variable amplitude ramp output. The slow ramp is applied through R120/R122 to the + input of U132. Also applied to U132 +input is a DC voltage, through R123, which is selected by S128 and adjusted by R125. The voltage set by R125 is chosen to place the center of the ramp at 0 volts, in center position of S128. S138 is connected to a 5:1 voltage divider to give either a 5 V or 1 V ramp out.

Fast Ramp Output

U282, with its associated parts, provides an output ramp of either 1 volt or 5 volts peak to peak, with the ramp level adjustable for either the top, center, or bottom to be at zero volts DC. The circuit operates just like the slow ramp output circuit described above.

Input Multiplex Relay Drive (SN B020000—up)

The input multiplex relay is energized to control the switches for X, Y, Z, ERASE, and wall band level lines.

U54B is a comparator whose emitter is tied to the cathode of CR74. CR74 anode is grounded so the cathode is at about −0.6 volt since the diode CR74 is conducting through R75/CR75. U54B base is tied to the output of a voltage divider (R70/R71) whose values are chosen so that when the slow ramp is at about +0.7 volt, the output from the R70/R71 divider will turn on U54B. The resulting signal is called $\overline{T1}$. When U54B turns on, its collector swings negative to 0.6 volt. The collector voltage of U54B is applied through R80 to the base of U54E, turning off U54E, whose collector swings up to +15 volts. This signal is called T1 since it is $\overline{T1}$ inverted.

U54A is another comparator that operates like U54B, but is set by voltage divider R60/R61 to turn on at $\overline{T2}$, which is the time when the slow ramp reaches about +8.7 volts. Signal $\overline{T2}$ is applied through R90 to U15D, an ampli-

fier used to steepen the switching slope of $\overline{T2}$. U54D then inverts the output of U15D to restore the proper polarity. The U54D output is called "$\overline{T2}$".

T1 and "$\overline{T2}$" are applied to an AND gate comprised of CR95, CR98 and R100. Only when both input signals (T1 and "$\overline{T2}$") are positive (this will be the time between the +0.7 V and +8.7 levels of the slow ramp) will the AND gate have a positive output which can supply drive current for relay driver transistor Q102. Refer to Fig. 3-1 for waveform time relationships.

When Q102 turns on, the input multiplex relay is energized and switches the input and output lines from the display source and storage display unit that require switching.

Input Multiplex Relay Drive (SN B010100–B019999)

The input multiplex relay is energized to control the switches for X, Y, Z, ERASE, and wall band level lines.

U54A is a comparator whose emitter is tied to the cathode of CR74. CR74 anode is grounded so the cathode is at about −0.6 volt since the diode CR74 is conducting through R75/CR75. U54A base is tied to the output of a voltage divider (R60/R61) whose values are chosen so that when the slow ramp is at about +0.7 volt, the output from the R60/R61 divider will turn on U54A. The resulting signal is called $\overline{T1}$. When U54A turns on, its collector swings negative to 0.6 volt. The collector voltage U54A is applied through R90 to the base of U25E, turning off U25E, whose collector swings up to +15 volts. This signal is called T1 since it is $\overline{T1}$ inverted.

U54B is another comparator that operates like U54A, but is set by voltage divider R70/R71 to turn on at $\overline{T2}$, which is the time when the slow ramp reaches about +8.7 volts. Signal $\overline{T2}$ is applied through R80 to U54E, an amplifier used to steepen the switching slope of $\overline{T2}$. U54D then inverts the output of U54E to restore the proper polarity. The U54D output is called "$\overline{T2}$".

T1 and "$\overline{T2}$" are applied to an AND gate comprised of CR95, CR98 and R96. Only when both input signals (T1 and "$\overline{T_2}$") are positive (this will be the time between the +0.7 V and +8.7 V levels of the slow ramp) will the AND gate have a positive output which can supply drive current for relay driver transistor Q102. Refer to Fig. 3-1 for waveform time relationships.

When Q102 turns on, the input multiplex relay is energized and switches the input and output lines from the display source and storage display unit that require switching.

Internal Blanking (for Read Amplifier)

Internal blanking for the read amplifier is generated by U114E with CR94, CR97, CR110 and associated resistors. CR94, CR97 and CR110 form a 3 input AND gate. CR110 is driven by the blanking pulse (+10 V to 0 V) while CR94 and CR97 cathodes are both up only between +0.7 V and +8.7 V of the slow ramp. The resulting output of the AND gate (at the junction of R96 and R110) is a high (about +10.5 V) level with blanking pulses going down to about +0.5 V only during the time between +0.7 V and +8.7 V of the slow ramp. When the slow ramp isn't running up, the diodes CR94/CR97 are on, holding the R96/R110 junction at about ground level. The blanking transistor, U114E is turned off except during slow ramp excursion between +0.7 and +8.7 V, when the transistor U114E inverts the blanking pulses for use by the Read Amplifier.

Copy Gate (SN B020000–up)

The copy gate is provided to inform equipment interconnected with the 4601, when the 4601 is making copy. The copy gate is generated by U145D, CR160, and CR161, along with a one-shot multivibrator consisting of U145A, U145B and their associated circuitry. Diodes CR160 and CR161 form an OR gate, the output of which is held high (about +11 V) during slow ramp runup and for one second after, by the collectors of U15A and U145A. As a result, pin 11 of U145D stays low (about 0 volts) from start of copy until one second following copy end. When the 4601 is ready to make copy, U145D is turned off, and pin 11 is at approximately +5 V. Copy gate is continued for one second after the end of the slow ramp to allow the mechanical parts of the 4601 to get ready to make another copy.

Copy Gate (SN B010100–B019999)

The Copy Gate is provided to let equipment interconnected with the 4601 know when the 4601 is making copy. The copy gate is generated by U25D, CR150 and CR151, with associated resistors. The diodes CR150/CR151 form an OR gate driven by U25A (high ≅ 11 V during the slow ramp) and controlled by a switch on the processor unit called T mechanical. T mech is grounded except during the time between about 0.5 s after slow ramp beginning and about 0.3 s after slow ramp ending, when it is high (about +11 volts). Whenever one or both these inputs are high, U25D is turned on, giving an output of about 0 volts. When both U25A and T mech are low, the output of U25D is high, since U25D is turned off by the voltage divider of R150/R151.

Solenoid Drive (SN B020000–up)

There is a solenoid in the processor that must be actuated to initiate and conclude a mechanical cycle of the

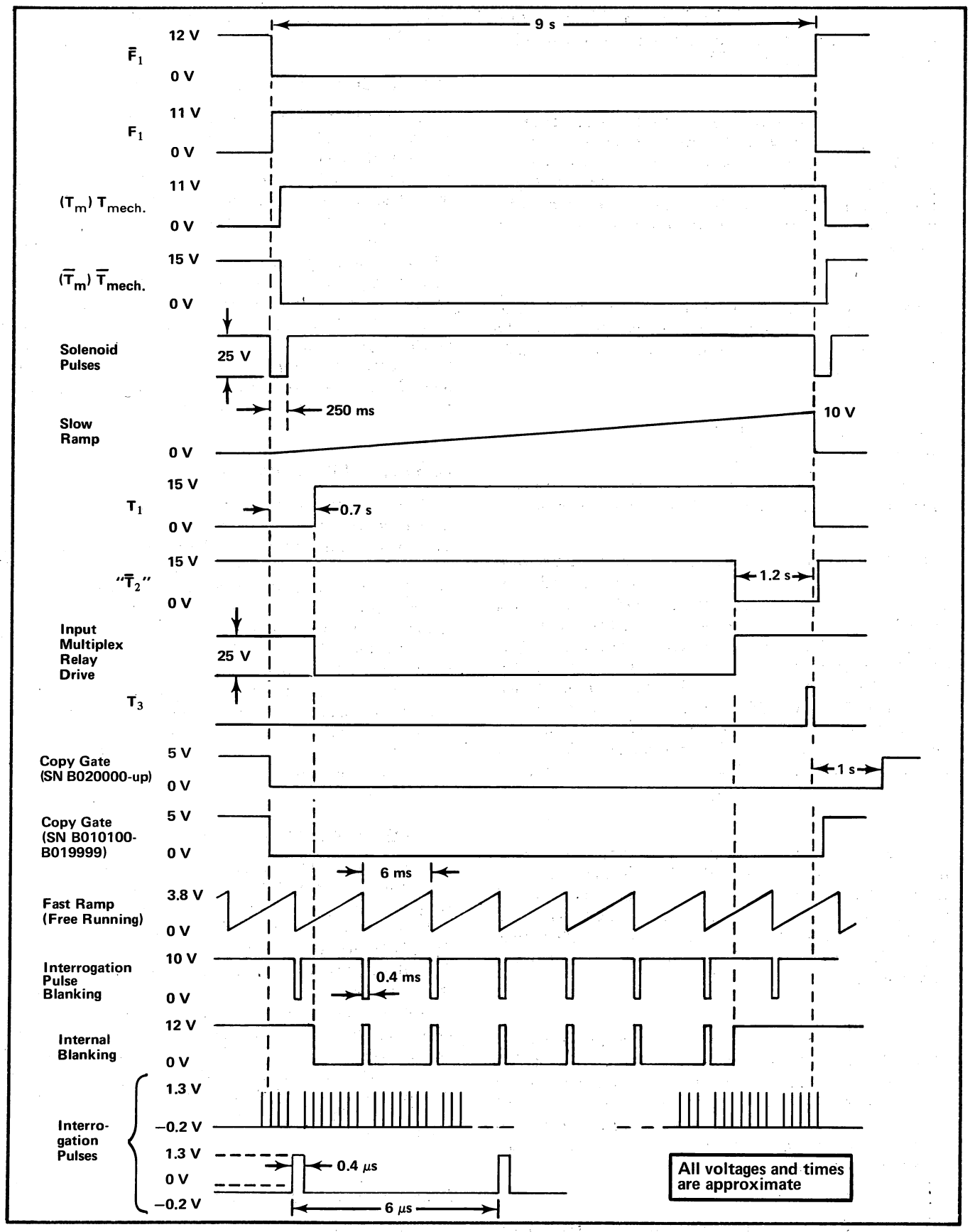

Fig. 3-1. Output waveform relationships of the different timing circuits. Refer to the complete block diagram (located in the diagram section) for additional information.

processor. The solenoid is driven by a current pulse when the slow ramp starts and again by a current pulse when the slow ramp ends.

The solenoid drive circuit is made up of CR173, CR174, CR175, CR712, CR170, CR171, Q175, Q180, Q185 and associated circuitry. CR170/CR171 are driven by U15A (up when slow ramp runs) and $\overline{T}$ mech (up except during the time between about 0.5 s after slow ramp starts and 0.3 s after ramp ends.

Their (CR170/CR171) output of R170/C170 junction is a +11 volt pulse of about 0.5 s at slow ramp start. A similar pulse is formed at R173/C173 junction by CR173/CR174 at the end of the slow ramp. These pulses go to the CR172/CR175 OR gate to drive the base of Q175. Q175/Q180 forms a one-shot multivibrator with Q180 normally on. Q180's collector is down, holding Q185 off and holding the solenoid de-energized.

Whenever a pulse is fed from either CR172 or CR175, Q175 is turned on and the one-shot (Q175/Q180) cycles, producing a positive pulse at Q180 collector which turns on Q185 for about 250 ms to drive the solenoid.

Solenoid Drive (SN B010100–B019999)

There is a solenoid in the processor that must be actuated to initiate and conclude a mechanical cycle of the processor. The solenoid is driven by a current pulse when the slow ramp starts and again by a current pulse when the slow ramp ends.

The solenoid drive circuit is made up of CR163, CR164, CR165, CR162, CR160, CR161, U144A, U144B, Q174 and associated circuitry. CR160/CR161 are driven by U25A (up when slow ramp runs) and $\overline{T}$ mech (up except during the time between about 0.5 s after slow ramp starts and 0.3 s after ramp ends).

Their (CR160/CR161) output of R160/C160 junction is a +11 volt pulse of about 0.5 s at slow ramp start. A similar pulse is formed at R163/C163 junction by CR163/CR164 at the end of the slow ramp. These pulses go to the CR162/CR165 OR gate to drive the base of U144A. U144A/U144B forms a one-shot multivibrator with U144B normally on. U144B's collector is down, holding Q174 off and holding the solenoid de-energized.

Whenever a pulse is fed from either CR162 or CR165, U144A is turned on and the one-shot (U144A/U144B) cycles, producing a positive pulse at U144B collector which turns on Q174 for about 250 ms to drive the solenoid.

DEFLECTION AMPLIFIERS AND DYNAMIC FOCUS

Dynamic Focus

The purpose of the Dynamic Focus circuit is to provide a clearly focused display across the entire width of the 4601 CRT. Dynamic focus is needed because of the change in beam length as the beam traverses the width of the CRT.

The fast ramp is applied through a voltage divider of Q440 which operates as a phase-splitter. The ramps at Q440 collector and at the junction of VR445 and R445 have their DC components removed by C443 and C445. Any voltage at the cathodes of either CR448 or CR449 which goes below about 1.2 V will turn on Q456, whose emitter is referenced to ground. The ramps at the cathodes of CR448 and CR449 are now centered about some voltage as set by R453. Adjusting the voltage at the arm of R453 adjusts the amount of the ramps that are below the turn-on voltage of CR448 and CR449. The output of Q456 is then inverted, amplified version of its base drive, and is applied to the Q464/Q472 amplifier, whose output forms the DC reference for the focus winding in the CRT circuit.

Vertical Amplifier

The vertical amplifier is a single stage, complementary current amplifier that provides current gain for the slow ramp. A DC level adjustment (R482) is provided. Q490 and Q496 are the amplifier transistors.

Horizontal Amplifier

The Horizontal Amplifier provides sufficient gain and linearity correction to provide a clear and accurate horizontal display on the CRT. Linearity correction is used to give equal horizontal amounts of deflection regardless of the position of the scan. Linearity correction is necessary because of the great horizontal deflection angle and the resultant greater trace movement per degree of deflection as the trace approaches the tube edges.

Linearity correction is accomplished by reducing the slopes of the input ramp at the + and – ends of the ramp. The slope is reduced at the + end by conduction of CR402 and CR403 through R404. This forms a voltage divider through R403, R404, and the impedance of CR402 and CR403 (dependent on the level of the ramp).

The reverse of this occurs on the – end of the ramp by conduction of CR404 and CR405. The linearity corrected ramp is then applied to U410, an integrated circuit operational amplifier, and then to a two-stage complementary current amplifier, which drives the horizontal deflection yoke. Feedback from the horizontal yoke is sensed across R429, and applied through R434 to the – input of U410.

DC positioning voltage is also applied to the – input of U410 from R431 through R432. The polarity of output ramp may be reversed by changing S428.

READ AMPLIFIER AND Z-AXIS AMPLIFIER

Read Amplifier (SN B020000–up)

The Read Amplifier is used to translate information from the storage display unit target being scanned into uniform output pulses to drive the 4601 Z Axis Amplifier.

As the slow ramp scans the tube, the fast ramp is scanning at a rate whose period is 6 ms. Every 6 μs an interrogation pulse turns on the Z-axis of the instrument being read out. The interrogation therefore takes place 1000 times per fast ramp and produces, for every interrogation pulse, a pulse at the target whose amplitude depends on whether the target was "written" at the place interrogated. The resulting pulses from the target are coupled to T501. The center tap of the secondary of T501 is set at ground (0 volts), the proper input level for U505. C502, with T505 is used to form a filter dampened by R502.

U505 and U515, differential video amplifiers, (gain ≅ 400 and 10), amplify the pulses. The outputs of U515 are applied directly to the + and – inputs of U525, a differential comparator. The average DC level of the signal pulses applied to pin 3 of U525 is adjusted by R523. R523 is adjusted so that a positive pulse is produced at the output (pin 7) of U525 whenever a written area of the target is interrogated. U535B/U535C are connected to form an RS flip-flop with the signal pulse from U525 applied to the set input (pin 8, U535B) and the interrogation pulse applied to the RESET input, pin 12 of U535C. The signal pulse at the "set" input (pin 8, U535B) lags the interrogation pulse (RESET) by about 0.6 μs. A signal pulse at the "set" input flips the output negative (pin 5, U535B) and also flops the reset output (pin 9, U535C) which holds U535B down at its output after the signal pulse is over. The next interrogation pulse applied to pin 12, U535C, resets the flip-flop. The flip-flop stays in "reset" (pin 5 "up") until such time as another signal pulse "sets" the flip-flop, see Fig. 3-2.

If the flip-flop is "set" at the time the retrace starts, the blanking pulse will "reset" the flip-flop. Output signals from the flip-flop are then fed to U535A, a 3-input NOR gate, together with a ground signal and the internal blanking signal. Output from U535A will be high only when all 3 inputs are low which can only occur when the RS flip-flop U535B/U535C is "set" and the internal blanking signal is low. This period occurs only when the fast ramp is scanning the storage display unit and not yet retracing.

The signal is then fed to Q540 and Q545 which couple the output signal, either 0 volts or +3.6 volts, to the contrast control and Z-axis amplifier.

Read Amplifier (SN B010100–B019999)

The Read Amplifier is used to translate information from the storage display unit target being scanned into uniform output pulses to drive the 4601 Z Axis Amplifier.

As the slow ramp scans the tube, the fast ramp is scanning at a rate whose period is 6 ms. Every 6 μs an interrogation pulse turns on the Z-axis of the instrument being read out. The interrogation therefore takes place 1000 times per fast ramp and produces, for every interrogation pulse, a pulse at the target whose amplitude depends on whether the target was "written" at the place interrogated. The resulting pulses from the target are coupled to J501 and T501. The center tap of the secondary of T501 is set to about +6 volts, the proper input level for U506, by the voltage divider R501/R502. C502 AC grounds the T501 secondary center tap. C504, with T501 is used to form a filter dampened by R504.

U506, a differential video amplifier, (gain ≅400), amplifies the pulses and drives Q516, an amplifier stage (gain ≅16). CR503 and CR504 are protection diodes for U506. R513, R514 and R511 bias Q516 so that its collector is within about one volt of ground. C516/C517 are high-frequency rolloff capacitors; C517 is adjustable to maximize the signal to noise ratio at TP542. Q520 is a Darlington emitter follower used to drive the + input of U548 and Q524. Q524, Q528, Q530 and CR532 are connected to form a high gain operational amplifier. The base of Q524 is the + input and the base of Q528 is the –input. A feedback network composed of CR532 and C532 forms a pulse peak detector.

C532 always stores the most positive peak amplitude attained by a series of interrogation pulses. By charging to the positive peak, C532 holds the base of Q528 at that same level. Any time the base of Q524 is driven more positive than that of Q528 by the arrival of a larger-amplitude interrogation pulse, the collector of Q530 is driven more positive. This turns on CR532 and charges C532 to the new positive level. Any time the collector of Q530 drops below the level at the base of Q528, CR532 cuts off and C532 remains charged to the level set by the largest-amplitude interrogation pulse. Between interrogation pulses C532 discharges slightly through R534 and R535. The DC level produced at Q528 base is summed via R534 with the dynamic focus voltage (through R535) at the base of Q538, an emitter follower used to drive R547, the comparison voltage level control. The output of R547 is applied directly to the – input of U548, a differential comparator whose + input is driven by Q520 (which applies the signal pulses). The average DC level of the signal pulses applied to pin 2 of U548 is adjusted by R543. R543 and R547 are adjusted so that a positive pulse is produced at the output (pin 7) of U548 whenever a written area of the target is interrogated. U552A/U552B are connected to form an RS flip-flop with

the signal pulse from U548 applied to the set input (pin 7, U552A) and the interrogation pulse applied to the RESET input, pin 12 of U552B. The signal pulse at the "set" input (pin 7, U552A) lags the interrogation pulse (RESET) by about 0.6 µs. A signal pulse at the "set" input flips the output negative (pin 5, U552A) and also flops the reset output (pin 9, U552B) which holds U552A down at its output after the signal pulse is over. The next interrogation pulse applied to pin 12, U552B, resets the flip-flop. The flip- flop stays in "reset" (pin 5 "up") until such time as another signal pulse "sets" the flip-flop.

If the flip-flop is "set" at the time the retrace starts, the blanking pulse will "reset" the flip-flop. Output signals from the flip-flop are then fed to U552C, a 3-input NOR gate, together with a ground signal and the internal blanking signal. Output from U552C will be high only when all 3 inputs are low which can only occur when the RS flip-flop U552A/552B is "set" and the internal blanking signal is low. This period occurs only when the fast ramp is scanning the storage display unit and not yet retracing.

The signal is then fed to an emitter follower, Q554 that drives the contrast control and Z-axis amplifier.

Z-Axis Amplifier (SN B020000–up)

The Read Amplifier output is fed to the Z axis amplifier and used to intensity modulate the CRT beam current to give a display on the CRT. The Z axis amplifier consists of Q556, a differential amplifier; Q566, a voltage amplifier; and Q572/Q576, a complementary current amplifier. In the absence of any signal pulses from the read amplifier, the Z axis input rests slightly below ground. This holds the Z output at ground because the collector of Q576 is grounded, and cannot go below 0 volts. The Z output provides the reference voltage for the low voltage end of the CRT grid rectifiers; so when the Z axis output swings positive, the CRT grid supply goes positive by the same amount, pulling the CRT grid up and increasing the CRT beam current. The voltage swing of the Z output is controlled by adjusting the size of the input signal from the read amplifier with the CONTRAST control R551.

Z-Axis Amplifier (SN B010100–B019999)

The Read Amplifier output is fed to the Z axis amplifier and used to intensity modulate the CRT beam current to give a display on the CRT. The Z axis amplifier consists of Q566, a differential amplifier; Q576, a voltage amplifier; and Q582/Q586, a complementary current amplifier. In the absence of any signal pulses from the read amplifier, the Z axis input rests slightly below ground. This holds the Z output at ground because the collector of Q586 is grounded, and cannot go below 0 volts. The Z output provides the reference voltage for the low voltage end of the CRT grid rectifiers; so when the Z axis output swings positive, the CRT grid supply goes positive by the same amount, pulling the CRT grid up and increasing the CRT beam current. The voltage swing of the Z output is controlled by adjusting the size of the input signal from the read amplifier with the CONTRAST control R561.

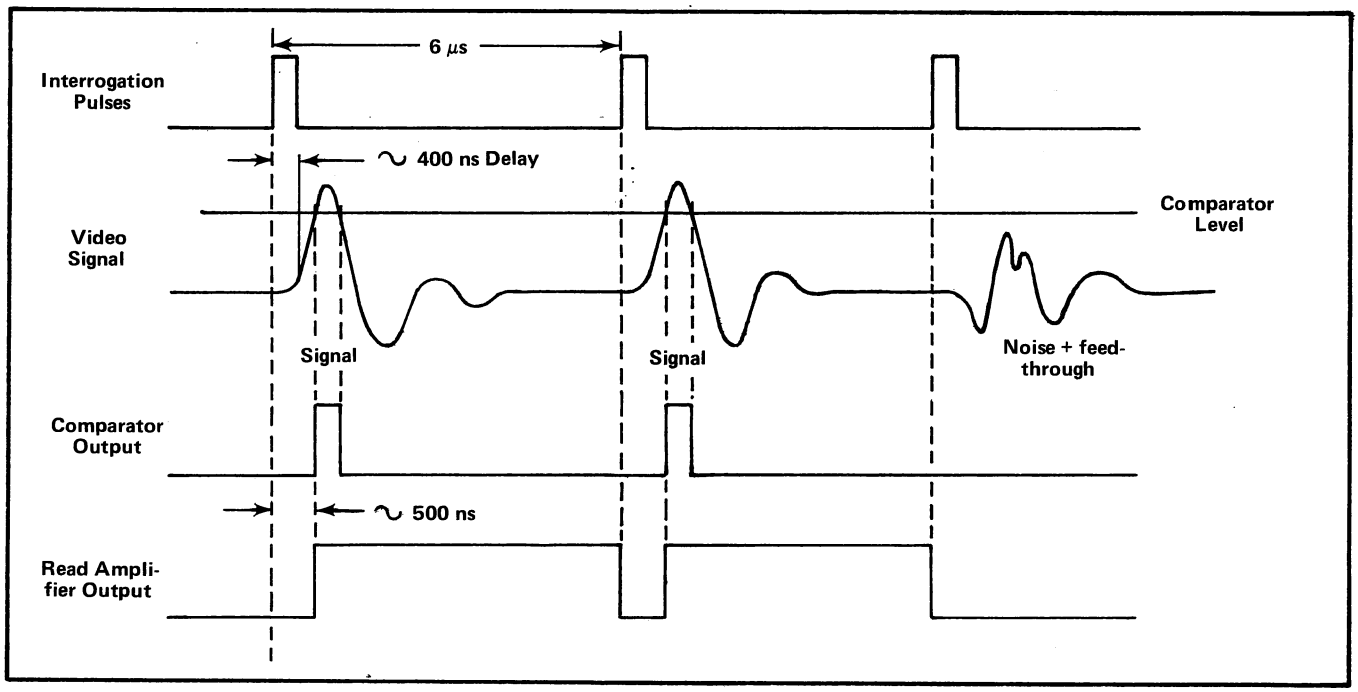

Fig. 3-2. Waveform relationships for the read amplifier.

ELECTRICAL PARTS LIST

Values are fixed unless marked Variable.

Ckt. No.	Tektronix Part No.	Serial/Model No. Eff	Disc	Description			
				CHASSIS			
				Motors			
B305	147-0031-00			Motor, AC	115 V		
B308	147-0032-00			Motor, AC	115 V		
				Capacitors			
Tolerance ±20% unless otherwise indicated.							
C306	290-0321-00			11,000 μF	Elect.	15 V	+100%-10%
C308	285-0907-00			4 μF			
C311A,B	290-0150-00			2 x 10 μF	Elect.	500 V	
C314	290-0018-00			510 μF	Elect.	150 V	
C334	290-0320-00			4500 μF	Elect.	40 V	+100%-10%
C345	290-0278-00			550 μF	Elect.	50 V	
C347	290-0320-00			4500 μF	Elect.	40 V	+100%-10%
C363	290-0278-00			550 μF	Elect.	50 V	
C365	290-0322-00			550 μF	Elect.	100 V	+75%-10%
C602	290-0226-00			20 μF	Elect.	100 V	
				Semiconductor Device, Diodes			
CR305	152-0274-00			Silicon	Replaceable by 1N1200		
CR306	152-0274-00			Silicon	Replaceable by 1N1200		
				Fuses			
F300	159-0038-00			15 A	3AG	Fast-Blo	
F301	159-0034-00			1.6 A	3AG	Slo-Blo	
F303	159-0019-00			1 A	3AG	Slo-Blo	
F308	159-0101-00			Thermal			

CHASSIS (cont)

Ckt. No.	Tektronix Part No.	Serial/Model No. Eff Disc	Description		
			Heaters		
TC305	119-0255-00		Heat exchange unit, cooling		
TC306	119-0255-00		Heat exchange unit, cooling		
HR309	119-0241-00		Heater, paper		
			Connector		
J300	131-0997-00		Receptacle, electrical, male		
			Inductors		
L306	119-0254-00		Solenoid, electrical		
L428A,B	108-0451-00		Yoke, coil assembly		
L601	108-0205-00		1 mH		
			Transistors		
Q334	*151-0140-00		Silicon	NPN	TO-3 Selected from 2N3055
Q352	*151-0140-00		Silicon	NPN	TO-3 Selected from 2N3055
Q398	*151-0140-00		Silicon	NPN	TO-3 Selected from 2N3055
Q426	151-0226-00		Silicon	NPN	TO-66 2N3767
Q428	151-0227-00		Silicon	PNP	TO-66 2N3741
Q602	151-0218-00		Silicon	NPN	TO-3 2N4348
			Resistors		
Resistors are fixed, composition, ±10% unless otherwise indicated.					
R311	301-0103-00		10 kΩ	1/2 W	5%
R312	301-0474-00		470 kΩ	1/2 W	5%
R561	311-0091-00		1 kΩ, Var		
R562	301-0181-00		180 Ω	1/2 W	5%
R626	311-0505-01		10 MΩ, Var		
			Switches		
	Wired or Unwired				
S300	260-1198-00		Toggle		
S301	260-0413-00		Thermo cutout 175°F ±5°F		
S302[1]					
S304	260-1107-00		Push		
S305	260-0677-00		Thermo cutout open 158° close 128°		

[1] See Mechanical Parts List (Line Voltage Selector).

CHASSIS (cont)

Ckt. No.	Tektronix Part No.	Serial/Model No. Eff	Disc	Description
				Switches (cont)
S306	260-0574-00			Push
S307	260-0976-00			Sensitive Dual
S308	260-1181-00			Sensitive
S309	260-1180-00			Sensitive
				Transformers
T305	*120-0679-00			Thermo electric cooling
T311	*120-0678-00			LV Power
T605	*120-0680-00			HV Power
				Electron Tube
V660	*154-0629-00			T6110-203 CRT Standard Phosphor

Ckt. No.	Tektronix Part No.	Serial/Model No. Eff	Disc	Description			
		A1 POWER SUP & HV REG Circuit Card Assembly					
	*670-0373-00			Complete Card			
				Capacitors			
Tolerance ±20% unless otherwise indicated.							
C325	283-0110-00			0.005 µF	Cer	150 V	
C338	283-0178-00			0.1 µF	Cer	100 V	+80%-20%
C347	283-0003-00			0.01 µF	Cer	150 V	
C369	283-0088-00			1100 pF	Cer	500 V	5%
C371	283-0010-00			0.05 µF	Cer	50 V	
C382	283-0000-00			0.001 µF	Cer	500 V	
C385	290-0285-00			4 µF	Elect.	200 V	+50%-10%
C387	290-0149-00			5 µF	Elect.	150 V	
C395	283-0134-00			0.47 µF	Cer	50 V	+80%-20%
C397	283-0003-00			0.01 µF	Cer	150 V	
				Semiconductor Device, Diodes			
CR311A,B,C,D	*152-0107-00			Silicon	Replaceable by 1N647		
CR314A,B,C,D	*152-0107-00			Silicon	Replaceable by 1N647		
CR320	*152-0061-00			Silicon	Tek Spec		
CR326	*152-0185-00			Silicon	Replaceable by 1N4152		
CR330	*152-0061-00			Silicon	Tek Spec		
CR334	152-0199-00			Rectifier bridge	MDA 962-3		
CR347	152-0199-00			Rectifier bridge	MDA 962-3		
CR365	152-0199-00			Rectifier bridge	MDA 962-3		
CR369	*152-0185-00			Silicon	Replaceable by 1N4152		
CR370	*152-0185-00			Silicon	Replaceable by 1N4152		
CR382	*152-0061-00			Silicon	Tek Spec		
VR315	152-0280-00			Zener	1N753A	400 mW, 6.2 V, 5%	
VR318	152-0283-00			Zener	1N976B	400 mW, 4.3 V, 5%	
VR321	152-0279-00			Zener	1N751A	400 mW, 5.1 V, 5%	
VR338	152-0279-00			Zener	1N751A	400 mW, 5.1 V, 5%	
VR341	152-0212-00			Zener	1N936	500 mW, 9 V, 5%	
VR347	152-0279-00			Zener	1N751A	400 mW, 5.1 V, 5%	
VR375	152-0127-00			Zener	1N755A	400 mW, 7.5 V, 5%	
VR378	152-0241-00			Silicon	1N973B	400 mW, 35 V, 5%	
VR392	152-0241-00			Silicon	1N973B	400 mW, 35 V, 5%	
VR397	152-0278-00			Silicon	1N4372A	400 mW, 3 V, 5%	

A1 POWER SUP & HV REG Circuit Card Assembly (cont)

Ckt. No.	Tektronix Part No.	Serial/Model No. Eff	Disc	Description		
				Transistors		
Q316	151-0188-00			Silicon	PNP	TO-92 2N3906
Q320	*151-0150-00			Silicon	NPN	TO-5 Selected from 2N3440
Q323	*151-0150-00			Silicon	NPN	TO-5 Selected from 2N3440
Q328	*151-0261-00			Silicon	NPN	TO-78 Dual, Tek Spec
Q336	*151-0136-00			Silicon	NPN	TO-5 Replaceable by 2N3053
Q348	*151-0134-00			Silicon	PNP	TO-5 Replaceable by 2N3905
Q350	*151-0136-00			Silicon	NPN	TO-5 Replaceable by 2N3053
Q364	*151-0261-00			Silicon	PNP	TO-78 Dual, Tek Spec
Q372	151-1005-00			Silicon	FET	N channel, junction type
Q375	151-0188-00			Silicon	PNP	TO-92 2N3906
Q378	*151-0150-00			Silicon	NPN	TO-5 Selected from 2N3440
Q384	*151-0150-00			Silicon	NPN	TO-5 Selected from 2N3440
Q390	151-0232-00			Silicon	NPN	TO-77 Dual
Q392	151-0208-00			Silicon	PNP	TO-5 2N4036
Q396	*151-0150-00			Silicon	NPN	TO-5 Selected from 2N3440

Resistors

Resistors are fixed, composition, ±10% unless otherwise indicated.

R315	303-0223-00	22 kΩ	1 W		5%
R317	315-0301-00	300 Ω	1/4 W		5%
R318	315-0272-00	2.7 kΩ	1/4 W		5%
R320	315-0151-00	150 Ω	1/4 W		5%
R321	315-0102-00	1 kΩ	1/4 W		5%
R323	315-0272-00	2.7 kΩ	1/4 W		5%
R325	315-0822-00	8.2 kΩ	1/4 W		5%
R326	315-0103-00	10 kΩ	1/4 W		5%
R327	315-0473-00	47 kΩ	1/4 W		5%
R330	315-0102-00	1 kΩ	1/4 W		5%
R331	321-0367-00	64.9 kΩ	1/8 W	Prec	1%
R332	321-0295-00	11.5 kΩ	1/8 W	Prec	1%
R334	308-0441-00	3 Ω	3 W	WW	5%
R336	315-0220-00	22 Ω	1/4 W		5%
R338	315-0101-00	100 Ω	1/4 W		5%

A1 POWER SUP & HV REG Circuit Card Assembly (cont)

Ckt. No.	Tektronix Part No.	Serial/Model No. Eff	Disc	Description			
				Resistors (cont)			
R340	315-0182-00			1.8 kΩ	1/4 W		5%
R341	321-0185-00			825 Ω	1/8 W	Prec	1%
R343	321-0231-00			2.49 kΩ	1/8 W	Prec	1%
R344	311-0409-00			1 kΩ, Var			
R345	321-0251-00			4.02 kΩ	1/8 W	Prec	1%
R347	315-0103-00			10 kΩ	1/4 W		5%
R350	315-0220-00			22 Ω	1/4 W		5%
R352	308-0441-00			3 Ω	3 W	WW	5%
R354	315-0102-00			1 kΩ	1/4 W		5%
R356	315-0752-00			7.5 kΩ	1/4 W		5%
R358	315-0152-00			1.5 kΩ	1/4 W		5%
R360	315-0152-00			1.5 kΩ	1/4 W		5%
R362	321-0306-00			15 kΩ	1/8 W	Prec	1%
R363	321-0306-00			15 kΩ	1/8 W	Prec	1%
R366	311-0902-00			5 kΩ, Var			
R367	321-0306-00			15 kΩ	1/8 W	Prec	1%
R368	321-0377-00			82.5 kΩ	1/8 W	Prec	1%
R369	315-0104-00			100 kΩ	1/4 W		5%
R370	315-0105-00			1 MΩ	1/4 W		5%
R371	315-0103-00			10 kΩ	1/4 W		5%
R372	315-0472-00			4.7 kΩ	1/4 W		5%
R373	315-0102-00			1 kΩ	1/4 W		5%
R375	315-0103-00			10 kΩ	1/4 W		5%
R376	315-0332-00			3.3 kΩ	1/4 W		5%
R378	315-0102-00			1 kΩ	1/4 W		5%
R380	307-0106-00			4.7 Ω	1/4 W		5%
R382	311-0905-00			100 kΩ, Var			
R383	315-0101-00			100 Ω	1/4 W		5%
R384	315-0473-00			47 kΩ	1/4 W		5%
R385	315-0102-00			1 kΩ	1/4 W		5%
R387	315-0223-00			22 kΩ	1/4 W		5%
R388	315-0123-00			12 kΩ	1/4 W		5%
R390	315-0222-00			2.2 kΩ	1/4 W		5%
R392	315-0122-00			1.2 kΩ	1/4 W		5%
R393	315-0222-00			2.2 kΩ	1/4 W		5%
R394	321-0306-00			15 kΩ	1/8 W	Prec	1%
R395	321-0347-00			40.2 kΩ	1/8 W	Prec	1%
R397	315-0681-00			680 Ω	1/4 W		5%
R398	308-0240-00			2 Ω	3 W	WW	5%
				Integrated Circuit			
U340	156-0049-00			Op ampl	Replaceable by Fairchild μA741C		

Ckt. No.	Tektronix Part No.	Serial/Model No. Eff	Disc	Description			
				A2 HV 2 Circuit Board Assembly			
	*670-0378-00			Complete Board			
				Capacitors			
Tolerance ±20% unless otherwise indicated.							
C611	283-0043-00			0.0068 μF	Cer	3000 V	
C612	283-0101-00			4700 pF	Cer	6000 V	+80%-20%
C613	283-0101-00			4700 pF	Cer	6000 V	+80%-20%
C620	283-0105-00	XB020000		0.01 μF	Cer	2000 V	+80%-20%
C621	283-0105-00			0.01 μF	Cer	2000 V	+80%-20%
				Semiconductor Device, Diodes			
CR610	152-0429-00			Silicon	Low-leakage current, 5000 V		
CR611	152-0429-00			Silicon	Low-leakage current, 5000 V		
CR620	152-0429-00	XB020000		Silicon	Low-leakage current, 5000 V		
				Resistors			
Resistors are fixed, composition, ±10% unless otherwise indicated.							
R612	301-0225-00			2.2 MΩ	1/2 W		5%
R614	325-0094-00			100 MΩ	1 1/2 W	Film	5%
R621	301-0105-00			1 MΩ	1/2 W		5%
R622	301-0395-00			3.9 MΩ	1/2 W		5%
R624	303-0475-00			4.7 MΩ	1 W		5%
R625	303-0475-00			4.7 MΩ	1 W		5%

Ckt. No.	Tektronix Part No.	Serial/Model No. Eff	Disc	Description			
				A3 HV 1 Circuit Board Assembly			
	*670-0377-00			Complete Board			
				Capacitors			
Tolerance ±20% unless otherwise indicated.							
C620	283-0105-00	B010100	B019999X	0.01 μF	Cer	2000 V	+80%-20%
C630	283-0071-00			0.0068 μF	Cer	5000 V	
C632	283-0082-00			0.01 μF	Cer	4000 V	+80%-20%
C636	283-0088-00			1100 pF	Cer	500 V	5%
C637	283-0082-00			0.01 μF	Cer	4000 V	+80%-20%
C640	283-0071-00			0.0068 μF	Cer	5000 V	
C641	283-0071-00			0.0068 μF	Cer	5000 V	
C642	283-0082-00			0.01 μF	Cer	4000 V	+80%-20%
C643	283-0082-00			0.01 μF	Cer	4000 V	+80%-20%
C647	283-0082-00			0.01 μF	Cer	4000 V	+80%-20%
C648	283-0082-00			0.01 μF	Cer	4000 V	+80%-20%
				Semiconductor Device, Diodes			
CR620	152-0429-00	B010100	B019999X	Silicon	Low-leakage current, 5000 V		
CR630	152-0408-00			Silicon	Rectifier, high voltage, 10,000 V		
CR640	152-0408-00			Silicon	Rectifier, high voltage, 10,000 V		
				Bulbs			
DS645	150-0030-00			Neon, NE 2 V			
DS646	150-0030-00			Neon, NE 2 V			
DS647	150-0030-00			Neon, NE 2 V			
				Resistors			
Resistors are fixed, composition, ±10% unless otherwise indicated.							
R630	301-0333-00			33 kΩ	1/2 W		5%
R632	325-0094-00			100 MΩ	1 1/2 W	Film	5%
R633	301-0333-00			33 kΩ	1/2 W		5%
R634	301-0335-00			3.3 MΩ	1/2 W		5%
R636	315-0223-00			22 kΩ	1/4 W		5%

A3 HV 1 Circuit Board Assembly (cont)

Ckt. No.	Tektronix Part No.	Serial/Model No. Eff	Disc	Description			
				Resistors (cont)			
R641	301-0223-00			22 kΩ	1/2 W		5%
R643	324-0531-00			3.32 MΩ	1 W	Prec	1%
R644	324-0531-00			3.32 MΩ	1 W	Prec	1%
R645	324-0531-00			3.32 MΩ	1 W	Prec	1%
R646	324-0531-00			3.32 MΩ	1 W	Prec	1%
R647	324-0531-00			3.32 MΩ	1 W	Prec	1%
R648	324-0531-00			3.32 MΩ	1 W	Prec	1%
R650	315-0101-00			100 Ω	1/4 W		5%
R651	315-0101-00			100 Ω	1/4 W		5%
R653	315-0104-00			100 kΩ	1/4 W		5%
R655	307-0093-00			1.2 Ω	1/2 W		5%
R656	307-0051-00			2.7 Ω	1/2 W		5%

A4 TIMING RAMP Circuit Card Assembly

*670-0372-00	B010100	B019999	Complete Card	

Capacitors

Tolerance ±20% unless otherwise indicated.

C11	283-0164-00	2.2 μF	Cer	25 V	
C12	283-0067-00	0.001 μF	Cer	200 V	10%
C25	283-0000-00	0.001 μF	Cer	500 V	
C42	285-0809-00	1 μF	Plastic	50 V	10%
C50	283-0178-00	0.1 μF	Cer	100 V	+80%-20%
C72	283-0059-00	1 μF	Cer	25 V	+80%-20%
C84	283-0178-00	0.1 μF	Cer	100 V	+80%-20%
C110	281-0523-00	100 pF	Cer	350 V	
C132	283-0178-00	0.1 μF	Cer	100 V	+80%-20%
C140	283-0059-00	1 μF	Cer	25 V	+80%-20%
C148	290-0135-00	15 μF	Elect.	20 V	
C160	283-0001-00	0.005 μF	Cer	500 V	
C163	283-0001-00	0.005 μF	Cer	500 V	
C167	290-0134-00	22 μF	Elect.	15 V	
C169	283-0001-00	0.005 μF	Cer	500 V	
C175	290-0309-00	100 μF	Elect.	25 V	

A4 TIMING RAMP Circuit Card Assembly (cont)

Ckt. No.	Tektronix Part No.	Serial/Model No. Eff	Disc	Description			
				Capacitors (cont)			
C192	281-0524-00			150 pF	Cer	500 V	
C196	281-0509-00			15 pF	Cer	500 V	10%
C202	281-0550-00			120 pF	Cer	500 V	10%
C203	281-0546-00			330 pF	Cer	500 V	10%
C205	281-0523-00			100 pF	Cer	350 V	
C210	290-0284-00			4.7 μF	Elect.	35 V	10%
C225	285-0702-00			0.033 μF	PTM	100 V	5%
C230	283-0178-00			0.1 μF	Cer	100 V	+80%-20%
C232	283-0000-00			0.001 μF	Cer	500 V	
C239	283-0003-00			0.01 μF	Cer	150 V	
C248	285-0683-00			0.022 μF	PTM	100 V	5%
C282	283-0178-00			0.1 μF	Cer	100 V	+80%-20%
C290	283-0059-00			1 μF	Cer	25 V	+80%-20%
C291	290-0286-00			50 μF	Elect.	25 V	+75%-10%
C292	283-0059-00			1 μF	Cer	25 V	+80%-20%
C293	283-0059-00			1 μF	Cer	25 V	+80%-20%
C294	283-0059-00			1 μF	Cer	25 V	+80%-20%
C295	290-0286-00			50 μF	Elect.	25 V	+75%-10%
C296	283-0059-00			1 μF	Cer	25 V	+80%-20%
				Semiconductor Device, Diodes			
CR18	*152-0185-00			Silicon	Replaceable by 1N4152		
CR20	*152-0185-00			Silicon	Replaceable by 1N4152		
CR21	*152-0185-00			Silicon	Replaceable by 1N4152		
CR30	*152-0185-00			Silicon	Replaceable by 1N4152		
CR31	*152-0185-00			Silicon	Replaceable by 1N4152		
CR35	*152-0185-00			Silicon	Replaceable by 1N4152		
CR40	*152-0185-00			Silicon	Replaceable by 1N4152		
CR74	*152-0185-00			Silicon	Replaceable by 1N4152		
CR75	*152-0185-00			Silicon	Replaceable by 1N4152		
CR92	*152-0185-00			Silicon	Replaceable by 1N4152		

A4 TIMING RAMP Circuit Card Assembly (cont)

Ckt. No.	Tektronix Part No.	Serial/Model No. Eff	Disc	Description
		Semiconductor Device, Diodes (cont)		
CR94	*152-0185-00			Silicon Replaceable by 1N4152
CR95	*152-0185-00			Silicon Replaceable by 1N4152
CR97	*152-0185-00			Silicon Replaceable by 1N4152
CR98	*152-0185-00			Silicon Replaceable by 1N4152
CR104	*152-0185-00			Silicon Replaceable by 1N4152
CR110	*152-0185-00			Silicon Replaceable by 1N4152
CR116	*152-0185-00			Silicon Replaceable by 1N4152
CR146	*152-0185-00			Silicon Replaceable by 1N4152
CR150	*152-0185-00			Silicon Replaceable by 1N4152
CR151	*152-0185-00			Silicon Replaceable by 1N4152
CR160	*152-0185-00			Silicon Replaceable by 1N4152
CR161	*152-0185-00			Silicon Replaceable by 1N4152
CR162	*152-0185-00			Silicon Replaceable by 1N4152
CR163	*152-0185-00			Silicon Replaceable by 1N4152
CR164	*152-0185-00			Silicon Replaceable by 1N4152
CR165	*152-0185-00			Silicon Replaceable by 1N4152
CR169	*152-0185-00			Silicon Replaceable by 1N4152
CR174	*152-0185-00			Silicon Replaceable by 1N4152
CR175	*152-0185-00			Silicon Replaceable by 1N4152
CR177	*152-0185-00			Silicon Replaceable by 1N4152
CR191	*152-0185-00			Silicon Replaceable by 1N4152
CR198	*152-0185-00			Silicon Replaceable by 1N4152
CR200	*152-0185-00			Silicon Replaceable by 1N4152
CR206	152-0079-00			Germanium HD1841
CR210	*152-0185-00			Silicon Replaceable by 1N4152
CR227	*152-0185-00			Silicon Replaceable by 1N4152
CR246	*152-0185-00			Silicon Replaceable by 1N4152
CR252	*152-0185-00			Silicon Replaceable by 1N4152
VR173	152-0278-00			Zener 1N4372A 400 mW, 3 V, 5%
VR190	152-0278-00			Zener 1N4372A, 400 mW, 3 V, 5%

A4 TIMING RAMP Circuit Card Assembly (cont)

Ckt. No.	Tektronix Part No.	Serial/Model No. Eff	Disc	Description		
				Fuse		
F177	159-0044-00			2/10 A	3AG	Slo-Blo
				Transistors		
Q15	151-0190-00			Silicon	NPN	TO-92 2N3904
Q46	151-1011-00			Silicon	FET	N channel, junction type
Q102	151-0190-00			Silicon	NPN	TO-92 2N3904
Q174	151-0183-00			Silicon	NPN	TO-5 Selected from 2N2192
				Resistors		
Resistors are fixed, composition, ±10% unless otherwise indicated.						
R11	315-0473-00			47 kΩ	1/4 W	5%
R12	315-0473-00			47 kΩ	1/4 W	5%
R13	315-0103-00			10 kΩ	1/4 W	5%
R14	315-0272-00			2.7 kΩ	1/4 W	5%
R15	315-0183-00			18 kΩ	1/4 W	5%
R16	315-0102-00			1 kΩ	1/4 W	5%
R18	315-0103-00			10 kΩ	1/4 W	5%
R20	315-0152-00			1.5 kΩ	1/4 W	5%
R21	315-0153-00			15 kΩ	1/4 W	5%
R22	315-0472-00			4.7 kΩ	1/4 W	5%
R23	315-0223-00			22 kΩ	1/4 W	5%
R24	315-0103-00			10 kΩ	1/4 W	5%
R25	315-0223-00			22 kΩ	1/4 W	5%
R30	315-0152-00			1.5 kΩ	1/4 W	5%
R31	315-0153-00			15 kΩ	1/4 W	5%
R32	315-0472-00			4.7 kΩ	1/4 W	5%

A4 TIMING RAMP Circuit Card Assembly (cont)

Ckt. No.	Tektronix Part No.	Serial/Model No. Eff	Disc	Description			
				Resistors (cont)			
R33	315-0223-00			22 kΩ	1/4 W		5%
R34	315-0103-00			10 kΩ	1/4 W		5%
R35	315-0223-00			22 kΩ	1/4 W		5%
R37	315-0222-00			2.2 kΩ	1/4W		5%
R39	315-0223-00			22 kΩ	1/4 W		5%
R40	315-0103-00			10 kΩ	1/4 W		5%
R41	315-0333-00			33 kΩ	1/4 W		5%
R43	321-0174-00			634 Ω	1/8 W	Prec	1%
R44	311-0462-00			1 kΩ, Var			
R45	321-0281-00			8.25 kΩ	1/8 W	Prec	1%
R46	322-0481-00			1 MΩ	1/4 W	Prec	1%
R48	315-0822-00			8.2 kΩ	1/4 W		5%
R50	315-0822-00			8.2 kΩ	1/4 W		5%
R52	321-0318-00			20 kΩ	1/8 W	Prec	1%
R53	321-0335-00			30.1 kΩ	1/8 W	Prec	1%
R54	315-0472-00			4.7 kΩ	1/4 W		5%
R56	315-0103-00			10 kΩ	1/4 W		5%
R60	321-0207-00			1.4 kΩ	1/8 W	Prec	1%
R61	321-0335-00			30.1 kΩ	1/8 W	Prec	1%
R62	315-0472-00			4.7 kΩ	1/4 W		5%
R64	315-0103-00			10 kΩ	1/4 W		5%
R70	321-0312-00			17.4 kΩ	1/8 W	Prec	1%
R71	321-0335-00			30.1 kΩ	1/8 W	Prec	1%
R72	315-0472-00			4.7 kΩ	1/4 W		5%
R74	315-0103-00			10 kΩ	1/4 W		5%
R75	315-0102-00			1 kΩ	1/4 W		5%
R80	315-0472-00			4.7 kΩ	1/4 W		5%
R81	315-0683-00			68 kΩ	1/4 W		5%
R83	315-0103-00			10 kΩ	1/4 W		5%
R84	315-0472-00			4.7 kΩ	1/4 W		5%
R86	315-0103-00			10 kΩ	1/4 W		5%
R90	315-0472-00			4.7 kΩ	1/4 W		5%
R92	315-0222-00			2.2 kΩ	1/4 W		5%
R94	315-0103-00			10 kΩ	1/4 W		5%
R96	315-0682-00			6.8 kΩ	1/4 W		5%

A4 TIMING RAMP Circuit Card Assembly (cont)

Ckt. No.	Tektronix Part No.	Serial/Model No. Eff	Disc	Description			
				Resistors (cont)			
R100	315-0103-00			10 kΩ	1/4 W		5%
R101	315-0472-00			4.7 kΩ	1/4 W		5%
R102	315-0104-00			100 kΩ	1/4 W		5%
R104	315-0470-00			47 Ω	1/4 W		5%
R110	315-0472-00			4.7 kΩ	1/4 W		5%
R112	315-0333-00			33 kΩ	1/4 W		5%
R114	315-0222-00			2.2 kΩ	1/4 W		5%
R116	315-0152-00			1.5 kΩ	1/4 W		5%
R120	311-0463-00			5 kΩ, Var			
R121	321-0260-00			4.99 kΩ	1/8 W	Prec	1%
R122	321-0354-00			47.5 kΩ	1/8 W	Prec	1%
R123	321-0362-00			57.6 kΩ	1/8 W	Prec	1%
R124	315-0183-00			18 kΩ	1/4 W		5%
R125	311-0510-00			10 kΩ, Var			
R126	315-0332-00			3.3 kΩ	1/4 W		5%
R127	321-0162-00			475 Ω	1/8 W	Prec	1%
R128	321-0258-00			4.75 kΩ	1/8 W	Prec	1%
R129	321-0258-00			4.75 kΩ	1/8 W	Prec	1%
R130	321-0270-00			6.34 kΩ	1/8 W	Prec	1%
R132	321-0330-00			26.7 kΩ	1/8 W	Prec	1%
R133	321-0314-00			18.2 kΩ	1/8 W	Prec	1%
R135	321-0251-00			4.02 kΩ	1/8 W	Prec	1%
R136	321-0193-00			1 kΩ	1/8 W	Prec	1%
R138	315-0821-00			820 Ω	1/4 W		5%
R140	315-0101-00			100 Ω	1/4 W		5%
R142	315-0332-00			3.3 kΩ	1/4 W		5%
R143	315-0103-00			10 kΩ	1/4 W		5%
R144	315-0104-00			100 kΩ	1/4 W		5%
R146	315-0152-00			1.5 kΩ	1/4 W		5%
R148	315-0472-00			4.7 kΩ	1/4 W		5%
R150	315-0472-00			4.7 kΩ	1/4 W		5%
R151	315-0473-00			47 kΩ	1/4 W		5%
R153	315-0103-00			10 kΩ	1/4 W		5%
R155	315-0472-00			4.7 kΩ	1/4 W		5%
R160	315-0472-00			4.7 kΩ	1/4 W		5%

A4 TIMING RAMP Circuit Card Assembly (cont)

Ckt. No.	Tektronix Part No.	Serial/Model No. Eff	Disc	Description			
				Resistors (cont)			
R161	315-0223-00			22 kΩ	1/4 W		5%
R163	315-0472-00			4.7 kΩ	1/4 W		5%
R164	315-0223-00			22 kΩ	1/4 W		5%
R165	315-0393-00			39 kΩ	1/4 W		5%
R167	315-0152-00			1.5 kΩ	1/4 W		5%
R169	315-0153-00			15 kΩ	1/4 W		5%
R171	315-0152-00			1.5 kΩ	1/4 W		5%
R172	315-0103-00			10 kΩ	1/4 W		5%
R173	315-0222-00			2.2 kΩ	1/4 W		5%
R174	315-0104-00			100 kΩ	1/4 W		5%
R190	315-0223-00			22 kΩ	1/4 W		5%
R191	315-0472-00			4.7 kΩ.	1/4 W		5%
R192	315-0473-00			47 kΩ	1/4 W		5%
R193	311-0510-00			10 kΩ, Var			
R194	315-0222-00			2.2 kΩ	1/4 W		5%
R196	315-0473-00			47 kΩ	1/4 W		5%
R197	315-0472-00			4.7 kΩ	1/4 W		5%
R198	315-0332-00			3.3 kΩ	1/4 W		5%
R200	315-0332-00			3.3 kΩ	1/4 W		5%
R201	315-0102-00			1 kΩ	1/4 W		5%
R203	311-0510-00			10 kΩ, Var			
R204	315-0221-00			220 Ω	1/4 W		5%
R205	315-0472-00			4.7 kΩ	1/4 W		5%
R206	315-0223-00			22 kΩ	1/4 W		5%
R208	315-0222-00			2.2 kΩ	1/4 W		5%
R210	311-0496-00			2.5 kΩ, Var			
R211	315-0103-00			10 kΩ	1/4 W		5%
R213	315-0331-00			330 Ω	1/4 W		5%
R215	315-0332-00			3.3 kΩ	1/4 W		5%
R216	301-0150-00			15Ω	1/2 W		5%
R220	321-0260-00			4.99 kΩ	1/8 W	Prec	5%
R221	311-0510-00			10 kΩ, Var			
R222	321-0436-00			340 kΩ	1/8 W	Prec	1%
R232	321-0244-00			3.4 kΩ	1/8 W	Prec	1%
R233	321-0306-00			15 kΩ	1/8 W	Prec	1%
R235	315-0153-00			15 kΩ	1/4 W		5%

A4 TIMING RAMP Circuit Card Assembly (cont)

Ckt. No.	Tektronix Part No.	Serial/Model No. Eff	Disc	Description			
				Resistors (cont)			
R237	315-0472-00			4.7 kΩ	1/4 W		5%
R239	315-0153-00			15 kΩ	1/4 W		5%
R241	321-0248-00			3.74 kΩ	1/8 W	Prec	1%
R242	321-0306-00			15 kΩ	1/8 W	Prec	1%
R244	315-0103-00			10 kΩ	1/4 W		5%
R246	315-0332-00			3.3 kΩ	1/4 W		5%
R248	315-0472-00			4.7 kΩ	1/4 W		5%
R250	315-0223-00			22 kΩ	1/4 W		5%
R252	315-0102-00			1 kΩ	1/4 W		5%
R254	315-0472-00			4.7 kΩ	1/4 W		5%
R255	315-0472-00			4.7 kΩ	1/4 W		5%
R256	315-0333-00			33 kΩ	1/4 W		5%
R258	315-0472-00			4.7 kΩ	1/4 W		5%
R260	315-0274-00			270 kΩ	1/4 W		5%
R262	315-0222-00			2.2 kΩ	1/4 W		5%
R624	315-0152-00			1.5 kΩ	1/4 W		5%
R270	311-0463-00			5 kΩ, Var			
R271	321-0265-00			5.62 kΩ	1/8 W	Prec	1%
R272	321-0354-00			47.5 kΩ	1/8 W	Prec	1%
R273	321-0354-00			47.5 kΩ	1/8 W	Prec	1%
R274	315-0473-00			47 kΩ	1/4 W		5%
R275	311-0510-00			10 kΩ, Var			
R276	315-0222-00			2.2 kΩ	1/4 W		5%
R277	321-0226-00			2.21 kΩ	1/8 W	Prec	1%
R278	321-0226-00			2.21 kΩ	1/8 W	Prec	1%
R279	321-0310-00			16.5 kΩ	1/8 W	Prec	1%
R282	321-0330-00			26.7 kΩ	1/8 W	Prec	1%
R283	321-0369-00			68.1 kΩ	1/8 W	Prec	1%
R285	321-0251-00			4.02 kΩ	1/8 W	Prec	1%
R286	321-0193-00			1 kΩ	1/8 W	Prec	1%
R288	315-0821-00			820 Ω	1/4 W		5%
R290	307-0103-00			2.7 Ω	1/4 W		5%
R291	315-0100-00			10 Ω	1/4 W		5%
R292	315-0100-00			10 Ω	1/4 W		5%
R293	315-0100-00			10 Ω	1/4 W		5%
R294	315-0100-00			10 Ω	1/4 W		5%
R295	307-0103-00			2.7 Ω	1/4 W		5%
R296	315-0100-00			10 Ω	1/4 W		5%

A4 TIMING RAMP Circuit Card Assembly (cont)

Ckt. No.	Tektronix Part No.	Serial/Model No. Eff	Disc	Description			
				Switches			
S128	260-0984-00			Slide			
S138	260-0723-00			Slide			
S278	260-0984-00			Slide			
				Integrated Circuits			
U25	156-0048-00			Linear	Replaceable by RCA CA3046		
U50	156-0049-00			Op ampl	Replaceable by Fairchild μA741C		
U54	156-0048-00			Linear	Replaceable by RCA CA3046		
U114	156-0048-00			Linear	Replaceable by RCA CA3046		
U132	156-0049-00			Op Ampl	Replaceable by Fairchild μA741C		
U144	156-0048-00			Linear	Replaceable by RCA CA3046		
U225	156-0048-00			Linear	Replaceable by RCA CA3046		
U230	156-0049-00			Op Ampl	Replaceable by Fairchild μA741C		
U282	156-0049-00			Op Ampl	Replaceable by Fairchild μA741C		
				A4 TIMING RAMP Circuit Card Assembly			
	*670-0372-00	B020000		Complete Card			
				Capacitors			
Tolerance ±20% unless otherwise indicated.							
C11	283-0164-00			2.2 μF	Cer	25 V	
C12	283-0067-00			0.001 μF	Cer	200 V	10%
C25	283-0067-00			0.001 μF	Cer	200 V	10%
C42	285-0894-00			5 μF	Plastic	50 V	5%
C50	283-0178-00			0.1 μF	Cer	100 V	+80%-20%
C61	283-0059-00			1 μF	Cer	25 V	+80%-20%
C93	283-0178-00			0.1 μF	Cer	100 V	+80%-20%
C110	281-0523-00			100 pF	Cer	350 V	
C132	283-0178-00			0.1 μF	Cer	100 V	+80%-20%
C140	283-0001-00			0.005 μF	Cer	500 V	
C143	290-0286-00			50 μF	Elect.	25 V	+75%-10%
C150	283-0059-00			1 μF	Cer	25 V	+80%-20%
C158	290-0135-00			15 μF	Elect.	20 V	
C161	283-0003-00			0.01 μF	Cer	150 V	
C170	283-0001-00			0.005 μF	Cer	500 V	

A4 TIMING RAMP Circuit Card Assembly (cont)

Ckt. No.	Tektronix Part No.	Serial/Model No. Eff	Disc	Description			
				Capacitors (cont)			
C173	283-0001-00			0.005 μF	Cer	500 V	
C177	290-0134-00			22 μF	Elect.	15 V	
C178	290-0309-00			100 μF	Elect.	25 V	
C179	283-0001-00			0.005 μF	Cer	500 V	
C192	281-0524-00			150 pF	Cer	500 V	
C196	281-0509-00			15 pF	Cer	500 V	10%
C202	281-0550-00			120 pF	Cer	500 V	10%
C203	281-0546-00			330 pF	Cer	500 V	10%
C205	281-0523-00			100 pF	Cer	350 V	
C210	290-0284-00			4.7 μF	Elect.	35 V	10%
C225	285-0702-00			0.033 μF	PTM	100 V	5%
C230	283-0178-00			0.1 μF	Cer	100 V	+80%-20%
C232	283-0067-00			0.001 μF	Cer	200 V	10%
C239	285-0598-00			0.01 μF	PTM	100 V	5%
C248	285-0683-00			0.022 μF	PTM	100 V	5%
C282	283-0178-00			0.1 μF	Cer	100 V	-80%-20%
C290	283-0164-00			2.2 μF	Cer	25 V	
C291	290-0286-00			50 μF	Elect.	25 V	+75%-10%
C292	283-0164-00			2.2 μF	Cer	25 V	
C293	283-0164-00			2.2 μF	Cer	25 V	
C294	283-0164-00			2.2 μF	Cer	25 V	
C295	290-0286-00			50 μF	Elect.	25 V	+75%-10%
C296	283-0164-00			2.2 μF	Cer	25 V	
C297	283-0164-00			2.2 μF	Cer	25 V	
				Semiconductor Device, Diodes			
CR18	*152-0185-00			Silicon	Replaceable by 1N4152		
CR32	*152-0185-00			Silicon	Replaceable by 1N4152		
CR34	*152-0185-00			Silicon	Replaceable by 1N4152		
CR40	*152-0185-00			Silicon	Replaceable by 1N4152		
CR74	*152-0185-00			Silicon	Replaceable by 1N4152		
CR75	*152-0185-00			Silicon	Replaceable by 1N4152		
CR94	*152-0185-00			Silicon	Replaceable by 1N4152		
CR95	*152-0185-00			Silicon	Replaceable by 1N4152		
CR97	*152-0185-00			Silicon	Replaceable by 1N4152		
CR98	*152-0185-00			Silicon	Replaceable by 1N4152		
CR104	*152-0185-00			Silicon	Replaceable by 1N4152		
CR110	*152-0185-00			Silicon	Replaceable by 1N4152		
CR116	*152-0185-00			Silicon	Replaceable by 1N4152		
CR140	*152-0185-00			Silicon	Replaceable by 1N4152		
CR144	*152-0185-00			Silicon	Replaceable by 1N4152		

A4 TIMING RAMP Circuit Card Assembly (cont)

Ckt. No.	Tektronix Part No.	Serial/Model No. Eff	Disc	Description
				Semiconductor Device, Diodes (cont)
CR156	*152-0185-00			Silicon Replaceable by 1N4152
CR160	*152-0185-00			Silicon Replaceable by 1N4152
CR161	*152-0185-00			Silicon Replaceable by 1N4152
CR170	*152-0185-00			Silicon Replaceable by 1N4152
CR171	*152-0185-00			Silicon Replaceable by 1N4152
CR172	*152-0185-00			Silicon Replaceable by 1N4152
CR173	*152-0185-00			Silicon Replaceable by 1N4152
CR174	*152-0185-00			Silicon Replaceable by 1N4152
CR175	*152-0185-00			Silicon Replaceable by 1N4152
CR177	*152-0185-00			Silicon Replaceable by 1N4152
CR178	*152-0185-00			Silicon Replaceable by 1N4152
CR179	*152-0185-00			Silicon Replaceable by 1N4152
CR187	*152-0185-00			Silicon Replaceable by 1N4152
CR191	*152-0185-00			Silicon Replaceable by 1N4152
CR198	*152-0185-00			Silicon Replaceable by 1N4152
CR200	*152-0185-00			Silicon Replaceable by 1N4152
CR206	152-0079-00			Germanium HD1841
CR210	*152-0185-00			Silicon Replaceable by 1N4152
CR227	*152-0185-00			Silicon Replaceable by 1N4152
CR246	*152-0185-00			Silicon Replaceable by 1N4152
CR252	*152-0185-00			Silicon Replaceable by 1N4152
VR183	152-0278-00			Zener 1N4372A 400 mW, 3 V, 5%
VR190	152-0278-00			Zener 1N4372A 400 mW, 3 V, 5%
				Fuse
F187	159-0044-00			2/10 A 3AG Slo-Blo
				Transistors
Q40	151-0190-00			Silicon NPN TO-92 2N3904
Q46 A,B	151-1011-00			Silicon FET TO-71 N channel, junction type
Q102	151-0190-00			Silicon NPN TO-92 2N3904
Q175	151-0190-00			Silicon NPN TO-92 2N3904
Q180	151-0190-00			Silicon NPN TO-92 2N3904
Q185	*151-0183-00			Silicon NPN TO-5 Selected from 2N2192

A4 TIMING RAMP Circuit Card Assembly (cont)

Ckt. No.	Tektronix Part No.	Serial/Model No. Eff	Disc	Description			
				Resistors			
Resistors are fixed, composition, ±10% unless otherwise indicated.							
R11	315-0473-00			47 kΩ	1/4 W		5%
R12	315-0473-00			47 kΩ	1/4 W		5%
R13	315-0103-00			10 kΩ	1/4 W		5%
R14	315-0272-00			2.7 kΩ	1/4 W		5%
R15	315-0183-00			18 kΩ	1/4 W		5%
R16	315-0102-00			1 kΩ	1/4 W		5%
R18	315-0103-00			10 kΩ	1/4 W		5%
R20	315-0152-00			1.5 kΩ	1/4 W		5%
R21	315-0153-00			15 kΩ	1/4 W		5%
R25	315-0473-00			47 kΩ	1/4 W		5%
R30	315-0152-00			1.5 kΩ	1/4 W		5%
R31	315-0153-00			15 kΩ	1/4 W		5%
R33	315-0222-00			2.2 kΩ	1/4 W		5%
R34	315-0152-00			1.5 kΩ	1/4 W		5%
R35	315-0473-00			47 kΩ	1/4 W		5%
R37	315-0683-00			68 kΩ	1/4 W		5%
R38	315-0472-00			4.7 kΩ	1/4 W		5%
R40	315-0103-00			10 kΩ	1/4 W		5%
R41	315-0333-00			33 kΩ	1/4 W		5%
R43	321-0251-00			4.02 kΩ	1/8 W	Prec	1%
R44	311-0510-00			10 kΩ, Var			
R46	322-0481-00			1 MΩ	1/4 W	Prec	1%
R48	315-0822-00			8.2 kΩ	1/4 W		5%
R50	315-0822-00			8.2 kΩ	1/4 W		5%
R52	321-0318-00			20 kΩ	1/8 W	Prec	1%
R53	321-0335-00			30.1 kΩ	1/8 W	Prec	1%
R54	315-0472-00			4.7 kΩ	1/4 W		5%
R56	315-0103-00			10 kΩ	1/4 W		5%
R60	321-0312-00			17.4 kΩ	1/8 W	Prec	1%
R61	321-0335-00			30.1 kΩ	1/8 W	Prec	1%
R62	315-0472-00			4.7 kΩ	1/4 W		5%
R64	315-0103-00			10 kΩ	1/4 W		5%
R70	321-0207-00			1.4 kΩ	1/8 W	Prec	1%
R71	321-0335-00			30.1 kΩ	1/8 W	Prec	1%
R72	315-0472-00			4.7 kΩ	1/4 W		5%

A4 TIMING RAMP Circuit Card Assembly (cont)

Ckt. No.	Tektronix Part No.	Serial/Model No. Eff	Disc	Description			
				Resistors (cont)			
R74	315-0103-00			10 kΩ	1/4 W		5%
R75	315-0102-00			1 kΩ	1/4 W		5%
R80	315-0472-00			4.7 kΩ	1/4 W		5%
R81	315-0683-00			68 kΩ	1/4 W		5%
R83	315-0103-00			10 kΩ	1/4 W		5%
R90	315-0472-00			4.7 kΩ	1/4 W		5%
R92	315-0103-00			10 kΩ	1/4 W		5%
R93	315-0472-00			4.7 kΩ	1/4 W		5%
R95	315-0103-00			10 kΩ	1/4 W		5%
R96	315-0682-00			6.8 kΩ	1/4 W		5%
R100	315-0103-00			10 kΩ	1/4 W		5%
R101	315-0472-00			4.7 kΩ	1/4 W		5%
R102	315-0104-00			100 kΩ	1/4 W		5%
R104	315-0470-00			47 Ω	1/4 W		5%
R110	315-0472-00			4.7 kΩ	1/4 W		5%
R112	315-0333-00			33 kΩ	1/4 W		5%
R114	315-0222-00			2.2 kΩ	1/4 W		5%
R116	315-0152-00			1.5 kΩ	1/4 W		5%
R120	311-0463-00			5 kΩ, Var			
R121	321-0260-00			4.99 kΩ	1/8 W	Prec	1%
R122	321-0354-00			47.5 kΩ	1/8 W	Prec	1%
R123	321-0362-00			57.6 kΩ	1/8 W	Prec	1%
R124	315-0183-00			18 kΩ	1/4 W		5%
R125	311-0463-00			5 kΩ, Var			
R126	315-0332-00			3.3 kΩ	1/4 W		5%
R127	321-0162-00			475 Ω	1/8 W	Prec	1%
R128	321-0258-00			4.75 kΩ	1/8 W	Prec	1%
R129	321-0258-00			4.75 kΩ	1/8 W	Prec	1%
R130	321-0270-00			6.34 kΩ	1/8 W	Prec	1%
R132	321-0330-00			26.7 kΩ	1/8 W	Prec	1%
R133	321-0314-00			18.2 kΩ	1/8 W	Prec	1%
R135	321-0251-00			4.02 kΩ	1/8 W	Prec	1%
R136	321-0193-00			1 kΩ	1/8 W	Prec	1%
R138	315-0821-00			820 Ω	1/4 W		5%
R140	315-0104-00			100 kΩ	1/4 W		5%
R141	315-0473-00			47 kΩ	1/4 W		5%
R143	315-0152-00			1.5 kΩ	1/4 W		5%
R144	315-0333-00			33 kΩ	1/4 W		5%
R146	315-0223-00			22 kΩ	1/4 W		5%
R148	315-0152-00			1.5 kΩ	1/4 W		5%
R150	315-0101-00			100 Ω	1/4 W		5%

A4 TIMING RAMP Circuit Card Assembly (cont)

Ckt. No.	Tektronix Part No.	Serial/Model No. Eff	Disc	Description		
				Resistors (cont)		
R152	315-0332-00			3.3 kΩ	1/4 W	5%
R153	315-0103-00			10 kΩ	1/4 W	5%
R154	315-0104-00			100 kΩ	1/4 W	5%
R156	315-0152-00			1.5 kΩ	1/4 W	5%
R158	315-0472-00			4.7 kΩ	1/4 W	5%
R160	321-0312-00			17.4 kΩ	1/8 W Prec	1%
R163	315-0103-00			10 kΩ	1/4 W	5%
R164	315-0472-00			4.7 kΩ	1/4 W	5%
R170	321-0207-00			1.4 kΩ	1/8 W Prec	1%
R171	315-0223-00			22 kΩ	1/4 W	5%
R173	315-0472-00			4.7 kΩ	1/4 W	5%
R174	315-0223-00			22 kΩ	1/4 W	5%
R175	315-0393-00			39 kΩ	1/4 W	5%
R177	315-0152-00			1.5 kΩ	1/4 W	5%
R179	315-0153-00			15 kΩ	1/4 W	5%
R181	315-0152-00			1.5 kΩ	1/4 W	5%
R182	315-0103-00			10 kΩ	1/4 W	5%
R183	315-0222-00			2.2 kΩ	1/4 W	5%
R184	315-0104-00			100 kΩ	1/4 W	5%
R190	315-0223-00			22 kΩ	1/4 W	5%
R191	315-0472-00			4.7 kΩ	1/4 W	5%
R192	315-0473-00			47 kΩ	1/4 W	5%
R193	311-0510-00			10 kΩ, Var		
R194	315-0222-00			2.2 kΩ	1/4 W	5%
R196	315-0473-00			47 kΩ	1/4 W	5%
R197	315-0472-00			4.7 kΩ	1/4 W	5%
R198	315-0332-00			3.3 kΩ	1/4 W	5%
R200	315-0332-00			3.3 kΩ	1/4 W	5%
R201	315-0102-00			1 kΩ	1/4 W	5%
R203	311-0510-00			10 kΩ, Var		
R204	315-0221-00			220 Ω	1/4 W	5%
R205	315-0472-00			4.7 kΩ	1/4 W	5%
R206	315-0223-00			22 kΩ	1/4 W	5%
R208	315-0222-00			2.2 kΩ,	1/4 W	5%
R210	311-0496-00			2.5 kΩ, Var		
R211	315-0103-00			10 kΩ	1/4 W	5%
R213	315-0331-00			330 Ω	1/4 W	5%
R215	315-0332-00			3.3 kΩ	1/4 W	5%
R216	301-0150-00			15 Ω	1/2 W	5%
R220	321-0260-00			4.99 kΩ	1/8 W Prec	1%
R221	311-0510-00			10 kΩ, Var		

A4 TIMING RAMP Circuit Card Assembly (cont)

Ckt. No.	Tektronix Part No.	Serial/Model No. Eff	Disc	Description			
				Resistors (cont)			
R222	321-0436-00			340 kΩ	1/8 W	Prec	1%
R232	321-0244-00			3.4 kΩ	1/8 W	Prec	1%
R233	321-0306-00			15 kΩ	1/8 W	Prec	1%
R235	315-0153-00			15 kΩ	1/4 W		5%
R237	315-0472-00			4.7 kΩ	1/4 W		5%
R239	315-0153-00			15 kΩ	1/4 W		5%
R241	321-0248-00			3.74 kΩ	1/8 W	Prec	1%
R242	321-0306-00			15 kΩ	1/8 W	Prec	1%
R244	315-0103-00			10 kΩ	1/4 W		5%
R246	315-0332-00			3.3 kΩ	1/4 W		5%
R248	315-0472-00			4.7 kΩ	1/4 W		5%
R250	315-0223-00			22 kΩ	1/4 W		5%
R252	315-0102-00			1 kΩ	1/4 W		5%
R254	315-0472-00			4.7 kΩ	1/4 W		5%
R255	315-0472-00			4.7 kΩ	1/4 W		5%
R256	315-0333-00			33 kΩ	1/4 W		5%
R258	315-0472-00			4.7 kΩ	1/4 W		5%
R260	315-0274-00			270 kΩ	1/4 W		5%
R262	315-0222-00			2.2 kΩ	1/4 W		5%
R264	315-0152-00			1.5 kΩ	1/4 W		5%
R270	311-0463-00			5 kΩ, Var			
R271	321-0265-00			5.62 kΩ	1/8 W	Prec	1%
R272	321-0354-00			47.5 kΩ	1/8 W	Prec	1%
R273	321-0354-00			47.5 kΩ	1/8 W	Prec	1%
R274	315-0473-00			47 kΩ	1/4 W		5%
R275	311-0510-00			10 kΩ, Var			
R276	315-0222-00			2.2 kΩ	1/4 W		5%
R277	321-0226-00			2.21 kΩ	1/8 W	Prec	1%
R278	321-0226-00			2.21 kΩ	1/8 W	Prec	1%
R279	321-0310-00			16.5 kΩ	1/8 W	Prec	1%
R282	321-0330-00			26.7 kΩ	1/8 W	Prec	1%
R283	321-0369-00			68.1 kΩ	1/8 W	Prec	1%
R285	321-0251-00			4.02 kΩ	1/8 W	Prec	1%
R286	321-0193-00			1 kΩ	1/8 W	Prec	1%
R288	315-0821-00			820 Ω	1/4 W		5%

A4 TIMING RAMP Circuit Card Assembly (cont)

Ckt. No.	Tektronix Part No.	Serial/Model No. Eff	Disc	Description		
				Resistors (cont)		
R290	307-0103-00			2.7 Ω	1/4 W	5%
R291	315-0100-00			10 Ω	1/4 W	5%
R292	315-0100-00			10 Ω	1/4 W	5%
R293	315-0100-00			10 Ω	1/4 W	5%
R294	315-0100-00			10 Ω	1/4 W	5%
R295	307-0103-00			2.7 Ω	1/4 W	5%
R296	315-0100-00			10 Ω	1/4 W	5%
R297	315-0100-00			10 Ω	1/4 W	5%
				Switches		
	Wired or Unwired					
S128	260-0984-00			Slide	SLOW RAMP POS	
S138	260-0723-00			Slide	1V/5V	
S275	260-0984-00			Slide	FAST RAMP POS	
				INTEGRATED CIRCUITS		
U15	156-0048-00			Linear.	Replaceable by RCA CA3046	
U50	156-0049-00			Op ampl.	Replaceable by Fairchild μA741C	
U54	156-0048-00			Linear.	Replaceable by RCA CA3046	
U114	156-0048-00			Linear.	Replaceable by RCA CA3046	
U132	156-0049-00			Op ampl.	Replaceable by Fairchild μA741C	
U145	156-0048-00			Linear.	Replaceable by RCA CA3046	
U225	156-0048-00			Linear.	Replaceable by RCA CA3046	
U230	156-0049-00			Op ampl.	Replaceable by Fairchild μA741C	
U282	156-0049-00			Op ampl.	Replaceable by Fairchild μA741C	

A5 DEFLEC AMP & DYN FOCUS Circuit Card Assembly

	*670-0374-00			Complete Card		
				Capacitors		
Tolerance ±20% unless otherwise indicated.						
C401	290-0175-00			10 μF	Elect.	35 V
C411	283-0177-00			1 μF	Cer	25 V +80%-20%
C412	283-0177-00			1 μF	Cer	25 V +80%-20%
C443	283-0164-00			2.2 μF	Cer	25 V
C445	283-0164-00			2.2 μF	Cer	25 V
C472	283-0085-00			2700 ΩF	Cer	1000 V 5%
				Semiconductor Device, Diodes		
CR402	*152-0185-00			Silicon	Replaceable by 1N4152	
CR403	*152-0185-00			Silicon	Replaceable by 1N4152	
CR404	*152-0185-00			Silicon	Replaceable by 1N4152	
CR405	*152-0185-00			Silicon	Replaceable by 1N4152	
CR411	*152-0185-00			Silicon	Replaceable by 1N4152	

A5 DEFLFC AMP & DYN FOCUS Circuit Card Assembly (cont)

Ckt. No.	Tektronix Part No.	Serial/Model No. Eff	Disc	Description		
				Semiconductor Device, Diodes (cont)		
CR414	*152-0185-00			Silicon	Replaceable by 1N4152	
CR448	*152-0185-00			Silicon	Replaceable by 1N4152	
CR449	*152-0185-00			Silicon	Replaceable by 1N4152	
CR451	*152-0185-00			Silicon	Replaceable by 1N4152	
CR452	*152-0185-00			Silicon	Replaceable by 1N4152	
CR482	*152-0185-00			Silicon	Replaceable by 1N4152	
CR483	*152-0185-00			Silicon	Replaceable by 1N4152	
CR484	*152-0185-00			Silicon	Replaceable by 1N4152	
VR445	152-0127-00			Zener	1N755A 400 mW, 7.5 V, 5%	
VR459	152-0279-00			Zener	1N751A 400 mW, 5.1 V, 5%	
VR471	152-0243-00			Zener	1N965B 400 mW, 15 V, 5%	
				Transistors		
Q420	*151-0136-00			Silicon	NPN	TO-5 Replaceable by 2N3053
Q424	*151-0134-00			Silicon	PNP	TO-5 Replaceable by 2N3905
Q440	*151-0192-00			Silicon	NPN	TO-92 Replaceable by MPS 6521
Q456	151-0188-00			Silicon	PNP	TO-92 2N3906
Q464	151-0232-00			Silicon	NPN	TO-77 Dual
Q472	151-0169-00			Silicon	NPN	TO-5 2N3439
Q490	151-0190-00			Silicon	NPN	TO-92 2N3904
Q496	151-0188-00			Silicon	PNP	TO-92 2N3906
				Resistors		
Resistors are fixed, composition, ±10% unless otherwise indicated						
R401	311-0863-00			500 Ω, Var		
R402	321-0193-00			1 kΩ	1/8 W	Prec 1%
R403	315-0102-00			1 kΩ	1/4 W	5%
R404	315-0472-00			4.7 kΩ	1/4 W	5%
R406	315-0153-00			15 kΩ	1/4 W	5%
R407	315-0270-00			27 Ω	1/4 W	5%
R408	321-0339-00			33.2 kΩ	1/8 W	Prec 1%
R409	321-0318-00			20 kΩ	1/8 W	Prec 1%
R411	315-0682-00			6.8 kΩ	1/4 W	5%
R412	315-0301-00			300 Ω	1/4 W	5%
R414	315-0301-00			300 Ω	1/4 W	5%
R415	315-0682-00			6.8 kΩ	1/4 W	5%
R420	315-0560-00			56 Ω	1/4 W	5%
R421	315-0102-00			1 kΩ	1/4 W	5%
R423	315-0102-00			1 kΩ	1/4 W	5%
R424	315-0560-00			56 Ω	1/4 W	5%
R426	308-0244-00			0.3 Ω	2 W	WW
R427	308-0244-00			0.3 Ω	2 W	WW
R428	301-0430-00			43 Ω	1/2 W	5%
R429	*310-0535-00			1 Ω	4 W	Prec 1/2%

A5 DEFLEC AMP & DYN FOCUS Circuit Card Assembly (cont)

Ckt. No.	Tektronix Part No.	Serial/Model No. Eff	Disc	Description			
				Resistors (cont)			
R431	311-0868-00			25 kΩ, Var			
R432	315-0155-00			1.5 MΩ	1/4 W		5%
R434	315-0153-00			15 kΩ	1/4 W		5%
R440	315-0103-00			10 kΩ	1/4 W		5%
R441	315-0473-00			47 kΩ	1/4 W		5%
R443	321-0215-00			1.69 kΩ	1/8 W	Prec	1%
R445	321-0218-00			1.82 kΩ	1/8 W	Prec	1%
R448	315-0473-00			47 kΩ	1/4 W		5%
R449	315-0473-00			47 kΩ	1/4 W		5%
R451	315-0303-00			30 kΩ	1/4 W		5%
R453	311-0902-00			5 kΩ, Var			
R454	315-0333-00			33 kΩ	1/4 W		5%
R456	315-0471-00			470 Ω	1/4 W		5%
R458	311-0940-00			2.5 kΩ, Var			
R459	315-0202-00			2 kΩ	1/4 W		5%
R461	315-0102-00			1 kΩ	1/4 W		5%
R463	315-0472-00			4.7 kΩ	1/4 W		5%
R464	315-0102-00			1 kΩ	1/4 W		5%
R466	315-0182-00			1.8 kΩ	1/4 W		5%
R467	315-0101-00			100 Ω	1/4 W		5%
R468	315-0182-00			1.8 kΩ	1/4 W		5%
R470	315-0472-00			4.7 kΩ	1/4 W		5%
R471	315-0474-00			470 kΩ	1/4 W		5%
R472	303-0823-00			82 kΩ	1 W		5%
R473	315-0821-00			820 Ω	1/4 W		5%
R474	301-0205-00	B010100	B019999X	2 MΩ	1/2 W		5%
R475	311-0900-00	B010100	B019999X	10 kΩ, Var			
R480	315-0563-00			56 kΩ	1/4 W		5%
R481	315-0473-00			47 kΩ	1/4 W		5%
R482	311-0900-00			10 kΩ, Var			
R484	315-0473-00			47 kΩ	1/4 W		5%
R486	315-0473-00			47 kΩ	1/4 W		5%
R490	315-0101-00			100 Ω	1/4 W		5%
R492	315-0330-00			33 Ω	1/4 W		5%
R494	315-0330-00			33 Ω	1/4 W		5%
R496	315-0101-00			100 Ω	1/4 W		5%
				Switch			
	Wired or Unwired						
S428	260-0723-00			Slide	DFL AMP REV RAMP		
				Integrated Circuit			
U410	156-0049-00			Op ampl	Replaceable by Fairchild μA741C		

Ckt. No.	Tektronix Part No.	Serial/Model No. Eff	Disc	Description			
		A6 READ AMP & Z AXIS Circuit Card Assembly					
	*670-0375-00	B010100	B019999	Complete Card			
				Capacitors			
Tolerance ±20% unless otherwise indicated.							
C502	283-0059-00			1 μF	Cer	25 V	+80%-20%
C504	281-0546-00			330 pF	Cer	500 V	10%
C506	283-0059-00			1 μF	Cer	25 V	+80%-20%
C510	283-0059-00			1 μF	Cer	25 V	+80%-20%
C513	283-0059-00			1 μF	Cer	25 V	+80%-20%
C516	283-0094-00			27 pF	Cer	200 V	10%
C517	281-0092-00			9-35 pF, Var	Cer		
C528	283-0164-00			2.2 μF	Cer	25 V	
C532	283-0178-00			0.1 μF	Cer	100 V	+80%-20%
C548	283-0164-00			2.2 μF	Cer	25 V	
C549	283-0164-00			2.2 μF	Cer	25 V	
C550	283-0054-00			150 pF	Cer	200 V	5%
C576	283-0164-00			2.2 μF	Cer	25 V	
C589	290-0271-00			9 μF	Elect.	125 V	+20%-15%
C591	283-0059-00			1 μF	Cer	25 V	+80%-20%
C595	283-0059-00			1 μF	Cer	25 V	+80%-20%
C596	283-0164-00			2.2 μF	Cer	25 V	
C597	283-0164-00			2.2 μF	Cer	25 V	
				Semiconductor Device, Diodes			
CR503	*152-0185-00			Silicon	Replaceable by 1N4152		
CR504	*152-0185-00			Silicon	Replaceable by 1N4152		
CR532	*152-0185-00			Silicon	Replaceable by 1N4152		
VR576	152-0279-00			Zener	1N751A 400 mW, 5.1 V, 5%		
VR599	152-0309-00			Zener	1N3828A 1W, 6.2 V, 5%		
				Connector			
J501 (2)	131-0589-00			Terminal, pin			

A6 READ AMP & Z AXIS Circuit Card Assembly (cont)

Ckt. No.	Tektronix Part No.	Serial/Model No. Eff	Disc	Description			
				Transistors			
Q516	151-0188-00			Silicon	PNP	TO-92	2N3906
Q520	151-0254-00			Silicon	NPN	TO-98	2N5308
Q524	151-0254-00			Silicon	NPN	TO-98	2N5308
Q528	151-0254-00			Silicon	NPN	TO-98	2N5308
Q530	151-0188-00			Silicon	PNP	TO-92	2N3906
Q538	151-0254-00			Silicon	NPN	TO-98	2N5308
Q554	151-0190-00			Silicon	NPN	TO-92	2N3904
Q566	*151-0261-00			Silicon	PNP	TO-78	Dual, Tek Spec
Q576	*151-0124-00			Silicon	NPN	TO-5	Selected from 2N3119
Q582	*151-0124-00			Silicon	NPN	TO-5	Selected from 2N3119
Q586	151-0208-00			Silicon	PNP	TO-5	2N4036
Q592	151-0190-00			Silicon	NPN	TO-92	2N3904
Q596	151-0190-00			Silicon	NPN	TO-92	2N3904
				Resistors			
Resistors are fixed, composition, ±10% unless otherwise indicated.							
R501	321-0255-00			4.42 kΩ	1/8 W	Prec	1%
R502	321-0239-00			3.01 kΩ	1/8 W	Prec	1%
R504	311-0607-00			10 kΩ, Var			
R510	321-0162-00			475 Ω	1/8 W	Prec	1%
R511	321-0232-00			2.55 kΩ	1/8 W	Prec	1%
R513	321-0268-00			6.04 kΩ	1/8 W	Prec	1%
R514	321-0289-00			10 kΩ	1/8 W	Prec	1%
R516	321-0280-00			8.06 kΩ	1/8 W	Prec	1%
R520	315-0101-00			100 Ω	1/4 W		5%
R522	315-0202-00			2 kΩ	1/4 W		5%
R524	315-0102-00			1 kΩ	1/4 W		5%
R526	315-0512-00			5.1 kΩ	1/4 W		5%
R528	315-0102-00			1 kΩ	1/4 W		5%
R530	315-0100-00			10 Ω	1/4 W		5%
R532	315-0103-00			10 kΩ	1/4 W		5%

A6 READ AMP & Z AXIS Circuit Card Assembly (cont)

Ckt. No.	Tektronix Part No.	Serial/Model No. Eff	Disc	Description			
				Resistors (cont)			
R534	315-0273-00			27 kΩ	1/4 W		5%
R535	315-0273-00			27 kΩ	1/4 W		5%
R537	315-0101-00			100 Ω	1/4 W		5%
R539	315-0202-00			2 kΩ	1/4 W		5%
R541	321-0164-00			499 Ω	1/8 W	Prec	1%
R542	321-0189-00			909 Ω	1/8 W	Prec	1%
R543	311-0462-00			1 kΩ, Var			
R544	315-0101-00			100 Ω	1/4 W		5%
R546	321-0164-00			499 Ω	1/8 W	Prec	1%
R547	311-0462-00			1 kΩ, Var			
R550	315-0152-00			1.5 kΩ	1/4 W		5%
R552	315-0822-00			8.2 kΩ	1/4 W		5%
R554	315-0102-00			1 kΩ	1/4 W		5%
R555	315-0243-00			24 kΩ	1/4 W		5%
R557	315-0472-00			4.7 kΩ	1/4 W		5%
R563	315-0102-00			1 kΩ	1/4 W		5%
R565	315-0272-00			2.7 kΩ	1/4 W		5%
R566	315-0751-00			750 Ω	1/4 W		5%
R568	315-0182-00			1.8 kΩ	1/4 W		5%
R570	315-0272-00			2.7 kΩ	1/4 W		5%
R572	315-0182-00			1.8 kΩ	1/4 W		5%
R574	315-0102-00			1 kΩ	1/4 W		5%
R575	301-0223-00			22 kΩ	1/2 W		5%
R576	315-0100-00			10 Ω	1/4 W		5%
R577	315-0361-00			360 Ω	1/4 W		5%
R579	305-0103-00			10 kΩ	2 W		5%
R582	315-0101-00			100 Ω	1/4 W		5%
R584	315-0100-00			10 Ω	1/4 W		5%
R585	315-0100-00			10 Ω	1/4 W		5%
R587	315-0101-00			100 Ω	1/4 W		5%
R589	315-0510-00			51 Ω	1/4 W		5%
R590	321-0201-00			1.21 kΩ	1/8 W	Prec	1%
R591	321-0270-00			6.34 kΩ	1/8 W	Prec	1%
R592	315-0101-00			100 Ω	1/4 W		5%
R594	321-0263-00			5.36 kΩ	1/8 W	Prec	1%

A6 RFAD AMP & Z AXIS Circuit Card Assembly (cont)

Ckt. No.	Tektronix Part No.	Serial/Model No. Eff	Disc	Description			
				Resistors (cont)			
R595	321-0255-00			2.15 kΩ	1/8 W	Prec	1%
R596	315-0331-00			330 Ω	1/4 W		5%
R597	315-0472-00			4.7 kΩ	1/4 W		5%
R599	303-0241-00			240 Ω	1 W		5%
				Transformer			
T501	*120-0681-00			Toroid, three 12 turn windings			
				Integrated Circuits			
U506	156-0074-00			Diff video ampl. Replaceable by Fairchild μA733C			
U548	156-0013-00			Diff comparator. Replaceable by Fairchild μA710C			
U552	156-0045-00			Triple 3 input gate. Replaceable by Motorola MC892P			

A6 READ AMP & Z AXIS Circuit Card Assembly

	*670-0375-00	B020000		Complete Card			
				Capacitors			

Tolerance ±20% unless otherwise indicated.

C502	281-0546-00			330 pF	Cer	500 V	10%
C510	283-0178-00			0.1 μF	Cer	100 V	+80%-20%
C513	281-0543-00			270 pF	Cer	500 V	10%
C515	283-0178-00			0.1 μF	Cer	100 V	+80%-20%
C520	283-0178-00			0.1 μF	Cer	100 V	+80%-20%
C523	283-0059-00			1 μF	Cer	25 V	+80%-20%
C525	283-0178-00			0.1 μF	Cer	100 V	+80%-20%
C566	283-0164-00			2.2 μF	Cer	25 V	
C579	290-0271-00			9 μF	Elect.	125 V	+20%-15%
C581	283-0059-00			1 μF	Cer	25 V	+80%-20%
C584	283-0059-00			1 μF	Cer	25 V	+80%-20%
C587	283-0059-00			1 μF	Cer	25 V	+80%-20%
C589	283-0059-00			1 μF	Cer	25 V	+80%-20%
C591	283-0059-00			1 μF	Cer	25 V	+80%-20%
C594	283-0059-00			1 μF	Cer	25 V	+80%-20%
C596	283-0059-00			1 μF	Cer	25 V	+80%-20%
C598	283-0059-00			1 μF	Cer	25 V	+80%-20%

A6 READ AMP & Z AXIS Circuit Card Assembly (cont)

Ckt. No.	Tektronix Part No.	Serial/Model No. Eff	Disc	Description			
				Semiconductor Device, Diode			
VR566	152-0279-00			Zener	1N751A	400 mW, 5.1 V, 5%	
				Connectors			
J501 (2)	131-0589-00			Terminal pin			
				Transistors			
Q540	151-0190-00			Silicon	NPN	TO-92	2N3904
Q545	151-0190-00			Silicon	NPN	TO-92	2N3904
Q556 A,B	151-0261-00			Silicon	PNP	Tek Spec, dual	
Q566	*151-0124-00			Silicon	NPN	TO-5	Selected from 2N3119
Q572	*151-0124-00			Silicon	NPN	TO-5	Selected from 2N3119
Q576	151-0208-00			Silicon	PNP	TO-5	2N4036
Q580	151-0190-00			Silicon	NPN	TO-92	2N3904
Q586	151-0190-00			Silicon	NPN	TO-92	2N3904
Q590	151-0190-00			Silicon	NPN	TO-92	2N3904
Q596	151-0188-00			Silicon	PNP	TO-92	2N3906
				Resistors			
Resistors are fixed, composition ±10% unless otherwise indicated.							
R502	311-0633-00			5 kΩ, Var			
R510	315-0103-00			10 kΩ	1/4 W		5%
R511	315-0102-00			1 kΩ	1/4 W		5%
R515	315-0103-00			10 kΩ	1/4 W		5%
R516	315-0102-00			1 kΩ	1/4 W		5%
R520	315-0103-00			10 kΩ	1/4 W		5%
R522	315-0472-00			4.7 kΩ	1/4 W		5%
R523	311-0496-00			2.5 kΩ, Var			
R525	315-0103-00			10 kΩ	1/4 W		5%
R530	315-0152-00			1.5 kΩ	1/4 W		5%
R535	315-0822-00			8.2 kΩ	1/4 W		5%
R540	315-0102-00			1 kΩ	1/4 W		5%
R542	315-0331-00			330 Ω	1/4 W		5%
R543	315-0102-00			1 kΩ	1/4 W		5%
R545	315-0331-00			330 Ω	1/4 W		5%

A6 READ AMP & Z AXIS Circuit Card Assembly (cont)

Ckt. No.	Tektronix Part No.	Serial/Model No. Eff	Disc	Description		
				Resistors (cont)		
R553	315-0102-00			1 kΩ	1/4 W	5%
R555	315-0272-00			2.7 kΩ	1/4 W	5%
R556	315-0751-00			750 Ω	1/4 W	5%
R558	315-0182-00			1.8 kΩ	1/4 W	5%
R560	315-0272-00			2.7 kΩ	1/4 W	5%
R562	315-0182-00			1.8 kΩ	1/4 W	5%
R564	321-0193-00			1 kΩ	1/8 W Prec	1%
R565	323-0328-00			25.5 kΩ	1/2 W Prec	1%
R566	315-0100-00			10 Ω	1/4 W	5%
R567	315-0361-00			360 Ω	1/4 W	5%
R569	305-0103-00			10 kΩ	2 W	5%
R572	315-0101-00			100 Ω	1/4 W	5%
R574	315-0100-00			10 Ω	1/4 W	5%
R575	315-0100-00			10 Ω	1/4 W	5%
R577	315-0101-00			100 Ω	1/4 W	5%
R579	315-0510-00			51 Ω	1/4 W	5%
R580	321-0201-00			1.21 kΩ	1/8 W Prec	1%
R581	321-0270-00			6.34 kΩ	1/8 W Prec	1%
R583	315-0101-00			100 Ω	1/4 W	5%
R586	321-0251-00			4.02 kΩ	1/8 W Prec	1%
R587	321-0244-00			3.4 kΩ	1/8 W Prec	1%
R589	315-0101-00			100 Ω	1/4 W	5%
R590	321-0260-00			4.99 kΩ	1/8 W Prec	1%
R591	321-0225-00			2.15 kΩ	1/8 W Prec	1%
R593	315-0221-00			220 Ω	1/4 W	5%
R596	321-0244-00			3.4 kΩ	1/8 W Prec	1%
R597	321-0248-00			3.74 kΩ	1/8 W Prec	1%
R599	315-0101-00			100 Ω	1/4 W	5%
				Transformers		
T501	*120-0681-00			Toroid, three 12 turn windings		
T505	120-0459-00			Toroid, 10 turns, bifilar		
				Integrated Circuits		
U505	156-0074-00			Diff video ampl. Replaceable by Fairchild μA733C		
U515	156-0074-00			Diff video ampl. Replaceable by Fairchild μA733C		
U525	156-0013-00			Diff comparator. Replaceable by Fairchild μA710C		
U535	156-0045-00			Triple 3 input gate. Replaceable by Motorola MC892P		

Ckt. No.	Tektronix Part No.	Serial/Model No. Eff	Disc	Description			
				A7 INPUT SWITCH Circuit Board Assembly			
	*670-0376-00			Complete Board			
				Capacitors			
Tolerance ±20% unless otherwise indicated.							
C705	283-0203-00			0.47 μF	Cer	50 V	
C708	283-0198-00			0.22 μF	Cer	50 V	
				Semiconductor Device, Diodes			
CR705	*152-0185-00			Silicon	Replaceable by 1N4152		
CR708	*152-0185-00			Silicon	Replaceable by 1N4152		
				Connectors			
J700	131-0569-00			Receptacle, electrical			
J705	131-0569-00			Receptacle, electrical			
J710	131-0955-00			Receptacle, electrical, BNC			
J711	131-0955-00			Receptacle, electrical, BNC			
J712	131-0955-00			Receptacle, electrical, BNC			
				Relay			
K700	*108-0615-00			Coil, reed drive			
				Transistors			
Q700	151-0190-00			Silicon	NPN	TO-92	2N3904
Q710	151-0190-00			Silicon	NPN	TO-92	2N3904
				Resistors			
Resistors are fixed, composition, ±10% unless otherwise indicated.							
R701	315-0474-00			470 kΩ	1/4 W		5%
R703	315-0472-00			4.7 kΩ	1/4 W		5%
R705	315-0472-00			4.7 kΩ	1/4 W		5%
R708	315-0472-00			4.7 kΩ	1/4 W		5%
R710	315-0472-00			4.7 kΩ	1/4 W		5%
				Switches			
	Wired or Unwired						
S700A	260-0721-00			Reed, spdt			
S700B	260-0721-00			Reed, spdt			
S700C	260-0721-00			Reed, spdt			
S700D	260-0721-00			Reed, spdt			
S700E	260-0721-00			Reed, spdt			

MECHANICAL PARTS LIST

FIGURE 1 FRONT & FRAME

Fig. & Index No.	Tektronix Part No.	Serial/Model No. Eff	Disc	Qty	Description 1 2 3 4 5
1-1	426-0666-01			1	FRAME-PANEL, cabinet front
-2	348-0013-00			2	FOOT, rubber
-3	105-0199-00			2	STOP, latch
	- - - - - -			-	mounting hardware for each: (not included w/stop)
-4	211-0504-00			1	SCREW, 6-32 x 0.25 inch, PHS
-5	348-0128-00			2	FOOT, cabinet
	- - - - - -			-	mounting hardware for each: (not included w/foot)
-6	211-0514-00			2	SCREW, 6-32 x 0.75 inch, PHS
-7	210-0457-00			2	NUT, keps, 6-32 x 0.312 inch
-8	348-0128-00			2	FOOT, cabinet
	- - - - - -			-	mounting hardware for each: (not included w/foot)
-9	211-0514-00			2	SCREW, 6-32 x 0.75 inch, PHS
-10	210-0457-00			1	NUT, keps, 6-32 x 0.312 inch
-11	426-0688-00			1	FRAME SECTION, lower left
	- - - - - -			-	mounting hardware: (not included w/frame section)
-12	212-0043-00			4	SCREW, 8-32 x 0.50 inch, 100° csk, FHS
-13	426-0687-00			1	FRAME SECTION, lower right
	- - - - - -			-	mounting hardware: (not included w/frame section)
-14	212-0043-00			4	SCREW, 8-32 x 0.50 inch, 100° csk, FHS
-15	366-1264-00			1	KNOB, gray--CONTRAST
	- - - - - -			-	knob includes:
	213-0153-00			1	SETSCREW, 5-40 x 0.125 inch, HSS
-16	366-1263-00			1	PUSHBUTTON--COPY
-17	- - - - - -			1	RESISTOR, variable
	- - - - - -			-	mounting hardware: (not included w/resistor)
-18	213-0020-00			1	SETSCREW, 6-32 x 0.125 inch, HSS
-19	260-0574-00			1	SWITCH, push--COPY, w/hardware
	- - - - - -			-	mounting hardware: (not included w/switch)
-20	211-0025-00			2	SCREW, 4-40 x 0.375 inch, 100° csk, FHS
-21	210-0586-00			2	NUT, keps, 4-40 x 0.25 inch
-22	210-0414-00			2	NUT, hex., 0.469-32 x 0.562 inch
-23	407-0830-00			1	BRACKET, component mounting

FIGURE 1 FRONT & FRAME (cont)

Fig. & Index No.	Tektronix Part No.	Serial/Model No. Eff	Disc	Qty	Description 1 2 3 4 5
1-24	129-0006-00			1	POST, connecting
	- - - - - -			-	mounting hardware: (not included w/post)
-25	210-0006-00			1	WASHER, lock, internal, #6
-26	337-1364-00			1	SHIELD, electrical
	- - - - - -			-	mounting hardware: (not included w/shield)
-27	211-0504-00			2	SCREW, 6-32 x 0.25 inch, PHS
-28	131-0689-00			1	CONNECTOR, receptacle, female, 15 contact
	- - - - - -			-	mounting hardware: (not included w/connector)
-29	213-0192-00			2	SCRFW, thread forming 6-32 x 0.50 inch, Fil HS
-30	407-0833-00			1	BRACKET, component mounting, processor connector
	- - - - - -			-	mounting hardware: (not included w/bracket)
-31	211-0504-00			2	SCREW, 6-32 x 0.25 inch, PHS
-32	352-0264-00			1	HOLDER, interconnecting cable
	- - - - - -			-	mounting hardware: (not included w/holder)
-33	211-0504-00			2	SCREW, 6-32 x 0.25 inch, PHS
-34	260-1198-00			1	SWITCH, rocker--POWER
	- - - - - -			-	mounting hardware: (not included w/switch)
-35	211-0038-00			2	SCREW, 4-40 x 0.188 inch, 100° csk, FHS
-36	210-0586-00			2	NUT, keps, 4-40 x 0.25 inch
-37	- - - - - -			2	DIODE
	- - - - - -			-	mounting hardware for each: (not included w/diode)
-38	210-0010-00			1	WASHER, lock, internal, #10
-39	426-0685-00			1	FRAME SECTION, upper right
	- - - - - -			-	mounting hardware: (not included w/frame section)
-40	212-0043-00			2	SCREW, 8-32 x 0.50 inch, 100° csk, FHS
-41	426-0686-00			1	FRAME SECTION, upper left
	- - - - - -			-	mounting hardware: (not included w/frame section)
-42	212-0043-00			2	SCREW, 8-32 x 0.50 inch, 100° csk, FHS

FIGURE 1 FRONT & FRAME (cont)

Fig. & Index No.	Tektronix Part No.	Serial/Model No. Eff	Disc	Qty	Description 1 2 3 4 5
1-43	390-0179-00			1	CABINET BOTTOM
	- - - - - -			-	cabinet bottom includes:
	214-0816-00			6	LATCH ASSEMBLY
	- - - - - -			-	each latch assembly includes:
-44	386-0226-00			1	PLATE, locking
-45	386-0227-00			1	PLATE, index, plastic
-46	214-0604-00			1	SPRING
-47	214-0603-01			1	PIN, securing
-48	378-0787-00			1	AIR DEFLECTOR
	- - - - - -			-	mounting hardware: (not included w/air deflector)
-49	211-0541-00			4	SCREW, 6-32 x 0.25 inch, 100° csk, FHS
-50	210-0457-00			4	NUT, keps, 6-32 x 0.312 inch
-51	380-0221-00			1	HOUSING, wraparound

FIGURE 2 CRT SHIELD & CIRCUIT CARDS

Fig. & Index No.	Tektronix Part No.	Serial/Model No. Eff	Disc	Qty	Description 1 2 3 4 5
2-1	252-0603-00			ft	PLASTIC STRIP, 22 inches long
-2	337-1347-01			1	SHIELD, CRT, face plate
-3	337-1348-01			1	SHIELD, CRT, front
-4	343-0290-00			1	CLAMP HALF, CRT, upper rear
	- - - - - -			-	mounting hardware: (not included w/clamp half)
-5	210-0457-00			2	NUT, keps, 6-32 x 0.312 inch
-6	343-0291-00			1	CLAMP HALF, CRT, lower rear
	- - - - - -			-	mounting hardware: (not included w/clamp half)
	212-0067-00			2	SCREW, 8-32 x 0.375 inch, THS (not shown)
-7	337-0979-01			1	SHIELD, CRT, rear
	- - - - - -			-	mounting hardware: (not included w/shield)
-8	343-0152-00			1	CLAMP, CRT shield
-9	354-0320-00			1	RING, yoke support
-10	348-0132-00			1	LINER, coil, plastic
-11	- - - - - -			1	COIL
-12	352-0255-00			2	HOLDER, CRT, right & left
	- - - - - -			-	mounting hardware for each: (not included w/holder)
-13	212-0020-00			2	SCREW, 8-32 x 1 inch, PHS
-14	210-0458-00			2	NUT, keps, 8-32 x 0.344 inch
-15	348-0262-00			4	PAD, CRT clamping, plastic
-16	213-0252-00			4	SCREW, CRT clamping, 10-32
	- - - - - -			-	mounting hardware for each: (not included w/screw)
-17	220-0596-00			1	NUT, CRT retaining, 10-32 x 0.75 inch diameter
-18	166-0523-00			1	SLEEVE, retaining, 0.377 ID x 0.50 OD x 0.48 inch long
-19	381-0323-00			1	BAR, support, CRT
	- - - - - -			-	mounting hardware: (not included w/bar)
	212-0011-00			2	SCREW, 8-32 x 0.75 inch, 100° csk, FHS (not shown)
	210-0458-00			2	NUT, keps, 8-32 x 0.375 inch (not shown)
-20	346-0082-00			1	STRAP, CRT retaining, lower front
	- - - - - -			-	mounting hardware: (not included w/strap)
-21	211-0541-00			2	SCREW, 6-32 x 0.25 inch, 100° csk, FHS
-22	351-0266-00			1	SLIDE, guide, 11.50 inches long, w/brackets (pair)
	- - - - - -			-	mounting hardware: (not included w/slide)
	212-0040-00			4	SCREW, 8-32 x 0.375 inch, 100° csk, FHS (not shown)
-23	212-0023-00			8	SCREW, 8-32 x 0.375 inch, PHS
-24	210-0804-00			8	WASHER, flat, 0.17 ID x 0.375 inch OD
-25	210-0458-00			8	NUT, keps, 8-32 x 0.344 inch

FIGURE 2 CRT SHIELD & CIRCUIT CARDS (cont)

Fig. & Index No.	Tektronix Part No.	Serial/Model No. Eff	Disc	Qty	Description 1 2 3 4 5
2-26	214-1434-00			1	DEFLECTOR, air
	- - - - - -			-	mounting hardware: (not included w/deflector)
-27	211-0510-00			1	SCREW, 6-32 x 0.375 inch, PHS
-28	210-0457-00			1	NUT, keps, 6-32 x 0.312 inch
-29	200-0293-00			1	COVER,capacitor, 2.562 inch long
-30	- - - - - -			1	CAPACITOR
	- - - - - -			-	mounting hardware: (not included w/capacitor)
-31	211-0516-00			2	SCREW, 6-32 x 0.875 inch, PHS
-32	432-0048-00			1	BASE, capacitor mounting, plastic
-33	386-0254-00			1	PLATE, capacitor mounting, fiber, large
-34	210-0457-00			2	NUT, keps, 6-32 x 0.312 inch
-35	260-1107-00			1	SWITCH, push, snap-in mounting--DPDT
-36	- - - - - -			2	TRANSISTOR
	- - - - - -			-	mounting hardware for each: (not included w/transistor)
-37	213-0104-00			2	SCREW, thread forming, 6-32 x 0.375 inch THS
-38	386-0143-00			1	PLATE, mica, insulating, small
-39	136-0270-00			2	SOCKET, transistor
	- - - - - -			-	mounting hardware for each: (not included w/socket)
-40	213-0088-00			2	SCREW, thread forming, 4-40 x 0.25 inch, PHS
-41	386-1857-00			1	SUPPORT, chassis, main
	- - - - - -			-	mounting hardware: (not included w/support)
	212-0040-00			4	SCREW, 8-32 x 0.375 inch, 100° csk, FHS (not shown)
	210-0458-00			4	NUT, keps, 8-32 x 0.344 inch (not shown)
-42	386-1350-00			2	SUPPORT, CRT, center, right & left
	- - - - - -			-	mounting hardware for each: (not included w/support)
-43	212-0004-00			2	SCREW, 8-32 x 0.312 inch, PHS
-44	351-0182-00			8	GUIDE, circuit card, single, plastic
	- - - - - -			-	mounting hardware for each: (not included w/guide)
-45	211-0109-00			2	SCREW, 4-40 x 7/8 inch, 100° csk, FHS
-46	210-0586-00			2	NUT, keps, 4-40 x 0.25 inch
-47	386-1921-00			1	STIFFENER, chassis, 0.75 x 14.73 inches long
	- - - - - -			-	mounting hardware: (not included w/stiffener)
-48	212-0023-00			5	SCREW, 8-32 x 0.375 inch, PHS
-49	210-0458-00			5	NUT, keps, 8-32 x 0.344 inch

FIGURE 2 CRT SHIELD & CIRCUIT CARDS (cont)

Fig. & Index No.	Tektronix Part No.	Serial/Model No. Eff	Disc	Qty	Description 1 2 3 4 5
2-50	670-0375-00			1	CIRCUIT CARD ASSEMBLY--READ AMP & Z AXIS A6
	- - - - - -			-	circuit card assembly includes:
	388-1724-00			1	CIRCUIT CARD
-51	131-0589-00			2	TERMINAL, pin, 0.50 inch long
-52	136-0183-00			3	SOCKET, transistor, 3 pin
-53	136-0220-00			9	SOCKET, transistor, 3 pin square
-54	136-0235-00			1	SOCKET, transistor, 6 pin
-55	136-0237-00			1	SOCKET, transistor, 8 pin
-56	136-0241-00			1	SOCKET, integrated circuit, 10 pin
-57	136-0269-00			1	SOCKET, integrated circuit, 14 pin
-58	214-0579-00			2	PIN, test point
-59	337-1350-00			1	SHIELD, electrical
-60	367-0090-00			1	GRIP, circuit card
	- - - - - -			-	mounting hardware: (not included w/grip)
-61	213-0082-00			1	SCREW, thread cutting, 4-40 x 0.50 inch, PHS
-62	210-1062-00			1	WASHER, recessed, plastic, 0.125 ID x 0.50 inch OD
-63	386-1849-00			2	SUPPORT, circuit card, right & left
	- - - - - -			-	mounting hardware for each: (not included w/support)
-64	212-0004-00			4	SCREW, 8-32 x 0.312 inch, PHS
-65	361-0235-00			4	RESTRAINT, circuit card
	- - - - - -			-	mounting hardware: (not included w/restraint)
-66	211-0012-00			4	SCREW, 4-40 x 0.375 inch, PHS
-67	210-0586-00			4	NUT, keps, 4-40 x 0.25 inch
-68	670-0374-00			1	CIRCUIT CARD ASSEMBLY--DEFL AMP & DYN FOCUS A5
	- - - - - -			-	circuit card assembly includes:
	388-1723-00			1	CIRCUIT CARD
-69	136-0183-00			2	SOCKET, transistor, 3 pin
-70	136-0220-00			5	SOCKET, transistor, 3 pin, square
-71	136-0237-00			1	SOCKET, transistor, 8 pin
-72	136-0235-00			1	SOCKET, transistor, 6 pin
-73	214-0579-00			1	PIN, test point
-74	260-0723-00			1	SWITCH, slide, 5428
-75	367-0090-00			1	GRIP, circuit card
	- - - - - -			-	mounting hardware: (not included w/grip)
-76	213-0082-00			1	SCREW, thread cutting, 4-40 x 0.50 inch, PHS
-77	210-1062-00			1	WASHER, recessed, plastic, 0.125 ID x 0.50 inch OD

FIGURE 2 CRT SHIELD & CIRCUIT CARDS (cont)

Fig. & Index No.	Tektronix Part No.	Serial/Model No. Eff	Disc	Qty	Description 1 2 3 4 5
2-78	670-0373-00			1	CIRCUIT CARD ASSEMBLY--POWER SUPPLY HV REG A1
	- - - - - -			-	circuit card assembly includes:
	388-1722-00			1	CIRCUIT CARD
-79	136-0183-00			9	SOCKET, transistor, 3 pin
-80	136-0220-00			3	SOCKET, transistor, 3 pin, square
-81	136-0235-00			3	SOCKET, transistor, 6 pin
-82	136-0237-00			1	SOCKET, transistor, 8 pin
-83	214-0579-00			4	PIN, test point
-84	214-0761-00			1	HEAT SINK, transistor
-85	367-0090-00			1	GRIP, circuit card
	- - - - - -			-	mounting hardware: (not included w/grip)
	213-0082-00			1	SCREW, thread cutting, 4-40 x 0.50 inch, PHS
	210-1062-00			1	WASHER, recessed, plastic, 0.125 ID x 0.50 inch OD
-86	670-0372-00			1	CIRCUIT CARD ASSEMBLY--TIMING RAMP A4
	- - - - - -			-	circuit card assembly includes:
	388-1721-00			1	CIRCUIT CARD
-87	136-0183-00			1	SOCKET, transistor, 3 pin
-88	136-0220-00			4	SOCKET, transistor, 3 pin, square
-89	136-0235-00			1	SOCKET, transistor, 6 pin
-90	136-0237-00			4	SOCKET, transistor, 8 pin
-91	136-0269-00			5	SOCKET, integrated circuit, 14 pin
-92	260-0723-00			1	SWITCH, slide
-93	260-0984-00			2	SWITCH, slide
-94	344-0154-00			2	CLIP, electrical, fuse
-95	367-0090-00			1	GRIP, circuit card
	- - - - - -			-	mounting hardware: (not included w/grip)
	213-0082-00			1	SCREW, thread cutting, 4-40 x 0.50 inch, PHS
	210-1062-00			1	WASHER, recessed, plastic, 0.125 ID x 0.50 inch OD
-96	386-1920-00			1	STIFFENER, chassis, 3 x 14 inches long
	- - - - - -			-	mounting hardware: (not included w/stiffener)
-97	212-0070-00			4	SCREW, 8-32 x 0.312 inch, 100° csk, FHS
-98	407-0405-00			1	BRACKET, angle
	- - - - - -			-	mounting hardware: (not included w/bracket)
-99	211-0511-00			4	SCREW, 6-32 x 0.50 inch, PHS
-100	210-0457-00			4	NUT, keps, 6-32 x 0.312 inch
-101	- - - - - -			1	TRANSISTOR
	- - - - - -			-	mounting hardware: (not included w/transistor)
-102	211-0513-00			2	SCREW, 6-32 x 0.625 inch, PHS
-103	386-0978-00			1	PLATE, mica, insulating
-104	136-0135-00			1	SOCKET, transistor
	- - - - - -			-	mounting hardware: (not included w/socket)
-105	213-0113-00			2	SCREW, thread forming, 2-56 x 0.312 inch, PHS
	136-0397-00			1	WIRING HARNESS, CRT
	- - - - - -			-	wiring harness includes:
	200-0801-00			1	COVER
	136-0278-00			1	SOCKET, CRT
	131-0383-00			1	CONNECTOR, anode insulator

FIGURE 3 CHASSIS

Fig. & Index No.	Tektronix Part No.	Serial/Model No. Eff	Disc	Qty	Description 1 2 3 4 5
3-1	333-1350-02			1	PANEL, rear
	- - - - - -			-	mounting hardware: (not included w/panel)
-2	211-0565-00			8	SCREW, 6-32 x 0.25 inch, THS
-3	378-0647-00			1	FILTER, air, plastic foam, 3.125 inch square
-4	426-0666-02			1	FRAME-PANEL, cabinet, rear
-5	386-1848-00			1	PANEL, rear
	- - - - - -			-	mounting hardware: (not included w/panel)
-6	212-0023-00			9	SCREW, 8-32 x 0.375 inch, PHS
-7	119-0215-00			1	FAN ASSEMBLY
	- - - - - -			-	mounting hardware: (not included w/fan assembly)
-8	211-0510-00			4	SCREW, 6-32 x 0.375 inch, PHS
-9	385-0079-00			4	ROD, hex., 6-32 x 0.375 inch long
-10	378-0780-00			1	SCREEN, fan
-11	670-0376-00			1	CIRCUIT BOARD ASSEMBLY-- INPUT SWITCH A7
	- - - - - -			-	circuit board assembly includes:
	388-1725-00			1	CIRCUIT BOARD
-12	131-0589-00			13	TERMINAL, pin, 0.50 inch long
-13	386-1851-00			1	PLATE, connector mounting
	- - - - - -			-	mounting hardware: (not included w/plate)
-14	211-0116-00			4	SCREW, sems, 4-40 x 0.312 inch, PHB
-15	131-0955-00			3	CONNECTOR, receptacle, female, BNC, w/hardware
-16	131-0569-00			2	CONNECTOR, receptacle, 25 pin
	- - - - - -			-	mounting hardware for each: (not included w/connector)
-17	129-0026-00			2	POST, connecting
-18	210-0004-00			2	WASHER, lock, internal, #4
-19	210-0406-00			2	NUT, hex., 4-40 x 0.188 inch
	- - - - - -			-	mounting hardware: (not included w/circuit board assembly)
-20	211-0507-00			4	SCREW, 6-32 x 0.312 inch, PHS
-21	200-1177-00			1	COVER, line voltage selector
	- - - - - -			-	cover includes:
-22	352-0102-00			2	HOLDER, fuse
	- - - - - -			-	mounting hardware for each: (not included w/holder)
-23	213-0088-00			2	SCREW, thread forming, 4-40 x 0.25 inch, PHS
-24	204-0454-00			1	BODY, line voltage selector
	- - - - - -			-	mounting hardware: (not included w/body)
-25	210-0407-00			2	NUT, hex., 6-32 x 0.25 inch
-26	210-0006-00			2	WASHER, lock, internal, #6
-27	361-0170-00			2	SPACER, sleeve, 0.332 inch long

FIGURE 3 CHASSIS (cont)

Fig. & Index No.	Tektronix Part No.	Serial/Model No. Eff	Disc	Qty	Description 1 2 3 4 5
3-28	131-0997-00			1	CONNECTOR, receptacle, male
	- - - - - -			-	mounting hardware: (not included w/connector)
-29	211-0513-00			2	SCREW, 6-32 x 0.625 inch, PHS
-30	361-0100-00			2	SPACER, rod, 0.42 inch long
-31	210-0457-00			2	NUT, keps, 6-32 x 0.312 inch
-32	- - - - - -			2	TRANSISTOR
	- - - - - -			-	mounting hardware for each: (not included w/transistor)
-33	211-0510-00			1	SCREW, 6-32 x 0.375 inch, PHS
-34	386-0978-00			1	INSULATOR, plate, mica
-35	136-0135-00			2	SOCKET, transistor
	- - - - - -			-	mounting hardware for each: (not included w/socket)
-36	213-0113-00			2	SCREW, thread forming, 2-32 x 0.312 inch, RHS
-37	200-0196-01			2	COVER, transistor
	- - - - - -			-	mounting hardware for each: (not included w/cover)
-38	211-0510-00			1	SCREW, 6-32 x 0.375 inch, PHS
-39	407-0831-00			1	BRACKET, angle, transformer
	- - - - - -			-	mounting hardware: (not included w/bracket)
-40	212-0023-00			2	SCREW, 8-32 x 0.375 inch, PHS
-41	210-0458-00			2	NUT, keps, 8-32 x 0.344 inch
-42	- - - - - -			1	TRANSFORMER
	- - - - - -			-	mounting hardware: (not included w/transformer)
-43	212-0553-00			4	SCREW, 10-32 x 1.50 inches, RHS
-44	210-0812-00			4	WASHER, fiber, shouldered, #10
-45	129-0287-00			4	POST, hex., 10-32 x 0.75 inch long
-46	- - - - - -			1	TRANSFORMER
	- - - - - -			-	mounting hardware: (not included w/transformer)
-47	212-0517-00			4	SCREW, 10-32 x 1.75 inches, HHS
-48	210-0812-00			4	WASHER, fiber, shouldered, #10
-49	129-0286-00			4	POST, hex., 10-32 thread one end, 10-32 stud opposite end
-50	407-0832-00			1	BRACKET, capacitor
	- - - - - -			-	mounting hardware: (not included w/bracket)
-51	212-0004-00			1	SCREW, 8-32 x 0.312 inch, PHS
-52	212-0070-00			1	SCREW, 8-32 x 0.312 inch, 100° csk, FHS

FIGURE 3 CHASSIS (cont)

Fig. & Index No.	Tektronix Part No.	Serial/Model No. Eff	Disc	Qty	Description 1 2 3 4 5
3-53	- - - - - -			2	CAPACITOR
	- - - - - -			-	mounting hardware for each: (not included w/capacitor)
-54	211-0516-00			2	SCREW, 6-32 x 0.875 inch, PHS
-55	432-0048-00			1	BASE, capacitor mounting large
-56	386-0254-00			1	RETAINER, capacitor, 2.188 x 1.531 inches
-57	210-0457-00			2	NUT, keps, 6-32 x 0.312 inch
-58	200-0293-00			1	COVER, capacitor, 1.365 ID x 2.562 inches
-59	- - - - - -			1	CAPACITOR
	- - - - - -			-	mounting hardware: (not included w/capacitor)
-60	211-0516-00			2	SCREW, 6-32 x 0.875 inch, PHS
-61	432-0047-00			1	BASE, capacitor mounting, small
-62	386-0252-00			1	RETAINER, capacitor, small
-63	210-0457-00			2	NUT, keps, 6-32 x 0.312 inch
-64	200-0256-00			1	COVER, capacitor, 1 x 2.031 inches long
-65	- - - - - -			4	CAPACITOR
	- - - - - -			-	mounting hardware for each: (not included w/capacitor)
-66	211-0534-00			2	SCREW, sems, 6-32 x 0.312 inch, PHS
-67	386-0252-00			1	RETAINER, capacitor, small
-68	210-0457-00			2	NUT, keps, 6-32 x 0.312 inch
-69	441-0962-00			1	CHASSIS, main
	- - - - - -			-	mounting hardware: (not included w/chassis)
-70	212-0004-00			7	SCREW, 8-32 x 0.312 inch, PHS
	212-0070-00			1	SCREW, 8-32 x 0.312 inch, 100° csk, FHS
-71	- - - - - -			1	RESISTOR, variable
	- - - - - -			-	mounting hardware: (not included w/resistor)
-72	210-0413-00			1	NUT, hex., 0.375-32 x 0.50 inch
-73	210-0840-00			1	WASHER, flat, 0.39 ID x 0.562 inch OD
-74	210-0012-00			1	WASHER, lock, internal, 0.375 ID x 0.50 inch OD
-75	352-0031-00			1	HOLDER, fuse, single
	- - - - - -			-	mounting hardware: (not included w/fuse)
-76	211-0510-00			1	SCREW, 6-32 x 0.375 inch, PHS
-77	210-0457-00			1	NUT, keps, 6-32 x 0.312 inch
-78	348-0064-00			3	GROMMET, plastic, 0.625 inch diameter
-79	348-0055-00			1	GROMMET, plastic, 0.25 inch diameter
-80	124-0242-00			1	STRIP, backing, 8.40 inches long
	- - - - - -			-	mounting hardware: (not included w/strip)
-81	211-0511-00			3	SCREW, 6-32 x 0.50 inch, PHS
	211-0512-00			1	SCREW, 6-32 x 0.50 inch, 100° csk, FHS (not shown)

FIGURE 3 CHASSIS (cont)

Fig. & Index No.	Tektronix Part No.	Serial/Model No. Eff	Disc	Qty	Description 1 2 3 4 5
3-82	- - - - - -			1	THERMO CUTOUT
	- - - - - -			-	mounting hardware: (not included w/thermo cutout)
-83	213-0044-00			2	SCREW, thread forming, 5-32 x 0.188 inch, PHS
-84	131-0292-01			4	CONNECTOR, receptacle, 56 pin
	- - - - - -			-	mounting hardware for each: (not included w/connector)
-85	211-0014-00			2	SCREW, 4-40 x 0.50 inch, PHS
-86	210-0586-00			2	NUT, keps, 4-40 x 0.25 inch
-87	129-0177-00			2	POST, hex., 6-32 x 4.19 inches long
	- - - - - -			-	mounting hardware for each: (not included w/post)
-88	211-0507-00			1	SCREW, 6-32 x 0.312 inch, PHS
	211-0538-00			1	SCREW, 6-32 x 0.312 inch, 100° csk, FHS (not shown)
-89	407-0834-00			1	BRACKET, component, fan motor
	- - - - - -			-	mounting hardware: (not included w/bracket)
-90	212-0004-00			2	SCREW, 8-32 x 0.312 inch, PHS
-91	210-0458-00			2	NUT, keps, 8-32 x 0.344 inch, PHS
-92	147-0031-00			1	MOTOR, AC: 115 V
	- - - - - -			-	mounting hardware: (not included w/motor)
-93	212-0507-00			2	SCREW, 10-32 x 0.375 inch, PHS
-94	212-0562-00			2	SCREW, 10-32 x 0.875 inch, 100° csk, FHS
-95	361-0347-00			2	SPACER, sleeve, 0.219 ID x 0.375 OD x 0.625 inch long
-96	380-0223-00			1	HOUSING HALF, fan, right
	- - - - - -			-	mounting hardware: (not included w/housing half)
-97	211-0530-00			4	SCREW, 6-32 x 1.75 inch, PHS
-98	214-1468-00			1	SCROLL, fan
-99	369-0029-00			1	IMPELLER, fan, axial
	- - - - - -			-	mounting hardware: (not included w/impeller)
-100	213-0234-00			2	SCREW, 3-48 x 0.375 inch, PHS
-101	380-0224-00			1	HOUSING HALF, fan, left
-102	337-1363-00			1	SHIELD, electrical, high voltage box
	- - - - - -			-	mounting hardware: (not included w/shield)
-103	211-0101-00			4	SCREW, 4-40 x 0.25 inch, 100° csk, FHS
-104	407-0836-00			1	BRACKET, component, transistor
	- - - - - -			-	mounting hardware: (not included w/bracket)
-105	211-0008-00			4	SCREW, 4-40 x 0.25 inch, PHS

FIGURE 3 CHASSIS (cont)

Fig. & Index No.	Tektronix Part No.	Serial/Model No. Eff	Disc	Qty	Description 1 2 3 4 5
3-106	- - - - - -			1	TRANSISTOR
	- - - - - -			-	mounting hardware: (not included w/transistor)
-107	211-0510-00			2	SCREW, 6-32 x 0.375 inch, PHS
-108	386-0978-00			1	INSULATOR, plate, mica
-109	136-0135-00			1	SOCKET, transistor
	- - - - - -			-	mounting hardware: (not included w/socket)
-110	213-0113-00			2	SCREW, thread forming, 2-56 x 0.312 inch, RHS
-111	210-0201-00			4	LUG, solder, SE#4
	- - - - - -			-	mounting hardware: (not included w/lug)
-112	213-0044-00			2	SCREW, thread forming, 5-32 x 0.188 inch, PHS
-113	210-0202-00			1	LUG, solder, SE#6
	- - - - - -			-	mounting hardware: (not included w/lug)
-114	211-0507-00			1	SCREW, 6-32 x 0.312 inch, PHS
-115	210-0457-00			1	NUT, keps, 6-32 x 0.312 inch
-116	129-0006-00			1	POST, connector, insulating
	- - - - - -			-	mounting hardware: (not included w/post)
-117	210-0457-00			1	NUT, keps, 6-32 x 0.312 inch
-118	- - - - - -			1	TRANSFORMER
	- - - - - -			-	mounting hardware: (not included w/transformer)
-119	346-0010-00			1	STRAP, mounting
-120	210-0586-00			2	NUT, keps, 4-40 x 0.25 inch
-121	348-0063-00			1	GROMMET, plastic, 0.50 inch diameter
	348-0055-00			1	GROMMET, plastic, 0.25 inch diameter
-122	670-0378-00			1	CIRCUIT BOARD ASSEMBLY--HV2 A2
	- - - - - -			-	circuit board assembly includes:
	388-1727-00			1	CIRCUIT BOARD
	- - - - - -			-	mounting hardware: (not included w/circuit board assembly)
-123	211-0008-00			5	SCREW, 4-40 x 0.25 inch, PHS
-124	129-0143-00			5	POST, plastic, 4-40 x 0.406 inch long
-125	211-0040-00			5	SCREW, plastic, 4-40 x 0.25 inch

FIGURE 3 CHASSIS (cont)

Fig. & Index No.	Tektronix Part No.	Serial/Model No. Eff	Disc	Qty	Description 1 2 3 4 5
3-126	670-0377-00			1	CIRCUIT BOARD ASSEMBLY--HV1 A3
	- - - - - -			-	circuit board assembly includes:
	388-1726-00			1	CIRCUIT BOARD
-127	214-0579-00			1	PIN, test point
	- - - - - -			-	mounting hardware: (not included w/circuit board assembly)
-128	211-0008-00			4	SCREW, 4-40 x 0.25 inch, PHS
-129	129-0143-00			4	POST, plastic, 4-40 x 0.406 inch long
-130	211-0040-00			4	SCREW, plastic, 4-40 x 0.25 inch
-131	337-1349-00			1	SHIELD, high voltage box
	- - - - - -			-	mounting hardware: (not included w/shield)
-132	211-0101-00			2	SCREW, 4-40 x 0.25 inch, 100° csk, FHS
-133	380-0222-00	B010100	B019999	1	HOUSING, wraparound, high voltage box
	337-1387-00	B020000		1	SHIELD, electrical, high voltage, left
	- - - - - -			-	mounting hardware: (not included w/shield)
-134	211-0507-00			5	SCREW, 6-32 x 0.312 inch, PHS
	337-1388-00	B020000		1	SHIELD, electrical, high voltage, right
	- - - - - -			-	mounting hardware: (not included w/shield)
	211-0504-00	XB20000		3	SCREW, 6-32 x 0.25 inch, PHS
-135	200-0745-00			1	COVER, plastic, variable resistor
	179-1558-00			1	WIRING HARNESS, connector
	179-1557-00			1	WIRING HARNESS, chassis
	- - - - - -			-	wiring harness includes:
	131-0621-00			4	CONNECTOR, terminal
	131-0622-00			3	CONNECTOR, terminal
	131-0792-00			3	CONNECTOR, terminal
	352-0198-00			2	HOLDER, terminal connector, 2 wire (black)
	352-0198-02			1	HOLDER, terminal connector, 2 wire (red)
	352-0198-03			1	HOLDER, terminal connector, 2 wire (orange)
	352-0198-06			1	HOLDER, terminal connector, 2 wire (blue)
	179-1559-00			1	WIRING HARNESS, AC
	179-1560-00			1	WIRING HARNESS, HV
	179-1561-00			1	WIRING HARNESS, 40 Volt

FIGURE 4 PROCESSOR ASSEMBLY 640-0492-00

Fig. & Index No.	Tektronix Part No.	Serial/Model No. Eff	Disc	Qty	Description 1 2 3 4 5
4-	640-0492-00			1	PROCESSOR ASSEMBLY
	- - - - - -			-	processor assembly includes:
-1	334-1654-00			1	PLATE, identification
-2	333-1348-00			1	PANEL
	- - - - - -			-	mounting hardware: (not included w/panel)
-3	343-0306-00			1	RETAINER
-4	211-0512-00			2	SCREW, 6-32 x 0.50 inch, 100° csk, FHS
-5	333-1350-01			1	PANEL, front
-6	367-0136-00			2	HANDLE
	- - - - - -			-	mounting hardware for each: (not included w/handle)
	213-0020-00			2	SETSCREW, 6-32 x 0.125 inch, HSS
-7	105-0197-00			2	RELEASE BAR, latch
-8	214-1495-00			2	SPRING, helical compression, 0.65 inch long
-9	214-0666-00			2	PIN, roll, 0.062 inch diameter x 0.187 inch long
-10	105-0196-00			2	CATCH, plug-in latch
	- - - - - -			-	mounting hardware for each: (not included w/catch)
-11	214-1471-00			1	PIN, spring, roll, 0.187 OD x 0.625 inch long
-12	380-0215-00			2	HOUSING, plug-in latch
	- - - - - -			-	mounting hardware for each: (not included w/housing)
-13	212-0040-00			4	SCREW, 8-32 x 0.375 inch, 100° csk, FHS
-14	214-0630-00			2	PIN, roll, 0.062 inch diameter x 0.625 inch long
-15	214-1473-00			2	PIN, spring, roll, 0.156 OD x 0.50 inch long
-16	214-1470-00			2	PIN, spring, roll, 0.125 OD x 0.625 inch long
-17	386-1846-00			1	SUBPANEL, front
-18	351-0285-00			1	SLIDE, guide (pair)
	- - - - - -			-	mounting hardware: (not included w/slide)
-19	212-0507-00			1	SCREW, 10-32 x 0.375 inch, PHS
-20	212-0008-00			1	SCREW, 8-32 x 0.50 inch, PHS
-21	212-0023-00			2	SCREW, 8-32 x 0.375 inch, PHS
-22	210-0458-00			1	NUT, keps, 8-32 x 0.344 inch
-23	386-1852-00			1	SUPPORT, slide, right front
	- - - - - -			-	mounting hardware: (not included w/support)
-24	212-0040-00			2	SCREW, 8-32 x 0.375 inch, 100° csk, FHS
-25	386-1847-00			1	SUPPORT, plug-in guide
	- - - - - -			-	mounting hardware: (not included w/support)
-26	212-0040-00			2	SCREW, 8-32 x 0.375 inch, 100° csk, FHS
-27	407-0819-00			1	BRACKET, angle, cabinet bottom
	- - - - - -			-	mounting hardware: (not included w/bracket)
-28	212-0040-00			4	SCREW, 8-32 x 0.375 inch, 100° csk, FHS
-29	210-0458-00			3	NUT, keps, 8-32 x 0.344 inch
-30	290-0172-00			1	CABINET BOTTOM, plug-in unit
	- - - - - -			-	mounting hardware: (not included w/cabinet bottom)
-31	211-0538-00			8	SCREW, 6-32 x 0.312, 100° csk, FHS

FIGURE 4 PROCESSOR ASSEMBLY 640-0492-00 (cont)

Fig. & Index No.	Tektronix Part No.	Serial/Model No. Eff	Disc	Qty	Description 1 2 3 4 5
4-32	407-0814-00			1	BRACKET, component, load copy switch
	- - - - - -			-	mounting hardware: (not included w/bracket)
-33	212-0008-00			2	SCREW, 6-32 x 0.50 inch, PHS
-34	210-0804-00			2	WASHER, flat, 0.170 ID x 0.375 inch OD
-35	210-0819-00			4	WASHER, fiber, 0.125 ID x 0.50 inch OD
-36	260-0976-00			1	SWITCH, sensitive, dual, w/hardware
-37	129-0006-00			2	POST, connecting, insulated
	- - - - - -			-	mounting hardware for each: (not included w/post)
-38	210-0457-00			1	NUT, keps, 6-32 x 0.312 inch
-39	210-0202-00			2	LUG, solder, SE#6
	- - - - - -			-	mounting hardware for each: (not included w/lug)
-40	211-0504-00			1	SCREW, 6-32 x 0.25 inch, PHS
-41	210-0457-00			1	NUT, keps, 6-32 x 0.312 inch
-42	342-0039-00			1	INSULATOR, plate, 12 inch long
	- - - - - -			-	mounting hardware: (not included w/insulator)
-43	211-0101-00			2	SCREW, 4-40 x 0.25 inch, 100° csk, FHS
-44	348-0051-00			1	GROMMET, rubber, 1.125 inch OD
-45	210-0202-00			1	LUG, solder, SE#6
	- - - - - -			-	mounting hardware: (not included w/lug)
-46	213-0044-00			1	SCREW, thread forming, 5-32 x 0.187 inch, PHS
-47	386-1827-00			1	SUPPORT, plug-in unit, center
-48	200-1141-00			1	COVER, drive pulley
	- - - - - -			-	mounting hardware: (not included w/cover)
-49	211-0538-00			3	SCREW, 6-32 x 0.312 inch, 100° csk, FHS
-50	380-0225-00			1	HOUSING ASSEMBLY, paper cassette
	- - - - - -			-	housing assembly includes:
	212-0010-00			2	SCREW, 8-32 x 0.625 inch, PHS
	- - - - - -			-	mounting hardware: (not included w/housing assembly)
-51	212-0008-00			4	SCREW, 8-32 x 0.50 inch, PHS
-52	210-0804-00			4	WASHER, flat, 0.170 ID x 0.375 inch OD
-53	210-0813-00			4	WASHER, fiber, #10 shouldered
-54	351-0263-00			2	GUIDE, cassette
	- - - - - -			-	mounting hardware for each: (not included w/guide)
-55	212-0001-00			1	SCREW, 8-32 x 0.25 inch, PHS
-56	214-1445-00			2	SPRING, latch, paper cover
	- - - - - -			-	mounting hardware for each: (not included w/spring)
-57	212-0001-00			2	SCREW, 8-32 x 0.25 inch, PHS
	210-0804-00			2	WASHER, flat, 0.170 ID x 0.375 inch OD

FIGURE 4 PROCESSOR ASSEMBLY 640-0492-00 (cont)

Fig. & Index No.	Tektronix Part No.	Serial/Model No. Eff	Disc	Qty	Description 1 2 3 4 5
4-58	214-1427-00			1	ARM, cassette guide, left
	- - - - - -			-	mounting hardware: (not included w/arm)
-59	211-0008-00			1	SCREW, 8-32 x 0.50 inch, PHS
-60	361-0344-00			1	SPACER, sleeve, 0.12 ID x 0.182 OD x 0.094 inch long
-61	214-1426-00			1	ARM, cassette guide, right
	- - - - - -			-	mounting hardware: (not included w/arm)
-62	211-0008-00			1	SCREW, 8-32 x 0.50 inch, PHS
-63	361-0344-00			1	SPACER, sleeve, 0.12 ID x 0.182 OD x 0.094 inch long
-64	386-1842-00			1	SUPPORT, cassette guide
	- - - - - -			-	mounting hardware: (not included w/support)
-65	211-0101-00			4	SCREW, 4-40 x 0.25 inch, 100° csk, FHS
-66	214-1452-00			1	ROLLER, paper guide
	- - - - - -			-	mounting hardware: (not included w/roller)
-67	401-0086-00			2	BEARING, sleeve
-68	006-1603-00			1	PAPER CASSETTE
-69	200-1145-00			1	COVER, cassette, plastic
-70	386-1838-00			2	PLATE, backing, latch pin
	- - - - - -			-	mounting hardware for each: (not included w/plate)
-71	211-0531-00			2	SCREW, 6-32 x 0.375 inch, FIL HS
-72	214-1446-00			2	PIN, latch
	- - - - - -			-	mounting hardware for each: (not included w/pin)
-73	213-0088-00			1	SCREW, thread forming, #4 x 0.25 inch, PHS
-74	210-0994-00			1	WASHER, flat, 0.125 ID x 0.25 inch OD
-75	131-0382-00			2	CONNECTOR, stand off, insulated
-76	- - - - - -			1	THERMO SWITCH
	- - - - - -			-	mounting hardware: (not included w/thermo switch)
-77	211-0007-00			2	SCREW, 4-40 x 0.188 inch, PHS
-78	214-1425-00			1	HEAT SINK
	- - - - - -			-	mounting hardware: (not included w/heat sink)
-79	211-0513-00			8	SCREW, 6-32 x 0.625 inch, PHS
-80	210-0803-00			8	WASHER, flat, 0.150 ID x 0.375 inch OD
-81	210-0813-00			8	WASHER, fiber, #10 shouldered
-82	200-1142-00			1	COVER, heat sink
	- - - - - -			-	mounting hardware: (not included w/cover)
-83	211-0101-00			4	SCREW, 4-40 x 0.25 inch, 100° csk, FHS

FIGURE 5 PROCESSOR ASSEMBLY 640-0492-00 (cont)

Fig. & Index No.	Tektronix Part No.	Serial/Model No. Eff	Disc	Qty	Description 1 2 3 4 5
5-	640-0492-00			1	PROCESSOR ASSEMBLY (cont.)
	- - - - - -			-	processor assembly includes:
-1	119-0215-01			1	FAN, axial
	- - - - - -			-	mounting hardware: (not included w/fan)
-2	211-0538-00			2	SCREW, 6-32 x 0.312 inch, 100° csk, FHS
-3	210-0457-00			2	NUT, keps, 6-32 x 0.312 inch
-4	352-0252-00			1	HOLDER, vapor hose
	- - - - - -			-	mounting hardware: (not included w/holder)
-5	211-0510-00			2	SCREW, 6-32 x 0.375 inch, PHS
-6	210-0457-00			2	NUT, keps, 6-32 x 0.312 inch
-7	407-0816-00			1	BRACKET, component, fan
	- - - - - -			-	mounting hardware: (not included w/bracket)
-8	211-0507-00			1	SCREW, 6-32 x 0.312 inch, PHS
-9	210-0803-00			1	WASHER, flat, 0.150 ID x 0.375 inch OD
-10	211-0538-00			1	SCREW, 6-32 x 0.312 inch, 100° csk, FHS
-11	381-0319-00			1	BAR, support, motor
	- - - - - -			-	mounting hardware: (not included w/bar)
	212-0008-00			1	SCREW, 8-32 x 0.50 inch, PHS
	210-0804-00			1	WASHER, flat, 0.170 ID x 0.375 inch OD
	210-0813-00			1	WASHER, fiber, #10 shouldered
	212-0040-00			1	SCREW, 8-32 x 0.375 inch, 100° csk, FHS
-12	407-0825-00			1	BRACKET, component, motor drive, lower
	- - - - - -			-	mounting hardware: (not included w/bracket)
-13	211-0507-00			2	SCREW, 6-32 x 0.312 inch, PHS
-14	407-0826-00			1	BRACKET, component, motor drive, upper
	- - - - - -			-	mounting hardware: (not included w/bracket)
-15	211-0507-00			2	SCREW, 6-32 x 0.312 inch, PHS
-16	147-0032-00			1	MOTOR, AC
	- - - - - -			-	mounting hardware: (not included w/motor)
-17	212-0507-00			4	SCREW, 10-32 x 0.375 inch, PHS
-18	407-0818-00			1	BRACKET, component, motor to gear assembly
	- - - - - -			-	mounting hardware: (not included w/bracket)
-19	211-0507-00			4	SCREW,6-32 x 0.312 inch, PHS
-20	129-0283-00			4	POST, metallic, 0.312 OD x 1.8 inch long
-21	129-0006-00			1	POST, connecting, insulated
	- - - - - -			-	mounting hardware for each: (not included w/contact)
-22	210-0457-00			1	NUT, keps, 6-32 x 0.312 inch
-23	407-0270-00			2	BRACKET, capacitor
	- - - - - -			-	mounting hardware for each: (not included w/bracket)
-24	212-0023-00			1	SCREW, 8-32 x 0.375 inch, PHS

FIGURE 5 PROCESSOR ASSEMBLY 640-0492-00 (cont)

Fig. & Index No.	Tektronix Part No.	Serial/Model No. Eff	Disc	Qty	Description 1 2 3 4 5
5-25	401-0103-00			1	GEAR ASSEMBLY
	- - - - - -			-	mounting hardware: (not included w/gear assembly)
-26	166-0030-00			4	TUBE, spacer, 0.180 ID x 0.25 OD x 0.188 inch long
-27	211-0538-00			1	SCREW, 6-32 x 0.312 inch, 100° csk, FHS
-28	211-0530-00			3	SCREW, 6-32 x 1.750 inch, PHS
-29	376-0110-00			1	COUPLER BLOCK
	- - - - - -			-	mounting hardware: (not included w/coupler block)
	213-0020-00			1	SETSCREW, 6-32 x 0.125 inch, HSS
-30	214-0666-00			2	PIN, 0.062 diameter x 0.187 inch long
-31	367-0144-00			2	PIVOT ARM, detent
-32	214-0274-00			2	BALL, 0.125 inch diameter
-33	214-1505-00			1	SPRING, detent
	- - - - - -			-	mounting hardware: (not included w/spring)
-34	211-0007-00			2	SCREW, 4-40 x 0.188 inch, PHS
-35	376-0109-00			1	COUPLER BLOCK
	- - - - - -			-	mounting hardware: (not included w/coupler block)
	213-0006-00			1	SETSCREW, 8-32 x 0.188 inch, HSS
-36	214-1456-00			2	PIN, spring, 0.094 ID x 0.625 inch long
-37	166-0525-00			ft	PLASTIC TUBING, 32 inches
-38	352-0254-00			2	HOLDER, vent hose
	- - - - - -			-	mounting hardware for each: (not included w/holder)
-39	212-0040-00			1	SCREW, 8-32 x 0.375 inch, 100° csk, FHS
-40	200-1140-00			1	COVER, heat control
	- - - - - -			-	mounting hardware: (not included w/cover)
-41	211-0504-00			3	SCREW, 6-32 x 0.25 inch, PHS
-42	214-1447-00			1	ARM, heater tension, left
-43	212-0520-01			2	SCREW, 10-32 x 1.25 inch, HHS
-44	210-0410-00			2	NUT, hex., 10-32 x 0.312 inch
-45	210-0994-00			2	WASHER, flat, 0.125 ID x 0.25 inch OD
-46	214-0966-00			2	SPRING, helical, compression, 0.48 inch long
-47	386-1840-00			2	SUPPORT, tension adjusting screw
	- - - - - -			-	mounting hardware for each: (not included w/support)
-48	211-0504-00			1	SCREW, 6-32 x 0.25 inch, PHS
-49	210-0803-00			1	WASHER, flat, 0.150 ID x 0.375 inch OD
-50	214-1438-00			1	ARM, heater tension, right
-51	426-0671-00			1	FRAME SECTION, left
	- - - - - -			-	mounting hardware: (not included w/frame section)
	212-0023-00			1	SCREW, 8-32 x 0.375 inch, PHS
	212-0040-00			1	SCREW, 8-32 x 0.375 inch, 100° csk, FHS
-52	386-1828-01			1	SUPPORT, paper exit guide

FIGURE 5 PROCESSOR ASSEMBLY 640-0492-00 (cont)

Fig. & Index No.	Tektronix Part No.	Serial/Model No. Eff	Disc	Qty	Description 1 2 3 4 5
5-53	214-1429-00			1	SPRING, flat, paper stripper
	- - - - - -			-	mounting hardware: (not included w/spring)
-54	211-0008-00			2	SCREW, 4-40 x 0.25 inch, PHS
-55	210-0586-00			2	NUT, keps, 4-40 x 0.25 inch
-56	351-0262-00			1	GUIDE, paper exit
	- - - - - -			-	mounting hardware: (not included w/guide)
-57	211-0038-00			5	SCREW, 4-40 x 0.312 inch, 100° csk, FHS
-58	210-0004-00			5	WASHER, lock, internal #4
-59	210-0406-00			5	NUT, hex., 4-40 x 0.188 inch
-60	105-0203-00			1	DRUM, paper drive
	- - - - - -			-	mounting hardware: (not included w/drum)
-61	358-0418-00			1	BUSHING, sleeve
-62	384-1036-00			1	SHAFT, extension
-63	401-0096-00			1	BEARING
-64	214-1476-00			1	SPRING, helical compression, 1.10 inch long
-65	342-0075-00			2	INSULATOR, washer 0.62 ID x 3.455 inch OD
-66	354-0402-00			1	RING, retaining
-67	351-0264-00			1	GUIDE, vapor, lower
	- - - - - -			-	mounting hardware: (not included w/guide)
-68	212-0023-00			2	SCREW, 8-32 x 0.375 inch, PHS
	210-0804-00			2	WASHER, flat, 0.070 ID x 0.375 inch OD
	407-0877-00			2	BRACKET, angle
-69	214-1439-00			2	PIN, hinge
	- - - - - -			-	mounting hardware for each: (not included w/pin)
-70	354-0393-00			2	RING, retaining
-71	342-0046-00			1	INSULATOR, heater
-72	119-0241-00			1	HEATER, paper
	- - - - - -			-	mounting hardware: (not included w/heater)
-73	384-0787-00			2	ROD, insulator
-74	343-0294-00			3	RETAINER
-75	384-0785-00			1	ROD, temperature sensitive
	- - - - - -			-	mounting hardware: (not included w/rod)
-76	210-0801-00			1	WASHER, flat, 140 ID x 0.281 inch OD
-77	214-1512-00			1	SPRING, flat
-78	211-0504-00			1	SCREW, 6-32 x 0.25 inch, PHS
-79	211-0510-00			1	SCREW, 6-32 x 0.375 inch, PHS
-80	210-0407-00			1	NUT, hex., 6-32 x 0.25 inch
-81	214-1449-00			1	ACTUATOR, switch
	- - - - - -			-	mounting hardware: (not included w/actuator)
-82	214-1428-00			1	PIN, hinge
-83	354-0292-00			2	RING, retaining

FIGURE 5 PROCESSOR ASSEMBLY 640-0492-00 (cont)

Fig. & Index No.	Tektronix Part No.	Serial/Model No. Eff	Disc	Qty	Description 1 2 3 4 5
5-84	407-0817-00			1	BRACKET, component, temperature control
	- - - - - -			-	mounting hardware: (not included w/bracket)
-85	211-0544-00			1	SCREW, 6-32 x 0.75 inch, PHS
-86	211-0513-00			1	SCREW, 6-32 x 0.625 inch, PHS
-87	210-0803-00			1	WASHER, flat, 0.150 ID x 0.375 inch OD
-88	210-0813-00			2	WASHER, flat, 0.150 ID x 0.375 inch OD
-89	342-0048-00			1	INSULATOR, block
-90	260-1180-00			1	SWITCH, sensitive
	- - - - - -			-	mounting hardware: (not included w/switch)
-91	211-0516-00			2	SCREW, 6-32 x 0.875 inch, PHS
-92	210-0457-00			2	NUT, keps, 6-32 x 0.312 inch
-93	260-1181-00			1	SWITCH, sensitive
	- - - - - -			-	mounting hardware: (not included w/switch)
-94	211-0516-00			2	SCREW, 6-32 x 0.875 inch, PHS
-95	210-0457-00			2	NUT, keps, 6-32 x 0.312 inch
-96	401-0085-00			2	BEARING, sleeve
-97	354-0299-00			2	RING, retaining
-98	426-0670-00			1	FRAME SECTION, right
	- - - - - -			-	mounting hardware: (not included w/frame section)
	212-0023-00			1	SCREW, 8-32 x 0.375 inch, PHS
	212-0040-00			1	SCREW, 8-32 x 0.375 inch, 100° csk, FHS
-99	342-0041-00			2	INSULATOR PAD
-100	210-0860-00			8	WASHER, fiber, 0.172 ID x 0.438 inch OD
-101	210-0202-00			1	LUG, solder, SE #6
	- - - - - -			-	mounting hardware: (not included w/lug)
-102	213-0044-00			1	SCREW, thread forming, 5-32 x 0.187 inch, PHS
-103	401-0094-01			1	SPROCKET WHEEL, 32 tooth
	- - - - - -			-	mounting hardware: (not included w/sprocket wheel)
	213-0006-00			1	SETSCREW, 8-32 x 0.188 inch, HSS
-104	214-1481-00			1	BELT, positive drive
-105	401-0087-00			2	ROLLER, belt tension
	- - - - - -			-	mounting hardware for each: (not included w/roller)
-106	211-0008-00			1	SCREW, 4-40 x 0.25 inch, PHS
-107	384-0781-00			1	SHAFT, belt tension
-108	401-0097-02			1	SPROCKET WHEEL, 11 tooth
	- - - - - -			-	mounting hardware: (not included w/sprocket wheel)
	213-0006-00			1	SETSCREW, 8-32 x 0.188 inch, HSS
-109	401-0093-01			1	SPROCKET WHEEL, 38 tooth
	- - - - - -			-	mounting hardware: (not included w/sprocket wheel)
-110	213-0006-00			1	SETSCREW, 8-32 x 0.188 inch, HSS
-111	214-1457-00			1	BELT, positive drive

FIGURE 5 PROCESSOR ASSEMBLY 640-0492-00 (cont)

Fig. & Index No.	Tektronix Part No.	Serial/Model No. Eff	Disc	Qty	Description 1 2 3 4 5
5-112	401-0097-01			1	SPROCKET WHEEL, 11 tooth
	- - - - - -			-	mounting hardware: (not included w/sprocket wheel)
-113	213-0006-00			1	SETSCREW, 8-32 x 0.188 inch, HSS
-114	407-0824-00			1	BRACKET, belt tension
	- - - - - -			-	mounting hardware: (not included w/bracket)
-115	211-0545-00			1	SCREW, 6-32 x 1.25 inch, THS
-116	211-0514-00			1	SCREW, 6-32 x 0.75 inch, PHS
-117	210-0803-00			1	WASHER, flat, 0.150 ID x 0.375 inch OD
-118	361-0341-00			1	SPACER
-119	352-0253-00			1	HOLDER, belt tension roller
	- - - - - -			-	mounting hardware: (not included w/holder)
-120	212-0001-00			1	SCREW, 8-32 x 0.25 inch, PHS
-121	210-0804-00			1	WASHER, flat, 0.170 ID x 0.375 inch OD
-122	119-0254-00			1	SOLENOID, w/hardware
-123	407-0815-00			1	BRACKET, component, solenoid
	- - - - - -			-	mounting hardware: (not included w/bracket)
-124	211-0008-00			2	SCREW, 4-40 x 0.25 inch, PHS
-125	214-1475-00			1	SPRING, helical compression, 0.75 inch long
-126	105-0200-00			1	RELEASE, coupler half
-127	214-1495-00			1	SPRING, helical, 0.650 inch long
-128	343-0295-00			1	RETAINER, spring, rocker
-129	376-0111-00			1	COUPLER HALF, rocker
	- - - - - -			-	mounting hardware: (not included w/coupler half)
-130	214-0564-00			1	PIN, roll, 0.125 diameter x 0.25 inch long
-131	376-0112-00			1	COUPLER HALF, toothed
	- - - - - -			-	mounting hardware: (not included w/coupler-half)
-132	211-0038-00			3	SCREW, 4-40 x 0.312 inch, 100° csk, FHS
-133	401-0088-00			1	FLANGE
-134	401-0092-00			1	SPROCKET WHEEL, 14 tooth
-135	401-0088-00			1	FLANGE
	- - - - - -			-	mounting hardware: (not included w/flange)
-136	211-0101-00			3	SCREW, 4-40 x 0.25 inch, 100° csk, FHS
-137	343-0289-00			1	HOLD-DOWN
	- - - - - -			-	mounting hardware: (not included w/hold-down)
-138	211-0012-00			2	SCREW, 4-40 x 0.375 inch, PHS
-139	407-0823-00			1	BRACKET, cancelling roller
	- - - - - -			-	mounting hardware: (not included w/bracket)
-140	212-0081-00			2	SCREW, 8-32 x 1 inch, 100° csk, FHS
-141	361-0342-00			2	SPACER, sleeve
-142	212-0564-00			1	SCREW, 10-32 x 0.25 inch, CAP H soc
-143	214-1443-00			1	ACTUATOR-ROLLER

FIGURE 5 PROCESSOR ASSEMBLY 640-0492-00 (cont)

Fig. & Index No.	Tektronix Part No.	Serial/Model No. Eff	Disc	Qty	Description 1 2 3 4 5
5-144	401-0090-00			1	BEARING, sleeve
-145	211-0012-00			3	SCREW, 4-40 x 0.25 inch, 100° csk, FHS
-146	214-1448-00			3	SPRING, flat, cutter blade
-147	361-0345-00			3	SPACER, sleeve
-148	386-1841-00			1	PLATE, backing, lower cutter blade
-149	214-1442-00			1	BLADE, paper cutter
-150	351-0268-00			1	GUIDE, paper
	- - - - - -			-	mounting hardware: (not included w/guide)
-151	211-0504-00			4	SCREW, 6-32 x 0.25 inch, PHS
-152	214-1450-01			1	ROLLER, paper drive
-;53	401-0095-00			2	BEARING BLOCK, guide roller
	- - - - - -			-	mounting hardware for each:
-154	211-0062-00			1	SCREW, 2-56 x 0.312 inch RHS
-155	384-0786-00			2	SHAFT, pinch roller
	- - - - - -			-	mounting hardware for each: (not included w/shaft)
-156	354-0165-00			1	RING, retaining
-157	381-0320-00			1	BAR, support, upper paper guide
	- - - - - -			-	mounting hardware:
-158	211-0541-00			2	SCREW, 6-32 x 0.25 inch, 100° csk, FHS
-159	214-1454-00			1	SPRING, paper guide
	- - - - - -			-	mounting hardware: (not included w/spring)
-160	407-0829-00			1	BRACKET, stiffening
-161	211-0504-00			3	SCREW, 6-32 x 0.25 inch, PHS
-162	214-1441-00			1	BLADE, paper cutter, upper
	- - - - - -			-	mounting hardware: (not included w/blade)
-163	214-1480-00			2	PIN, dowel
-164	214-1451-00			1	ROLLER, paper drive, upper
-165	342-0040-00			2	INSULATOR, plate
-166	358-0419-00			2	BUSHING, sleeve
-167	354-0184-00			1	RING, retaining
-168	426-0669-01			1	FRAME SECTION, roller-cutter
-169	384-1026-00			2	SHAFT, extension, lower pinch roller
	- - - - - -			-	mounting hardware for each: (not included w/shaft)
-170	354-0184-00			2	RING, retaining
-171	354-0177-00			1	RING, retaining
-172	214-1455-00			4	SPRING, flat, paper guide
	- - - - - -			-	mounting hardware for each: (not included w/spring)
-173	211-0008-00			1	SCREW, 4-40 x 0.25 inch, PHS
-174	214-1424-00			2	ACTUATOR, pinch rollers
-175	213-0020-00			2	SETSCREW, 6-32 x 0.125 inch HSS

FIGURE 5 PROCESSOR ASSEMBLY 640-0492-00 (cont)

Fig. & Index No.	Tektronix Part No.	Serial/Model No. Eff	Disc	Qty	Description 1 2 3 4 5
5-176	384-0784-00			1	ROD, cutter blade, left
	- - - - - -			-	mounting hardware: (not included w/rod)
-177	214-1479-00			1	PIN, dowel
-178	354-0392-00			2	RING, retaining
-179	214-1453-00			2	ROLLER, spacing
-180	384-0783-00			1	ROD, cutter blade, right
	- - - - - -			-	mounting hardware: (not included w/rod)
-181	214-1479-00			1	PIN, dowel
-182	354-0392-00			2	RING, retaining
-183	214-1453-00			2	ROLLER, spacing
-184	384-0782-00			2	ROD, connector, paper cutter
	- - - - - -			-	mounting hardware for each: (not included w/rod)
-185	401-0089-00			1	BEARING
-186	214-1480-00			1	PIN, dowel
-187	343-0288-00			1	RETAINER
-188	213-0088-00			1	SCREW, thread forming, #4 x 0.25 inch, PHS
-189	384-0781-00			1	SHAFT
-190	214-1423-00			1	ACTUATOR, switch
	- - - - - -			-	mounting hardware: (not included w/actuator)
	213-0004-00			1	SETSCREW, 6-32 x 0.188 inch HSS
-191	354-0397-00			1	RING, retaining
-192	390-0171-00			1	CABINET TOP
-193	211-0025-00			1	SCREW, 4-40 x 0.375 inch, 100° csk, FHS
-194	210-0586-00			1	NUT, keps, 4-40 x 0.25 inch
-195	351-0269-00			1	GUIDE, paper
	- - - - - -			-	mounting hardware: (not included w/guide)
-196	211-0538-00			2	SCREW, 6-32 x 0.312 inch, 100° csk, FHS
-197	210-0478-00			2	NUT, hex., 0.312 x 0.656 inch long
-198	351-0265-00			1	GUIDE, vapor, upper
	- - - - - -			-	mounting hardware: (not included w/guide)
-199	211-0008-00			2	SCREW, 4-40 x 0.25 inch, PHS
-200	210-0586-00			2	NUT, keps, 4-40 x 0.25 inch
	179-1562-00			1	WIRING HARNESS (not shown)
	- - - - - -			-	wiring harness includes:
	131-0922-00			8	CONTACT, electrical
	131-0690-00			1	CONNECTOR, receptacle, 15 pin, male (not shown)
	- - - - - -			-	mounting hardware: (not included w/connector)
	211-0531-00			2	SCREW, 6-32 x 0.375 inch, FIL HS
	200-1159-00			1	COVER, connector (not shown)
	- - - - - -			-	mounting hardware: (not included w/cover)
	211-0012-00			2	SCREW, 4-40 x 0.375 inch, PHS

FIG. 5 PROCESSOR ASSEMBLY 640-0492-00 (cont)

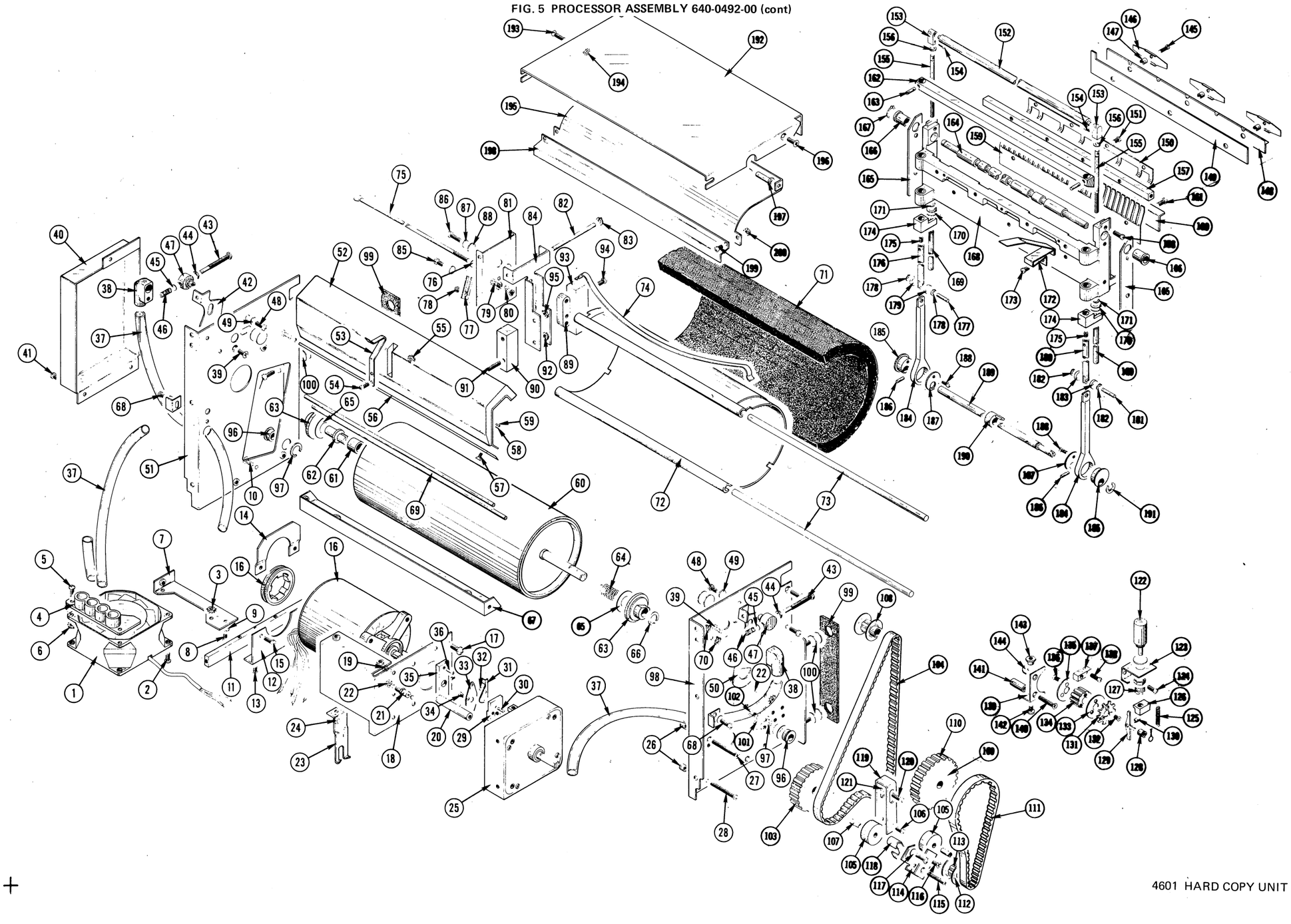

FIG. 1 FRONT & FRAME

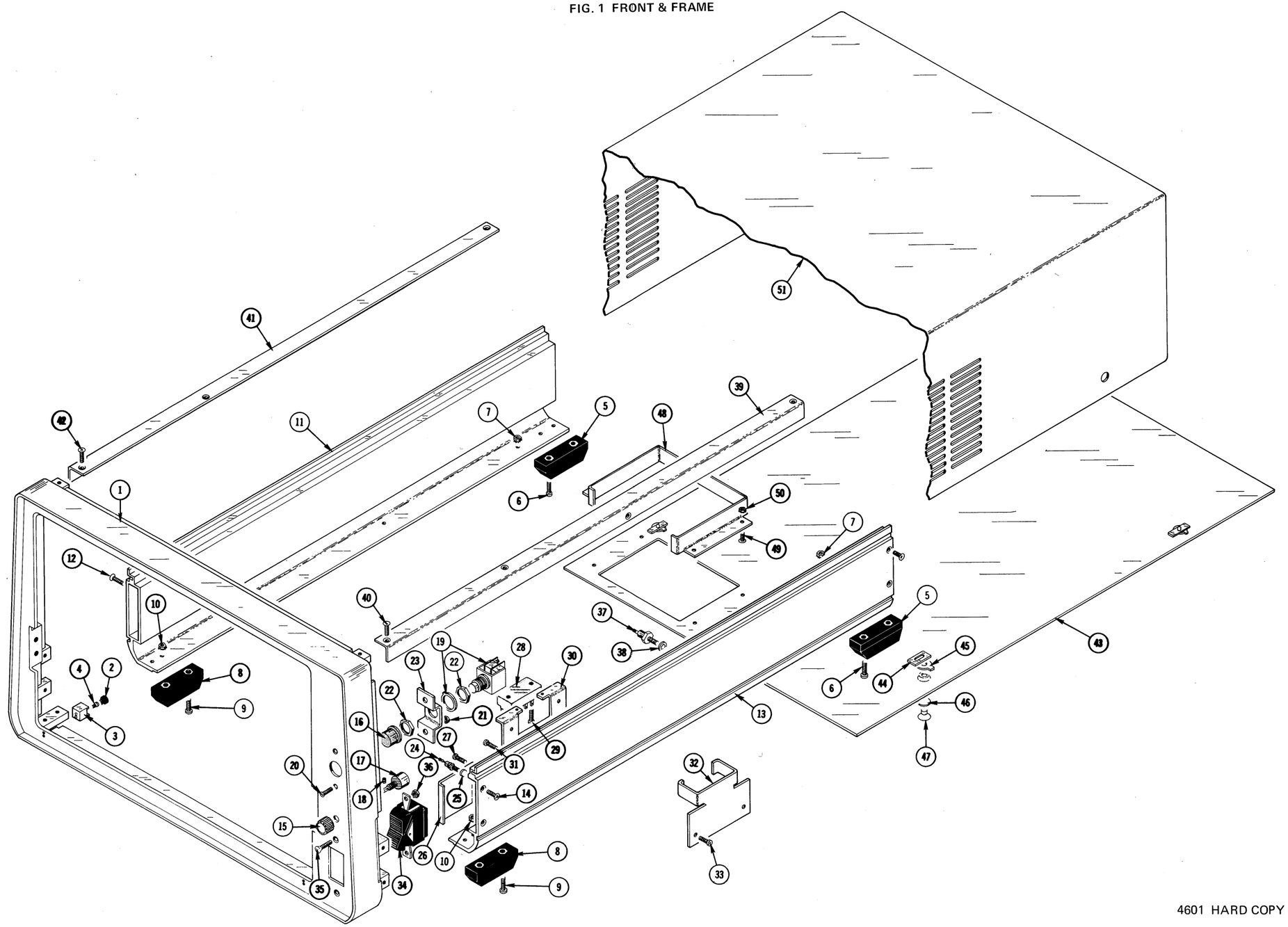

4601 HARD COPY UNIT

FIGURE 1 FRONT & FRAME

FIG. 2 CRT SHIELD & CIRCUIT CARDS

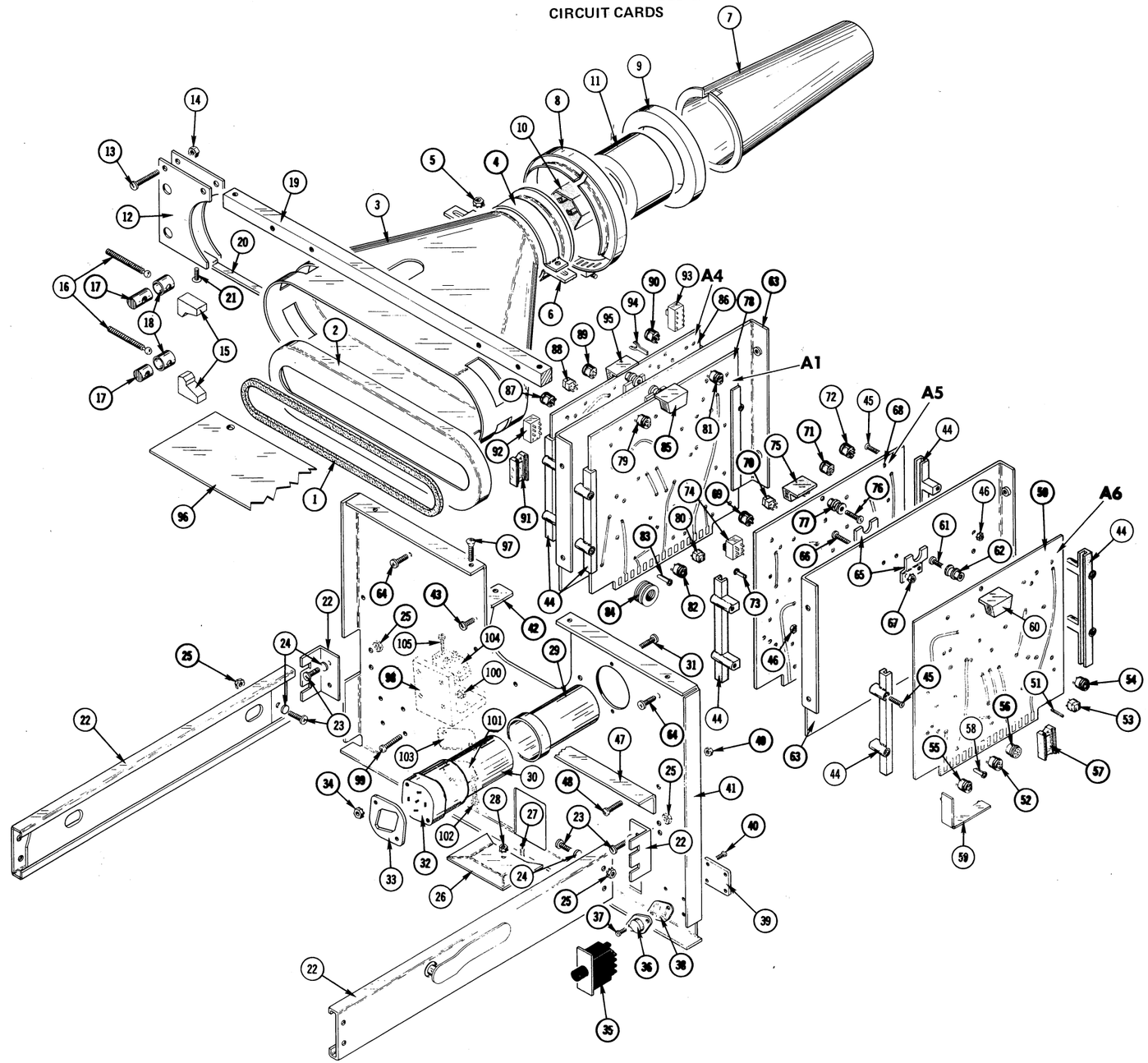

4601 HARD COPY UNIT

FIG 2 CRT + CIRCUIT CARDS

FIG. 3 CHASSIS

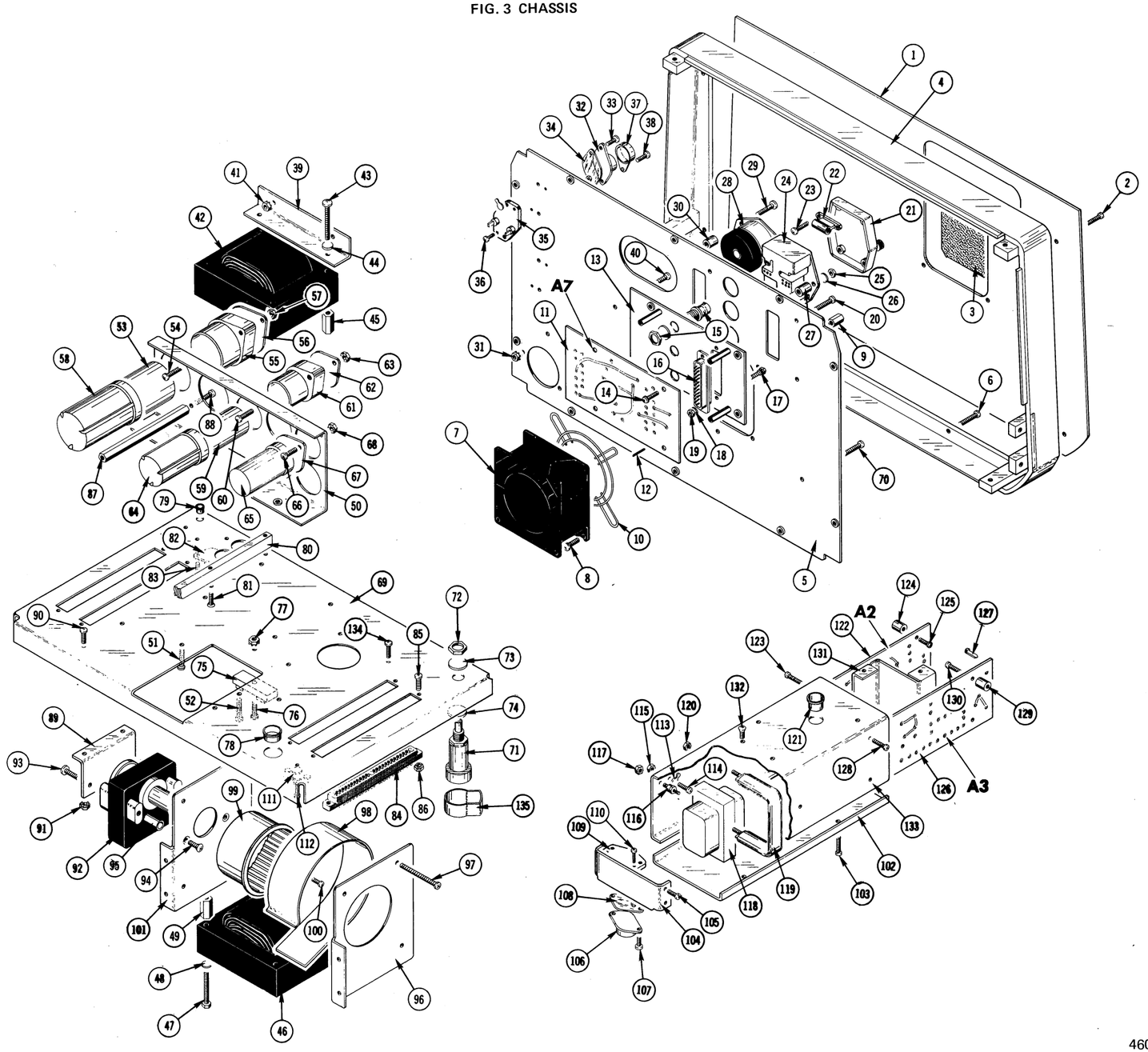

FIG. 4 PROCESSOR ASSEMBLY 640-0492-00

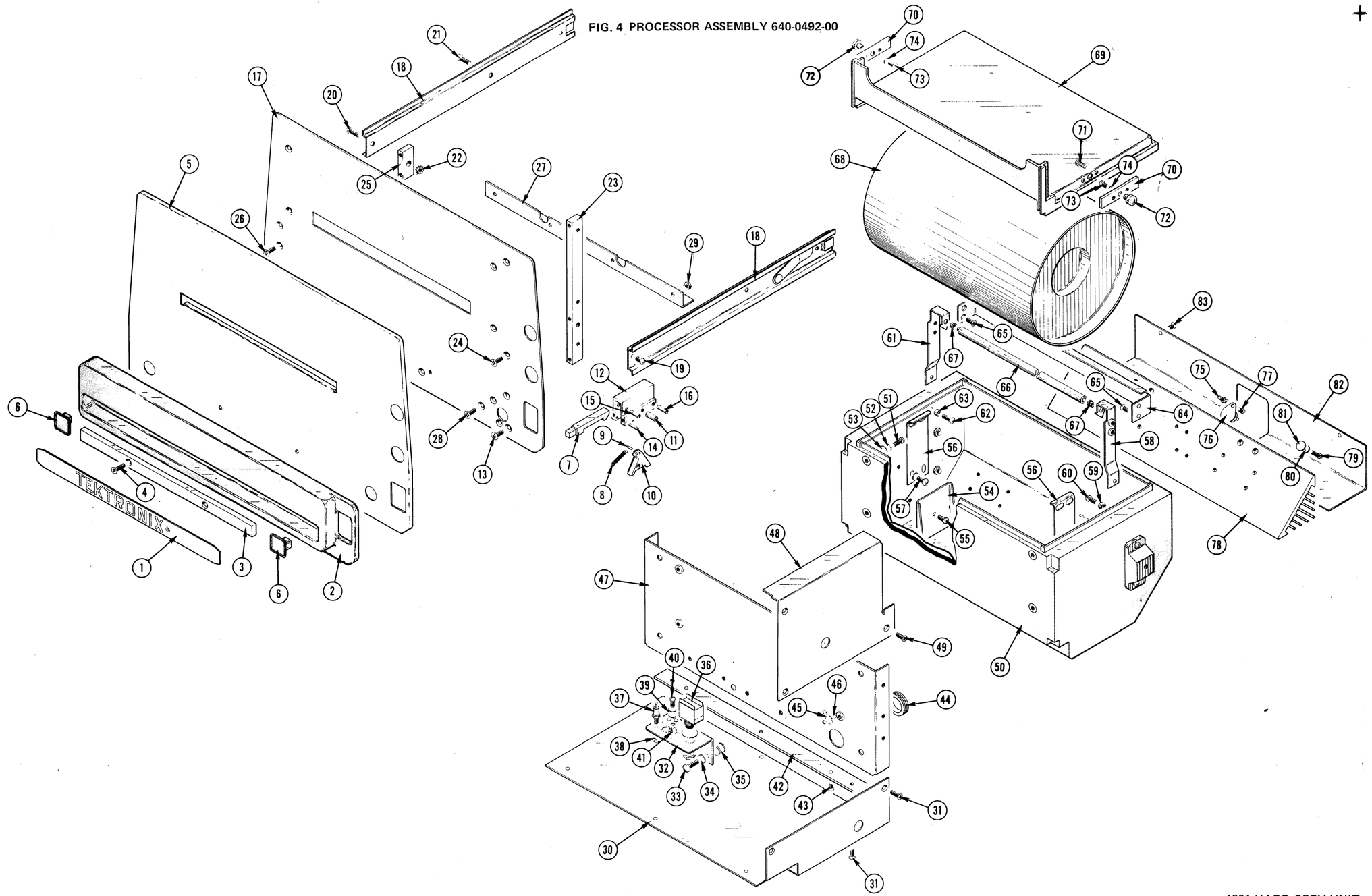

4601 HARD COPY UNIT

STANDARD ACCESSORIES

FIG. 6 STANDARD ACCESSORIES & REPACKAGING

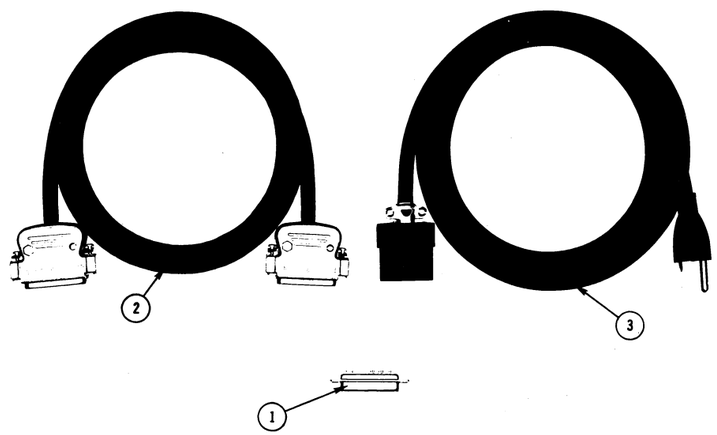

CARTON ASSEMBLY
(Part No. 065-0147-00)

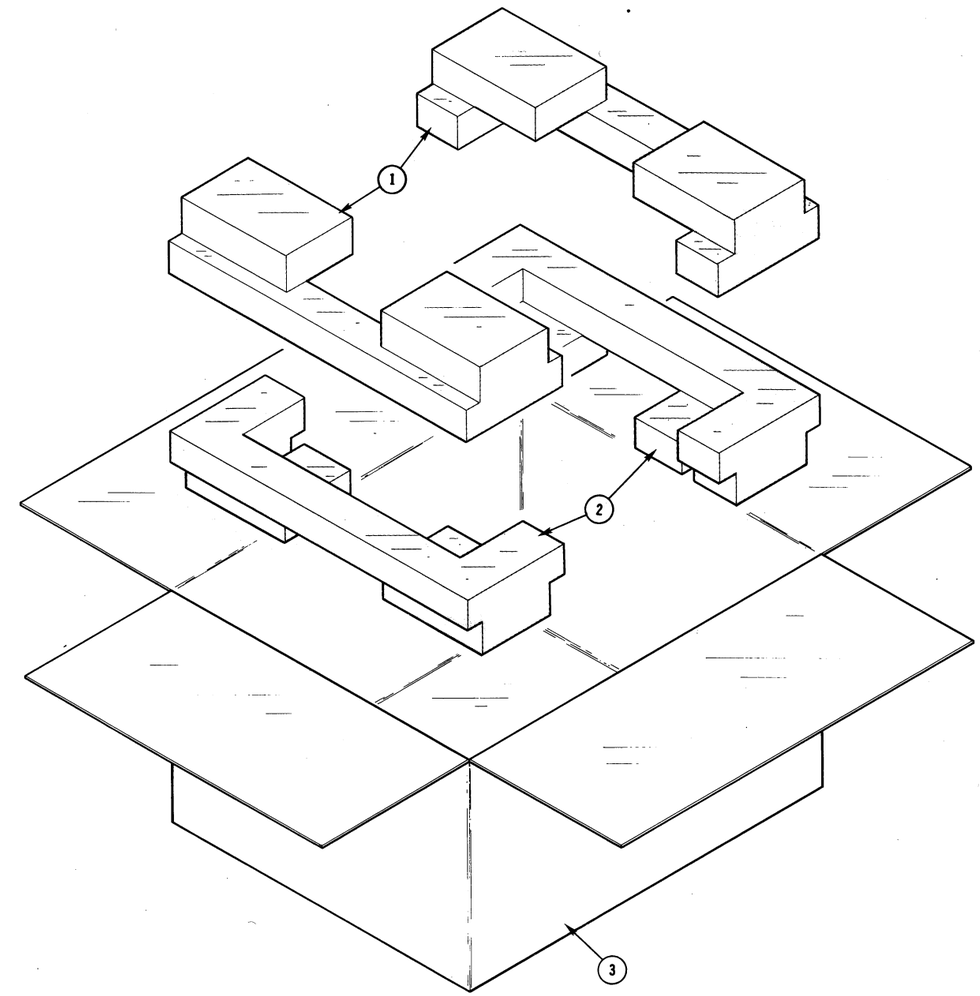

Fig. & Index No.	Tektronix Part No.	Serial/Model No. Eff	Disc	Qty	1 2 3 4 5 Description
6-1	131-0570-00			1	CONNECTOR, receptacle, 25 pin, male
-2	012-0258-00			2	CABLE INTERCONNECTING, 6 feet
-3	161-0065-01			1	CABLE ASSEMBLY, power, 8 feet
	070-1069-00			1	MANUAL, instruction *(not shown)*

Fig. & Index No.	Tektronix Part No.	Serial/Model No. Eff	Disc	Qty	1 2 3 4 5 Description
6-	065-0147-00			1	CARTON ASSEMBLY
	- - - - - -			-	carton assembly includes:
-1	004-0261-00			1	ETHA-FRAME, top
-2	004-0262-00			1	ETHA-FRAME, bottom
-3	004-0776-00			1	CARTON

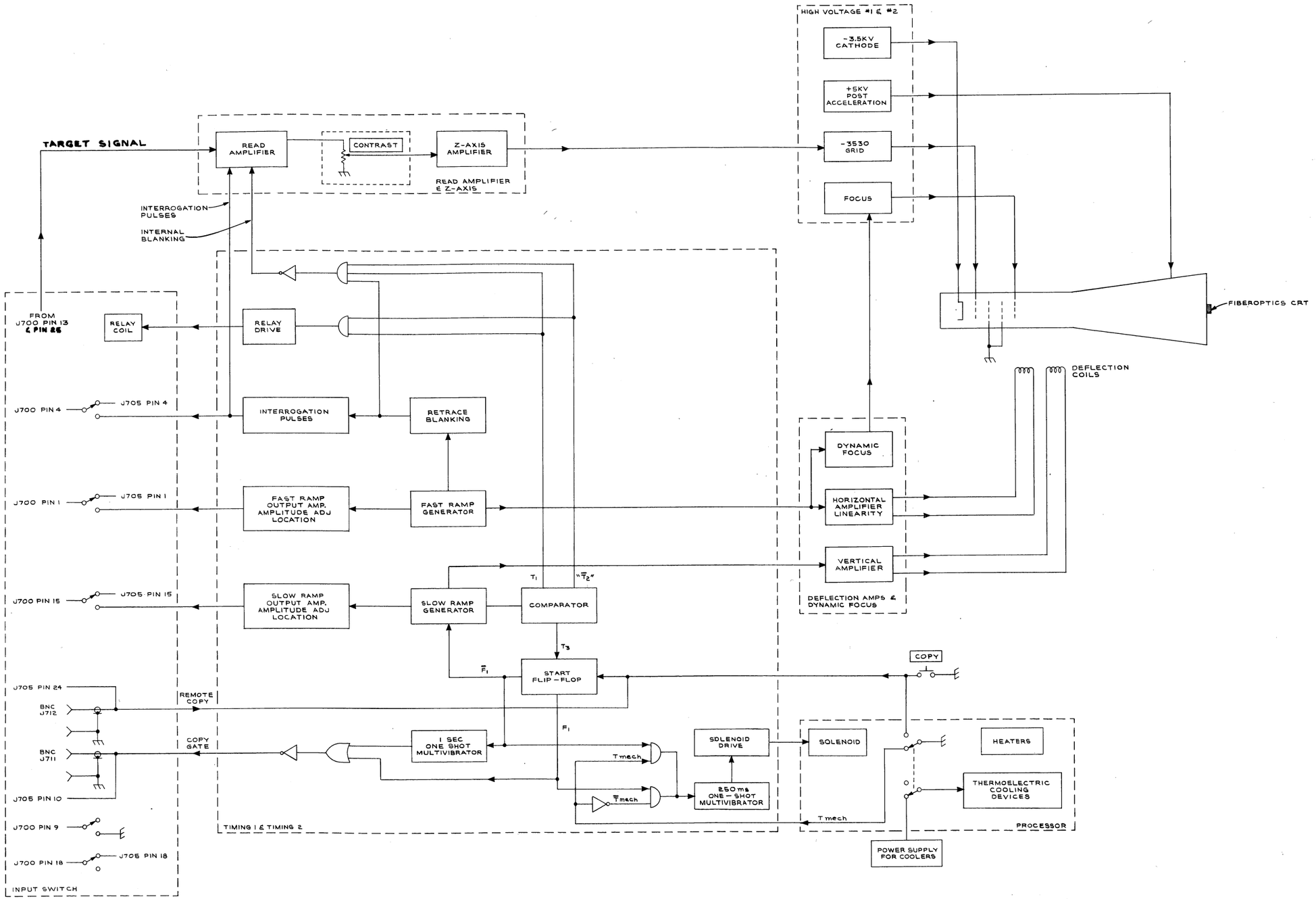

SN B020000-UP

BLOCK DIAGRAM 770 EKP

4601 HARDCOPY UNIT

Ⓐ

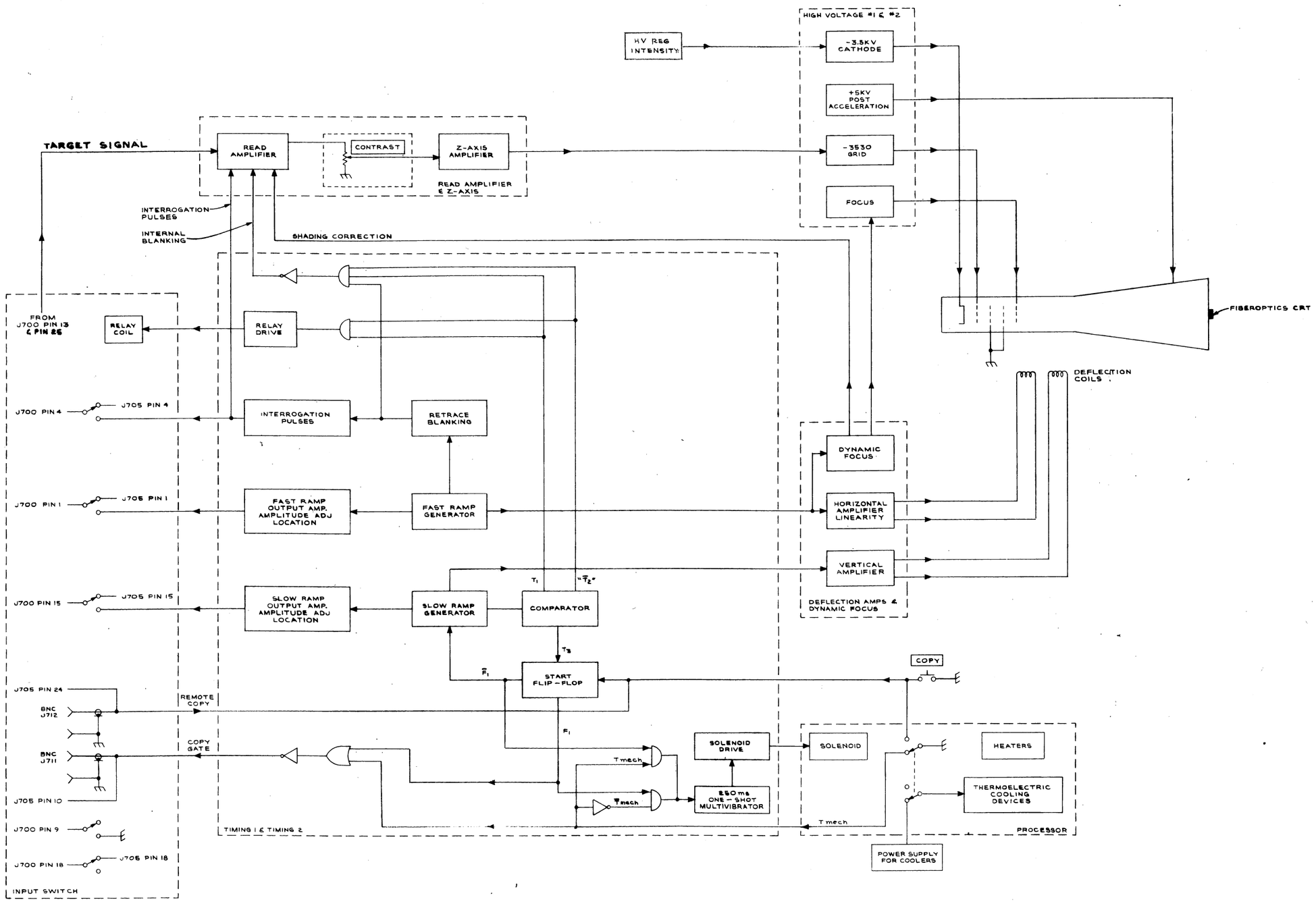

SN B010100 - B019999

4601 HARDCOPY UNIT

Ⓐ

BLOCK DIAGRAM 770 EKD

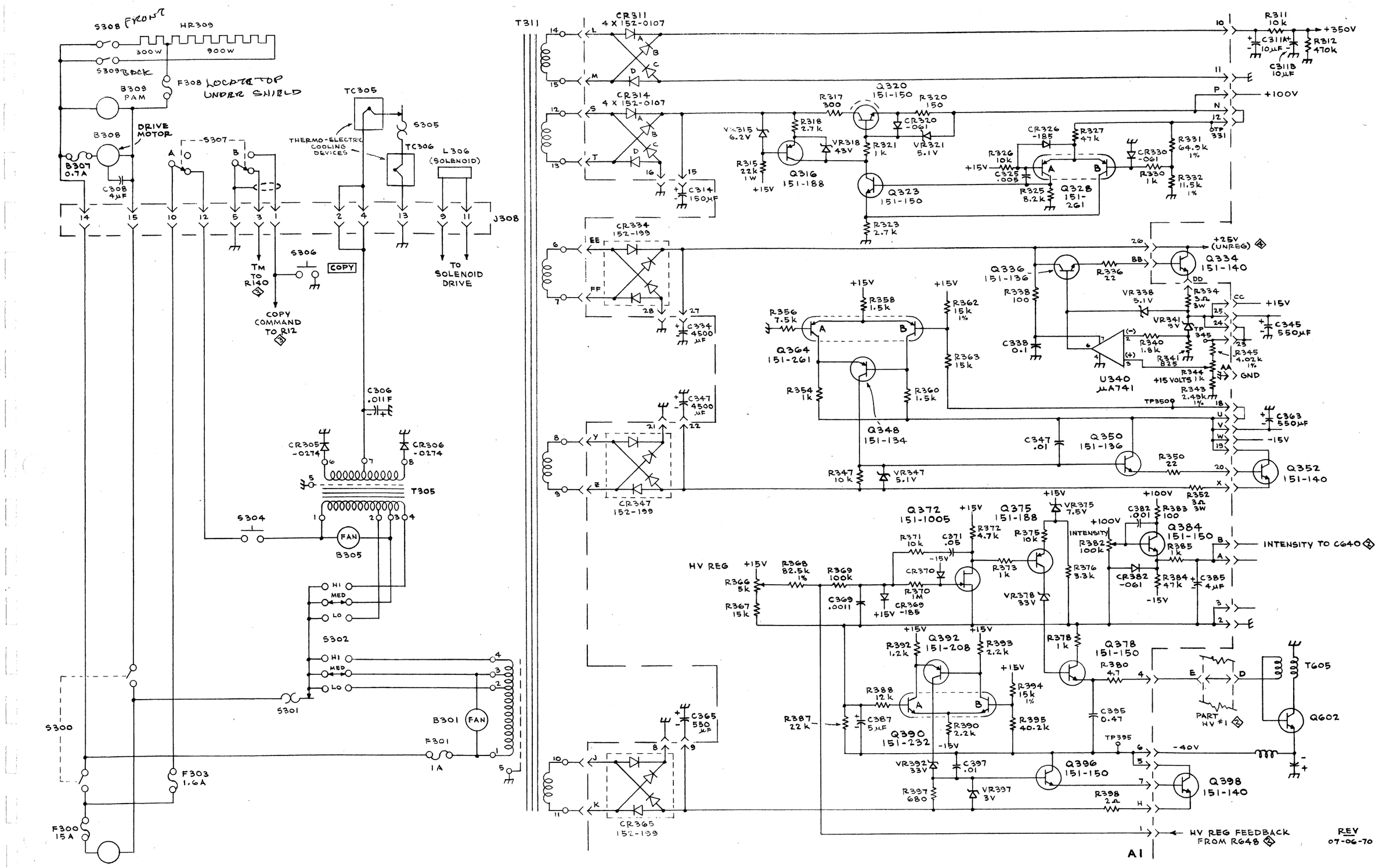

TYPE 4601 HARD COPY UNIT

SN B020000 - UP

POWER SUPPLY & HV REG 1 5-23-70

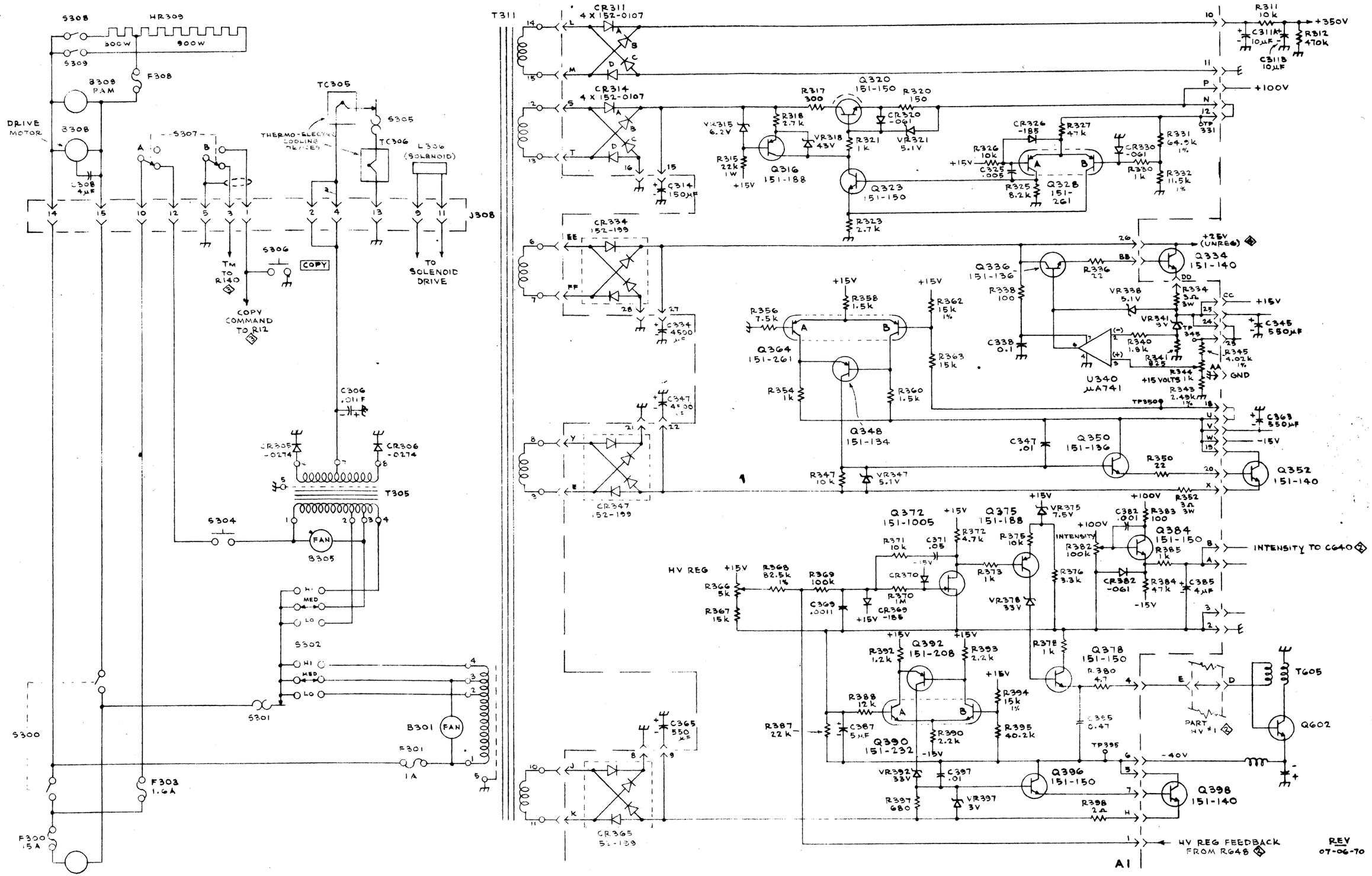

TYPE 4601 HARD COPY UNIT

SN B010100-B019999

POWER SUPPLY & HV REG 5-23-70

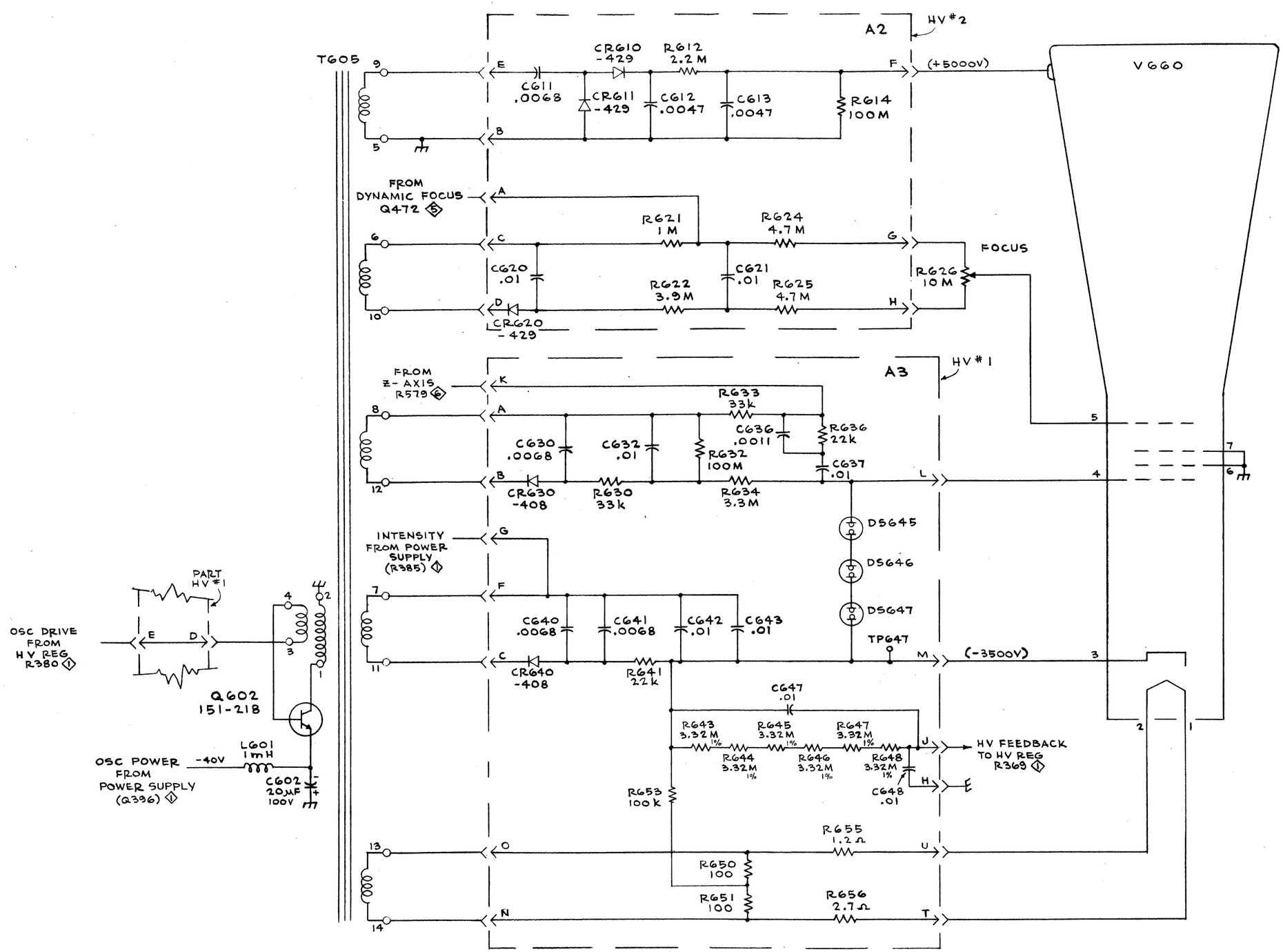

REV 9-16-70

TYPE 4601 HARD COPY UNIT

SN B020000-UP
HIGH VOLTAGE #1 & #2 ② 6-10-70

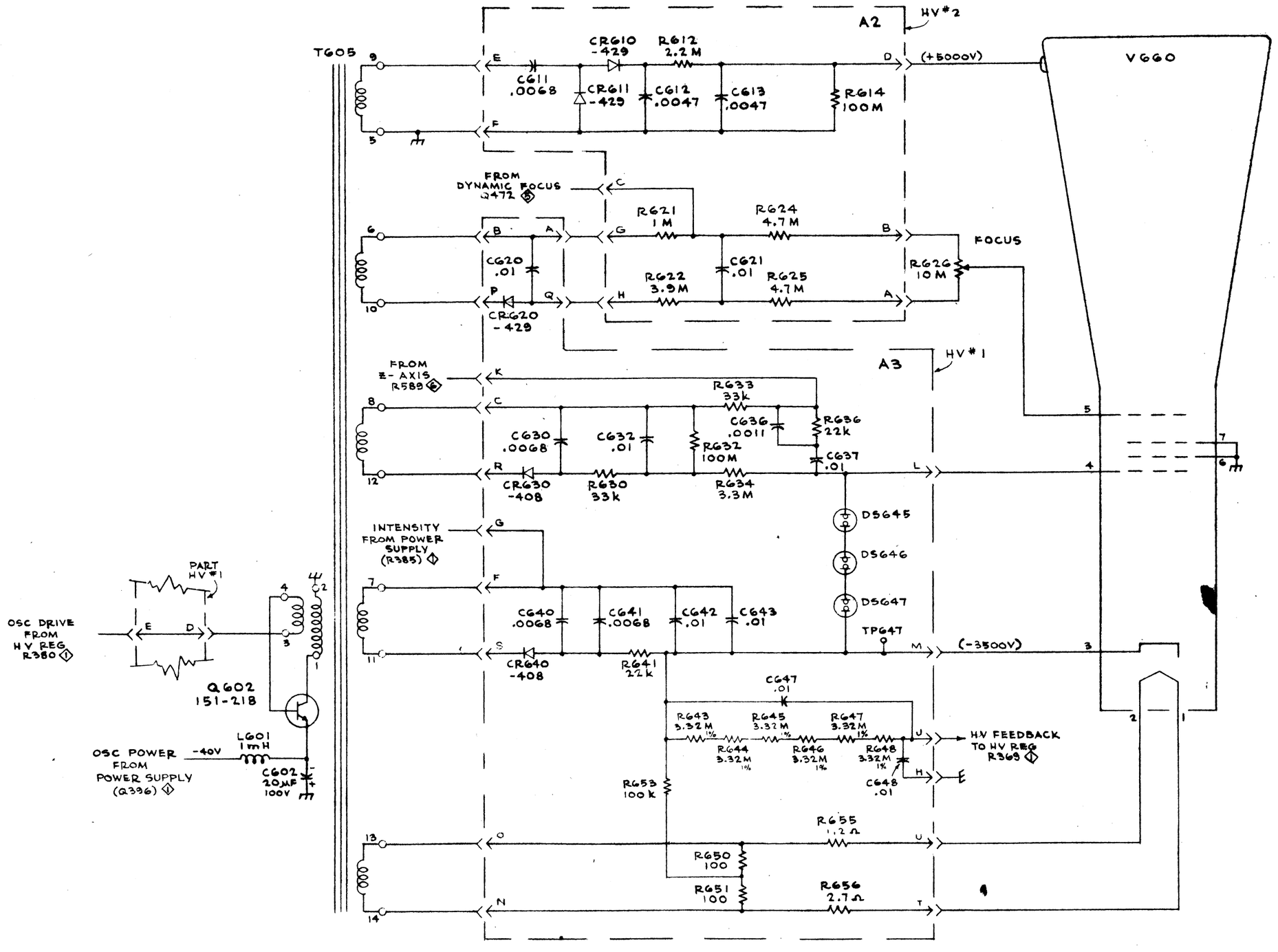

TYPE 4601 HARD COPY UNIT

REV
07-06-70
07-28-70

SN B010100 - B019999

HIGH VOLTAGE #1 & #2 ② 6-10-70

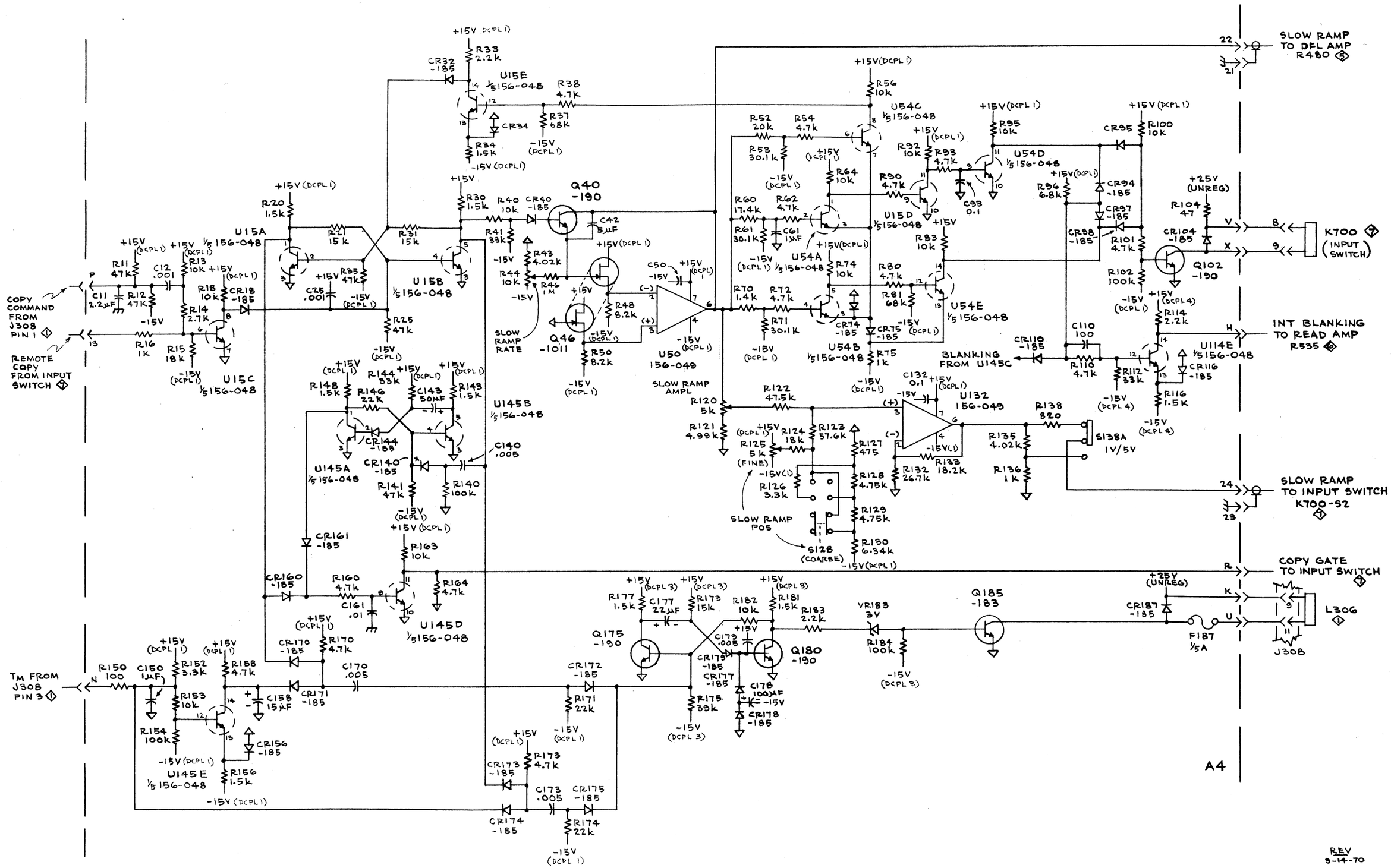

TYPE 4601 HARD COPY UNIT

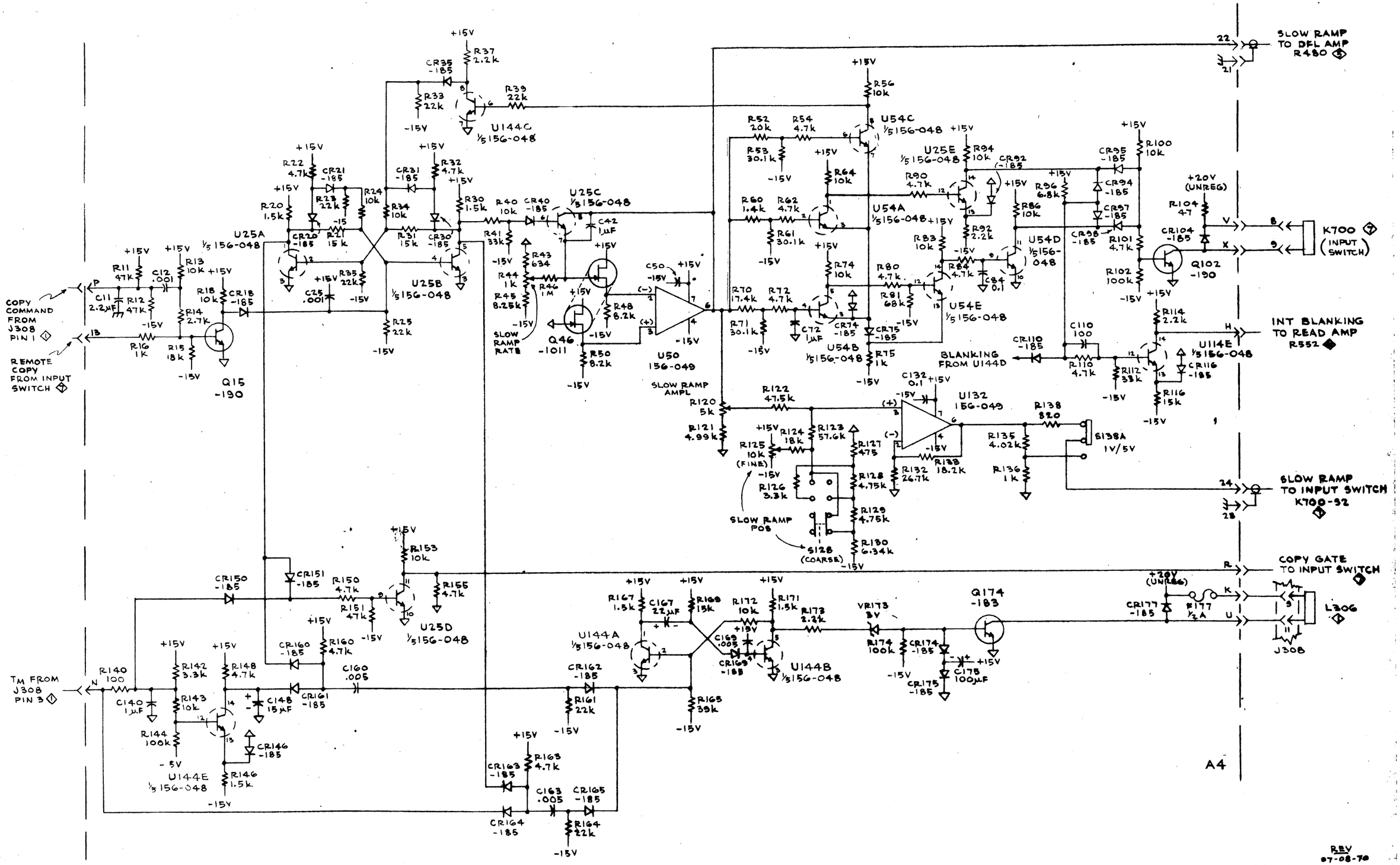

TYPE 4601 HARD COPY UNIT

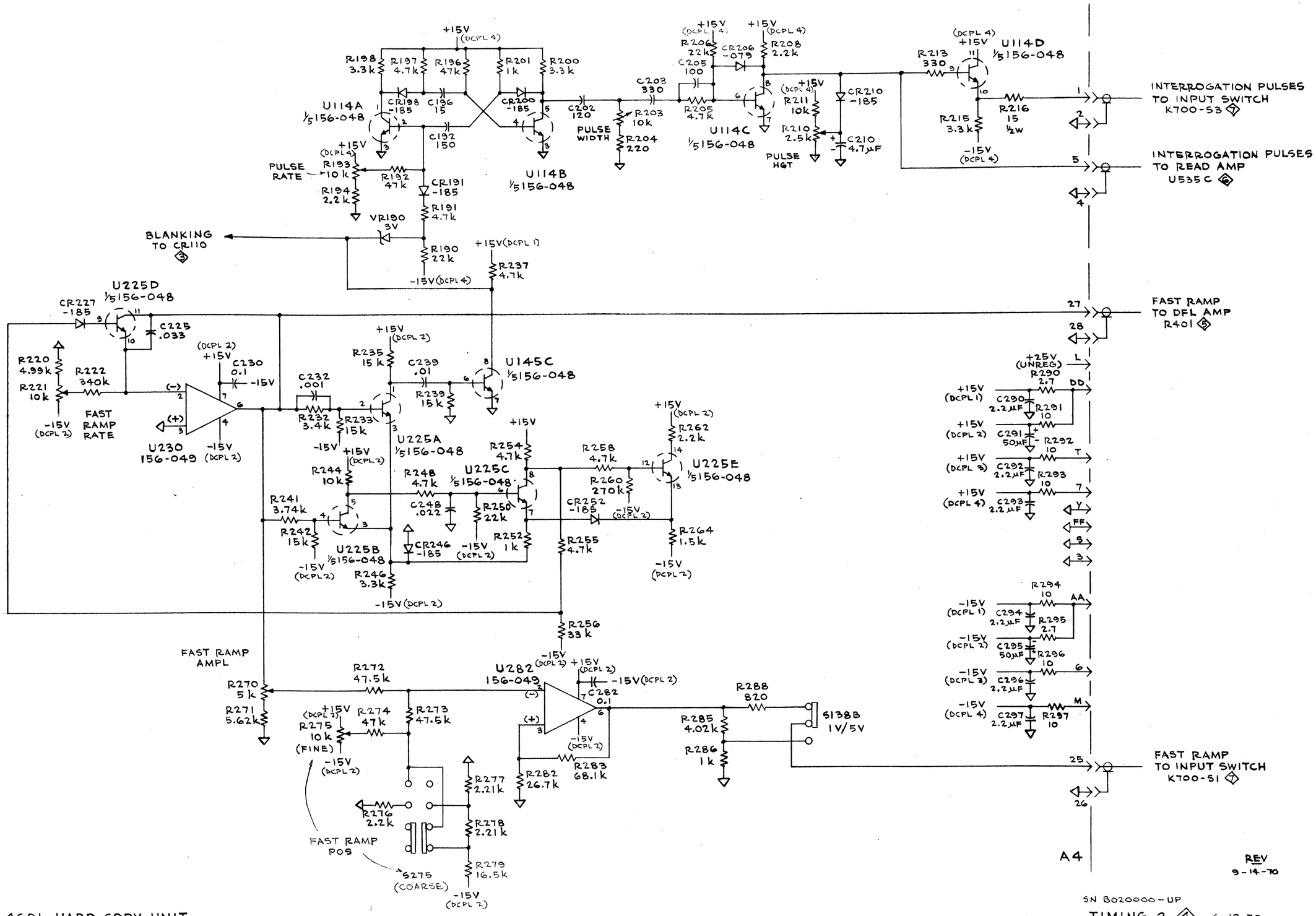

TYPE 4601 HARD COPY UNIT

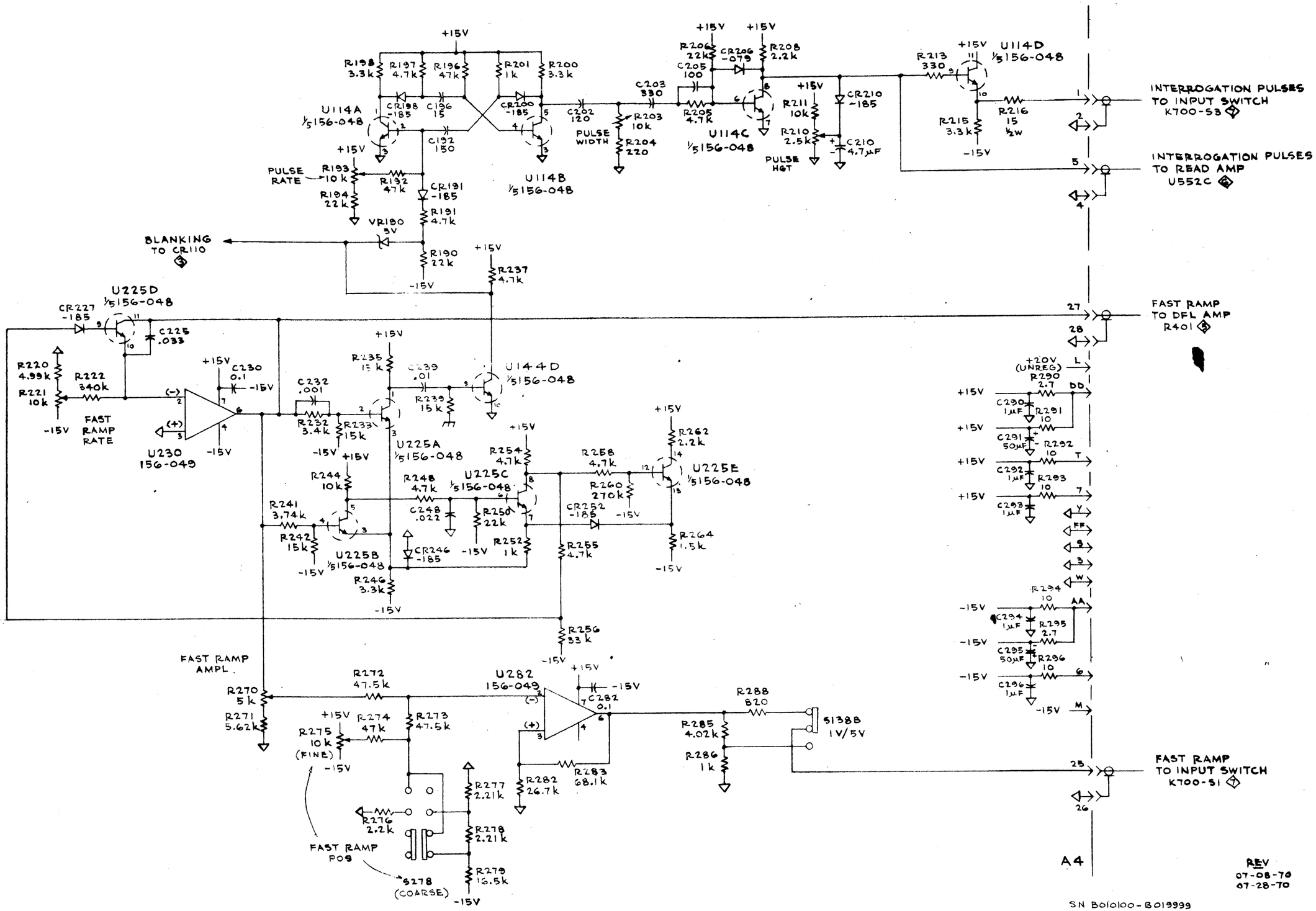

TYPE 4601 HARD COPY UNIT

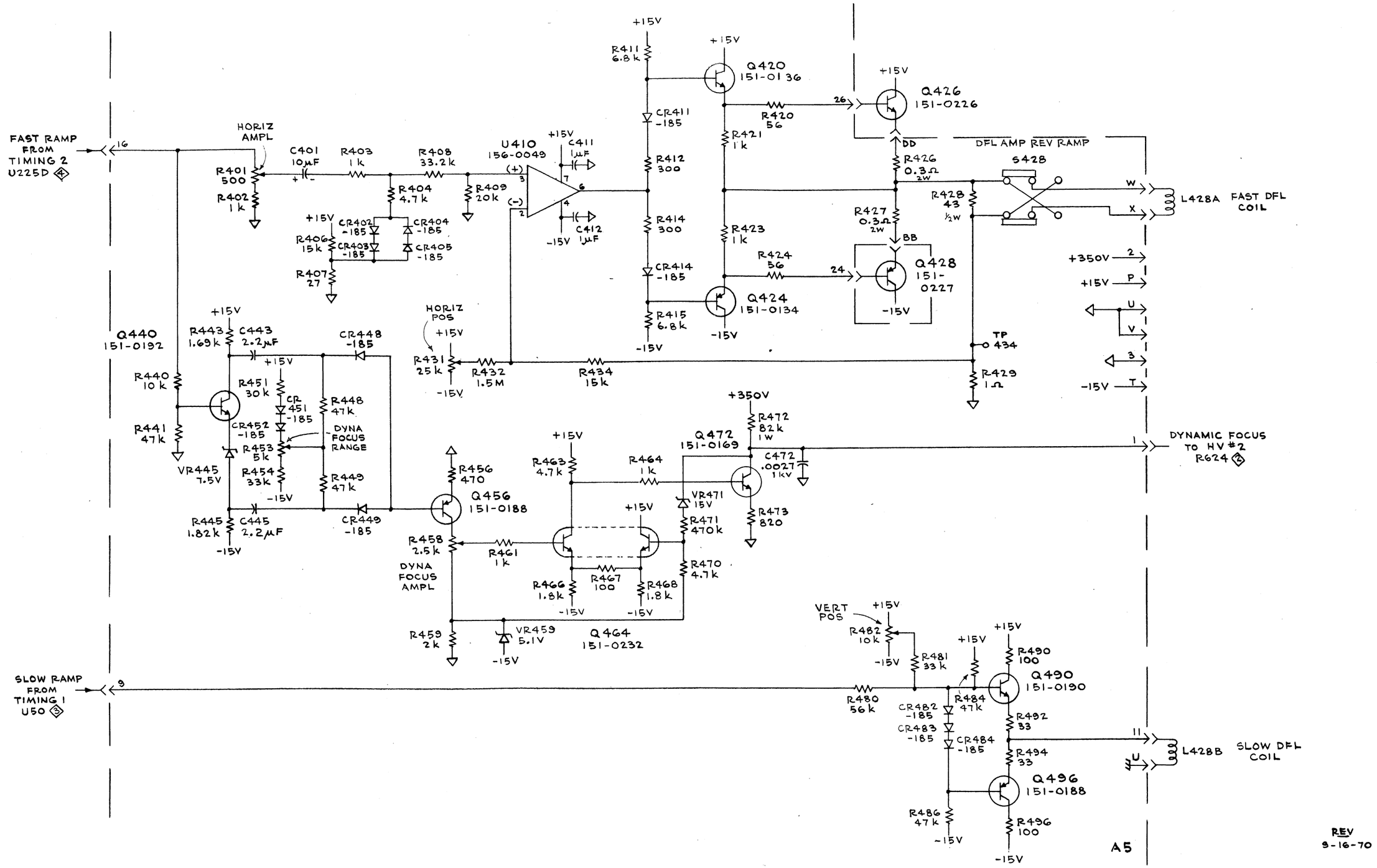

TYPE 4601 HARD COPY UNIT

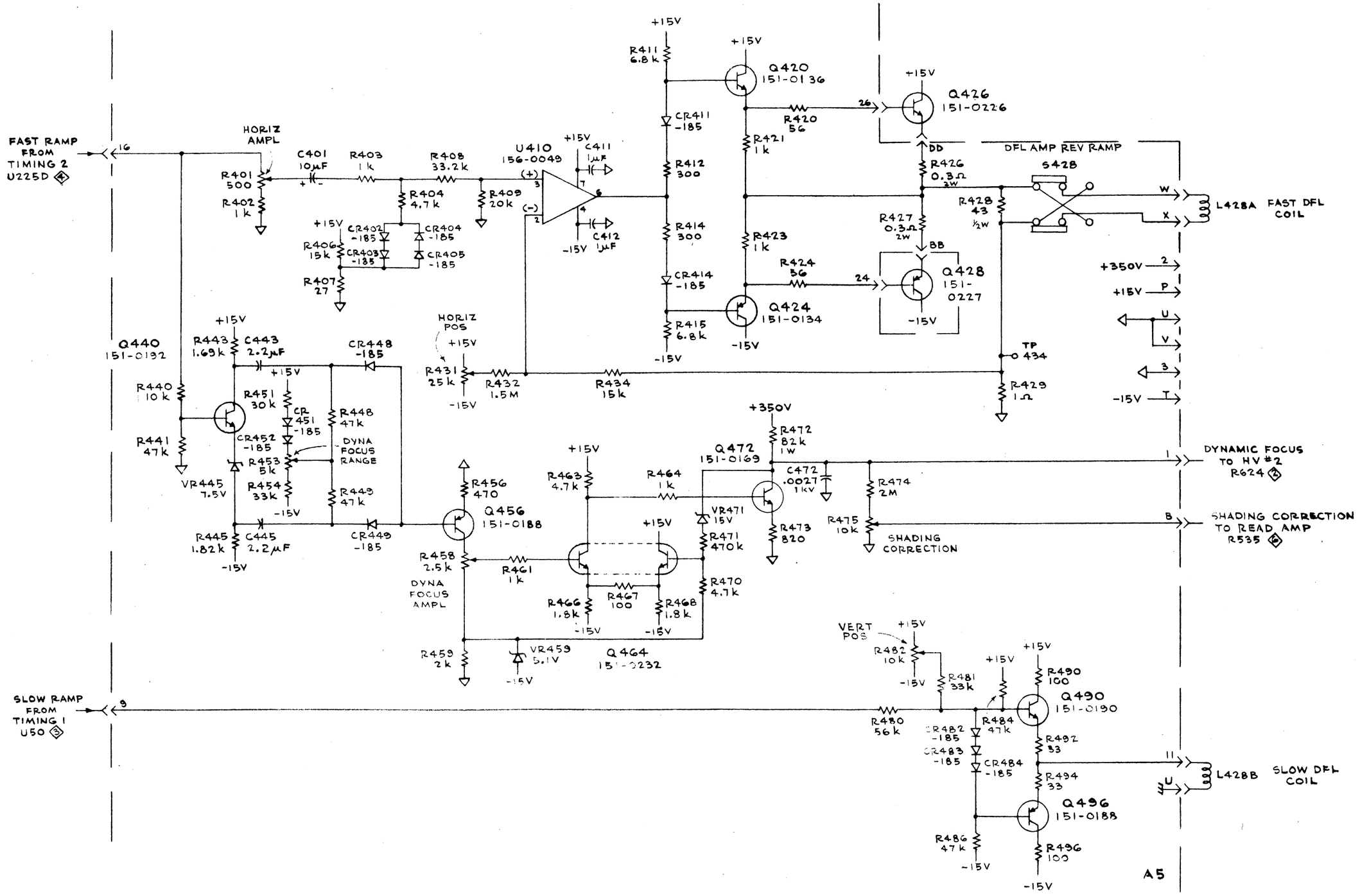

TYPE 4601 HARD COPY UNIT

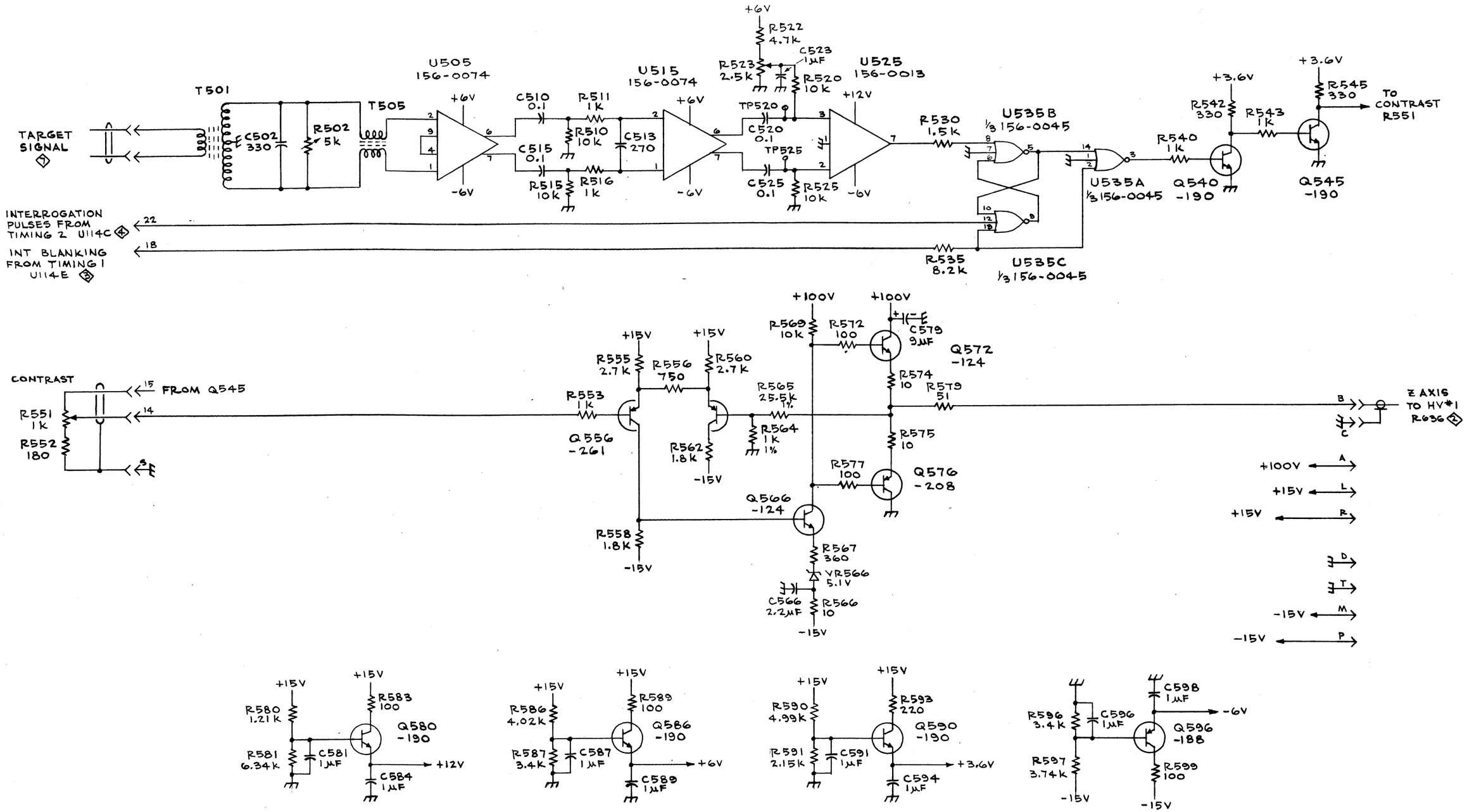

TYPE 4601

SN B020000-UP 9-14-70

READ AMPLIFIER & Z AXIS

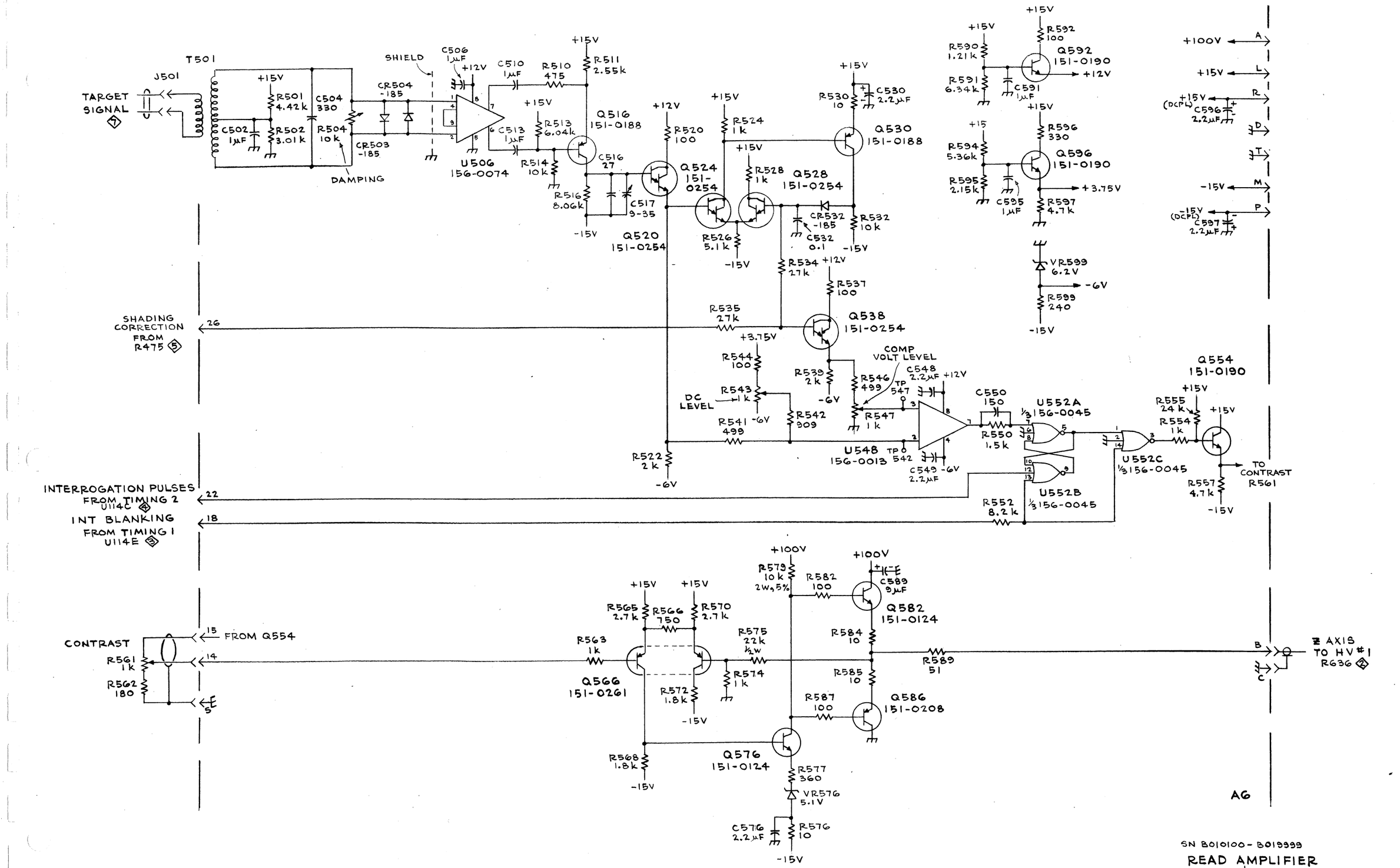

TYPE 4601 HARD COPY UNIT

SN B010100 - B019999

READ AMPLIFIER & Z-AXIS

6-9-70

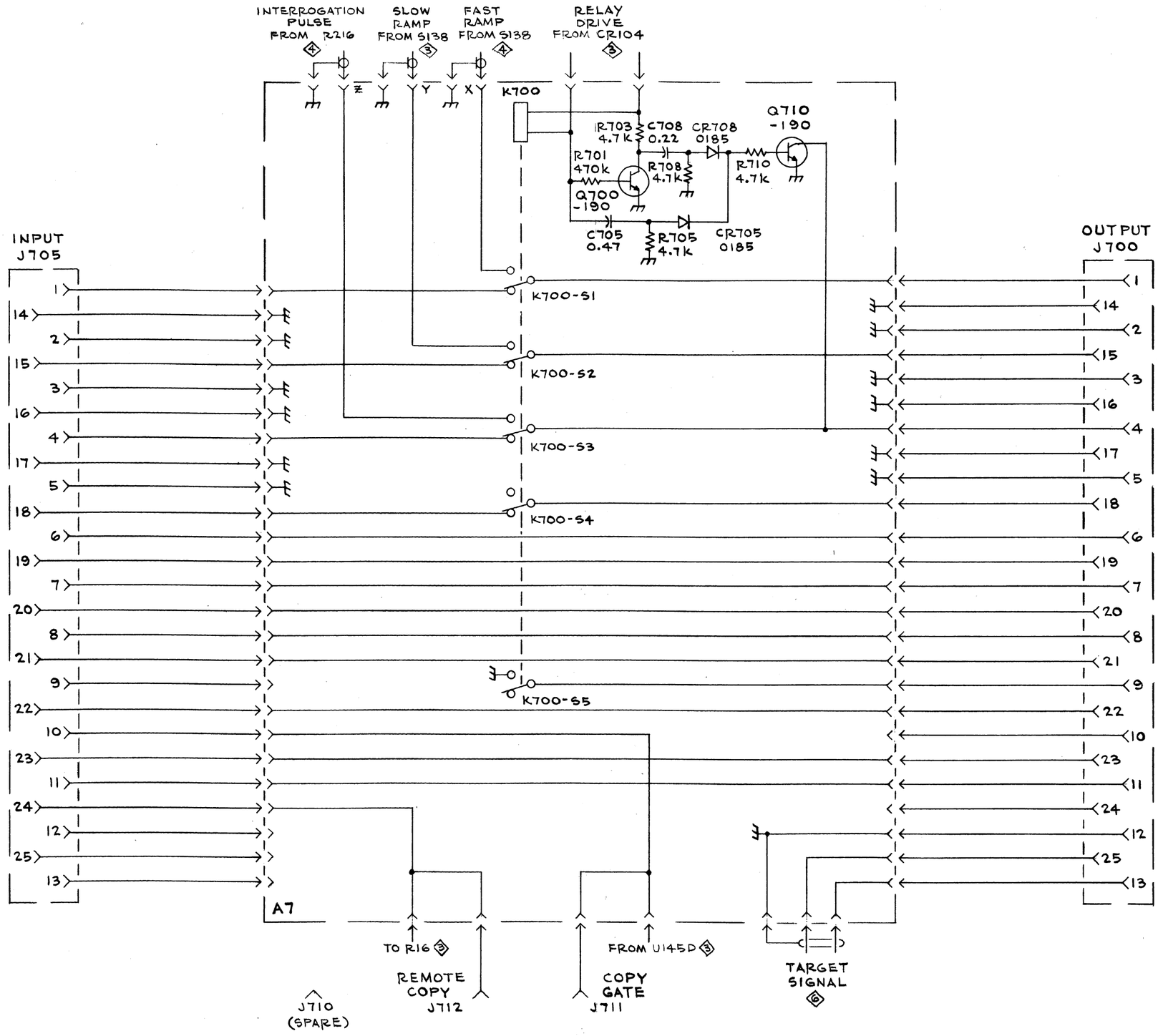

TYPE 4601 HARD COPY UNIT

INPUT SWITCH 7

07-28-70