INSTRUCTION MANUAL

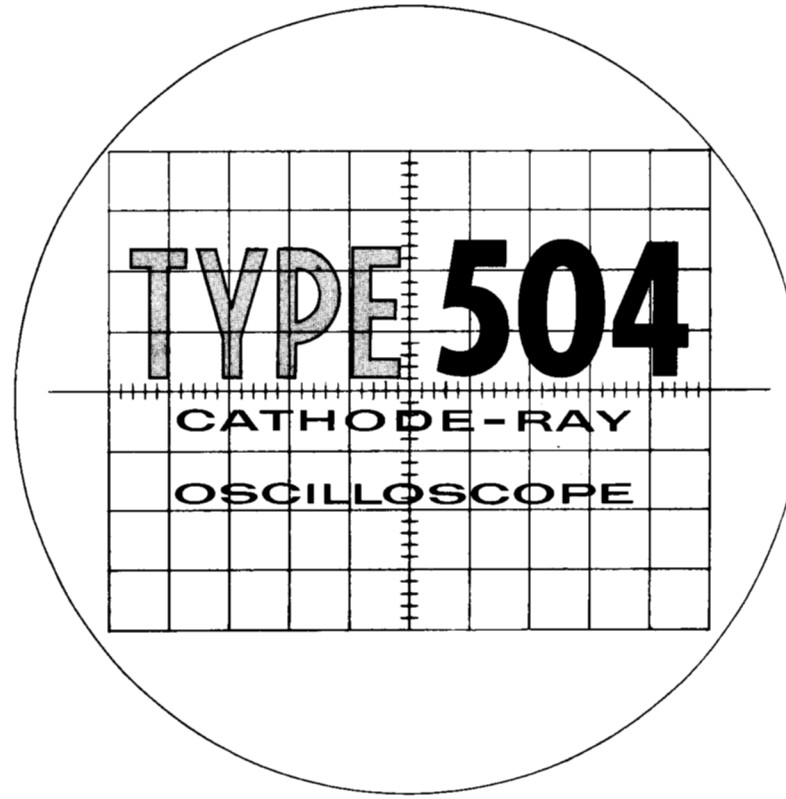

S. W. Millikan Way ● P.O. Box 500 ● Beaverton, Oregon ● Phone MI 4-0161 ● Cables: Tektronix

070-224

http://manoman.sqhill.com

WARRANTY

All Tektronix instruments are warranted against defective materials and workmanship for one year. Tektronix transformers, manufactured in our own plant, are warranted for the life of the instrument.

Any questions with respect to the warranty mentioned above should be taken up with your Tektronix Field Engineer.

Tektronix repair and replacement-part service is geared directly to the field, therefore all requests for repairs and replacement parts should be directed to the Tektronix Field Office or Representative in your area. This procedure will assure you the fastest possible service. Please include the instrument Type and Serial number with all requests for parts or service.

Specifications and price change privileges reserved.

Copyright © 1960 by Tektronix, Inc., Beaverton, Oregon. Printed in the United States of America. All rights reserved. Contents of this publication may not be reproduced in any form without permission of the copyright owner.

http://manoman.sqhill.com

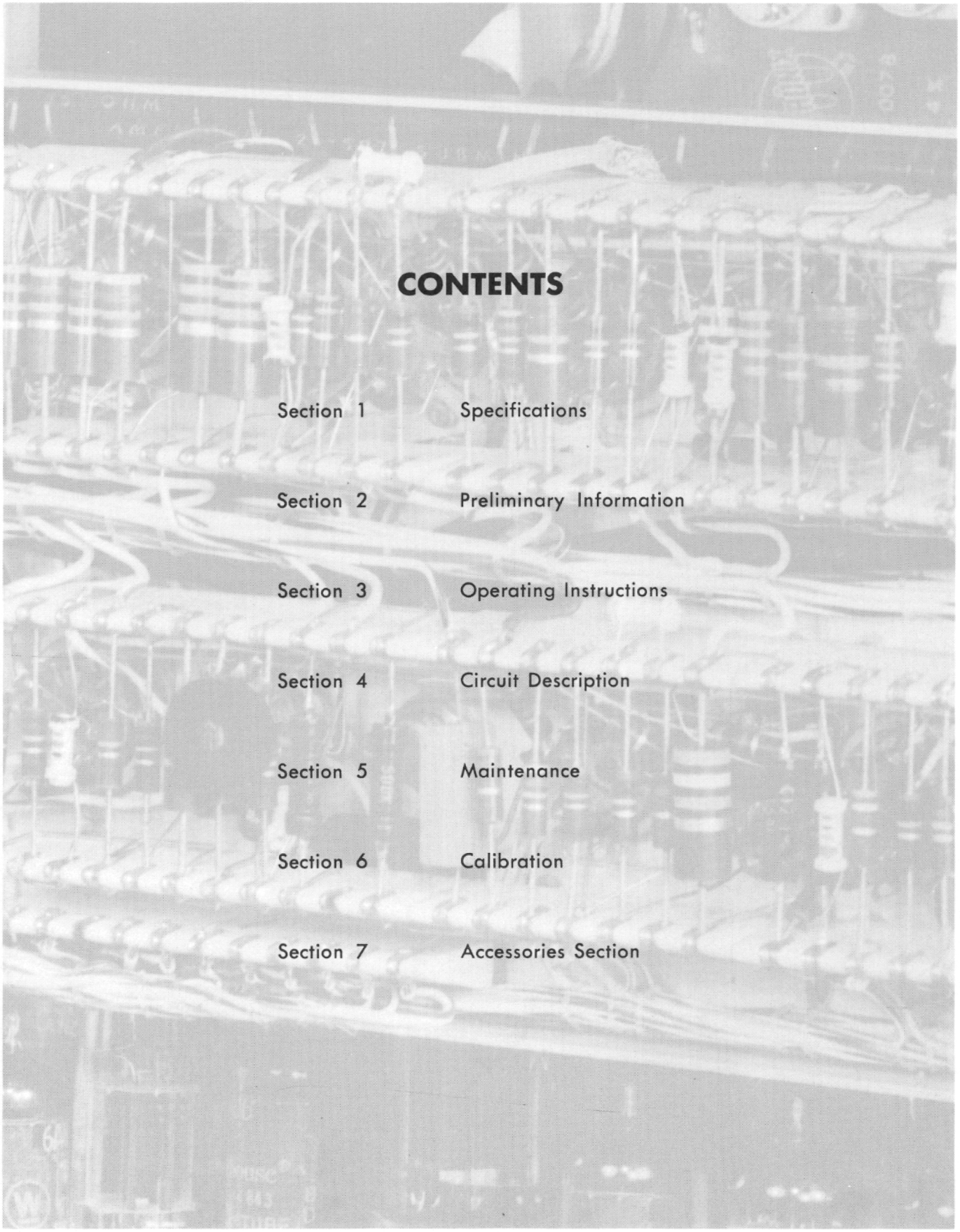

CONTENTS

Section 1	Specifications
Section 2	Preliminary Information
Section 3	Operating Instructions
Section 4	Circuit Description
Section 5	Maintenance
Section 6	Calibration
Section 7	Accessories Section

http://manoman.sqhill.com

Type 504

Ⓐ

http://manoman.sqhill.com

TYPE RM504

Instructions

General Information

This section provides information specifically applicable to the Type RM504 Oscilloscope. The Type RM504 is the same oscilloscope as the standard Type 504 except that it is modified for rack mounting. Therefore, all information in the Type 504 Instruction Manual is applicable to the RM504 except for such differences as cabinet finish, dimensions, weight, and some of the illustrations. When using the Instrution Manual, refer to this section for important information which applies to the Type RM504.

With minor exceptions, the separate Parts List and Schematic Diagrams booklet included with the Instruction Manual applies to either the standard or rack-mount instruments. The exceptions are included in this section.

Finish

Photo-etched anodized front panel, etched aluminum cabinet.

Dimensions

7" high, 19" wide, 16½" deep (additional depth of 3" required for power cord).

Weight

25 pounds.

Rack Mounting

The Type RM504 is ready for mounting in a standard 19-inch open or enclosed relay rack.

To mount the instrument directly to either type of rack, first select four screws from the hardwore kit whose threads match the threads of the mounting holes in the rack. Align the slots at the sides of the front panel with the holes in the rack, at the desired height. Fasten the instrument to the rack with four mounting screws, cup washers, and plastic washers. The plastic washers are inserted between the cup washers and the front panel to prevent the cup washers from cutting into the front panel when the screws are tightened.

Removal of Top and Bottom Panels

The top and bottom panels of the Type RM504 Oscilloscope are held in place by small flat-head screws. To remove the panels, first remove the screws. Then slide the panels back and lift free of the instrument. The panels can be replaced by reversing the order of their removal.

Thermal Cutout

A thermal cutout switch in the primary circuit of the power transformer, T601, protects the Type RM504 from over-heating. If the internal temperature rises above the rating of the thermal switch, the switch will disconnect the power and keep it disconnected until the temperature drops to a safe value.

Illustrations

The illustrations on pages 2 and 3 replace, as indicated, Figs. 3-1, 6-1, 6-2 and 6-3 in the Type 504 Instruction Manual.

Schematic Diagrams Changes

The partial schematic diagrams on page 4 show changes made to the Type 504 circuitry for use in Type RM504 instruments.

Parts List Changes and Additions

Change the Tektronix part number of R601 from 311-057 to 311-055. The following parts are added:

C434	10 μμf Cer. Fixed 500 v ±1 μμf	281-504
SW601	single-pole, single-throw toggle. PWR. ON	260-134
TK601	Thermal Cutout, 150° F.	260-336
B603	Bulb, miniature incandescent, GE #12	150-018

http://manoman.sqhill.com

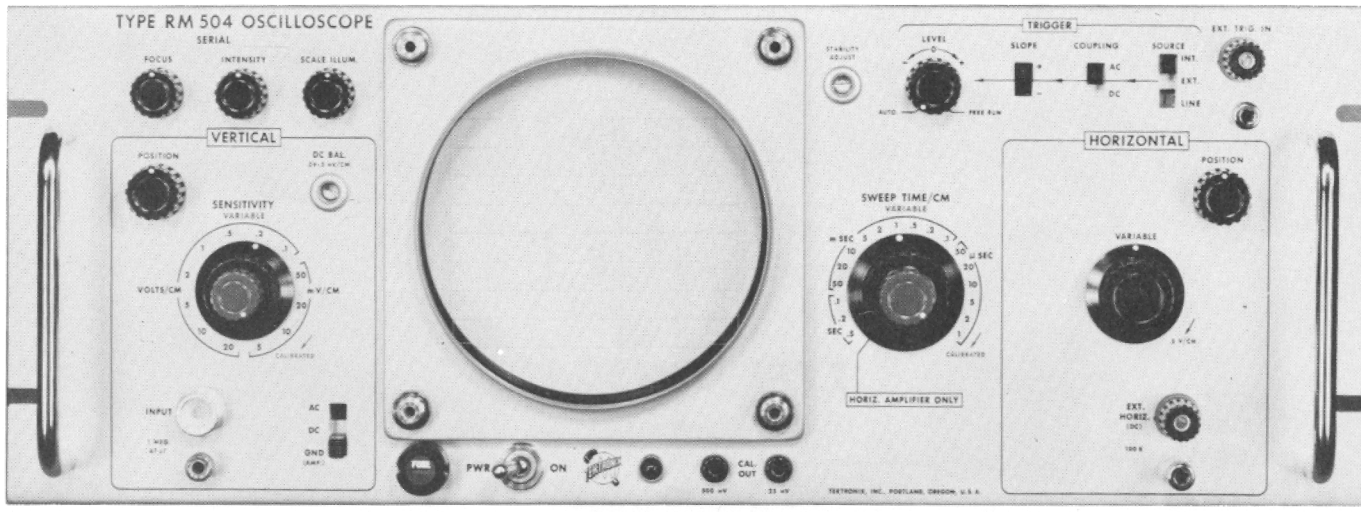

Fig. 1. Type RM504 front panel. This photograph replaces Fig. 3-1 in the Instruction Manual.

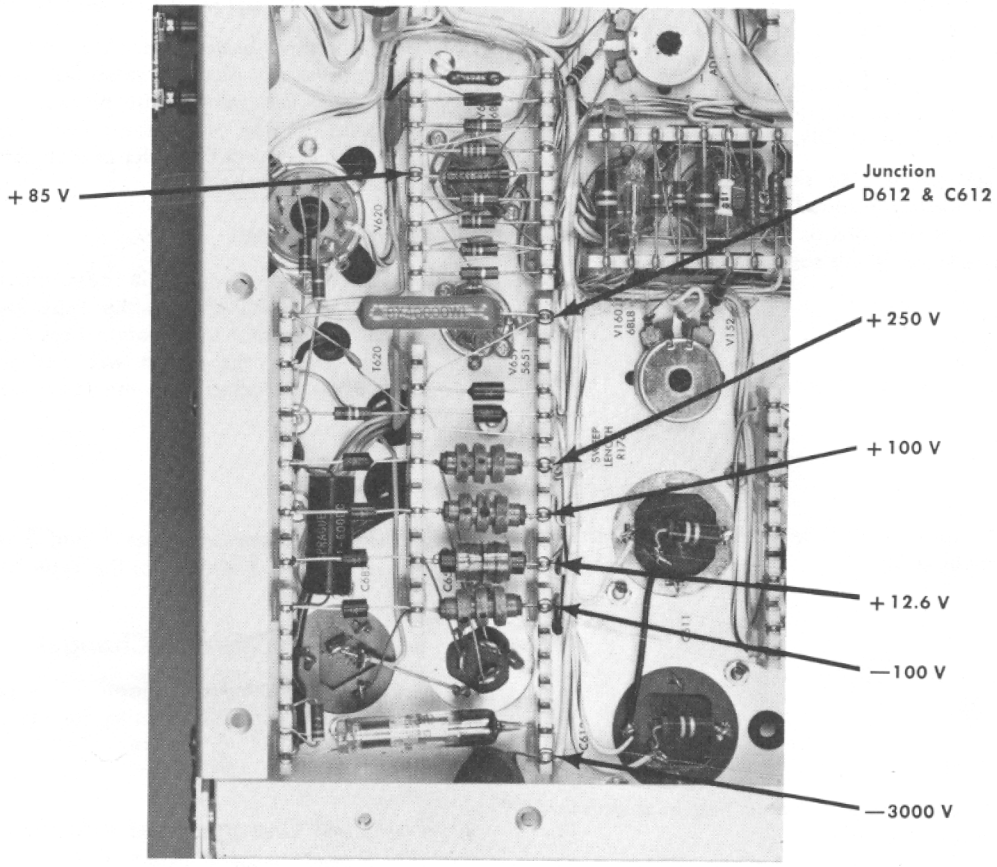

Fig. 2. Location of the Power Supply test points. This illustration replaces Fig. 6-3 in the Instruction Manual.

http://manoman.sqhill.com

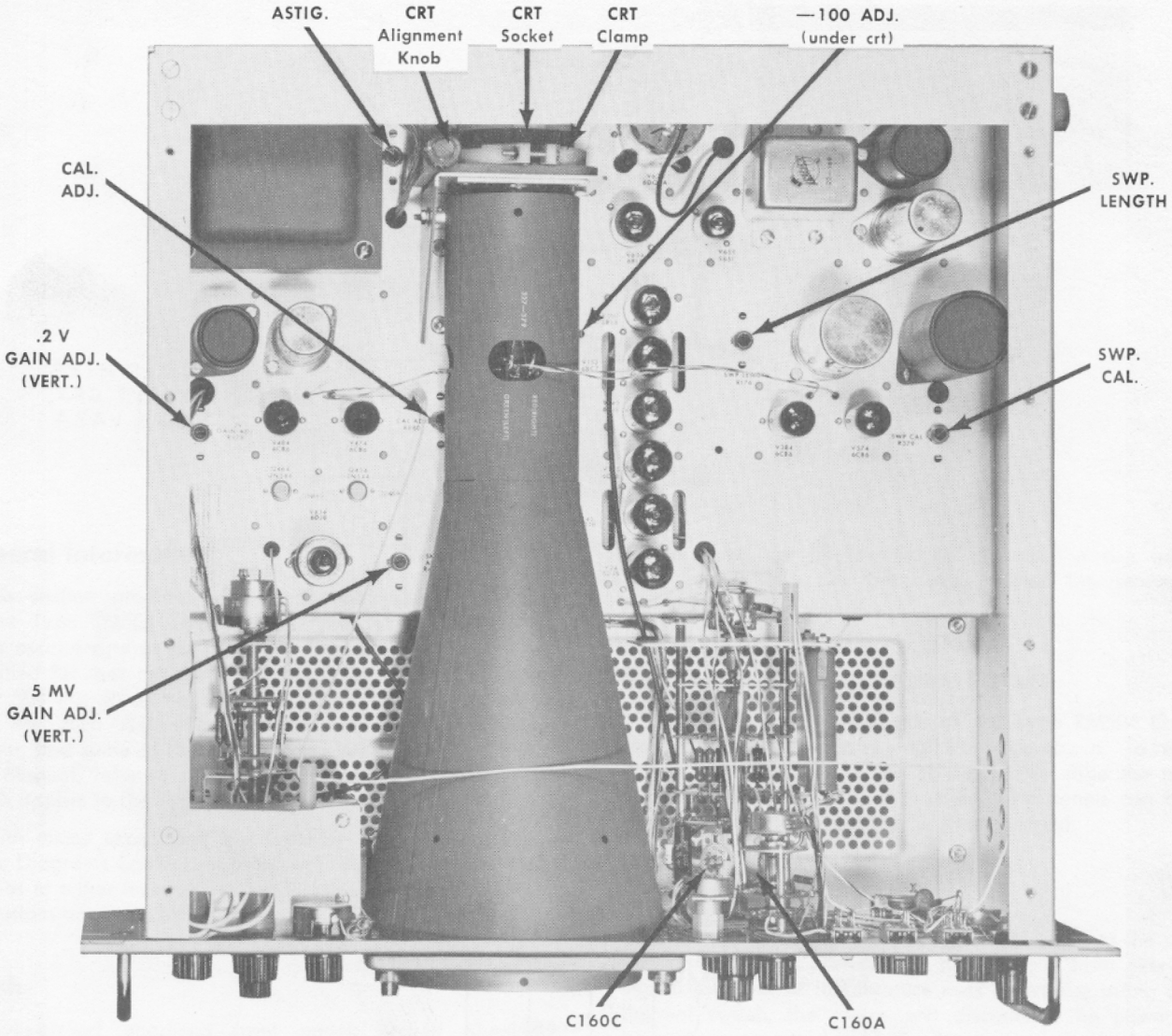

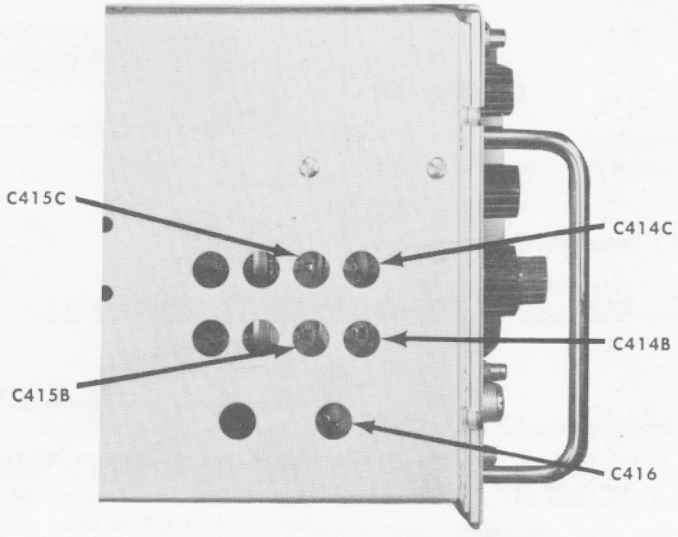

Fig. 3. Top and side views of the Type RM504. These illustrations replace Figs 6-1 and 6-2 in the Instruction Manual.

http://manoman.sqhill.com

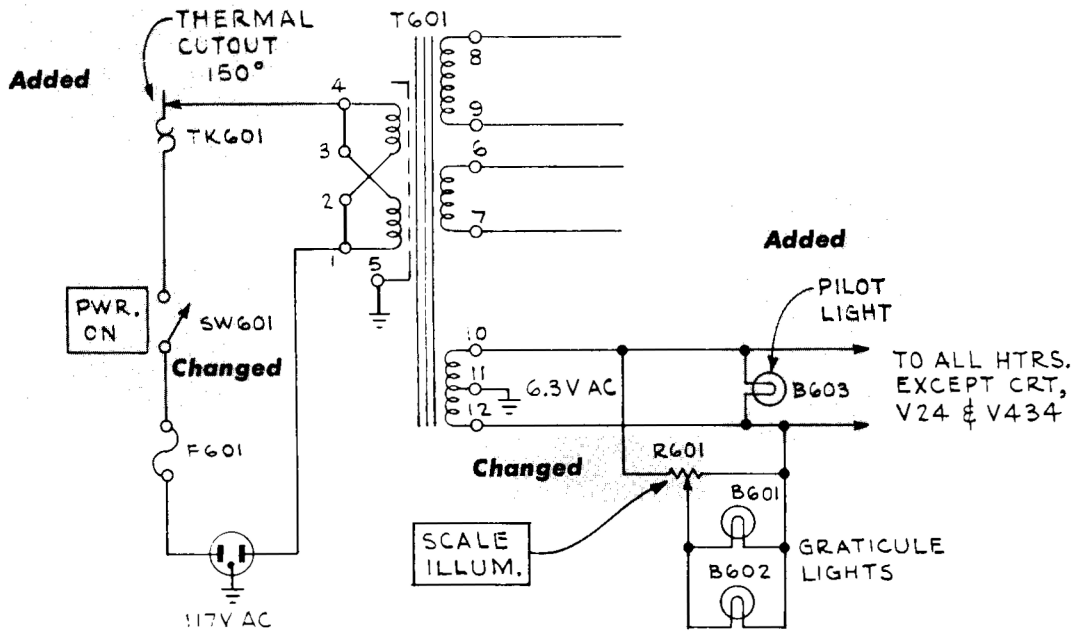

PARTIAL POWER SUPPLY SCHEMATIC

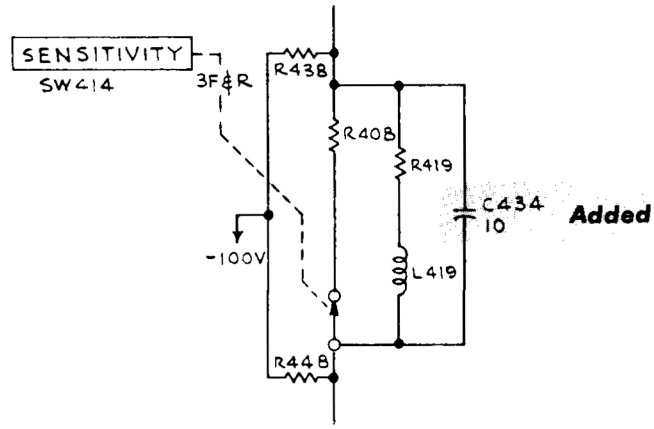

PARTIAL VERTICAL AMPLIFIER SCHEMATIC

Fig. 4. Partial schematic diagrams showing changes and additions to the Type 504 circuitry for use in the Type RM504.

http://manoman.sqhill.com

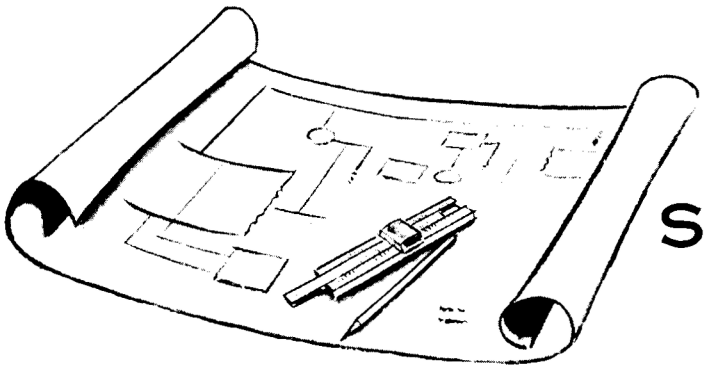

SECTION 1

SPECIFICATIONS

Introduction

The Tektronix Type 504 Oscilloscope is a low-frequency, high-sensitivity laboratory instrument providing accurate time and amplitude measurements in the range from dc to 450 kc. Its high reliability, stability, simple operation, and light weight make it adaptable as a general purpose laboratory instrument.

Vertical Deflection System

Input Impedance—1 megohm paralleled by 47 $\mu\mu$f.

Coupling—AC or DC.

Deflection Factors—Twelve calibrated deflection factors from 5 millivolts per centimeter to 20 volts per centimeter, accurate within 3%.

Bandpass—DC to 450 kc (vertical response down 3 db or less at 450 kc).

Triggering

Type—Automatic, or amplitude-level selection using preset stability.

Coupling—AC or DC.

Slope—Plus, from positive slope of triggering waveform, or minus, from negative slope of triggering waveform.

Source—Internal from vertical signal, external from triggering signal, or line from 60 cps.

Signal Requirements—Internal: signal producing 0.5 centimeter or more vertical deflection on crt screen.
External: 0.5 volt to 10 volts, peak. (Sweep will trigger on larger external signals, but LEVEL control operates over ±10-volt range).

Sweep

Type—Miller Integrator.

Rates—Eighteen calibrated sweep rates from 1 microsecond per centimeter to 0.5 second per centimeter.
Accuracy typically within 1% of the indicated sweep rate; in all cases within 3%.

External Horizontal Input

Sensitivity—0.5 volt per centimeter maximum.

Input Resistance—100 kilohms.

Amplitude Calibrator

Waveform—Square waves at approximately 350 cps.

Amplitude—25 millivolts and 500 millivolts, peak-to-peak.

Cathode-Ray Tube

Type T503P

Phosphor—Type P2 normally furnished; P1, P7, and P11 phosphors optional. Other phosphors available on special order.

Accelerating Potential—3000 volts.

Z-Axis Modulation—External terminal permits RC coupling to crt grid.

Graticule

Illumination—Variable edge lighting.

Display Area—Marked in 8 vertical and 10 horizontal 1-centimeter divisions, with 2-millimeter markings on the centerlines.

•

Power Supplies

Electronically regulated for stable operation with widely varying line voltages and loads.

Line Voltage Requirements—105 to 125 volts, or 210 to 250 volts, rms, 50-60 cycles. Will operate at line frequencies to 800 cps with higher line voltages (see Section 2).

Power Requirements—Approximately 110 watts.

Mechanical Specifications

Construction—Aluminum alloy chassis and cabinet.

Finish—Photo-etched anodized panel, blue vinyl-finish cabinet.

Dimensions—21½" long, 9¾" wide, and 13½" high.

Weight—29 pounds.

Accessories

1 Binding Post Adaptor

1 Parts List and Schematic Diagrams Booklet

1 Instruction Manual

http://manoman.sqhill.com

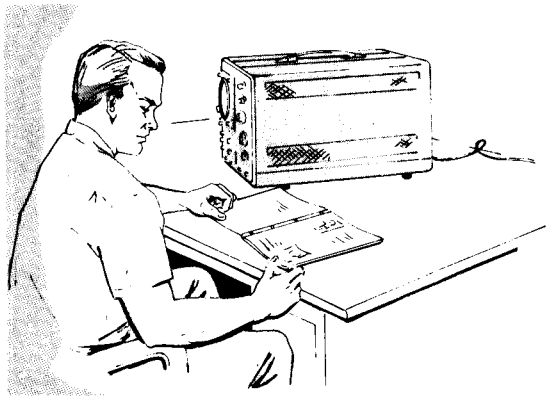

SECTION 2

PRELIMINARY INFORMATION

Power Requirements

The Type 504 Oscilloscope line transformer primary can be wired for either 117-volt or 234-volt operation at a line frequency of 50 to 60 cps. At this frequency, proper regulation of the power supply will be obtained at voltages between 105 and 125 volts when the transformer is wired for 117-volt operation, and between 210 and 250 volts when the transformer is wired for 234-volt operation. Fig. 2-1 shows the transformer connections required for each range of operation.

The Type 504 Oscilloscope can be operated at any ac line frequency from 50 cps to 800 cps although higher line voltages are required at the higher frequencies. At an ac line frequency of 400 cps, the nominal and lower and upper limits are about 10% higher than at 50 to 60 cps. At an ac line frequency of 800 cps, the nominal and lower and upper limits are about 15% higher than at 50 to 60 cycles. At frequencies between the specific values given, the required voltages will be proportionately larger or smaller. For maximum dependability and longest life, it is recommended that the line voltage be kept at or slightly below the nominal.

Fuse Requirements

A 1.25-amp slow-blowing type fuse should be used when the Type 504 is wired for 117-volt operation. A 0.8-amp slow-blowing type fuse should be used when the Type 504 is wired for 234-volt operation.

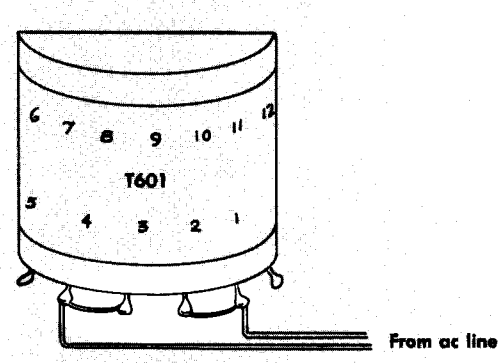

Line transformer (T601) primary wired for 117-volt operation.

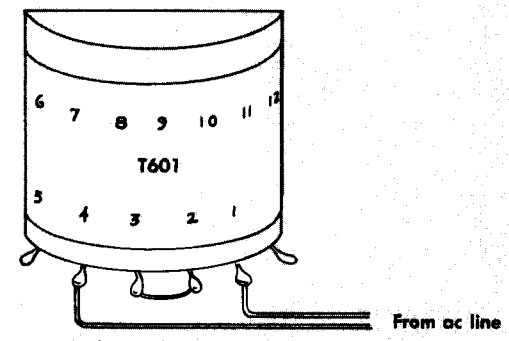

Line transformer (T601) primary wired for 234-volt operation.

Fig. 2-1. Line transformer wired for 117- and 234-volt operation.

http://manoman.sqhill.com

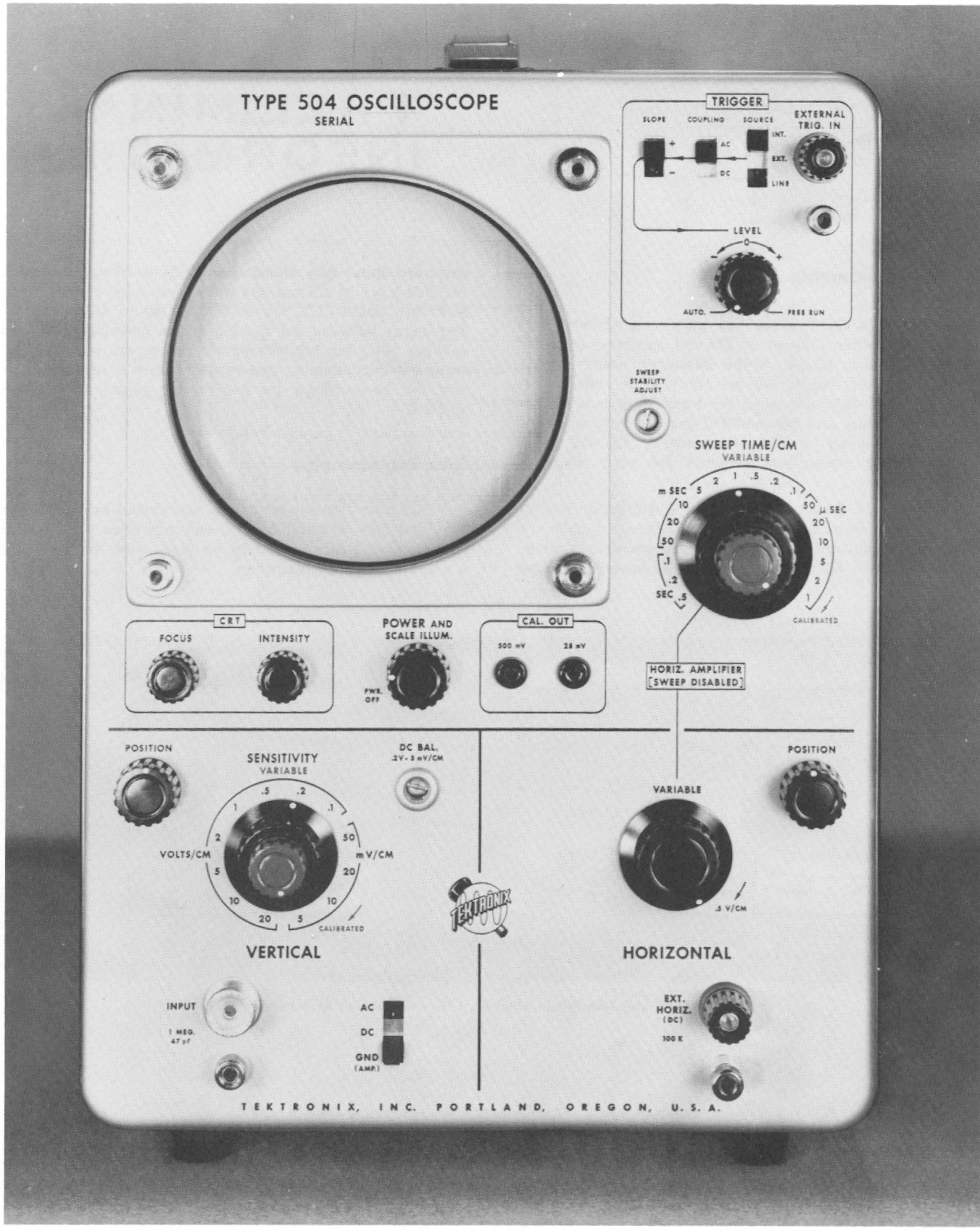

Fig. 3-1. Type 504 Oscilloscope front panel.

http://manoman.sqhill.com

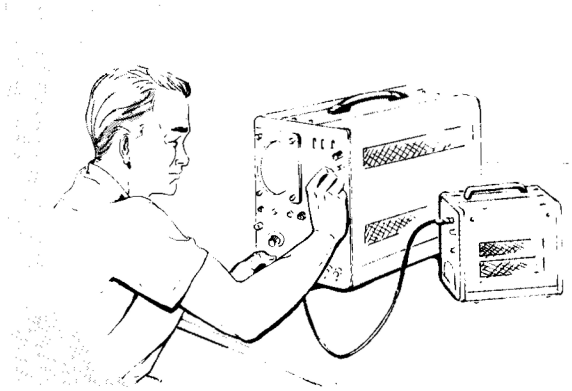

SECTION 3

OPERATING INSTRUCTIONS

FRONT-PANEL CONTROLS AND CONNECTORS

The front panel of the Type 504 Oscilloscope is shown in Fig. 3-1. Functions of all front-panel controls and connectors are described in Table 3-1.

TABLE 3-1

SLOPE	Selects whether triggering occurs on positive-going portion (+slope) or negative-going portion (—slope) of triggering signal.
COUPLING	Selects whether triggering occurs at a specific dc level or at an ac level.
SOURCE	Selects the source of the triggering signal.
EXTERNAL TRIG. IN connector	Input connector for external triggering signal.
LEVEL	Selects the voltage point on the triggering signal at which the horizontal sweep is triggered. This control also selects automatic triggering (AUTO. position) or allows the sweep to free run (FREE RUN position).
SWEEP STABILITY ADJUST	Provides for stable presentation with proper setting of LEVEL control.
SWEEP TIME/CM	Selects the desired horizontal sweep rate from a choice of 18 calibrated steps; or provides for application of external signal to Horizontal Amplifier (HORIZ. AMPLIFIER position).
SWEEP TIME/CM VARIABLE (Red knob)	Provides for a continuous range of sweep rates between the fixed steps selected by the SWEEP TIME/CM control. Normally, sweep rates are calibrated only when the VARIABLE control is set to the CALIBRATED position (fully clockwise until it snaps into position).
FOCUS	Focuses the spot or trace on the screen.
INTENSITY	Controls the brightness of the spot or trace on the screen.
POWER AND SCALE ILLUM.	Turns the instrument power on and off, and controls graticule illumination.
CAL. OUT connectors	Provide amplitude-calibrated square waves of 25 and 500 millivolts for use in calibrating gain of amplifiers.
VERTICAL POSITION	Controls vertical positioning of the display on the screen.
SENSITIVITY	Selects the sensitivity of the Vertical Amplifier from 12 calibrated steps.
SENSITIVITY VARIABLE (Red knob)	Provides a continuous range of sensitivity values between the fixed calibrated steps selected by the SENSITIVITY control. Normally, sensitivity is calibrated only when VARIABLE control is set to the CALIBRATED position (fully clockwise until it snaps into position).
DC BAL.	Provides for vertical stability of no-signal trace for all positions of the SENSITIVITY control.
INPUT connector	Input connector for signal to be displayed vertically.
AC-DC-GND switch	Selects desired coupling for incoming signal, or grounds input circuit of Vertical Amplifier.
HORIZONTAL VARIABLE	Controls attenuation of signal applied to EXT. HORIZ. connector.
HORIZONTAL POSITION	Controls horizontal positioning of the display on the screen.
EXT. HORIZ. connector.	Input connector for signal to be displayed horizontally.

PRELIMINARY INSTRUCTIONS

To initially set up the Type 504 Oscilloscope for operation, proceed as follows:

1. Connect the oscilloscope to a suitable source of power (as described in Section 2 of this manual) and turn the POWER switch clockwise from the PWR. OFF position. Set the INTENSITY control fully counterclockwise. Let the instrument warm up for about 5 minutes.

2. Set all front panel controls to the positions shown in Fig. 3-1. Make sure that both red VARIABLE controls are set to the CALIBRATED position (fully clockwise until they snap into position).

3. Adjust the FOCUS control for the most sharply defined trace.

4. Note the vertical position of the trace on the screen.

5. Set the SENSITIVITY control to the 5 mV/CM position.

http://manoman.sqhill.com

6. Adjust the DC BAL. control to bring the trace back to where it was in step 4.

7. Continue adjusting the DC BAL. control so that the trace does not move vertically as the SENSITIVITY control is moved between the .2 VOLTS/CM position and the 5 mV/CM position.

The Vertical Amplifier is now balanced and the oscilloscope is ready for operation as described in the remainder of this section.

Graticule Illumination

Graticule illumination can be adjusted to suit the lighting conditions of the room by means of the POWER AND SCALE ILLUM. control. Turning the control counterclockwise (but not to the PWR. OFF position) increases the graticule illumination. It is possible to extinguish the graticule illumination completely by turning the control fully clockwise.

The graticule of the Type 504 Oscilloscope can be illuminated so that it appears to have either red or white graticule markings. The markings can be changed from white to red or red to white simply by removing the graticule cover and inverting the graticule. As a general rule, white graticule lines are superior to red for photographic purposes.

INPUT COUPLING

The signal to be displayed on the crt screen is connected to the INPUT connector, preferably by means of a coaxial cable. The signal may be either ac or dc coupled by placing the AC-DC-GND switch in the appropriate position. Setting the AC-DC-GND switch to DC applies both the ac and dc components of the signal to the amplifier circuits. This permits you to measure the dc voltage level as well as the amplitude of the ac component. However, it is sometimes neither necessary nor desirable to display the dc component, and in such cases ac coupling should be used. Setting the AC-DC-GND switch to AC places a capacitor in series with the INPUT connector to block the dc component while allowing the ac component to be displayed. Placing the AC-DC-GND switch in the GND position grounds the input circuit of the Vertical Amplifier to provide a ground reference point from which to measure dc voltages.

Certain precautions must be observed in connecting the oscilloscope to the signal source to prevent errors due to stray electric or magnetic coupling in the leads. Shielded cables should be used whenever possible, with the shield connected to the chassis of both the oscilloscope and the signal source. Regardless of the type of input lead used, it should be kept as short as possible.

In broadband applications, it might be necessary to terminate a coaxial input cable with a resistor or an attenuating pad which presents a resistance equal to the characteristic impedance of the cable. This is to prevent resonance effects and "ringing" (high-frequency damped oscillation). It becomes more necessary to terminate the cable properly as the length of the cable is increased. The termination is generally placed at the oscilloscope end of the cable, although many sources require an additional termination at the source end of the cable as well.

Also, to reduce the loading effects of the oscilloscope on the equipment being tested, it may be desirable to use an attenuator probe which will present a greater input impedance to the signal source. The Accessories Section at the rear of this manual lists a number of cables, probes, terminating resistors, and pads suitable for use with the Type 504 Oscilloscope.

USE OF PROBES

Use of an attenuator probe with the 504 will reduce the capacitive and resistive loading on a circuit under test, but at the same time will also reduce the sensitivity.

Connected to the VERTICAL INPUT connector of the Type 504, a Tektronix probe presents a characteristic impedance of 10 megohms paralleled by from 8 to 14 $\mu\mu$f (depending on the probe) and has an attenuation of 10:1. The maximum voltage rating of a Tektronix probe is 600 volts. Exceeding this rating, either in dc volts or peak ac volts, may damage the probe.

While making amplitude measurements with an attenuator probe, be sure to multiply the observed amplitude on the crt by the attenuation factor of the probe. If the waveform being displayed contains fast-changing signals, it will generally be necessary to clip the probe ground lead to the chassis of the equipment under test.

Probe Compensation

An adjustable capacitor in all Tektronix probes is used to compensate for variations in input capacitance from one instrument to another. To insure the accuracy of pulse and transient measurements, always check the compensation before using a probe.

To check or adjust the probe compensation, display several cycles of the Calibrator waveform on the crt by connecting a test lead between the 500 mV CAL. OUT connector and the VERTICAL INPUT connector. For this display set the SENSITIVITY control to .1 VOLTS/CM and the AC-DC-GND switch to DC.

Carefully observe the waveform display on the crt, and particularly note the general shape of the leading corners of the positive pulses. Then disconnect the test lead between the CAL. OUT and INPUT connectors, and connect the probe cable to the INPUT connector. Set the SENSITIVITY control to 10 mV/CM and touch the probe tip to the 500 mV CAL. OUT connector. Square waves having the same amplitude as those in the previous display should now appear on the crt. Carefully adjust the probe capacitance, if necessary, until the leading corners of the positive pulses have the same shape as those in the previous display.

SWEEP OPERATION

The Type 504 Oscilloscope allows yau to select, with the SWEEP TIME/CM control, any one of 18 calibrated sweep rates ranging, in steps, from 1 microsecond per centimeter to 0.5 second per centimeter. The SWEEP TIME/CM VARIABLE control (red knob) makes it possible to obtain a can-

http://manoman.sqhill.com

tinuous range of sweep rates between the steps selected by the SWEEP TIME/CM control; however, all sweep rates obtained with the SWEEP TIME/CM VARIABLE control not in the CALIBRATED position are uncalibrated. Setting the SWEEP TIME/CM control to the HORIZ. AMPLIFIER position permits the use of the oscilloscope in the X-Y mode, with external signals applied to both the Vertical and Horizontal Amplifiers. Operation in the X-Y mode is discussed later in this section.

Sweep Triggering

In order to obtain a stable display, it is necessary to start the horizontal sweep consistently at the same time relative to recurring cycles of the input signal. The sweep therefore must be triggered by the input signal itself, or by some signal which bears a fixed time relationship to the input signal. The following instructions tell you how to select and use the proper triggering signal for various applications of the oscilloscope.

Selecting the Trigger Source

For most applications the sweep can be triggered by the input signal. The only requirement is that the input signal be large enough to provide at least 0.5 centimeter of deflection on the screen at the sensitivity level for which the SENSITIVITY control is set. To obtain triggering of the sweep from the input signal, set the SOURCE switch to INT.

Sometimes it is advantageous to trigger the sweep with some external signal. This is especially true when the input waveform is of such small amplitude that it cannot provide stable triggering of the sweep by itself. The Type 504 Oscilloscope will trigger properly on an external triggering signal of 0.5 volt or more. External triggering signals over 10 volts in amplitude should not be used as they will overdrive the Trigger Input Amplifier. External triggering is also useful where waveforms are going to be sampled from several different places within a device. By using external triggering it is not necessary to reset the triggering controls each time a new waveform is shown. In order to obtain a stable display, it is necessary that the external triggering signal bear a fixed relationship to the input signal. To use an external signal for triggering the horizontal sweep, connect the signal to the EXTERNAL TRIG. IN connector and set the SOURCE switch to EXT.

When you are observing a waveform which bears a fixed time relationship to the ac line frequency, you may wish to trigger the sweep from the line-frequency waveform. To do this, place the SOURCE switch to LINE.

Selecting the Trigger Coupling

For most recurrent waveforms, ac coupling of the trigger ing signal (COUPLING switch in the AC position) will provide satisfactory triggering of the sweep. DC coupling of the triggering signal (COUPLING switch in the DC position) is particularly useful in triggering from random pulse trains or very low frequency signals. With dc coupling the sweep is triggered by an instantaneous dc voltage. With ac coupling the sweep is triggered when the signal reaches a given amplitude from its average dc level.

Selecting the Trigger Slope

When the SLOPE switch is in the + position, the sweep is triggered on a positive slope of the triggering signal. When the SLOPE switch is in the — position, the sweep is triggered on a negative slope of the triggering signal. In most cases, selection of the triggering slope is not critical since triggering on either slope will usually provide a display which is suitable.

Selecting the Trigger Level

The LEVEL control determines the instantaneous voltage level (ac or dc, depending upon the setting of the COUPLING switch) on the triggering signal at which the sweep is triggered. Moving the LEVEL control clockwise causes triggering to occur on a more positive point of the triggering signal; moving it counterclockwise causes triggering to occur on a more negative point of the triggering signal. So it can be seen that, with proper settings of the SLOPE switch and the LEVEL control, triggering can be made to occur at virtually any point on a positive or negative slope of the triggering signal. The effects of these two controls are illustrated in Fig. 3-2.

At the extreme counterclockwise and clockwise ends of its range, the LEVEL switch activates, respectively, the AUTO. and FREE RUN switches. The effects of these switches are discussed in the following paragraphs.

Automatic Mode of Triggering

Setting the LEVEL control fully counterclockwise to the AUTO. position sets the Type 504 Oscilloscope up for an automatic mode of triggering which is suitable for most applications. In this mode, the triggering signal is ac coupled, and the triggering level is automatically set such that any external signal of one volt or more, or internal signal which would produce one centimeter or more of deflection on the crt screen, will trigger the sweep. In the absence of such a triggering signal, the sweep will continue to be triggered automatically at about a 50-cps rate. This produces a base line which indicates that the instrument is adjusted to display any signal which might be connected to the INPUT connector. This base line can also be used as a reference from which to make dc measurements when the input signal is dc coupled.

Free-Running Mode of Triggering

Setting the LEVEL control fully clockwise to the FREE RUN position produces a free-running sweep, independent of any synchronizing signal. The frequency of the free-running sweep is dependent upon the setting of the SWEEP TIME/CM control.

X-Y MODE OF OPERATION

Placing the SWEEP TIME/CM control in the HORIZ. AMPLIFIER position disables the Sweep Generator and sets the

http://manoman.sqhill.com

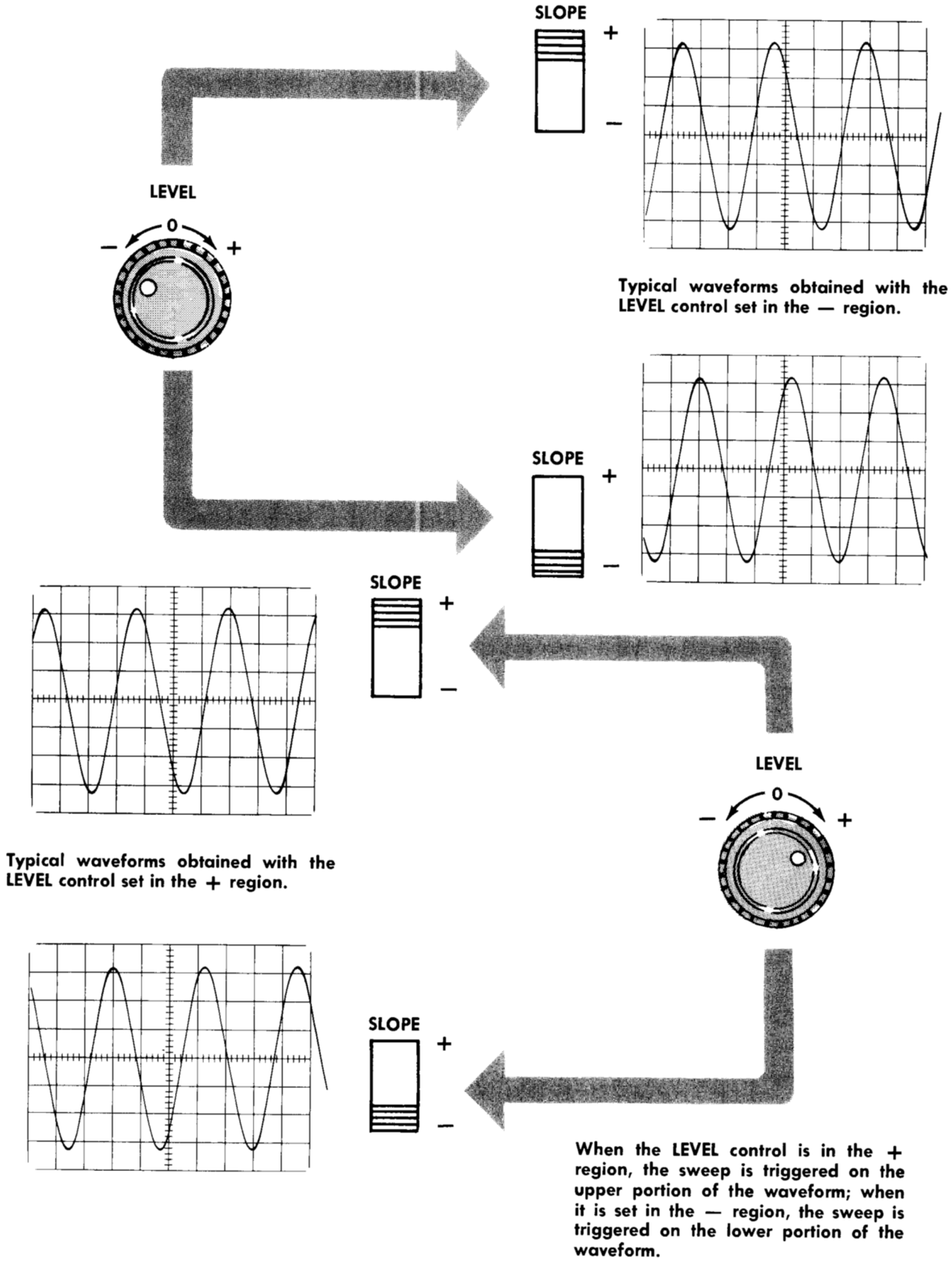

Fig. 3-2. Effects of SLOPE switch and LEVEL control.

http://manoman.sqhill.com

Type 504 Oscilloscope up for X-Y operation. In this mode of operation, input signals are normally applied to both the INPUT connector and the EXT. HORIZ. connector. The display is a graph of one signal versus the other. The Horizontal Amplifier has a maximum sensitivity of 0.5 volt per centimeter of deflection with the HORIZONTAL VARIABLE control set fully clockwise. The sensitivity can be reduced by turning this control counterclockwise. Normally, the sensitivity is calibrated only when the control is set fully clockwise.

APPLICATIONS

The following paragraphs describe procedures for making measurements of voltage, elapsed-time, frequency, and phase difference with the Type 504 Oscilloscope. No attempt has been made to describe any but the most basic techniques. Familiarity with the instrument will enable the operator to apply the essence of these techniques to a wide variety of applications, depending upon the problem at hand.

Voltage Measurements

To measure the potential difference between two points on a signal, proceed as follows:

1. Apply the signal to the INPUT connector and set the AC-DC-GND switch to AC.

2. Set the TRIGGER controls for a stable display.

3. Display the waveform over as large a portion of the screen as possible by adjusting the SENSITIVITY control. Make sure that the SENSITIVITY VARIABLE control is in the CALIBRATED position.

4. With the aid of the graticule, measure the vertical distance, in centimeters, between the two points on the waveform between which the voltage measurement is desired. On small voltage measurements, the width of the trace can make up an appreciable part of the entire measurement. For this reason, it is important to take all readings in a given measurement from the same side of the trace.

5. Multiply the distance between the two points by the setting of the SENSITIVITY control and by the attenuation factor, if any, of the probe. This is the potential difference between the two points on the waveform. Note that this technique can be used to measure peak-to-peak ac voltages.

To measure the difference in potential between two points on a signal applied to the EXT. HORIZ. connector, measure the horizontal difference between the two points and multiply this distance by 0.5 volts per centimeter. This applies only if the HORIZONTAL VARIABLE control is set fully clockwise.

To measure the dc level at some point on a signal, proceed as follows:

1. Apply the signal to the INPUT connector and set the AC-DC GND switch to GND.

2. Set the LEVEL control to AUTO.

3. With the VERTICAL POSITION control, position the trace so that it lies along one of the lines of the graticule. This line will be used as a ground reference line; its position in any given case will depend upon the polarity and amplitude of the input signal to be measured. Do not adjust the VERTICAL POSITION control after the reference line has been established.

4. Set the AC-DC-GND switch to DC. If necessary, adjust the LEVEL control for a stable display. If the waveform has moved off the screen, set the SENSITIVITY control to a higher setting (more counterclockwise) and repeat steps 3 and 4.

5. Measure the distance, in centimeters, from the ground reference line established in step 3 to the point at which the dc level is desired.

6. Multiply this distance by the setting of the SENSITIVITY control and the attenuation factor, if any, of the probe. This is the dc level of the point measured.

Elapsed-Time and Frequency Measurements

To measure the time interval between two points on a waveform, proceed as follows:

1. Apply the signal to the INPUT connector and set the oscilloscope control so that a stable display is obtained.

2. With the aid of the graticule, measure the horizontal distance, in centimeters, between the two points whose time interval you wish to find. Make sure that the SWEEP TIME/CM VARIABLE control is in the CALIBRATED position. There is some tendency toward distortion at the extreme edges of the graticule. For this reason, you should use only the center eight centimeters of graticule width for most accurate measuring. See Fig. 6-5.

3. Multiply the distance measured by the setting of the SWEEP TIME/CM control. This is the time interval between the two points measured.

To determine the frequency of a recurrent waveform, simply take the reciprocal of the time interval between corresponding points on two consecutive cycles of the waveform.

Phase-Difference Measurements

To measure the phase difference between two signals of the same frequency, proceed as follows:

1. Set the oscilloscope up for external triggered operation with one of the signals applied to the INPUT connector.

2. Horizontally position the display so that an easily identifiable point of a cycle coincides with one of the vertical graticule lines.

3. Without making any adjustments to the oscilloscope, disconnect the first signal and apply the second signal to the INPUT connector. (Normally, this can be done simply by moving the probe from one signal source to the other.) If there is a phase difference between the two signals, you will find that the display has shifted horizontally.

4. Measure the amount of horizontal shift of the display in centimeters.

5. Measure the distance in centimeters between corresponding points on two consecutive cycles of the waveform.

6. Divide the measurement obtained in step 4 by the measurement obtained in step 5 and multiply the result by 360°. This is the phase difference between the two signals.

http://manoman.sqhill.com

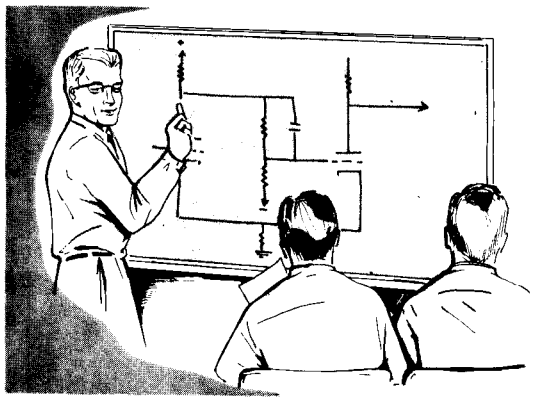

SECTION 4

CIRCUIT DESCRIPTION

A block diagram of the Type 504 Oscilloscope is shown in Fig. 4-1. In general, the operation of the instrument is as follows:

The signal to be displayed is amplified by the Vertical Amplifier and applied push-pull to the vertical deflection plates of the crt. A portion of the signal is "tapped off" in the Vertical Amplifier and applied to the Sweep Trigger as a triggering signal. Provisions are also made for applying an external signal or the ac line waveform, as desired, to the Sweep Trigger as a triggering signal. The Sweep Trigger generates a negative trigger pulse coincident with a selected point on each cycle of the triggering signal. The negative trigger pulse triggers the Sweep Generator which generates a positive-going sawtooth waveform. This sawtooth waveform is amplified by the Horizontal Amplifier and applied push-pull to the horizontal deflection plates to sweep the electron beam across the screen. If desired, the Sweep Generator can be disabled and an external signal applied directly through the Horizontal Amplifier to the horizontal deflection plates.

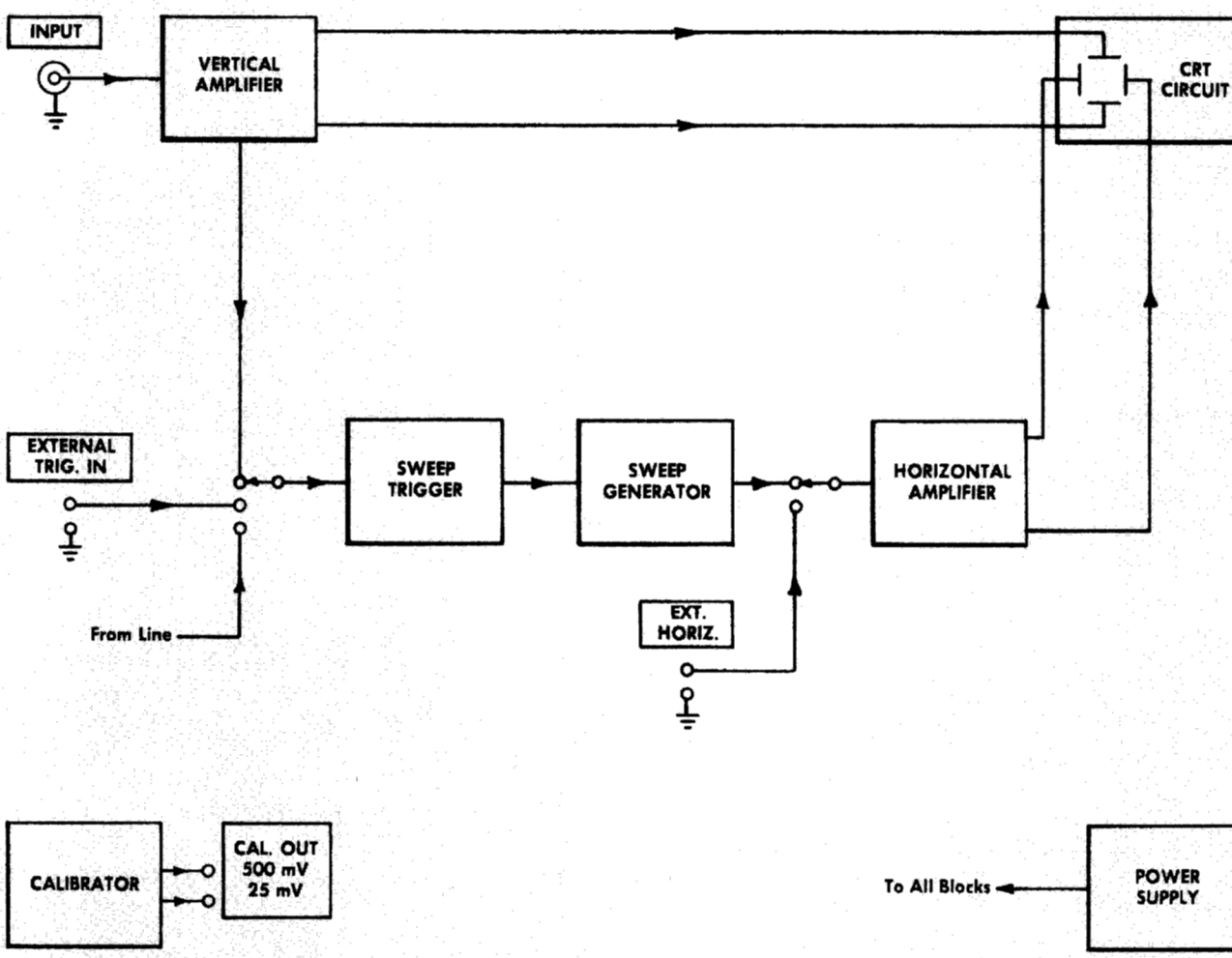

Fig. 4-1. Type 504 simplified block diagram.

http://manoman.sqhill.com

The Calibrator generates amplitude-calibrated square waves of 25 millivolts and 500 millivolts amplitude primarily for use in calibrating the gain of the Vertical Amplifier. The Power Supply supplies the regulated voltages and currents necessary for proper operation.

The remainder of this section discusses the operation of each of the circuits of the Type 504 Oscilloscope in detail. During these discussions, you should refer to the circuit diagrams contained in the Parts List and Schematic Diagrams booklet which accompanies this manual.

VERTICAL AMPLIFIER

General Description

The Vertical Amplifier consists basically of a two-stage Input Amplifier and a single-stage Output Amplifier. The maximum overall gain of the Vertical Amplifier is on the order of 4400, which provides the required 22 volts per centimeter of vertical deflection at the crt for each 5 millivolts of signal at the input (with the SENSITIVITY control in the 5 mV/CM position).

The first stage of the Input Amplifier is a cathode-coupled paraphase amplifier which converts the single-ended input to push-pull output. The second stage is o pair of transistors operated push-pull. The output from the Input Amplifier drives the Output Amplifier, which, in turn drives the crt vertical deflection plates. Step changes in Vertical Amplifier sensitivity are accomplished by changes in input attenuation and negative feedback in the Input Amplifier. Vernier sensitivity control is accomplished by degeneration in the cathode circuit of the Output Amplifier.

Input Circuit

The Input Switch, SW410, permits the input to the Vertical Amplifier to be either ac or dc coupled, or to be grounded. The lower bandpass limit of the input circuit when ac coupled is about 7.5 cps.

The signal at the input connector is applied either "straight through" or through either of two attenuators to the grid circuit of V434B. One of the attenuators attenuates the signal by a factor of 10, the other attenuates it by a factor of 100. These attenuators, combined with changes in resistance in the cathode circuit of the first stage of the Input Amplifier, provide the means of varying the effective sensitivity of the Vertical Amplifier, in steps, between 5 millivolts and 20 volts per centimeter of deflection.

The attenuators are both resistance and capacitance dividers which provide constant attenuation of the signal throughout the frequency range of the instrument. In addition to providing the proper degree of attenuation, the resistance and capacitance values of the attenuators are chosen or adjusted to provide a constant 1-megohm input resistance and 47-$\mu\mu$f input capacitance regardless of the setting of the SENSITIVITY control.

Input Amplifier

The gain of the Input Amplifier is varied (in steps) by changing the value of R408 in the cathode circuit of the first stage. This varies the amount of negative feedback applied to the first stage from the output of the second. This feedback is applied through R457 and R467 to the parallel network of R419 and L419 in series and R408. As the value of R408 is increased, the amount of the negative feedback voltage is increased, limiting the gain of the amplifier.

The DC BAL. control in the grid circuit of V434A provides the means of setting the potential of the cathode of V434A equal to the potential of the cathode of V434B when there is no input signal, so that there is no current through R408. This provides vertical stability of the no-signal trace as the value of R408 is changed by the SENSITIVITY control.

The second stage of the Input Amplifier is provided with a positive feedback path from the collector of each side to the base of the other. The amount of positive feedback is adjusted to varying the value of R460, which varies the gain of the stage. The overall negative feedback through the first stage of the amplifier prevents the second stage from oscillating. The effect of R460 is most pronouced in the 5 mV/CM position of the SENSITIVITY control since there is the least amount of overall negative feedback in this position.

Output Amplifier

The gain of the Output Amplifier is adjusted by means of the .2 V GAIN ADJ., R478, and the VARIABLE control, R488. Vertical positioning of the crt beam is accomplished by means of the cross-coupled dual POSITION potentiometer, R470. Adjustment of this control varies the current through the Output Amplifier tubes, thereby changing the average dc voltage at each of the plates inversely to the other. At the same time, through feedback in the Input Amplifier, the control also produces a small push-pull change in voltage at the grids of the Output Amplifier to maintain the cathodes at the same potential as the current is changed.

Trigger Pickoff

Part of the output from one side of the Output Amplifier is applied through a divider network to the SOURCE switch, SW5, in the Sweep Trigger. Thus, when the SOURCE switch is in the INT. position, a part of the displayed signal is applied to the Sweep Trigger to start the horizontal sweep.

SWEEP TRIGGER

The Sweep Trigger consists basically of the Trigger Input Amplifier, V24, and the Trigger Multivibrator, V45. The Trigger Input Amplifier amplifies (and, when desired, inverts) the incoming triggering signal and applies it to the input grid of the Trigger Multivibrator. The Trigger Multivibrator is a Schmitt circuit which is switched from one state to the other by the signal at its input. Its square-wave out-

http://manoman.sqhill.com

put is differentiated to form negative and positive spikes. The negative spikes are applied to the Sweep Generator to start the sweep. The positive spikes are bypassed to the +250-volt supply through diode D44.

Trigger Input Amplifier

The input to the Trigger Input Amplifier, V24, may be selected from any of three sources by means of the SOURCE switch, SW5. When the SOURCE switch is in the INT. position, the signal is obtained from the Trigger Pickoff circuit in the Vertical Amplifier. When the SOURCE switch is in the EXT. position, the signal may be obtained from an external source through the TRIGGER INPUT connector on the front panel. When the SOURCE switch is in the LINE position, the signal is obtained from one of the 6.3-volt secondary windings of the line transformer.

As will be seen later, the negative spike at the output of the Sweep Trigger occurs only when there is a negative-going signal at the input to the Trigger Multivibrator (output of the Trigger Input Amplifier). However, it is desired to be able to start the sweep during either a positive-going or negative-going portion of the incoming triggering signal as seen at the input to the Trigger Input Amplifier. To accomplish this, the SLOPE switch SW20 provides the means for inverting or not inverting, as desired, the triggering signal in the Trigger Input Amplifier.

When the SLOPE switch is in the — position, the incoming triggering signal is applied to the grid of V24A, and V24 is a cathode-coupled amplifier. Its output is in phase with its input. Thus, the negative-going portion of the signal at the input to the Trigger Multivibrator corresponds to the negative-going portion of the incoming triggering signal. So, the negative spike at the output of the Sweep Trigger will occur during a time when the triggering signal is moving in a negative direction.

When the SLOPE switch is in the + position, the incoming triggering signal is applied to the grid of V24B, and V24B acts as a plate-loaded amplifier. Its output is opposite in polarity to its input. Thus, the negative-going portion of the signal at the input to the Trigger Multivibrator corresponds to the positive-going portion of the incoming triggering signal. So, the negative spike at the output of the Sweep Trigger will occur during a time when the triggering signal is moving in a positive direction.

The LEVEL control, R17, varies the average dc level of the plate of V24B from about +70 volts to +130 volts. This is true whether SW20 is in the + position or — position. The minimum level of +70 volts represents the point where V24B is taken into saturation by a sufficiently positive setting of R17 when SW20 is in the — position, or by a sufficiently negative setting of R17 when SW20 is in the + position. The maximum level of +130 volts represents the point where V24B is taken into cutoff by a sufficiently negative setting of R17 when SW20 is in the — position, or by a sufficiently positive setting of R17 when SW20 is in the + position. As will be seen later, the voltage at the plate of V24B must pass through the approximate center of this range (about +100 volts) in order to cause the Trigger Multivibrator to change states.

For small triggering signals, R17 is set such that the average dc level of the plate of V24B is close to the center of its range. Then a small triggering signal, as amplified by V24, is sufficient to carry the plate voltage through the + 100-volt point. When a large triggering signal is applied and it is desired to trigger on an extreme positive or negative point of it, R17 is set such that V24B is well into saturation, or cutoff, depending on whether triggering is desired on a negative or positive point on the signal and on a negative or positive slope. In this case, the triggering signal must be large enough to overcome the saturation or cutoff of V24B and produce an additional 30 volts of swing at the plate of V24B in order to cause the Trigger Multivibrator to change states.

It should be noted that the voltages given in the foregoing discussion are typical nominals only and will vary somewhat from instrument to instrument and with time.

Trigger Multivibrator

The Trigger Multivibrator, V45, is a typical two-state Schmitt circuit. When the voltage at its input grid (grid of V45A) is above a certain critical level (neglecting hysteresis for the moment), the Trigger Multivibrator is in one state, with V45A conducting and V45B cut off. When the Trigger Multivibrator is in this state, the voltage at its output (plate of V45B) is +250 volts. When the voltage at the input grid is below the critical level (still neglecting hysteresis), the Trigger Multivibrator is in the other state, with V45A cut off and V45B conducting. When the Trigger Multivibrator is in this second state, the voltage at its output is about +230 volts. The transition from one state to the other occurs very rapidly regardless of how slowly the voltage at the input grid passes the critical level. Thus the output of the Trigger Multivibrator is a 20-volt square wave. The negative-going portion of the square wave occurs when the voltage at the input passes the critical level while moving in a negative direction; the positive-going portion of the square wave occurs when the voltage at the input passes the critical level while moving in a positive direction. As mentioned before, only the negative-going portion of the square wave is of significance timewise. By means of the SLOPE switch and the LEVEL control, this point can be made to coincide with virtually any point on the incoming triggering signal.

Actually, the input voltage level at which the Trigger Multivibrator changes states on a negative-going signal is slightly lower than the input voltage level at which it changes states on a positive-going signal. The difference between the two input voltage levels at which the two changes in state occur is the hysteresis of the circuit. To maintain stable triggering, the incoming triggering signal must be large enough that, when it is amplified by the Trigger Input Amplifier, it will have sufficient amplitude to overcome the hysteresis of the Trigger Multivibrator.

It will be seen in the discussion of the Sweep Generator that not every negative trigger pulse from the Sweep Trigger initiates a sweep. During sweep time, the negative trigger pulses have no effect on the Sweep Generator. It is only after a sweep has been completed and all circuits have returned to their quiescent state that the Sweep Generator will be re-triggered by the Sweep Trigger.

Automatic Triggering Mode

When the LEVEL control is turned fully counterclockwise,

http://manoman.sqhill.com

the AUTO. switch, SW17, is activated and converts the Trigger Multivibrator from a bistable configuration to an astable (free-running) configuration. This is accomplished by coupling the grid circuit of V45B to the grid circuit of V45A via R40. The time constant thus formed is such that, in the absence of a triggering signal, the Trigger Multivibrator free-runs at about 50 cps. However, since the triggering signals from the Trigger Input Amplifier are still coupled to the Trigger Multivibrator through C31, any triggering signal over 50 cps in frequency will produce synchronized operation of the Trigger Multivibrator at the triggering signal frequency. In the absence of any such triggering signal, the sweep continues to be triggered at a 50-cps rate. This provides a base line from which to make dc voltage measurements and also provides an indication that the instrument is adjusted to display any signal that might be applied to the INPUT connector.

SWEEP GENERATOR

The Sweep Generator, upon receipt of a negative trigger pulse from the Sweep Trigger, produces a linearly rising (sawtooth) voltage which is applied through the Horizontal Amplfier to the crt horizontal deflection plates. This causes the electron beam to move from left to right across the crt screen and form the sweep. The amplitude of the sawtooth voltage is about 100 volts. Its rate of rise is controlled by the values of the Timing Capacitor and Timing Resistor switched into the circuit by the SWEEP TIME/CM control on the front panel.

The Sweep Generator consists basically of three main circuits; the Sweep-Gating Multivibrator, the Miller Runup Circuit, and the Hold-Off Circuit. The Sweep-Gating Multivibrator consists of V135A, V135B, V145A and associated circuitry. The essential components of the Miller Runup Circuit are: the Miller Tube, V160A; the Runup Cathode Follower, V160B; the Disconnect Diodes, V152A and V152B; the Timing Capacitor, C160; and the Timing Resistor, R160. The Hold-Off Circuit consists of the Hold-Off Diode, V152C; the Hold-Off Cathode Follower, V145B; the Hold-Off Resistor, R181; and the Hold-Off Capacitance, C181 and C160 (the Hold-off Circuit makes use of some of the same timing capacitors as the Miller Runup Circuit).

Sweep Generation

In the quiescent state—that is, when no sweep is being generated—V135A is conducting and V145A is cut off. The plate of V145A is at about —2.5 volts with respect to ground. The Disconnect Diodes are conducting and hold both sides of the Timing Capacitor at about —2.5 volts. With its cathode grounded and its grid at —2.5 volts, V160A is conducting heavily and its plate is at about +30 volts.

A negative trigger pulse, arriving at the grid of V135A from the Sweep Trigger, causes the Sweep-Gating Multivibrator to switch rapidly to its other state. That is, V135A cuts off and V145A conducts. As V145A conducts, the increased current through the common cathode resistor, R144, raises the cathode voltage of the two tubes. This holds V135A in cutoff after the negative trigger pulse has passed. Since V135A is now in cutoff, further trigger pulses arriving at its grid will have no effect on the circuit until after the sweep has been completed and the grid has been returned to its quiescent level by the Hold-Off Circuit. Thus the sweep is actually triggered at a submultiple of the triggering signal, provided the sweep time is significantly greater than the period of the triggering signal.

As V145A conducts, its plate voltage goes down, cutting off the Disconnect Diodes. When the Disconnect Diodes cut off, the plates of the Timing Capacitor are no longer held at —2.5 volts, and the Timing Capacitor starts to charge toward the instantaneous potential difference between the —100-volt supply and the potential on the cathode of V160B. However, as the lower plate of the Timing Capacitor starts to move in a negative direction, it takes the grid of V160A with it. This produces a positive swing at the plate of V160A which is coupled, through B167 and V160B, to the upper plate of the Timing Capacitor. This positive swing on the upper plate tends to prevent the lower plate from swinging negatively. It also increases the voltage to which the Timing Capacitor is trying to charge. The effect is to "straighten out" the charging curve by increasing the charging voltage with each increment of charge on the capacitor. Since the gain of V160A is about 200, the potential on the upper plate moves about 100 volts with respect to ground while the potential on the lower plate moves about one-half volt. The result is an extremely linear sawtooth at the cathode of V160B, which is applied through the Horizontal Amplifier to the horizontal deflection plates of the crt.

Sweep Length

The length of the sweep—that is, the distance the spot moves across the screen—is determined by the setting of the SWP. LENGTH adjustment, R176. As the sweep voltage rises at the cathode of V160B, there is proportionate rise in voltage at the wiper arm of the SWP. LENGTH adjustment. This increases the voltage at the plate, and therefore the cathode, of V152C and at the grid and cathode of V145B. As the voltage at the cathode of V145B rises, the voltage at the grid of V135A also rises. When the voltage at the grid of V135A rises to the point where V135A comes out of cutoff, the Sweep-Gating Multivibrator reverts rapidly to its original state, with V135A conducting and V145A cut off. The voltage at the plate of V145A rises, carrying with it the voltage at the plates of the Disconnect Diodes.

V152B starts conducting, and forms a discharge path for the Timing Capacitor, through R147, the —100-volt power supply, and the cathode resistance of V160B. This brings the grid of V160A quickly back up to its quiescent level. The rise in voltage at the grid causes the tube to conduct more, so the plate voltage drops, carrying with it the grid and cathode of V160B. When the voltage at the cathode of V160B returns to about —2.5 volts, V152A conducts, clamping the voltage at this point. The circuit has now returned to its quiescent level and is ready for the next trigger.

Hold-Off

The Hold-Off Circuit prevents the Sweep Generator from being triggered until after the Miller Runup Circuit has stabilized in the quiescent condition following the previous sweep. It does this by holding the grid of V135A positive enough to keep V135A in conduction.

During sweep time, the rising voltage at the cathode of V152C charges up the Hold-Off Capacitance, C160 and

http://manoman.sqhill.com

C181. Then, at the end of the sweep, the voltage at the plate of V152C drops suddenly and the cathode tries to follow it. The cathode however, is held up by the charge on the Hold-Off Capacitance which must discharge exponentially through the 4.7-M Hold-Off Resistor, R181. This, then, holds the grid and cathode of V145B and the grid of V135A high enough to hold V135A in conduction for a length of time determined by the time constant of the Hold-Off Capacitance and the Hold-Off Resistor. The amount of hold-off time required is determined, in general, by the sweep rate. For this reason, the SWEEP TIME/CM control changes the amount of capacitance in the Hold-Off Circuit simultaneously with that of the Timing Circuit.

Sweep Stability

The SWEEP STABILITY ADJUST, R111, regulates the quiescent dc level of the grid of V135A. This potentiometer (a front panel adjustment) is adjusted so that after the decay of the hold-off voltage the grid of V135A is just high enough (with the FREE RUN switch open) to hold V135A in conduction. In this case, a sweep can be produced only when a negative trigger pulse from the Sweep Trigger drives V135A into cutoff. Turning the LEVEL control fully clockwise closes the FREE RUN switch and shorts out R111. This places a more negative voltage on the grid of V135A such that V135A cuts off upon decay of the hold-off voltage and the next sweep is initiated immediatey (no trigger pulse is necessary). The result is a free-running sweep whose period is the total of the sweep time plus the hold-off time at any given setting of the SWEEP TIME/CM control. (This is compared to a fixed repetition rate of about 50 cps when the LEVEL control is turned fully counterclockwise to the AUTO. position to make the Trigger Multivibrator in the Sweep Trigger free run.)

Unblanking

The positive rectangular pulse appearing at the cathode of V135B during sweep time is applied as an unblanking pulse to the crt. Action of this pulse is discussed under the description of the Crt Circuit later in this section. It should be noted that, when the SWEEP TIME/CM control is in the HORIZ. AMPLIFIER position, the Sweep-Gating Multivibrator is disabled, and there is no current flowing through V135A or V145A. Therefore, the cathode of V135B is held at a potential of about +205 volts and the crt is continuously unblanked.

HORIZONTAL AMPLIFIER

The Horizontal Amplifier is a cathode-coupled paraphase amplifier which converts a single-ended input to a push-pull output and applies it to the horizontal deflection plates of the crt. When the SWEEP TIME/CM control is in any position but the HORIZ. AMPLIFIER position, the sawtooth waveform from the Sweep Generator is applied through a divider network to the grid of V374. When the SWEEP TIME/CM control is in the HORIZ. AMPLIFIER position, the grid of V374 is connected through the HORIZONTAL VARIABLE control, R310, to the EXT. HORIZ. connector on the front panel. This provides a means of applying an external signal to the horizontal deflection plates.

The Horizontal Amplifier has a nominal sensitivity of 0.5 volt per centimeter of deflection with the HORIZONTAL VARIABLE control set fully clockwise. The gain can be adjusted by means of the SWP. CAL. adjustment, R379.

Horizontal positioning is accomplished by varying the dc level of the grid of V384 by means of the HORIZONTAL POSITION control, R361. This varies the average dc level of the two plates of the amplifier inversely to one another.

CRT CIRCUIT

The crt in the Type 504 Oscilloscope makes use of an extra set of deflection plates for unblanking during sweep time. One of these plates has a fixed potential of about +225 volts on it; the other is tied to the cathode of V135B in the Sweep Generator. Quiescently, this latter plate is held at a relatively low potential, in the vicinity of +80 volts. Therefore, the electron beam in the crt is deflected forward and absorbed by the +225-volt plate; none of it reaches the screen. During sweep time, however, the unblanking pulse from V135B raises the potential of the second plate from +80 volts to about +205 volts which permits the beam to pass on through to the crt screen.

The INTENSITY control varies the control grid of the crt from about —20 volts to —150 volts with respect to the cathode. Connections are provided on the rear of the oscilloscope cabinet to couple an ac signal to the control grid to provide intensity modulaton of the trace if desired.

CALIBRATOR

The Calibrator provides a 25-millivolt square wave and a 500-millivolt square wave for use in calibrating the gain of the Vertical Amplifier. The two amplitudes are obtained by tapping off at different points in a voltage divider network.

The square wave is produced by the turning off and on of B886. This is accomplished by the combined action of B886, B883, and C883. B886 and B883 are neon tubes which nominally drop about 60 volts when they are conducting. However, if they are not conducting, they require about 80 volts across them to start conduction.

During the time that B886 is turned off, B883 is conducting. This causes C883 to discharge, which allows both plates of B883 to move in a positive direction (60 volts apart). When the common connection at the top of the two neon tubes reaches a potential of about +80 volts with respect to ground, B886 conducts. The current through R886 and R887 produces a 500-millivolt drop across them and the voltage at the upper end of B886 is, therefore, about +60.5 volts with respect to ground. Since the upper plate of C883 is now at about +20 volts with respect to ground, the potential across B883 is only about 40 volts, and B883 stops conducting. With no current through B883 to maintain or build up the charge on C883, the upper plate of C883 starts to move in a negative direction. The upper end of B883 is held steady at +60.5 volts by the drop across B886, R886, and R887, so when the potential on the upper plate of C883 becomes —20 volts with respect to ground, B883 conducts. This drops the voltage at the upper end of the two neon tubes to about +40 volts, and B886 cuts off, completing one cycle of the square wave.

http://manoman.sqhill.com

It should be noted that the potentials mentioned in the foregoing discussion (except the drop across R886 and R887) are typical nominals only, and may vary considerably among different units. The only effect will be a slight variation in the frequency and symmetry of the output waveform.

The CAL. ADJ. adjustment, R880, provides a means of adjusting the voltage drop across R886 and R887 to exactly 500 millivolts by controlling the current through them.

POWER SUPPLY

T601 provides B+ voltage (about 500 volts) for the power supply oscillator tube, V620, and filament power for the graticule lights and all of the tubes, except the first stage of the Input Amplifier. The rest of the voltages used in the oscilloscope are provided by the secondary of T620.

V620, the primary of T620, and part of the secondary of T620 form an Armstrong oscillator circuit to drive T620 at about 25 kc. Each of the outputs of the secondary of T620 bears a fixed turns ratio to the others such that a change in one effects a proportional change in each of the others. Adjustment and regulation of all of the output voltages, then, is accomplished through adjustment and regulation of just one output, the —100-volt output. This, in turn, is referenced to the 85-volt drop across the voltage regulator tube, V659.

Adjustment of the output voltages is accomplished by means of the —100 ADJ., R641. Moving the wiper arm of this adjustment in a positive direction reduces the bias on V634B. This, in turn lowers the voltage at the plate of V634B and, therefore, at the grid of V634A. This causes an increase in voltage at the plate of V634A which, in turn, increases the screen voltage of V620. Increasing the screen voltage of V620 increases the G_m and therefore the gain, of the tube, and thereby increases the amplitude of oscillations in the secondary of T620. This results in a greater output from all of the supplies.

Regulation is accomplished in virtually the same manner. A lowering of the source voltage to which the oscilloscope is connected, or a lowering of any of the output voltages due to loading, causes the volts per turn in the secondary of T620 to decrease. This causes the —100-volt supply to drop (move positively) with the resulting rise in the grid voltage of V634B. This results, as before, in a rise in the screen voltage of V620 and an increase in the amplitude of oscillations, bringing the power supply outputs back to their nominal values.

An increase in any of the output voltages, whatever the reason, has the opposite effect on the screen voltage of V620 and decreases the amplitude of oscillations in T620.

Regulation of the power supply outputs will be accomplished as long as the source voltage remains within the limits described in Section 2 of this manual.

http://manoman.sqhill.com

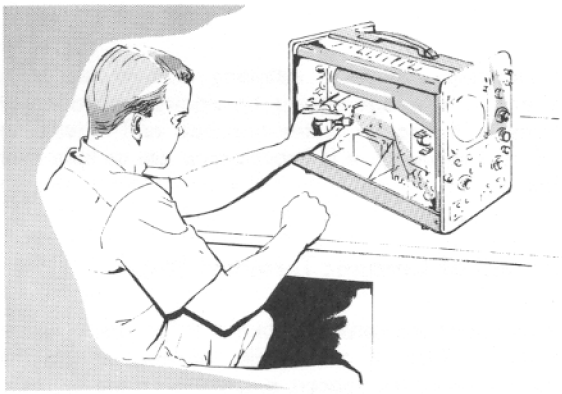

SECTION 5

MAINTENANCE

Preliminary Instructions

PREVENTIVE MAINTENANCE

Visual Inspection

The oscilloscope should be visually inspected periodically for possible impending circuit defects or mechanical damage which might lead to circuit defects. This would include such things as loose or broken connections, damaged binding posts, improperly seated tubes, scorched wires or resistors, missing tubes shields, and broken terminal strips. For most visual troubles the remedy is apparent; however, particular care must be taken when heat-damaged components are detected. Overheating of parts is often the result of other, less apparent, defects in the circuit. It is essential to determine the cause of overheating before replacing heat-damaged parts, in order to prevent further damage.

Calibration

The Type 504 Oscilloscope is a stable instrument which should provide many hours of trouble-free operation. However, to insure the reliability of measurements we suggest that you calibrate the instrument after each 500 hours of operation (or every six months, if used intermittently). A complete step-by-step procedure for calibrating the instrument is presented in the Section 6 of this manual.

REMOVAL AND REPLACEMENT OF PARTS

General Information

Procedures required for replacement of most parts in the Type 504 Oscilloscope are obvious. Detailed instructions for their removal are therefore not required. Other parts, however, can best be removed if a definite procedure is followed. Instructions for the removal of these parts are contained in the following paragraphs. Any time a tube or component is replaced in a circuit, that circuit and/or any others affected by its output should be recalibrated.

Removal of Side Panels

The side panels of the Type 504 Oscilloscope are held in place by small screwhead fasteners. To remove the side panels, use a screwdriver to rotate the fasteners approximately two turns counterclockwise; then pull the upper portion of the panels outward from the carrying handles (see Fig. 5-1). When replacing the panels, be sure that the bottom edge is properly positioned behind the bottom rails before fitting the top into place.

Replacement of the Cathode-Ray Tube

To remove the cathode-ray tube, first disconnect the tube socket and all leads connected to the neck of the tube. Remove the graticule cover, spacer washers, graticule, and graticule light shield. Loosen the tube clamp at the base of the crt. Push on the base of the crt and pull the crt straight out through the front panel (see Fig. 5-2).

When the new crt is in place, the leads can be properly connected to the neck of the tube by following the color code information provided on the tube shield. Any time a crt has been changed, you should check the calibration of the vertical gain and the sweep timing according to the procedures described in Section 6 of this manual.

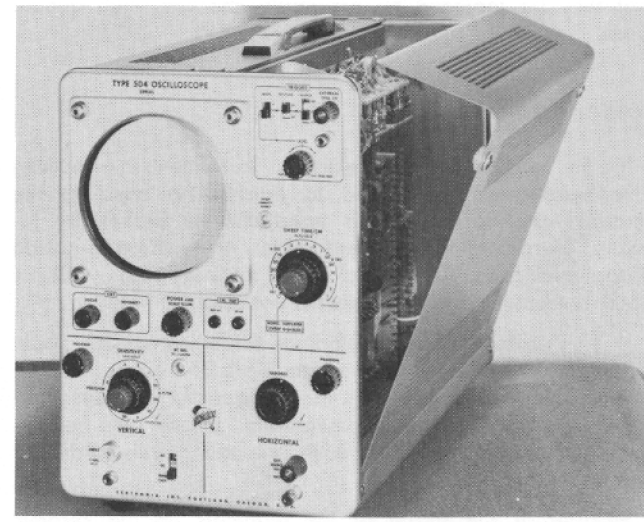

Fig. 5-1. Removing the oscilloscope side panels.

http://manoman.sqhill.com

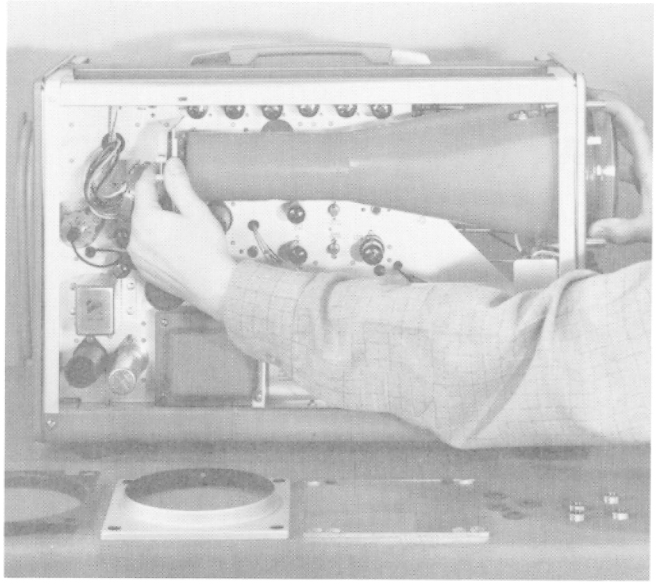

Fig. 5-2. Removing the cathode ray tube.

Replacement of Switches

Methods for removal of defective switches are, for the most part, obvious and only a normal amount of care is required. Single wafers are normally not replaced on the switches used in the Type 504. If one wafer is defective, the entire switch should be replaced. Switches can be ordered from Tektronix, either wired or unwired, as desired.

Tube Replacement

Tubes should not be replaced unless they are actually causing trouble. Often during routine maintenance it will be necessary to remove tubes from their sockets. It is important that each tube be returned to its original socket unless it is actually defective. Unnecessary replacement or switching of tubes will often necessitate recalibration of the instrument. If tubes require replacement, it is recommended that they be replaced by previously checked, high quality tubes.

Soldering Precautions

In the production of Tektronix instruments, a special silver-bearing solder is used to establish a bond to the ceramic terminal strips. This bond can be broken by repeated use of ordinary tin-lead solder, or by the application of too much heat. Occasional use of ordinary solder will not break the bond if too much heat is not applied.

It is advisable to have a stock of solder containing about 3% silver if you frequently perform work on Tektronix instruments. This type of solder is used frequently in printed circuitry and should be readily available. It may also be purchased directly from Tektronix in one-pound rolls (order by part number 251-514).

Because of the shape of the terminals on the ceramic terminal strips, it is advisable to use a wedge-shaped tip on your soldering iron when installing or removing parts from the strips. A wedge-shaped tip allows you to apply heat directly to the solder in the terminals and reduce the amount of heat required. It is important to use as little heat as possible.

Replacement of Ceramic Terminal Strips

To remove damaged ceramic terminal strips, first unsolder all connections. Then, if accessibility permits, cut off the protruding portion of the spacers and yokes on the opposite side of the chassis (see Fig. 5-3). Pull the entire assembly (strip, yokes, spacers) away from the chassis. If the assembly is difficult to remove or if the protruding portion of the spacers and yokes cannot be cut off, use a mallet and a punch to knock the yokes and spacers through from the other side.

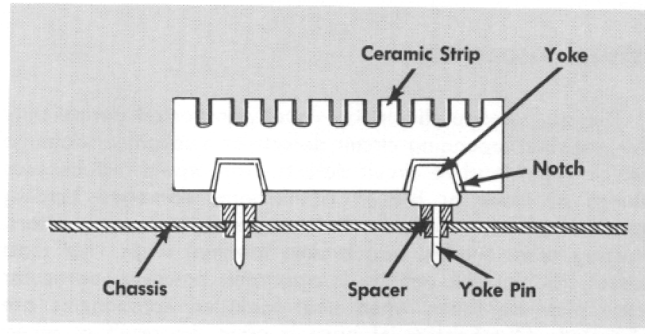

Fig. 5-3. Ceramic terminal strip mounted in chassis.

When installing new ceramic strips, place the spacers in the chassis holes first, then insert the yoke pins through the spacers. Using a plastic or hard rubber mallet, tap the ceramic strip lightly above the yokes to seat the yokes firmly in the spacers. If desired, the extending portion of the yoke pins may be cut off to within about an eighth of an inch of the lower end of the spacers.

Be sure to observe the soldering precautions described earlier in this section when resoldering connections on the ceramic terminal strip.

REPLACEMENT PARTS

Standard Parts

Replacements for all parts used in the Type 504 Oscilloscope can be purchased directly from Tektronix at current net prices. However, since most of the components are standard electronic parts, they can generally be obtained locally in less time than required to obtain them from the factory. Before ordering or purchasing parts, be sure to consult the parts list to determine the tolerances and ratings required. The parts list gives the values, tolerances, ratings and Tektronix part number for all components used in the instrument.

http://manoman.sqhill.com

Special Parts

In addition to the standard electronic components mentioned in the previous paragraph, special parts are also used in the assembly of the Type 504 Oscilloscope. These parts are manufactured or selected by Tektronix to satisfy particular requirements. Occasionally they are manufactured especially for Tektronix by other companies in accordance with Tektronix specifications. These parts, and most mechanical and structural parts, should be ordered directly from Tektronix since they are normally difficult or impossible to obtained from other sources. All parts may be obtained from the local Tektronix Field Office or Representative.

Parts Ordering Information

Each part in the Type 504 Oscilloscope has a 6-digit Tektronix part number. This number and a description of the part will be found in the parts list. When ordering parts, be sure to include the following information:

1. A description of the part.
2. The part number.
3. The instrument type and serial number (and Mod. number, if any).

For example, a certain resistor should be ordered as follows: R143, 25.6K, ½watt, fixed resistor, tolerance 1%, part number 309-136 for a Type 504 Oscilloscope, serial number _____. When parts are ordered in this manner, we are able to fill your orders promptly, and delays that might result from transposed numbers in the part number are avoided.

NOTE

Always include the instrument Type and SERIAL NUMBER (and Mod. number) in any correspondence concerning this instrument.

Since the production of your instrument, some of the parts may have been superseded by new or improved components. In such cases, the part numbers of these new components will not be listed in the Parts List. However, if you order a part from Tektronix and it has been superseded by a new component, the new part will be shipped in place of the part ordered. Your local Tektronix Field Engineering Office has knowledge of these changes any may call if a change in your purchase order is necessary.

Replacement information sometimes accompanies the new components to aid in their installation.

Troubleshooting Information

The troubleshooting information presented here is divided into two parts, Circuit Isolation and Circuit Troubleshooting. It is intended, in general, that upon encountering a trouble in the oscilloscope you will refer to the Circuit Isolation information first. This will help you to isolate the trouble to one of the major circuits of the oscilloscope. Then you will refer to the troubleshooting instructions for that particular circuit in the Circuit Troubleshooting information following. This will help you to isolate the trouble to one of the stages within the circuit. General troubleshooting instructions are presented as appropriate at the beginning of the two parts.

CIRCUIT ISOLATION

This part of the Troubleshooting Information lists most of the trouble symptons which may be encountered in the Type 504 Oscilloscope and describes procedures for isolating the troubles to particular circuits. In most cases, simple front panel operations and observations can be made to determine which circuit is defective; in other cases, internal checks or measurements are required.

Whenever an apparent trouble is isolated to a particular stage, you should first try to adjust the calibration of the circuit, if possible, according to the procedures described in Section 6 of this manual. Many apparent troubles are merely the result of improper calibration.

Inadequate or incorrect Power Supply voltages can sometimes cause troubles which seem to bear no relationship to the Power Supply, but seem instead to be due to a malfunction of some other circuit. For this reason, it is usually a good idea to check the Power Supply output voltages first when it has been definitely established that a trouble does exist in the oscilloscope. If you find that one or more of the Power Supply voltages are not correct, you should refer to the paragraph on Troubleshooting the Power Supply in the last part of this section.

Remember, any time a component or tube is replaced in a circuit, that circuit and other circuits affected by its output must be recalibrated.

No Trace

If no trace appears on the screen when the oscilloscope is properly set up for triggered operation, turn the LEVEL control to FREE RUN, both POSITION controls to midrange, the SENSITIVITY control to 20 VOLTS/CM, the AC-DC-GND switch to GND, and the INTENSITY control fully clockwise.

CAUTION

Be ready to turn the INTENSITY control down quickly when a trace or spot does appear to prevent possible damage to the crt screen.

If a trace now appears, try to adjust the sweep stability according to the procedure given in Section 6 of this manual. If it is not possible to adjust the sweep stability as described in the procedure, the trouble is in the Sweep Trigger. If a trace does not appear when the controls are set as described above, set the SWEEP TIME/CM control to HORIZ. AMPLIFIER. If a spot now appears, the trouble is in the Sweep Generator. If no spot appears, short the crt vertical deflection plates together at the crt neck pins. If a spot now appears, the trouble is a dc unbalance in the Vertical Amplifier. If no spot appears, remove the shorting strap and short the crt horizontal deflection plates together at the crt neck pins.

http://manoman.sqhill.com

If a spot now appears, the trouble is a dc unbalance in the Horizontal Amplifier. If a spot does not appear, remove the shorting strap and check the voltage at pin 3 of V135. If this is about +205 volts, the trouble is in the Crt Circuit. If the voltage at pin 3 is significantly lower than +205, the trouble is in the Sweep Generator.

Short Trace

If the trace is shorter than normal, and cannot be set at the proper length with the SWP. LENGTH adjustment, set the SWEEP TIME/CM control to HORIZ. AMPLIFIER and the HORIZONTAL VARIABLE control fully clockwise. Apply the 500-millivolt Colibrator signol directly to the EXT. HORIZ. connector. If one centimeter of horizontal deflection is obtained, the trouble is in the Sweep Generator or in the divider (R191, R192, R193) at the sweep input to the Horizontal Amplifier. If one centimeter of horizontal deflection is not obtained, the trouble is in the Horizontal Amplifier.

Unstable Triggering

If unstable triggering can be obtained but stable triggering cannot (waveform is displayed, but will not remain stationary), check the triggering control settings first. If all the triggering controls are set properly and the triggering is still not stable, adjust the sweep stability according to the procedure given in Section 6 of this manual. If this does not cure the trouble, or if it is not possible to adjust the sweep stability according to the procedure, the trouble is in the Sweep Trigger. If the trace free-runs with no triggering signal applied and cannot be turned off with the LEVEL control, then the trouble is in the Sweep Generator.

Insufficient Vertical Deflection

If there is insufficient vertical deflection on the crt screen, or no vertical deflection at all, the trouble is in the Vertical Amplifier. If the vertical deflection is correct at the middle of the crt screen, but decreases as the trace is moved up or down, the trouble may also be in the Crt Circuit. However, you should check the Output Amplifier in the Vertical Amplifier before investigating the Crt Circuit.

Waveform Distortion

A certain amount of waveform distortion is normal, especialy on fast-changing waveforms. However, an abnormal amount of waveform distortion indicates a trouble in the Vertical Amplifier.

Improper Crt Geometry and Spurious Crt Spots

If waveforms are consistently bowed near the sides and top and bottom of the crt screen, the trouble is in the Crt Circuit, probably within the crt itself. The same is true if there are spurious spots or halos on the face of the crt which cannot be completely extinguished with the INTENSITY control.

Improper Sweep Timing

If the sweep timing is incorrect in some, but not all, positions of the SWEEP TIME/CM control, one or more of the timing resistors or capacitors in the sweep timing circuit have changed in value. By comparing the control positions in which the timing is incorrect with the Timing Switch circuit diagram, you will be able to determine which component or components are probably faulty.

If the sweep timing is incorrect in all positions of the SWEEP TIME/CM control, try to adjust the sweep timing according to the procedure described in Section 6. If this does not cure the trouble, set the SWEEP TIME/CM control to HORIZ. AMPLIFIER, the HORIZONTAL VARIABLE control fully clockwise, and apply the 500-millivolt output of the Calibrator directly to the EXT. HORIZ. connector. A one-centimeter-long horizontal trace should appear on the screen. Position this trace across the screen with the HORIZONTAL POSITION control. If the trace remains one centimeter long no matter where it is placed horizontally on the screen, the trouble is in the Sweep Generator. If the trace is not one centimeter long or if it varies in length as it is moved from one side of the screen to the other, the trouble is in the Horizontal Amplifier. If the trace is one centimeter long when it is placed in the center of the screen but decreases in length as it is moved toward either side, the trouble may be in the Crt Circuit. However, you should check the Horizontal Amplifier before investigating the Crt Circuit.

CIRCUIT TROUBLESHOOTING

This portion of the section contains troubleshooting procedures for locating a defective stage within a given circuit to which a trouble has been isolated. Once the defective stage is identified, a visual check of the components of that stage should be performed, even if such was performed on the entire circuit earlier. Normally, if a visual check fails to reveal the cause of the malfunction, the next step should be to check the tube or tubes of the stage. This should be done only by substitution, never by tube checker. A tube checker cannot satisfactorily indicate how well a given tube will perform in a given circuit. If there is more than one tube in the stage, the best method of checking them is to change all of them. Then, if this cures the trouble, substitute the original tubes back into the stage to determine the faulty one. This will save time and trouble if more than one tube in a stage is bad. Always replace tubes found to be good to their original sockets; this can eliminate the need for unnecessary recalibration.

If replacement of the tube or tubes in a stage does not cure the trouble, check the remainder of the circuit by voltage and resistance checks. Typical voltages to be encountered at many points throughout the oscilloscope are given on the circuit diagrams in the Parts List and Schematic Diagrams booklet which accompanies this manual. It should be noted that these voltages are typical nominals only and may vary somewhat from instrument to instrument.

If a test oscilloscope is available, troubleshooting may be performed by signal tracing through the various circuits of the Type 504. Typical waveforms to be encountered at various points throughout the instrument are also given on the circuit diagrams.

http://manoman.sqhill.com

Troubleshooting the Power Supply

Proper operation of every circuit in the Type 504 Oscilloscope depends upon proper operation of the Power Supply. The output voltages must remain within their specified tolerances for the instrument to maintain its calibration.

No Output Voltage. If there is no output voltage from any of the power supply circuits and the graticule lamps and tube filaments are not glowing, the trouble is in the primary circuit of the line transformer, T601. Check for a blown fuse, for proper operation of the POWER AND SCALE ILLUM. switch, and for open primary windings.

If there is no output voltage from any of the power supply circuits but the graticule lamps do light, then the trouble is in the high-voltage secondary of T601 or in the high-voltage oscillator (V620). Measure the voltage at the junction of D612 and C612 (see Fig. 6-3). If the voltage here is less than about 400 volts, the trouble lies in the secondary winding of T601 or in the voltage doubler circuit made up of C611, C612, D611, and D612. If the voltage is about 550 volts or more, the trouble lies in the oscillator. Before replacing V620, check R621, C620, C621 and the secondary of T620; if any of these components are faulty they could cause V620 to burn out.

If the proper output voltage is obtained from at least one of the power supply circuits, the oscillator is operating properly and need not be checked. In this case, you should check the rectifier and other components associated with the inoperative supply or supplies.

Failure to Regulate at the Correct Voltage. If the supplies fail to regulate at the proper voltages, first check to see that the line voltage to which the oscilloscope is connected is within the specified limits (see Section 2 of this manual). If the line voltage is correct and the outputs of the Power Supply are off by only a small amount, it may be possible to bring them within tolerances by adjusting the —100 ADJ. adjustment. It should be noted, however, that whenever the setting of the —100 ADJ. adjustment is changed, the entire instrument must be recalibrated.

If the supplies cannot be brought into proper regulation with the —100 ADJ. adjustment, check all the Power Supply tubes by substitution. If this does not cure the trouble, check the voltage at the junction of C612 and D612 (see Fig. 6-3). It should be about +500 volts. Also check the resistances and capacitances in the regulator circuit.

If there is excessive ripple on any of the supplies but not on others, check for open or leaky capacitors in the faulty circuit.

Troubleshooting the Vertical Amplifier

No Trace. If a spot or trace appears on the screen when the vertical deflection plates are shorted together but disappears when the short is removed (with the VERTICAL POSITION control set at midrange), the Vertical Amplifier is in a state of dc unbalance. First, try to adjust the Vertical Amplifier dc balance according to the procedure described in Section 6. If this does not cure the trouble, set the SENSITIVITY control to the .2 VOLTS/CM position. Then, with the insulated shorting strap, short between the pairs of points

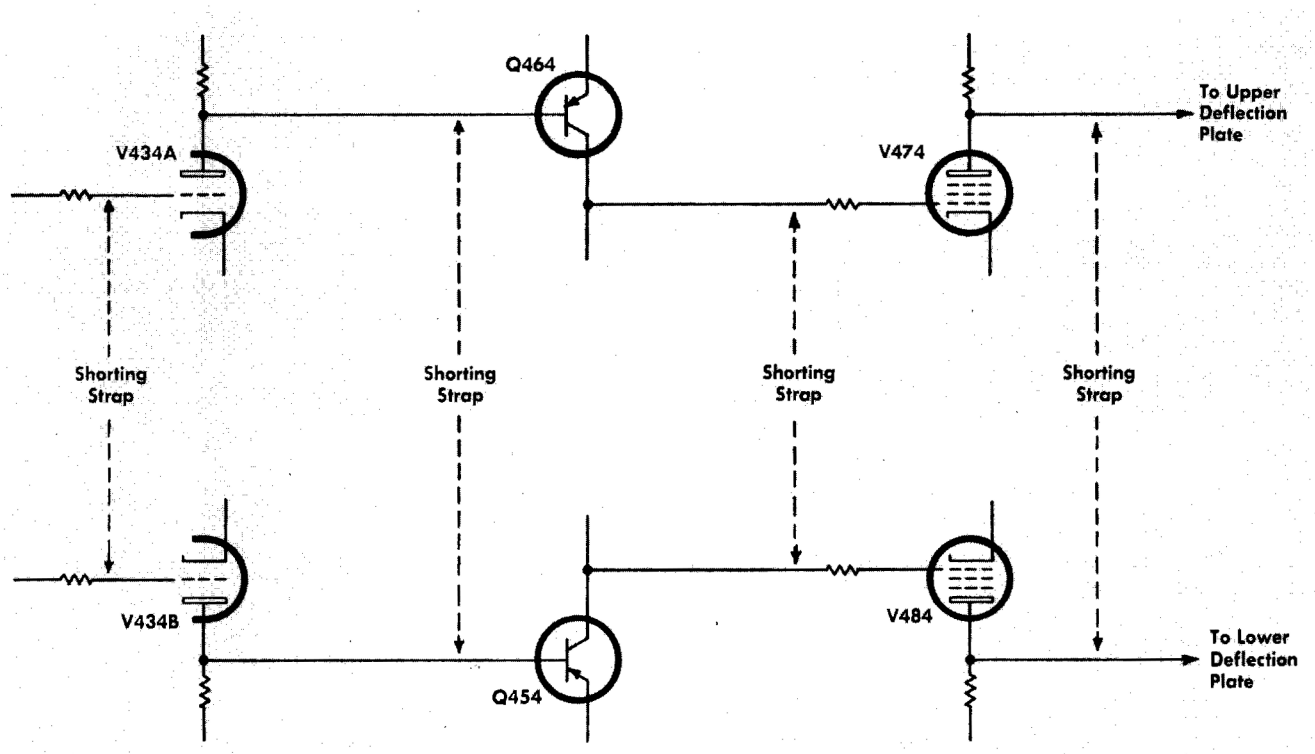

Fig. 5-4. Checkpoints for isolating Vertical Amplifier dc unbalance.

http://manoman.sqhill.com

shown in Fig. 5-4, starting at the right and progressing toward the left. As you short between the points in turn, the spot should appear on the screen as the connections are made. You may have to adjust the VERTICAL POSITION control when shorting between the grids and plates of V434. When you reach a point where the spot cannot be positioned on the screen when the connections are made, the stage immediately following this point is at fault.

Insufficient Vertical Deflection. If the change in vertical deflection is small, try to recalibrate the Vertical Amplifier sensitivity according to the procedure described in Section 6 of this manual. If the Vertical Amplifier sensitivity cannot be properly calibrated, check the tubes by substitution. If this does not cure the trouble, check the components which can affect the gain of the amplifier but not the dc balance. Such parts are common cathode resistors and common emitter resistors. The gain of the Output Amplifier should be about 40.

Waveform Distortion. Waveform distortion can be divided into two categories—low frequency and high-frequency. If a square wave is displayed on the crt screen, the type of distortion can be determined by the shape of the displayed waveform. High-frequency distortion will primarily affect only the leading and trailing edges of the waveform while low-frequency distortion will primarily affect the mid-portion of the waveform.

Waveforms showing low-frequency distortion and two types of high-frequency distortion are shown in Fig. 5-5. The shape of these waveforms will vary widely, however, with the cause of the distortion and the frequency of the applied square wave. A nominal amount of low-frequency distortion is normal for very low input frequencies when ac coupling is used, and a nominal amount of high-frequency distortion is normal at the upper frequency limits of the instrument. It is only when this distortion becomes excessive in the normal frequency range of the instrument that it constitutes a trouble.

Low-frequency distortion is usually caused by a change in the time constant of the input coupling circuit. This, in turn, is usually caused by a tube becoming gassy and drawing grid current. So when low-frequency distortion is encountered check the three tubes in the Vertical Amplifier by substitution.

In all cases of high-frequency distortion, you should first check the compensation of the probe you are using, if any, and then check the Vertical Amplifier high-frequency compensation according to the procedure described in Section 6. If this does not cure the trouble, then check the tubes of the Vertical Amplifier by substitution.

Troubleshooting the Horizontal Amplifier

No Trace. If a no-trace condition has been isolated to the Horizontal Amplifier, set the SWEEP TIME/CM control in the HORIZ. AMPLIFIER position and short the grids of the two Horizontal Amplifier tubes together. If the spot now appears, the trouble lies in the grid circuit of one of the tubes. If the spot does not appear, check the tubes by substitution. If the spot still does not appear, the trouble is in the plate, screen, or cathode circuit of one of the tubes.

Short Trace. If a short trace is caused by a trouble in the Horizontal Amplifier, the sweep timing will also be affected, and you should proceed as directed in the following paragraph.

Improper Sweep Timing. If improper sweep timing has been isolated to the Horizontal Amplifier, check the tubes by substitution. If this does not cure the trouble, check the other components in the circuit by voltage and resistance measurements.

Troubleshooting the Sweep Trigger

If the Sweep Trigger is found to be at fault, first check the triggering in all positions of the SOURCE, COUPLING, and SLOPE switches to determine if the trouble is in the

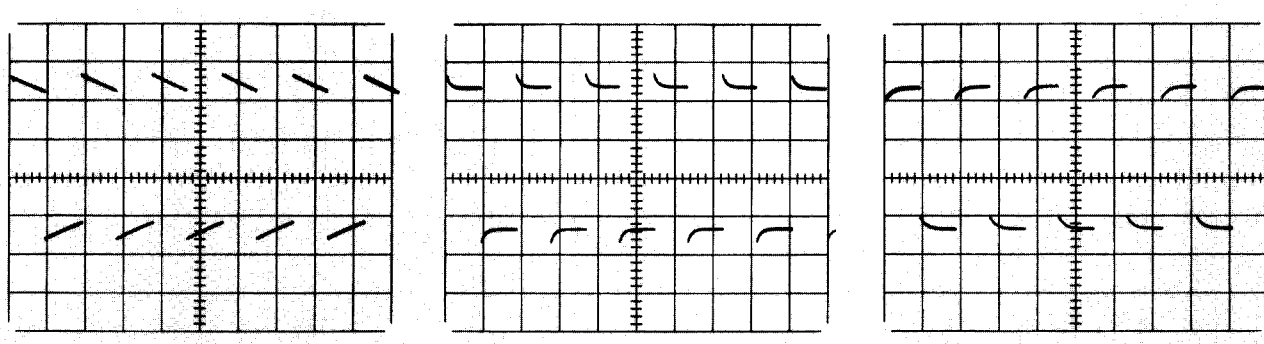

Fig. 5-5. Frequency distortion. (a) Low-frequency distortion of an ac-coupled 100-cps square wave due to attenuation of the low-frequency components of the waveform. (b) High-frequency distortion of a 1000-cps square wave due to excessive boost of the high-frequency components of the waveform. (c) High-frequency distortion of a 1000-cps square wave due to attenuation of the high-frequency components of the waveform.

http://manoman.sqhill.com

switching. The 500-millivolt output of the Calibrator can be used for both the internal and external triggering signal. (When checking the internal triggering, set the SENSITIVITY control to .5 VOLTS/CM.) Do not use the AUTO. or FREE RUN positions of the LEVEL control during this step.

If triggering is absent in all positions of the SOURCE, COUPLING, and SLOPE switches, set the LEVEL control to AUTO. If a sweep now appears, the trouble is in the Trigger Input Amplifier. If a sweep does not appear, try to adjust the sweep stability according to the procedure described in Section 6. If it is not possible to adjust the sweep stability as described in the procedure, then the Trigger Multivibrator is at fault.

Troubleshooting the Sweep Generator Circuit

No Horizontal Sweep. If the Sweep Generator is not producing a sawtooth waveform when the TRIGGER LEVEL control is in the FREE RUN position, some defect in the circuit is causing the output to remain at some fixed voltage. A clue to the cause of this trouble can be obtained by measuring the plate voltage of the Miller tube, V160A, pin 6.

NOTE

All voltages in this section should be measured with a 20,000 ohms-per-volt voltmeter or a vacuum-tube voltmeter.

The voltage reading obtained at the plate of V160A will probably be approximately +200 volts, or approximately +30 volts. A reading of +200 volts indicates that the Miller Runup Circuit has run up and has not been reset, while a reading of +30 volts indicates that the Miller Runup Circuit is not being allowed to run up. The condition that exists will depend on the type of trouble occurring in the circuit. The two conditions of plate voltage will be handled separately in the following paragraphs.

High Voltage at the plate of the Miller tube, V160A, indicates that the tube is cut off. This can result from any one of the following conditions: (1) the Disconnect Diodes do not conduct, (2) the Sweep-Gating Multivibrator does not reset, (3) the Hold-Off Circuit does not reset the Sweep-Gating Multivibrator, or (4) the Runup C.F. does not drive the Hold-Off Circuit. The defective stage can be detected by a series of systematic voltage measurements. When an improper voltage reading is obtained, this will indicate the defective stage.

Check the voltage at the grid (pin 2) of the Miller tube, V160A. The static voltage at the Miller grid is determined by conduction through the Timing Resistor, R160, (from —100-volt bus), the lower diode, V152B, and resistor R147. If the voltage reading is less than —4 volts, V152B is probably conducting normally and can be eliminated as a possible cause of the trouble. If the voltage is more negative than approximately —20 volts, the diode is probably not conducting in the proper manner. In this case, check V152 and resistor R147.

Measure the voltage at the output of the Sweep Generator circuit (pin 8 of V160B). If this voltage is approximately +150 volts, the Runup Cathode Follower stage may be assumed to be operating correctly. If this voltage is low, however, the stage is defective and its grid and cathode circuits should be checked.

Next, measure the voltage at the cathode of V145B, pin 3. If this voltage is more positive than —55 volts, the trouble is in the Sweep-Gating Multivibrator. Check the tubes and resistors in this circuit. The voltage divider network in the cathode of V135B is particularly critical.

If the voltage at the cathode of V145B, pin 3, is more negative than —55 volts, check the tubes in the Hold-Off Circuit, the Hold-Off Capacitor, and resistors in the cathode circuit of the two tubes.

Low Voltage at the plate of the Miller tube indicates that the tube is conducting quite heavily and is not being allowed to perform its normal runup operation. If this trouble exists on only a few ranges of the SWEEP TIME/CM control, the trouble is probably an open timing resistor. If the trouble exists on all ranges of the SWEEP TIME/CM control, monitor the voltage at pin 3 of V145B and adjust the SWEEP STABILITY ADJUST control for the most negative voltage (approximately —65 volts or lower). With this voltage, the sweep should free run, producing a trace on the screen. If the sweep does not free run, the trouble is in the Sweep Gating Multivibrator.

If the voltage at pin 3 of V145B remains relatively constant as the SWEEP STABILITY ADJUST control is rotated, a defect in the Hold-Off Circuit is indicated.

Short Trace. If the short trace on the screen has been attributed to trouble in the Sweep Generator, check the values of R174, R176, and R178.

Unstable Triggering. If a free-running trace, with no triggering signal applied, cannot be turned off by moving the LEVEL control out of the FREE RUN position, the trouble is in the Sweep-Gating Multivibrator of the Sweep Generator. Check V135 and V145 by substitution. If this does not cure the trouble, check the resistances in the grid and cathode circuits of V135A and V145A.

Improper Sweep Timing. Improper sweep timing can be caused by the sawtooth waveform in the Sweep Generator building up too slowly or building up nonlinearly. If this improper sweep timing occurs at only a few settings of the SWEEP TIME/CM control, the trouble is in one of the components of the Timing Switch. If it occurs at all settings of the SWEEP TIME/CM control, the trouble is in the Miller Runup Circuit or the Runup Cathode Follower.

Troubleshooting the CRT Circuit

Troubles in the Crt Circuit are usually caused by defects in the voltage dividers, in the heater circuit, or in the crt itself. The voltage dividers and heater circuit can be checked by voltage and resistance measurements. If all the circuits appear to be satisfactory, replace the crt according to the procedure described in the first part of this section.

http://manoman.sqhill.com

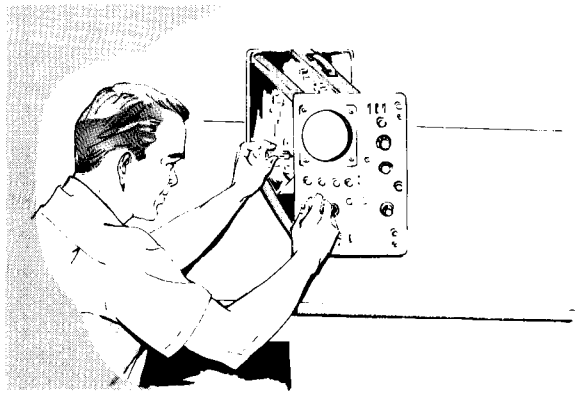

SECTION 6

CALIBRATION

INTRODUCTION

We recommend that the Type 504 Oscilloscope be calibrated after each 500 hours of operation or every 6 months, whichever comes first. It should not require more frequent calibration. However, it may be necessary to check the calibration of certain parts of the instrument whenever tubes or other circuit components are replaced (see Section 5, Maintenance).

Apparent trouble in the instrument may be due to improper calibration of one or more circuits. Consequently, this section of the manual should be used in conjunction with the Maintenance section during troubleshooting work. If trouble occurs, you must be sure that it is not due to improper calibration before proceeding with more detailed troubleshooting.

In the instructions that follow, the steps are arranged in the proper sequence for a complete calibration of the instrument. However, the steps may be performed out of order or individually, without regard to the other steps, as long as each step is performed completely, including references to the performance or verification of other adjustments.

Fig. 6-1 and Fig. 6-2 show the location of the internal adjustments referred to in this procedure.

EQUIPMENT REQUIRED

The following equipment is necessary for complete calibration of the Type 504 Oscilloscope:

1. DC voltmeter (sensitivity of at least 5000 Ω/v), calibrated for an accuracy of 1% or better at 12.6, 85, 100, and 250 volts, and for an accuracy of 3% or better at 3000 volts.

2. Accurate rms-reading ac voltmeter, having a range of at least 0-125 volts. (0-250 volts for 234-volt operation).

3. Variable autotransformer having a rating of at least 150 watts.

4. Time-Mark Generator, Tektronix Type 180 or Type 180A or equivalent. Time-Mark Generator used must have markers at 1 μsec, 10 μsec, 100 μsec, 1 msec, 5 msec, 10 msec and 100 msec with an accuracy of at least 1%.

5. Square-Wave Generator, Tektronix Type 105 or equivalent. Required specifications are: (1) output frequency of approximately 1 kilocycle, (2) risetime of 0.02 μsec or less, and (3) output amplitude variable from about 40 millivolts to 100 volts.

6. Test Oscilloscope with calibrated vertical deflection factors from .01 to 10 volts per division.

7. Low-capacitance calibration tool: Tektronix part number 003-000 (see page 11, Accessories Section) or equivalent.

8. Coaxial cable suitable for applying the outputs of the square-wave generator and the time-mark generator to the input of the Type 504.

9. 47-μμf Input Capacitance Standardizer, Tektronix Type CS47 or equivalent.

CALIBRATION PROCEDURE

Initial Setup

Remove the side covers from the Type 504 Oscilloscope. Set the front-panel controls as follows (controls not listed may be left in any position):

SLOPE	+
COUPLING	AC
SOURCE	INT.
LEVEL	Ccw but not AUTO.
SWEEP TIME/CM	1mSEC.
SWEEP TIME/CM VARIABLE	CALIBRATED
INTENSITY	Fully ccw
SENSITIVITY	.1 VOLTS/CM
SENSITIVITY VARIABLE	CALIBRATED
POSITION controls	Midrange
AC-DC-GND	DC

NOTE

The controls should be placed in these positions during each of the following steps except when otherwise specified.

Connect the autotransformer to a suitable power source and the Type 504 Oscilloscope to the autotransformer. Set the output of the autotransformer to the nominal voltage for which your instrument is wired (see Section 2). Allow the equipment to warm up for at least 5 minutes before proceeding with the following adjustments.

http://manoman.sqhill.com

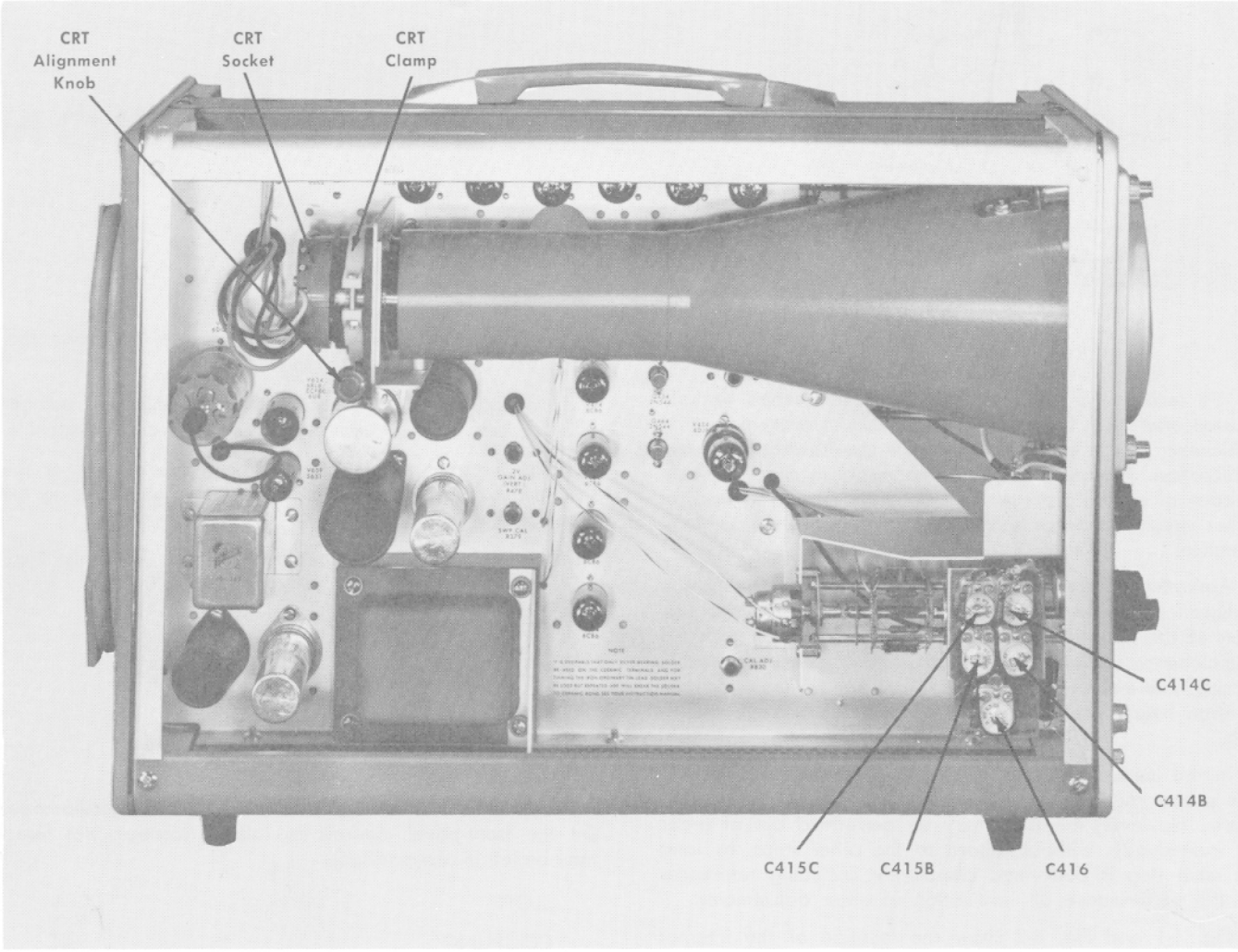

Fig. 6-1. Location of Type 504 Oscilloscope internal adjustments, left side.

Power Supply Output Voltage Regulation

With the dc voltmeter, measure the output voltage of the —100-, +85-, +100-, +250-, and —3000-volt supplies at the points indicated in Fig. 6-3. Set the —100 ADJ. adjustment so that the —100-volt supply is within ±2% and the other supplies are within ±5% of their rated values.

NOTE

Do not adjust the —100 ADJ. adjustment unless one or more of the supplies is actually out of tolerance. If the setting of this adjustment is changed, the entire instrument should be recalibrated.

Vary the autotransformer output voltage between the line voltage limits specified in Section 2. All of the regulated voltages should remain within the tolerances stated above over this range.

Power Supply Output Voltage Ripple

Using the test oscilloscope, check the amplitude of the 120-cycle ripple voltage at the output of each supply except the —3000-volt supply, with the autotransformer output set at the nominal voltage for the instrument. Ripple at each output should be 25 millivolts or less. Do not attempt to measure the ripple on the —3000-volt supply. Disregard the 30-kc ripple on the +85-volt supply.

Calibrator Output

Connect the input probe of the test oscilloscope to the CAL. OUT 500 mV terminal on the front panel. Adjust the CAL. ADJ. adjustment (R880) for an output of 500 millivolts of amplitude. Disconnect the test oscilloscope.

Crt Alignment

Check to see that the face of the crt rests snugly against the graticule. If it does not, loosen the crt clamp, and move the crt forward by pushing on the tube socket. Then tighten the crt clamp.

Set the LEVEL control to the FREE-RUN position, and turn up the INTENSITY control until a trace is visible (it may be

http://manoman.sqhill.com

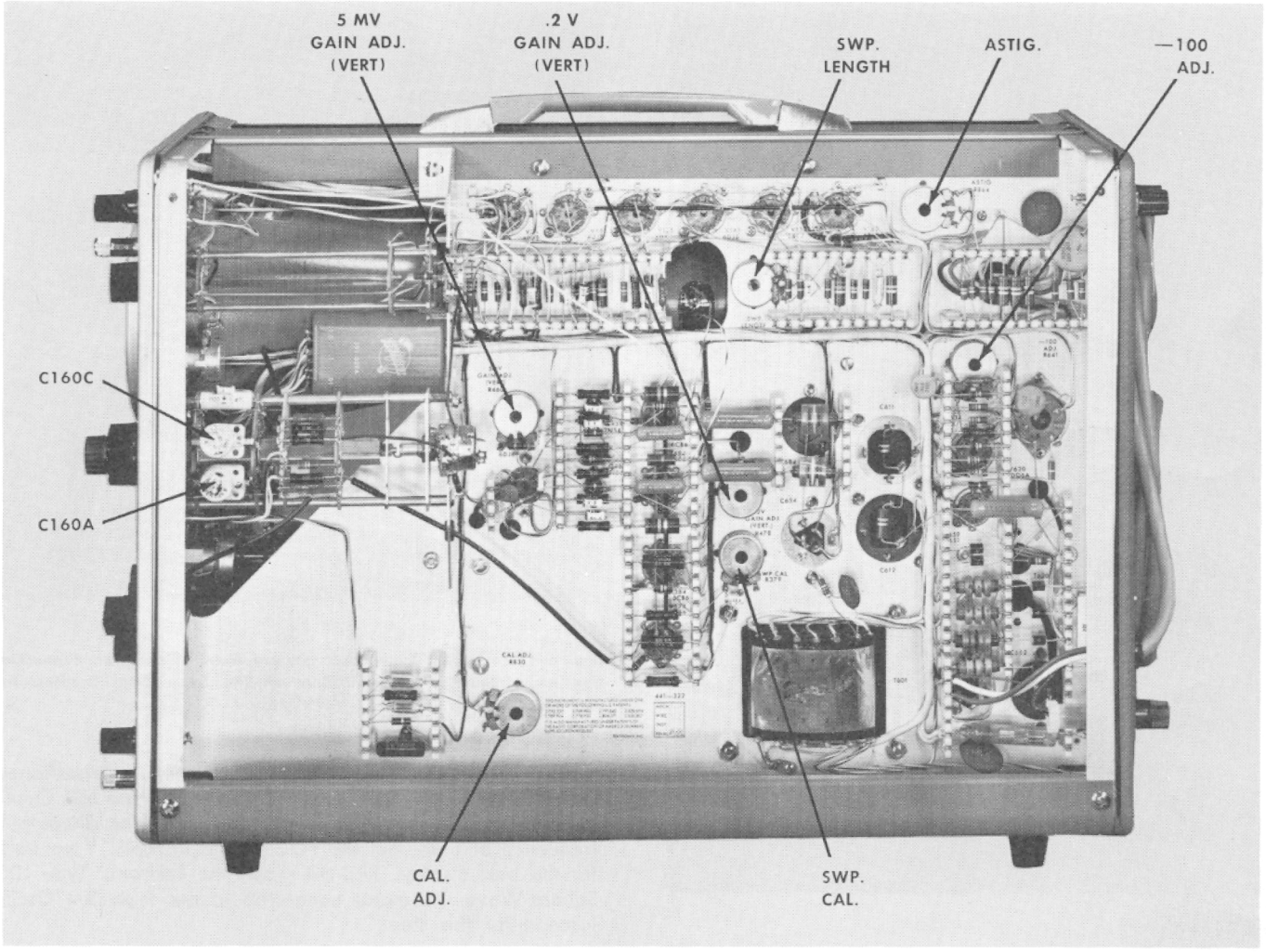

Fig. 6-2. Location of Type 504 Oscilloscope internal adjustments, right side

necessary to adjust the VERTICAL POSITION control). Adjust the FOCUS control for the narrowest trace. With the VERTICAL POSITION control, position the trace directly behind the center horizontal graticule line. If the trace is tipped relative to the line, rotate the crt alignment knob until the trace and the graticule line are parallel.

Crt Astigmatism

Set the FOCUS control fully clockwise and the SWEEP TIME/CM control to the HORIZ. AMPLIFIER position. Position the spot onto the screen, and adjust the ASTIG. ADJ. (R864) so that the defocused spot is as nearly circular as possible. The INTENSITY control may have to be adjusted to produce the defocused circle, but should be turned down when a sharply focused spot is produced so as not to burn the crt face. Adjust the FOCUS control so that the spot is in sharp focus.

Sweep Stability

Set the LEVEL control to the FREE RUN position and center the trace vertically on the screen. Adjust the INTENSITY and FOCUS controls to obtain a bright, well-defined trace. Set the LEVEL control to AUTO. and the SWEEP STABILITY ADJUST adjustment (R111, front panel screwdriver adjustment) fully counterclockwise. Next, turn the SWEEP STABILITY ADJUST adjustment clockwise until a trace appears on the crt. Note the position of the screwdriver adjustment. Advance the adjustment farther clockwise until the trace brightens. Finally, set the adjustment approximately midway between the position where the trace first appears and the position where it brightens.

Vertical Amplifier DC Balance

Set the LEVEL control to the FREE RUN position. Set the SENSITIVITY control to .2 VOLTS/CM and the SENSITIVITY VARIABLE control to the CALIBRATED position. Turn the INTENSITY control up to display a trace, and center the trace vertically on the screen with the VERTICAL POSITION control. Set the AC-DC-GND switch to GND. Adjust the DC BAL. adjustment (front panel screwdriver adjustment) so that the trace does not shift vertically as the SENSITIVITY control is rotated back and forth between the .2 VOLTS/CM position and the 5 mV/CM position.

http://manoman.sqhill.com

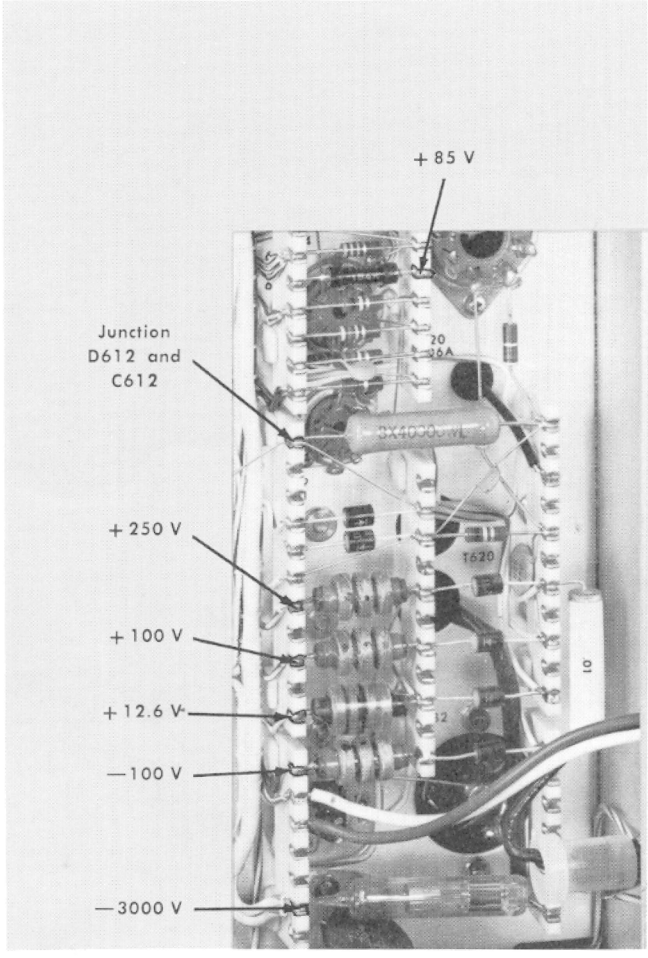

Fig. 6-3. Location of Power Supply test points.

Vertical Amplifier Sensitivity

Set the LEVEL control to the AUTO. position and the SENSITIVITY control to .1 VOLTS/CM. Connect a jumper wire from the CAL. OUT 500 mV connector to the INPUT connector. Adjust the FOCUS, INTENSITY, and POSITION controls for a suitable display. Adjust the .2 V GAIN ADJ. adjustment (R478) for a vertical deflection of five centimeters on the crt screen.

Remove the jumper wire from the CAL. OUT 500 mV connector and connect it from the CAL. OUT 25 mV connector to the INPUT connector. Set the SENSITIVITY control to 5 mV/CM. Adjust the 5 mV GAIN ADJ. adjustment (R460) for five centimeters of vertical deflection on the crt screen.

Repeat this entire step until both adjustments are correct without further adjustment. Disconnect the jumper wire.

Vertical Amplifier High Frequency Compensation

Set the SWEEP TIME/CM control to .5 mSEC, the SENSITIVITY control to .2 VOLTS/CM, the AC-DC-GND switch to AC, and the LEVEL control to AUTO. Connect the output of

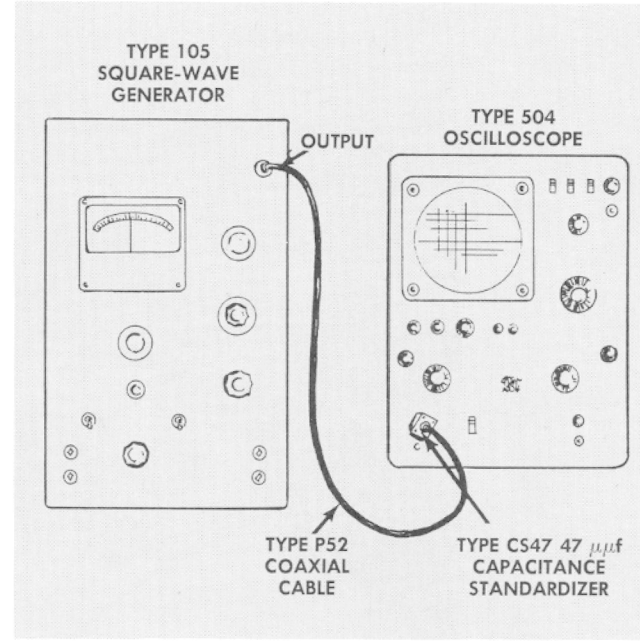

Fig. 6-4. Tektronix Type 105 Square-Wave Generator connected for high-frequency compensation of the Type 504 Oscilloscope Vertical Amplifier.

the square-wave generator through the 47-μμf capacitance standardizer to the INPUT connector of the Type 504 Oscilloscope. Adjust the square-wave generator for an output frequency of 1 kc. Set the FOCUS and INTENSITY controls for the best display. Fig. 6-4 shows the Tektronix Type 105 Square-Wave Generator connected to the Type 504 Oscilloscope for this step.

Set the SENSITIVITY control to the positions indicated in Table 6-1 and adjust the corresponding capacitors for the best square-wave response. C416, C415B, and C414B affect the overall level of the square wave; C415C and C414C have the most effect on a small portion of the leading edge and corner.

Maintain about four centimeters of vertical deflection by adjusting the output amplitude of the square-wave generator as you switch the SENSITIVITY control from one setting to the next.

TABLE 6-1

SENSITIVITY setting	Adjust
.2 VOLTS/CM	C416
.5 VOLTS/CM	C415B, C15C
5 VOLTS/CM	C414B, C414C

Disconnect the square-wave generator from the Type 504 Oscilloscope when you have completed this step.

Horizontal Amplifier Gain

Set the LEVEL control to AUTO. and the AC-DC-GND switch to AC. Apply 1-millisecond markers from the time-mark generator to the INPUT connector of the Type 504

http://manoman.sqhill.com

Oscilloscope. Set the FOCUS, INTENSITY, and POSITION controls for the best display. Adjust the SWP. CAL. adjustment (R379) for a display of one marker per centimeter on the crt screen. (Use the HORIZONTAL POSITION control to align the markers with the graticule lines).

Sweep Length

Set the LEVEL control to FREE RUN and adjust the INTENSITY control to display a trace. Adjust the SWP. LENGTH adjustment (R176) for a sweep length of approximately 10.5 centimeters.

Sweep Timing

Some unavoidable distortion or nonlinearity may exist within one centimeter of the right- and left-hand edges of the graticule. For this reason, all sweep-timing measurements should be made between the 1-centimeter and 9-centimeter points on the 10-centimeter-wide graticule (see Fig. 6-5).

Set the SWEEP TIME/CM control to the positions shown in the first column of Table 6-2, apply time markers as noted in the second column, and note that the time markers are observed on the crt screen as noted in the third column. When checking the .1 SEC sweep rate, it may be necessary to adjust the LEVEL control for a stable display.

Next, apply 1-microsecond markers from the time-mark generator to the INPUT connector. Set the SWEEP TIME/CM control to the 1 μSEC position. Adjust the LEVEL, SENSITIVITY, and POSITION controls to obtain a stable display. Adjust C160A for one marker per centimeter on the crt screen. This adjusts the sweep timing of the 1, 2, and 5 μSEC settings of the SWEEP TIME/CM control.

Disconnect the time-marker generator and replace the side covers of the oscilloscope.

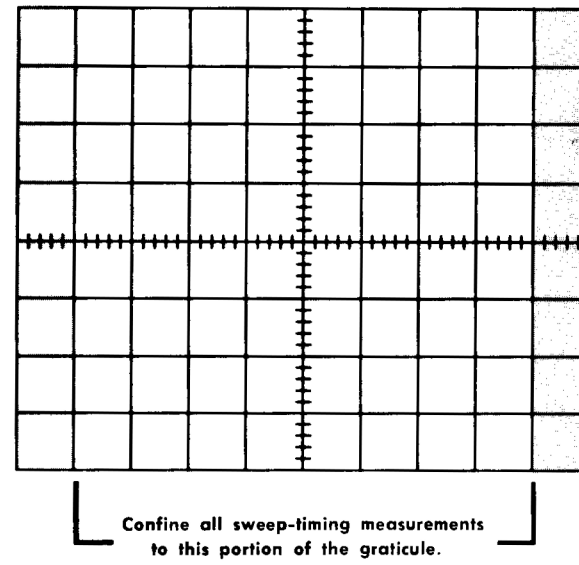

Fig. 6-5. Sweep-timing measurement limits.

TABLE 6-2

SWEEP TIME/CM Setting	Time Markers Applied	Observe
.1 mSEC	100-μsec	1 marker/cm
1 mSEC	1-msec	1 marker/cm
2 mSEC	1-msec	2 marker/cm
5 mSEC	5-msec	1 marker/cm
10 mSEC	10-msec	1 marker/cm
.1 SEC	.1-sec	1 marker/cm

http://manoman.sqhill.com

PARTS LIST *and* DIAGRAMS

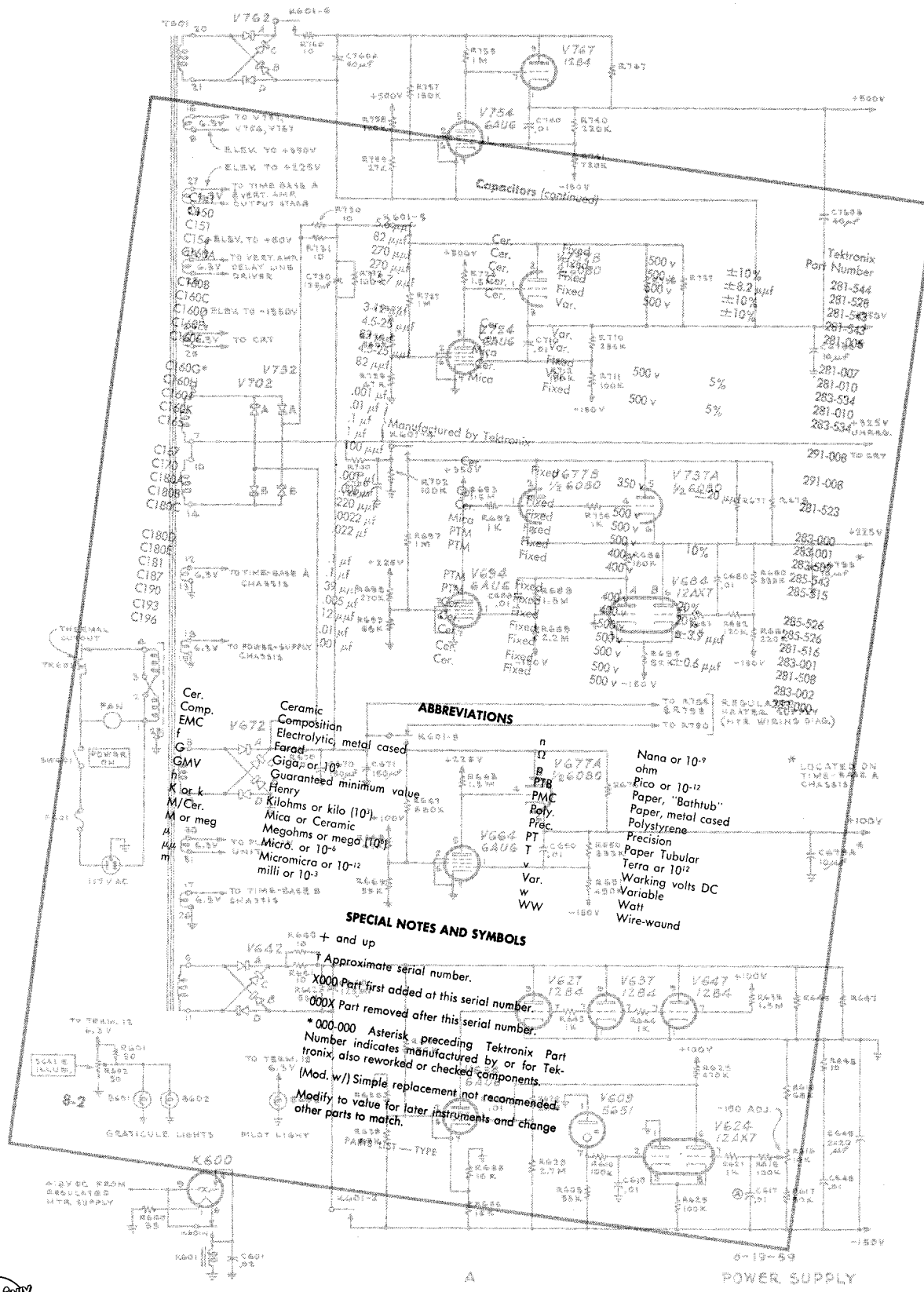

MANUFACTURERS OF CATHODE-RAY OSCILLOSCOPES

http://manoman.sqhill.com

HOW TO ORDER PARTS

Replacement parts are available through your local Tektronix Field Office.

Improvements in Tektronix instruments are incorporated as soon as available. Therefore, when ordering a replacement part it is important to supply the part number including any suffix, instrument type, serial number, plus a modification number where applicable.

If the part you have ordered has been improved or replaced, your local Field Office will contact you if there is a change in part number.

http://manoman.sqhill.com

PARTS LIST

Bulbs

			Tektronix Part Number
B167		Neon, Type NE-2	150-002
B601		Graticule Light	150-001
B602		Graticule Light	150-001
B883		Neon, Type NE-2	150-002
B886		Neon, Type NE-2	150-002

Capacitors

C10		.005 μf	Cer.	Fixed	500 v		283-001
C15		.001 μf	Cer.	Fixed	500 v		283-000
C20		.001 μf	Cer.	Fixed	500 v		283-000
C31		.01 μf	Cer.	Fixed	500 v		283-002
C37		22 μμf	Cer.	Fixed	500 v		281-510
C43		47 μμf	Cer.	Fixed	500 v		281-518
C131		22 μμf	Cer.	Fixed	500 v		281-511
C141		4.7 μμf	Cer.	Fixed	500 v		281-501
C160A		3-12 μμf	Cer.	Var.			281-007
C160B	101-479	82 μμf	Cer.	Fixed	500 v		Use 281-574
C160B	480-up	82 μμf	Cer.	Fixed	500 v		281-574
C160C		4.5-25 μμf	Cer.	Var.			281-010

Timing Series

Either of the following combinations may be used. The tolerance of C160D must match that of C160E, F, & G.

C160D		.001 μf	Mylar	Fixed		±½%	*291-008
C160E		.01 μf					
C160F		.1 μf		Mylar Timing Series		±½%	*291-029
C160G		1 μf					

OR

C167		.001 μf	Cer.	Fixed	500 v		283-000
C181		15 μμf	Cer.	Fixed	500 v		281-509
C361		.005 μμf	Cer.	Fixed	500 v		283-001
C379		470 μμf	Cer.	Fixed	500 v		281-525
C408A	X500-up	8 μμf	Cer.	Fixed	500 v		281-503
C408C	X500-up	18 μμf	Cer.	Fixed	500 v		281-542
C410		.022 μf	PTM	Fixed	600 v	5%	285-579
C414B		7-45 μμf	Cer.	Var.			281-012
C414C		1.5-7 μμf	Cer.	Var.			281-005
C414E		198 μμf	Cer.	Fixed	500 v	10%	281-560
C415B		7-45 μμf	Cer.	Var.			281-012
C415C		1.5-7 μμf	Cer.	Var.			281-005
C416		4.5-25 μμf	Cer.	Var.			281-010
C421		.01 μf	Cer.	Fixed	150 v		283-003
C440		.005 μf	Cer.	Fixed	500 v		283-001
C450		47 μμf	Cer.	Fixed	500 v		281-518
C453		0.1 μf	Cer.	Fixed	100 v		283-012

http://manoman.sqhill.com

Capacitors *(continued)*

							Tektronix Part Number
C456	101-489	2.2 μμf	Cer.	Fixed	500 v		281-500
C456	490-up	1 μμf	Cer.	Fixed	500 v		281-538
C457	101-489	18 μμf	Cer.	Fixed	500 v		281-542
C457	490-up	12 μμf	Cer.	Fixed	500 v		281-508
C460		47 μμf	Cer.	Fixed	500 v		281-518
C466	101-489	2.2 μμf	Cer.	Fixed	500 v		281-500
C466	490-up	1 μμf	Cer.	Fixed	500 v		281-538
C467	101-489	18 μμf	Cer.	Fixed	500 v		281-542
C467	490-up	12 μμf	Cer.	Fixed	500 v		281-508
C611		125 μf	EMC	Fixed	350 v		*290-052
C612		125 μf	EMC	Fixed	350 v		*290-044
C614	X480-up	.02 μf	Cer.	Fixed	900 v	RMS.	283-022
C620		.01 μf	Mica	Fixed	600 v	5%	Use 283-575
C621		.005 μf	Cer.	Fixed	500 v		283-001
C624	X480-up	10 μf	EMC		15 v		290-106
C628		.001 μf	Cer.	Fixed	500 v		283-000
C630		.001 μf	Cer.	Fixed	500 v		283-000
C642		.005 μf	Cer.	Fixed	500 v		283-001
C646		.01 μf	Cer.	Fixed	500 v		283-002
C652A		10 μf	EMC	Fixed	350 v		
C652B		50 μf	EMC	Fixed	150 v		*290-127
C652C		100 μf	EMC	Fixed	50 v		
C654A		10 μf	EMC	Fixed	350 v		
C654B		50 μf	EMC	Fixed	150 v		*290-127
C654C		100 μf	EMC	Fixed	50 v		
C682		2 x 10 μf	EMC	Fixed	250 v		*290-128
C684		2 x 40 μf	EMC	Fixed	150 v		*290-039
C692A,B		.005 μf	Cer.	Fixed	4000 v		(2) 283-034
C851A,B		.005 μf	Cer.	Fixed	4000 v		(2) 283-034
C854		.001 μf	Cer.	Fixed	6000 v		283-033
C858		.005 μf	Cer.	Fixed	500 v		283-001
C883		.0022 μf	PTM	Fixed	400 v		285-543
C886	X490-up	.0022 μf	Cer.	Fixed	50 v		283-028

Fuses

F601	1.25 Amp 3 AG Slo Blo	117 V operation	159-041
	0.7 Amp 3 AG Slo Blo	234 V operation	159-040

Inductors

L419	3.9 mh	Fixed		108-204
L473	3.9 mh	Fixed		Use 108-224
L483	3.9 mh	Fixed		Use 108-224
L654	1 mh	Fixed		108-207
L664	1 mh	Fixed		108-207
L672	1 mh	Fixed		108-205
L684	1 mh	Fixed		108-207

Resistors

R14	1 meg	½ w	Fixed	Comp.	10%	302-105
R15	470 k	½ w	Fixed	Comp.	10%	302-474
R17	1 meg		Var.	Trig. Level		311-184
R19	2.2 meg	½ w	Fixed	Comp.	10%	302-225
R20	270 k	½ w	Fixed	Comp.	10%	302-274

http://manoman.sqhill.com

							Tektronix Part Number
R22		470 Ω	½ w	Fixed	Comp.	10%	302-471
R23		470 Ω	½ w	Fixed	Comp.	10%	302-471
R25		27 k	½ w	Fixed	Comp.	10%	302-273
R26	101-529	100 k	½ w	Fixed	Comp.	10%	302-104
R26	530-up	120 k	½ w	Prec.	Comp.	1%	309-091
R28	101-529	33 k	1 w	Fixed	Comp.	10%	304-333
R28	530-up	33 k	1 w	Prec.	Comp.	1%	310-070
R34		680 Ω	½ w	Fixed	Comp.	10%	302-681
R35		2.7 k	½ w	Fixed	Comp.	10%	302-272
R36	X480-up	470 Ω	½ w	Fixed	Comp.	10%	302-471
R37		370 k	½ w	Fixed	Prec.	1%	309-055
R38		500 k	½ w	Fixed	Prec.	1%	309-003
R40		2.7 meg	½ w	Fixed	Comp.	10%	302-275
R43		4.7 k	½ w	Fixed	Comp.	10%	302-472
R44		10 k	½ w	Fixed	Comp.	10%	302-103
R46		22 k	1 w	Fixed	Comp.	10%	304-223
R111		15 k		Var.	Sw/Stability Adj.		311-112
R112	101-189	27 k	½ w	Fixed	Comp.	10%	302-273
R112	190-up	27 k	½ w	Fixed	Comp.	5%	301-273
R113	101-189	56 k	½ w	Fixed	Comp.	10%	302-563
R113	190-up	51 k	½ w	Fixed	Comp.	5%	301-513
R134		82 k	½ w	Fixed	Prec.	1%	309-043
R135		180 k	½ w	Fixed	Comp.	5%	301-184
R137		100 Ω	½ w	Fixed	Comp.	10%	302-101
R141		100 k	½ w	Fixed	Prec.	1%	309-045
R143		25.6 k	½ w	Fixed	Prec.	1%	309-136
R144		20 k	½ w	Fixed	Prec.	1%	309-153
R146		100 Ω	½ w	Fixed	Comp.	10%	302-101
R147		1.5 k	½ w	Fixed	Comp.	10%	302-152
R160A		1 meg	½ w	Fixed	Prec.	1%	309-014
R160B		2 meg	½ w	Fixed	Prec.	1%	309-023
R160C		5 meg	½ w	Fixed	Prec.	1%	309-087
R160X		82 k	½ w	Fixed	Comp.	10%	302-823
R160Y		200 k		Var.	Sweep Time/CM		311-182
R164		150 k	1 w	Fixed	Comp.	10%	304-154
R167		1 meg	½ w	Fixed	Comp.	10%	302-105
R168		100 k	½ w	Fixed	Comp.	10%	302-104
R171		100 Ω	½ w	Fixed	Comp.	10%	302-101
R174		27 k	1 w	Fixed	Comp.	10%	304-273
R176		5 k		Var.	Sw. Length		311-195
R178		8.2 k	½ w	Fixed	Comp.	10%	302-822
R181		4.7 meg	½ w	Fixed	Comp.	10%	302-475
R191		90 k	½ w	Fixed	Prec.	1%	309-195
R192		5 k	½ w	Fixed	Prec.	1%	309-159
R193		180 k	½ w	Fixed	Comp.	10%	302-184
R310		100 k		Var.	Horiz. Atten.		311-026
R361		250 k		Var.	Comp.		311-032
R361		250 k		Var.	Position		311-206
R364		220 k	½ w	Fixed	Comp.	10%	302-224
R365		8.2 k	½ w	Fixed	Comp.	10%	302-822
R371		470 Ω	½ w	Fixed	Comp.	10%	302-471
R373		56.5 k	1 w	Fixed	Prec.	1%	310-065
R376		43.4 k	½ w	Fixed	Prec.	1%	309-176
R378	X136-479	1.2 k	½ w	Fixed	Comp.	10%	302-122
R378	480-up	1.11 k	½ w	Fixed	Prec.	1%	309-284
R379	101-479	5 k		Var.	Swp. Cal.		311-195
R379	480-up	2 k		Var.	Swp. Cal.		Use 311-186

http://manoman.sqhill.com

Resistors *(continued)*

							Tektronix Part Number
R383		56.5 k	1 w	Fixed	Prec.	1%	310-065
R386		43.4 k	½ w	Fixed	Prec.	1%	309-176
R408A		10 k	½ w	Fixed	Prec.	1%	309-100
R408C		3.33 k	½ w	Fixed	Prec.	1%	309-283
R408E		1.11 k	½ w	Fixed	Prec.	1%	309-284
R408G		526 Ω	½ w	Fixed	Prec.	1%	309-285
R408J		256 Ω	½ w	Fixed	Prec.	1%	309-286
R414C		990 k	½ w	Fixed	Prec.	1%	309-145
R414E		10.1 k	⅛ w	Fixed	Prec.	1%	318-009
R415C		900 k	½ w	Fixed	Prec.	1%	309-142
R415E		111 k	⅛ w	Fixed	Prec.	1%	318-006
R416		1 meg	½ w	Fixed	Prec.	1%	309-014
R419		21.5 k	½ w	Fixed	Prec.	1%	309-290
R421		1 meg		Var.	DC Bal.		311-184
R425		1 meg	½ w	Fixed	Comp.	10%	302-105
R426		2.2 k	½ w	Fixed	Comp.	10%	302-222
R434		50 k	½ w	Fixed	Prec.	1%	309-090
R438		38.3 k	1 w	Fixed	Prec.	1%	310-074
R440		100 k	½ w	Fixed	Comp.	10%	302-104
R441		470 Ω	½ w	Fixed	Comp.	10%	302-471
R444		50 k	½ w	Fixed	Prec.	1%	309-090
R448		38.3 k	1 w	Fixed	Prec.	1%	310-074
R450		1 k	½ w	Fixed	Comp.	10%	302-102
R451	X490-up	33 k	1 w	Fixed	Comp.	5%	303-333
R452		8.2 k	1 w	Fixed	Comp.	5%	303-822
R453	101-479	10 k	½ w	Fixed	Comp.	5%	301-103
R453	480-489	6.8 k	½ w	Fixed	Comp.	5%	301-682
R453	490-up	10 k	½ w	Fixed	Comp.	5%	301-103
R456		390 k	¼ w	Fixed	Comp.	10%	316-394
R457		12.5 k	½ w	Fixed	Prec.	1%	309-228
R458		1 meg	½ w	Fixed	Comp.	10%	302-105
R460		20 k		Var.	5 MV Gain Adj.		311-187
R461	X490-up	910 Ω	½ w	Fixed	Comp.	5%	301-911
R466		390 k	¼ w	Fixed	Comp.	10%	316-394
R467		12.5 k	½ w	Fixed	Prec.	1%	309-228
R468		1 meg	½ w	Fixed	Comp.	10%	302-105
R470		2 x 20 k		Var.	Position		311-190
R471		100 Ω	½ w	Fixed	Comp.	10%	302-101
R473		30 k	8 w	Fixed	WW	5%	308-105
R476		15 k	5 w	Fixed	WW	5%	308-108
R477		12 k	2 w	Fixed	Comp.	10%	306-123
R478	101-479	2 k		Var.	.2V Gain Adj.		311-186
R478	480-up	750 Ω		Var.	.2V Gain Adj.		311-232
R479	X480-up	402 Ω	½ w	Fixed	Prec.	10%	309-102
R481		100 Ω	½ w	Fixed	Comp.	10%	302-101
R483		30 k	8 w	Fixed	WW	5%	308-105
R486		15 k	5 w	Fixed	WW	5%	308-108
R487		12 k	2 w	Fixed	Comp.	10%	306-123
R488		2 k		Var.	Variable, Volts/CM		311-189
R490		470 k	½ w	Fixed	Comp.	10%	302-474
R491		47 k	½ w	Fixed	Comp.	10%	302-473
R492		330 k	½ w	Fixed	Comp.	10%	302-334
R601 †		50 Ω		Var.	Scale Illum.		311-057
R603	X480-up	100 Ω	½ w	Fixed	Comp.	10%	302-101

† Ganged with SW601. Furnished as a unit.

http://manoman.sqhill.com

Resistors *(continued)*

							Tektronix Part Number
R604	X480-up	100 Ω	½ w	Fixed	Comp.	10%	302-101
R611		150 k	1 w	Fixed	Comp.	10%	304-154
R612		150 k	1 w	Fixed	Comp.	10%	304-154
R621		100 k	½ w	Fixed	Comp.	10%	302-104
R623		4.7 k	½ w	Fixed	Comp.	10%	302-472
R624	X480-up	22 Ω	½ w	Fixed	Comp.	10%	302-220
R626		40 k	8 w	Fixed	WW	5%	308-168
R628		470 Ω	½ w	Fixed	Comp.	10%	302-471
R630		680 k	½ w	Fixed	Comp.	10%	302-684
R631		2.2 meg	½ w	Fixed	Comp.	10%	302-225
R632		100 Ω	½ w	Fixed	Comp.	10%	302-101
R634		33 k	½ w	Fixed	Comp.	10%	302-333
R635		56 k	½ w	Fixed	Comp.	10%	302-563
R637		470 k	½ w	Fixed	Comp.	10%	302-474
R640		154 k	½ w	Fixed	Prec.	1%	309-234
R641		20 k		Var.	—100 Adj.		311-187
R642		174 k	½ w	Fixed	Prec.	1%	309-151
R644		470 k	½ w	Fixed	Comp.	10%	302-474
R646		15 k	½ w	Fixed	Comp.	10%	302-153
R659		100 k	½ w	Fixed	Comp.	10%	302-104
R692		4.3 Ω	½ w	Fixed	Comp.	5%	307-056
R840		820 k	1 w	Fixed	Comp.	10%	304-824
R841		820 k	1 w	Fixed	Comp.	10%	304-824
R842		820 k	1 w	Fixed	Comp.	10%	304-824
R844		1 meg		Var.	Focus		311-041
R845		470 k	½ w	Fixed	Comp.	10%	302-474
R847	101-479	500 k		Var.	Intensity		311-188
R847	480-up	200 k	½ w	Var.	Intensity		311-242
R849		47 k	½ w	Fixed	Comp.	10%	302-473
R851		1.5 meg	½ w	Fixed	Comp.	10%	302-155
R852	101-479	2.2 meg	½ w	Fixed	Comp.	10%	302-225
R852	480-up	1.5 meg	½ w	Fixed	Comp.	10%	302-155
R854		100 k	½ w	Fixed	Comp.	10%	302-104
R857	101-479	39 k	½ w	Fixed	Comp.	10%	Use 302-393
R857	480-up	22 k	½ w	Fixed	Comp.	10%	302-223
R858		100 k	½ w	Fixed	Comp.	10%	302-104
R860		220 k	½ w	Fixed	Comp.	10%	302-224
R862		100 k	½ w	Fixed	Comp.	10%	302-104
R864		500 k		Var.	Astigmatism		311-193
R880		500 k		Var.	Cal Adj.		311-193
R881		1.75 meg	½ w	Fixed	Prec.	1%	309-019
R883		2.2 meg	½ w	Fixed	Comp.	10%	302-225
R886		4.75 k	½ w	Fixed	Prec.	1%	309-316
R887		250 Ω	½ w	Fixed	Prec.	1%	309-178

Diodes

Even though the diodes may be different in physical size, they are direct electrical replacements for the diodes in your instrument.

D44		Germanium	T12G	152-008
D452	X480-up	Germanium	T12G	152-008
D462	X480-up	Germanium	T12G	152-008
D611	X480-up	Silicon Diode	IN2864 or equal	Use 152-048
D612	X480-up	Silicon Diode	IN2864 or equal	Use 152-048

http://manoman.sqhill.com

Diodes *(continued)*

				Tektronix Part Number
D652	480-up	Silicon Diode	Selected 600 Div 500 MA	Use *153-008
D662	480-up	Silicon Diode	Selected 400 Div 400 MA	Use *153-007
D672	480-up	Silicon Diode	Selected 400 Div 400 MA	Use *153-007
D682	480-up	Silicon Diode	Selected 400 Div 400 MA	Use *153-007

Transistors*

Q454		3687/2N1637/2N1631	Use 151-045
Q464		3687/2N1637/2N1631	Use 151-045

Transformers

T601	101-479	Power	*050-039
T601	480-up	Power	*120-203
T620		CRT Supply	Use *120-199

Switches

			Wired	Unwired
SW5		Source		260-251
SW10		Coupling		260-145
SW17		Trig. Level	*262-325	*260-322
SW20		Slope		260-212
SW160		Time/CM	*262-335	*260-327
SW410		AC-DC-GND		*260-316
SW414	101-499	Sensitivity	*262-504	*260-328
SW414	500-up	Sensitivity	*262-503	*260-328
SW601 †		Power-Off With R601		311-057

Electron Tubes

V24	6DJ8	154-187
V45	6DJ8	154-187
V135	6DJ8	154-187
V145	6DJ8	154-187
V152	6BC7	154-232
V160	6BL8/ECF80	154-278
V374	6CB6	154-030
V384	6CB6	154-030
V434	6DJ8	154-187
V474	6CB6	154-030
V484	6CB6	154-030
V620	6DQ6A	154-277
V634	6BL8/ECF80	154-278
V659	5651	154-052
V692	5642	154-051
V859	T503 CRT P2 Std Phosphor	*154-265

† Ganged with R601. Furnished as a unit.

*Checked part selected for low noise. 2N544 transistors may have the manufacurer's part no., 3687, on the case.

http://manoman.sqhill.com

Type 504
Mechanical Parts List

	Tektronix Part Number
ADAPTER BINDING POST	013-004
ADAPTER POWER CORD, 2 WIRE TO 3 WIRE	103-013
ANGLE, FRAME, TOP LEFT 18¾" (S/N 400-up)	122-060
BAR 3/16 x 1/2 x 1¾ W/2 8-32 TAPPED HOLES	381-073
BAR TOP SUPPORT W/HANDLE	381-172
BASE, CRT ROTATOR, BLACK LACQUER	432-022
BRACKET PHOSPHOR BRONZE, CRT SPRING	406-239
BRACKET CRT SUPPORT	406-569
BRACKET TRANSFORMER X480-up	406-583
BRACKET SWITCH	406-587
BRACKET ATTENUATOR SWITCH	406-588
BRACKET CAPACITOR MOUNTING	406-589
BUSHING 3/8-32 x 9/16	358-010
BUSHING NYLON STRAIN RELIEF	358-025
BUSHING NYLON, FOR 5-WAY BINDING POST	358-036
CABLE HARNESS 1100 V	179-412
CABLE HARNESS F & I	179-424
CABLE HARNESS MAIN CHASSIS	179-425
CABLE HARNESS TIME/CM SWITCH (S/N 259-up)	179-474
CAP FUSE	200-015
CAP INSULATION, FUSE HOLDER	200-237
CAP INSULATION, FOR CLAROSTAT POTS	200-238
CAP INSULATION, FOR CENTRALAB POTS	200-247
CHASSIS, MAIN	441-322
CLAMP, CABLE 5/16 PLASTIC (HALF)	343-042
CLAMP #20 WIRE FOR NEON BULBS	343-043
CONNECTOR CHASSIS MT., COAX, 1 CONTACT FEMALE W/1/2" D HOLE	131-081
CONNECTOR CABLE END	131-142
CORD, POWER, 3 CONDUCTOR	161-017
COUPLING, POT	376-014
COVER GRATICULE	200-025
COVER POT & SWITCH	200-152
FASTENER, SNAP, DELRIN, .122 x 9/16 W/2-.396 PRONGS	214-153
FILTER, LIGHT GREEN PLEXI	378-522
GRATICULE, 5", 8 CM VERT. X10 CM. HORIZ.	331-056
GRIP, HANDLE	367-019
GROMMET RUBBER 1/4"	348-002
GROMMET RUBBER 5/16"	348-003

http://manoman.sqhill.com

Mechanical Parts List *(continued)*

	Tektronix Part Number
GROMMET RUBBER 3/4"	348-006
GROMMET POLY. 1/4" SNAP-IN	348-031
HOLDER FUSE, 3 AG	352-010
HOLDER CORD	352-028
KNOB SMALL RED 1/8" INSERT HOLE	366-031
KNOB SMALL RED 3/16" INSERT HOLE	366-032
KNOB SMALL RED 1/8" HOLE PART WAY	366-038
KNOB LARGE BLACK 1/4" HOLE THRU	366-040
KNOB LARGE BLACK 1/4" HOLE PART WAY	366-042
KNOB SMALL BLACK 1/4" HOLE PART WAY	366-044
KNOB LARGE BLACK 1.625 O.D.	366-058
KNOB SMALL BLACK .600 O.D.	366-066
LOCKWASHER INT. #4	210-004
LOCKWASHER INT. #6	210-006
LOCKWASHER EXT. #8	210-007
LOCKWASHER INT. #10	210-010
LOCKWASHER INT. 1/4"	210-011
LOCKWASHER INT. POT, 3/8" x 1/2"	210-012
LOCKWASHER INT. 3/8 x 11/16	210-013
LUG SOLDER SE4	210-201
LUG SOLDER SE6 W/2 WIRE HOLES	210-202
LUG SOLDER SE10, LONG	210-206
LUG SOLDER POT, PLAIN, 3/8	210-207
LUG SOLDER 1/4" LOCK	210-223
NUT HEX 4-40 x 3/16	210-406
NUT HEX 6-32 x 1/4	210-407
NUT HEX 3/8-32 x 1/2	210-413
NUT KNURLED GRATICULE 3/8-24 x 9/16 x 3/16	210-424
NUT HEX 10-32 x 3/8 x 1/8	210-445
NUT HEX 10-32 x 3/8 x 1/8 STAINLESS	210-564
NUT HEX 1/4-28 x 3/8 x 3/32	210-455
NUT KEPS 6-32 x 5/16	210-457
NUT KEPS 8-32 x 11/32	210-458
NUT HEX 1/4-32 x 3/8 x 3/32	210-465
NUT HEX 3/8-32 x 1/2 x1 11/16	210-494
NUT HEX ALUM. 21/32 x 2 1/2 TAP 6-32 BOTH ENDS (CRT ROTATOR BAR)	210-503

http://manoman.sqhill.com

	Tektronix Part Number
PANEL, FRONT	333-605
PLATE GROUND $^{9}/_{16} \times 1^{9}/_{32}$	386-427
PLATE REAR SUB PANEL	387-199
PLATE REAR OVERLAY	387-200
PLATE CABINET SIDE	387-201
PLATE CABINET BOTTOM	387-202
PLATE FRONT SUB-PANEL	387-218
POST BINDING, FLUTED CAP	129-036
POST BINDING, METAL, LONG	129-051
POST BINDING, METAL, SHORT	129-053
RING CRT ROTATOR	354-078
RING CLAMPING, CRT ROTATOR	354-103
ROD $^{1}/_{8} \times 5^{15}/_{16}$	384-209
ROD $^{1}/_{4} \times {}^{9}/_{32}$ TAP 6-32 THRU	385-127
SCREW 4-40 x $^{3}/_{16}$ BHS	211-007
SCREW 5-40 x $^{3}/_{16}$ PAN HS	211-029
SCREW 4-40 x $^{5}/_{16}$ PAN HS W/LOCKWASHER	211-033
SCREW 4-40 x $^{5}/_{16}$ FHS, PHILLIPS	211-038
SCREW 2-32 x $^{5}/_{16}$ RHS, PHILLIPS	213-090
SCREW 6-32 x $^{1}/_{4}$ BHS	211-504
SCREW 6-32 x $^{5}/_{16}$ BHS	211-507
SCREW 6-32 x $^{5}/_{8}$ BHS	211-513
SCREW 6-32 x $^{5}/_{16}$ PAN HS W/LOCKWASHER	211-534
SCREW 6-32 x $^{5}/_{16}$ FHS, 100°, CSK, PHILLIPS	211-538
SCREW 6-32 x $^{3}/_{8}$ FHS, 100°, CSK, PHILLIPS	211-559
SCREW 6-32 x 1 RHS	211-560
SCREW 6-32 x $^{3}/_{8}$ FH CAP HEX SOC.	211-561
SCREW 8-32 x $^{5}/_{16}$ BHS	212-004
SCREW 8-32 x $^{3}/_{8}$ BHS	212-023
SCREW 8-32 x $^{3}/_{8}$ TRUSS HS, PHILLIPS	212-039
SCREW 8-32 x $^{3}/_{8}$ FHS, 100°, PHILLIPS	212-040
SCREW 8-32 x $1^{1}/_{2}$ OHS, CSK, PHILLIPS	212-061
SCREW THREAD CUTTING, 4-40 x $^{1}/_{4}$ PHS	213-035
SCREW THREAD CUTTING, 4-40 x $^{5}/_{16}$ PHS	213-045
SCREW THREAD CUTTING, 6-32 x $^{3}/_{8}$ TRUSS HS, PHILLIPS	213-041
SCREW THREAD CUTTING, 5-32 x $^{3}/_{16}$ PAN H STEEL, PHILLIPS	213-044
SCREW THREAD CUTTING, 6-32 x $^{3}/_{8}$ THS	213-104
SCREW THREAD FORMING, TYPE B, $^{1}/_{4}$ PHS, PHILLIPS	213-088

http://manoman.sqhill.com

Mechanical Parts List *(continued)*

	Tektronix Part Number
SHIELD TUBE $1\frac{1}{32} \times 1\frac{15}{16}$ W/SPRING	337-008
SHIELD 5" GRATICULE LIGHT	337-187
SHIELD $\frac{1}{32} \times 1\frac{1}{4}$ OVAL W/$\frac{3}{8}$" HOLE	337-248
SHIELD, CRT	337-364
SOCKET STM7G	136-008
SOCKET STM8, GROUND	136-011
SOCKET STM9G	136-015
SOCKET STM9S	136-022
SOCKET GRATICULE LIGHT W/GROUND LUG	136-035
SOCKET CRT ASSEMBLY	136-103
SOCKET BANANA JACK ASSEMBLY, BLACK	136-106
SOCKET 4 PIN, TRANSISTOR	136-095
SPACER NYLON, CERAMIC STRIP, $\frac{1}{16}$	361-007
SPACER NYLON, CERAMIC STRIP, $\frac{5}{16}$	361-009
SPOOL ASS'Y OF MOLDED NYLON	214-210
STRIP FELT $\frac{3}{16} \times 1 \times 8$ GREY	124-022
STRIP CERAMIC $\frac{3}{4} \times 2$ NOTCHES, CLIP MOUNTED	124-086
STRIP CERAMIC $\frac{3}{4} \times 4$ NOTCHES, CLIP MOUNTED	124-088
STRIP CERAMIC $\frac{3}{4} \times 7$ NOTCHES, CLIP MOUNTED	124-089
STRIP CERAMIC $\frac{3}{4} \times 9$ NOTCHES, CLIP MOUNTED	124-090
STRIP CERAMIC $\frac{3}{4} \times 11$ NOTCHES, CLIP MOUNTED	124-091
STUD, CRT ROTATOR, 10-32 THREAD $2\frac{1}{4}$ DOWN	355-049
TAG VOLTAGE RATING	334-649
TAG S/N INSERT	334-679
TUBING PLASTIC INSUL., #10 BLACK	162-530
TUBING PLASTIC INSUL., #6 BLACK	162-532
WASHER STEEL 6L $\times \frac{3}{8} \times .032$	210-803
WASHER STEEL 8S $\times \frac{3}{8} \times .032$	210-804
WASHER RUBBER WAN 13-20	210-816
WASHER STEEL $.390 \times \frac{9}{16} \times .020$	210-840
WASHER RUBBER $\frac{1}{2} \times \frac{11}{16} \times \frac{3}{64}$ (FOR FUSE HOLDER)	210-873
WASHER BLACK $\frac{3}{8} \times .1$ SHOULDERED	210-895

http://manoman.sqhill.com

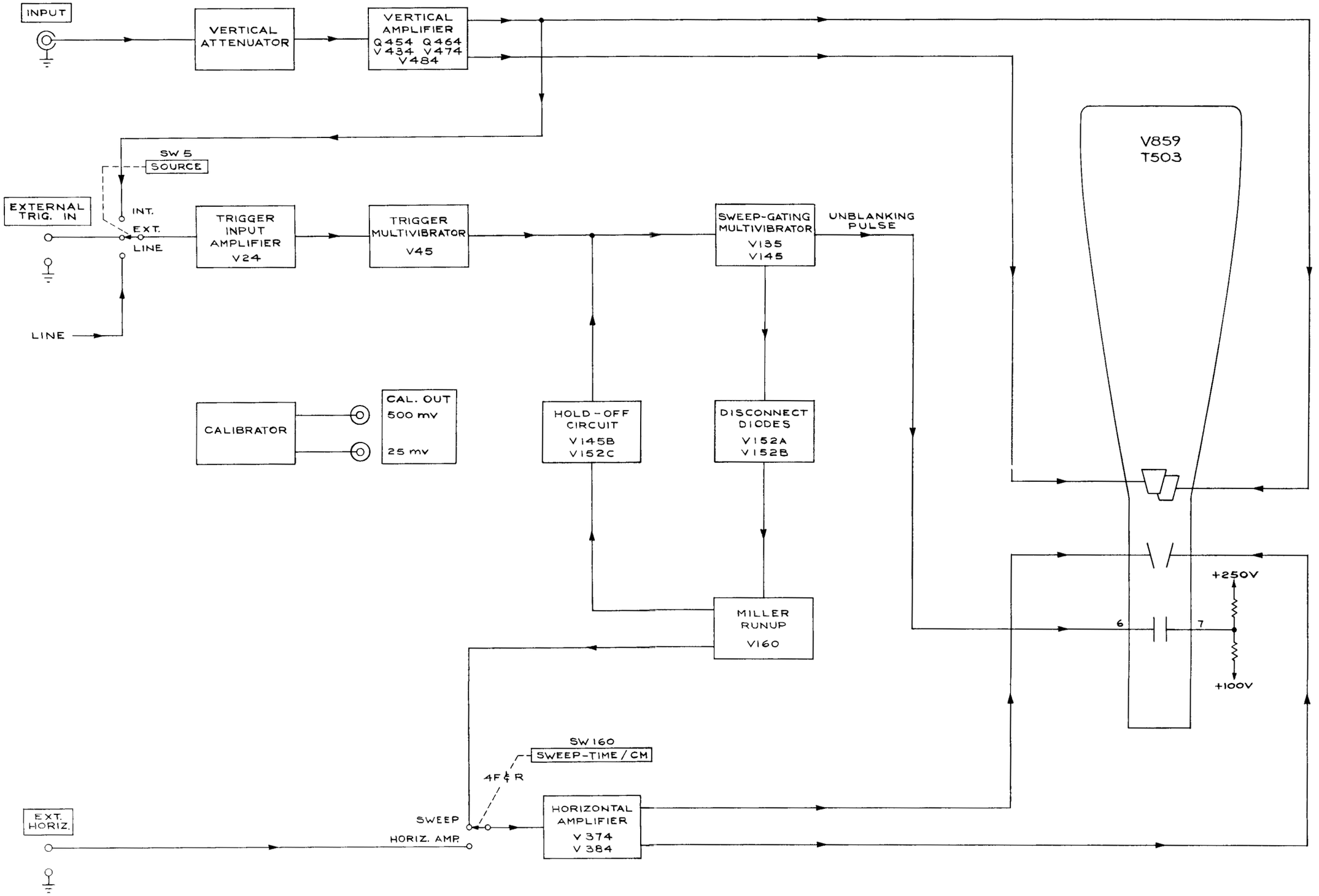

MRH
4-12-60

TYPE 504 OSCILLOSCOPE

A

BLOCK DIAGRAM

http://manuals.sqlint.com

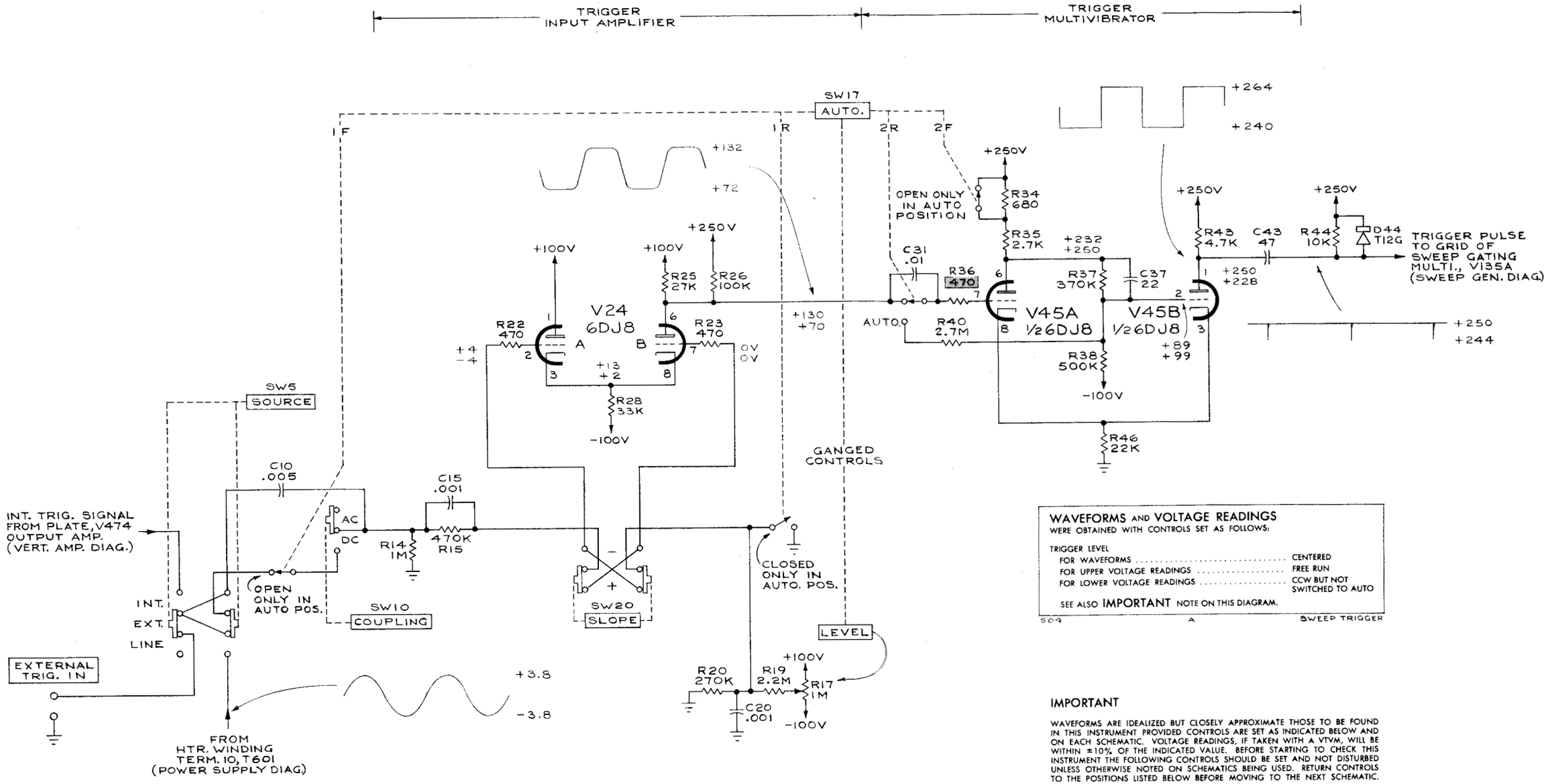

WAVEFORMS AND VOLTAGE READINGS
WERE OBTAINED WITH CONTROLS SET AS FOLLOWS:

TRIGGER LEVEL
- FOR WAVEFORMS ..... CENTERED
- FOR UPPER VOLTAGE READINGS ..... FREE RUN
- FOR LOWER VOLTAGE READINGS ..... CCW BUT NOT SWITCHED TO AUTO

SEE ALSO **IMPORTANT** NOTE ON THIS DIAGRAM.

504 A SWEEP TRIGGER

IMPORTANT

WAVEFORMS ARE IDEALIZED BUT CLOSELY APPROXIMATE THOSE TO BE FOUND IN THIS INSTRUMENT PROVIDED CONTROLS ARE SET AS INDICATED BELOW AND ON EACH SCHEMATIC. VOLTAGE READINGS, IF TAKEN WITH A VTVM, WILL BE WITHIN ±10% OF THE INDICATED VALUE. BEFORE STARTING TO CHECK THIS INSTRUMENT THE FOLLOWING CONTROLS SHOULD BE SET AND NOT DISTURBED UNLESS OTHERWISE NOTED ON SCHEMATICS BEING USED. RETURN CONTROLS TO THE POSITIONS LISTED BELOW BEFORE MOVING TO THE NEXT SCHEMATIC.

- POSITION (HORIZONTAL) ..... CENTERED
- SWEEP TIME/CM ..... 1 mSEC
- TRIGGER SOURCE ..... LINE
- TRIGGER COUPLING ..... AC
- SLOPE ..... +

SEE PARTS LIST FOR EARLIER VALUES AND S/N CHANGES OF PARTS MARKED ▒

MRH
12-8-60

SWEEP TRIGGER

http://manuals.tektronix.com

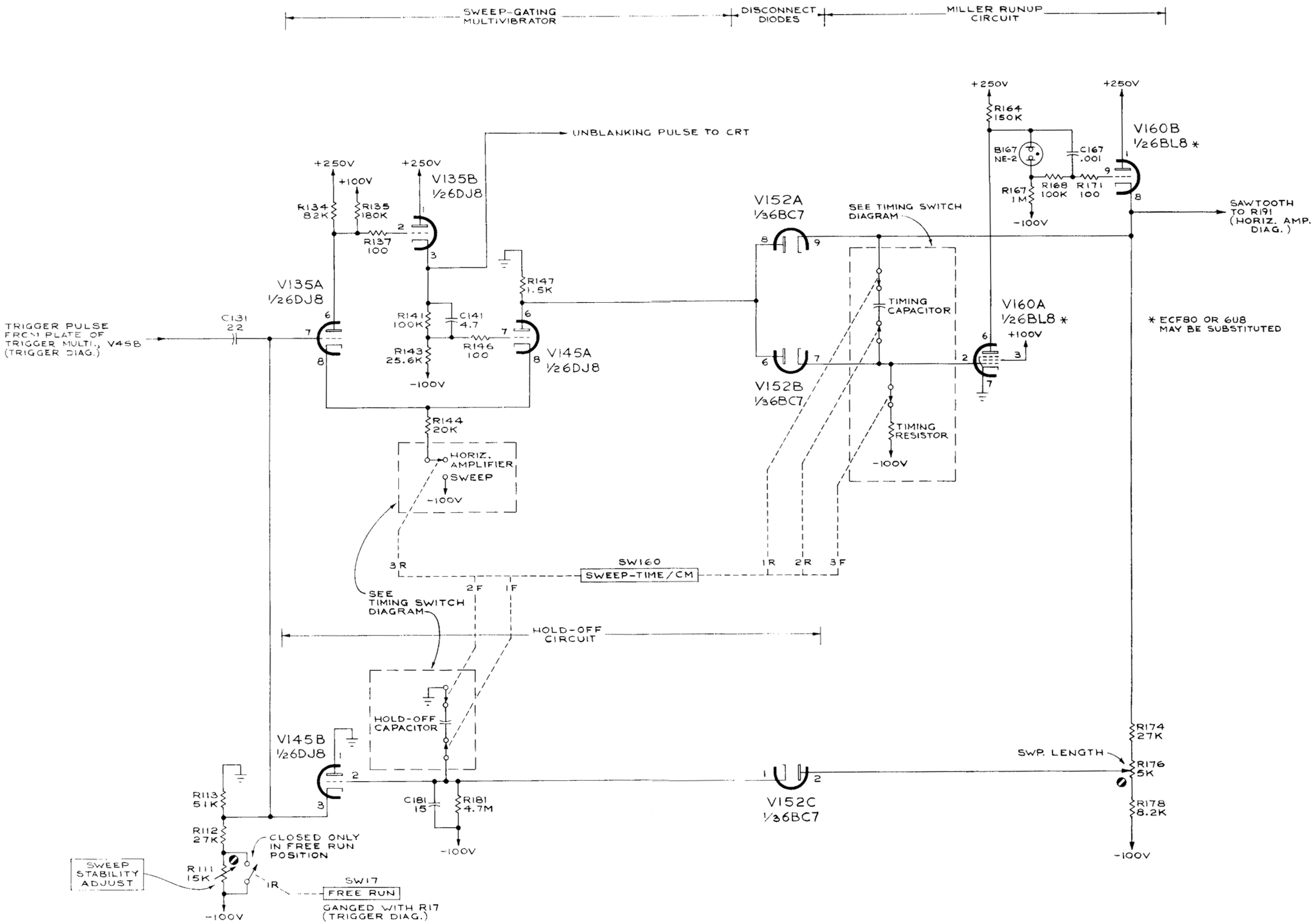

MRH
4-4-60

SWEEP GENERATOR

http://mar

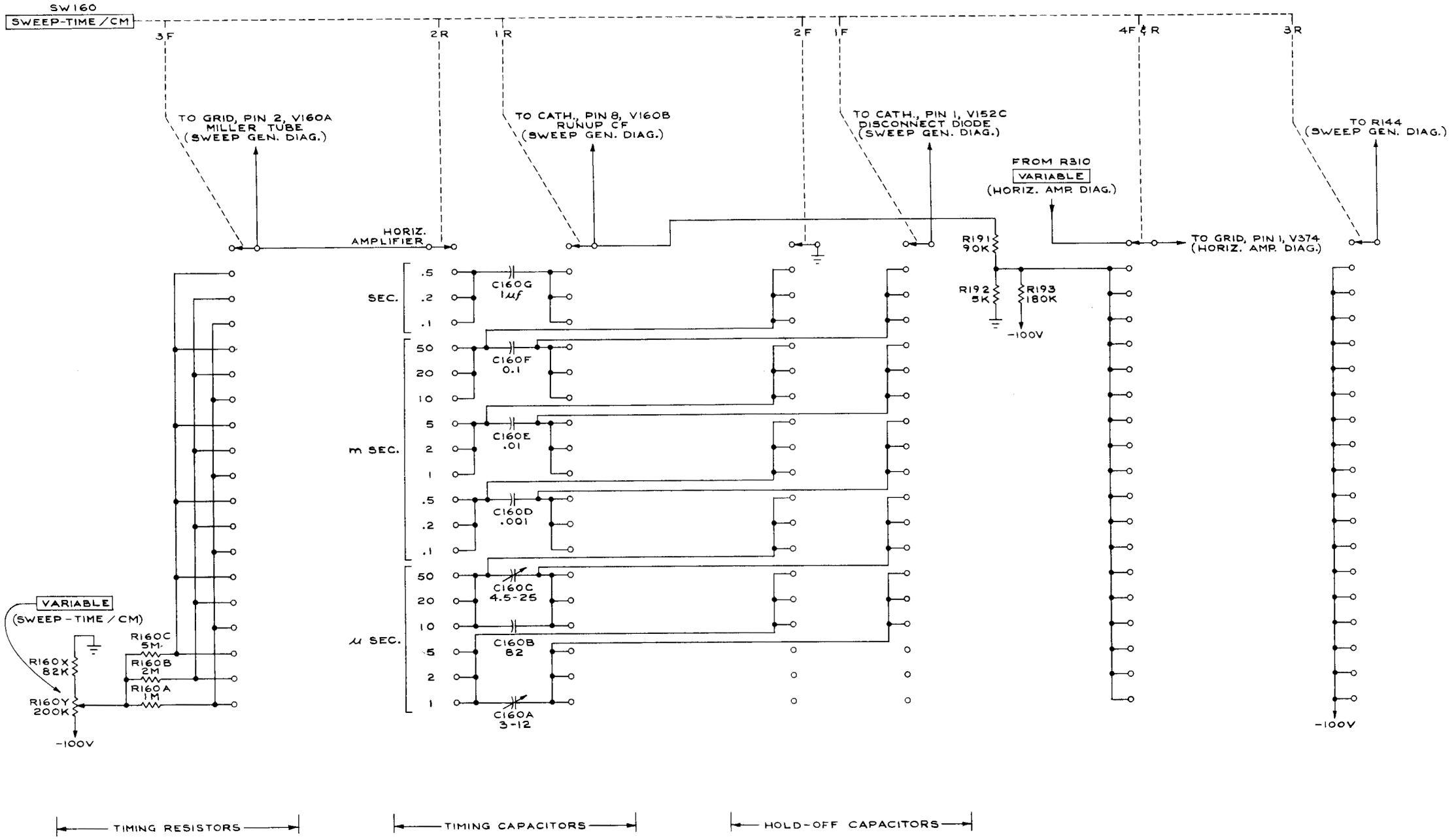

MRH
3-28-60

TYPE 504 OSCILLOSCOPE

A

TIMING SWITCH

http://manuals.scopes.com

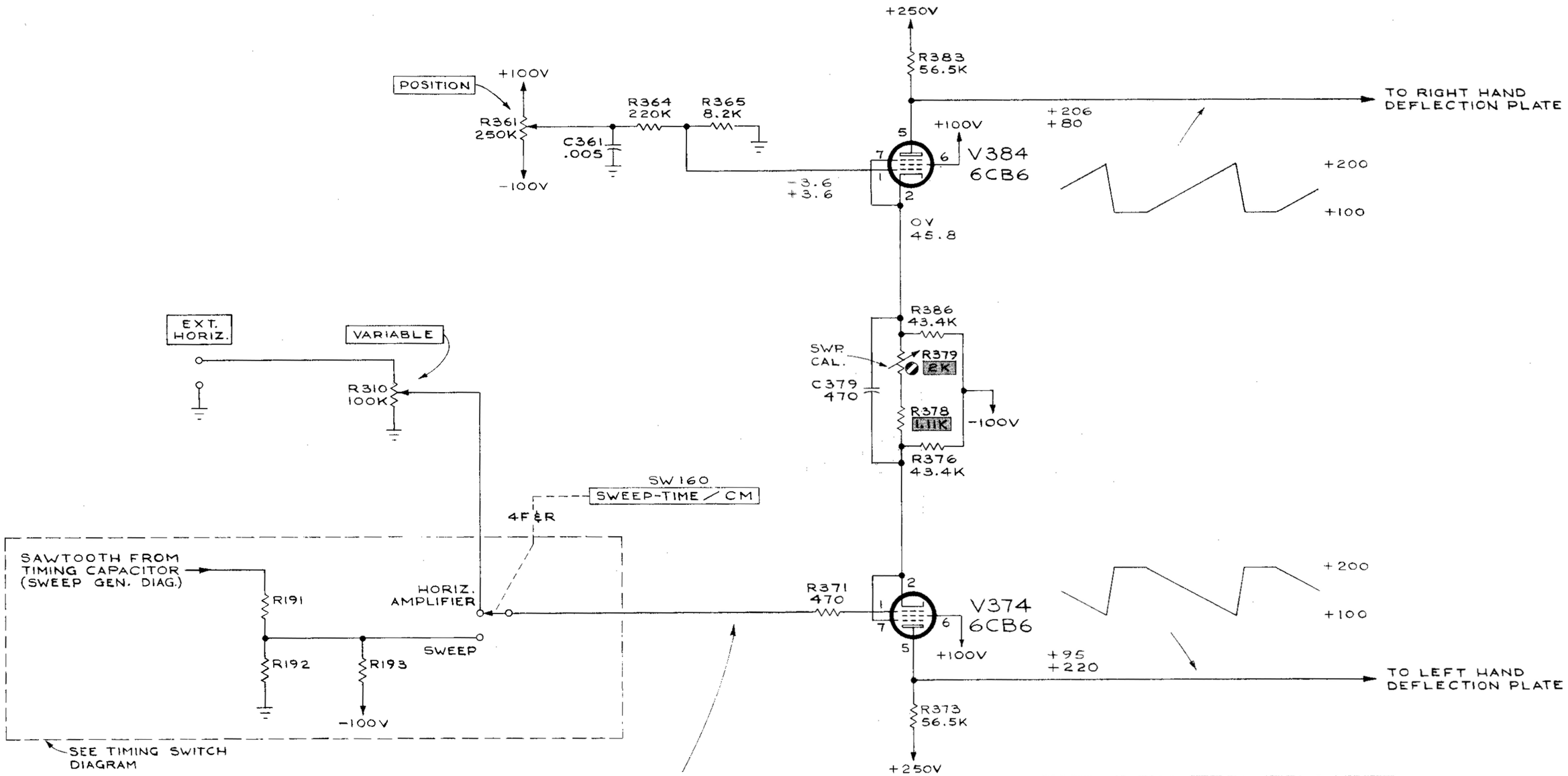

VOLTAGE READINGS WERE OBTAINED WITH CONTROLS SET AS FOLLOWS:

VARIABLE ..... .5 V/CM

HORIZONTAL POSITION

FOR UPPER VOLTAGE READINGS ..... CW

FOR LOWER VOLTAGE READINGS ..... CCW

WAVEFORMS SEE NOTE ON TRIGGER DIAGRAM

SEE ALSO **IMPORTANT** NOTE ON SWEEP TRIGGER DIAGRAM.

504 A HORIZ. AMP.

SEE PARTS LIST FOR EARLIER VALUES AND S/N CHANGES OF PARTS MARKED

MRH
12-8-60

TYPE 504 OSCILLOSCOPE B HORIZONTAL AMPLIFIER

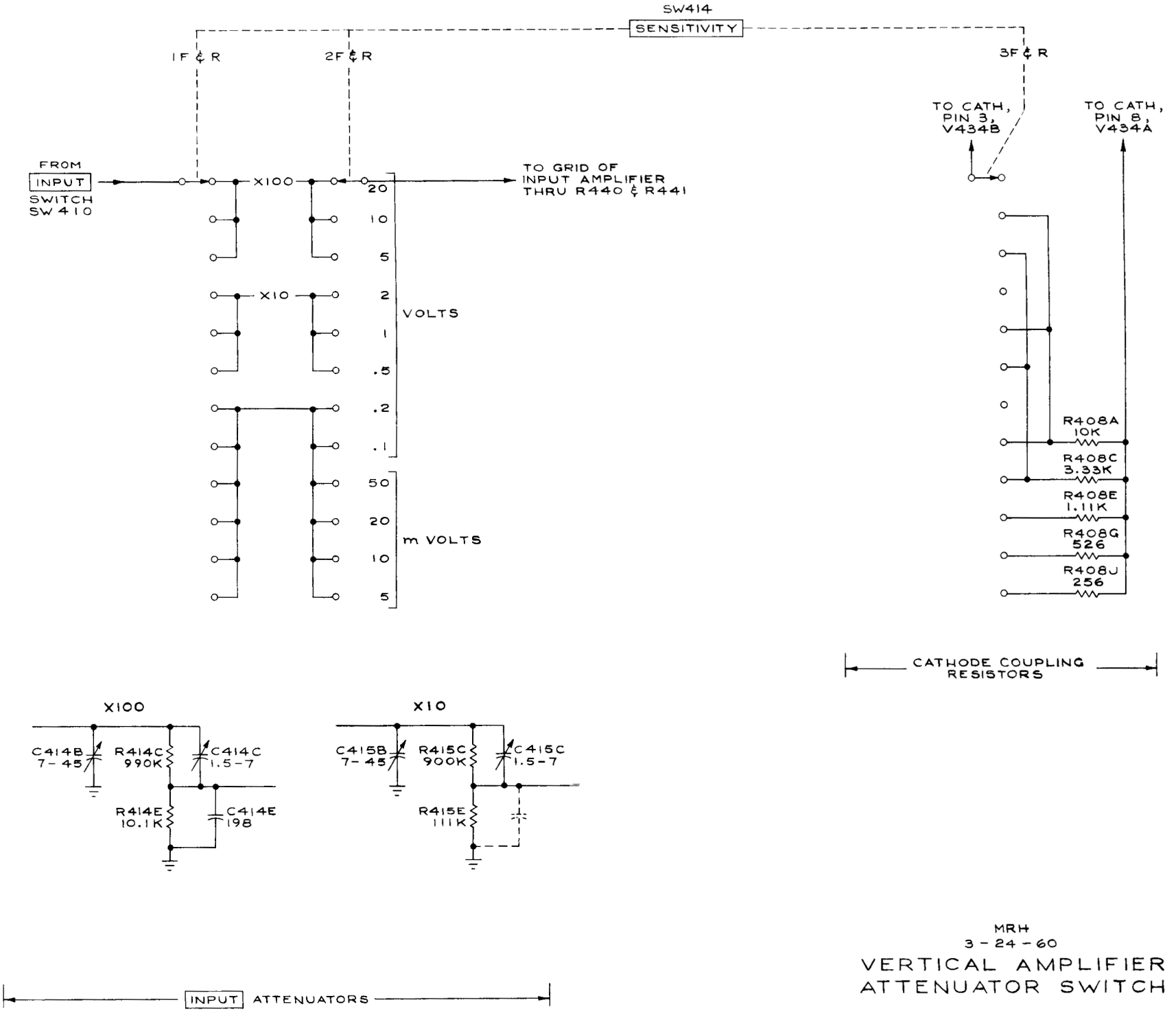

MRH
3-24-60

VERTICAL AMPLIFIER
ATTENUATOR SWITCH

http://manoman.sqhill.com

http://manoman.sqhill.com

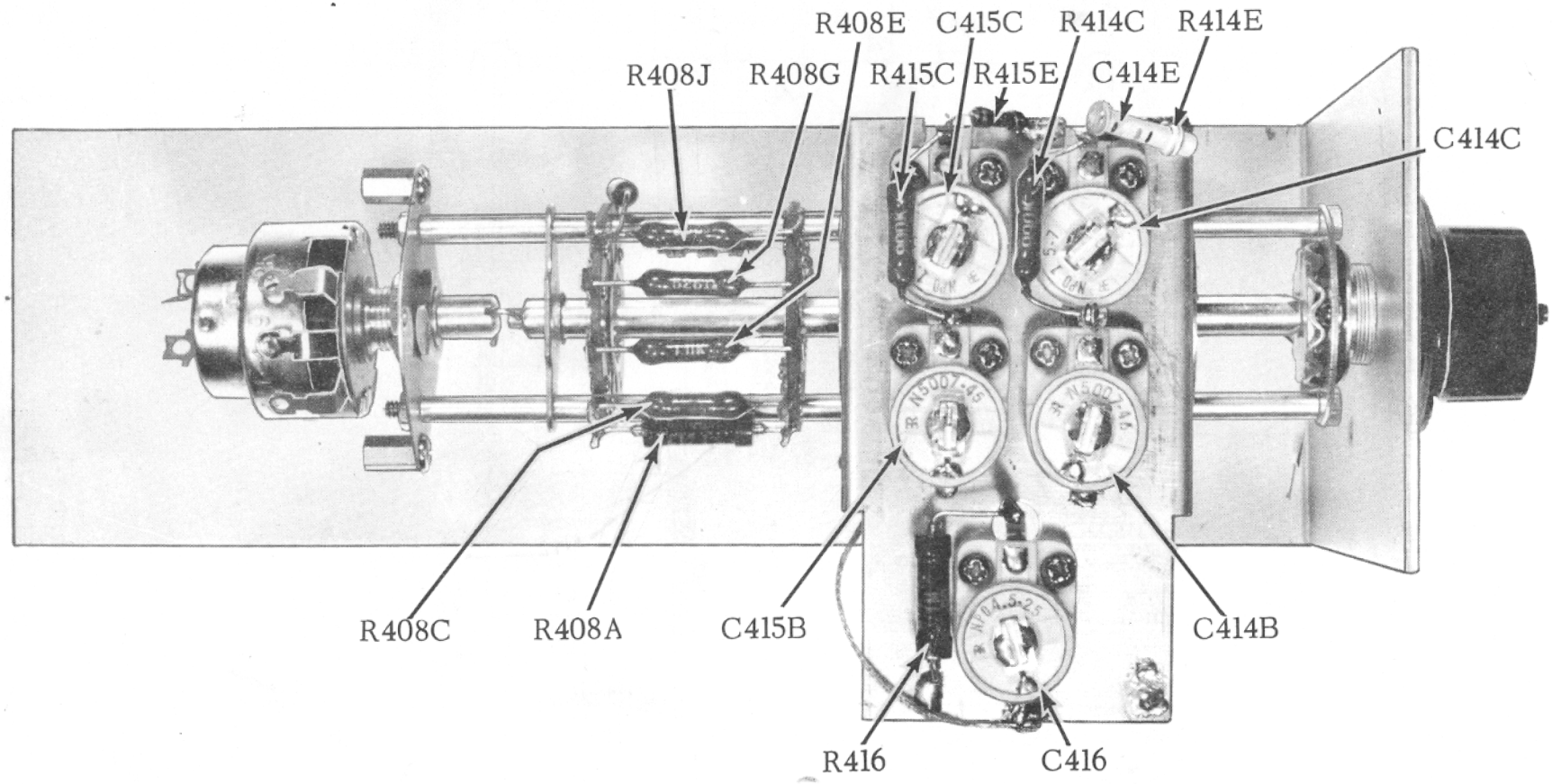

Type 504 **OUTSIDE VIEW SENSITIVITY** A

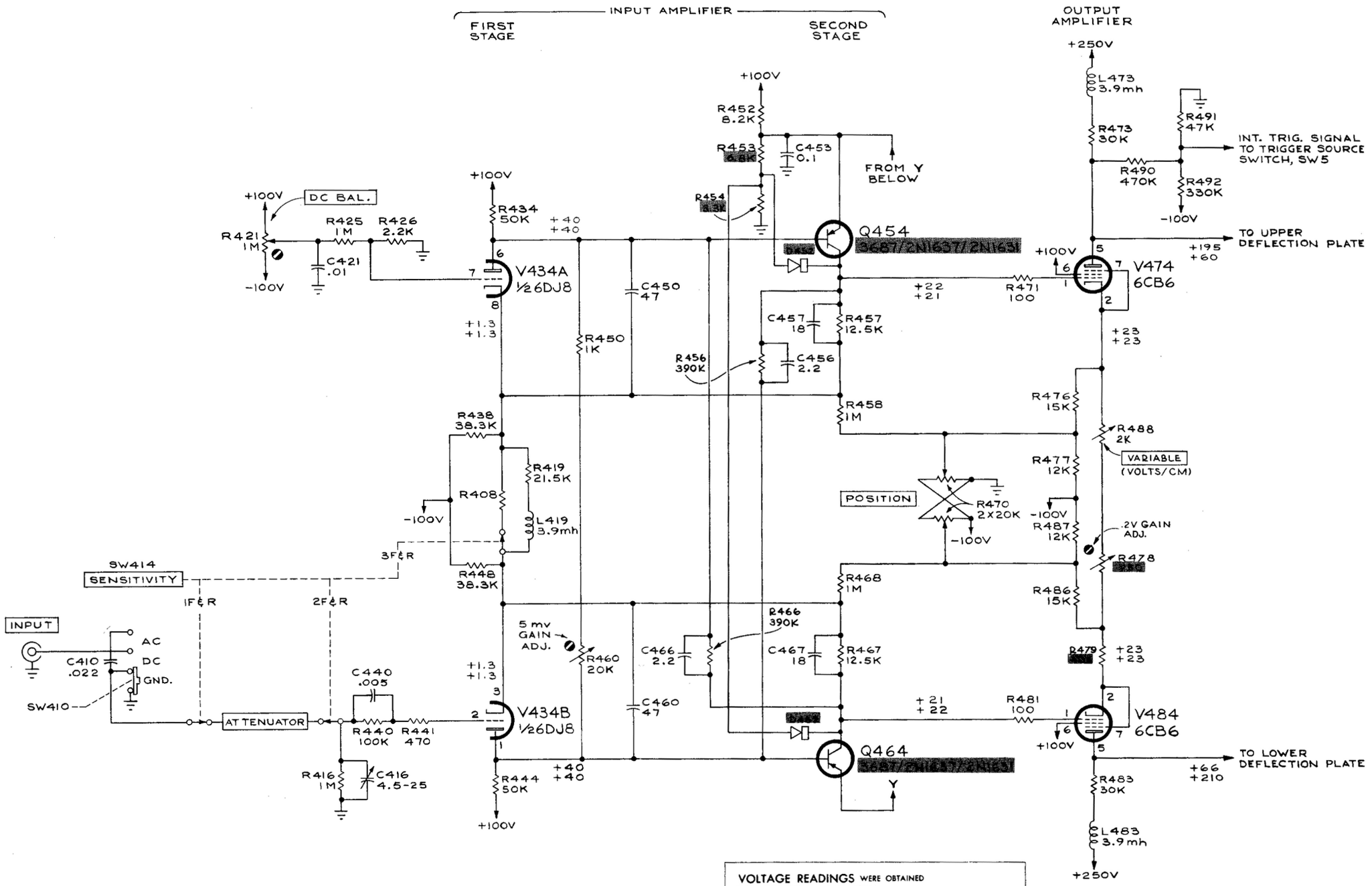

VOLTAGE READINGS WERE OBTAINED WITH CONTROLS SET AS FOLLOWS:

BOTH INPUTS	GND
SENSITIVITY	.2 VOLTS/CM
VERTICAL POSITION	
FOR UPPER VOLTAGE READINGS	CW
FOR LOWER VOLTAGE READINGS	CCW

SEE ALSO **IMPORTANT** NOTE ON SWEEP TRIGGER DIAGRAM.

504 A VERT. AMP.

SEE PARTS LIST FOR EARLIER VALUES AND S/N CHANGES OF PARTS MARKED WITH RED TINT BLOCKS

MRH
3-8-62

TYPE 504 OSCILLOSCOPE

D

VERTICAL AMPLIFIER

http://manoman.sqhm.com

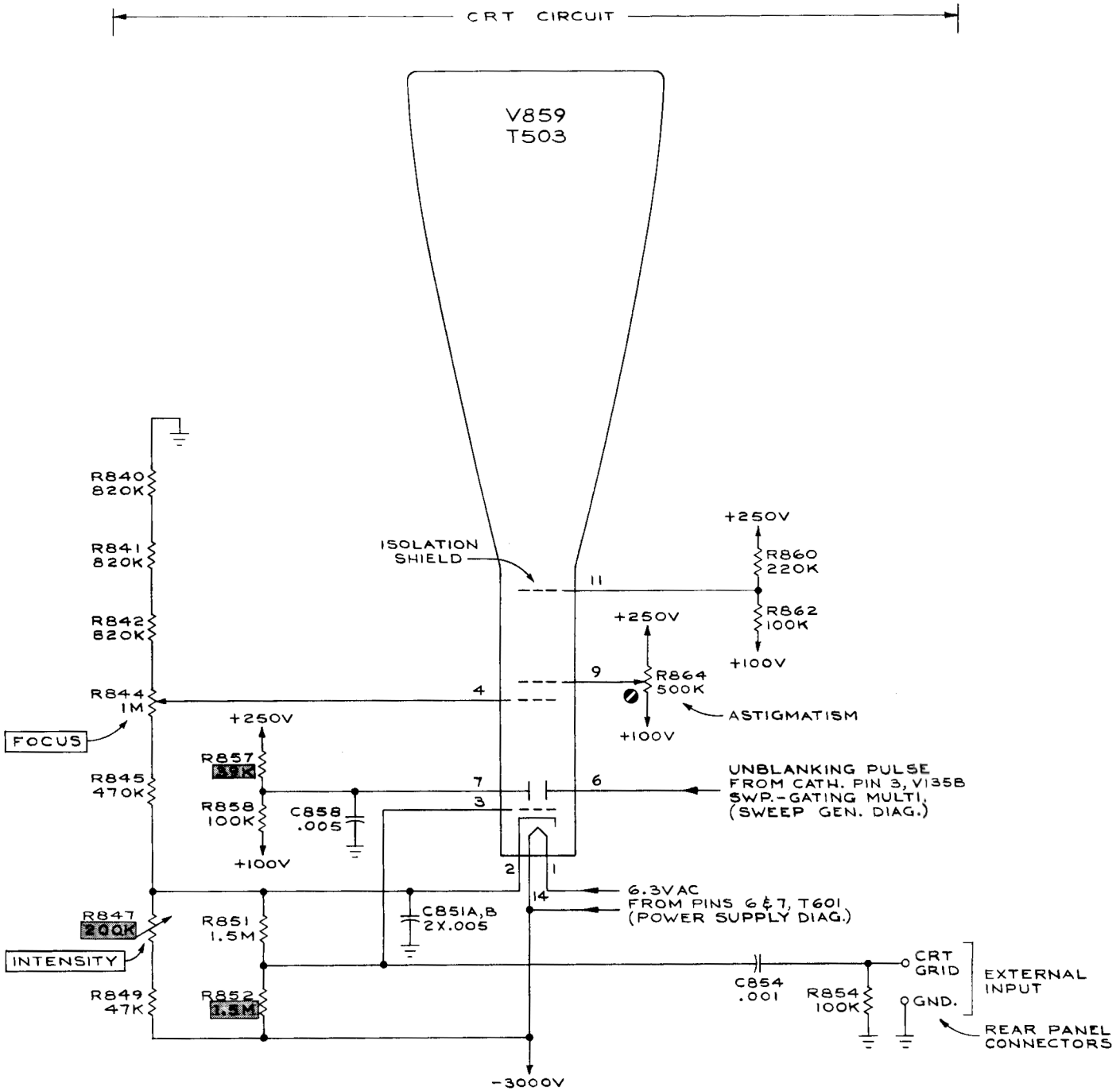

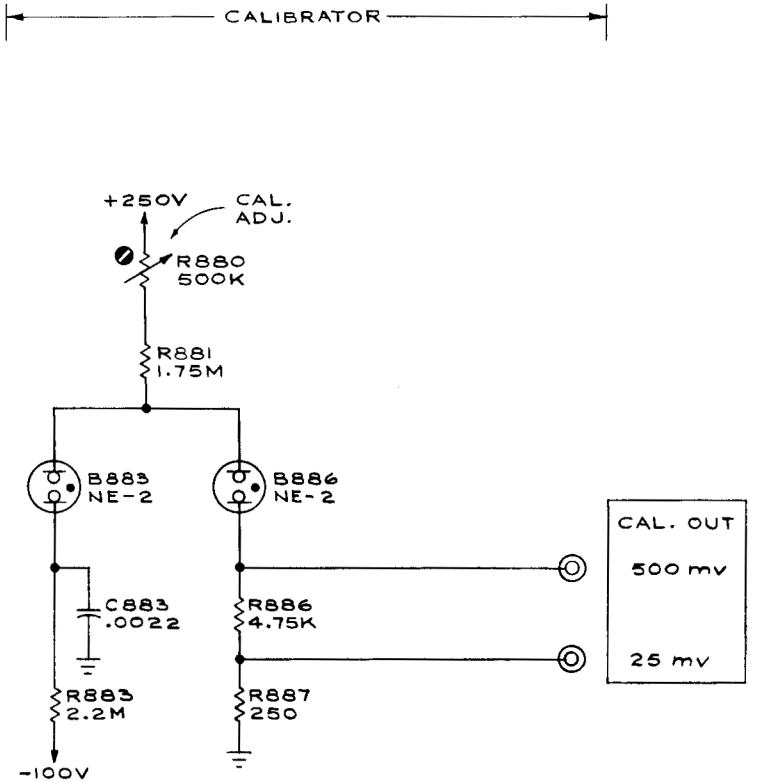

SEE PARTS LIST FOR EARLIER VALUES AND S/N CHANGES OF PARTS MARKED

MRH
7-27-61

CRT CIRCUIT & CALIBRATOR

http://manoman.sqhill.com

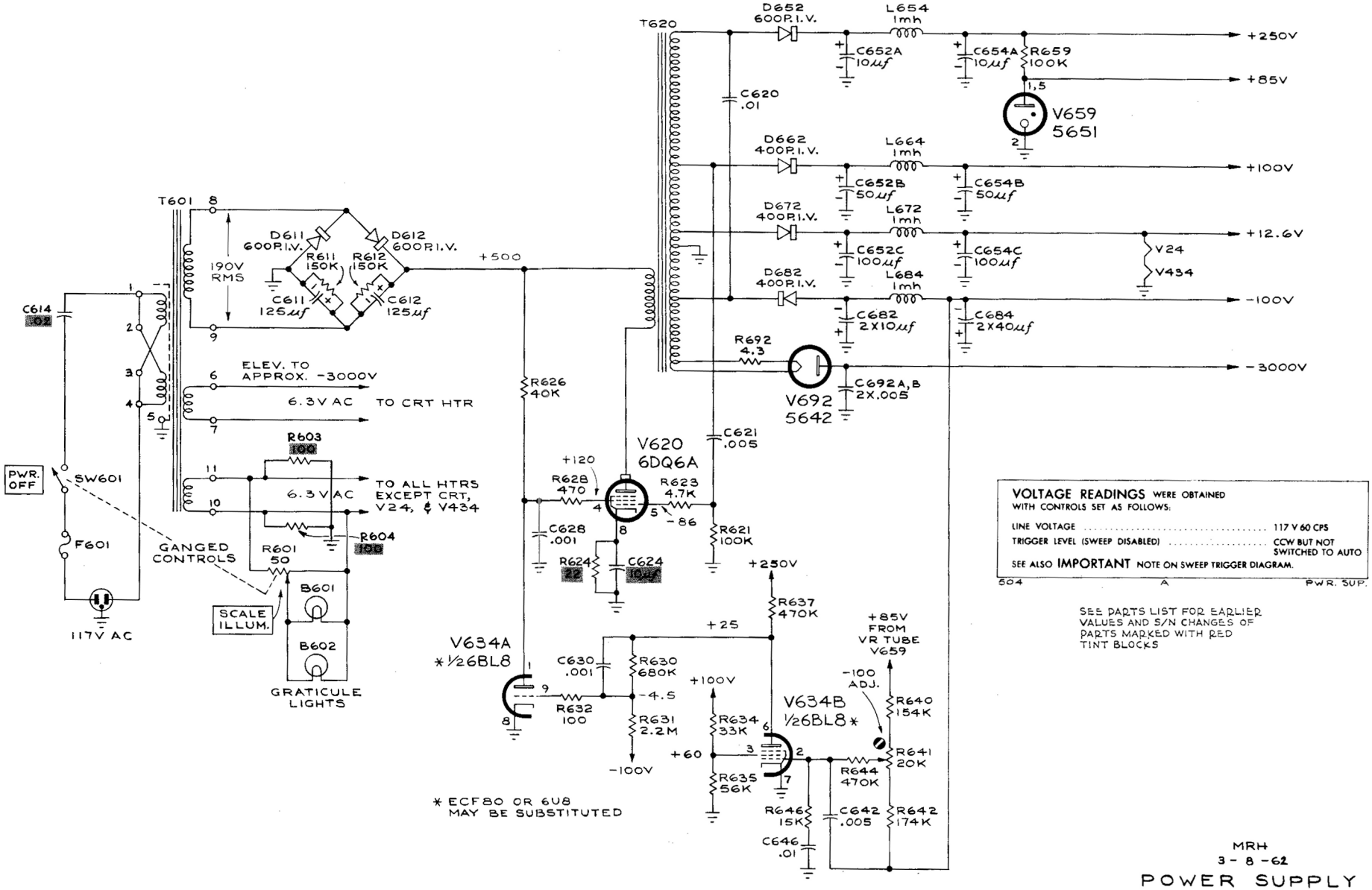

http://manomanr.sqhill.com

MANUAL CHANGE INFORMATION

At Tektronix, we continually strive to keep up with latest electronic developments by adding circuit and component improvements to our instruments as soon as they are developed and tested.

Sometimes, due to printing and shipping requirements, we can't get these changes immediately into printed manuals. Hence, your manual may contain new change information on following pages. If it does not, your manual is correct as printed.

http://manoman.sqhill.com

TYPE 504, RM504
M5772 - 504 - Tent S/N 530
M5772 - RM504 - Tent S/N 550

R26	Change to	120k	1/2w	Fixed	1%	309-091
R28	Change to	33k	1/2w	Fixed	1%	309-070

http://manoman.sqhill.com

TYPE 504 and RM504
M5653 - 504 Eff SN 500
M5653 - RM504 Eff SN 452

NOTE- The value called out for C466 (C456 in RM) in this modification supersedes the previous value called out in M5256.

C408A	added	8μμf	Cer	Fixed	500v	281-503
C408C	added	18μμf	Cer	Fixed	500v	281-542
C434†	remove	10μμf				
C466††	change to	2.2μμf	Cer	Fixed	500v	281-500
C456†††	change to	2.2μμf	Cer	Fixed	500v	281-500
L473	change to	3.9mh		Fixed		108-224
L483	change to	3.9mh		Fixed		108-224
SW414 ††	change to		SENSITIVITY		wired*	262-503
SW414 †††	change to		SENSITIVITY		wired*	262-504

†Removed from RM504 only.
††Changed in 504 only.
†††Changed in RM504 only.

SEE diagram on following page.

http://manoman.sqhill.com

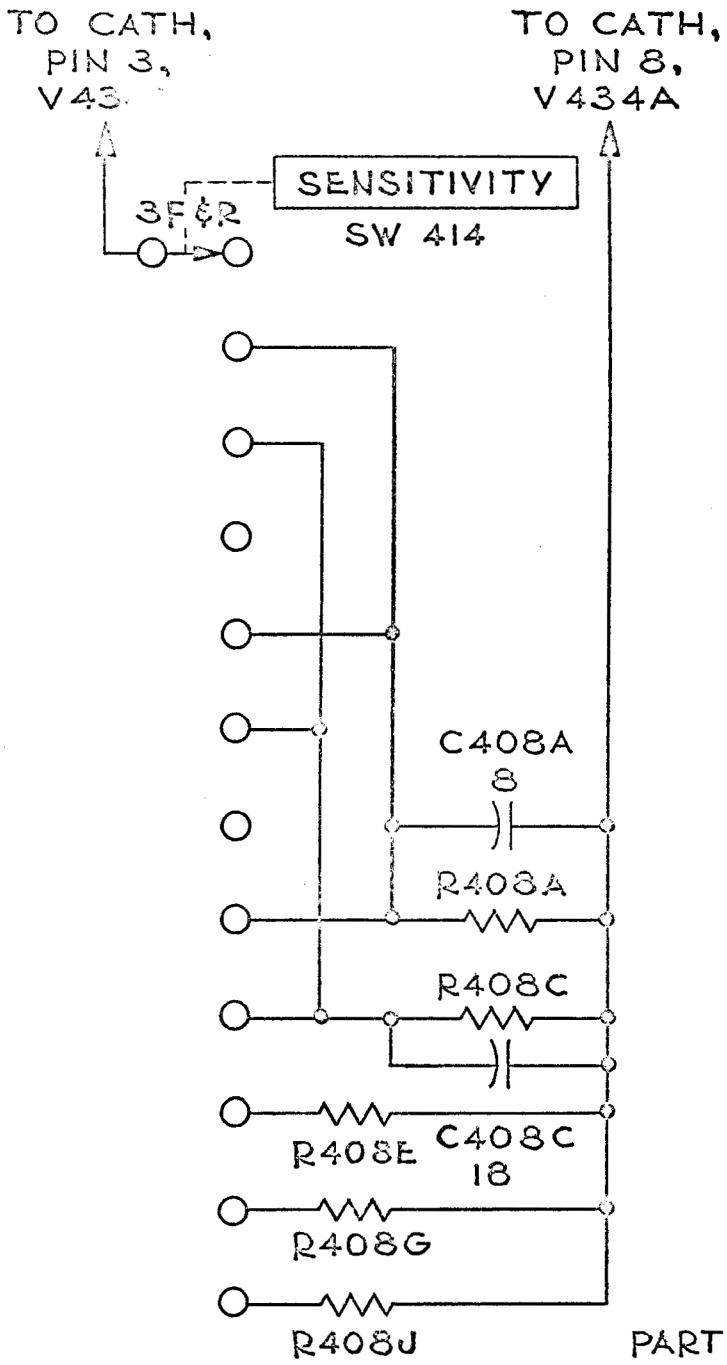

PART VERT. AMP. ATTEN. SW.

JN
03-62

http://manoman.sqhill.com

TYPE 503, RM503, 504 and RM504
M5515 - 503 - Tent SN 2215
M5515 - RM503 - Tent SN 1170
M5515 - 504 - Tent SN 490
M5515 - RM504 - Tent SN 550

C886	add	.0022μf	Discap	Fixed	50v	283-028

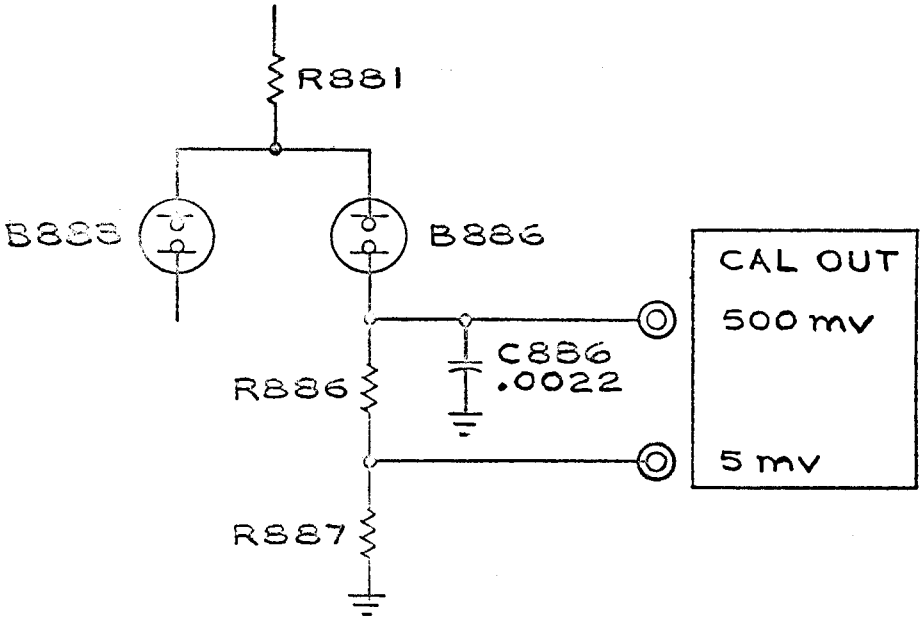

MH

PART. DIAG. CRT CKT. & CALIB.

http://manoman.sqhill.com

TYPE 504/RM504
M 5256 - 504 Tent SN 490
M 5256 - RM504 - Tent SN 440

This modification will supersede all previous modifications to these circuit numbers and the Vert Amp diagram if the SN of the instrument is at or above the serial numbers listed above.

C456	change to	1μμf	Cer	Fixed	500v	281-538
C457	change to	12μμf	Cer	Fixed	500v	281-508
C466	change to	1μμf	Cer	Fixed	500v	281-538
C467	change to	12μμf	Cer	Fixed	500v	281-508
C479 †	add	270μμf	Cer	Fixed	500v	281-543
R451	add	33k	1w	comp	5%	303-333
R453	change to	10k	1/2w	comp	5%	301-103
R454	remove	3.3k				
R461	add	910Ω	1/2w	comp	5%	301-911

†Used in RM504 only. Connected in parallel with R479.

http://manoman.sqhill.com

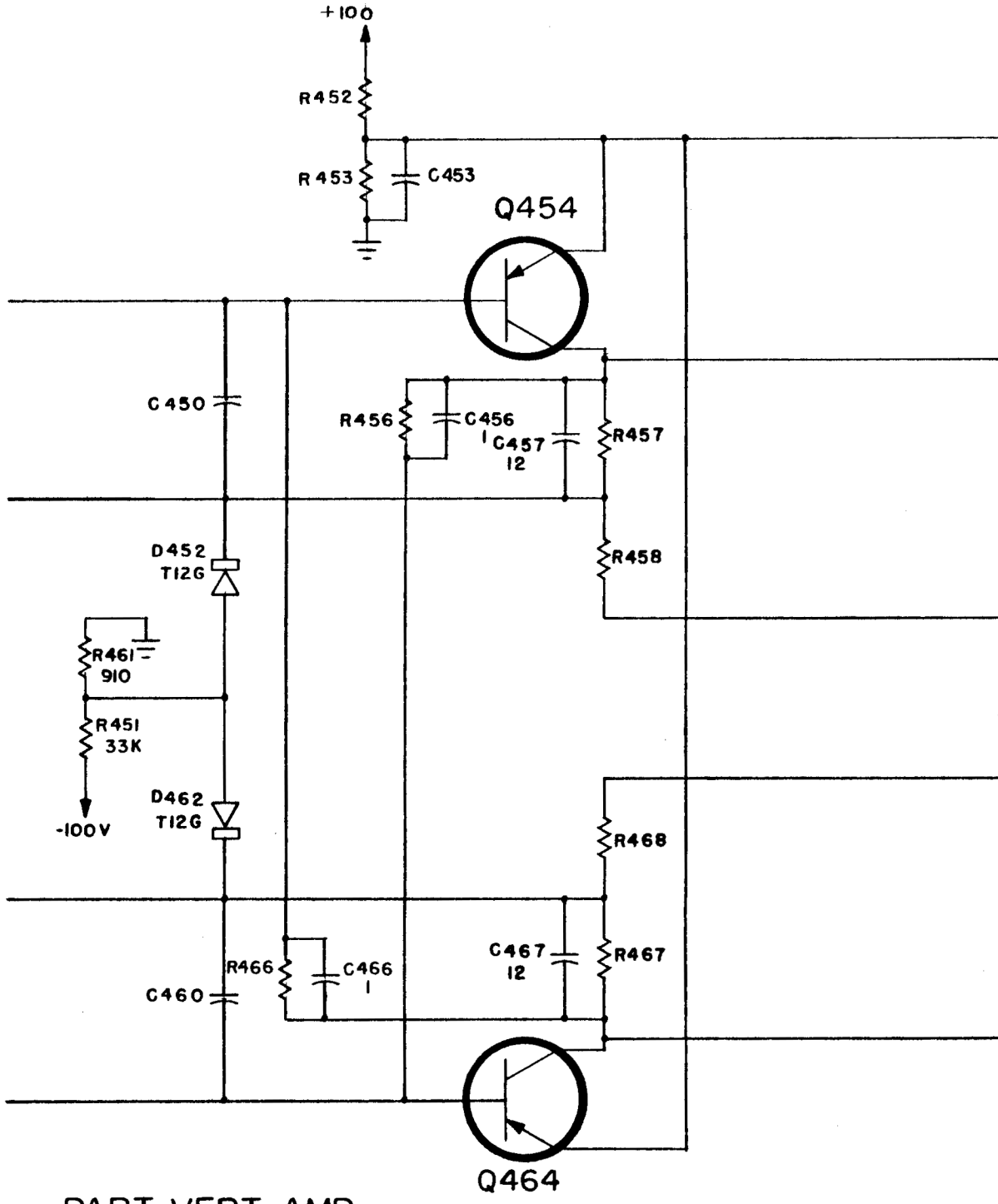

PART VERT AMP

http://manoman.sqhill.com

TYPE RM504
Parts List Correction (3)

B603	add	Incandescent	GE#12	Pilot Light			150-018
C434	should read		10μμf	cer		500v	281-504
C614	should read		X330-up				
C624	should read		X330-up				
R36	should read		X260-up	470Ω			
R112	should read	all ranges	27k	1/2w	comp	5%	301-273
R113	should read	all ranges	51k	1/2w	comp	5%	301-513
R361	should read	all ranges	250k	Var	POSITION		311-206
R453	should read		101-329	10k			
			330-up	6.8k			
R454	should read		X330-up				
R601	should read	101-409	50Ω	Var	SCALE ILLUM		311-055
		410-up	50Ω	Var	SCALE ILLUM		311-262
R603	should read		X330-up	100Ω			
R604	should read		X330-up	100Ω			
R624	should read		X330-up	22Ω			
R844	should read	101-409	1 meg	Var	FOCUS		311-041
		410-up	1 meg	Var	FOCUS		311-261
R847	should read	101-329	500k				
		330-409	200k				
		410-up	200k	Var	INTENSITY		311-264
R852	should read		101-329	2.2 meg			
			330-up	1.5 meg			
D452	should read		X330-up	T12G			
D462	should read		X330-up	T12G			
T601	should read		101-269				
			270-up				
					wired		unwired
SW17	should read		TRIG LEVEL		262-351		260-325
SW160	should read		TIME/CM		262-353		260-327
SW414	should read		SENSITIVITY		262-352		
SW601	should read		POWER OFF				260-134
TK601	should read		Thermal Cutout		150°		260-336

http://manoman.sqhill.com

TYPE 504

Parts List Correction (3)

C160B	should read	use 281-574					
C614	should read	X480-up	.02μf	Discap		1400v	283-022
R378	should read	X136-479	1.2k				
		480-up	1.11k	1/2w	Prec.	1%	309-284
R379	should read	101-479	5k				
		480-up	2k	Var	Swp Cal	use	311-186
R478	should read	101-479	2k				
		480-up	750Ω	Var	.2v	Gain Adj	311-234
R479	should read	X480-up	402Ω	1/2w	Prec	1%	309-102
R601	add footnote:	Ganged with SW601. Furnished as a unit.					
SW601	add footnote:	Ganged with R601. Furnished as a unit.					

http://manoman.sqhill.com

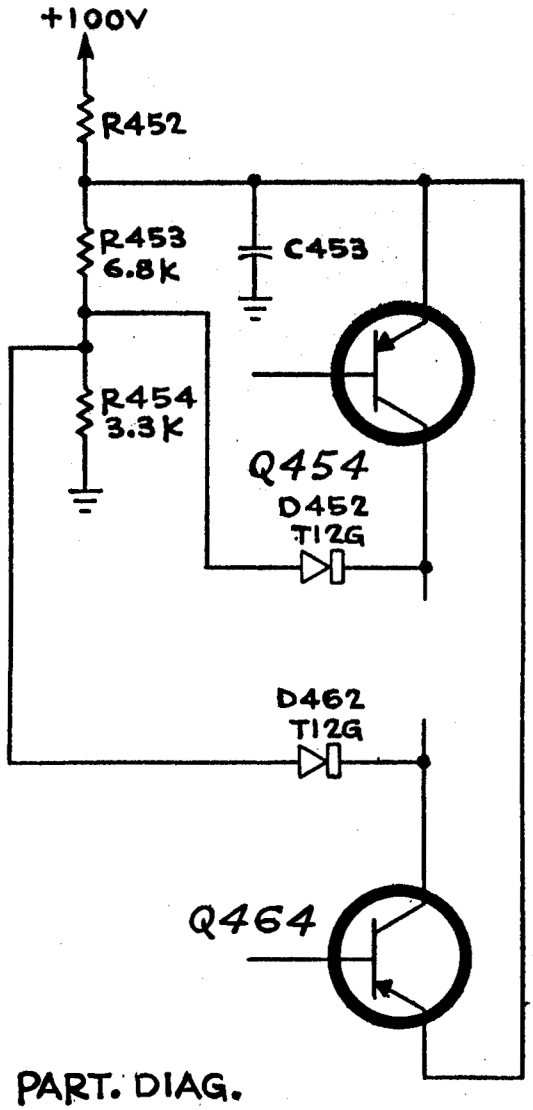

PART. DIAG.
VERT. AMPLIFIER

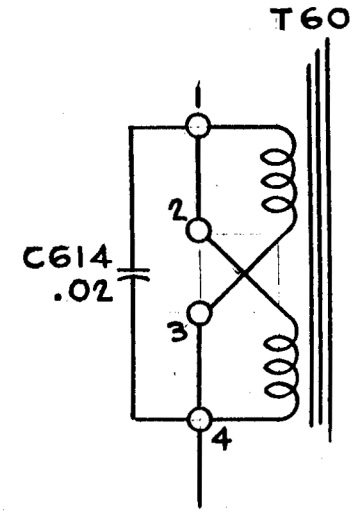

PART. PWR. SPLY.
DIAGS.

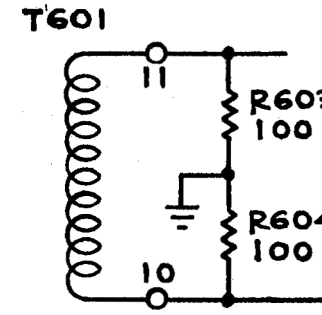

http://manoman.sqhill.com