Tektronix®
COMMITTED TO EXCELLENCE

data sheet

CSG PUBLICATIONS/RESEARCH

P6451 DATA ACQUISITION PROBE

010-6451-01

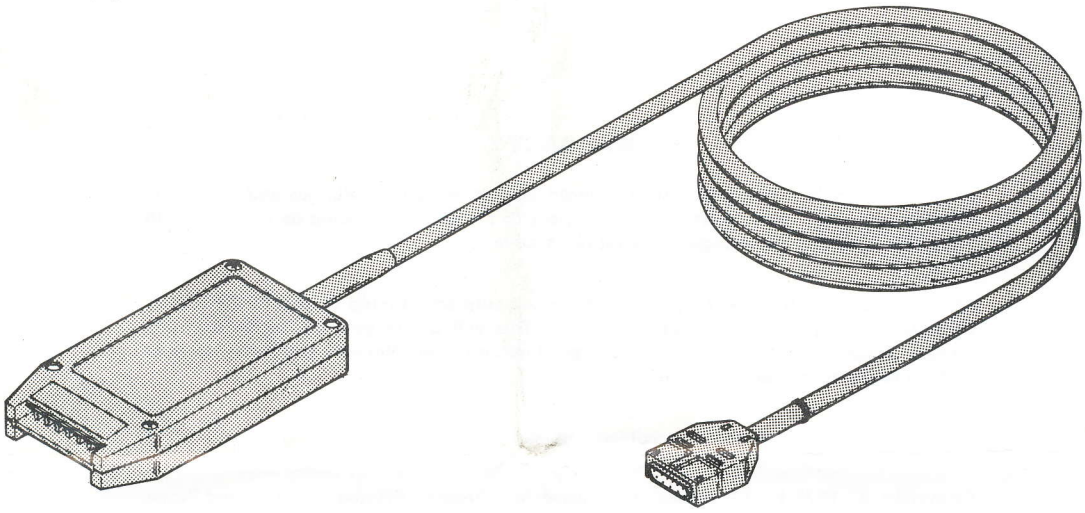

The P6451 is a nine-channel active probe designed for use with digital circuit analysis instruments. The P6451 consists of two hybrid integrated circuits that comprise nine FET amplifiers with differential ECL outputs. All input channels of the hybrid circuits are protected from damage by static discharges. An input resistance of 1 megohm allows the circuit under test to perform close to normal operating conditions.

Probe input threshold levels are established by a voltage source supplied by the test instrument. The P6451 outputs are compatible with test instruments having differential ECL line receivers (i.e., type 10115 or 10216) with 75 ohm differential input termination.

All probe-input lead connectors lock into the probe head when the lead is pulled on, but are easily detached by pulling only on the connector. The signal leads come in a set of 10 colors.

NO. 062-2372-00
DATE APRIL 1977 (R

COPYRIGHT © 1976
TEKTRONIX, INC.
ALL RIGHTS RESERVED

WARRANTY

All TEKTRONIX instruments are warranted against defective materials and workmanship for one year. Any questions with respect to the warranty should be taken up with your TEKTRONIX Field Engineer or representative.

All requests for repairs and replacement parts should be directed to the TEKTRONIX Field Office or representative in your area. This will assure you the fastest possible service. Please include the instrument Type Number or Part Number and Serial Number with all requests for parts or service.

Specifications and price change privileges reserved.

Copyright © 1976 by Tektronix, Inc., Beaverton, Oregon. Printed in the United States of America. All rights reserved. Contents of this publication may not be reproduced in any form without permission of Tektronix, Inc.

U.S.A. and foreign TEKTRONIX products covered by U.S. and foreign patents and/or patents pending.

TEKTRONIX is a registered trademark of Tektronix, Inc.

SPECIFICATIONS

Electrical

Input Resistance	1 MΩ within 5%.
Input Capacitance	5 pF within 1 pF.
Maximum Dynamic Input Voltage	10 V above input threshold level.
Maximum Nondestructive Voltage to Input	60 V (dc + peak ac).
Power Requirements	
Voltage	4.7 V to 5.3 V.
Current	⩽260 mA at 5 V.

Environmental

Temperature	
Storage	−55° to +75°C.
Operating	0° to +50°C.
Altitude	
Storage	To 50,000 feet.
Operating	To 15,000 feet.

Physical

Weight (Probe Only)	204 gms (7.1 oz).
Length	
Probe Head and Cable	2 m (6.5 ft).
Input Leads	40 cm (15.7 in).

OPERATING CONSIDERATIONS

CAUTION

Make sure the probe connector is correctly aligned with the test instrument connector. Damage to the terminals can result from forcing the connector into the test instrument connector.

Probe Input Leads

To insert a probe lead, push the connector into the probe head as shown in Figure 1. Be sure the correct side of the connector is facing upward. To remove a probe lead, place your fingernail on the connector and pull.

To minimize the pickup of electromagnetic interference, input leads should be kept as short as possible. However, to avoid adding errors to critical timing measurements, input leads should all be the same length.

CAUTION

To avoid damage to the probe, do not connect the ground lead to a voltage source above or below ground reference.

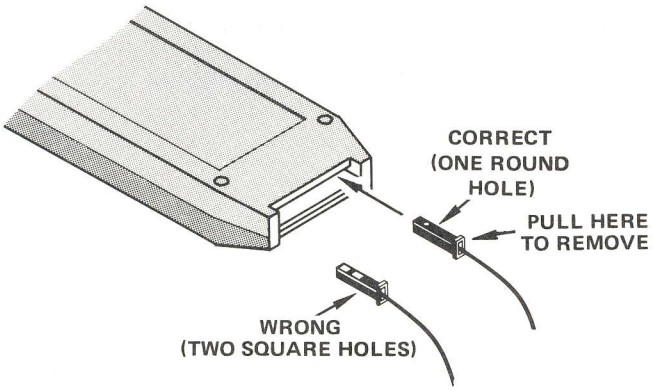

Figure 1. Installation of input lead connectors.

MAINTENANCE INSTRUCTIONS

Only qualified service personnel should use the following service instructions. Unless you are qualified to do so, do not perform maintenance in this instrument.

The P6451 Probe is designed to withstand normal operation and handling. However, if the probe fails or breaks, replacement parts are available. See Replaceable Parts List for part numbers.

Cleaning

Dirt that accumulates on the probe head can be removed with a soft cloth dampened in a mild detergent and water solution. Abrasive cleaners should not be used.

CAUTION

Avoid the use of chemical cleaning agents which might damage the plastics used in this instrument. In particular, avoid chemicals which contain benzene, toluene, xylene, acetone or similar solvents.

Recommended cleaning agents are isopropyl alcohol (Isopropanol) or ethyl alcohol (Fotocol or Ethanol).

Contaminated contact areas of the connectors, hybrids, and circuit board can be cleaned with a cotton-tipped applicator dipped in a recommended cleaning agent.

Probe Head Component Access

1. Remove 4 screws from the probe body.
2. While pulling apart the 2 halves of the probe body, note which half of the body covers which side of the circuit board.
3. Replace the defective components.
4. When reinstalling the circuit board in the probe body, be sure the body half with the channel identification label covers the circuit-board side with the channel input pins.
5. Replace the 4 screws that hold the probe body together.

Troubleshooting

The following information is provided to help troubleshoot the P6451. Troubleshooting information contained in the associated test-instrument instruction manual should be used with the following information to aid in locating the trouble.

1. ISOLATE TROUBLE TO A CIRCUIT. To determine if the trouble is in the probe or the test instrument, use the troubleshooting information in the instruction manual for the test instrument. If the probe is found to be defective, proceed with step 2.

2. VISUAL CHECK. Remove the 2 halves of the probe body (refer to Probe Head Component Access procedure). Check the probe for visible indications such as broken wires, damaged circuit board, damaged components, etc. Repair or replace any of these defects. If there are no visible indications of a defect, proceed with step 3.

3. CHECK SUPPLY VOLTAGE. The supply voltage to the P6451 can have various values depending upon the voltage level used in the test instrument. Refer to the probe schematic and the test instrument instruction manual for the supply voltage assigned to the probe.

If all the channels are affected by the trouble, check the supply voltages VCC, VDD, and VEE. If one or more of the channels are operating correctly, proceed with step 4.

NOTE

Supply voltages are measured with respect to the test instrument chassis ground.

+VCC = Chassis Ground	–VEE = Chassis Ground
Typical Voltage	Typical Voltage
+VCC = 0 V	+VCC = +5 V
+VDD = –0.5 V	+VDD = +4.5 V
–VEE = –5 V	–VEE = 0 V

a. If VCC does not have its assigned voltage, check the VCC cable wire (RED) for continuity. No continuity in cable, proceed to step 5.

b. If VEE does not have its assigned voltage, check the VEE cable wire (VIO) for continuity. No continuity in cable, proceed to step 5.

c. If the voltage at VDD is the same as VEE, check diode CR4 for open. Diode open, replace CR4.

d. If the voltage at VDD is the same as VCC, check diode CR4 for short. Diode shorted, replace CR4.

4. **CHECK HYBRID OPERATION.** If the supply voltages are correct, check for a defective channel on one of the hybrids.

a. Set the input threshold level of the test instrument to 0 volts.

b. Connect a signal lead from a channel input on the probe to a +1 volt to −1 volt, 1 KHz square-wave signal source.

c. With a test oscilloscope, check the + output (noninverting) and − output (inverting) for the correct output waveform. See Figure 2 for typical waveforms.

d. If an output signal is present on the circuit board, but not present at the cable connector, check the cable wire for continuity.

e. If the hybrid is found to be defective, proceed to step 5.

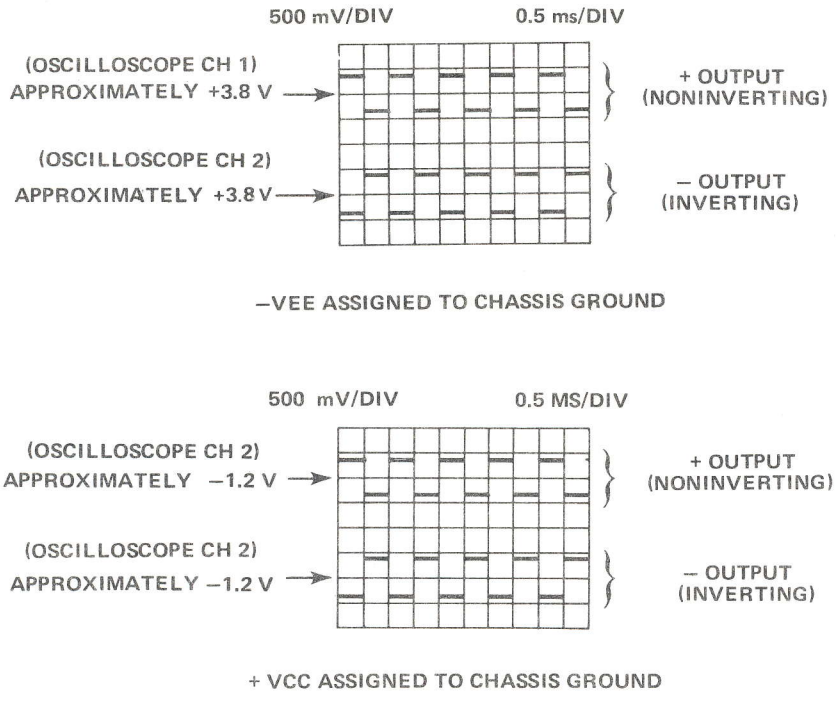

Figure 2. Typical channel output waveforms vs. supply voltage assigned.

5. OBTAINING REPLACEMENT PARTS. All electrical and mechanical part replacements for the P6451 can be obtained through your local Tektronix Field Office or representative.

When ordering replacement parts from Tektronix, Inc., include the following information:

(a) Instrument type.

(b) Instrument date code.

(c) A description of the part (if electrical, include circuit number).

(d) Tektronix part number.

For more information or assistance on troubleshooting the P6451, contact your local Tektronix Field Office or representative.

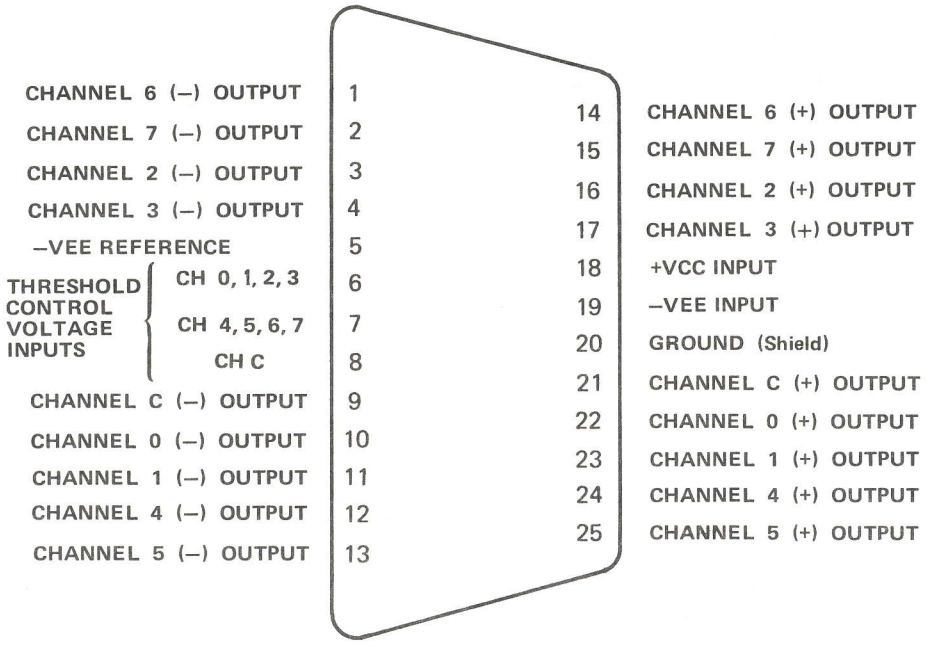

Figure 3. Probe connector pin assignment (end view).

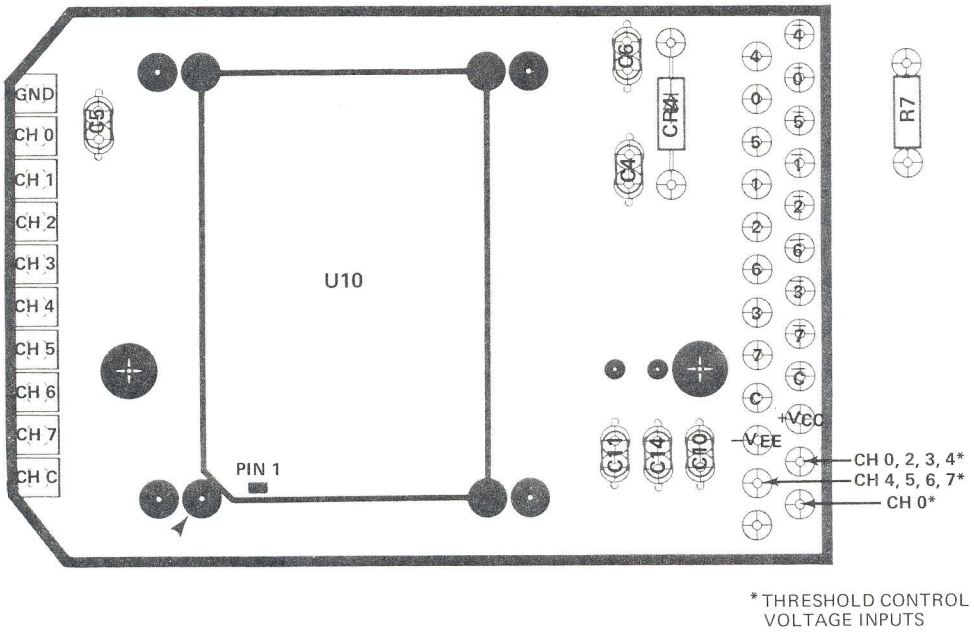

Fig. 4 Component Locations on Circuit Board

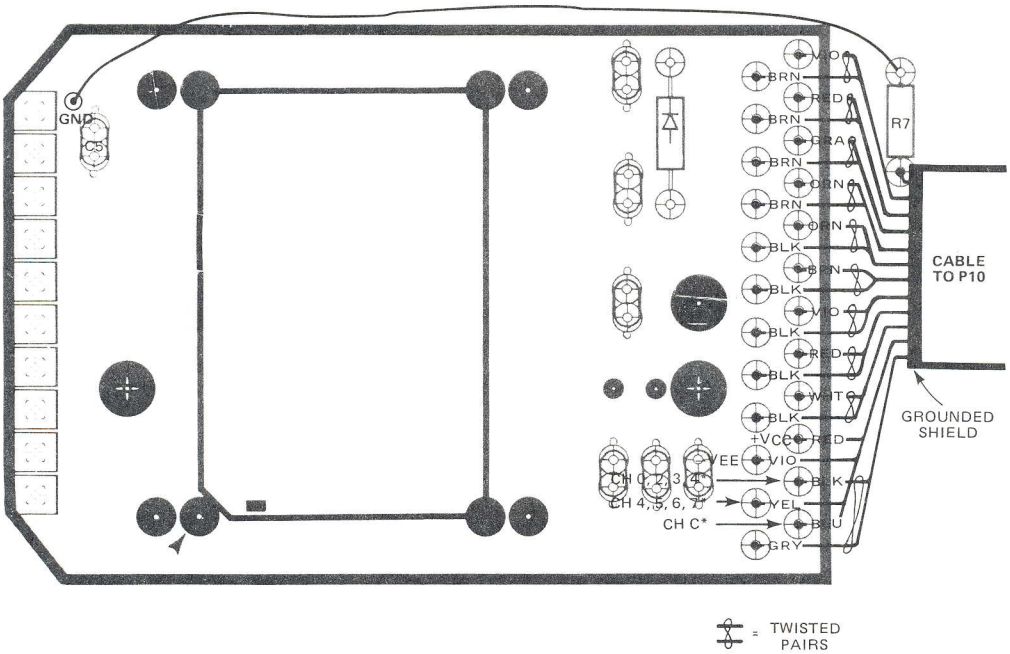

Fig. 5 Cable Installation Diagram

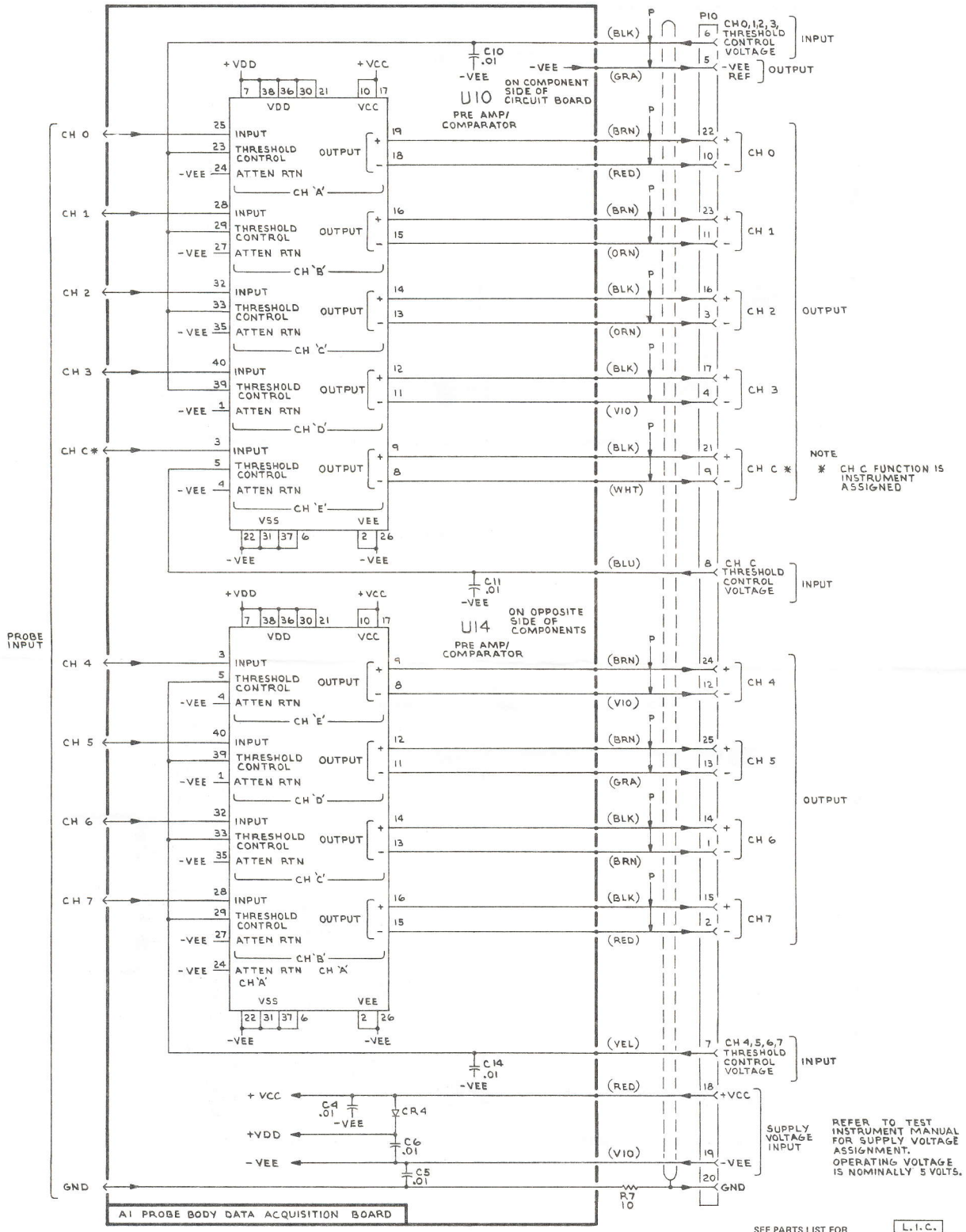

P6451

DATA ACQUISITION PROBE

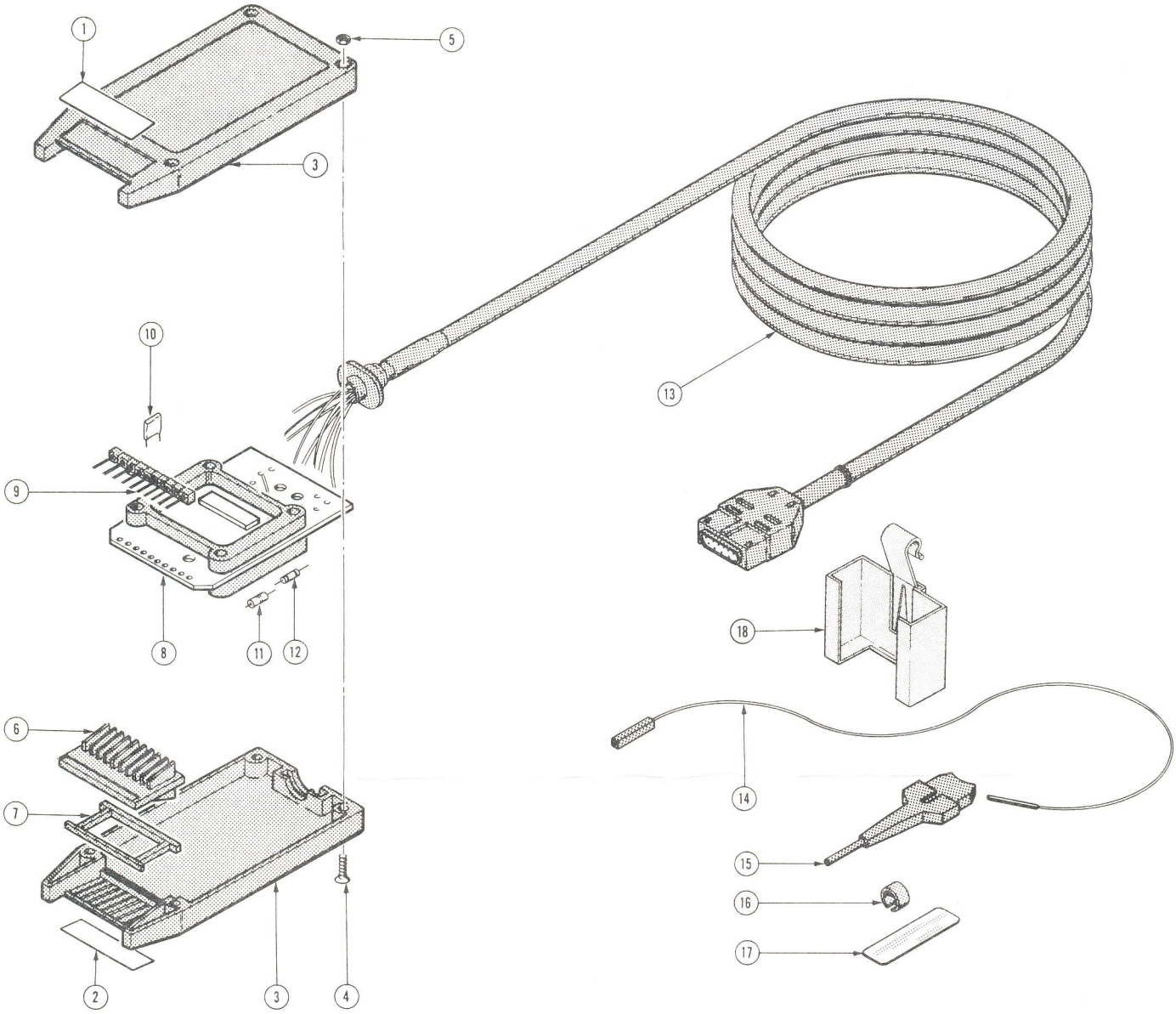

REPLACEABLE PARTS LIST

Fig. & Index No.	Tektronix Part No.	Serial/Model No. Eff	Dscont	Qty	1 2 3 4 5 Name & Description	Mfr Code	Mfr Part Number
	010-6451-01			1	PROBE,DATA:P6451,MULTILEAD,W/ACCESS	80009	010-6451-01
	----- -----[1]			1	. PROBE,DATA:P6451,MULTILEAD,PROBE ONLY		
	380-0463-02[2]			1	. . HOUSING,PROBE:W/IDENTIFICATION MARKERS	80009	380-0463-02
-1	----- -----[2]			1	. . . MARKER,IDENT:P6451		
-2	----- -----[2]			1	. . . MARKER,IDENT:DATA ACQUISITION PROBE		
-3	----- -----[2]			2	. . . HOUSING,PROBE:		
					(ATTACHING PARTS)		
-4	----- -----[2]			4	. . . SCR,MACHINE:4-40 X 0.625" 100 DEG,FLH,STL		
-5	----- -----[2]			4	. . . NUT,PLIAN,HEX:4-40 X 0.188 INCH,BRS		
					- - - * - - -		
-6	----- -----[2]			1	. . . SPACER,PROBE:		
-7	----- -----[3]			1	. . . SPACER,COVER:		

[1]Available under 010-6451-01 only.
[2]Available under 380-0463-02 only.

Fig. & Index No.	Tektronix Part No.	Serial/Model No. Eff	Dscont	Qty	1 2 3 4 5 Name & Description	Mfr Code	Mfr Part Number
-8	670-5025-00			3	. . CKT BOARD ASSY:DATA ACQUISITION W/HYBRID	80009	670-5025-00
-9	131-1811-00			1	. . . TERM SET,PIN:10,0.025 X 0.025 SQ PINS	22526	65595-110
-10	283-0220-00			6	. . . CAP.,FXD,CER DI:0.01UF,20%,50V(C4,5,6,10,	72982	8121N075W5R103M
	----- -----			-	. . . 11,14)		
-11	152-0075-00			1	. . . SEMICOND DEVICE:GE,25V,40MA,(CR4)	80009	152-0075-00
-12	315-0100-00			1	. . . RES.,FXD,CMPSN:10 OHM,5%,0.25W,(R7)	01121	CB1005
-13	175-1835-00			1	. . CA ASSY,SP,ELEC:PROBE,76.0 INCH LONG	80009	175-1835-00
					STANDARD ACCESSORIES		
-14	012-0655-02			1	LEAD SET,ELEC:INPUT,W/11,20 CM L,WIRES	80009	012-0655-02
-15	206-0222-00			10	TIP,PROBE:MICROCIRCUIT TEST	80009	206-0222-00
-16	334-1636-00			2	BAND,MARKER:ORANGE	80009	334-1636-00
	334-1636-01			2	BAND,MARKER:RED	80009	334-1636-01
	334-1636-05			2	BAND,MARKER:SILVER GRAY	80009	334-1636-05
	334-1636-06			2	BAND,MARKER:YELLOW	80009	334-1636-06
-17	334-2855-00			2	MARKER,IDENT:0-7	80009	334-2855-00
	334-2856-00			2	MARKER,IDENT:8-15	80009	334-2856-00
	016-0521-00			1	POUCH,ACCESSORY:	05006	OBD
	062-2372-00			1	DATA,SHEET:P6451	80009	062-2372-00
-18	352-0473-01			1	HOLDER,PROBE:W/HANGER	80009	352-0473-01

CROSS INDEX—MFR. CODE NUMBER TO MANUFACTURER

Mfr. Code	Manufacturer	Address	City, State, Zip
01121	ALLEN-BRADLEY COMPANY	1201 2ND STREET SOUTH	MILWAUKEE, WI 53204
05006	TWENTIETH CENTURY PLASTICS, INC.	415 E WASHINGTON BLVD.	LOS ANGELES, CA 90015
22526	BERG ELECTRONICS, INC.	YOUK EXPRESSWAY	NEW CUMBERLAND, PA 17070
72982	ERIE TECHNOLOGICAL PRODUCTS, INC.	644 W. 12TH ST.	ERIE, PA 16512
80009	TEKTRONIX, INC.	P. O. BOX 500	BEAVERTON, OR 97077