Scan by Zenith

Tektronix®

COMMITTED TO EXCELLENCE

**WARNING**

THE FOLLOWING SERVICING INSTRUCTIONS ARE FOR USE BY QUALIFIED PERSONNEL ONLY. TO AVOID PERSONAL INJURY, DO NOT PERFORM ANY SERVICING OTHER THAN CONTAINED IN OPERATING INSTRUCTIONS UNLESS YOU ARE QUALIFIED TO DO SO. REFER TO THE SERVICE SAFETY SUMMARY PRIOR TO PERFORMING ANY SERVICE.

**PLEASE CHECK FOR CHANGE INFORMATION AT THE REAR OF THIS MANUAL**

# 571
# CURVE TRACER

## Service

**Tektronix, Inc.**
**P. O. Box 500**
**Beaverton, Oregon 97077**
**U.S.A.**

**Serial Number** _____

Product Group 48
Tektronix Part No. 070-7722-00

First Printing Febr 1990

Scan by Zenith

Copyright © Tektronix Inc.1989. All rights reserved. No part of this publication may be reproduced, stored in a retrival system, or transmitted, in any form or by any means, elctronic, mechanical, photocopying, recording, or otherwise, without prior written permission of Tektronix Inc..
Specification and price changes are reserved.

Tektronix products are covered by patents, issued and pending.

TEKTRONIX INC., SCOPEMOBILE and are registered trademarks.

IBM, Centronics and EPSON are registrated trademarks.

**INSTRUMENT SERIAL NUMBERS**

Each instrument has a serial number on a panel insert tag, or stamped on the chassis. The first number or letter designates the country of manufacture. The last five digits of the serial number are assigned sequentially and are unique to each instrument.Those manufactured in the United States have six unique digits. The country of manufacture is identified as follows:

| | |
|---|---|
| B000000 | Tektronix, Inc. Beaverton Oregon, U.S.A. |
| G100000 | Tektronix Guernsey Ltd., Channel Islands |
| E200000 | Tektronix United Kingdom Ltd., London |
| J300000 | Sony / Tektronix, Japan |
| H700000 | Tektronix Holland N.V., Heerenveen, The Netherlands |

Scan by Zenith



# TABLE OF CONTENTS

Scan by Zenith



# LIST OF ILLUSTRATIONS



*NOTE*

*The following illustrations are located in the diagrams foldout section at the rear of this manual*



# LIST OF TABLES

Scan by Zenith



# Operators Safety Summary

*The general safety information in this part of the summary is for both operating and servicing personnel. Specific warnings and cautions will be found throughout the manual where they apply and do not appear in this summary.*

## TERMS

### In this Manual

CAUTION statements identify conditions or practices that could result in damage to the equipment or other property.

WARNING statements identify conditions or practices that could result in personal injury or loss of live.

### As Marked on Equipment

CAUTION indicates a personal injury hazard not immediately accessible as one reads the markings, or a hazard to property including the instrument itself.

DANGER indicates a personal injury hazard immediately as one reads the markings.

## SYMBOLS

### In This Manual

This symbol indicates where applicable cautionary or other information is to be found.

This symbol indicates static sensitive devices, that are subject to be dam aged by static electricity.

### As Marked on Equipment

DANGER - High voltage

Protective ground (earth) terminal.

ATTENTION - Refer to manual.

Scan by Zenith



Operators Safety Summary (cont.)

## POWER CONDITIONS

### Use the proper power Cord.

Use only the power cord and connector as specified for the instrument.

### Power source

Use the proper power source. Before switching on, make sure the instrument is set to the voltage of the power source.This product is intended to operate from a power source that will not apply more than 250 Volts RMS between the supply connectors or between either supply connector and ground. A protective ground connection by way of the grounding connector in the power cord is essential for safe operation.

### Grounding the product

This product is grounded through the grounding connector of the power cord. To avoid electrical shock, plug the power cord into a properly wired receptacle before making any connections to the product input or output terminals. A protective ground connection by way of the ground connection is essential for safe operation.

### Danger arising from loss of ground

Upon loss of the protective-ground connection, all accessible conductive parts ( including knobs and controls that may appear to be insulated ) can render an electrical shock.

### Use the proper fuse

To avoid fire hazard, use only the fuse specified for the instrument in the instrument part list. A replacement fuse must meet the type, voltage rating, and current rating specifications for the fuse that it replaces.

## GENERAL WARNINGS

### Do not operate in explosive atmospheres

To avoid explosions, do not operate this instrument in an atmosphere of explosive gasses.

### Do not remove covers or panels

To avoid personal injury, the instrument covers or panels should only be removed by qualified service personnel. Do not operate the instrument without covers and panels properly installed.

### Heating of the DUT

Testing at high power settings can cause the device under test (DUT) to get hot enough to cause injury. Avoid touching the DUT until cooled.

Scan by Zenith



# Service Safety Summary

FOR QUALIFIED SERVICE PERSONNEL ONLY

*Refer also to the Operators Safety Summary*

## DO NOT SERVICE ALONE

Do not perform internal service or adjustment of this product unless another person, capable of rendering first aid and resuscitation is present.

## USE CARE WHEN SERVICING WITH POWER ON

Dangerous voltages exist at several points in this instrument. To avoid personal injury , do not touch exposed connections and components while power is on.

Disconnect power before removing protective panels, soldering, or replacing components.

Scan by Zenith

# WARNING

THE FOLLOWING SERVICING INSTRUCTIONS ARE FOR USE BY QUALIFIED PERSONNEL ONLY. TO AVOID PERSONNEL INJURY, DO NOT PERFOM ANY SERVICING OTHER THAN THAT CONTAINED IN OPERATING INSTRUCTIONS UNLESS YOU ARE QUALIFIED TO DO SO. REFER TO OPERATORS SAFETY SUMMARY AND SERVICE SAFETY SUMMARY PRIOR TO PERFORMING ANY SERVICE.

Scan by Zenith



# THEORY OF OPERATION

## Introduction

This section contains an overall functional description of the 571.
Detailed schematics and component location drawings are located at the end of this instruction manual.

A simplified block diagram of the 571 is shown in Fig. 1-1.

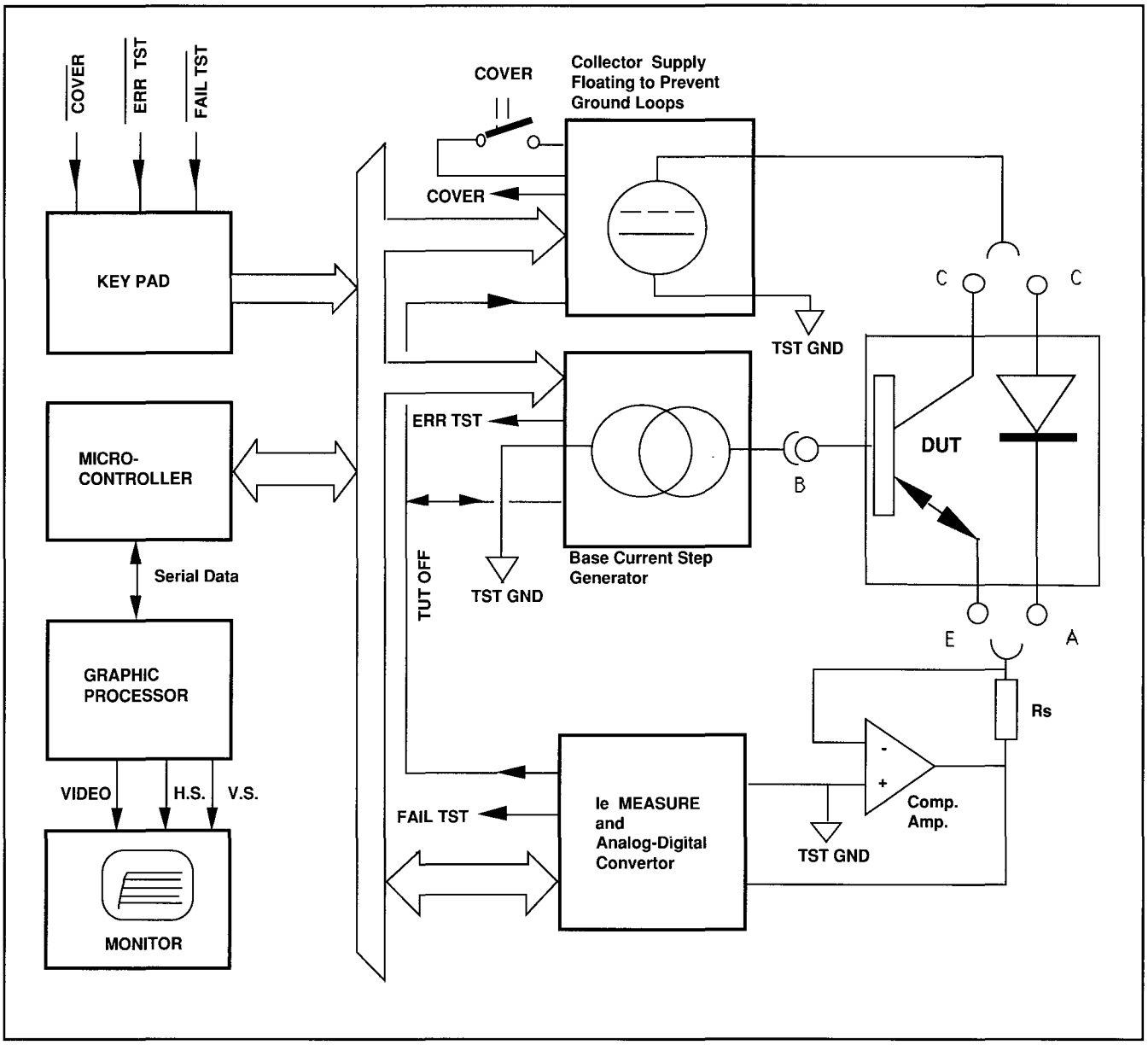


Fig. 1-1 Simplified Block Diagram 571

Scan by Zenith



## FUNCTIONAL DESCRIPTION

The 571 may be divided into 3 analog modules and 3 digital modules :

1. The collector voltage supply.
2. The base/gate drive.
3. The emitter current test circuit.
4. The keypad.
5. The Controller (8032)
6. The Graphic Processor (NS405)

The power supply, the emitter current test circuit, the base/gate drive circuit, the Controller (8032) and the Graphic Processor (NS405) are located on the main board.
The collector voltage supply and the power on switch are located on the Vce board.

The power supply is not mentioned in the block diagram. It will not be discussed in this manual, because it is a usual type power supply.

The 8032 controls the hole unit. It initializes the analog hardware, reads the keypad and the ADC in the test circuit, and passes display information on to the Graphic Processor (NS405).

The NS405 receives data from the Controller (8032). The data is processed by the NS405, and the video memory is filled with a bit image of the display. This bit image is read by the NS405 and passes the horizontal-sync., the vertical-sync. and the video signal on to the monitor.

The collector voltage supply is designed as a programmable power supply. It generates voltages between –100V and +100V on request of the 8032.
The collector voltage is used as a stimulus for the DUT (Device Under Test).

**WARNING**

*The major part of the Vc board circuitry (Collector voltage supply) is connected to the floating input circuitry. When a measurement is taken, dangerous voltages can be present.*

The base/gate drive circuit enables switching over from a current source circuit to a voltage source circuit as set by the Controller.
As a current source it is programmable from –200 mA to +200 mA.
As a voltage source it is programmable from –10V to +10V.
The base/gate output current or voltage is used as a stimulus for the DUT.

The emitter current test circuit measures the current through the DUT, converts it to digital information and passes it to the 8032.
The sensitivity of the emitter current test circuit is programmed by the 8032.

The keypad consists of 10 front panel keys, to operate the 571.
Three hardware status lines are monitored by the 8032 via this keypad.
The keypad together with the test sockets for the DUT are located on the front panel board.

Scan by Zenith



## ACQUISITION

In this paragraph a NPN transistor is used for the description of the acquisition operation.

The 8032 initializes the hardware as follows:

- the collector supply is set for the maximum voltage required and for the required load resistor in series with the DUT.
- the base/gate drive is set for the current required per step.
- the emitter current test circuit is set for the maximum current required.

The 8032 sends data words 0-250 to the DAC, which is located in the collector voltage supply circuit.The increment is 1.
During every voltage step of the collector voltage supply, the 8032 sends 10 data words or less, (depending on the number of base steps) to the DAC, located in the base drive circuit.
During each base step, the 8032 activates the ADC and reads the result.
The test result is used to calculate the collector current; Ic=Ie–Ib
Ie is measured and Ib is a known value inside the system.
Vce is calculated as Vce=Vcc–Rload x Ic.
Vcc is a known value inside the system (the voltage from the programmable collector supply).
Rload is a known value inside the system (the selected load resistor).
The resulting Vce and Ic are transmitted as vector information to the graphic processor (NS405).

A complete acquisition consists of 2500 samples or less. Between two samples the 8032 polls the keypad to check if the acquisition has not been interrupted by the <STOP> key or any of the hardware status lines.
A more detailed description of the acquisition can be found in the software description.

Just one test circuit is used for both the current (y-axis) and the voltage (x-axis). This is specific to the 571.
The emitter of the DUT is connected to the test resistor (Rs).

The current through the DUT and the test resistor results in a voltage across the test resistor. This voltage is measured in the ADC.
A power opamp. senses the junction of the DUT and the test resistor. The + input of this opamp is connected to a special ground connection.
The emitter of the DUT is now exactly at zero volts, independent of the current, and the voltage drop across the test resistor is compensated.

During acquisition the current loop through the test system is as follows:

Suppose we are testing a NPN transistor and start at the plus output of the collector supply :
The current flows through the DUT and the test resistor.
The power opamp sinks the current to the negative power supply.
The negative power supply sources the same current at ground level back to the collector supply.
Inside the collector supply this ground level is connected to TSTGND, which is used as a reference level for the power opamp. and the base drive.
This method results in a compensation of the voltage drop across wiring, etc.

Notes:
If the test current exceeds the maximum allowed current with more than 150%, the hardware FAILTST becomes active low.
If the base drive, which is a real current source, does not detect a junction to the emitter, it latches up and ERRTST becomes active low. Both signals activate the TUTOFF signal, which switches off all the hardware and bypassing the 8032.

If the protection cover is open and the collector voltage is over 20 V, the collector voltage is switched off and the COVER signal becomes active low. The controller is reacting when it polls the keypad.

When a diode is tested, the base drive is automatically switched-off and the number of steps is reduced to one in the software.

Scan by Zenith



## COLLECTOR VOLTAGE SUPPLY

See diagrams ◇1 and ◇2 .
The collector voltage supply is electrically floating. Negative output voltages are achieved by grounding the positive voltage output and using the negative part as the collector output.
Galvanic isolation is effected by opto couplers and relays.
The collector voltage supply has floating transformer windings for the 5 V ( for the logic circuitry) , the +15V and –15 V ( for the control circuitry), the + 55V and – 55 V, the +110 V and –110V (for the output voltage).
The collector supply consists of:

- House keeping supply ; D109-D114, U113-U115.
- Reference plus DAC; U107 ,U108.
- Current to voltage converter ; U111A.
- 1-2-5 selector ; U109.
- 3 stage amplifier;
  stage 1 : U111B,
  stage 2 : Q104 and Q101,
  stage 3 : Q107, Q102 and Q103.

A codeword to set the maximum output voltage is written by the 8032 into U101.

U101 activates U109 for the 1-2-5 selection and K101 or K102 for the gain factor of the amplifier.
A byte from 00H for 0 volt to FAH (250d) for maximum voltage is written into U102.
U102 activates the DAC, U108.
The DAC generates a current from 0 to 2 mA, depending on the data byte used.

U111A converts the current into a voltage from 0 to 4 V.
With U109 the following selections can be made :

- 0-0.4 V
- 0-0.8 V
- 0-1.6 V
- 0-4 V

The signal is called: UITG.
UITG is passed to the amplifier and with K101 and K102 the gain of the amplifier is set to get the output voltages required.

The output range of U111B is from –10V to + 10V. Therefore, the gain of the Q104 amplifier stage must be at least 5. R138, R133, R136, R155, R135 and R134 determine the gain at 7. Q101 provides the current for this stage.

The output stage of the supply consists of Q107, Q102 and Q103.

Various RC combinations are used for oscillation and aberration suppression in every possible combination of the output voltage and load.

Q108 sinks about 10 mA. That enables the supply to reach zero volt, even when the DUT sources some current into the supply.
At a maximum voltage of 50V and below, Q105 is off.
At a maximum voltage of 100V, U101 Q7 activates Q105 via U112 and U110C.
The 110V winding of the transformer is selected now.
U101 Q2 sets the polarity.
The signal POL activates K108 to connect + or – to ground.

At voltages of 20V and less, U101 Q2 is high. Via U112, K109 is activated so the voltage can reach the output connector.
At 50V or higher U101 Q2 is low and the protection cover must be in closed position to assert CLOSED C and to activate K109. K109B generates the signal COVER for detection in the 8032.
The 8032 will write a code word into U103 to select the required load resistor via U112 and K104-K107.

With power on reset, or TUTOFF active low, U104D resets U102 and U103. As a result of this the hardware will switch off the supply.
The supply has a limited hardware protection for overcurrent (just PTC R128). The load is switched on and off by the 8032. Most of the protection of the 571 has been implemented in the software.

Scan by Zenith



## EMITTER TEST CIRCUIT

See circuit diagram ③

The power opamp as discussed in the block diagram description consists of U203A and the power output stage Q202-Q205. R211-R218 is functioning as the test resistor.
The correct resistors are selected with K201-K204 to set the desired sensitivity in steps of 10.

The current through the DUT also flows trough the test resistor and causes a voltage drop across this resistor. This voltage is related to GND10 (TSTGND in the block diagram) and can vary from –4.5 V to +4.5 V for full scale.

U203B is a paraphase to single ended amplifier. It moves the voltage from GND10 level to GND4' level. At 2 A full scale, the voltage drop across the K204A contacts are compensated by switching the testpoint to R217 and R218 with K204B. U203B also changes the voltage from 4.5 V full scale to 4 V full scale.

U204A inverts the voltage at the resistor ladder network R223-R228 in a way that voltages V, V/2, V/4, –V/4, –V/2 and –V, are available.

Multiplexer U205 selects the 1-2-5 sequence and the polarity. The output range at pin 3 is 1 V at full scale.

U204B has a gain of 10, and delivers a signal from 0 to 10 V to the ADC. U208.

U206 provides a reference voltage of –10 V to U208. Via U206 the 8032 can read the result from the ADC after a conversion.

The 8032 writes a codeword into U201.
U201 controls K201 - K204 and controls the gain of the power opamp and controls U205 for the right polarity and 1-2-5 selection.

U202A and U202C form a window comparator that monitors the voltage across the test resistor.
U202D monitors the output voltage of U205.
If anything is going wrong (overcurrent) the outputs of the comparators go low and reset U201.

The overall gain of the power opamp is switched to its lowest gain position. Because U201 has been reset, the signal FAILTST goes low. This signal is polled by the 8032 via the front panel keypad. Also at power up reset, U201 is reset by U202B.

At initialisation the 8032 writes a '1' into U201 bit 7 making FAILTST high.
In case of an overcurrent, signal TUTOFF goes low too. This signal is used to switch-off the collector voltage supply and the base drive.
When TUTOFF is activated outside the emitter test circuit, D209 prevents resetting of U201.

Scan by Zenith



## BASE/GATE DRIVE CIRCUIT.

See diagram ◇4
The basedrive circuit consists of the following:

- reference U308, Q301 and Q302
- DAC U305
- current mirror U307A
- current mirror with power output stage U307B, Q305 and Q306.

The code word, written into U303, activates Q301 and Q302 for the 1-2-5 sequence in base steps.
Q301 and Q302 help to determine the reference current into the DAC.
Relays K301 - K304 are also controlled by the code word.
Relays K301 - K304 together with resistors R322 - R326 determine the ratio of the current mirror.
So, with the code word for U303 we can select 1 of the 15 basecurrents per step.

The code word written into U301 controls the DAC. Notice the inverter Q303 in the MSB (most significant bit) between U301 and U305.
When 00hex is written into U301, U305 receives 80hex. This results in: U305-2 sinks Iref * 127 / 255 mA and U305-4 sinks Iref * 128 / 255 mA. The current summation point is the junction of U305-4 and R316. The combination U305 and U307A sinks Iref * 1 / 255 mA.
R339 - R344 compensate for Iref * 1 / 255 so 00hex in U301 results in 0 mA to the second current mirror and 0 mA at the current output.

To have the combination U305 and U307A sink currents from 0 to Iref, the code words 00hex to 80hex are written into U301. This results in positive output currents at the basedrive output after the second current mirror.
To have the combination U305 and U307A source currents from 0 to Iref, the 2-complement of 0 to 127 (codewords 00 to 81 hex) are written into U301. This results in negative output currents at the output of the basedrive after the second current mirror.

When K306 is activated, the positive feedback of U307B disappears and the circuit is changed to a voltage source. The current from the first current mirror flows through R320, R321 and R327 and causes a voltage drop across these resistors.
U307B keeps pin 6 at zero, the output of the powerstage is the desired voltage. R320 is added for gain correction. The software selects R326 via K304 to have a Rout of 50 Ω.
In current mode and no low impedance load at the output, the output current cannot flow, and the output circuit latches up because of the positive feedback. This is monitored by window comparator U306C and U306B. The comparator generates a reset signal for U301 and U303. U301 sets the DAC to zero and U303 sets the output circuit to voltage source with the highest possible output resistance. ERRTST is set low and polled by the 8032.
Also "TUT OFF" is set active low to switch off the collector supply.
At initialization of the hardware, the 8032 writes a '1' to this position.

Scan by Zenith



## FRONT PANEL.

See diagram 5

The front panel consists of a digital part and an analog part.
The analog part consists mainly of the test socket array; J406, J407 and J408.
L401, L402 and R406 prevent oscillations of the DUT.
The digital part consists of the data buffers U402 and U403. These two buffers are passing the keypad and hardware status on to the 8032.

During the verification self-test, the 8032 writes a codeword into U401. U401 controls relays K401 - K403. These relays connect the base drive or the voltage collector supply with the emitter test circuit. The emitter test circuit is used to verify the performance of the base drive and the collector voltage supply.

## 8032 CONTROLLER CIRCUIT

See diagram 6

The controller circuit uses a 8032 Micro Controller, which is used according the design rules of the original manufacturer. Some global items and the exceptions will be discussed here.

U501 is the actual processor.
U505 is a power supply watchdog circuit that generates a reset pulse if Vcc drops too low and at power up.

If the power up self-test fails, the 8032 generates a new reset pulse, by way of port 1 bit 1 (U501 pin1) to pin 2 of U505.

The 8032 has a Code bank and a Data bank.
The Code bank is read only and can be accessed with the PSEN signal.
The Data bank is a read/write memory and can be accessed with the signal READ and WRITE (See Fig.1-2 for the complete memory map). U507 and U509 provide the address decoding.

U506 is a non volatile EEROM. If the EEROM is not accessible, the operational firmware adapts automatically. The verification self-test checks if the EEROM is present and displays a message. If the EEROM is not accessible, the 8032 reads FFhex at any location of the EEROM.
The EEROM is available for the operational firmware, if:

1. U506 present,
2. Strap W501 removed, and
3. The availability byte is written at the highest EEROM location.

FFhex will be read in any other situation.

After replacement of U506, a verification self-test is necessary, which will rewrite the availability byte into the EEROM.

For communication with the graphic processor, the 8032 has a build in UART. Signal names are TXD for data transmit and RXD for data receive.

Scan by Zenith



U503 contains the operational firmware and the test firmware. A selection switch NORM/TEST is located between J502 pin 9 and pin 10.

If the plug, on J502 pin 9 and pin 10, is removed, and also the jumper on J502 pin 1 and pin 2, the self-test is selected, and the data receive line from the graphic processor is interrupted. A diagnostic adapter 021-0459-00 can be connected to the 571 in order to communicate with the self test program.
For more details, see the Trouble Shoot paragraph in section 3.

## GRAPHIC PROCESSOR.

See diagram 7
The heart of the CRT processor is the National NS405. This is a 8048 like processor with a CRT controller built in.
The NS405 features 2 bus systems. SB0 - SB15 for the video ram bank and RE0- RE12 for the program code bank.
The video RAM bank contains a bit image of the CRT display including the video attributes. The video ram locations, that are not used for the bit image, are available to be used as a scratch pad.
The CRT controller part of NS405 continuously interrupts the 8048 part, reads the video memory and sends the video information to the monitor via U608 and U609.
With U608 and U609 the polarity of the output signals are adapted to the video monitor.

Port RE[0..7] of the NS405 has 3 multiplexed functions:

1. I/O port during leading edge of the ALE pulse.
2. Address low during high level of the ALE pulse.
3. Data bus during the rest of the memory cycle.

U606 is a level triggered D-latch and catches the address low for a memory operation. U625 is level triggered and catches the byte on the I/O port of the NS405. The NS405 writes a data bit at D1; a '0' or '1' as clock signal at D2 and a strobe pulse at D3 of U625. So, the NS405 is able to shift a complete byte into shift register U627. After the complete byte has entered U627, the NS405 activates the strobe pulse, so the byte and strobe pulse are available at the printer output connector.
By way of U626, U605 polls the incoming signal from J625. The NS405 follows the Centronics® protocol and sends data that is EPSON® and IBM® compatible to the attached printer.

Scan by Zenith



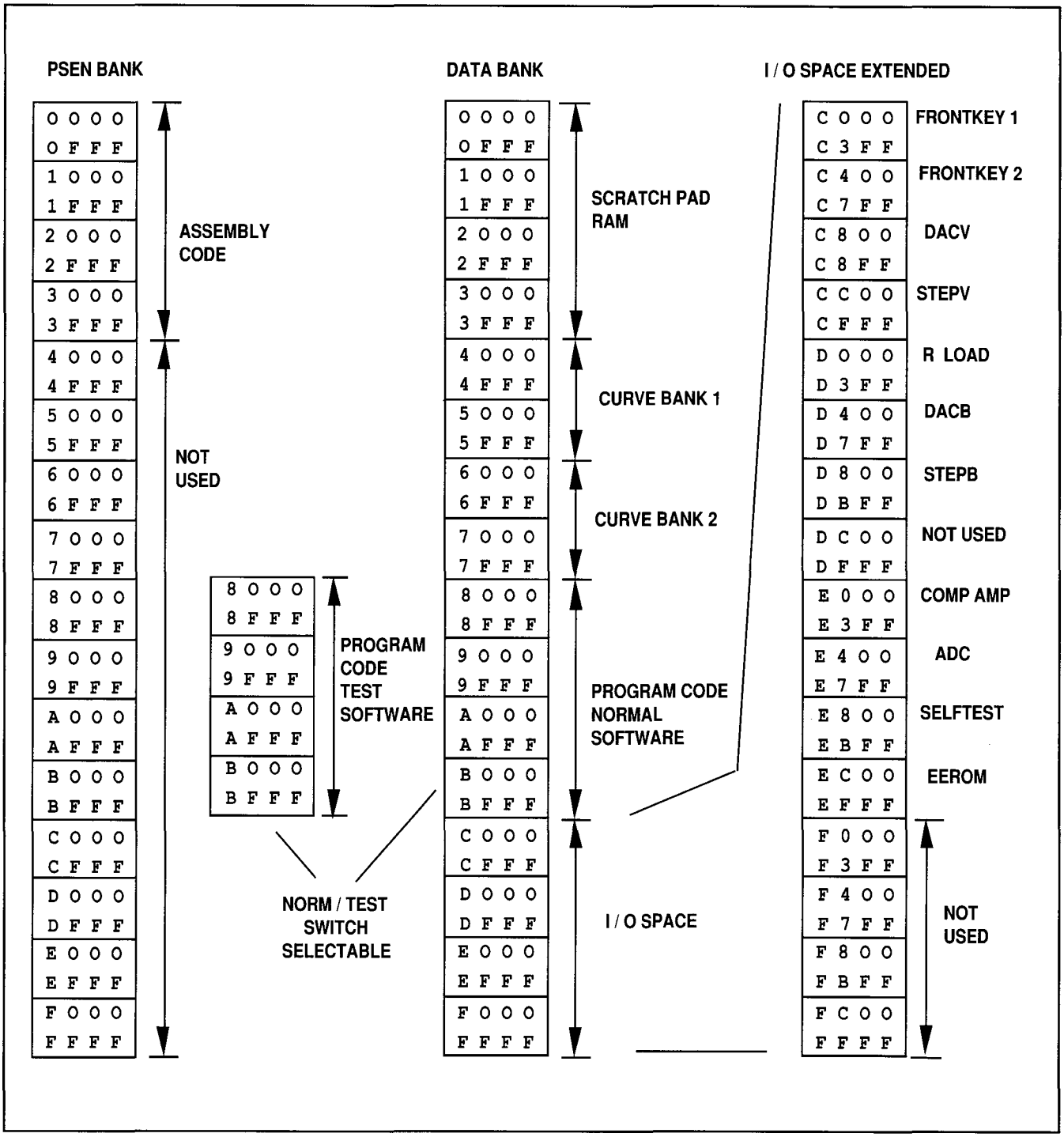


Fig. 1-2 Memory Map 8032

Scan by Zenith



# SOFTWARE OVERVIEW

In this section of the manual the software of the 571is described. The 8032 controller and the NS405 graphic processor have their own software, stored in 3 EPROM's. U502 and U503 for the 8032 controller and U607 for the NS405 graphic processor.

## Graphic Processor

The software of the graphic processor NS405 is written in assembly language. The software has mainly three tasks:

1. Control the display.
2. Drive a printer.
3. Control the communication between the graphic processor and the 8032 controller.

Control of the display is the first task and the biggest part of the software. Only the initialisation part will be described. At power up the video parameters and some other functions are initialized.
To synchronize the two processors, the 8032 is performing some initialisation and the graphic processor waits for a "?" response from the 8032. The 8032 on his turn, waits for response from the graphic processor as a sign that the graphic processor has finished its initialisation. At this point the graphic processor performs a video ram test. A 055hex and 0AAhex pattern is written and read.
If the video ram is allright, a <xon> character is send to the 8032.
If an error occurs, the graphic processor sends a <xoff> to the 8032 and displays "reset" in the lower left corner of the display. The 8032 reacts to it by pulling down P1.0. The power watchdog circuit U505 resets the system as if it is a power up situation.
This process is repeated until the video processor finds no error in video ram and the 8032 gets a <xon> character.

The second task of the software is to make a screen copy on a printer. When the copy key of the 571 is pressed, the graphic processor sends a <xoff> to the 8032 which will be locked now.

The graphic processor checks if a printer is connected *and* ready by means of the "busy" line at J625 (U626 pin 4). The remaining sense lines are connected but not actually checked.
If a printer is connected *and* on line the message "Printing..." appears at the bottom line. Screen pixels are collected and transferred to the printer (printer in graphic mode with the <esc> L command).
If the printer is switched off line or an error occurs, the graphic processor will wait until it is corrected.
If no printer is connected or the printer is not on line when the 571 copy key is pressed, the message "Printer not ready!" appears for two seconds at the bottom line. When printing is ready or the two second message disappears, the graphic processor sends a <xon> character to the 8032 so the processor can proceed.

The third task of the graphic processor is to collect characters from the 8032. To prevent loosing characters a <xon>/<xoff> handshake has been implemented between the two processors. The graphic processor will use an input buffer of 16 characters to raise efficiency of the communication. When the buffer is loaded with 12 characters, a <xoff> character is send to the 8032. The buffer is emptied and when four characters are left, a <xoff> character will be send to the 8032.

## 8032 Controller

The operational software of the 8032 controller is modular in design (see figure 2-1).
Each module represents a function and the connecting lines represent the main program to link the modules.
The EPROM U503 includes two memory banks, one containing the operational software and one containing the test software. Bank selection is executed by a slide switch at the rear of the instrument. Switch position NORMAL selects the operational software, position TEST selects the test software. The test software will be discussed in the next chapter.

Scan by Zenith



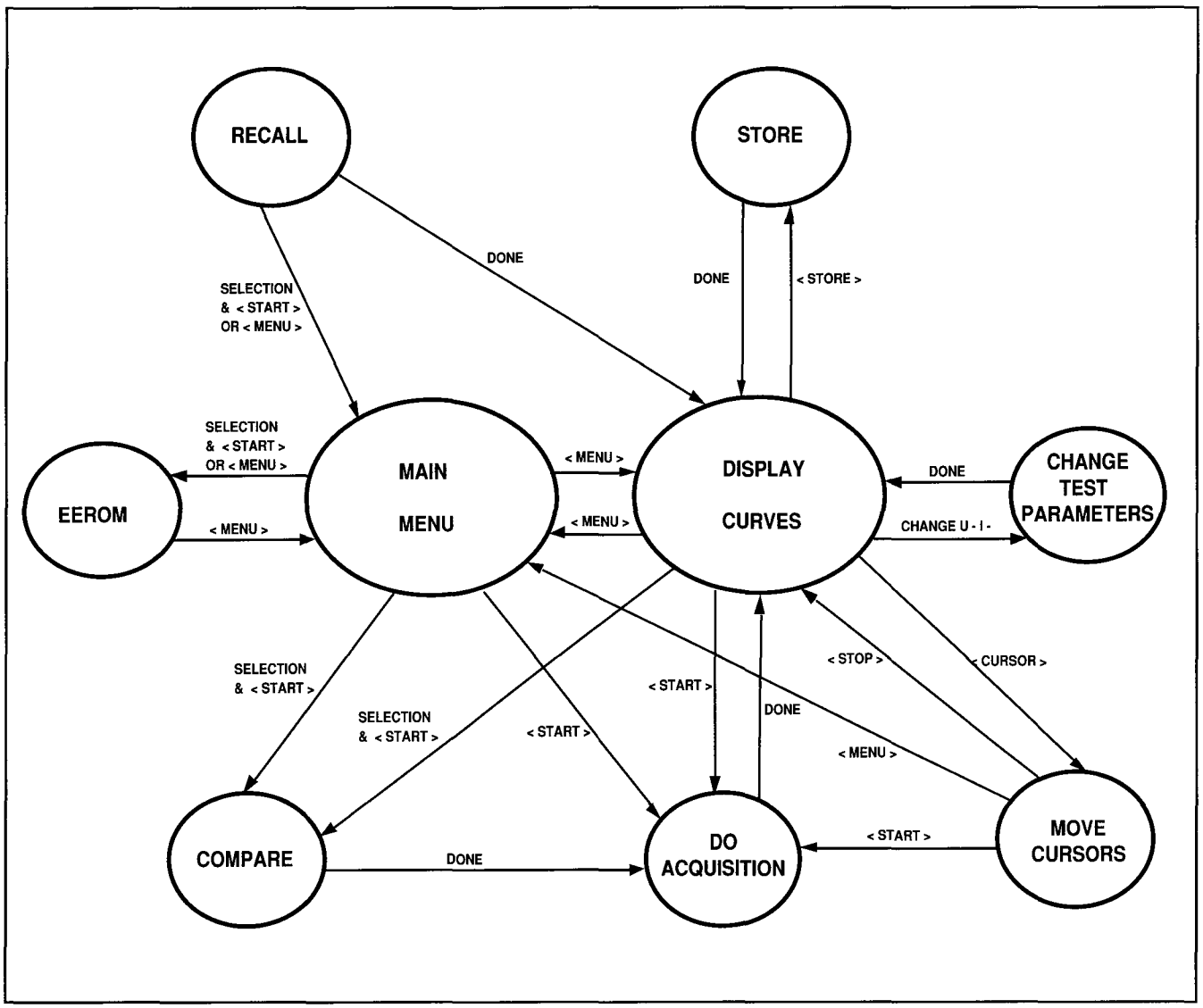


Fig. 2-1 Software Overview

Scan by Zenith



## DESCRIPTION OF THE MODULES IN FIG. 2-1

### Main Menu

presents the menu with all the selection items to perform a test on a DUT.

### Display Curves

presents a graticule with all the items from the menu. After an acquisition, the graticule is filled with the obtained curves.

### EEROM

is the utility to read from or write into the non volatile memory U506 a complete test set up.
If U506 is defective, retrieve from EEROM results in non-usable parameters, or the menu line for the EEROM function disappears.

### Change Test Parameters

allows changing the current scale and the voltage scale without entering the main menu. To the user it seems like the 571 stays inside the Display Curves mode.

### Store

writes a set of curves, with the test parameters, into the save memory, part of U504, and makes the Recall function part of the menu.

### Recall

retrieves a set of curves from the save memory, part of U504, and displays it highlighted on the screen. The set of curves and all the test parameters concerned, are retrieved and valid. The first subsequent acquisition will be performed without a screen erase, so two sets of curves are displayed.

### Compare

checks and sets some flags for program control. Reference curves are automatically written into the save bank or retrieved from the save bank. See the operators manual.

### Move Cursors

After an acquisition with enough samples (more than 5 voltage steps) a cursor can be moved along the curves of the latest set of curves.To the left of the graticule the current and voltage value of the cursor position are displayed.

### Do Acquisition

This module executes the actual acquisition. It controls the hardware of the 571, takes samples and sends the test results as vector data to the graphic processor.
This module will be discussed more detailed in the next paragraph because it is the only module that controls the analog hardware.

### Do Acquisition (detailed description)

The operating software starts checking the selected parameters on a possible conflicting setting (see operators manual page 9-2).
If necessary, parameters are adapted and the code words are written to the appropriate registers in the hardware. The parameters in fact are indexes. With those indexes the code words and real values are retrieved from tables in the code memory bank.
After initialization of the hardware, the actual acquisition starts. An acquisition consists of 250 voltage steps or less. Data words 0 - 250 (00hex - FAhex) are written to the DAC in the collector voltage supply.
Between every voltage steps, the collector voltage supply is switched off by writing a 0 to the DAC. Every voltage step consists of 10 base/gate steps or less.The 8032 writes a code word 0 - 100 to the DAC in the base drive for a base/gate step and triggers the ADC.

Scan by Zenith



While the ADC is executing the analog to digital conversion, the 8032 checks the hardware status lines. If an error occurs, error flags are set and the acquisition is terminated.
If no error occurs, the 8032 reads the ADC and switches off the base drive. Then the 8032 sends a trigger and reads the ADC again.
Data obtained when the base drive was on, is used to calculate the current through the DUT and the voltage on the DUT. The results are send to the graphic processor.
Data obtained while the base drive was switched off is used for error detection and hardware protection.
If the current through the DUT is too high while the base drive is off, the DUT may be defective and the number of steps are reduced to prevent overdissipation.
If the current is too high while the base drive is off and the Ri of the DUT is below 0.25 Ω, the overcurrent flag is set and the acquisition terminated. In this way the system anticipates on what is going to happen and an overcurrent is detected before the destructive current really flows.

Between voltage steps, the 8032 checks if <STOP> is pressed or error flags are set. If so, the acquisition is terminated. If not, the highest base step is checked. If the current through the DUT during the highest step is above the current scale or if the dissipation of the DUT was above the selected value, the number of steps is decremented.
After the acquisition is terminated or finished, the hardware is switched off, the error flags are read and the appropriate message is displayed on the screen.
Between voltage steps, the collector power supply is switched off and between base steps the base drive is switched off to reduce the real time dissipation of the DUT and the 571. For the same reason some dynamic delay loops are build in between samples at high current levels.

Scan by Zenith



# CALIBRATION / TROUBLESHOOTING

## GENERAL

### Software Description

The test software has three modules:

1. An internal calibration program.
2. An external calibration program, for troubleshoot purposes.
3. A troubleshoot program.

Items 2 and 3 require a terminal , for instance a VT100 from DIGITAL ®, and a diagnostic adapter 012-0459-00 from TEKTRONIX®.
Terminal must be set at 9600 baud, 8 bits, no parity and 1 stop bit.

### Access to the Internal Calibration Program

Set the slide switch at the rear to TEST and reset the 571.
Use the 571 during calibration as indicated in the calibration procedure.
For detailed information see section Calibration Procedure".

### Access to the External Calibration Program

Switch off the 571.
Remove the top cover.
Remove the connector from J501 pin 9-10 and the strap from J501 pin 1-2.
Connect the diagnostic adapter to J501 and to the terminal.
Switch on the terminal and the 571.
The 571 prompts the terminal with '?'.
Type 'g' or 'G'.
The external calibration program starts.

The external calibration and the internal calibration have the same procedure, except for the following:

- The video checks are skipped.
- The front panel key check is skipped.

During any test of the verification part, the space bar on the terminal may be pressed. The 571 responds with '>>' , indicating that the next test will be logged and the verification is terminated.
See also section External Calibration Program"

### Access to the Trouble Shooting Program

See Access to the External Calibration Program.
When the 571 prompts the terminal with a "?", type a "t" or a "T".
The trouble shoot program starts. For a description see section Trouble Shoot Program.

Scan by Zenith



## CALIBRATION

### Introduction

The calibration procedure can be used to restore the 571 to the original performance requirements. This procedure needs not to be performed unless the Performance Check Procedure cannot be completed satisfactorily or the instrument fails to meet the Performance Requirements of the electrical characteristics as listed in section 1 of the 571 operators manual.

### Calibration Interval

Calibration should be performed if the performance check procedure shows that the 571 is out of specification.
Calibration is also recommended following instrument repair or modification. If any part of the calibration procedures in this section cannot be performed properly, refer to the trouble shooting information.

### Environmental Conditions

Calibration should be performed under laboratory conditions having an ambient temperature of 22-24 $^0$C and a relative humidity of less then 70%.
The 571 must be turned on and allowed to warm up for at least 30 minutes before beginning the performance checks. After exposure to or storage in a high humidity (condensing) environment one hour warm up time is required.

### Equipment required

For calibration:

- Digital multimeter type DM504A from Tektronix ®.

For troubleshooting:

- Terminal type VT100 from Digital ®.
- Oscilloscope type 2225 from Tektronix ®
- Diagnostic adapter 012-0459-00 from Tektronix ®

The test and troubleshoot equipment is suggested to perform the 571 calibration.
Equivalent equipment may be used if the accuracy is at least as good as the instruments listed.

For adjustment locations see figure 3-1.

Scan by Zenith



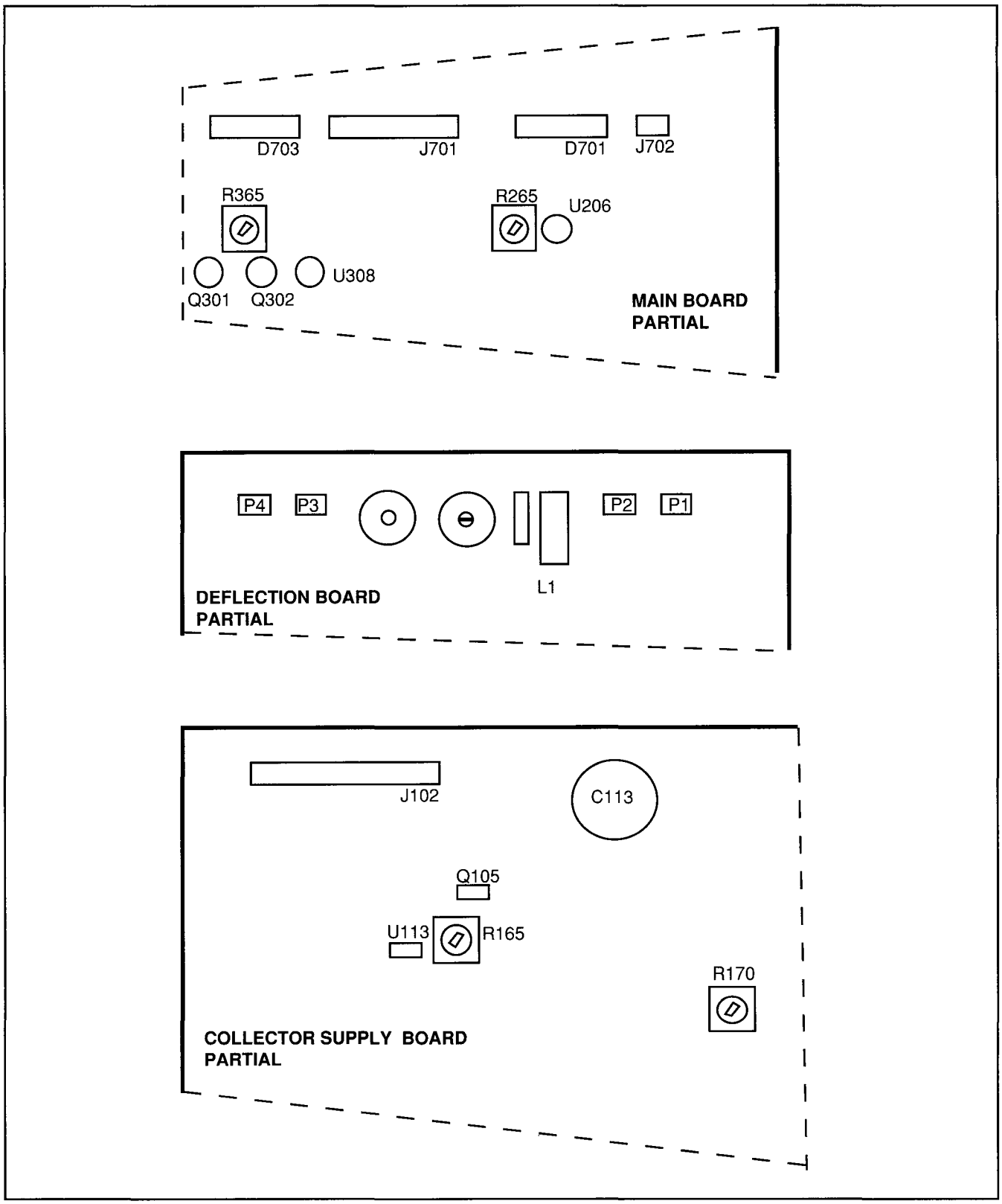


**Fig. 3-1 Adjustment Locations**

Scan by Zenith



## CALIBRATION PROCEDURE

Set the slide switch at the rear panel to TEST and remove the top cover.
Switch on the 571.
The calibration procedure will proceed in a sequential way.

### Deflection and Video

Judge the deflection pattern.
If necessary readjust the horizontal gain with L1 on the deflection board, and the horizontal position with P1.
If necessary readjust the vertical gain with P2 on the deflection board.
Check the deflection distortion and if necessary readjust the magnets on the deflection unit.
Press any key.
Inspect the text with the video attributes.
Adjust P4 so the back ground raster just vanishes. Rotate R612 at the rear panel through its range and check that the back ground raster does not appear. If necessary readjust P4.
Optimize P3 for best focus.

### Front Panel Key Pad

Press any key.
Close the protection cover and check that the word 'COVER' on the screen flips over to inverse video. If necessary adjust the actuator screw on the protection cover. If the micro switch is released, the text must turn to highlighted inverse video.
Press all keys on the front panel, one at the time, and check that the appropriate text flips over to inverse video.

### Analog Hardware

Check the EEROM report: 'EEROM installed'.

### Collector Voltage Supply

Connect the DM504A low input to jacket 'E' and the voltage input to jacket 'C' on the 571 front panel. The DM504A must be in the DC voltage mode.
Adjust R165 for a reading of 10.000 V as close as possible. R170 = OFFSET see page 3-10

### Base Drive

Press any key.
Move the testlead from the 'C' jacket to the 'B' jacket on the 571 front panel. Move the same testlead from the voltage input to the mA input on the DM504A. Mode to mA DC.
Adjust R365 for a reading of 10.000 mA as close as possible.

### Compensation Amplifier and ADC

Press <START>.
Disconnect the DM504A from the 571.
Rotate R265 slightly counter clockwise for a reading on the 571 screen of 199.
Rotate R265 slowly clockwise. Stop rotation as soon as a stable reading of 200 is reached.

### Verification Test

Press <START>. The 571 tests itself completely, using the three previous adjustments as a reference. For a list of tests that are executed, see appendix A ~~at the end of this manual~~. Switch off the 571.
Set the slide switch on the rear back to NORMAL.
Reinstall the top cover.

### Printer Interface

Connect an Epson or IBM (compatible) printer to the printer connector at the rear. Use the Centronics cable (Tektronix partnumber 012-0555-00).
Switch on the 571.
Install an NPN transistor in the appropriate socket and press <START>. A set of curves appears on the display.
After the acquisition press <COPY>. The printer should produce a hardcopy of the screen.

Scan by Zenith



# VERIFICATION LIST

The video part is checked for deflection, intensity and focus.
Next, the front panel switches and cover switch are checked.

**Test #0 is performed to adjust or inspect Uce, base drive and ADC accuracy.**

- The controller activates the collector voltage supply to generate 10V. The operator should verify this voltage with a traceable DMM.
- The controller activates the basedrive to generate 10mA. The operator should verify this current with a traceable DMM.
- The controller shorts the basedrive to the emitter circuit by K401. The basedrive is set to generate 8mA, and the ADC is set to a sensitivity of 10mA max. The controller continuously reads the ADC and prints the result.

**Test #1. ADC versus Uce R load is 0 Ω**

The controller sets the 571 according to the list below. K402 is activated so R401 is switched as reference resistor Rref.
The collector voltage supply is connected to the emitter circuit by R401. The current flows from the supply to the emitter circuit and is measured there.
The controller reads the ADC and checks the result to be within limits.

| | | |
|---|---|---|
| 1.5.250 | Uce range | = 10 V max |
| | ADC range | = 10 mA max |
| | DACV | = 250 |
| | Rref | = 1 KΩ +/- 1% |
| 1.5.125a | Uce range | = 10 V max |
| | ADC range | = 10 mA max |
| | DACV | = 125 |
| | Rref | = 1 KΩ +/- 1% |
| 1.5.125b | Uce range | = 10 V max |
| | ADC range | = 5 mA max |
| | DACV | = 125 |
| | Rref | = 1 KΩ +/- 1% |
| 1.5.50a | Uce range | = 10 V max |
| | ADC range | = 5 mA max |
| | DACV | = 50 |
| | Rref | = 1 KΩ +/- 1% |
| 1.5.50b | Uce range | = 10 V max |
| | ADC range | = 2 mA max |
| | DACV | = 50 |
| | Rref | = 1 KΩ +/- 1% |

**Test #2 ADC middle low ranges R load is 0 Ω**

| | | |
|---|---|---|
| 2.4 | Uce range | = 500 mV max |
| | ADC range | = 500 µA max |
| | DACV | = 0 .. 250 |
| | Rref | = 1 KΩ +/- 1% |
| 2.5 | Uce range | = 1 V max |
| | ADC range | = 1 mA max |
| | DACV | = 0 .. 250 |
| | Rref | = 1 KΩ +/- 1% |
| 2.6 | Uce range | = 2 V max |
| | ADC range | = 2 mA max |
| | DACV | = 0 .. 250 |
| | Rref | = 1 KΩ +/- 1% |
| 2.7 | Uce range | = 5 V max |
| | ADC range | = 5 mA max |
| | DACV | = 0 .. 250 |
| | Rref | = 1 KΩ +/- 1% |
| 2.8 | Uce range | = 10 V max |
| | ADC range | = 10 mA max |
| | DACV | = 0 .. 250 |
| | Rref | = 1 KΩ +/-1% |

Scan by Zenith



**Test #3 load resistors 100 Ω, 1 KΩ, 10 KΩ.**
**Uce shorted to ADC.**

The controller shorts the collector voltage supply to the emitter circuit by K403 and sets the 571 according to the list below. The controller reads the ADC and checks the result to be within limits.

| | | |
|---|---|---|
| 3.3 | Uce range | = 1 V max |
| | ADC range | = 10 mA max |
| | DACV | = 0 .. 200 |
| | Rload | = 100 Ω |
| 3.2 | Uce range | = 10 V max |
| | ADC range | = 10 mA max |
| | DACV | = 0 .. 200 |
| | Rload | = 1000 Ω |
| 3.1 | Uce range | = 10 V max |
| | ADC range | = 1 mA max |
| | DACV | = 0 .. 200 |
| | Rload | = 10 000 Ω |

**Test #4 Collector supply highest ranges.**

Test #4, #5 and #6 run equal to test #2.
The difference is that the collector voltage supply is shorted to the emitter circuit by K403. Inside the collector supply, one of the load resistors is selected as reference resistor.
Test #4.0 checks SCR Q105 to switch on correctly.

| | | |
|---|---|---|
| 4.0 | Uce range | = 100 V max |
| | ADC range | = 10 mA max |
| | DACV | = 250 |
| | Rref | = 10KΩ +/- 1% |
| 4.6 | Uce range | = 20 V max |
| | ADC range | = 2 mA max |
| | DACV | = 0 .. 225 |
| | Rref | =10 KΩ +/- 1% |
| 4.7 | Uce range | = 50 V max |
| | ADC range | = 5 mA max |
| | DACV | = 0 .. 225 |
| | Rref | =10 KΩ +/- 1% |
| 4.8 | Uce range | = 100 V max |
| | ADC range | = 10 mA max |
| | DACV | = 0 .. 225 |
| | Rref | =10 KΩ +/- 1% |

**Test #5. ADC lowest ranges.**

| | | |
|---|---|---|
| 5.1 | Uce range | = 500 mV max |
| | ADC range | = 50 µA max |
| | DACV | = 0 .. 250 |
| | Rref | =10 KΩ +/- 1% |
| 5.2 | Uce range | = 1 V max |
| | ADC range | = 100 µA max |
| | DACV | = 0 .. 250 |
| | Rref | =10 KΩ +/- 1% |
| 5.3 | Uce range | = 2 V max |
| | ADC range | = 200 µA max |
| | DACV | = 0 .. 250 |
| | Rref | =10 KΩ +/- 1% |

**Test #6. ADC middle high ranges.**

| | | |
|---|---|---|
| 6.9 | Uce range | = 2 V max |
| | ADC range | = 20 mA max |
| | DACV | = 0 .. 250 |
| | Rref | =100 Ω +/- 1% |
| 6.10 | Uce range | = 5 V max |
| | ADC range | = 50 mA max |
| | DACV | = 0 .. 250 |
| | Rref | =100 Ω +/- 1% |
| 6.11 | Uce range | = 10 V max |
| | ADC range | = 100 mA max |
| | DACV | = 0 .. 250 |
| | Rref | = 100 Ω +/- 1% |
| 6.12 | Uce range | = 20 V max |
| | ADC range | = 200 mA max |
| | DACV | = 0 .. 250 |
| | Rref | = 100 Ω +/- 1% |

Scan by Zenith



**Test #7. load resistor 10 Ω. Uce shorted to ADC.**

This test runs equal to test #3.

| | | |
|---|---|---|
| 7.4 | Uce range | = 1 V max |
| | ADC range | = 100 mA max |
| | DACV | = 0 .. 200 |
| | Rload | = 10 Ω |

**Test #8. ADC highest ranges.**

This test runs equal to test #4.

| | | |
|---|---|---|
| 8.13 | Uce range | = 5 V max |
| | ADC range | = 500 mA max |
| | DACV | = 0 .. 75 |
| | Rref | = 10 Ω +/-1% |
| 8.14 | Uce range | = 10 V max |
| | ADC range | = 1A max |
| | DACV | = 0 .. 75 |
| | Rref | = 10 Ω +/-1% |
| 8.15 | Uce range | = 20 V max |
| | ADC range | = 2A max |
| | DACV | = 0 .. 75 |
| | Rref | = 10 Ω +/-1% |

**Test #9. Base drive circuit.**
**Base drive connected directly to ADC.**

The basedrive is shorted to the emitter circuit.
The basedrive and the emitter circuit plus ADC are set according to the list below. The current flows from the basedrive into the emitter circuit. The controller reads the ADC and checks the result to be within limits.

| | | |
|---|---|---|
| 9.1 | Base drive | = 5 µA max |
| | ADC range | = 50 µA max |
| | DACB | = 0 .. 100 & 0 ..-100 |
| 9.2 | Base drive | = 10 µA max |
| | ADC range | = 50 µA max |
| | DACB | = 0 .. 100 & 0 ..-100 |
| 9.3 | Base drive | = 20 µA max |
| | ADC range | = 50 µA max |
| | DACB | = 0 .. 100 & 0 ..-100 |
| 9.4 | Base drive | = 50 µA max |
| | ADC range | = 50 µA max |
| | DACB | = 0 .. 100 & 0 ..-100 |
| 9.5 | Base drive | = 100 µA max |
| | ADC range | = 100 µA max |
| | DACB | = 0 ..100 & 0 ..-100 |
| 9.6 | Base drive | = 200 µA max |
| | ADC range | = 200 µA max |
| | DACB | = 0 ..100 & 0 ..-100 |
| 9.7 | Base drive | = 500 µA max |
| | ADC range | = 500 µA max |
| | DACB | = 0 ..100 & 0 ..-100 |
| 9.8 | Base drive | = 1 mA max |
| | ADC range | = 1 mA max |
| | DACB | = 0 ..100 & 0 ..-100 |
| 9.9 | Base drive | = 2 mA max |
| | ADC range | = 2 mA max |
| | DACB | = 0 ..100 & 0 ..-100 |
| 9.10 | Base drive | = 5 mA max |
| | ADC range | = 5 mA max |
| | DACB | = 0 ..100 & 0 ..-100 |
| 9.11 | Base drive | = 10 mA max |
| | ADC range | = 10 mA max |
| | DACB | = 0 ..100 & 0 ..-100 |
| 9.12 | Base drive | = 20 mA max |
| | ADC range | = 20 mA max |
| | DACB | = 0 ..100 & 0 ..-100 |
| 9.13 | Base drive | = 50 mA max |
| | ADC range | = 50 mA max |
| | DACB | = 0 ..100 & 0 ..-100 |
| 9.14 | Base drive | = 100 mA max |
| | ADC range | = 100 mA max |
| | DACB | = 0 ..100 & 0 ..-100 |
| 9.15 | Base drive | = 200 mA max |
| | ADC range | = 200 mA max |
| | DACB | = 0 ..100 & 0 ..-100 |

Scan by Zenith



**Test #10. Gate drive voltages.**

The basedrive is initiated to a gatedrive (voltage source) and shorted to the emitter circuit. R324 is selected as reference resistor Rref. The gatedrive and emitter circuit plus ADC are set according to the list below. The current flows into the emitter circuit. The controller reads the ADC and checks the result to be within limits.

| | | |
|---|---|---|
| 10.2 | Gate drive | = 2.5 V max |
| | ADC range | = 500 µA max |
| | DACB | = 0 ..100 & 0 ..-100 |
| | Rref | = 5 KΩ +/-1% |
| 10.3 | Gate drive | = 5 V max |
| | ADC range | = 1 mA max |
| | DACB | = 0 ..100 & 0 ..-100 |
| | Rref | = 5 KΩ +/-1% |
| 10.4 | Gate drive | = 10 V max |
| | ADC range | = 2 mA max |
| | DACB | = 0 ..100 & 0 ..-100 |
| | Rref | = 5 KΩ +/-1% |

**Test #11. Over current, open base-emitter, cover**

11.1.1 Write '0' to STEPB address D800.7
Write '0' to ADC address E000.7
Write '0' to STEPV address CC00.0
Read FRONTK1 address C000

Check that result is F1 hex.

11.1.2 Write '1' to STEPB address D800.7
Write '1' to ADC address E000.7
Write '1' to STEPV address CC00.0
Read FRONTK1 address C000

Check that result is FF hex.

D800.7 is connected to C000.2
E000.7 is connected to C000.1
CC00.0 is connected to C000.3

| | | |
|---|---|---|
| 11.2.1 | Uce range | = 5 V max |
| | ADC range | = 2 mA max |
| | Rload | = 1 KΩ |
| | DACV | = 100 ..156 |

Read FRONTK1 address C000.1 and check over current to show up, and base drive to switch off.

11.2.2 Check Uce to switch off.

11.2.3 Check if over current showed up within specs.

| | | |
|---|---|---|
| 11.3.1 | Uce range | = 5 V max |
| | ADC range | = 5 mA max; connected to Uce |
| | DACV | = 200 |
| | Rload | = 10 KΩ |
| | Base drive | = 5 µA max; not connected to anything |
| | DACB | = 20 |

Read FRONTK1 address C000.2 and check ERRTST (open base) to show up and overcurrent did not.

11.3.2 Read ADC and check Uce to switch off.

**END OF VERIFICATION TEST**

Scan by Zenith



## EXTERNAL CALIBRATION PROGRAM

Remove the 571 top cover.

**CAUTION**

*Switch off the 571 before you connect the adapter to J502 else the adapter and the 8032 controller may be destroyed!*

Remove the connector from J502, (the bank selection), and remove the jumper from J502. Removing J502 interrupts the data receive line from the graphic processor.
J502 is available now to be connected to a terminal or personal computer with terminal emulation by means of a diagnostic adapter (021-0459-00).
Terminal settings: 9600 baud, 8 bits, no parity and 1 stop bit.

Switch on the 571 and it will prompt with the question mark. Report as a remote operator with 'g'. Upper or lower case makes no difference.
The 'g' causes the verification self test to start.

The video part inside the 571 will be switched off and the video tests are skipped.
The verification test starts with the EEROM report. All messages are displayed on the terminal screen.
If you are prompted to press <START> on the 571 or <space bar> on the terminal, <START> will cause the normal test sequence.
If <space bar> is pressed, the next test will be reported completely to the terminal, and no error or pass decision is made. After the reported test is finished, the verification test is terminated.

During any test of the verification procedure the space bar may be pressed. The 571 will respond with '>>' as a token that the next test will be reported.

Scan by Zenith



## TROUBLE SHOOTING PROGRAM

### Introduction

With the trouble shooting program the 571 can be controlled completely, any hardware installation and the according measurements can be made, either with external test instruments or with the internal ADC.

**CAUTION**

*Take care at high currents and voltages. The software protection discussed in the operational software chapter is not active, and the hardware protection in this situation is not 100%.*

### Acces to the Trouble Shooting Program

Remove the 571 top cover.

**CAUTION**

*Switch off the 571 before you connect the adapter to J502 else the adapter and the 8032 controller may be destroyed!*

Remove the connector from J502 (the bank selection) and remove the jumper from J502. Removing J502 interrupts the data receive line from the graphic processor.
J502 is available now to be to connected to a terminal or personal computer with terminal emulation by means of the diagnostic adapter (021-0459-00).
Terminal settings: 9600 baud, 8 bits, no parity and 1 stop bit.

Switch on the 571 and it will prompt with the question mark. Report as a remote operator with 't'. Upper or lower case makes no difference.
The 't' causes the troubleshoot program to start as a menu driven program.

### The Menu

*NOTE*
*Underlined italic text is entered by the user.*

The main menu looks on the terminal like :

```
                571 HARDWARE TESTMENU

(1) EXAMINE FRONTKEYS    (6)SETBASE DRIVE/STEP
(2) SET ADC SENSITIVITY (7)SET BASE CURRENT
(3) EXAMINE ADC          (8)SET RC
(4) SET Uce LIMIT        (9)SET GATE VOLTAGE
(5) SET Uce VOLTAGE      (A)SET SELFTEST REGISTER

CURRENT STATUS :
ADC SENS.     :00H  ERRORS       :0EH
Uce LIMIT     :00H  Uce VOLT.    :00H   Rc :00H
BASE/GATE STEP:00H  BASE/GATE DR.:00H
SELFTEST      :00H

MAKE YOUR SELECTION 2
```

At this point you can select one of the tests 1 thru A. In this example the choice is 2.

The submenu under item 2 of the main menu looks like:

```
(1)  5 µA/div (6) 0.2 mA/div   (B)  10 mA/div
(2) 10 µA/div (7) 0.5 mA/div   (C)  20 mA/div
(3) 20 µA/div (8)   1 mA/div   (D)  50 mA/div
(4) 50 µA/div (9)   2 mA/div   (E) 100 mA/div
(5)0.1 mA/div (A)   5 mA/div   (F) 200 mA/div

ENTER YOUR CHOICE _
```

*NOTE*
*If the program control returns from a sub menu, the main menu is not displayed but the status and the prompt. Pressing a valid key selects the desired sub menu, pressing an invalid key causes the main menu to be displayed.*

Scan by Zenith



**Description of Current Status**

The hexadecimal number behind each item reflects the value which is current for the circuit parts named. Each time a complete selection is made the current status will be updated.

- ADC SENS.: 00H

The ADC sensitivity register U201 has been loaded with 00hex.

- Uce LIMIT : 00H

The STEPV register U101 has been loaded with 00hex.

- BASE/GATE STEP: 00H

The STEPB register U303 has been loaded with 00hex.

- SELFTEST: 00H

The SELFTST register U401 has been loaded with 00hex.

- ERRORS: 0EH

Errors in the current status reflect to the hardware status lines just like they are connected to the front panel keypad.
0Ehex = 0000 1110. The highest '1' (bit 3) points to the COVER signal, the next '1' (bit 2) points to the ERRTST signal and the lowest '1' (bit 1) points to the FAILTST signal. The other bits refer to the 'START', 'STOP', 'STORE' and 'CURSOR' keys which are normally released during this activity.

- Uce VOLT.: 00H

The DACV register U102 has been loaded with 00hex.

- BASE/GATE DR.: 00H

The DACB register U301 has been loaded with 00hex.

- Rc : 00H

The R load register U103 has been loaded with 00hex

**Description of the Tests**

*NOTE*
*Values between parentheses mean that a test can be select .*

All eight tests are descibed in the following text.

- ( 1) EXAMINE FRONTKEYS

This test enables testing the front keys and the protection cover switch (testing and adjusting).

- ( 2) SET ADC SENSITIVITY

After selecting a 2 the submenu appears. A selection of the sensitivity of the Emitter Test Circuit can be made.

```
(1)   5 µA/div  (6) 0.2 mA/div (B)  10 mA/div
(2)  10 µA/div  (7) 0.5 mA/div (C)  20 mA/div
(3)  20 µA/div  (8)   1 mA/div (D)  50 mA/div
(4)  50 µA/div  (9)   2 mA/div (E) 100 mA/div
(5) 0.1 mA/div  (A)   5 mA/div (F) 200 mA/div

ENTER YOUR CHOICE F
```

In this example 200 mA/div is selected. Now the next two choices have to be made:

```
P=positive; N=negative P
```

and

```
ASSERT FAILTST ? Y OR N N

LOADED ADDRESS E000H WITH  A0H
```

Scan by Zenith



Positive or negative determines the polarity of the Emitter Test Circuit.
Assert Failtest makes FAILTST (overcurrent signal) active, whether it is low or not.
Loaded Address is the address in the memory map of U201.
The program reports its activity and returns to the main menu selection. Notice the change in the status of the errors.

```
CURRENT STATUS :
ADC SENS.      : A0H ERRORS       : 0CH
Uce LIMIT      : 00H Uce VOLT     : 00H Rc: 00H
BASE/GATE STEP: 00H BASE/GATE DR.: 00H
SELFTEST       : 00H
```

```
- ( 3) EXAMINE ADC
```

The ADC U209 is read twice. The first reading triggers the ADC, the second reading is a valid reading. The data reading during the trigger is displayed as OLD and the DATA from reading is displayed as VALID.

```
- ( 4) SET Uce LIMIT
```

With the Uce limit selection you set the top voltage the collector voltage supply can generate.
The sub menu under item 4 of the main menu will look like:

```
(1) 0.5 V    (3) 2 V     (5) 10 V     (7) 50 V
(2)   1 V    (4) 5 V     (6) 20 V     (8)100 V

ENTER YOUR CHOICE 3
```

In this example (3) is selected.
After your choice the next question must be answered:

```
P=Positive ; N=Negative P
```

Activity report:

```
LOADED ADDRESS CC00H WITH  41H
```

The current status and the main menu selection will look like:

```
CURRENT STATUS :
ADC SENS.      : A0H ERRORS       : 04H
Uce LIMIT      : 41H Uce VOLT.    : 00H  Rc: 00H
BASE/GATE STEP : 00H BASE/GATE DR.: 00H
SELFTEST       : 00H

MAKE YOUR SELECTION 5
```

```
- ( 5) SET Uce VOLTAGE
```

With this test a value to the DACV register U102 is set. A number X between 0 to 250 dec may be entered. The output voltage of the Collector Voltage Supply will be:

$$\frac{\text{Uce limit} * X}{250}$$

The next question that must be answered is:

```
(C)Continuous (P)Pulsed (B)Build up.
```

- "C" sets the required value and returns to the main menu.
- "P" pulses between 0 and the required value. Only after any key was pressed and if an error occurs the program returns to the main menu.
- "B" runs smoothly from zero to the required value and returns to the main menu.

```
- ( 6) SET BASE DRIVE/STEP
```

Item 6 from the main menu looks like:

```
(0)NoBasedrive (4) 5 uA/step (8)0.1 mA/step (C) 2 mA/step
(1)0.5 uA/step (5)10 uA/step (9)0.2 mA/step (D) 5 mA/step
(2)  1 uA/step (6)20 uA/step (A)0.5 mA/step (E)10 mA/step
(3)  2 uA/step (7)50 uA/step (B)  1 mA/step (F)20 mA/step

ENTER YOUR CHOICE 4
```

Next , two questions must be answered:

```
ASSERT ERRTST ? Y OR N   N

ADDRESS D800H LOADED WITH  C1H
ERRTST OCCURRED !!
```

Scan by Zenith



The activity report and an error message are displayed, because there is no load at the basedrive, so the current can't flow.

```
CURRENT STATUS :
ADC SENS.      :A0H   ERRORS       :04H
Uce LIMIT      :41H   Uce VOLT.    :00H   Rc:00H
BASE/GATE STEP:C1H   BASE/GATE DR.:00H
SELFTEST       :00H

MAKE YOUR SELECTION _
```

- ( 7) SET BASE CURRENT

This test sets a value to the DACB register U301.
A number X from 0 to 10 dec may may be entered.
The output of the base/gate drive will be:

+/- X * Ib/step

or

+/- X * Ug/step

depending on the drive being initiated as a basedriven or a gatedriven drive.

The next questions to be answered are:

(P) Positive (N) Negative

- "P" sets a positive voltage or current source.

- "N" sets a negative voltage or current sink.

(C) Continuous (P) Pulsed

- "C" sets the value and returns to the main menu.

- "P" pulses between 0 and X. Only when a key is pressed or an error occurs the program returns to the main menu.

- ( 8) SET RC

This feature enables you to select a load resistance in series with the collector voltage supply:

```
(1)  0  ohm   (3) 100  ohm   (5)  10 Kohm
(2) 10  ohm   (4)   1 Kohm

ENTER YOUR CHOICE 5
```

The activity report looks like:

```
LOADED ADDRESS D000H WITH 00H

CURRENT STATUS :
ADC SENS.      :A0H  ERRORS       : 04H
Uce LIMIT      :41H  Uce VOLT.    : 00H Rc : 00H
BASE/GATE STEP:C1H  BASE/GATE DR.: 00H
SELFTEST       :00H

MAKE YOUR SELECTION _
```

- ( 9) SET GATE VOLTAGE

Item 9 from the main menu enables you to select the maximum allowed gate voltage.

```
( 1) 2.5  Vmax  (2) 5  Vmax (3) 10   Vmax

ENTER YOUR CHOICE 1
```

The activity report will look like:

```
ADDRESS 0D800H LOADED WITH  88H

CURRENT STATUS :
ADC SENS.      :A0H  ERRORS       :00H
Uce LIMIT      :41H  Uce VOLT.    :00H  Rc :00H
BASE/GATE STEP:88H  BASE/GATE DR.:00H
SELFTEST       :00H

MAKE YOUR SELECTION _
```

Scan by Zenith



```
- ( A) SET SELFTEST REGISTER
```

This is the last item from the main menu. It reflects to the connections that can be made on the front panel board in the test socket array.
The sub menu has four selections; in this example the "No selftest" is selected:

```
( 0) No selftest  ( 1) Collector supply
( 2) R ref        ( 3) Basedrive

ENTER YOUR CHOICE 0
```

The activity report will look like:

```
ADDRESS 0E800H LOADED WITH  00H
```

- "No selftest" means all contacts open.

- "Collector supply" short circuits the collector supply via R401 to the emitter test circuit.

- "R ref" connects the collector supply to the emitter test circuit.

- "Basedrive" connects the base/gate drive to the emitter test circuit.

*NOTE*

*In some exceptional cases R170 (collector supply offset) may need to be readjusted. Use the trouble shoot program to initialize the 571 for 0 V in the 10 V range. Connect a DM504A in DC voltage mode to the 'E' and 'C' jackets of the 571 front panel. Adjust R170 to a voltage as close to 0 V as possible, but NOT below 0 VOLT! Check every positive collector supply voltage range , that at 0 Volt, the offset is NOT below 0 V.*

Scan by Zenith



# MAINTENANCE

## GENERAL INFORMATION

### Introduction

This section of the manual provides maintenance instructions and serving information for the 571.

**WARNING**

*Dangerous potentials exist at several points throughout the instrument and power module. When the power module must be operated with the cabinet removed, do not touch exposed connections or components. Disconnect power before cabinet removal, cleaning, or replacing parts.*

### Static-Sensitive Components

**CAUTION**

*Static discharge may damage semiconductor components in this instrument.*

This instrument contains electrical components that are susceptible to damage from static discharge. See Table 4-1 for relative susceptibility of various classes of semiconductors. Static voltages of 1 kV to 30 kV are common in unprotected environments.

Observe the following precautions to avoid damage:

1. Minimize handling of static-sensitive components.
2. Transport and store static-sensitive components or assemblies in their original containers, on a metal rail, or on conductive foam. Label any package that contains static-sensitive assemblies or components.
3. Discharge the static voltage from your body by wearing a grounded wrist strap while handling these components. Servicing static-sensitive assemblies or components should be performed only at a static-free work station by qualified service personnel.
4. Allow nothing capable of generating or holding a static charge on the work station surface.
5. Keep the component leads shorted together whenever possible.
6. Pick up components by the body, never by the leads.
7. Do not slide the components over any surface.
8. Avoid handling components in areas that have a floor or work surface covering capable of generating a static charge.
9. Use a soldering iron that is connected to earth ground.
10. Use only special antistatic suction type or wick type desoldering tools.

**Table 4-1**
**RELATIVE SUSCEPTIBILITY TO STATIC DISCHARGE DAMAGE**

| Semiconductor Classes | Relative Susceptibility Levels [a] |
|---|---|
| MOS or CMOS microcircuits or discretes, or linear microcircuits with MOS inputs. (Most Sensitive) | 1 |
| ECL | 2 |
| Schottky signal diodes | 3 |
| Schottky TTL | 4 |
| High-frequency bipolar transistors | 5 |
| JFETs | 6 |
| Linear microcircuits | 7 |
| Low-power Schottky TTL | 8 |
| TTL (Least Sensitive) | 9 |

[a] **Voltage equivalent for levels:**

| | | |
|---|---|---|
| 1 = 100 to 500 V | 4 = 500 V | 7 = 400 to 1000 V(est.) |
| 2 = 200 to 500 V | 5 = 400 to 600 V | 8 = 900 V |
| 3 = 250 V | 6 = 600 to 800 V | 9 = 1200 V |

**(Voltage discharged from a 100 pF capacitor through a resistance of 100 ohms.)**

Scan by Zenith



### Test Equipment

Before using any test equipment to make measurements on static-sensitive components or assemblies, be certain that any voltage or current supplied by the test equipment does not exceed the limits of the component to be tested.

### Cleaning Instructions

This instrument should be cleaned as often as operating conditions require. Loose dust accumulated on the outside of the instrument can be removed with a soft cloth or small brush. Remove dirt that remains with a soft cloth dampened in a mild detergent an water solution.
Do not use abrasive cleaners.

**CAUTION**

*To clean the front panel use fisopropyl alcohol or denatured ethyl alcohol. Do not use petroleum based cleansing agents. Do not use air or any solvent to clean the Display (front panel) board. Before using any other type of cleaner, consult your Tektronix Service Center or representative.*

The best way to clean the interior is to blow off the accumulated dust with dry, low-velocity air (approximately 5 lbs. / in˝) or use a soft brush or cloth dampened with a mild detergent and water solution. Hold the board such that the residue runs away from the connectors. Do not scrape or use an eraser to clean the edge connector contacts. Abrasive cleaning can remove the gold plating.

**CAUTION**

*Circuit boards and components must be dry before applying power.*

### Obtaining Replacement Parts

Electrical and mechanical parts can be obtained through your local Tektronix Field Office or representative. However, many of the standard electronic components can be obtained from a local commercial source.

Before purchasing or ordering parts from a source other than Tektronix, Inc., check the Replaceable Electrical Parts list for the proper value, rating, tolerance, and description.

### Ordering Parts

When ordering replacement parts from Tektronix, Inc., it is important to include all of the following information.

1. Instrument type (include modification or option numbers).
2. Instrument serial number.
3. A description of the part (if electrical, include the component number).
4. Tektronix part number.

### Soldering Techniques

**WARNING**

*To avoid electric shock hazard, disconnect the instrument from the power source before soldering.*

The reliability and accuracy of this instrument can be maintained only if proper soldering techniques are used when repairing or replacing parts. General soldering techniques which apply to maintenance of any precision electronic equipment should be used when working on this instrument. Use only 60/40 rosin-core, electronic-grade solder. The choice of soldering iron is determined by the repair to be made.

When soldering on circuit boards or small wiring, use only a 15 watt pencil type iron. A higher wattage soldering iron can cause the etched circuit wiring to separate from the board base material and melt the insulation from small wiring. Always keep the soldering iron tip properly tinned to ensure the best heat transfer to the solder joint. Apply only enough heat to remove the component or to make a good solder joint. To protect heat sensitive components, hold the component lead with a pair of long-nose pliers between the component body and the solder joint. Use a solder removing wick to remove excess solder from connections or to clean circuit board pads.

Scan by Zenith



### Semiconductors

To remove the in-line integrated circuits installed in sockets, use an extracting tool. This tool is available from Tektronix, inc.; order Tektronix Part Number 003-0619-00. If an extracting tool is not available, use care to avoid damaging the pins. Pull slowly and evenly on both ends of the integrated circuit. Try to avoid disengaging one end before the other. IC's that are soldered in should be carefully unsoldered, using commercially available de-soldering tools. If these tools are not available, the pins in the IC may be clipped with diagonal cutters, and the pins then individually removed from the board.

## DISASSEMBLY INSTRUCTIONS

Before starting, make sure the 571 is disconnected from the power line during any of the following operations.
For mounting screw positions, see Fig. 4-1 .

### Top Cover Removal

Release the four screws in the side rails left and right of the cabinet.
Remove the two screws marked 'A'.
Lift the cover at the rear, when the two rear brackets are free from the rear panel, move the top cover backwards and remove the top cover from the 571.
When the top cover is reinstalled, the grounding bracket, that is spotwelded at the inside of the cover, must be positioned at the inside of the plastic front panel.

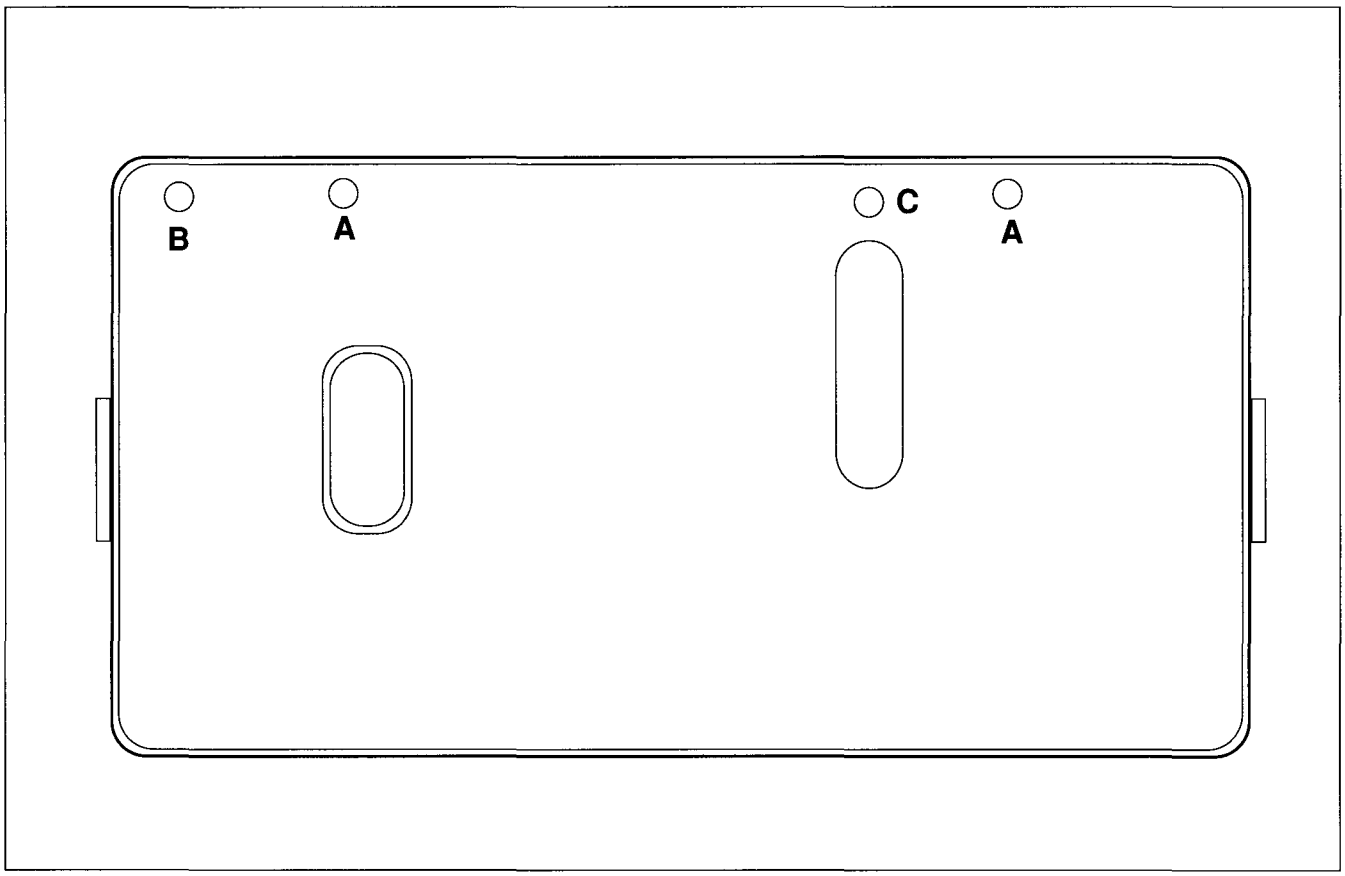


**Fig. 4-1 Mounting Screws Rear Panel**

Scan by Zenith



### Collector Power Supply Removal

Remove the top cover.
Remove connectors J102, J103, J104, J100 and J101.
Place the instrument on its rear side.

**CAUTION**

*Do not place the 571 on its front, otherwise the test sockets may be damaged!*

Remove the two screws at the right side of the bottom.
Place the instrument upright.
Remove the screw ( marked 'B' ) at the rear side.
Remove the screw in the top right of the front panel.
Lift the right bracket at the rear and pull it backwards.
When the extension shaft of the power switch is free from the front panel, lift the assembly carefully from the cabinet.
Remove J704.
To remove the board from the bracket, remove eight board mounting screws.

### Front Panel Removal

Remove the top cover.
Remove the high voltage connector from the C.R.T.

**WARNING**

*The CRT may store high voltages after power off!*

Remove the quick disconnect plug from the CRT socket board and move the connector in the high voltage connector of the CRT to discharge it.
Remove the deflection plug from the deflection board.
Remove the CRT socket board from the CRT neck.
Remove the left top bracket with two screws, one from the top of the front panel and one marked 'C' from the rear panel.
Remove the screw from the bracket of the collector voltage power supply.
Place the instrument on its rear side.
Remove the two screws from the front end of the side rails. Remove the three screws from the bottom side.
Carefully lift the front panel from the cabinet.

When installing the front panel again, the grounding bracket, spotwelded at the inside of the bottom pan, must be positioned at the inside of the front panel.

### Keypad and Test Socket Board Removal

Remove the top cover.
Remove the front panel.
Position the protection cover of the front panel in the open position.
Place the front panel on a sheet of foam, inside up.
Release the two springs from the board left and right from the protection cover.
Remove the six board mounting screws.
Carefully lift the board from the front panel.
When installing the board again, make sure that the front panel keys switch smoothly and do not bind against the front panel.

### Main Board Removal

Remove the top cover.
Remove the front panel.
Remove J701, J702, J703, J602, J603, J625, J502, J500, J501, J201 and J202.
Remove the 10 board mounting screws.
Move the main board forwards and remove it from the cabinet.
When installing the main board again, make sure it fits correctly in the mounting rail at the rear side of the cabinet.

### Protection Cover Removal

Remove the top cover.
Position the protection cover in closed position.
Release the 2 springs left and right from the cover from the front board.
Position the cover in a half open half closed position.
Bend the cover carefully to make it a little wider and remove it at one side from the pivot. Repeat for the other side.
Turn the cover to the inside of the cabinet and remove it along the inside.

Scan by Zenith



# REPLACEABLE ELECTRICAL PARTS

## PARTS ORDERING INFORMATION

Replacement parts are available from or through your local Tektronix, Inc. Field Office or representitive.

Changes to Tektronix instruments are sometimes made to accomodate improved components as they become available, and to give you the benefit of the latest circuit improvements developed in our engineering department. It is therefore important, when ordereing parts, to include the following information in your order: Part number, instrument type or number, serial number, and modification number if applicable.

If a part you have ordered has been replaced with a new or improved part, your local Tektronix, Inc. Field Office or representitive will contact you concerning any change in part number .

Change information, if any, is located at the rear of this manual.

### LIST OF ASSEMBLIES

A list of assemblies can be found at the beginning of the Electrical Parts List. The assemblies are listed in numerical order. When the complete component number of a part is known, this list will identify the assembly in which the part is located.

### CROSS INDEX-MFR. CODE NUMBER TO MANUFACTURER

The Manufacturer Code Number to Manufacturer index for the Electrical Parts List is located immediately after this page. The Cross Index provides codes, names and addresses of manufacturers of components listed in the Electrical Parts List.

### COMPONENT NUMBER
**(Column one of the Electrical Part List)**

A numbering system has been used to identify assemblies, subassemblies and parts. Examples of this numbering system and typical expansions are illustrated by the following:

**Example a :**

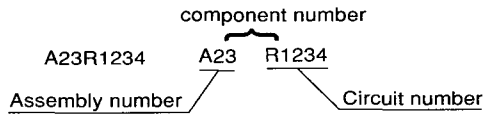


**Read : Resistor 1234 of Assembly 23**

**Example b:**

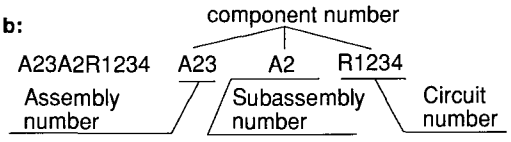


**Read : Resistor 1234 of Subassembly 2 of Assembly 23**

Only the circuit number will appear on the diagrams and circuit board illustrations. Each diagram and circuit board illustration is clearly marked with the assembly number. The component number is obtained by adding the assembly number prefix to the circuit number.

The Electrical Parts List is divided and arranged by assemblies in numerical sequence (e.g., assembly A1 with its subassemblies and parts, precedes assembly A2 with its subassemblies and parts).

Chassis-mounted parts have no assembly number prefix.

### TEKTRONIX PART NO.
**(column two of the Electrical Parts List)**

Indicates part number to be used when ordering replacement part from Tektronix.

### SERIAL/MODEL NO.
**(column three and four of the Electrical Parts List)**

Column three (3) indicates the serial number at which the part was first used. Column four (4) indicates the part number at which the part was removed. No serial number entered indicates the part is good for all serial numbers.

### NAME & DESCRIPTION
**(column five of the Electrical Parts List)**

In the Parts List, an Item Name is seperated from the description by a colon (:). Because of space limitations, an Item Name may sometimes appear as incomplete.

### MFR. CODE
**(column six of the Electrical Parts List)**

Indicates the code number of the actual manufacturer of the part. (Code to name and address cross reference can be found immediately after this page.)

### MFR. PART NUMBER
**(column seven of the Electrical Parts List)**

Indicates actual manufacturers part number

Scan by Zenith



## CROSS INDEX - MFR. CODE NUMBER TO MANUFACTURER

| Mfr. Code | Manufacturer | address | City, State, Zip Code |
|---|---|---|---|
| 8009 | TEKTRONIX INC | 14150 SW KARL BRAUN DR | BEAVERTON OR 9707-0001 |

## REPLACEABLE ELECTRICAL PARTS

| Component No. | Tektronix Part No. | Serial/Assembly No. Effective Dscont | Name & Description | Mfr. Code | Mfr. Part No. |
|---|---|---|---|---|---|
| A10 | 671-1498-01 | | CIRCUIT BD ASSY:COLL SUPPLY BD | 80009 | 671-1498-01 |
| A11 | 671-1497-01 | | CIRCUIT BD ASSY:MAIN BD | 80009 | 671-1497-01 |
| A12 | 671-1496-01 | | CIRCUIT BD ASSY:FRONT PANEL BD | 80009 | 671-1496-01 |
| ----- | 119-3808-00 | | FILTER,RF ,110/120-220/240V 50/60HZ | 80009 | 119-3808-00 |
| ----- | 119-3795-00 | | MONITOR, DISPLAY,9" MONOCHR | 80009 | 119-3795-00 |
| T1 | 120-1849-00 | | TRANSFORMER, PWR,TORR,W2628 | 80009 | 120-1849-00 |
| ----- | 174-2054-00 | | CABLE ASSY | 80009 | 174-2054-00 |
| ----- | 174-2074-00 | | CABLE ASSY | 80009 | 174-2074-00 |
| S501 | 260-2521-00 | | SWITCH,SLIDE,SLS 222,3 CONTACT | 80009 | 260-2521-00 |

Scan by Zenith



# DIAGRAMS AND CIRCUIT BOARD ILLUSTRATIONS

## Symbols

Logic symbology is based in terms of positive logic. Logic symbols depict the logic function performed and may differ from the manufacturer's data.

## Component Values

Electrical components shown on the diagrams are in the following units noted otherwise:

Capacitors = Values one or greater are in picofarads (pF). Values less than one are in microfarads (μF)

Resistors = Ohms (Ω)

## Assembly Numbers

Each assembly in the instrument is assigned an assembly number (e.g. A10). The assembly number appears on the circuit board outline on the diagram and in the title for the circuit board component location illustration. The Replaceable Electrical Parts list is arranged by assemblies in number sequence.
*(see following illustration for constructing a component number).
When more than one schematic diagram is used to illustrate the circuitry on a circuit board, the circuit board illustration appears opposite to every diagram on which it was illustrated.

* COMPONENT NUMBER EXAMPLE

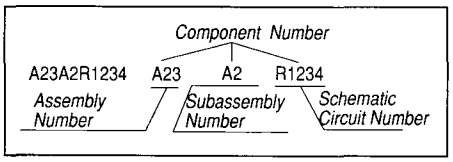


Chassis-mounted components have no Assembly Number prefix - see end of REPLACEABLE ELECTRICAL PART LIST.

Scan by Zenith



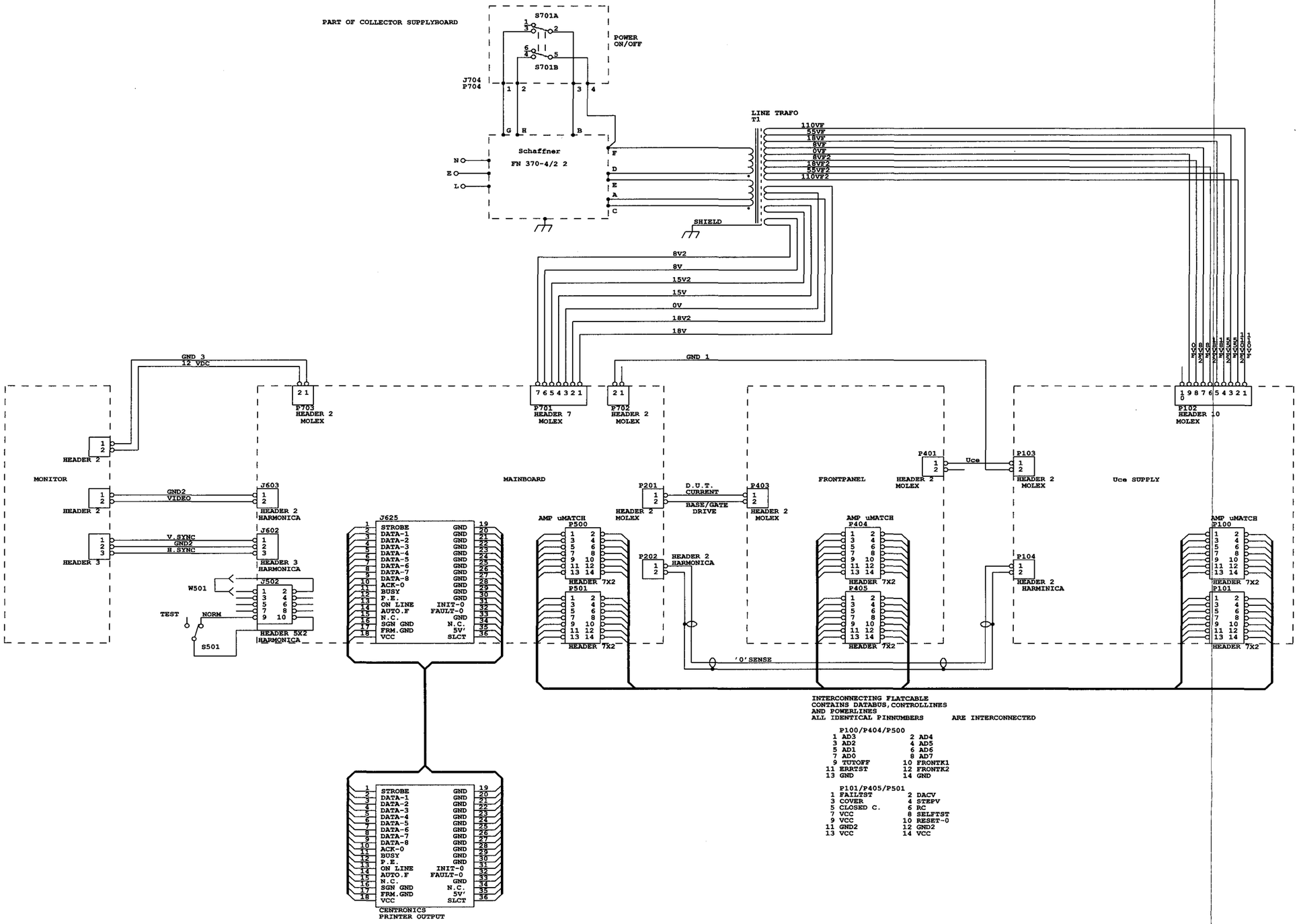

Scan by Zenith



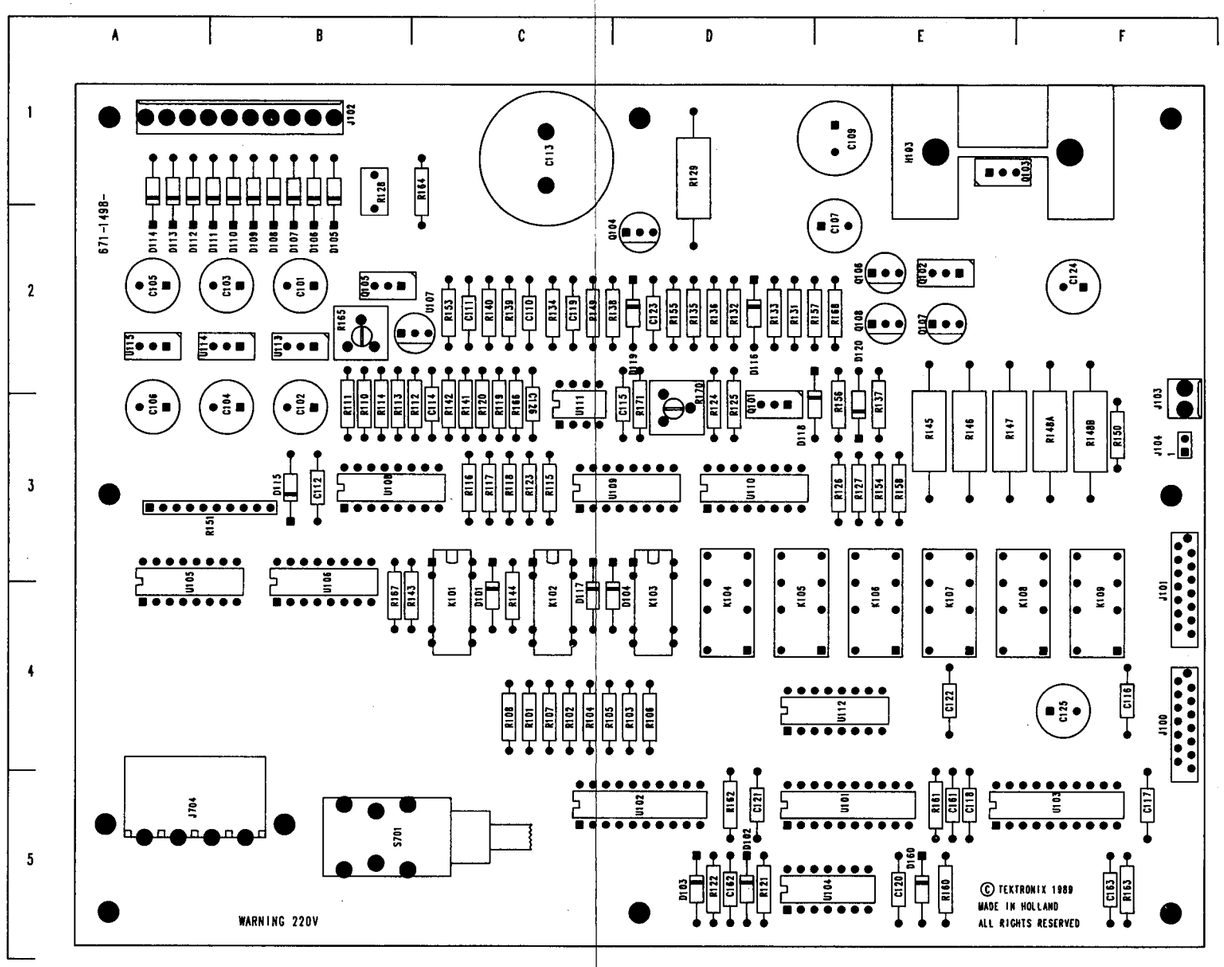


NOTE: S701 IS LOCATED ON
BACK OF THE BOARD

STATIC SENSITIVE DEVICES
SEE MAINTENANCE SECTION

COMPONENT NUMBER EXAMPLE

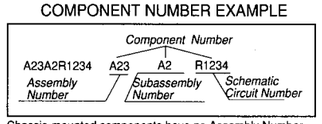


Chassis-mounted components have no Assembly Number prefix - see end of REPLACEABLE ELECTRICAL PART LIST.

Fig. 7-1 Collector Supply Board (A10)

A10 ASSY

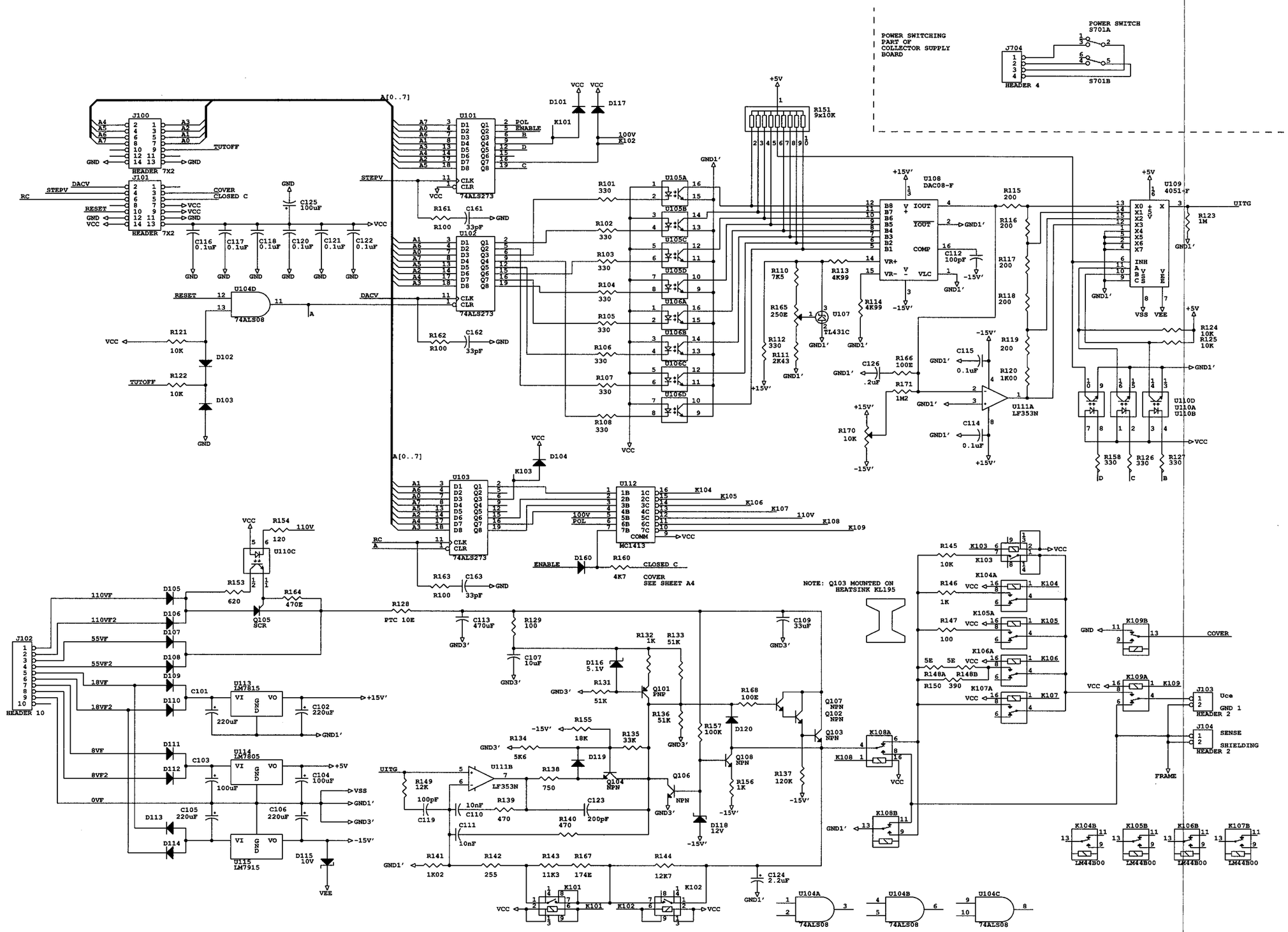
POWER SWITCHING PART OF COLLECTOR SUPPLY BOARD
POWER SWITCH S701A
S701B
J704
HEADER 4
J100
HEADER 7X2
J101
HEADER 7X2
U101
74ALS273
U102
74ALS273
U103
74ALS273
U104D
74ALS08
U105A
U105B
U105C
U105D
U106A
U106B
U106C
U106D
U107
TL431C
U108
DAC08-F
U109
4051-F
U110C
U110D
U110A
U110B
U111A
LF353N
U111B
LF353N
U112
MC1413
U113
LM7815
U114
LM7805
U115
LM7915
Q105
SCR
Q101
PNP
Q102
NPN
Q103
NPN
Q104
NPN
Q106
NPN
Q107
NPN
Q108
NPN
J102
HEADER 10
J103
HEADER 2
J104
HEADER 2
K101
K102
K103
K104
K105
K106
K107
K108
K109
K104A
K105A
K106A
K107A
K108A
K108B
K109A
K109B
K104B
K105B
K106B
K107B
LM44B00
74ALS08
NOTE: Q103 MOUNTED ON HEATSINK KL195
COVER SEE SHEET A4
A[0..7]
STEPV
DACV
RC
RESET
TUTOFF
ENABLE
POL
COVER
CLOSED C
UITG
VSS
VEE
FRAME
COVER
SENSE
SHIELDING
Uce
GND 1
110VF
110VF2
55VF
55VF2
18VF
18VF2
8VF
8VF2
0VF
+15V
-15V
+5V
VCC
GND
GND1'
GND3'

Scan by Zenith





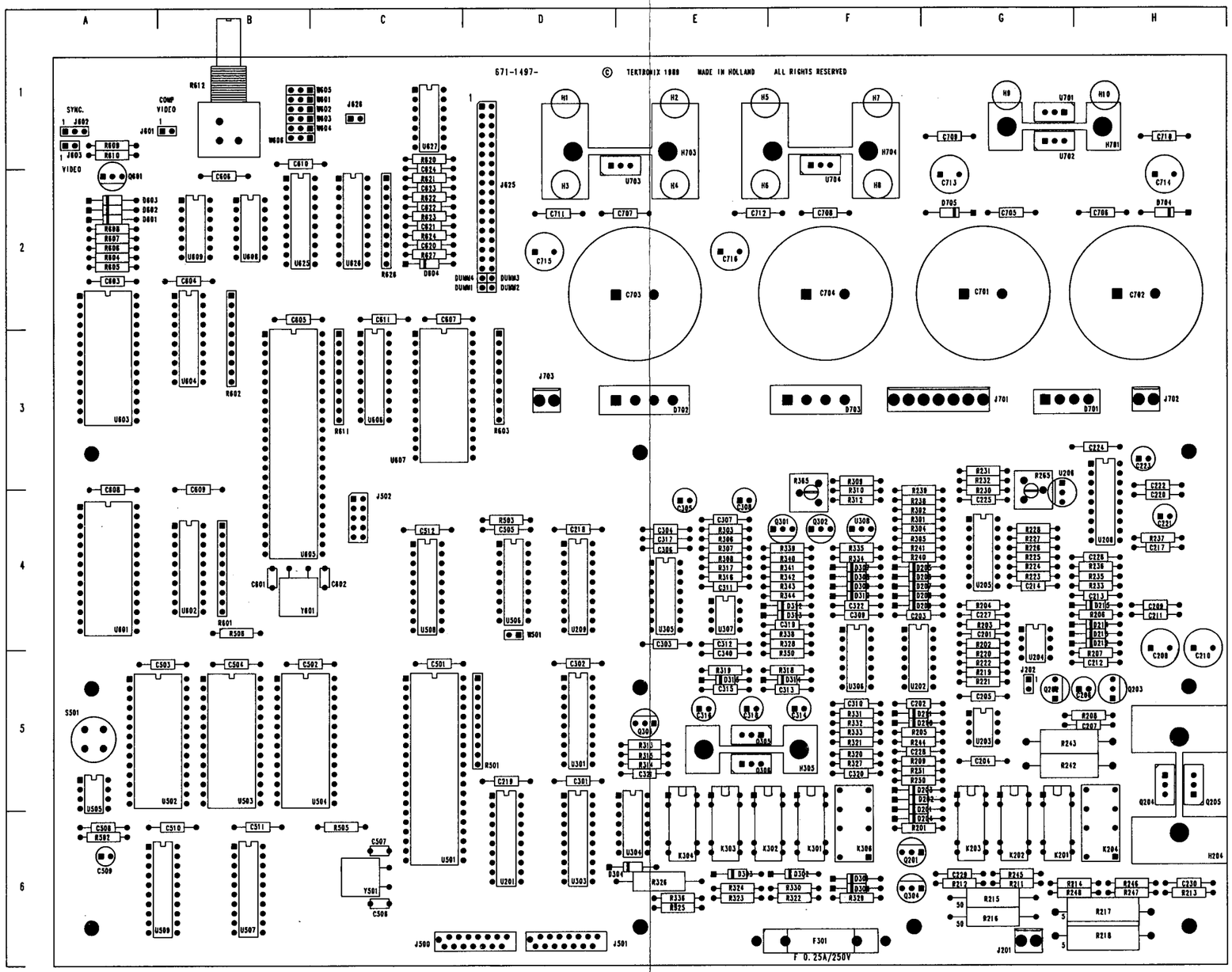


Fig. 7-2 Main Board (A11)

A11 ASSY

STATIC SENSITIVE DEVICES
SEE MAINTENANCE SECTION

COMPONENT NUMBER EXAMPLE

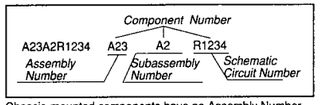


Chassis-mounted components have no Assembly Number prefix - see end of REPLACEABLE ELECTRICAL PART LIST.

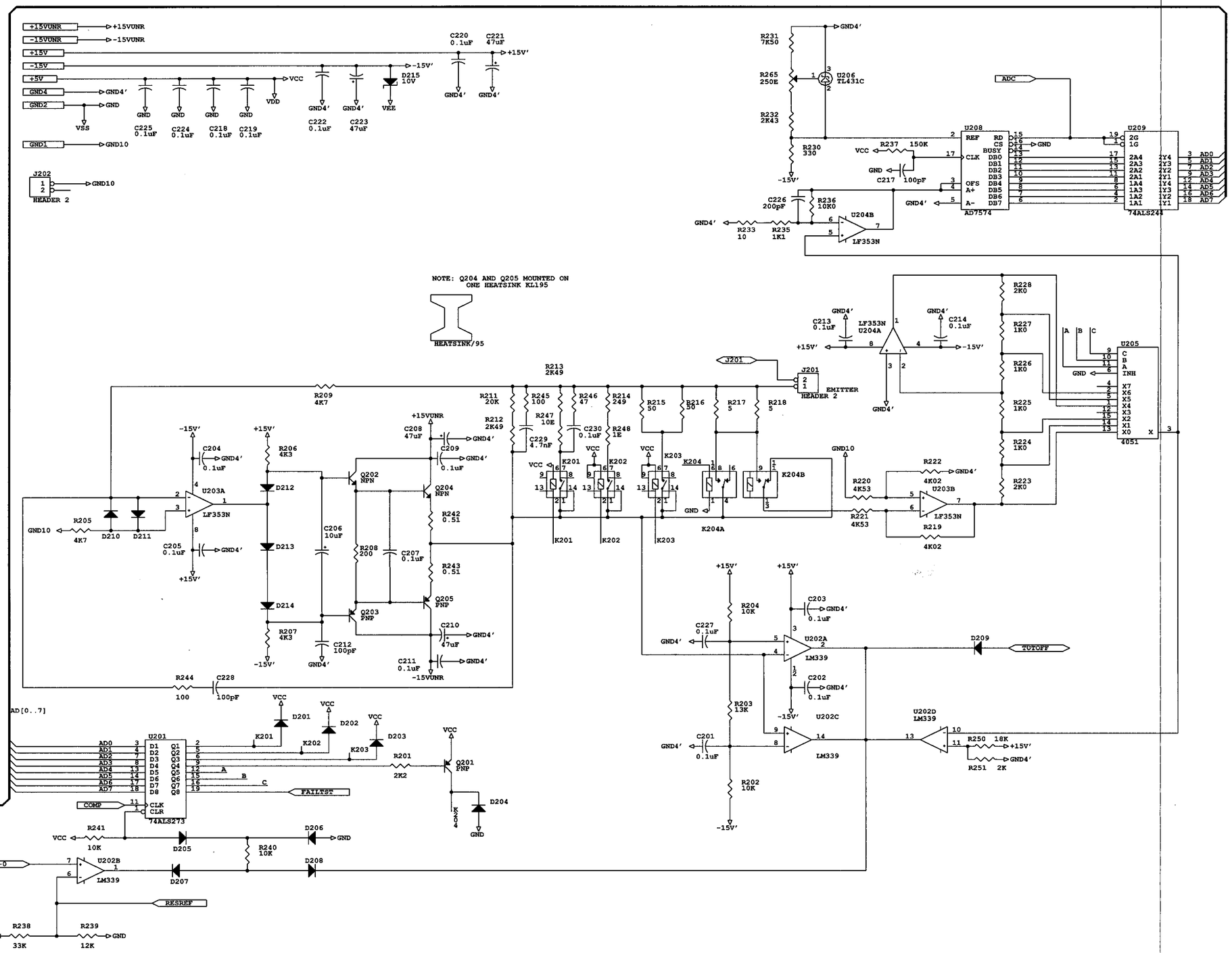
+15VUNR
-15VUNR
+15V
-15V
+5V
GND4
GND2
GND1
J202
HEADER 2
C220 0.1uF
C221 47uF
D215 10V
VCC
VDD
VSS
VEE
C225 0.1uF
C224 0.1uF
C218 0.1uF
C219 0.1uF
C222 0.1uF
C223 47uF
R231 7K50
R265 250E
R232 2K43
U206 TL431C
ADC
U208
AD7574
U209
74ALS244
R237 150K
C217 100pF
C226 200pF
R236 10K0
U204B
LF353N
R233 10
R235 1K1
NOTE: Q204 AND Q205 MOUNTED ON ONE HEATSINK KL195
HEATSINK/95
J201
EMITTER HEADER 2
C213 0.1uF
LF353N U204A
C214 0.1uF
U205
4051
R228 2K0
R227 1K0
R226 1K0
R225 1K0
R224 1K0
R223 2K0
R209 4K7
R213 2K49
R211 20K
R212 2K49
R245 100
R247 10E
R229 4.7nF
R246 47
C230 0.1uF
R214 249
R248 1E
R215 50
R216 50
R217 5
R218 5
C208 47uF
C209 0.1uF
C204 0.1uF
R206 4K3
U203A
LF353N
R205 4K7
D210
D211
C205 0.1uF
D212
D213
D214
R207 4K3
C206 10uF
C212 100pF
Q202 NPN
Q204 NPN
R208 200
C207 0.1uF
R242 0.51
R243 0.51
Q203 PNP
Q205 PNP
C210 47uF
C211 0.1uF
R244 100
C228 100pF
K201
K202
K203
K204
K204A
K204B
R220 4K53
R221 4K53
R222 4K02
R219 4K02
U203B
LF353N
R204 10K
R203 13K
R202 10K
C203 0.1uF
C227 0.1uF
U202A
LM339
C202 0.1uF
U202C
LM339
C201 0.1uF
D209
TUTOFF
U202D LM339
R250 18K
R251 2K
AD[0..7]
U201
74ALS273
D201
D202
D203
R201 2K2
Q201 PNP
D204
FAILTST
COMP
R241 10K
D205
D206
R240 10K
D207
D208
U202B
LM339
RESET-0
RESREF
R238 33K
R239 12K

Scan by Zenith





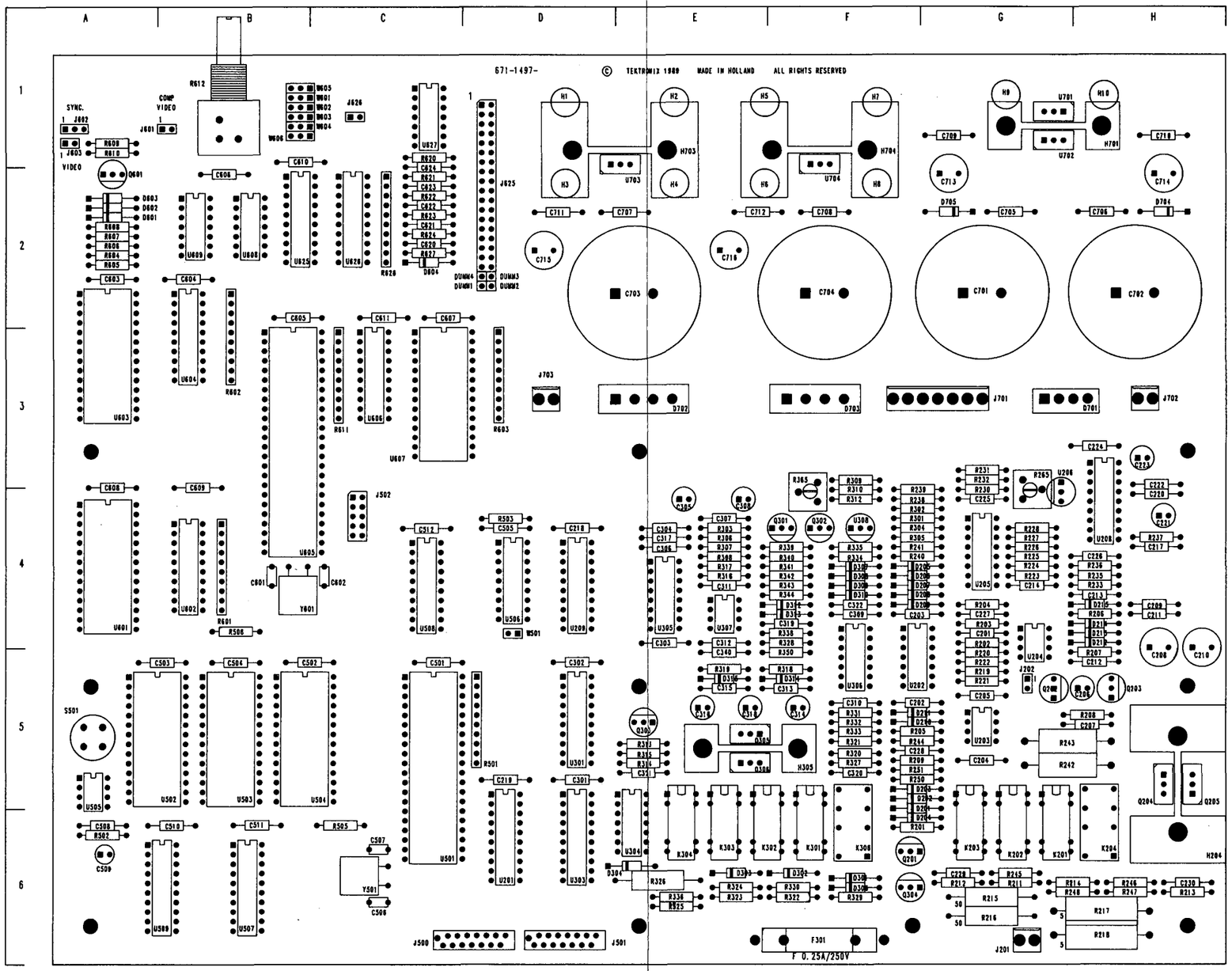


Fig. 7-2 Main Board (A11)

A11 ASSY

STATIC SENSITIVE DEVICES
SEE MAINTENANCE SECTION

COMPONENT NUMBER EXAMPLE

| Component Number | | | |
|---|---|---|---|
| A23A2R1234 | A23 | A2 | R1234 |
| Assembly Number | | Subassembly Number | Schematic Circuit Number |

Chassis-mounted components have no Assembly Number prefix - see end of REPLACEABLE ELECTRICAL PART LIST.

Scan by Zenith



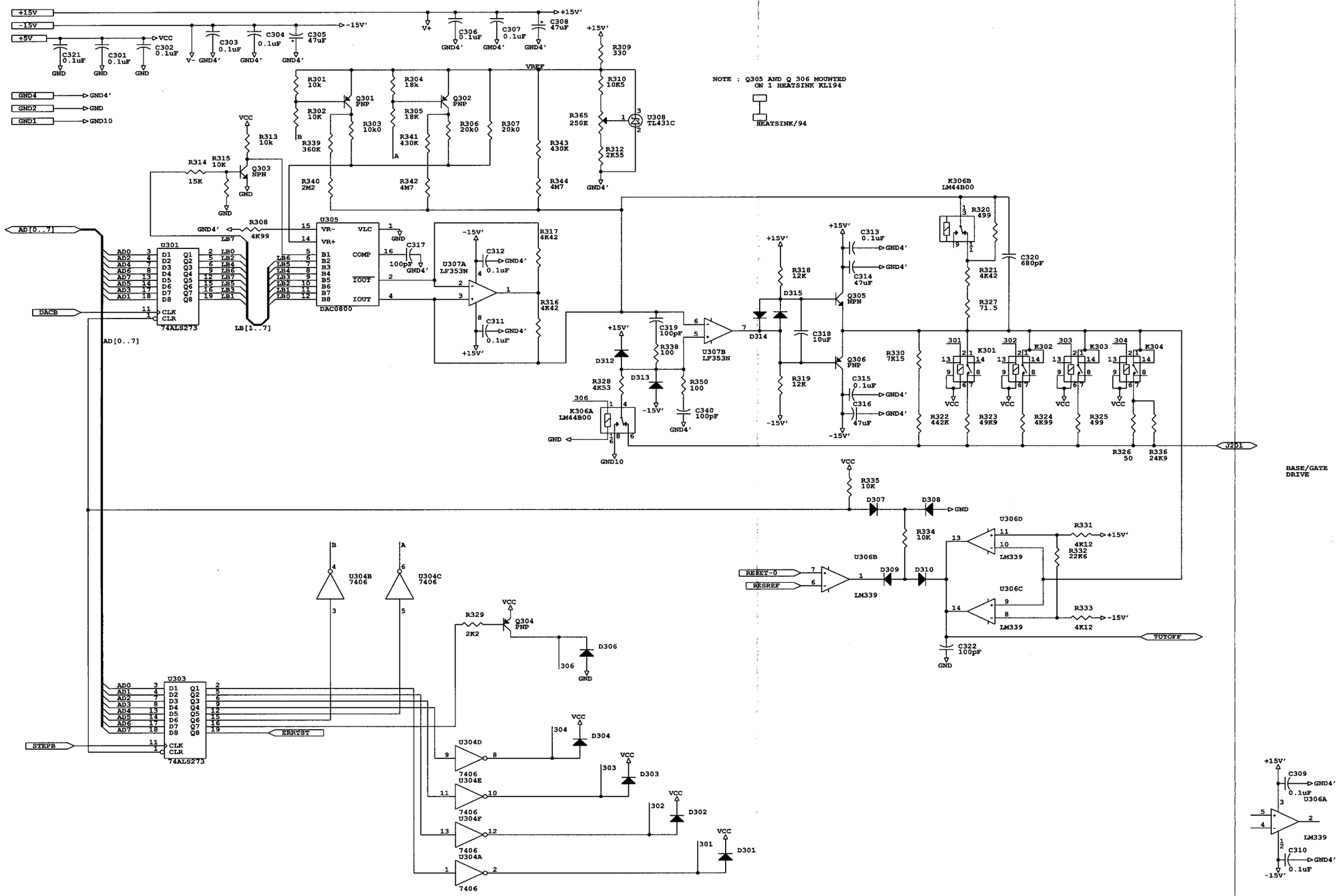

Scan by Zenith

Henk Korpershoek
Heerenveen 00931-5130-35355

260-2520-00

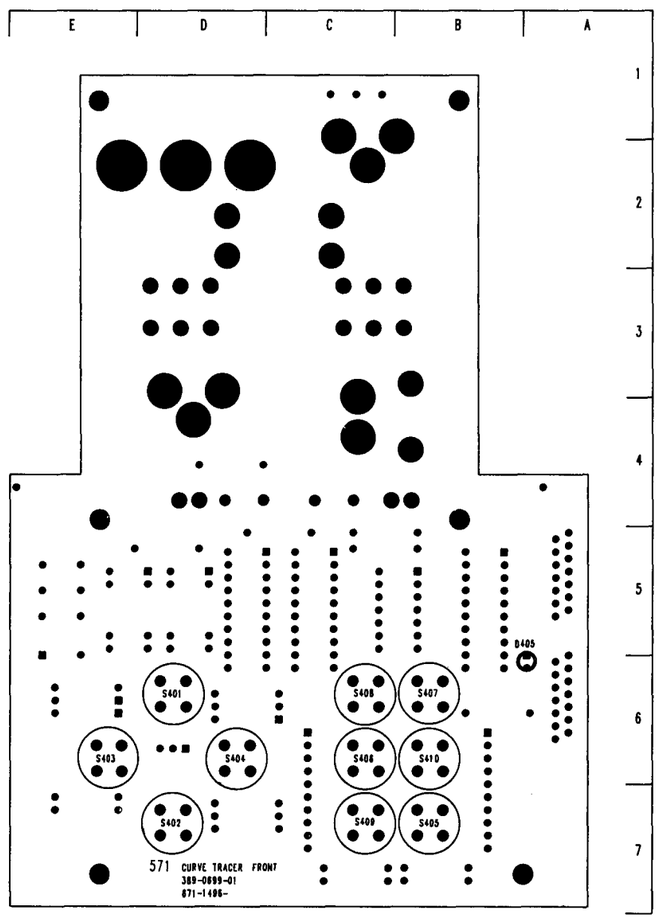


671 FRONT BOARD (SWITCH SIDE)

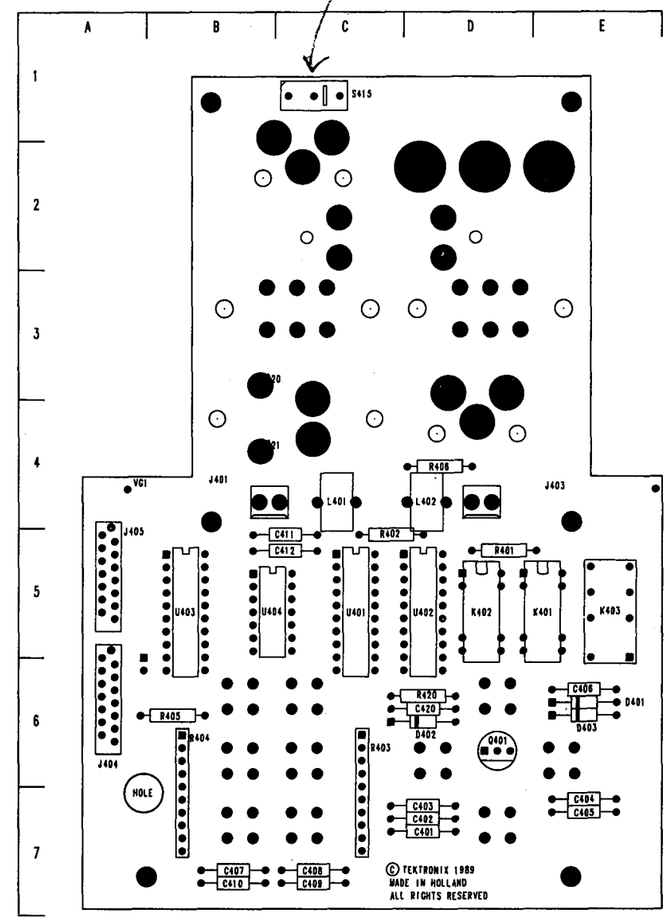


571 FRONT BOARD (COMPONENT SIDE)

STATIC SENSITIVE DEVICES
SEE MAINTENANCE SECTION

COMPONENT NUMBER EXAMPLE

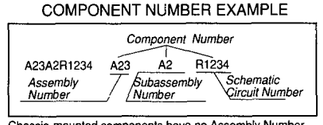


Chassis-mounted components have no Assembly Number prefix - see end of REPLACEABLE ELECTRICAL PART LIST.

**Fig. 7-3 Front Panel Board (A12)**

**A12 ASSY**

Scan by Zenith



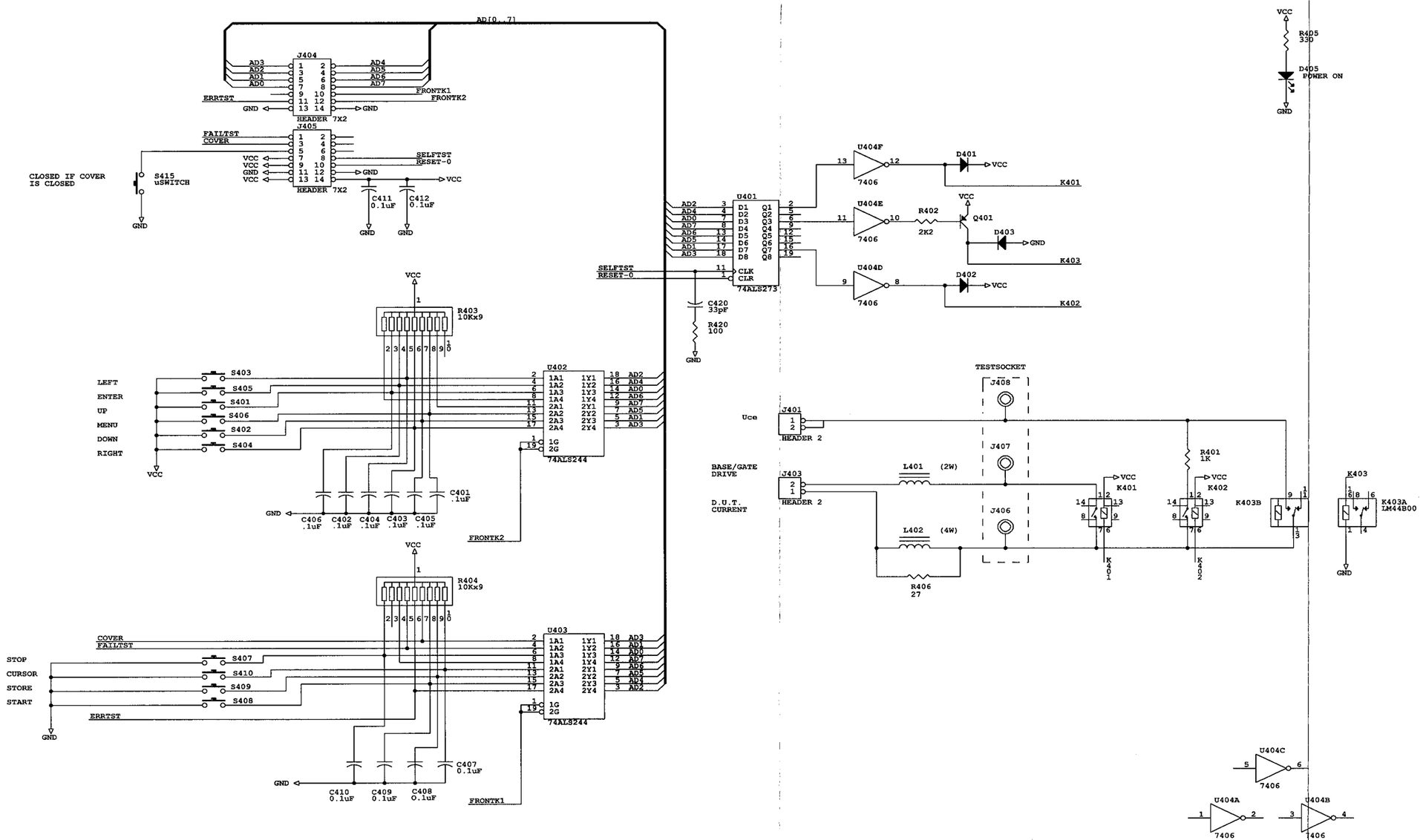




FRONT PANEL CIRCUIT 5

P/O A12 FRONT PANEL BOARD (numbers 400-499)

Scan by Zenith



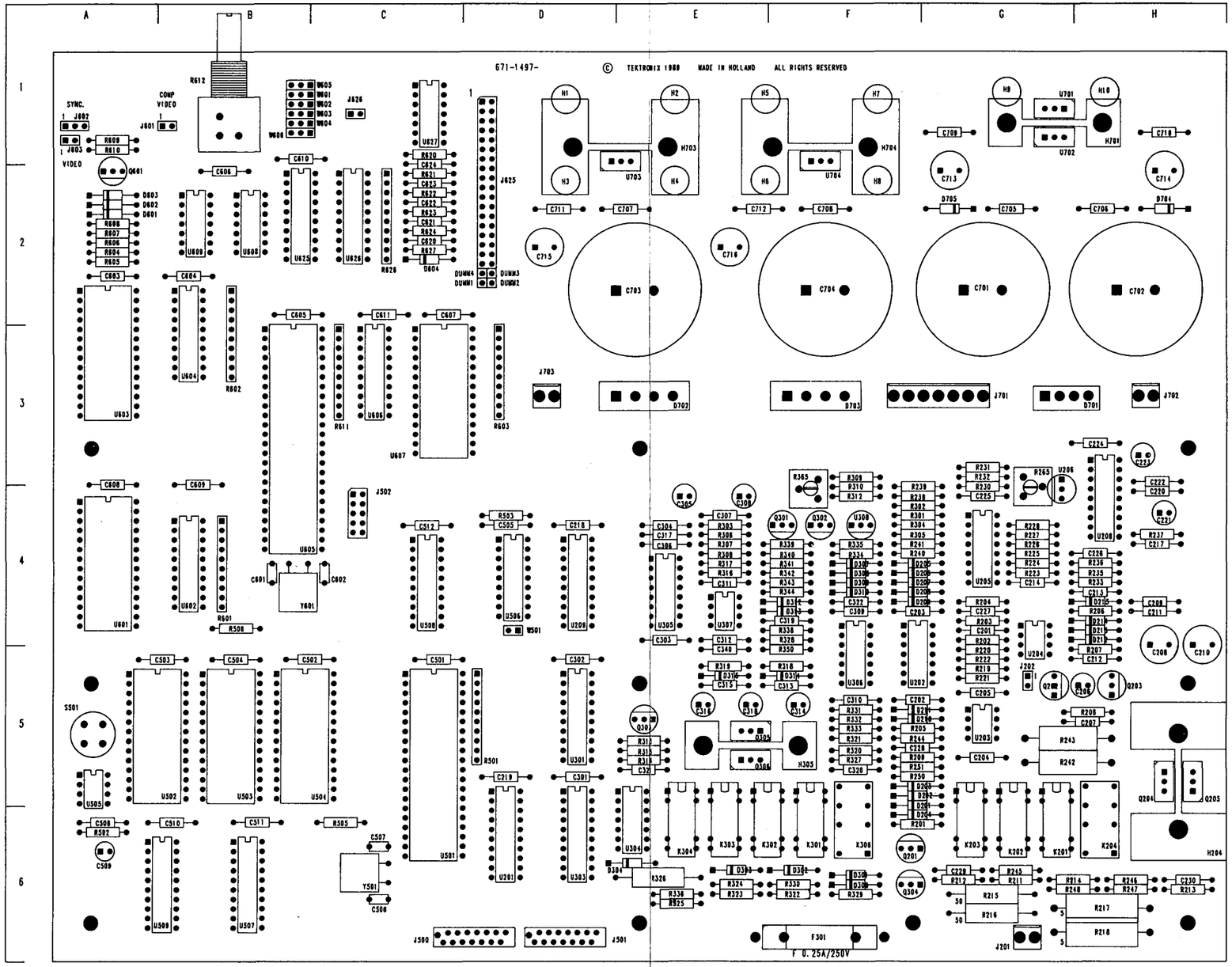


STATIC SENSITIVE DEVICES
SEE MAINTENANCE SECTION

COMPONENT NUMBER EXAMPLE

Component Number

A23A2R1234 — A23 Assembly Number; A2 Subassembly Number; R1234 Schematic Circuit Number

Chassis-mounted components have no Assembly Number prefix - see end of REPLACEABLE ELECTRICAL PART LIST.

Fig. 7-2 Main Board (A11)

A11 ASSY

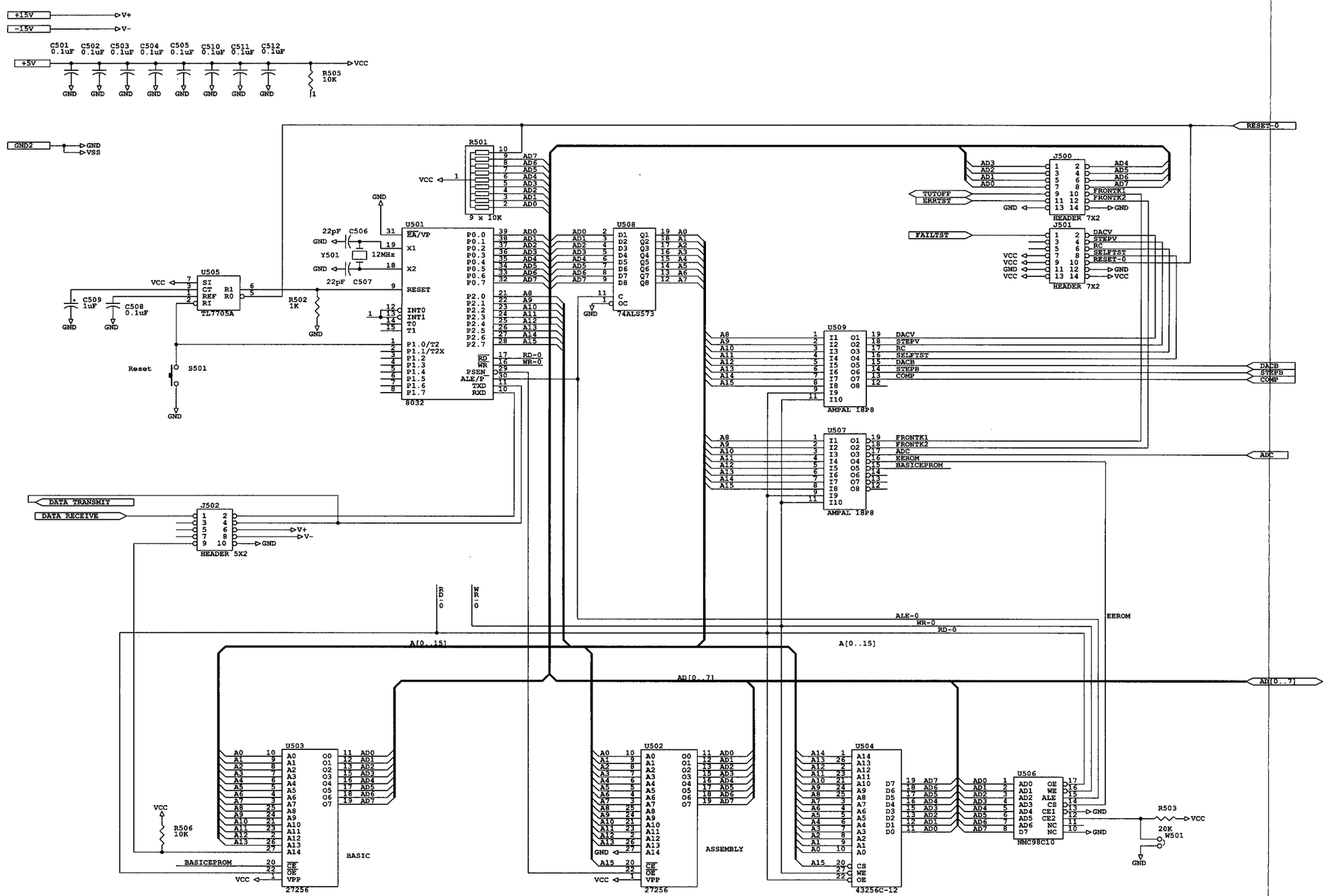
+15V
-15V
+5V
C501 0.1uF
C502 0.1uF
C503 0.1uF
C504 0.1uF
C505 0.1uF
C510 0.1uF
C511 0.1uF
C512 0.1uF
R505 10K
GND2
RESET-0
R501
9 x 10K
U501
8032
U508
74ALS573
U505
EL7705A
C509 1uF
C508 0.1uF
R502 1K
22pF C506
22pF C507
Y501 12MHz
Reset
S501
J500
HEADER 7X2
J501
HEADER 7X2
TUTOFF
ERRTST
FAILTST
U509
AMPAL 18P8
U507
AMPAL 18P8
DACB
STEPB
COMP
ADC
DATA TRANSMIT
DATA RECEIVE
J502
HEADER 5X2
EEROM
ALE-0
WR-0
RD-0
A[0..15]
AD[0..7]
U503
27256
BASIC
U502
27256
ASSEMBLY
U504
43256C-12
U506
NMC98C10
R506 10K
BASICEPROM
R503 20K
W501

Scan by Zenith



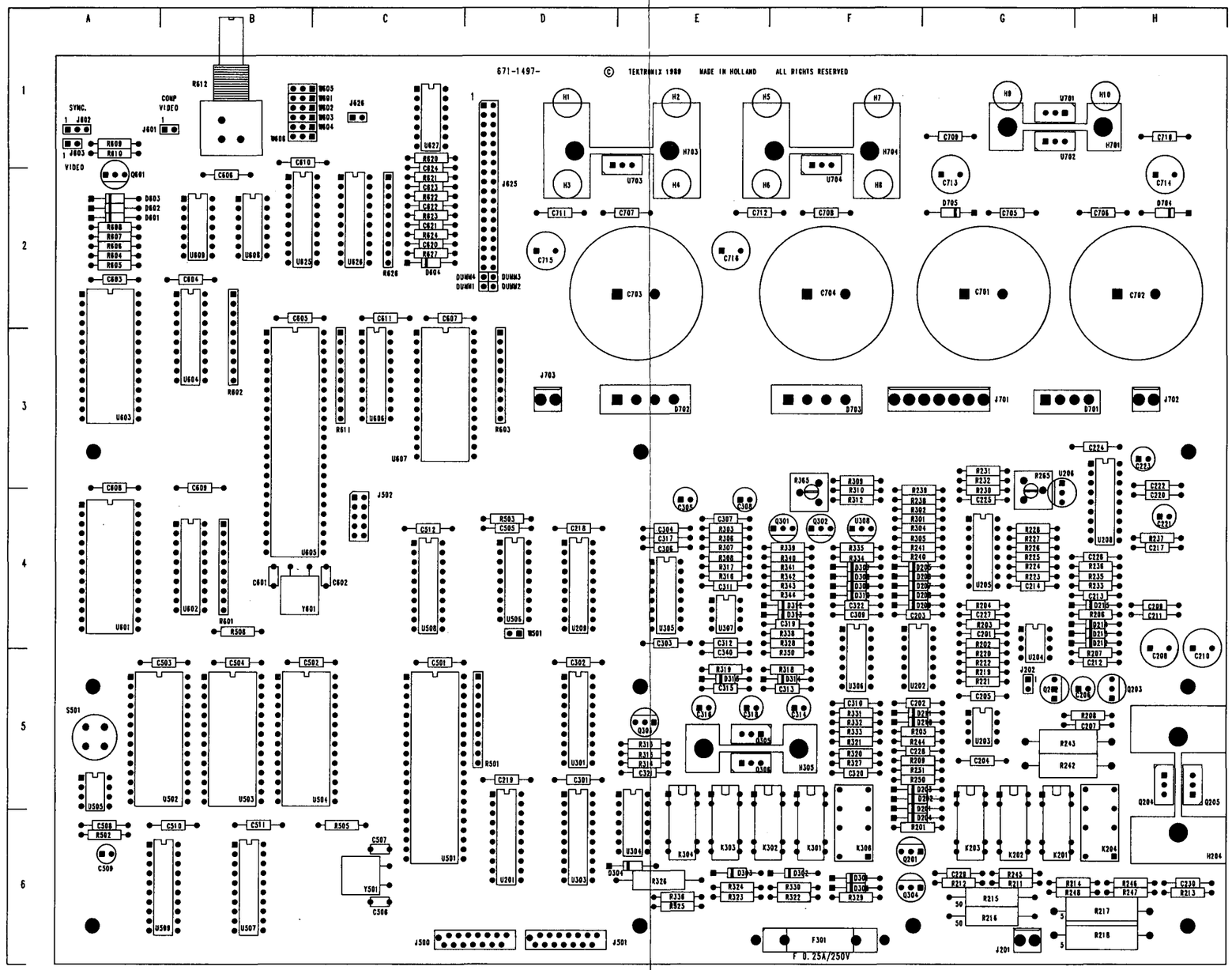


Fig. 7-2 Main Board (A11)

A11 ASSY

STATIC SENSITIVE DEVICES
SEE MAINTENANCE SECTION

COMPONENT NUMBER EXAMPLE

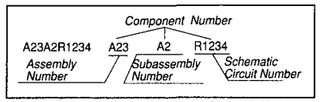


Chassis-mounted components have no Assembly Number prefix - see end of REPLACEABLE ELECTRICAL PART LIST.

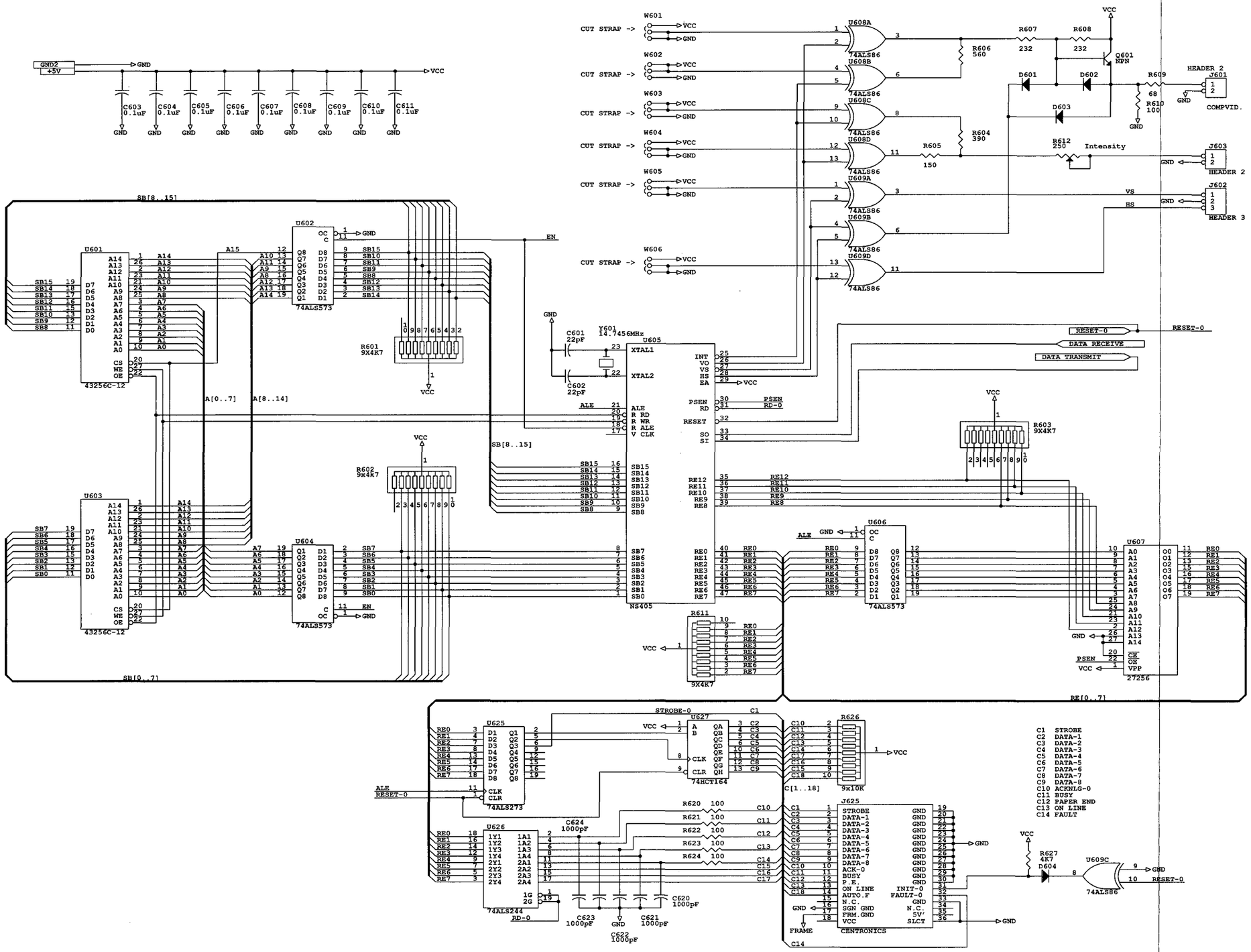
GND2
+5V
GND
VCC
C603 0.1uF
C604 0.1uF
C605 0.1uF
C606 0.1uF
C607 0.1uF
C608 0.1uF
C609 0.1uF
C610 0.1uF
C611 0.1uF
CUT STRAP ->
W601
W602
W603
W604
W605
W606
U608A
U608B
U608C
U608D
U609A
U609B
U609D
74ALS86
R606 560
R604 390
R605 150
R607 232
R608 232
Q601 NPN
D601
D602
D603
R609 68
R610 100
HEADER 2
J601
COMPVID.
R612 250
Intensity
J603
HEADER 2
J602
HEADER 3
VS
HS
SB[8..15]
U601
43256C-12
U602
74ALS573
EN
A15
A[0..7]
A[8..14]
R601 9X4K7
U603
U604
R602 9x4K7
C601 22pF
C602 22pF
Y601 14.7456MHz
U605
NS405
XTAL1
XTAL2
ALE
PSEN
RD-0
RESET
RESET-0
DATA RECEIVE
DATA TRANSMIT
R603 9X4K7
U606
74ALS573
U607
27256
RE[0..7]
R611 9X4K7
U625
74ALS273
U627
74HCT164
STROBE-0
R626 9x10K
C[1..18]
U626
74ALS244
RD-0
R620 100
R621 100
R622 100
R623 100
R624 100
C624 1000pF
C623 1000pF
C622 1000pF
C621 1000pF
C620 1000pF
J625
CENTRONICS
FRAME
C14
R627 4K7
D604
U609C
74ALS86
C1 STROBE
C2 DATA-1
C3 DATA-2
C4 DATA-3
C5 DATA-4
C6 DATA-5
C7 DATA-6
C8 DATA-7
C9 DATA-8
C10 ACKNLG-0
C11 BUSY
C12 PAPER END
C13 ON LINE
C14 FAULT

Scan by Zenith



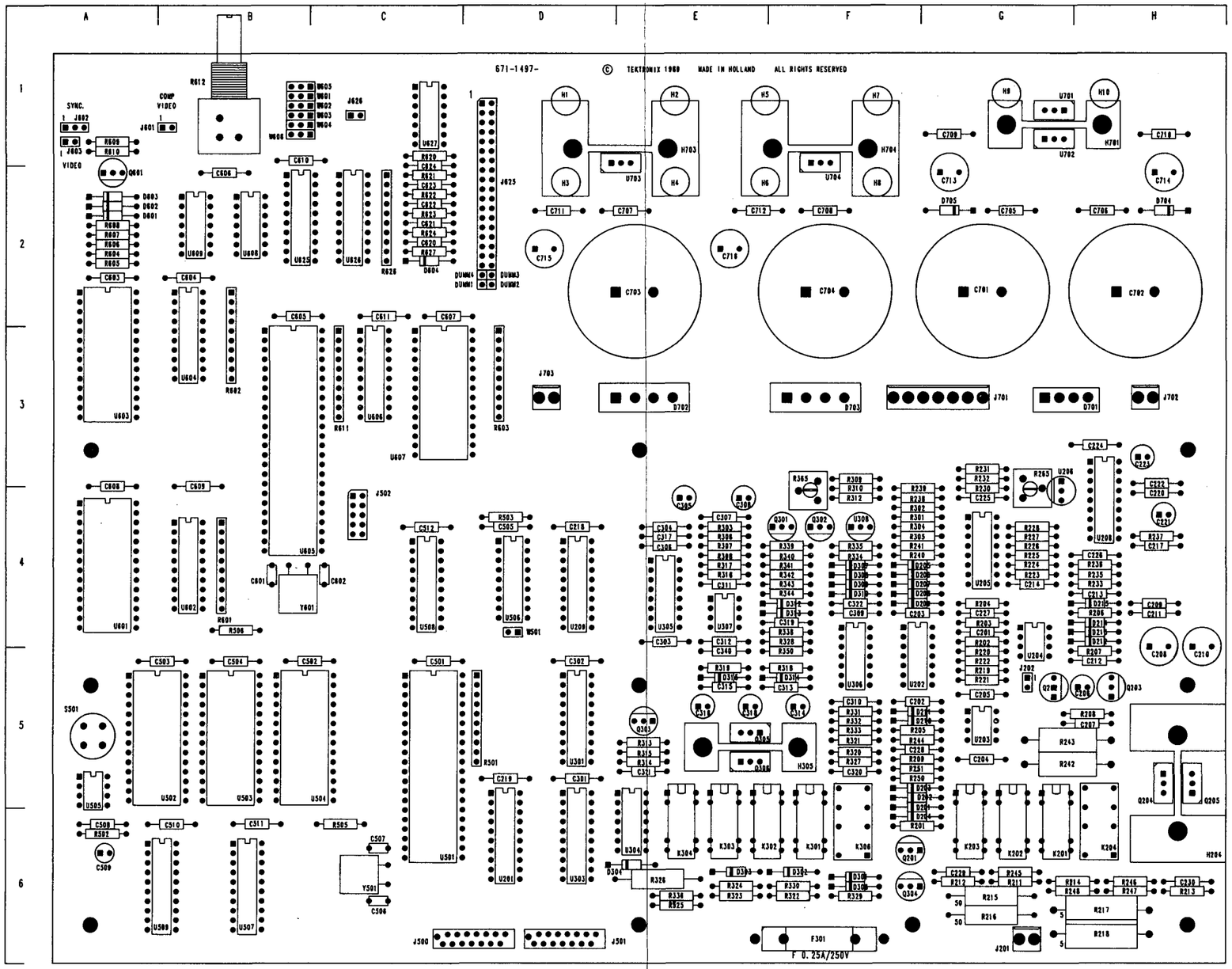


Fig. 7-2 Main Board (A11)

A11 ASSY

STATIC SENSITIVE DEVICES
SEE MAINTENANCE SECTION

COMPONENT NUMBER EXAMPLE

| Component Number | | | |
|---|---|---|---|
| A23A2R1234 | A23 | A2 | R1234 |
| Assembly Number | Subassembly Number | | Schematic Circuit Number |

Chassis-mounted components have no Assembly Number prefix - see end of REPLACEABLE ELECTRICAL PART LIST.

Scan by Zenith



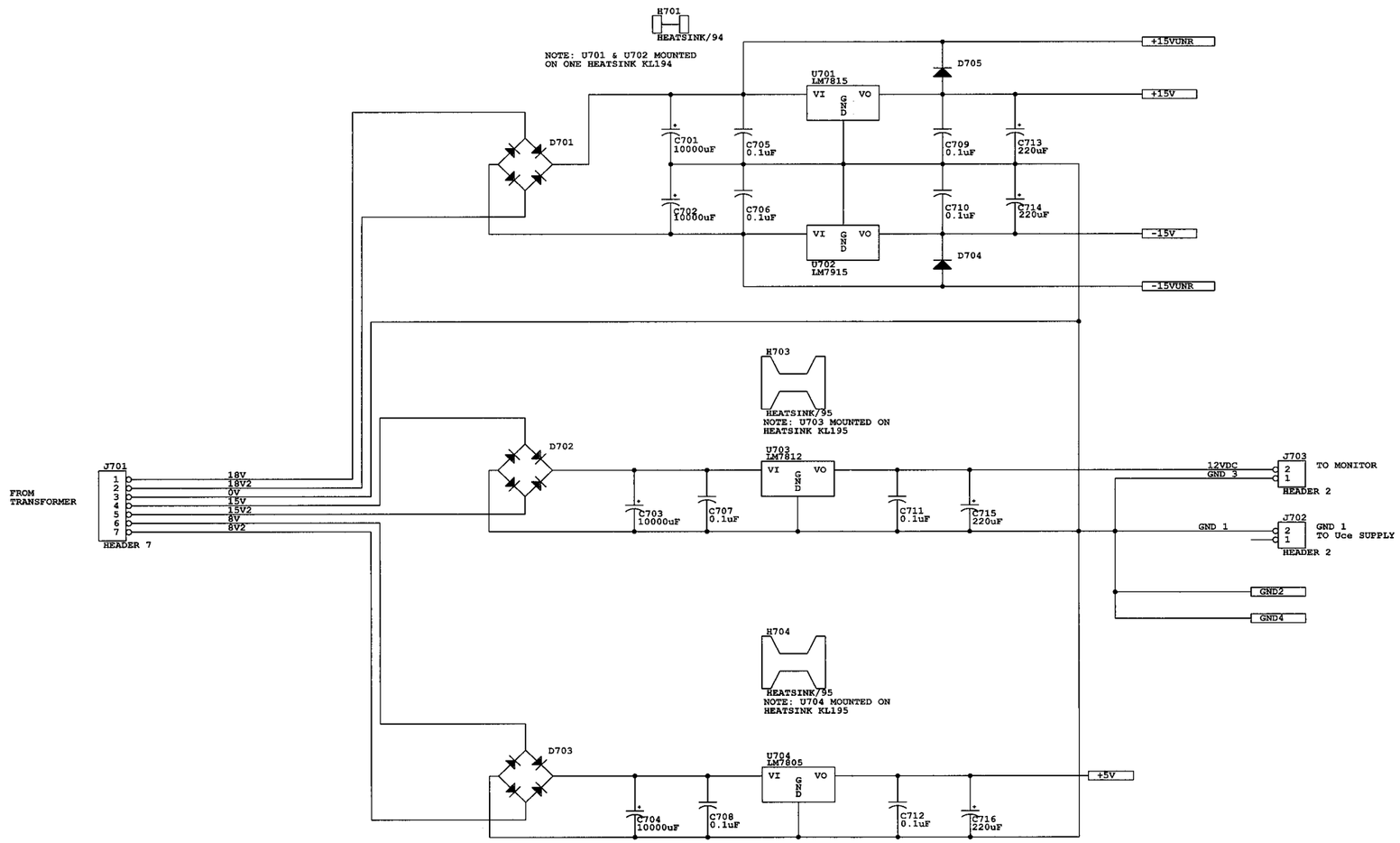

Scan by Zenith



# REPLACEABLE MECHANICAL PARTS

## PARTS ORDERING INFORMATION

Replacement parts are available from or through your local Tektronix, Inc. Field Office or representitive.

Changes to Tektronix instruments are sometimes made to accomodate improved components as they become available, and to give you the benefit of the latest circuit improvements developed in our engineering department. It is therefore important, when ordering parts, to include the following information in your order: Part number, instrument type or number, serial number, and modification number if applicable.

If a part you have ordered has been replaced with a new or improved part, your local Tektronix, Inc. Field Office or representitive will contact you concerning any change in part number .

Change information, if any, is located at the rear of this manual.

## ITEM NAME

In the Parts List, an Item Name is separated from the description by a colon(:). Because of space limitations, an Item Name may sometimes appear as incomplete. For further Item Name identification, the U.S. Federal Cataloging Handbook H6-1 can be utilized where possible.

## FIGURE AND INDEX NUMBERS

Items in this section are referenced by figure and index numbers to the illustrations.

## INDENTATION SYSTEM

This mechanical part list is intended to indicate item relationships. Following is an example of the indentation system used in the description column.

*1 2 3 4 5 Name & Description*

*Assembly and/or Component*
*Attaching parts for Assembly and/or Component*

*END ATTACHING PARTS*

*Detail Part of Assembly and/or Component*
*Attaching parts for Detail Part*

*END ATTACHING PARTS*

*Parts or Detail Part*
*Attaching parts for Parts of Detail Part*

*END ATTACHING PARTS*

Attaching Parts always appear in the same indentation as the item it mounts, while the detail parts are indented to the right. Indented items are part of, and included with, the next higher indentation.

**Attaching parts must be purchased seperately, unless otherwhise specified.**

## ABBREVIATIONS

Abbreviations conform to American National Standards Institute Y1.1

Scan by Zenith



## CROSS INDEX - MFR. CODE NUMBER TO MANUFACTURER

| Mfr. Code | Manufacturer | address | City, State, Zip Code |
|---|---|---|---|
| 80009 | TEKTRONIX INC | 14150 SW KARL BRAUN DR<br>PO BOX 500 | BEAVERTON OR 97077-0001 |

Scan by Zenith



| Fig. & Index No. | Tektronix Part No. | Serial/Assembly No. Effective Dscont | Qty | 1 2 3 4 5 Name & Description | Mfr. Code | Mfr. Part No. |
|---|---|---|---|---|---|---|
| 1-1 | 386-6033-00 | | 1 | SUB PANEL | 80009 | 386-6033-00 |
| 1-2 | 334-7785-00 | | 1 | . OVERLAY KEYS | 80009 | 334-7785-00 |
| 1-3 | 334-7817-00 | | 1 | . OVERLAY TEST SOCKETS | 80009 | 334-7815-00 |
| 1-4 | 334-7828-00 | | 1 | . OVERLAY LOGO 571 | 80009 | 334-7828-00 |
| 1-5 | 131 4976-00 | | 3 | . JACK, TIP | 80009 | 131-4976-00 |
| | | | | (END ATTACHING PARTS) | | |
| 1-6 | 671-1496-00 | | 1 | CKT BD ASSY | 80009 | 671-1496-00 |
| 1-7 | 214-4319-00 | | 2 | . SPRING 3.6X20 MM | 80009 | 214-4319-00 |
| 1-8 | 211-0313-00 | | 6 | . SCREW 4- 40X0.5 | 80009 | 211-0313-00 |
| 1-9 | 210-0940-00 | | 3 | . WASHER, 0.25 ID X 0.375 OD X 0.02 | 80009 | 210-0940-00 |
| 1-10 | 210-0046-00 | | 3 | . WASHER, LOCK 0.261ID X0.018 OD | 80009 | 210-0046-00 |
| | | | | (END ATTACHING PARTS) | | |
| 1-11 | 016-1043-00 | | 1 | COVER, PROTECTION | 80009 | 016-1043-00 |
| 1-12 | 407-3917-00 | | 1 | . BRACKET, SWITCH | 80009 | 407-3917-00 |
| 1-13 | 210-0406-00 | | 1 | . NUT 4-40 X 0.188 | 80009 | 210-0406-00 |
| 1-14 | 211-0036-00 | | 1 | . SCREW 4.40 X 0.5 | 80009 | 211-0036-00 |
| | | | | (END ATTACHING PARTS) | | |
| 1-15 | 348-1174-00 | | 2 | FOOT, CABINET | 80009 | 348-1174-00 |
| 1-16 | 348-1175-00 | | 2 | FOOT, CABINET | 80009 | 348-1175-00 |
| 1-17 | 210-0006-00 | | 4 | . WASHER, LOCK | 80009 | 210-0006-00 |
| 1-18 | 211-0510-00 | | 4 | . SCREW 6-32 X 0.375 | 80009 | 211-0510-00 |
| | | | | (END ATTACHING PARTS) | | |
| 1-19 | 437-0408-00 | | 1 | CABINET 571 | 80009 | 437-0408-00 |
| 1-20 | 351-0875-00 | | 3 | . GUIDE 3INCH | 80009 | 351-0875-00 |
| 1-21 | 260-2541-00 | | 1 | . SLIDE SWITCH | 80009 | 260-2541-00 |
| 1-22 | 213-0869-00 | | 2 | . SCREW 2-28 X 0.25 PL | 80009 | 213-0869-00 |
| 1-23 | 210-0202-00 | | 2 | . TERMINAL, LUG 0.146 ID | 80009 | 210-0202-00 |
| 1-24 | 210-0457-00 | | 2 | . NUT PL 6-32 X 0.312 | 80009 | 2100457-00 |
| 1-25 | 174-2054-00 | | 1 | . CABLE ASSY | 80009 | 174-2054-00 |
| 1-26 | 214-2476-00 | | 1 | . BAIL LOCK | 80009 | 214-2476-00 |
| 1-27 | 211-0014-00 | | 2 | . SCREW 4-40 X 0.5 | 80009 | 211-0014-00 |
| 1-28 | 276-0830-00 | | 2 | . TORROID 3.18 X 1.12 X 0.75 MM | 80009 | 276-0830-00 |
| 1-29 | | | | | | |
| 1-30 | 119-3795-00 | | 1 | . MONITOR, DISPLAY | 80009 | 119-3795-00 |
| 1-31 | 211-0504-00 | | 5 | . SCREW 6-32 X 0.25 | 80009 | 211-0504-00 |
| | | | | (END ATTACHING PARTS) | | |
| 1-32 | 671-1497-00 | | 1 | . MAIN CKT.BD. ASSY | 80009 | 671-1497-00 |
| 1-33 | 211-0244-00 | | 10 | . SCREW 4-40 X 0.312 | 80009 | 211-0244-00 |
| --- | 174-2074-00 | | 2 | . CABLE ASSY | 80009 | 174-2074-00 |
| --- | 198-5715-00 | | 1 | . WIRE SET | 80009 | 198-5715-00 |
| 1-34 | 120-1849-00 | | 1 | . TRAFO PWR | 80009 | 120-1849-00 |
| 1-35 | 210-0101-00 | | 1 | . LOCK WASHER | 80009 | 210-0101-00 |
| 1-36 | 213-0971-00 | | 1 | . SCREW 8M - 55MM | 80009 | 213-0971-00 |
| | | | | (END ATTACHING PARTS) | | |
| --- | 119-3795-00 | | 1 | MONITOR, DISPLAY | 80009 | 119-3795-00 |
| 1-37 | 361-1553-00 | | 4 | . CRT SPACER | 80009 | 361-1553-00 |
| 1-38 | 210-0010-00 | | 4 | . LOCK WASHER | 80009 | 210-0010-00 |
| 1-39 | 210-1481-00 | | 4 | . WASHER M5 X 12 MM | 80009 | 210-1481-00 |
| 1-40 | 213-0972-00 | | 4 | . SCREW 5M X 40 MM | 80009 | 213-0972-00 |
| | | | | (END ATTACHING PARTS) | | |
| ---- | 437-0408-00 | | 1 | CABINET 571 | 80009 | 437-0408-00 |
| 1-41 | 426-2378-00 | | 2 | . RAIL 571 | 80009 | 426-2378-00 |
| 1-42 | 212-0560-00 | | 4 | . SCREW 10-32 X 0.312 | 80009 | 212-0560-00 |
| | | | | (END ATTACHING PARTS) | | |
| --- | 386-6033-00 | | 1 | SUB PANEL | 80009 | 386-6033-00 |
| 1-43 | 211-0504-00 | | 3 | . SCREW 6-32 X 0.25 | 80009 | 211-0504-00 |
| | | | | (END ATTACHING PARTS) | | |
| 1-44 | 671-1498-00 | | 1 | COLL. SUPPLY CKT. BD. ASSY. | 80009 | 671-1498-00 |
| 1-45 | 384-1058-00 | | 1 | . EXTENSION SHAFT 8.157 L | 80009 | 384-1058-00 |
| 1-46 | 366-1512-00 | | 1 | . PUSH BUTTON | 80009 | 366-1512-00 |
| | | | | (END ATTACHING PARTS) | | |
| 1-47 | 337-3674-00 | | 1 | SHIELD COLL. SUPPLY | 80009 | 337-3674-00 |

Scan by Zenith



| Fig. & Index No. | Tektronix Part No. | Serial/Assembly No. Effective Dscont | Qty | 1 2 3 4 5 Name & Description | Mfr. Code | Mfr. Part No. |
|---|---|---|---|---|---|---|
| 1-48 | 407-3919-00 | | 1 | . ANGLE BRACKET | 80009 | 407-3919-00 |
| 1-49 | 211-0504-00 | | 2 | . SCREW 6-32 X 0.25 | 80009 | 211-0504-00 |
| 1-50 | 211-0244-00 | | 8 | . SCREW 4-40 X 0.312 | 80009 | 211-0244-00 |
| | | | | (END ATTACHING PARTS) | | |
| --- | 437-0408-00 | | 1 | CABINET 571 | 80009 | 437-0408-00 |
| 1-51 | 211-0504-00 | | 3 | . SCREW 6-32 X 0.25 | 80009 | 211-0504-00 |
| 1-52 | 211-0538-00 | | 1 | . SCREW 6-32 X 0.312 | 80009 | 211-0538-00 |
| 1-53 | 119-3808-00 | | 1 | . FILTER RF | 8009 | 119-3808-00 |
| | | | | (END ATTACHING PARTS) | | |
| 1-54 | 407-3934-00 | | 1 | CHASSIS BRACKET | 80009 | 407-3934-00 |
| 1-55 | 211-0504-00 | | 1 | . SCREW 6-32 X 0.25 | 80009 | 211-0504-00 |
| 1-56 | 211-0538-00 | | 1 | . SCREW 6-32 X 0.312 | 80009 | 211-0538-00 |
| | | | | (END ATTACHING PARTS) | | |
| 1-57 | 390-1090-00 | | 1 | CABINET TOP | 80009 | 390-1090-00 |
| 1-58 | 211-0504-00 | | 2 | . SCREW 6-32 X 0.25 | 80009 | 211-0504-00 |
| | | | | (END ATTACHING PARTS) | | |
| 1-59 | 671-1577-00 | | 1 | SOCKET CKT. BD. ASSY. | 80009 | 671-1577-00 |

Scan by Zenith

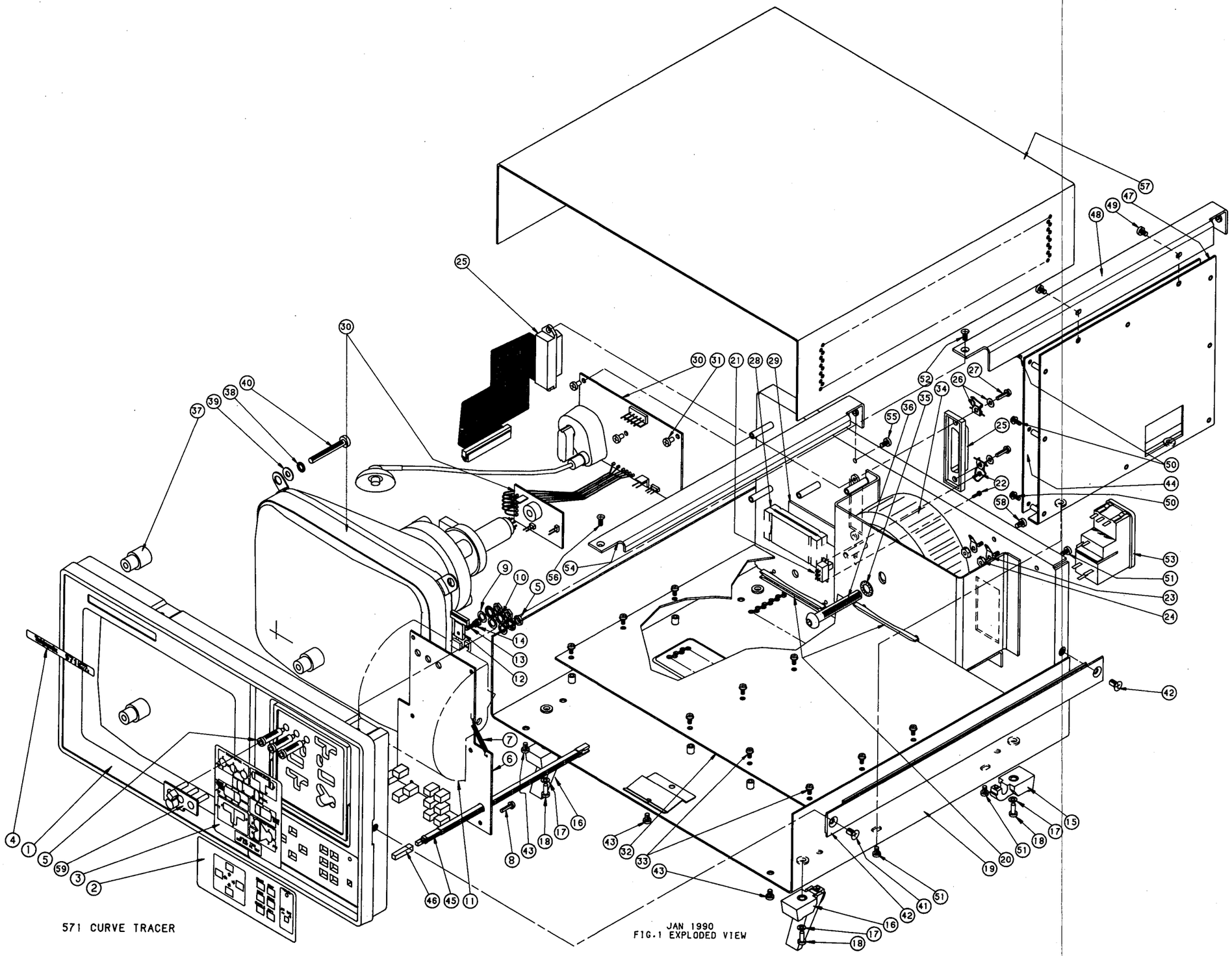


FIG. 1 EXPLODED VIEW