THIS DRAWING IS DISTRIBUTED OUTSIDE TEKTRONIX, INC. IS SUPPLIED FOR IDENTIFICATION, ENGINEERING EVALUATION, AND OR INSPECTION PURPOSES ONLY AND MAY NOT BE USED AS A BASIS FOR MANUFACTURE OF SALES OF PRODUCTS WITHOUT WRITTEN PERMISSION FROM TEKTRONIX, INC. IF THIS DRAWING IS FURNISHED UNDER ANY UNITED STATES GOVERNMENT CONTRACT, IT SHALL NOT BE EITHER DISPOSED OUTSIDE THE GOVERNMENT, OR USED, COPIED, OR DISCLOSED IN WHOLE OR IN PART FOR MANUFACTURE OR OTHERWISE, WITHOUT THE WRITTEN PERMISSION OF TEKTRONIX, INC., EXCEPT FOR EMERGENCY REPAIR OR OVERHAUL WORK BY OR FOR THE GOVERNMENT, WHERE THE ITEM OR PROCESS CONCERNED IS NOT OTHERWISE REASONABLY AVAILABLE TO ENABLE TIMELY PERFORMANCE OF THE WORK, OR IT RELEASE TO A FOREIGN GOVERNMENT AS THE INTERESTS OF THE UNITED STATES MAY REQUIRE, PROVIDED THAT IN EITHER CASE THE RELEASE, USE, DUPLICATION OR DISCLOSURE HEREOF SHALL BE SUBJECT TO THE FOREGOING LIMITATIONS. IF THIS DRAWING IS REPRODUCED IN WHOLE OR IN PART, THIS ENTIRE LEGEND BLOCK MUST APPEAR ON ALL REPRODUCED COPIES.

REV	REF	DESCRIPTION OF CHANGE	CHK BY	DATE

LIST OF MATERIALS

ITEM	SHEET	PART NUMBER/QTY.	DESCRIPTION
1	1	333-463-00	FRONT PANEL (BLANK)
2	1	386-2402-00	SUBPANEL (MOLDED BLANK)
3	1	200-1273-00	COVER, SUBPANEL (BLANK)
4	—	366-1422-00	KNOB, LATCH
5	—	214-1513-00	LATCH, PLUG-IN RETAIN.
6	—	213-0254-00	SCREW, LATCH RETAIN
7	—	426-0724-00	FRAME SEC (BOTTOM)
8	—	426-0725-00	FRAME SEC (TOP)
9	—	213-0229-00(4)	SCREW, PNL RETAIN
10	—	E-5541-XC	ECB
11	—	213-0146-00(4)	SCREW, ECB MTG
12	—	337-1399-00(2)	SHIELD (L & R)

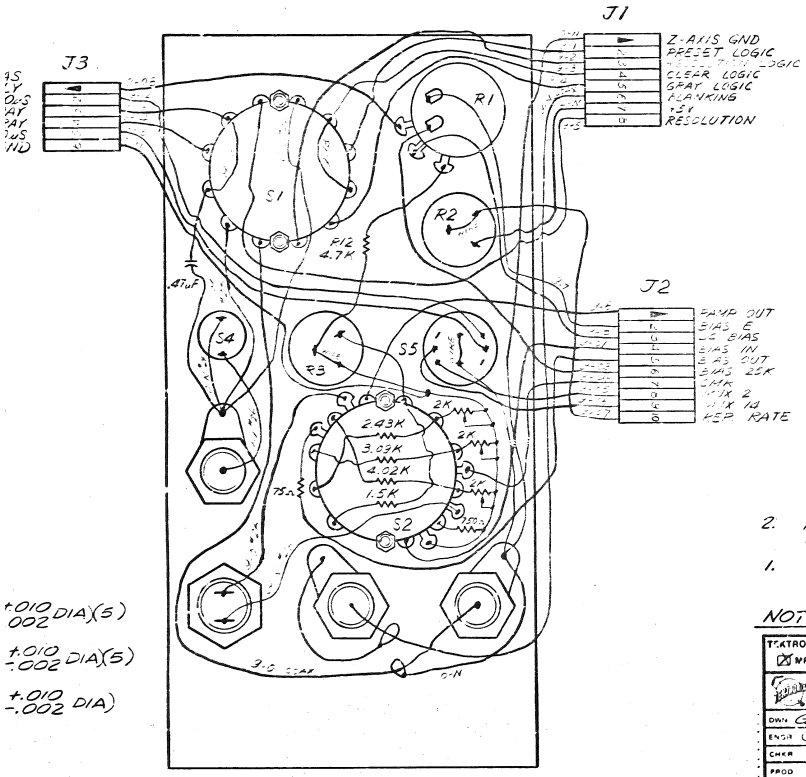

FRONT PANEL WIRING (BACK VIEW)

PART NUMBER	REV.
067-0838-99	

NOV 30 '77 REP

NOTES:

2. HARDWARE FOR PANEL COMPONENTS NOT LISTED
1. MODULE REQUIRES TM-501 OR LARGER POWER SUPPLY

TEKTRONIX, INC. PROPRIETARY ITEM DRAWING

☒ MFD BY TEKTRONIX ☐ MFD FOR TEKTRONIX

TEKTRONIX, INC. P O BOX 500 BEAVERTON OREGON U S A 97077

DWN GELLATLY	19APR77	DIMENSIONS ARE IN INCHES MM TOLERANCES UNLESS OTHERWISE SPECIFIED	
ENGR GELLATLY	29NOV77	DEC	ANGLE
CHKR		SCALE 1:1	FIRST USED FOR 4633
PROD			

MATERIAL SEE LIST

FINISH ——

TITLE CALIBRATION FIXTURE (LEVEL ADJ., GRAYSCALE, RESOLUTION & BLANKING)

CODE IDENT NO	SIZE	PART NUMBER	REV
80009	D	067-0838-99	

015380 SH 1 OF 6

6 7 8 9 10 11 12 13 14 15 16 17 18 19 20

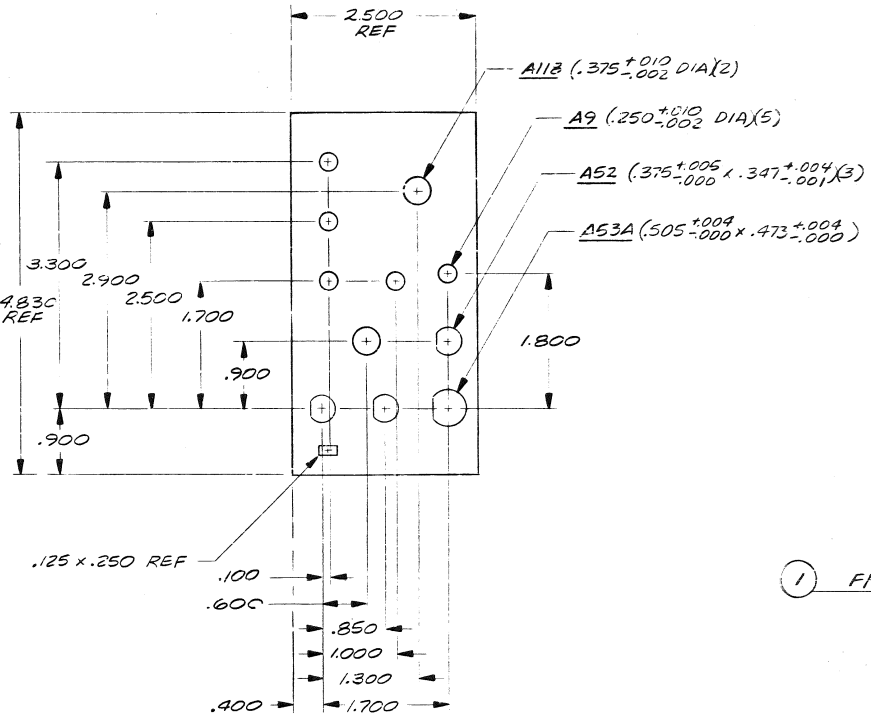

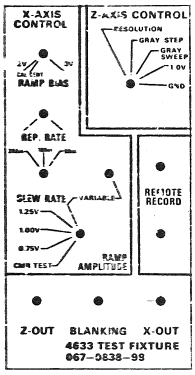

1 FRONT PANEL, SCREENED
MARKING TO BE 100% BLACK

1 FRONT PANEL
MAT'L: 333-1483-00

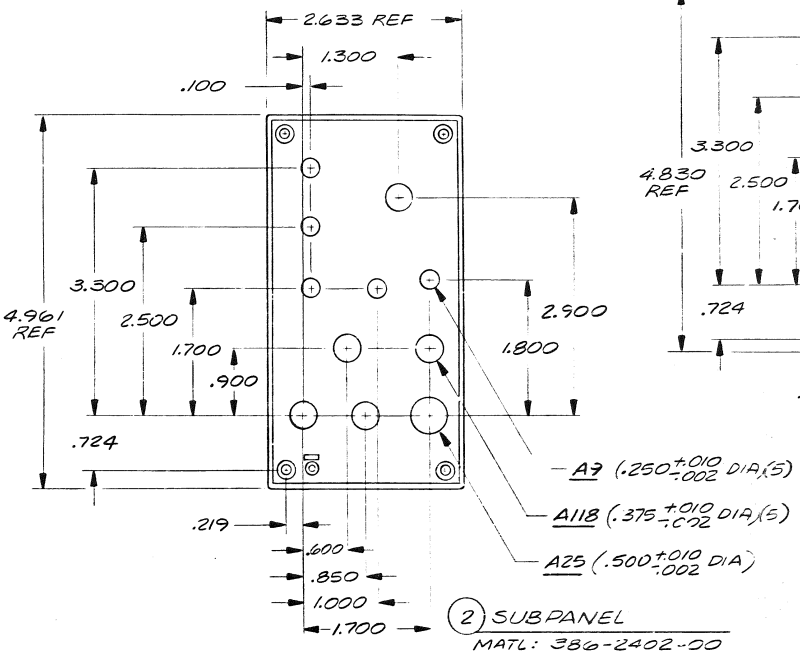

2 SUBPANEL
MATL: 386-2402-00

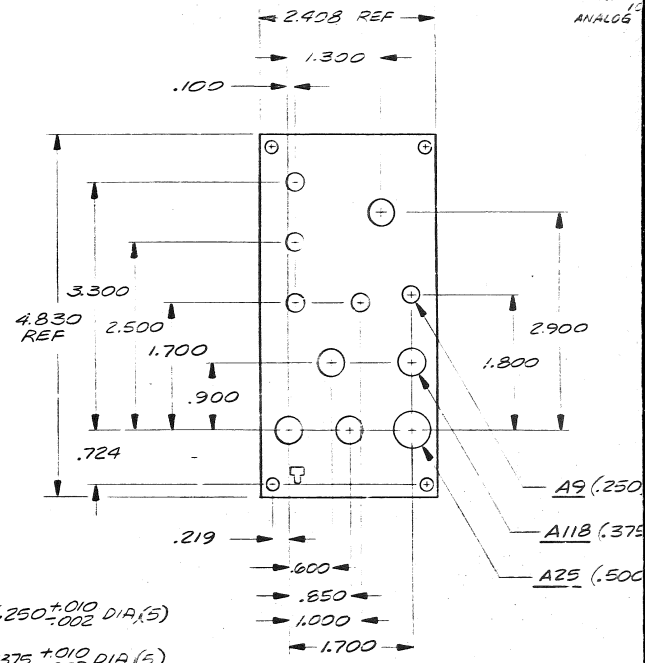

3 COVER, SUBPANEL (BACK)
MATL: 200-1273-00

BRUNING DIVISION A-M CORP.

19 18 17 16 15 14 13 12 11 10 9 8 7 6

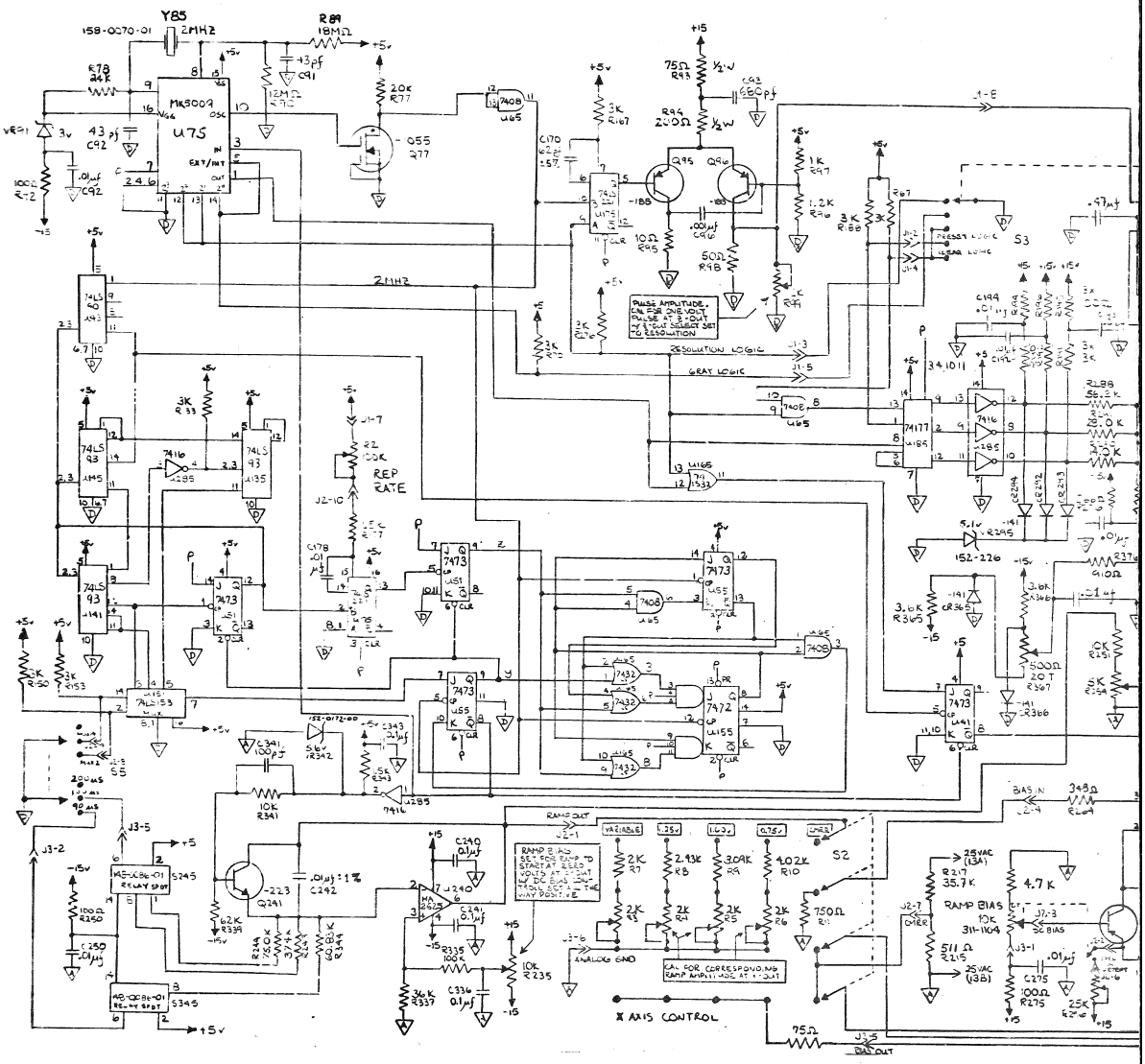

18 17 16 15 14 13 12 11 10 9 8 7 6

THIS DRAWING WHEN DISTRIBUTED BY TEKTRONIX, INC., IS SUPPLIED FOR IDENTIFICATION, ENGINEERING EVALUATION AND OR INSPECTION PURPOSES ONLY AND MAY NOT BE USED FOR MANUFACTURE OF SUPPLIES OR PRODUCTS WITHOUT WRITTEN PERMISSION FROM TEKTRONIX, INC. IF THIS DRAWING IS FURNISHED UNDER AN UNITED STATES GOVERNMENT CONTRACT, IT SHALL NOT BE OTHERWISE RELEASED OUTSIDE THE GOVERNMENT, OR USED, DUPLICATED OR DISCLOSED IN WHOLE OR IN PART FOR MANUFACTURE OR PROCUREMENT, WITHOUT THE WRITTEN PERMISSION OF TEKTRONIX, INC., EXCEPT FOR: (1) EMERGENCY REPAIR OR OVERHAUL WORK BY OR FOR THE GOVERNMENT, WHERE THE ITEM OR PROCESS CONCERNED IS NOT OTHERWISE REASONABLY AVAILABLE TO ENABLE TIMELY PERFORMANCE OF THE WORK, OR (2) RELEASE TO A FOREIGN GOVERNMENT AT THE INTERESTS OF THE UNITED STATES WHERE REQUIRED, PROVIDED THAT IN EITHER CASE THE RELEASE, USE, DUPLICATION OR DISCLOSURE HEREOF SHALL BE SUBJECT TO THE FOREGOING LIMITATIONS. THIS DRAWING IS REPRODUCED IN WHOLE OR IN PART, THIS ENTIRE LEGEND BLOCK MUST APPEAR ON ALL REPRODUCED COPIES.

REV		DESCRIPTION OF CHANGE	CHK BY	DATE

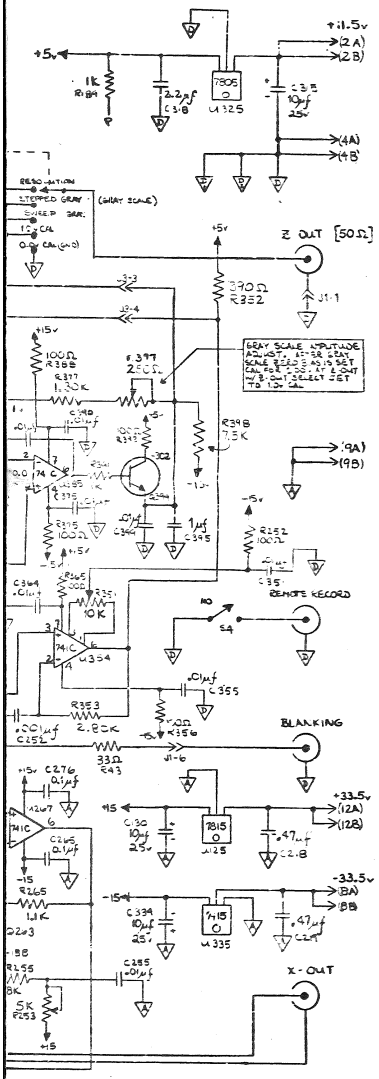

PART NUMBER	REV.
067-0838-99	

1. IF A RE-LAYOUT OF THIS BOARD IS EVER EFFECTED, AN INITIALIZATION CIRCUIT SHOULD BE ADDED AS FOLLOWS:

NOV 30 '77 REF

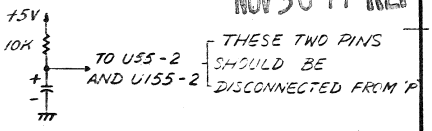

THIS SHOULD SOLVE A POTENTIAL PROBLEM OF COMPONTENT SENSITIVITY FOR U55. SOME CHIPS MAY CAUSE THE CIRCUIT TO HANG UP.

NOTES: U55

TEKTRONIX, INC. PROPRIETARY ITEM DRAWING

☐ MFD BY TEKTRONIX ☐ MFD FOR TEKTRONIX

TEKTRONIX, INC. P.O. BOX 500 BEAVERTON, OREGON U.S.A. 97077

DRN	E. REN	5-20-77	DIMENSIONS ARE IN INCHES · MM TOLERANCES UNLESS OTHERWISE SPECIFIED
ENGR	GELLATLY	23-NOV-77	DEC — ANLR —
CHKR			SCALE NONE / FIRST USED ON FOP 4633
PROD			

MATERIAL —

FINISH —

TITLE CALIBRATION FIXTURE (SCHEMATIC)

CODE IDENT NO	SIZE	PART NUMBER	REV
80009	D	067-0838-99	

SH 2 OF 6

6 7 8 9 10 11 12 13 14 15 16 17 18 19 20 21 22

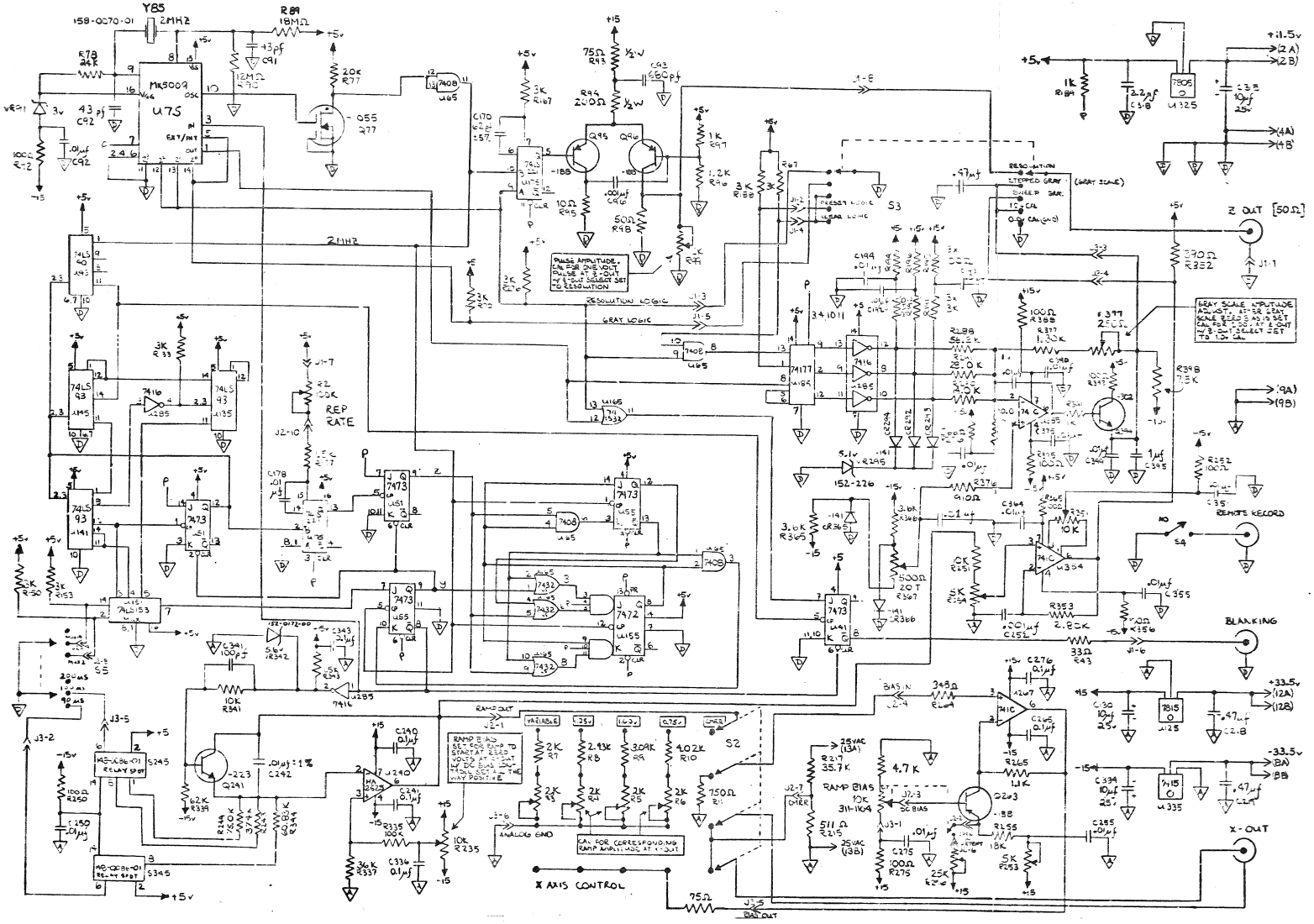
Y85
158-0270-01
2MHZ
R89
18MΩ
MK5009
U75
Q55
277
Q95
Q96
PHASE AMPLITUDE
RESOLUTION LOGIC
GRAY LOGIC
REP RATE
RESOLUTION
STEPPED GRAY (GRAY SCALE)
SWEEP SAW
CAL
CAL (GRAY)
S3
Z OUT [50Ω]
GRAY SCALE AMPLITUDE
REMOTE RECORD
S4
BLANKING
X-OUT
X AXIS CONTROL
RAMP BIAS
SC BIAS
ANALOG GND
RAMP OUT
BIAS OUT
S2
S5
S245
S345
+1.5v
(2A)
(2B)
(4A)
(4B)
(9A)
(9B)
+33.5v
(12A)
(12B)
-33.5v
(8A)
(8B)

LIST OF MATERIALS FOR CIRCUIT BOARD ASSY:

NEW ITEM	or 1-3	PART NUMBER	TOTAL QUANT	QTY PER	DESCRIPTION	CIRCUIT #
		131-0508-00		24	Sq. pins	
		136-0260-02		03	Socket, 16 pin	U75-151-175
		136-0269-02		12	Socket, 16 pin	U41-45-51-55-65-135-141
						145-155-165-185-285
		136-0516-00		02	Socket, 8 pin	U354-355 (orig U267)
		148-0086-01		02	Relay	K245-345
		151-0183-00		03	Trans.	Q95-96-263
		151-0223-00		01		Q241
		151-0302-00		01		Q394
		151-1055-00		01		Q76
		152-0141-02		05	Diode	CR292-293-294-34[illegible]-366
		152-0175-00		01		VR342
		152-0226-00		01		VR295
		152-0278-00		01		VR91
		156-0038-00		01	I.C. 7472	U155
		156-0039-00		03	7475	U41-51-55
		156-0067-00		03	7416	U267-354-385
		156-0093-00		01	7416	U285
		156-0129-00		01	7408	U65
		156-0312-00		01	7815	U125
		156-0317-00		01	I.C. MA7625	U260
		156-0277-00		01	7805	U325
		156-0410-00		01	MK5009	U75
		156-0479-00		01	74LS32	U163
		156-0527-00		01	7915	U335
		156-0536-00		01	74177	U185
		156-0646-00		02	74LS93	U135-141
		156-0656-00		02	74LS90	U45-165
		156-0733-00		01	74LS221	U175
		156-0798-00		01	74LS153	U151
		210-0407-00		03	Nut, #6	
		210-1160-00		03	Washer	
		211-0507-00		03	Screw	
					Crystal 2 MHZ	
		214-1967-00			Heatsink	
		281-0773-00		28	Cap. .01	C92-178-192-193-194-240-
						241-250-253-263-275-276-
						277-351-353-364-374-375-
						390-399
		281-0775-00		08	.1	C43-50-53-63-140-163-334-
						343

NEW ITEM	or 1-3	PART NUMBER	TOTAL QUANT	QTY PER	DESCRIPTION	CIR
		283-0060-00		01	Cap. 100 PF	C341
		283-0067-09		02	.001 UF	C96-252
		283-0195-00		01	680 PF	C93
		283-0204-00		9[illegible]	.01 UF	C29[illegible]-391
		283-0317-00		01	1 UF	C395
		283-0593-00		01	.01	C242
		283-0600-00		02	43 PF	C91-92
		283-0629-00		01	62 PF	C170
		290-0136-00		01	Cap. 2.2 UF	C318
		290-0283-00		02	.47 UF	C218-219
		290-0290-00		03	10 UF	C130-315-3[illegible]
		311-0633-00		01	Var. Res. 5 K	R254
		311-1225-00		01	1 K	R99
		311-1227-00		01	5 K	R253
		311-1228-00		02	10 K	R235-351
		311-1231-00		01	25 K	R296
		311-1168-00		01	500 Ω	R367
		311-1260-00		01	250 Ω	R397
		315-0100-00		01	Res. 100 1/4w 5%	R95
*		315-0101-00		12	100Ω	R92-194-19[illegible]
						365-375-38[illegible]
		315-0102-00		03	1 K	R97-189-3[illegible]
		315-0103-00		02	Res. 10 K 1/4w 5%	R231-341
		315-0104-00		01	100 K	R335
		315-0112-00		01	1.1 K	R265
		315-0122-00		01	1.2 K	R96
		315-0152-00		02	1.5 K	R177-343
		315-0183-00		01	18 K	R255
		315-0203-00		01	20 K	R77
		315-0243-00		01	24 K	R78
		315-0272-00		01	2.7 K	R353
		315-0302-00		11	3 K	67-70-133-
						176-188-1[illegible]
		315-0330-00		01	33 Ω	R43
		315-0362-00		02	3.6 K	R365-366
		315-0363-00		01	36 K	R337
		315-0391-00		01	390 Ω	R352
		315-0510-00		01	51 Ω	R98
		315-0623-00		01	62 K	R339
		315-0752-00		01	7.5 K	R398
		315-0912-00		03	910 Ω	R376
		316-0126-00		01	Res. 12 M 1/8w 10%	R90
		316-0186-00		01	18 M	R89
		321-0149-00		01	Res. 348[illegible] 1/8w 1%	R264
		321-0165-00		01	511 Ω	R215
		321-0187-00		01	866 Ω	R276

RRUNING 44-131 32290

19 18 17 16 15 14 13 12 11 10 9 8 7 6

THIS DRAWING [illegible] OUTSIDE TEKTRONIX, INC., IS SUPPLIED FOR IDENTIFICATION, ENGINEERING EVALUATION AND OR INSPECTION PURPOSES ONLY AND MAY NOT BE USED AS A BASIS FOR MANUFACTURE OR SALES OF PRODUCTS WITHOUT WRITTEN PERMISSION FROM TEKTRONIX, INC. IF THIS DRAWING IS FURNISHED UNDER ANY UNITED STATES GOVERNMENT CONTRACT, IT SHALL NOT BE EITHER REFERRED OUTSIDE THE GOVERNMENT OR USED, [illegible] OR DISCLOSED IN WHOLE OR IN PART FOR ANY MANUFACTURE OR PROCUREMENT WITHOUT THE WRITTEN PERMISSION OF TEKTRONIX, INC., EXCEPT FOR: (1) EMERGENCY REPAIR OR OVERHAUL WORK BY OR FOR THE GOVERNMENT, WHERE THE ITEM OR PARTS CONCERNED IS NOT OTHERWISE REASONABLY AVAILABLE TO ENABLE TIMELY PERFORMANCE OF THE WORK, OR (2) RELEASE TO A FOREIGN GOVERNMENT AS THE INTERESTS OF THE UNITED STATES MAY REQUIRE, PROVIDED THAT IN EITHER CASE THE RULE, USE, DUPLICATION OR DISCLOSURE HEREOF SHALL BE SUBJECT TO THE FOREGOING LIMITATIONS. IF THIS DRAWING IS REPRODUCED IN WHOLE OR IN PART, THIS ENTIRE LEGEND BLOCK MUST APPEAR ON ALL REPRODUCED COPIES.

REV	REF	DESCRIPTION OF CHANGE	CHK BY	DATE

REV ITEM	QT 1-5	PART NUMBER	TOTAL QUANT	QTY PER	DESCRIPTION	CIRCUIT #
		321-0204-00		01	Res. 1.30 K 1/8w 1%	R377
		321-0301-00		01	14.00 K	R290
		321-0318-00		01	20.00 K	R378
		321-0332-00		01	28.00 K	R291
		321-0342-00		01	35.70 K	R217
		321-0346-00		01	37.40 K	R243
		321-0161-00		01	56.20 K	R288
		321-0373-00		01	75.00 K	R244
		321-0682-00		01	60.83 K	R344
		323-0085-00		01	Res. 75 Ω 1/2w 1%	R93
		323-0126-00		01	200 Ω	R94
					E.C.B.	E5541-XC

CUIT #

4

-230-252-275-

-392-364-196

150-153-167-

0-191-192

PART NUMBER	REV.
067-0838-99	

NOV 30 '77 REP

TEKTRONIX, INC. PROPRIETARY ITEM DRAWING

☐ MFD BY TEKTRONIX ☐ MFD FOR TEKTRONIX

TEKTRONIX, INC. P O BOX 500 BEAVERTON, OREGON U S A 97077

DWN	E. TAN	10-26-77	DIMENSIONS ARE IN INCHES / MM TOLERANCES UNLESS OTHERWISE SPECIFIED
ENGR	G. ELLATLY	28NOV77	DEC — ANLR —
CHKR			SCALE NONE
PROD			FIRST USED ON FOR 4533

MATERIAL —

FINISH —

TITLE CALIBRATION FIXTURE (LIST OF MATLS FOR CIRCUIT BD ASSY)

CODE IDENT NO	SIZE	PART NUMBER	REV
80009	D	067-0838-99	

DO NOT SCALE DRAWING

SH 3 OF 6

6 7 8 9 10 11 12 13 14 15 16 17 18 19 20

LIST OF MATERIALS FOR FINAL ASSY:

NEW ITEM	or 1-3	PART NUMBER	TOTAL QUANT	QTY PER	DESCRIPTION	CIRCUIT #
		JA-E5541-XC		1	ECB	
		131-0274-00		1	BNC	
		131-0975-00		3	BNC	
		162-0025-00		1	Insulation, teflon (aprox.5")	
		176-0121-00		1	Wire (aprox. 2")	
		198-3955-00			Wire Kit	
		200-1273-00		1	Shield, electrical	
		210-0255-00		3	Solder Lug	
		210-0583-00		7	Nut	
		210-0596-00		4	Nut	
		210-0940-00		5	Washer	
		210-0978-00		2	Washer	
		213-0146-00		4	Screw 6x.313	
		213-0229-00		4	6x.375	
		213-0254-00		1	2-56x.250	
		214-1061-00		1	Spring	
		214-1513-01		1	Latch	
		214-1840-00		1	Pin latch	
		260-0247-00		1	Switch, Pushbottom	
		260-1139-00		1	Switch, Rotary	
					SP 1212	
					SP 1213	
		283-0134-00		1	Cap .47 UH	
		311-0467-00		1	100K 10%	
		311-0632-00		1	2K w/switch	
		311-1104-00		1	10K	
		311-1265-00		3	2K	
		315-0152-00		1	Res. 1.5K 1/4W 5%	
		315-0472-00		1	4.7K	
		315-0750-02		1	75 Ω	
		315-0751-00		1	750	
		321-0230-00		1	Res. 2.43K 1/8W 1%	
		321-0240-00		1	3.09K	
		321-0251-00		1	4.02K	
		333-1483-00		1	[illegible]el, Front	
		337-1399-00		2	Shield (side covers)	
		366-1028-00		2	Knob	
		366-1209-00		4	Knob	
		366-1422-01		1	Knob, Latch	

NEW ITEM	or 1-3	PART NUMBER	TOTAL QUANT	QTY PER	D
		386-2602-00		1	Sub Panel,
		426-0728-00		1	Frame sect
		484-4725-00		1	Frame sect

BRUNING 44-131 32250

19 18 17 16 15 14 13 12 11 10 9 8 7 6

THIS DRAWING DISTRIBUTED OUTSIDE TEKTRONIX, INC. IS SUPPLIED FOR IDENTIFICATION, ENGINEERING EVALUATION AND/OR INSPECTION PURPOSES ONLY AND MAY NOT BE USED AS A BASIS FOR MANUFACTURE OR SALES OF PRODUCTS WITHOUT WRITTEN PERMISSION FROM TEKTRONIX, INC. IF THIS DRAWING IS FURNISHED UNDER ANY UNITED STATES GOVERNMENT CONTRACT, IT SHALL NOT BE EITHER RELEASED OUTSIDE THE GOVERNMENT, OR USED, COPIED, OR DISCLOSED IN WHOLE OR IN PART FOR MANUFACTURE OR PROCUREMENT WITHOUT THE WRITTEN PERMISSION OF TEKTRONIX, INC., EXCEPT FOR (1) EMERGENCY REPAIR OR OVERHAUL WORK BY OR FOR THE GOVERNMENT, WHERE THE ITEM OR PROCESS CONCERNED IS NOT OTHERWISE REASONABLY AVAILABLE TO ENABLE TIMELY PERFORMANCE OF THE WORK, OR (2) RELEASE TO A FOREIGN GOVERNMENT AS THE INTERESTS OF THE UNITED STATES MAY REQUIRE, PROVIDED THAT IN EITHER CASE THE RELEASE, USE, QUALIFICATION OR DISCLOSURE HEREUNDER SHALL BE SUBJECT TO THE FOREGOING LIMITATIONS. IF THIS DRAWING IS REPRODUCED IN WHOLE OR IN PART, THIS ENTIRE LEGEND BLOCK MUST APPEAR ON ALL REPRODUCED COPIES.

REV	REF	DESCRIPTION OF CHANGE	CHK BY	DATE

DESCRIPTION	CIRCUIT #
Front	
ion, bottom	
ion, Top	

PART NUMBER	REV.
067-0838-99	

NOV 30 '77 REP

TEKTRONIX, INC. PROPRIETARY ITEM DRAWING

☐ MFD BY TEKTRONIX ☐ MFD FOR TEKTRONIX

TEKTRONIX, INC. P O BOX 500 BEAVERTON OREGON U S A 97077

DWN	E. YEN	10-20-77	DIMENSIONS ARE IN INCHES / MM TOLERANCES UNLESS OTHERWISE SPECIFIED
ENGR	GELLATLY	27 NOV 77	DEC — ANGLE —
CHKR			SCALE NONE / FIRST USED ON FOR 4633
PROD			

MATERIAL —

FINISH —

TITLE CALIBRATION FIXTURE LIST OF MATLS FOR FINAL ASSY.

CODE IDENT NO	SIZE	PART NUMBER	REV
80009	D	067-0838-99	

DO NOT SCALE DRAWING

SH 4 OF 6

6 7 8 9 10 11 12 13 14 15 16 17 18 19 20

CALIBRATION PROCEDURE :

1. Center all adjustment pots before applying power.

2. Set the oscilloscope time base to 0.5 ms/DIV, the vertical amplifier input to 200 mv/DIV. Set the trigger mode to auto, switch the vertical input to ground and center the trace. Connect the scope probe to the X-OUT connector (connect the probe ground to the outside of the connector), turn the RAMP BIAS control all the way clockwise, and set the SLEW RATE control to 200 us. Adjust R235 so that the base of the ramp is at zero volts.

3. Turn the RAMP BIAS control all the way counter-clockwise until it is locked in detent. Adjust R253 so that the ramp base is at -0.5 volts.

4. Set the oscilloscope vertical input to 500 mv/DIV. Click the RAMP BIAS control out of detent, leave it turned as far counter-clockwise as possible without going into detent. Adjust R296 so that the base of the ramp is at -2.0 Volts.

5. Switch the vertical input of the oscilloscope to ground, set the input to 200 mv/DIV, and use the vertical position adjustment to place the trace on the bottom line of the graticule. Turn the RAMP BIAS control all the way clockwise and switch the input of the scope to DC. Place the RAMP AMPLITUDE control to the 0.75V position. Adjust the trim pot mounted on the back side of the RAMP AMPLITUDE switch that is nearest the Z-OUT connector so that the amplitude of the ramp is 0.75 volts.

6. Switch the RAMP AMPLITUDE control to 1.00V and adjust the trim pot adjacent to the 0.75V adjustment for a ramp amplitude of 1.00 volts.

7. Switch the RAMP AMPLITUDE control to 1.25V and adjust the next trimmer for a ramp amplitude of 1.25 volts.

* 8. Set the RAMP AMPLITUDE control to the VARIABLE position and adjust the corresponding pot on the front panel. An amplitude variation from zero to approximately two volts should be noted in the output ramp when the VARIABLE adjustment is turned full in both directions.

* 9. Set the RAMP AMPLITUDE control to the 1.00V position, and set the oscilloscope time base for 100us/DIV. Note the duration of the ramp for the three different settings of the SLEW RATE control. The ramp time should correspond to the setting label of the SLEW RATE control (ie. 200us, 100us, 90us). Only a slight change in the amplitude of the ramp should be noted between the different slew rates (less than 50mv). Return the SLEW RATE control to the 200 us position, and the scope time base to 0.5ms/DIV.

* 10. Turn the REP. RATE control and note the variation in the ramp period. It should vary, in the full swing of the control, from less than 0.5 ms/cycle to greater than 1.0 ms/cycle.

11. Attach a 50Ω terminator to the Z-OUT connector, set the Z-AXIS CONTROL to GRAY SWEEP, connect the scope probe to the Z-OUT signal (connect the probe ground to the ground of the connector), and adjust R351 so that the base of the ramp is at zero volts. (overshoot on the falling side of the ramp is permisable)

12. Adjust R254 for a ramp amplitude of 1.00 volts.

* 13. Connect the scope probe to the BLANKING output and note that a TTL low occurs that is coincident with one of the same duration and period as, the ramp at the X-OUT output.

* 14. Turn the Z-AXIS CONTROL to RESOLUTION. Now the blanking signal should go low for five consecutive ramps at X-OUT, then stay high for five.

15. Connect the scope probe to the Z-OUT connector and, with the Z-AXIS CONTROL to RESOLUTION, set the scope time base to 0.2us/DIV. Adjust R99 so that the tops of the pulses are at 1.00 volts.

* 16. The frequency of the pulses should be 2MHZ (a period of 0.5us). This can be verified with a frequency counter. The duty cycle is approximately 25%.

17. Set the Z-AXIS CONTROL to GND. Put the positive probe of a DVM on the lead of C395 that is furthest away from the edge of the board (C395 is between R397 and U394). Put the negative DVM probe on the Z-OUT connector ground. Set the DVM to the 200mV scale and adjust R367 so that the DVM reads as close as possible to 0.0 millivolts. (adjust to within ±.5mV)

18. Set the DVM to the 2V scale, put the positive DVM probe on the Z-OUT output, and switch the Z-AXIS CONTROL to 1.0 V. Adjust R395 for 1.000 volts on the DVM. (this should also be set to within ±.5mV)

* 19. Set the Z-AXIS CONTROL to the GRAY STEP position and note the variation on the DVM from zero volts to one volt in eight discrete steps, each of one second duration. An alternate way to observe this is to set the oscilloscope time base to 1 sec/DIV, set the vertical sensitivity to 0.2V/DIV, and connect the probe to the Z-OUT connector.

* 20. Connect the scope probe to the X-OUT connector (the ground clip should go to the ground of the Z-OUT connector). Set the oscilloscope trigger to LINE and set the vertical sensitivity to 0.5V/DIV. Set the RAMP AMPLITUDE control to the CMR TEST position. A sine wave should be observed of approximately one volt peak to peak.

Return the RAMP AMPLITUDE control to the 1.00 V setting.

BRUNING 44-131 32250

THIS DRAWING IS NOT PROPRIETARY OUTSIDE TEKTRONIX, INC. IS SUPPLIED FOR IDENTIFICATION, ENGINEERING EVALUATION AND QC INSPECTION PURPOSES ONLY AND MAY NOT BE USED AS A BASIS FOR MANUFACTURE OR SALES OF PRODUCTS WITHOUT WRITTEN PERMISSION FROM TEKTRONIX, INC. IF THIS DRAWING IS FURNISHED UNDER ANY UNITED STATES GOVERNMENT CONTRACT, IT SHALL NOT BE EITHER RELEASED OUTSIDE THE GOVERNMENT, OR USED, DUPLICATED, OR DISCLOSED IN WHOLE OR IN PART FOR MANUFACTURE OR PROCUREMENT WITHOUT THE WRITTEN PERMISSION OF TEKTRONIX, INC., EXCEPT FOR (1) EMERGENCY REPAIR OR OVERHAUL WORK BY OR FOR THE GOVERNMENT, WHERE THE ITEM OR PROCESS CONCERNED IS NOT OTHERWISE REASONABLY AVAILABLE TO ENABLE TIMELY PERFORMANCE OF THE WORK, OR (2) RELEASE TO A PORTION OF GOVERNMENT AS THE INTERESTS OF THE UNITED STATES MAY REQUIRE, PROVIDED THAT, IN EITHER CASE THE RELEASE, USE, DUPLICATION OR DISCLOSURE HEREOF SHALL BE SUBJECT TO THE FORE-GOING LIMITATIONS. IF THIS DRAWING IS REPRODUCED IN WHOLE OR IN PART, THIS ENTIRE LEGEND BLOCK MUST APPEAR ON ALL REPRODUCED COPIES.

ABV	REF	DESCRIPTION OF CHANGE	CK'K BY	DATE

* 21. Set the DVM to the OHMS function. Put one probe on each side of the REMOTE RECORD connector. When the REMOTE RECORD button is pushed, the ohm meter should indicate a short. Otherwise there should be an open circuit.

* Indicates a performance check only—where no adjustment should be necessary. If the instrument does not pass one of these performance checks trouble-shooting may be needed to determine the reason.

PART NUMBER	REV.
067-0838-99	

NOV 30 '77 REP

TEKTRONIX, INC. PROPRIETARY ITEM DRAWING

☑ MFD BY TEKTRONIX ☐ MFD FOR TEKTRONIX

TEKTRONIX, INC. P O BOX 500 BEAVERTON OREGON U S A 97077

DRWN	E FEN	10-11-77	DIMENSIONS ARE IN INCHES / MM TOLERANCES UNLESS OTHERWISE SPECIFIED
ENGR	GELLATLY	29 NOV 77	DEC / ANGL
CHKR			SCALE NONE / FIRST USED ON FOR 4633
PROD			

MATERIAL —

FINISH —

TITLE CALIBRATION FIXTURE CALIBRATION PROCEDURE.

CODE IDENT NO	SIZE	PART NUMBER	REV
80009	D	067-0838-99	

DO NOT SCALE DRAWING

SH 5 OF 6

6 7 8 9 10 11 12 13 14 15 16 17 18 19 20 21

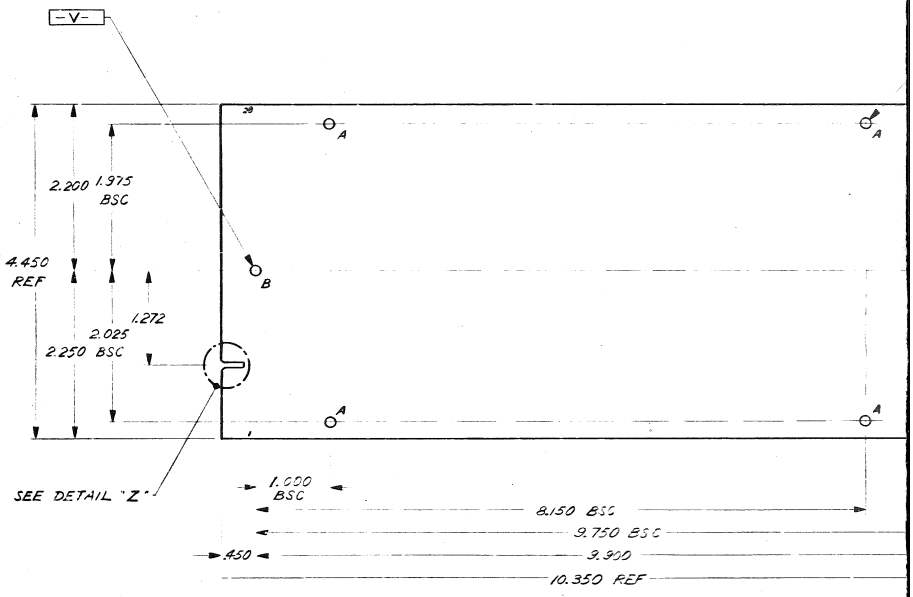

FRONT

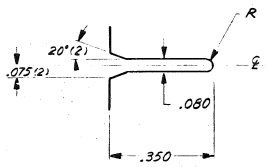

DETAIL "Z"
SCALE 4:1

BRUNING 44-131 32250

19 18 17 16 15 14 13 12 11 10 9 8 7 6

THIS DRAW[illegible] WHICH IS SUPPLIED OUTS DE TEKTRONIX INC. IS SUPPLIED FOR IDENTIFICATION, ENGINEERING EVALUATION AND OR INSPECTION PURPOSES O[illegible] MAY NOT BE USED AS A BASIS FOR MANUFACTURE OR SALES OF PRODUCTS WITHOUT WRITTEN PERMIS ON FROM TEKTRONIX INC. IF THIS DRAWING IS FURNISHED UNDER ANY UNITED STATES GOVERNMENT CONTRACT, IT SHALL NOT BE EITHER RELEASED OUTSIDE THE GOVERNMENT, OR USED, DUPLICATED, OR DISCLOSED IN WHOLE OR IN PART FOR MANUFACTURE OR PROCUREMENT, WITHOUT THE WRITTEN PERMISSION OF TEKTRONIX, INC., EXCEPT FOR: (1) EMERGENCY REPAIR OR OVERHAUL WORK BY OR FOR THE GOVERNMENT, WHERE THE ITEM OR PROCESS CONCERNED IS NOT OTHERWISE REASONABLY AVAILABLE TO ENABLE TIMELY PERFORMANCE OF THE WORK, OR (2) RELEASE TO A FOREIGN GOVERNMENT AS THE INTERESTS OF THE UNITED STATES MAY REQUIRE, PROVIDED THAT IN EITHER CASE THE RELEASE, USE, DUPLICATION OR DISCLOSURE HEREOF SHALL BE SUBJECT TO THE FOREGOING LIMITATIONS. IF THIS DRAWING IS RE-REPRODUCED IN WHOLE OR IN PART, THIS ENTIRE LEGEND BLOCK MUST APPEAR ON ALL REPRODUCED COPIES.

REV	REF	DESCRIPTION OF CHANGE	CHK BY	DATE

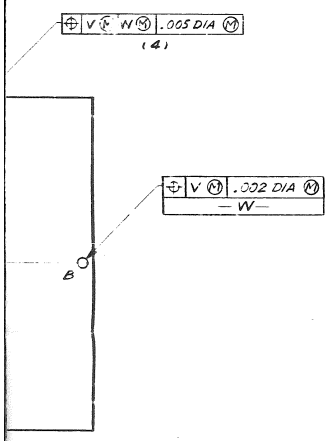

2. ALIGN DATUMS V & W WITH .050 GRID
1. FINISH HOLE DIA

PLATED		QTY
UNMARKED	.048/.058	—
'A'	.133/.143	7
OPTIONAL PLATED		
'B'	.136/.142	2

PART NUMBER	REV.
067-0838-99	

NOV 30 '77 REP

TEKTRONIX, INC. PROPRIETARY ITEM DRAWING

☑ MFD BY TEKTRONIX ☐ MFD FOR TEKTRONIX

TEKTRONIX, INC. P O BOX 500 BEAVERTON OREGON U S A 97077

DWN	E. HEN	10-26-77
ENGR	GELLATLY	29 NOV 77
CHKR		
PROD		

DIMENSIONS ARE IN INCHES / MM
TOLERANCES UNLESS OTHERWISE SPECIFIED
DEC ± .005 ANGLE ± 2°

SCALE 1:1 FIRST USED ON FSR 4633

MATERIAL 254-[illegible] & 254-[illegible]-XX
EPOXY GLASS LAMINATE & 254-0618-XX
EPOXY BOND

FINISH TEK STD 062-1727-XX &
062-1778-XX

TITLE CALIBRATION FIXTURE
ETCHED CIRCUIT BOARD

CODE IDENT NO	SIZE	PART NUMBER	REV
80009	D	067-0838-99	

DO NOT SCALE DRAWING

SH 3 OF 6

6 7 8 9 10 11 12 13 14 15 16 17 18 19 20 21

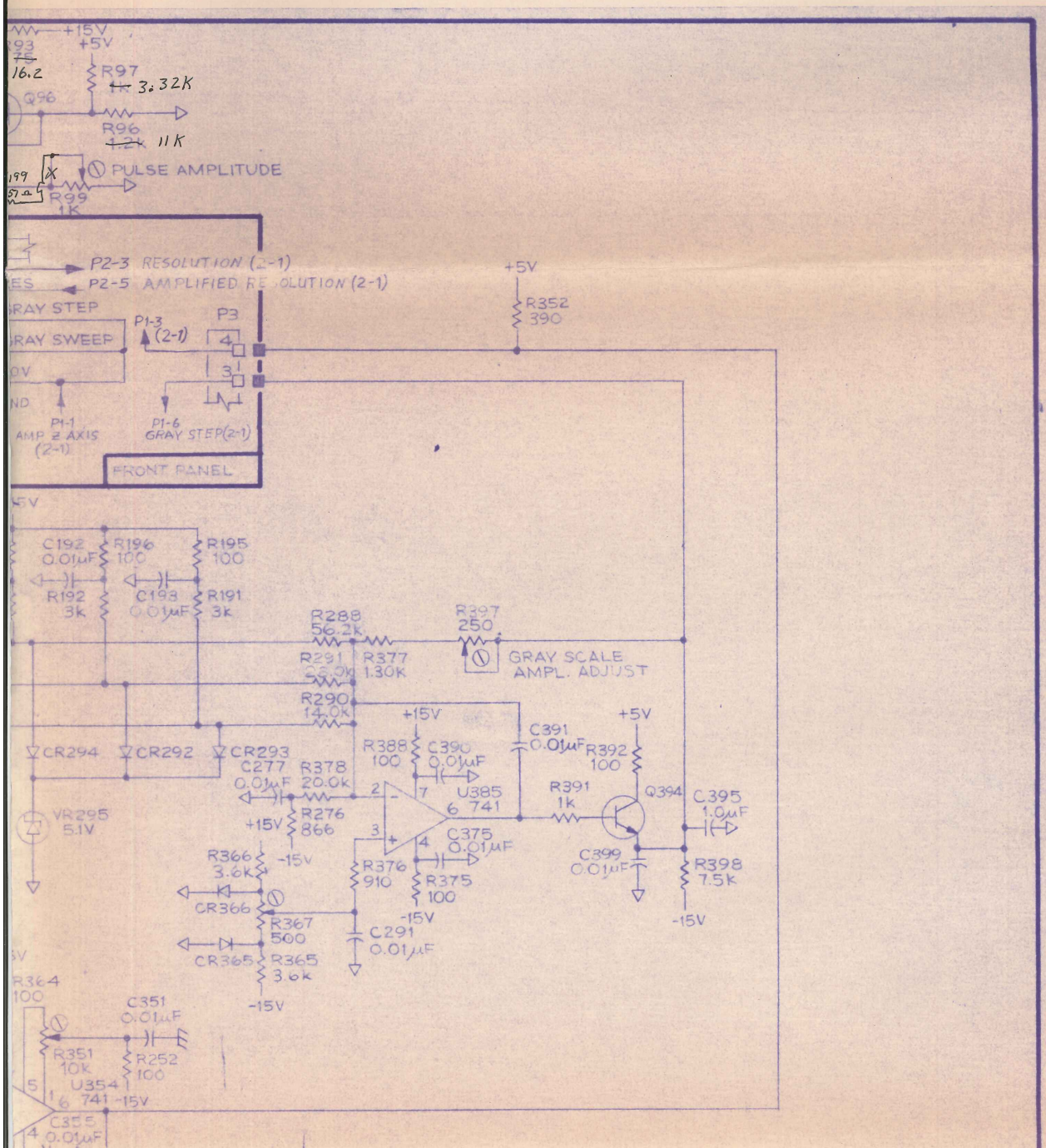
+15V
+5V
R97
3.32K
Q96
R96
11K
PULSE AMPLITUDE
R99
1K
P2-3 RESOLUTION (2-1)
P2-5 AMPLIFIED RESOLUTION (2-1)
GRAY STEP
GRAY SWEEP
P1-3 (2-1)
P3
P1-1 AMP Z AXIS (2-1)
P1-6 GRAY STEP(2-1)
FRONT PANEL
+5V
R352
390
C192 0.01μF
R196 100
R195 100
R192 3k
C193 0.01μF
R191 3k
R288 56.2k
R397 250
R291 56.2k
R377 1.30K
GRAY SCALE AMPL. ADJUST
R290 14.0k
+15V
C391 0.01μF
+5V
R388 100
C390 0.01μF
R392 100
CR294
CR292
CR293
C277 0.01μF
R378 20.0k
U385 741
R391 1k
Q394
C395 1.0μF
VR295 5.1V
+15V
R276 866
C375 0.01μF
R366 3.6k
-15V
R376 910
R375 100
C399 0.01μF
R398 7.5k
CR366
R367 500
-15V
-15V
C291 0.01μF
CR365
R365 3.6k
-15V
R364 100
C351 0.01μF
R351 10k
R252 100
U354 741
-15V
C355 0.01μF

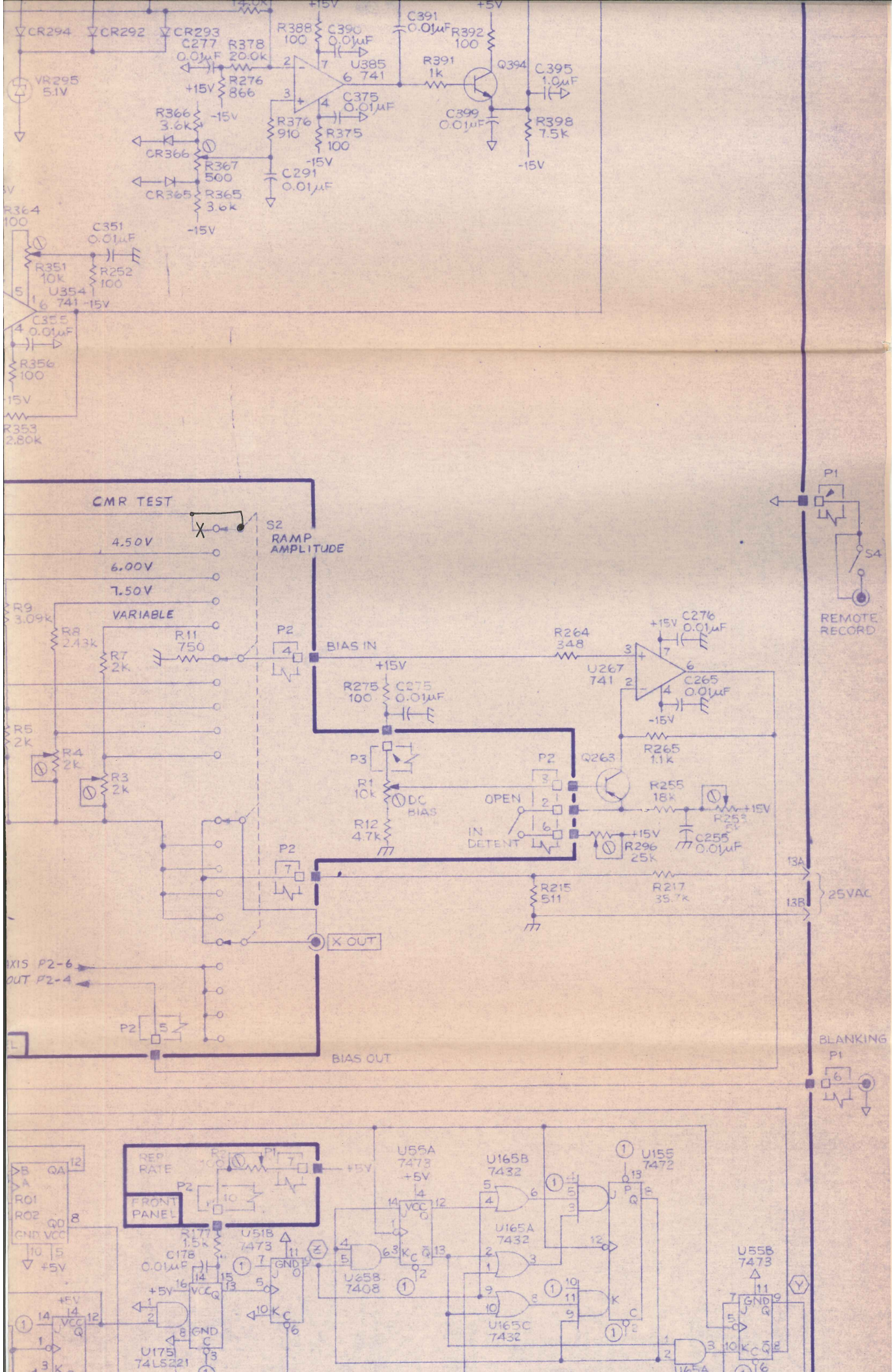
CR294
CR292
CR293
VR295
5.1V
C277
0.01µF
R378
20.0k
R276
866
R388
100
C390
0.01µF
U385
741
C391
0.01µF
R392
100
R391
1k
Q394
C395
1.0µF
C399
0.01µF
R398
7.5k
R376
910
R375
100
C375
0.01µF
C291
0.01µF
R366
3.6k
CR366
R367
500
CR365
R365
3.6k
R364
100
C351
0.01µF
R351
10k
R252
100
U354
741
C355
0.01µF
R356
100
R353
2.80k
CMR TEST
S2
RAMP
AMPLITUDE
4.50V
6.00V
7.50V
VARIABLE
R9
3.09k
R8
2.43k
R7
2k
R11
750
R5
2k
R4
2k
R3
2k
P2
BIAS IN
R264
348
C276
0.01µF
U267
741
C265
0.01µF
R275
100
C275
0.01µF
R265
1.1k
P3
R1
10k
DC
BIAS
R12
4.7k
OPEN
IN
DETENT
Q263
R255
18k
R253
5k
R296
25k
C255
0.01µF
R215
511
R217
35.7k
X OUT
BIAS OUT
P1
S4
REMOTE
RECORD
13A
13B
25VAC
BLANKING
REP
RATE
FRONT
PANEL
R177
1.5k
C178
0.01µF
U175
74LS221
U518
7473
U658
7408
U55A
7473
U165B
7432
U165A
7432
U165C
7432
U155
7472
U55B
7473
U165A

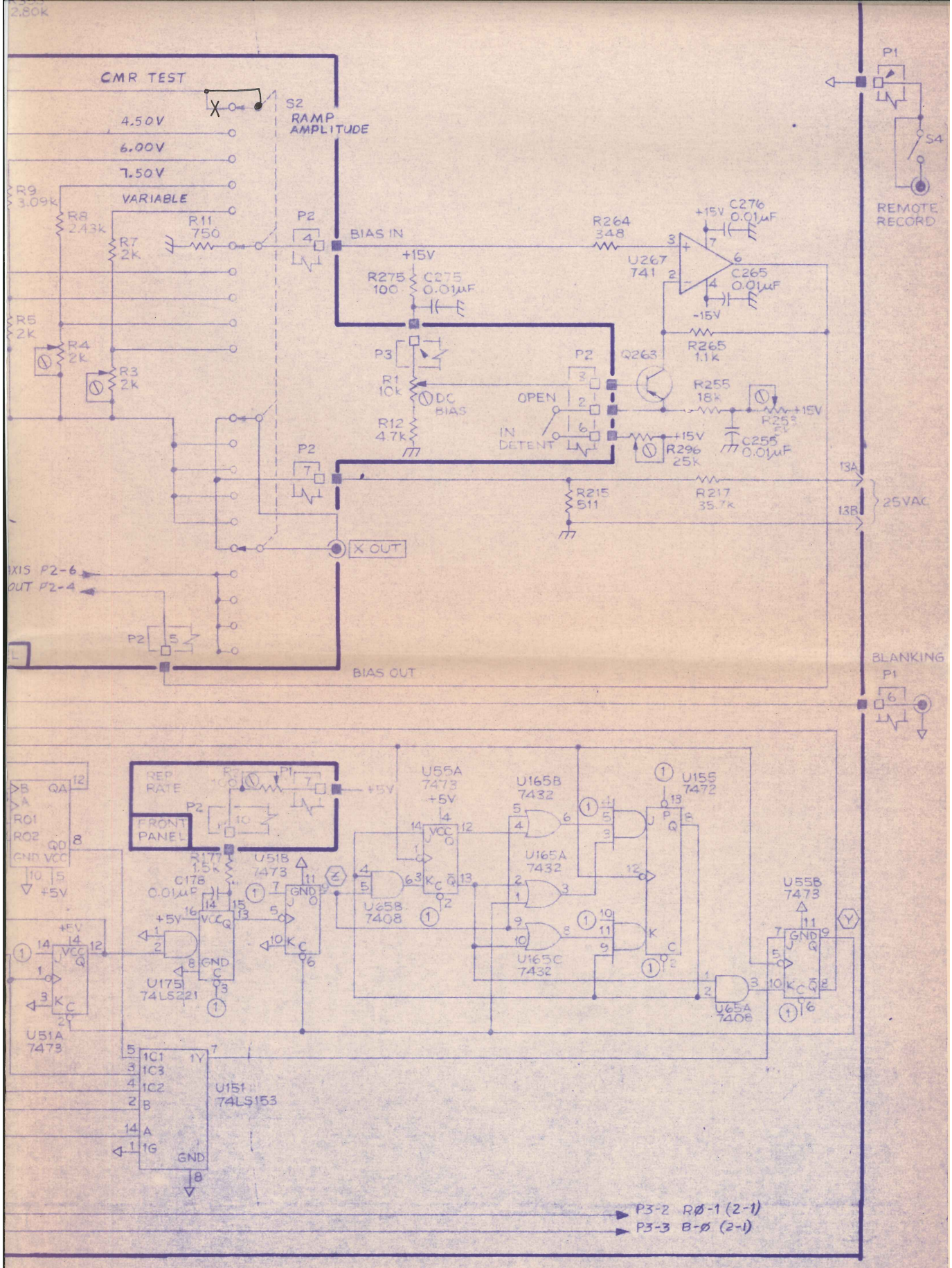

670-6949-ØØ MAINBOARD 1-1

ONIX INC. © 1978

FEB 5 1980

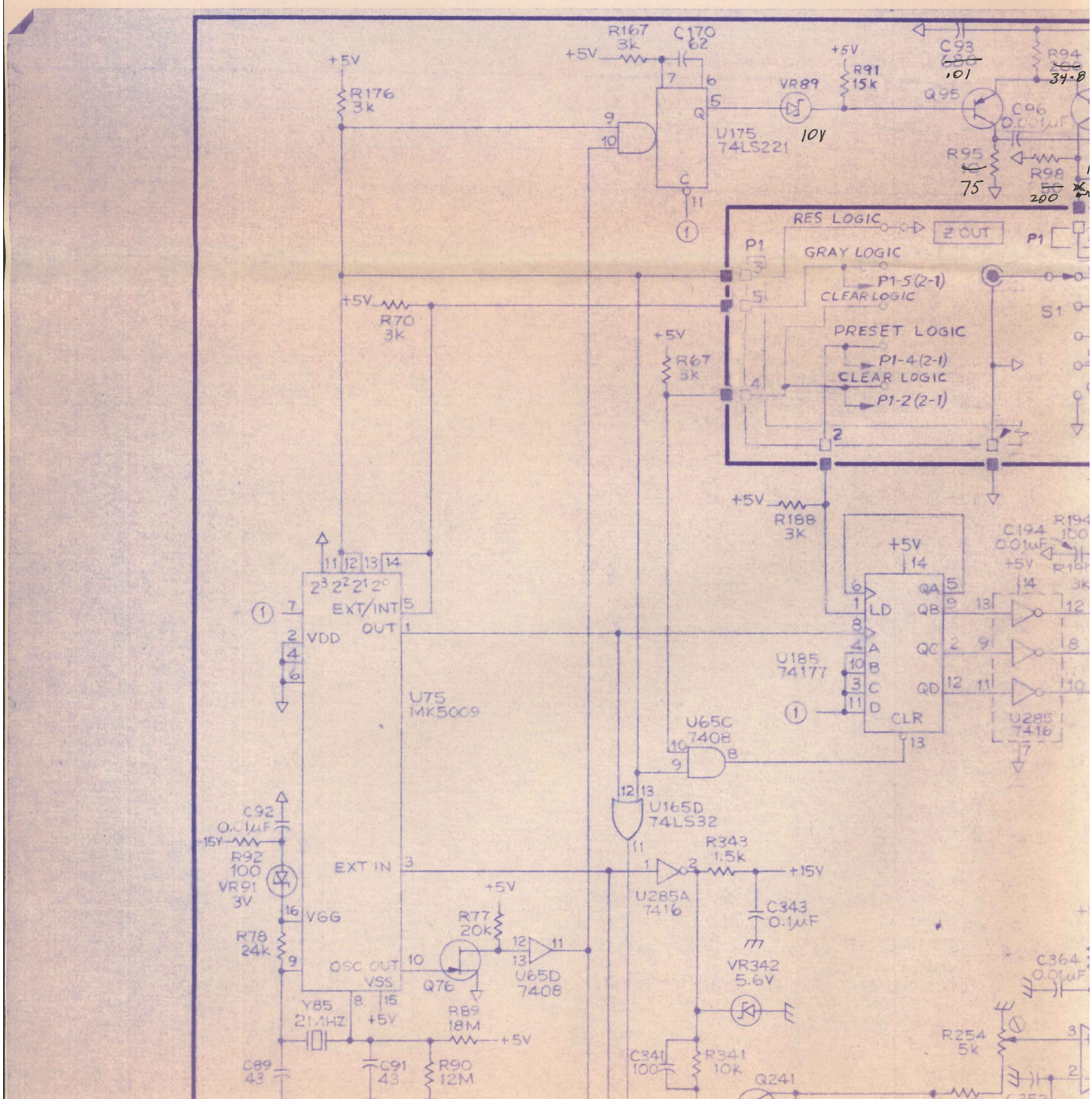
R167 3k
C170 62
+5V
R176 3k
VR89
10V
R91 15k
Q95
C93 .01
R94 34.8
C96 0.001µF
R95 75
R98 200
U175 74LS221
RES LOGIC
Z OUT
GRAY LOGIC
P1-5(2-1)
CLEAR LOGIC
PRESET LOGIC
P1-4(2-1)
CLEAR LOGIC
P1-2(2-1)
P1
S1
R70 3k
R67 3k
R188 3k
C194 0.01µF
U185 74177
LD
QA
QB
QC
QD
CLR
U285 7416
U65C 7408
U165D 74LS32
U75 MK5009
EXT/INT
OUT
VDD
EXT IN
VGG
OSC OUT
VSS
C92 0.01µF
R92 100
VR91 3V
R78 24k
R77 20k
U65D 7408
Q76
Y85 2.1MHZ
R89 18M
C89 43
C91 43
R90 12M
R343 1.5k
+15V
U285A 7416
C343 0.1µF
VR342 5.6V
C341 100
R341 10k
Q241
C364 0.01µF
R254 5k

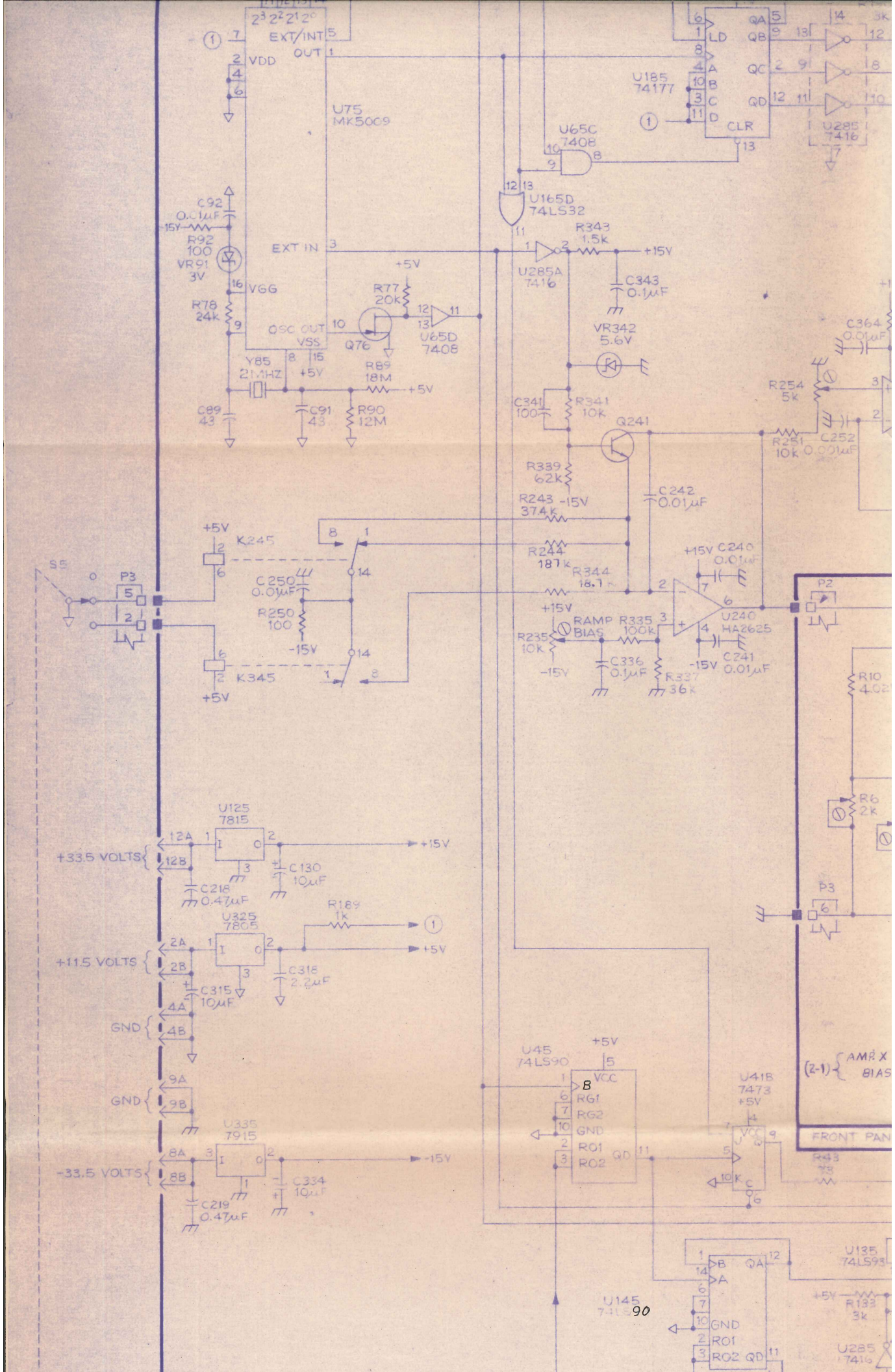
U75
MK5009
EXT/INT
OUT
VDD
EXT IN
VGG
OSC OUT
VSS
C92
0.01µF
R92
100
VR91
3V
R78
24k
Y85
21.1HZ
C89
43
C91
43
R90
12M
R89
18M
R77
20k
Q76
U65D
7408
U65C
7408
U165D
74LS32
U185
74177
LD
CLR
QA
QB
QC
QD
U285
7416
R343
1.5k
U285A
7416
C343
0.1µF
VR342
5.6V
C341
100
R341
10k
Q241
R339
62k
R243
37.4k
R244
187k
R344
18.7k
C242
0.01µF
C240
0.01µF
U240
HA2625
RAMP
BIAS
R335
100k
R235
10k
C336
0.1µF
R337
36k
C241
0.01µF
C364
0.01µF
R254
5k
R251
10k
C252
0.001µF
K245
K345
C250
0.01µF
R250
100
S5
P3
P2
R10
4.02
R6
2k
U125
7815
+33.5 VOLTS
C218
0.47µF
C130
10µF
U325
7805
+11.5 VOLTS
C315
10µF
C318
2.2µF
R189
1k
GND
U335
7915
-33.5 VOLTS
C219
0.47µF
C334
10µF
U45
74LS90
VCC
RG1
RG2
GND
RO1
RO2
QD
U418
7473
U135
74LS93
U145
90
R133
3k
U285
7416
(2-1)
AMP X
BIAS
FRONT PAN

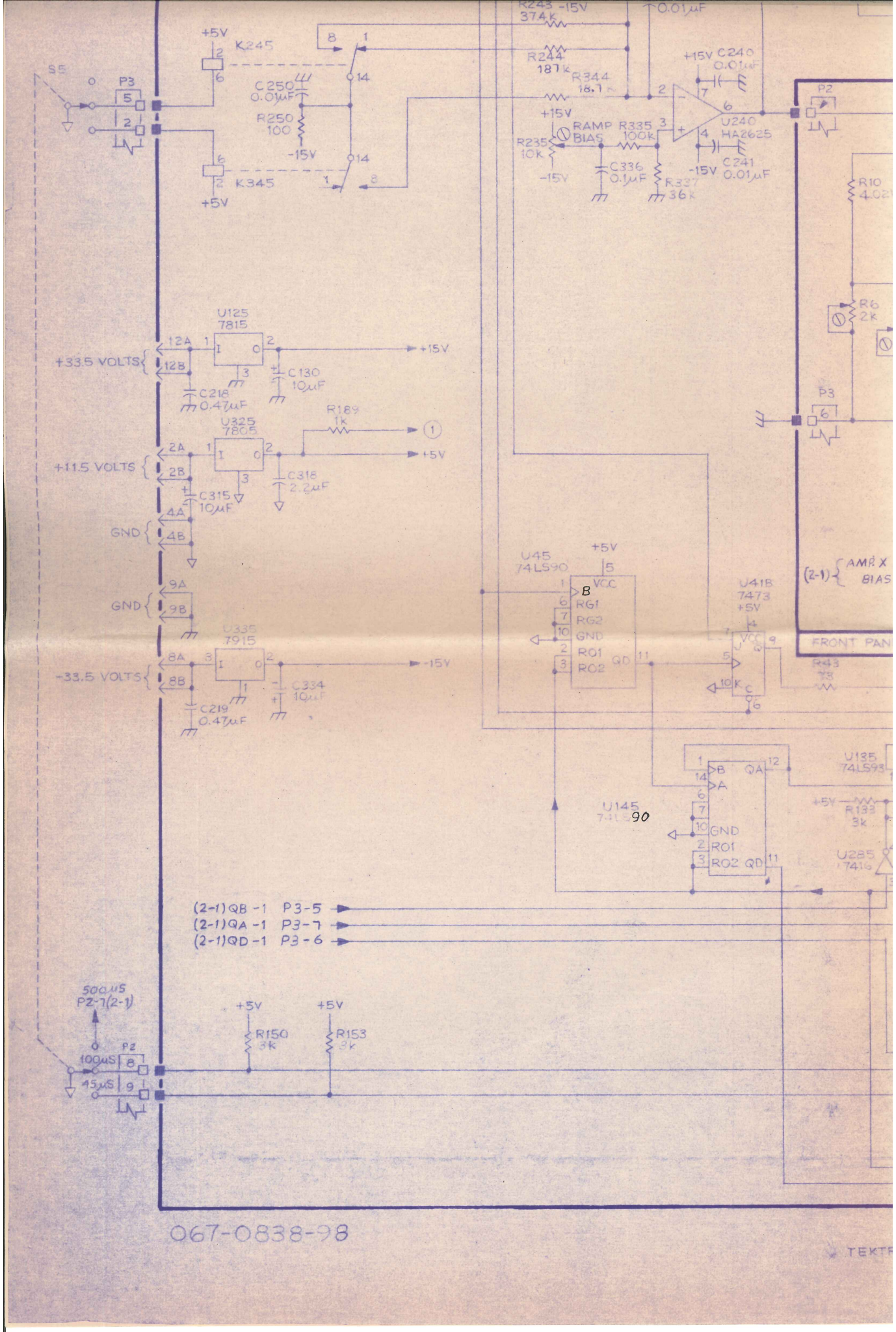

067-0838-98

TEKTR

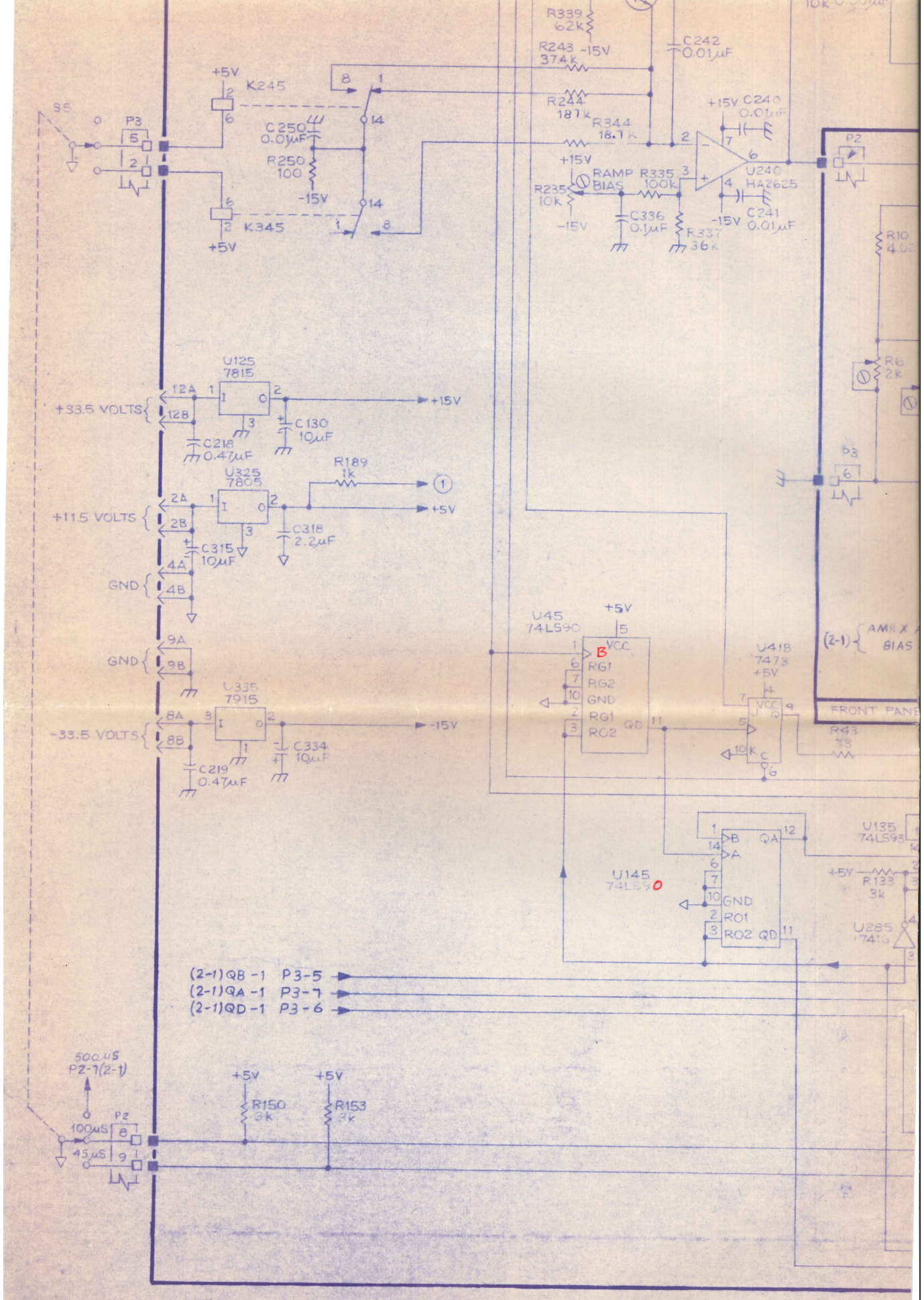

067-0838-98

TEKTR

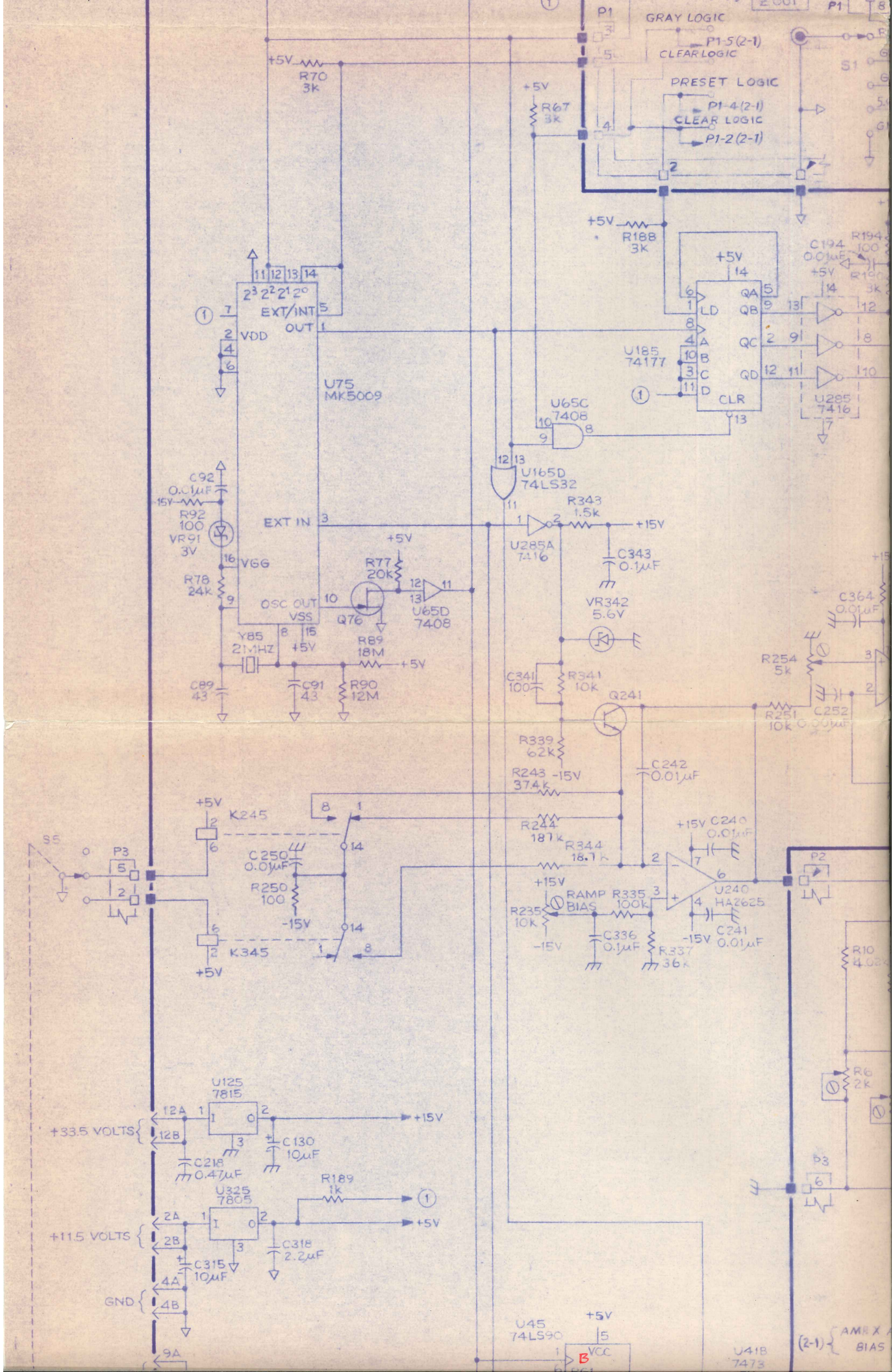
P1
GRAY LOGIC
P1-5 (2-1)
CLEAR LOGIC
PRESET LOGIC
P1-4 (2-1)
CLEAR LOGIC
P1-2 (2-1)
S1
+5V
R70
3k
R67
3k
R188
3k
C194
0.01µF
R194
100
U185
74177
U285
7416
U75
MK5009
EXT/INT
OUT
VDD
VGG
EXT IN
OSC OUT
VSS
U65C
7408
U165D
74LS32
C92
0.01µF
R92
100
VR91
3V
R78
24k
R77
20k
Q76
U65D
7408
Y85
2.1MHZ
R89
18M
C89
43
C91
43
R90
12M
R343
1.5k
+15V
U285A
7416
C343
0.1µF
VR342
5.6V
C341
100
R341
10k
Q241
R339
62k
R243
37.4k
-15V
R244
187k
R344
18.1k
C242
0.01µF
C364
0.01µF
R254
5k
R251
10k
C252
0.01µF
C240
0.01µF
U240
HA2625
RAMP
BIAS
R335
100k
R235
10k
C336
0.1µF
R337
36k
C241
0.01µF
S5
P3
K245
K345
C250
0.01µF
R250
100
P2
R10
4.02k
R6
2k
P3
U125
7815
+33.5 VOLTS
C218
0.47µF
C130
10µF
U325
7805
R189
1k
+11.5 VOLTS
C318
2.2µF
C315
10µF
GND
U45
74LS90
VCC
U41B
7473
(2-1)
AMP X
BIAS

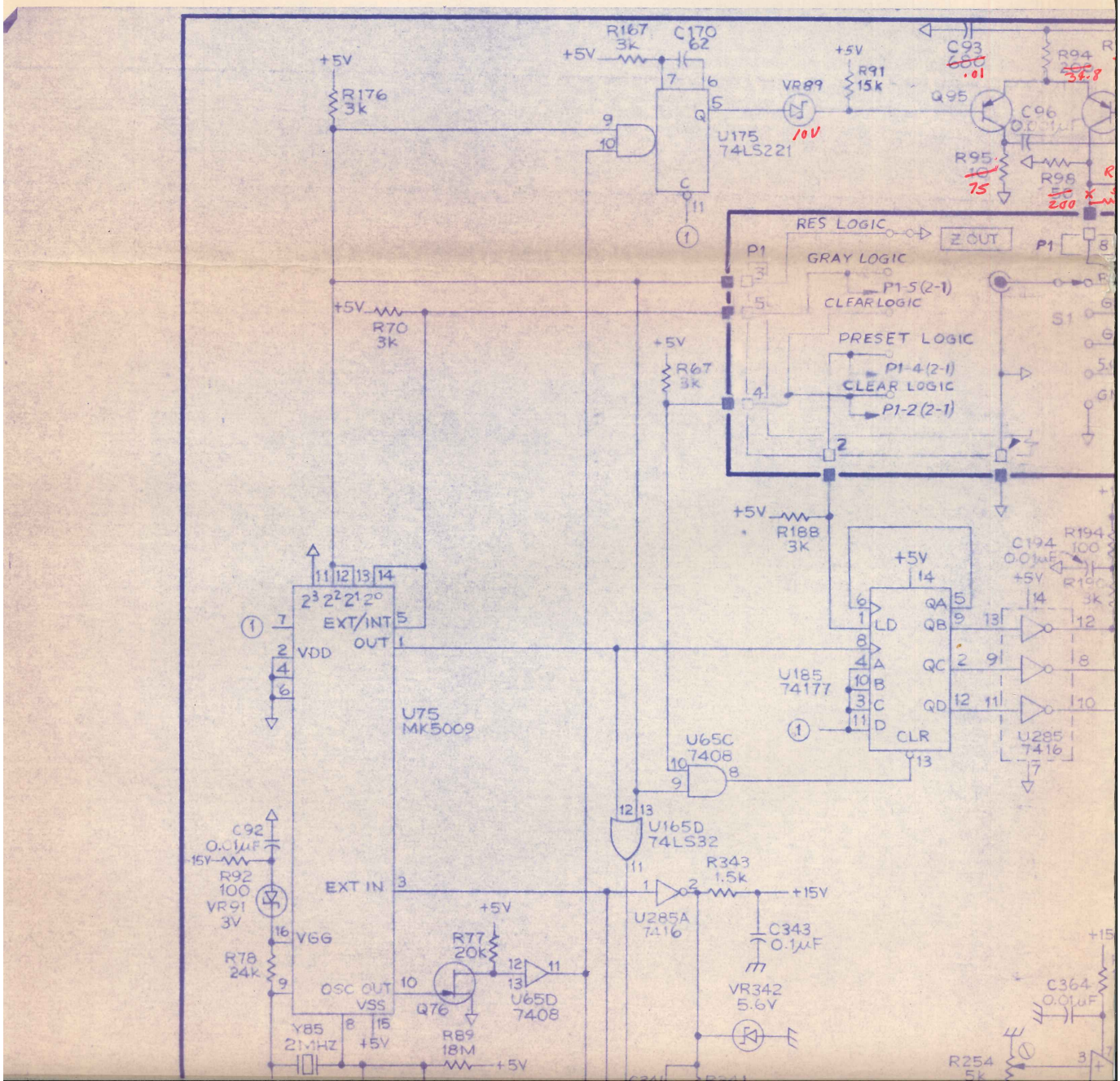
+5V
R176
3k
R167
3k
C170
62
U175
74LS221
VR89
10V
R91
15k
Q95
C93
.01
C96
R95
75
R98
200
RES LOGIC
Z OUT
GRAY LOGIC
P1-5 (2-1)
CLEAR LOGIC
PRESET LOGIC
P1-4 (2-1)
CLEAR LOGIC
P1-2 (2-1)
P1
S1
R70
3k
R67
3k
R188
3k
U185
74177
LD
QA
QB
QC
QD
CLR
C194
0.01µF
R194
100
U285
7416
U75
MK5009
EXT/INT
OUT
VDD
U65C
7408
U165D
74LS32
C92
0.01µF
R92
100
VR91
3V
EXT IN
VGG
R78
24k
OSC OUT
VSS
Y85
2.1MHZ
R77
20k
Q76
U65D
7408
R89
18M
R343
1.5k
+15V
U285A
7416
C343
0.1µF
VR342
5.6V
C364
0.01µF
R254
5k

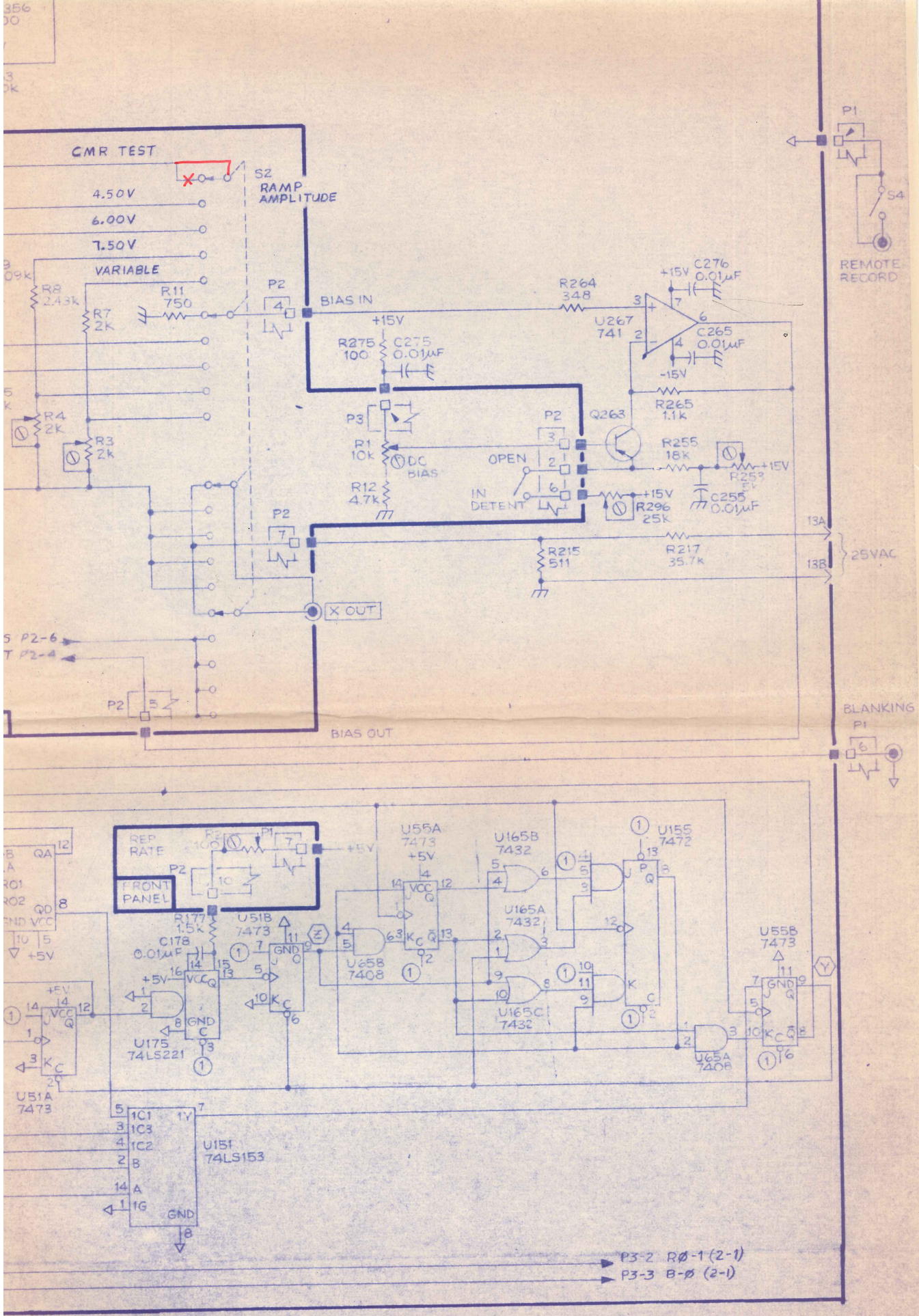

670-6949-ØØ MAINBOARD 1-1

NIX INC. © 1978

FEB 5 1980

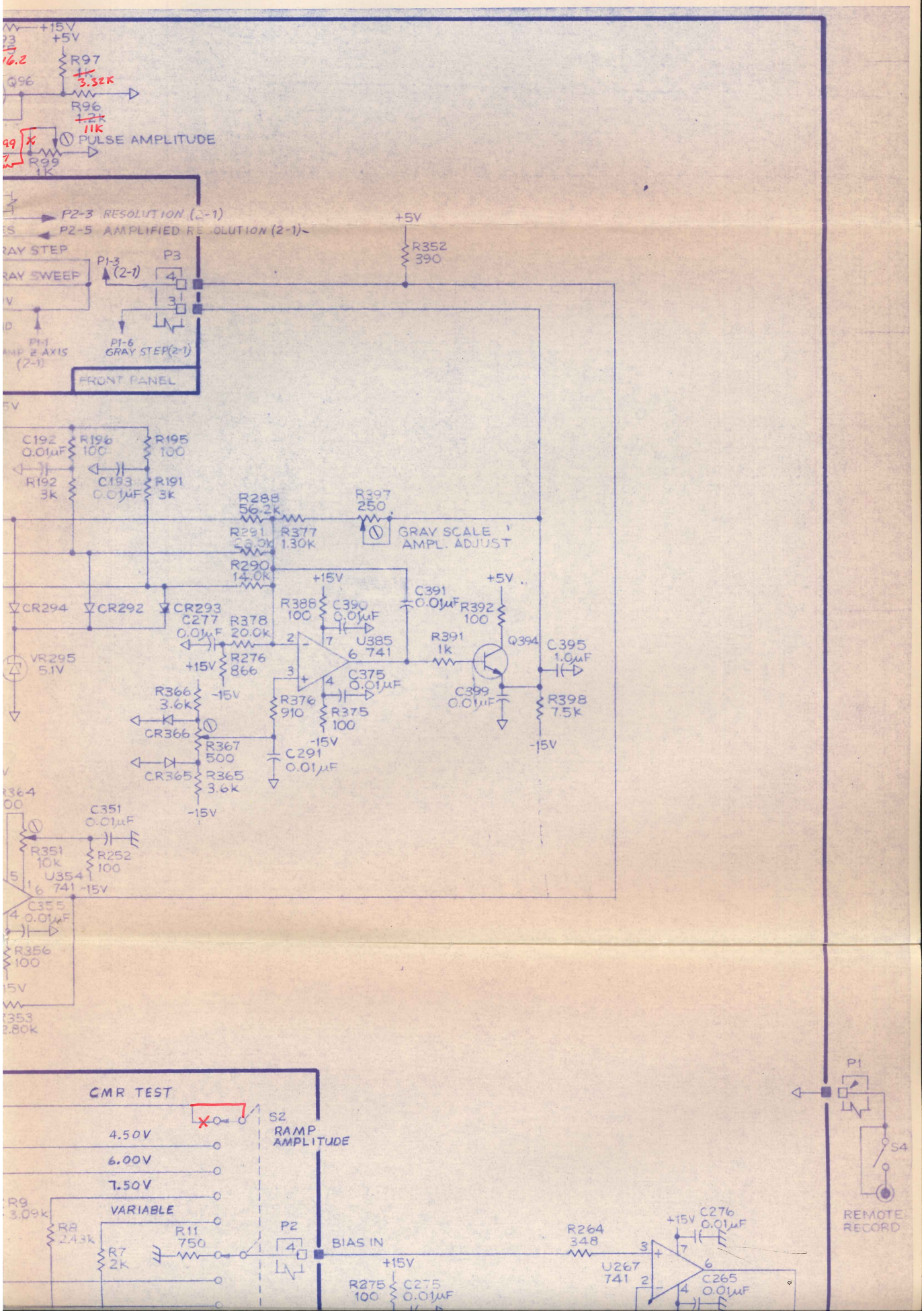
+15V
+5V
R97
3.32K
Q96
R96
11K
PULSE AMPLITUDE
R99
1K
P2-3 RESOLUTION (2-1)
P2-5 AMPLIFIED RESOLUTION (2-1)
GRAY STEP
GRAY SWEEP
P1-3 (2-1)
P3
P1-1 Z AXIS (2-1)
P1-6 GRAY STEP(2-1)
FRONT PANEL
+5V
R352
390
C192 0.01μF
R196 100
R195 100
R192 3k
C193 0.01μF
R191 3k
R288 56.2k
R397 250
R291 56.0k
R377 1.30K
GRAY SCALE AMPL. ADJUST
R290 14.0k
+15V
C391 0.01μF
+5V
R388 100
C390 0.01μF
R392 100
CR294
CR292
CR293
C277 0.01μF
R378 20.0k
U385 741
R391 1k
Q394
C395 1.0μF
VR295 5.1V
+15V
R276 866
C375 0.01μF
R366 3.6k
-15V
R376 910
R375 100
C399 0.01μF
R398 7.5k
CR366
R367 500
-15V
C291 0.01μF
-15V
CR365
R365 3.6k
-15V
C351 0.01μF
R351 10k
R252 100
U354 741
-15V
C355 0.01μF
R356 100
CMR TEST
S2
RAMP AMPLITUDE
4.50V
6.00V
7.50V
VARIABLE
R9 3.09k
R8 2.43k
R7 2k
R11 750
P2
BIAS IN
+15V
R275 100
C275 0.01μF
R264 348
+15V
C276 0.01μF
U267 741
C265 0.01μF
P1
S4
REMOTE RECORD

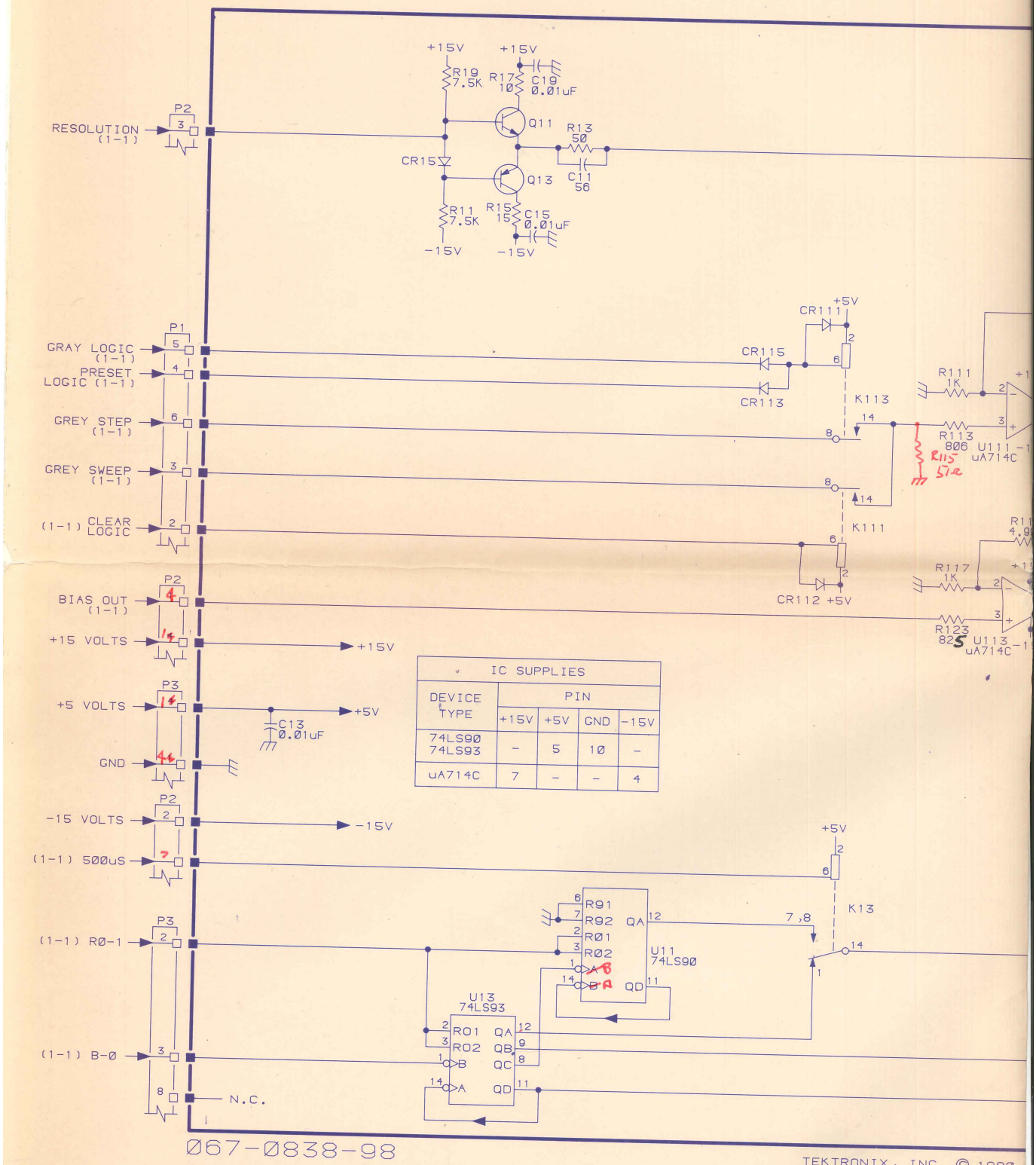

067-0838-98

TEKTRONIX, INC. © 1980

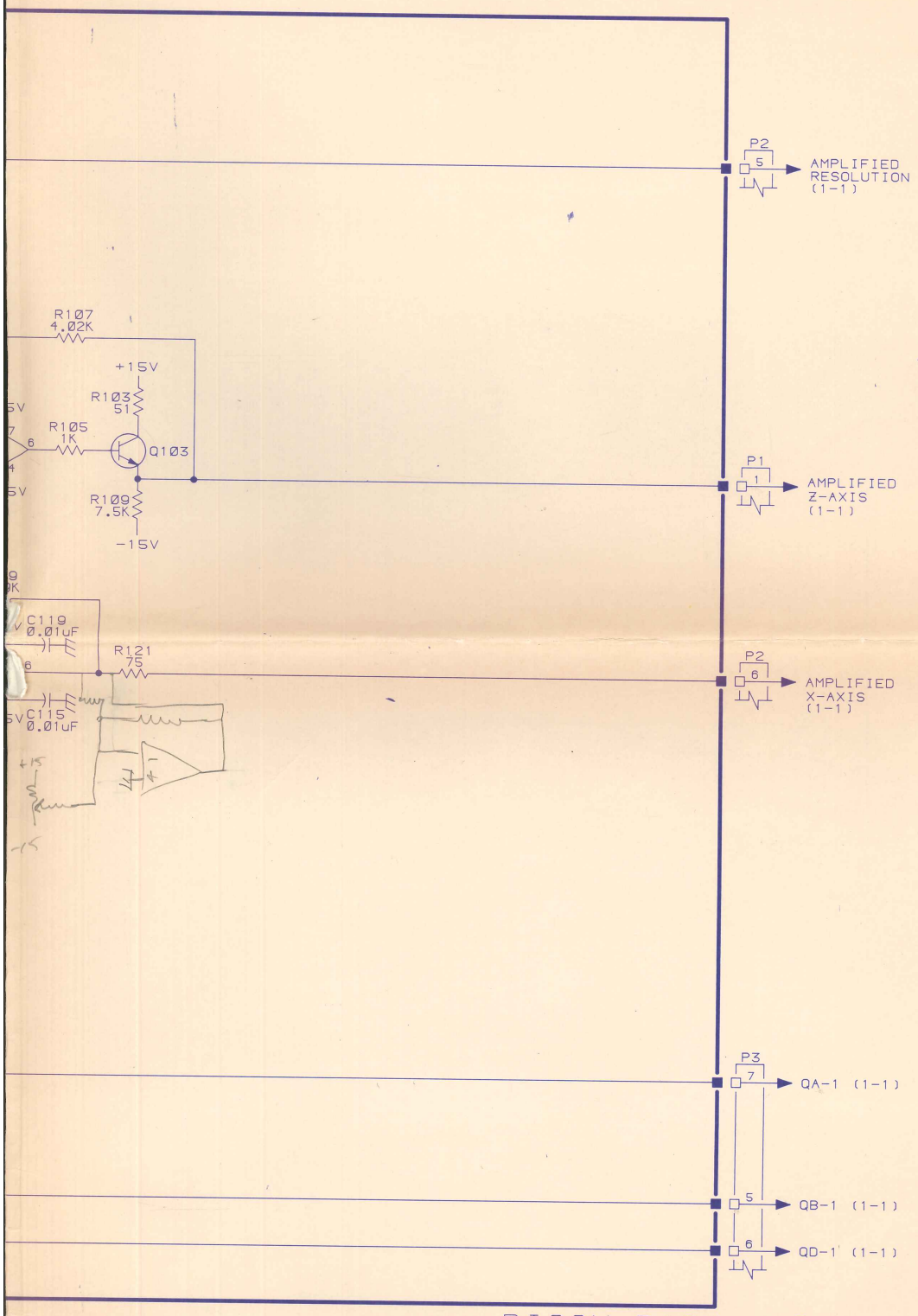

670-6837-00 PIGGY BACK 2-1

FEB 5 1980

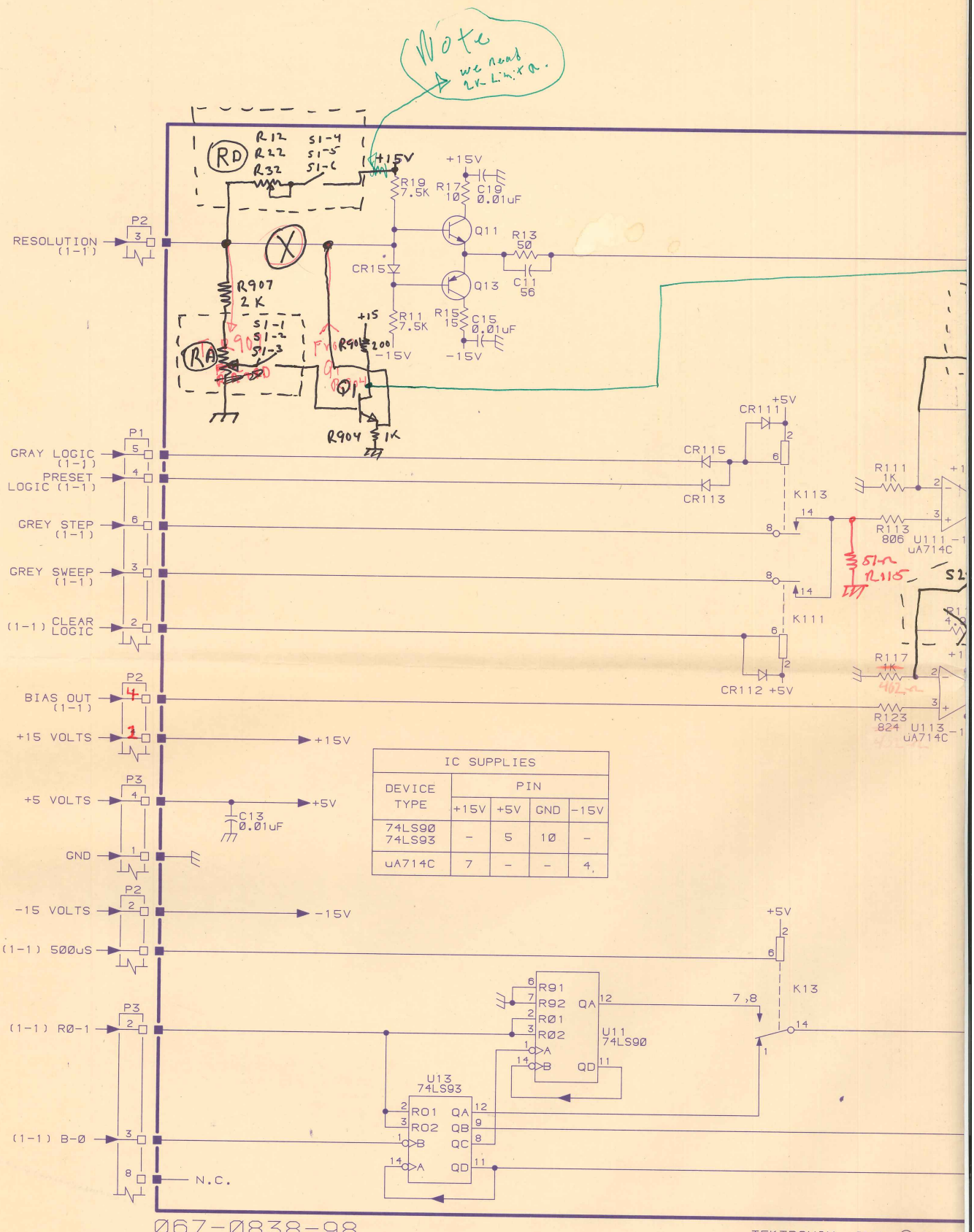

IC SUPPLIES				
DEVICE TYPE	PIN			
	+15V	+5V	GND	-15V
74LS90 74LS93	-	5	10	-
uA714C	7	-	-	4

TEKTRONIX, INC. © 1980

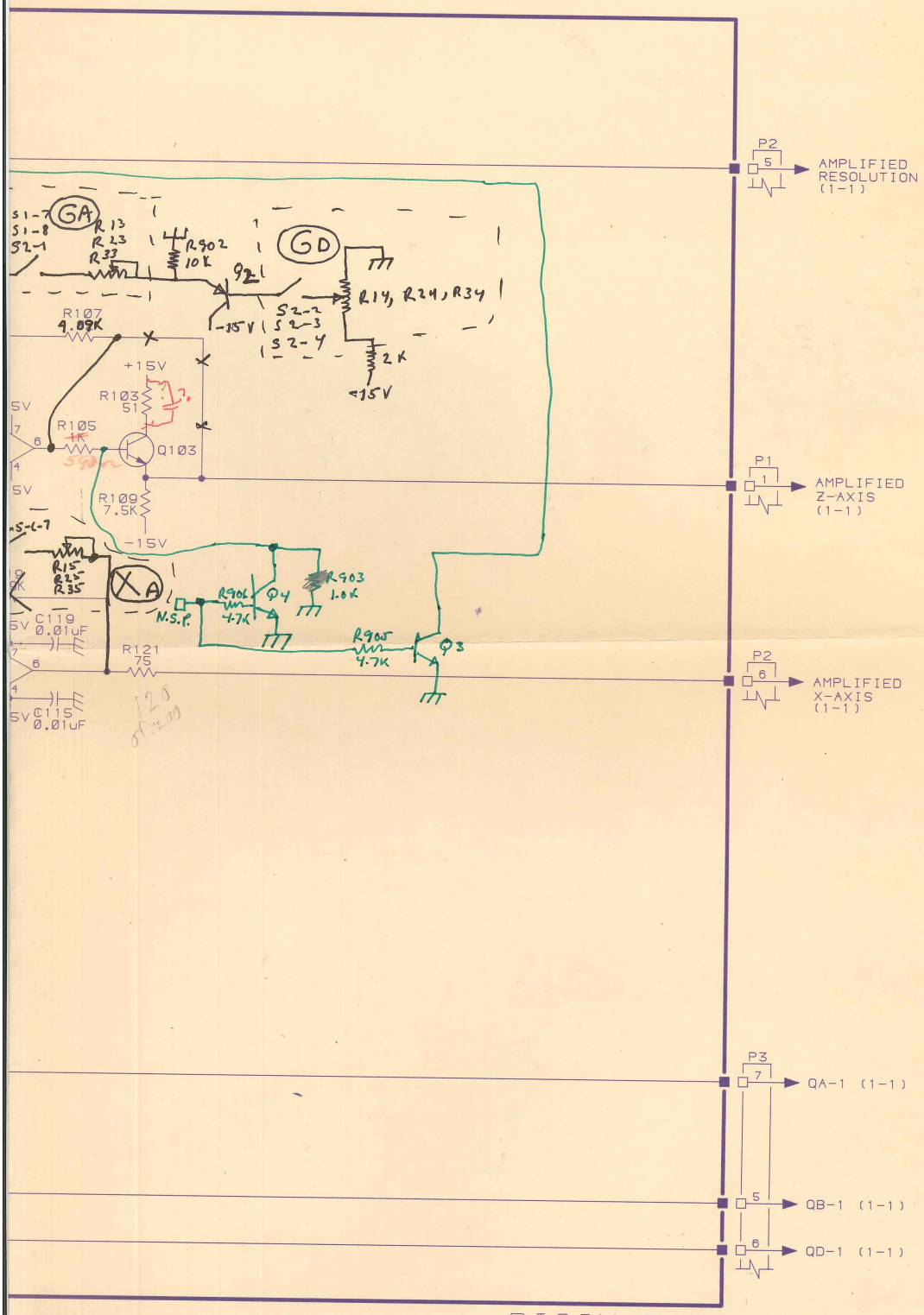

670-6837-00 PIGGY BACK 2-1

FEB 5 1980

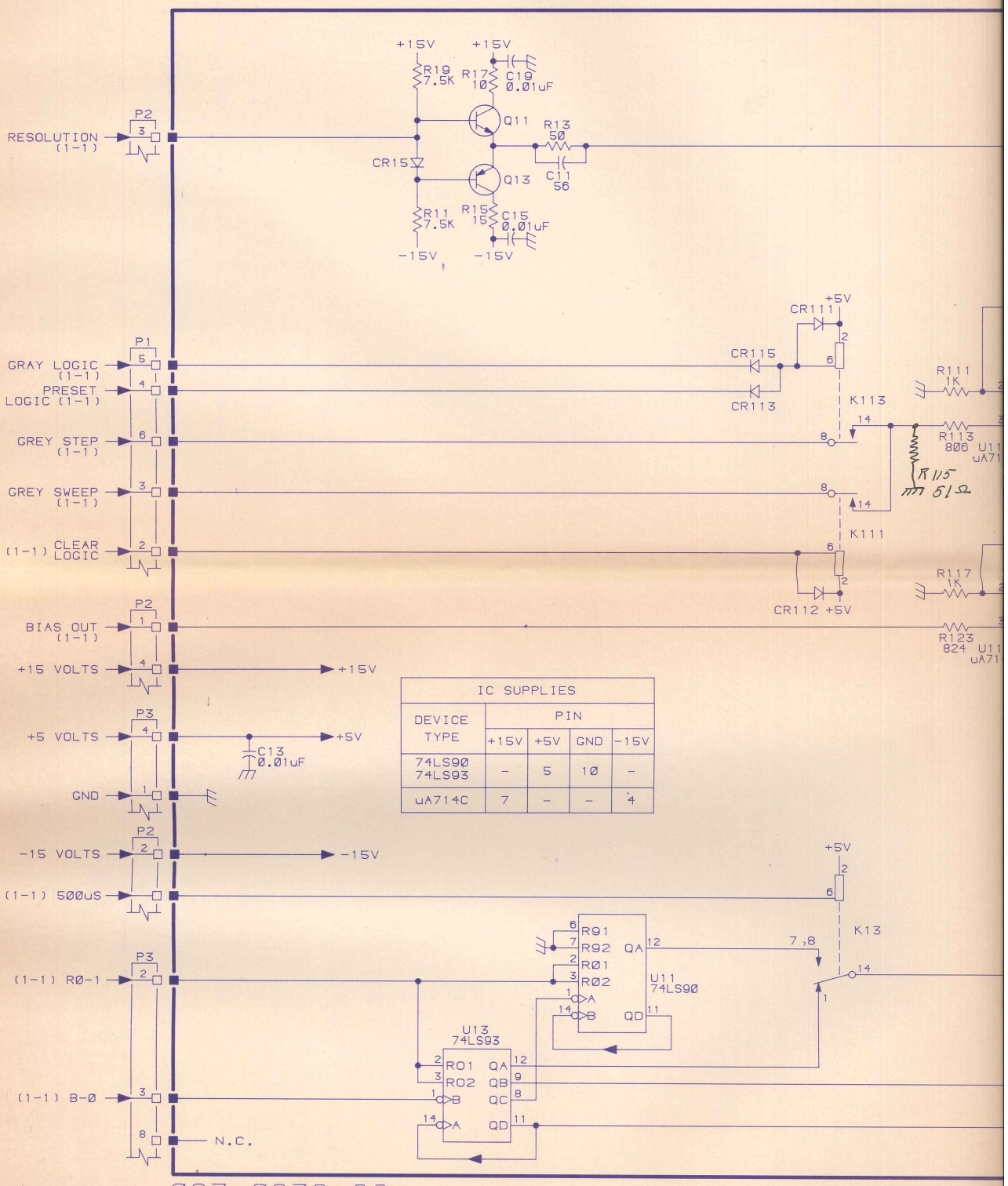

IC SUPPLIES				
DEVICE TYPE	PIN			
	+15V	+5V	GND	-15V
74LS90 74LS93	-	5	10	-
uA714C	7	-	-	4

TEKTRONIX, INC. © 1

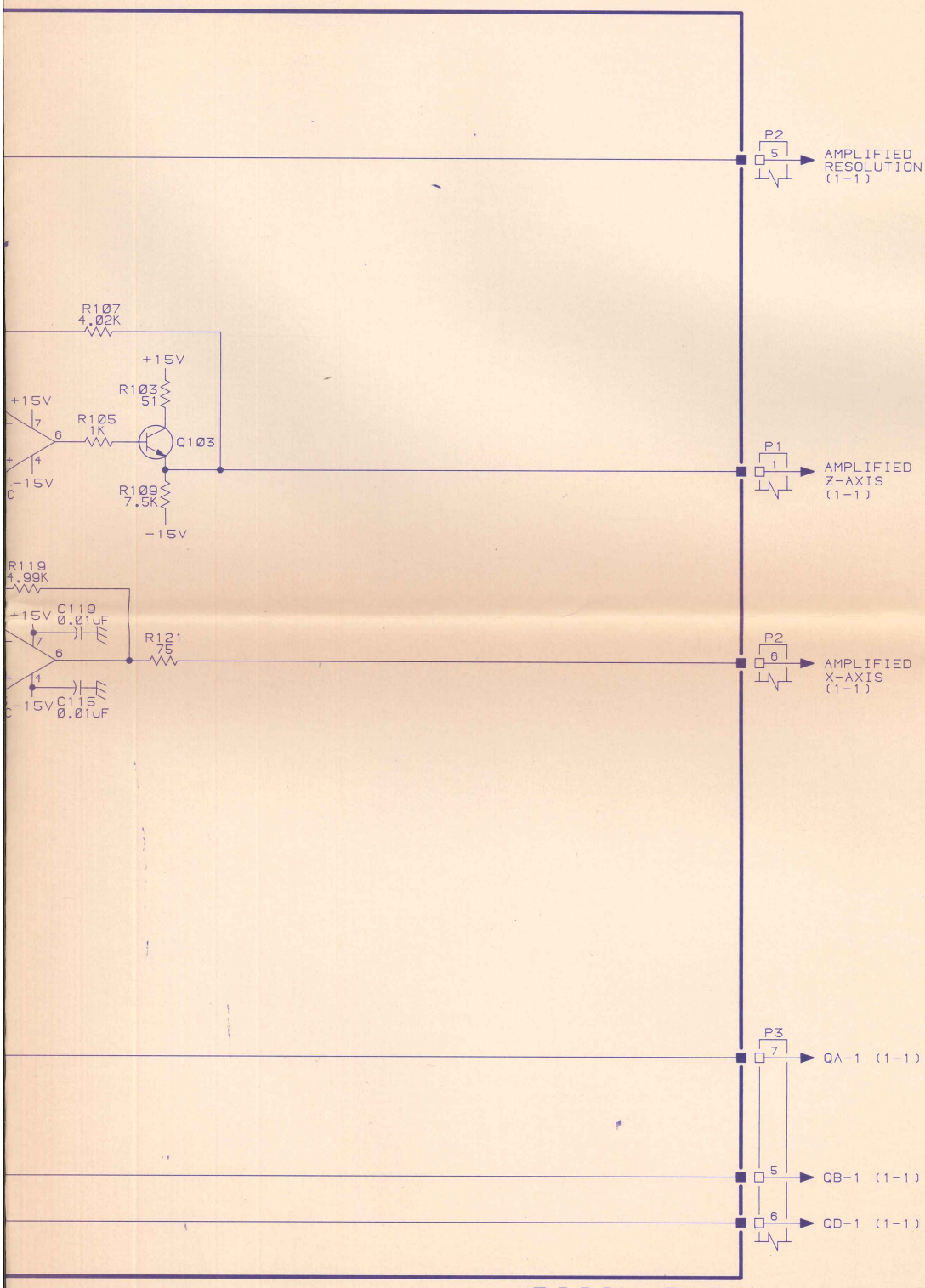

80 670-6837-00 PIGGY BACK 2-1

FEB 5 1980

STAFF ENG COPY

CALIBRATING THE CM 067-0838-98 HIGH AMPLITUDE LINE SCAN SIGNAL GENERATOR

TEST EQUIPMENT REQUIRED

NOTE

Tektronix, Inc. manufactured items are used as the basis for this calibration procedure. Appropriate substitutions may be made with corresponding procedural changes.

1. 1 ea dual trace Oscilloscope with a vertical deflection of .2uV/DIV to 1V/DIV, a sweep rate of .2us/DIV to 1s/DIV, and a bandwidth of 50 MHZ. (TEKTRONIX 465 is recommended.)

2. 1 ea TEKTRONIX TM500 Series Power Module/Mainframe.

3. 1 ea Digital Multimeter with probes. Readout: 4 1/2 digits. DC voltage measurement accuracy: 0.1%. Resolution: 100uV on 2V range. (TEKTRONIX DM501 is recommended.)

4. 1 ea TM500 flexible extender cable TEK P. N. 067-0645-02.

5. 2 ea 50ohm cables TEK P. N. 012-0057-01.

6. 1 ea 50ohm terminator TEK P. N. 011-0049-01.

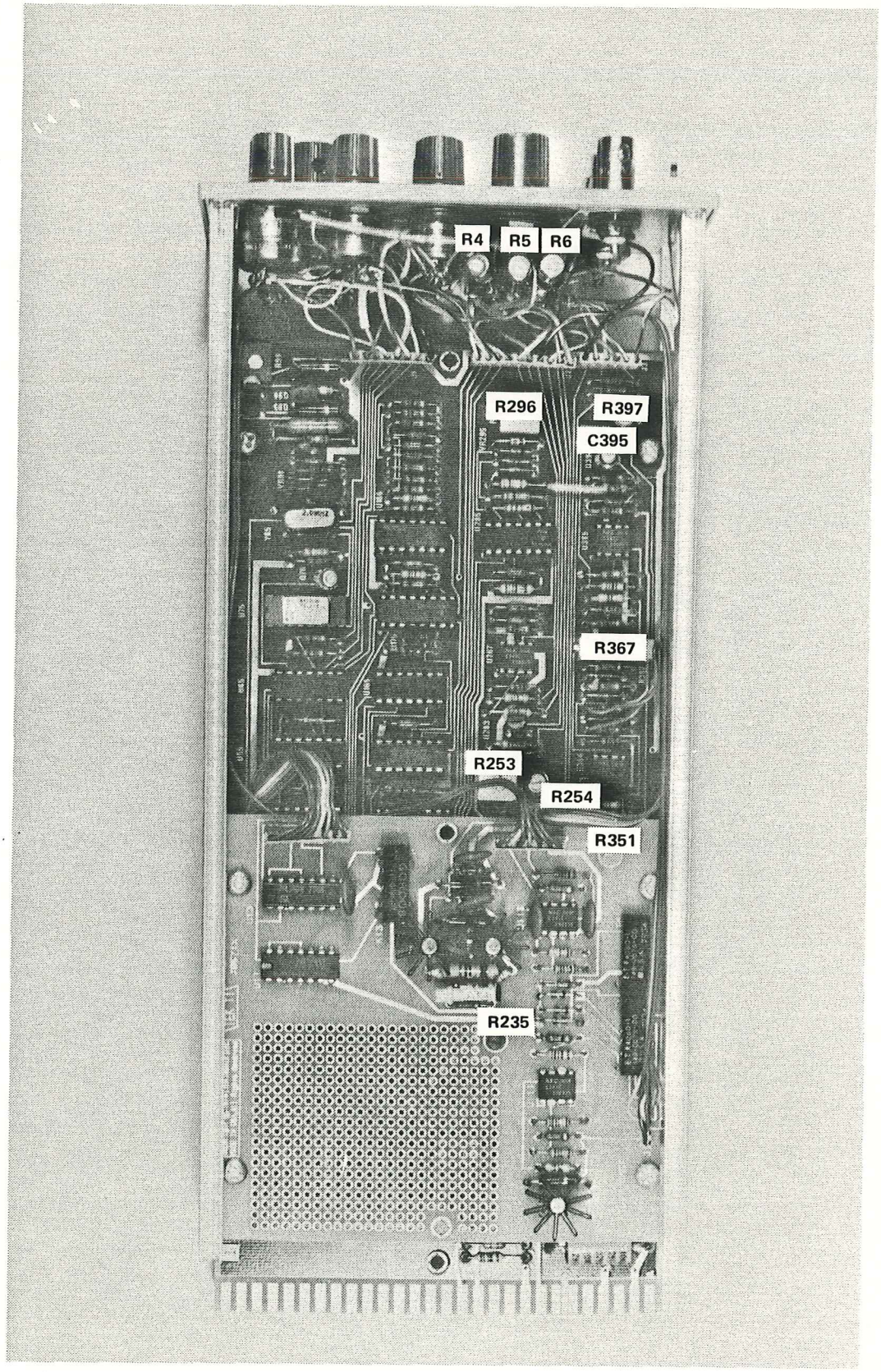
R4
R5
R6
R296
R397
C395
R367
R253
R254
R351
R235

TESTS AND ADJUSTMENTS

CAUTION

Always turn power off before removing or inserting instruments from the TM500 Mainframe.

1. Insert the extender cable into the TM500 Mainframe and connect the Generator (067-0838-98) to the extender cable. Be sure to remove the side panels from the Generator.

2. Set the Oscilloscope TIME/DIV control to 0.5ms/DIV, the Trigger Mode to AUTO, and the Trigger Source to CH 1. Set the channel 1 VOLTS/DIV control to 0.2mV/DIV, the channel 1 VERTICAL INPUT COUPLING switch to GND, and center the POSITION control. Set the channel 1 VERTICAL INPUT COUPLING switch to DC.

3. Connect the 50ohm cable from the X-OUT connector on the Generator to the channel 1 Vertical Input connector on the Scope.

4. Turn the Generator RAMP BIAS control all the way clockwise, the SLEW RATE control to 100us, and the Z-AXIS control to GRAY SWEEP.

NOTE

Refer to Figure 1 for the location of all Generator adjustments.

5. Adjust R235 on the Generator so that the base of the ramp is at 0.0 Volts

6. Set the Scope VOLTS/DIV control to 1V/DIV.

7. Rotate the Generators RAMP BIAS control counterclockwise until it locks in the detent position. Adjust R253 so that the ramp base is -3.0 Volts.

8. Set the Scope VOLTS/DIV control to 2V/DIV.

9. Click the Generators RAMP BIAS control out of detent leaving it turned as far counterclockwise as possible without going back into detent. Adjust R296 so that the base of the ramp is at -6.0 Volts.

10. Set the Scope channel 1 VERTICAL INPUT COUPLING switch to GND. Set the VOLTS/DIV control to 1V/DIV. Adjust the VERTICAL POSITION control to place the trace at the bottom line of the Graticule. Set the channel 1 VERTICAL INPUT COUPLING switch to DC.

11. Rotate the Generators RAMP BIAS control all the way clockwise.

12. Place the Generators RAMP AMPLITUDE control to 4.50 Volts. Adjust trim pot R6 for a ramp amplitude of 4.50 Volts.

13. Place the Generators RAMP AMPLITUDE control to 6.00 Volts. Adjust trim pot R5 for a ramp amplitude of 6.00 Volts.

14. Place the Generators RAMP AMPLITUDE control to 7.50 Volts. Adjust trim pot R4 for a ramp amplitude of 7.50 Volts.

15. Set the Scope VOLTS/DIV control to 2V/DIV.

* 16. Set the Generators RAMP AMPLITUDE control to the VARIABLE position and rotate the corresponding front panel adjustment control in both directions. The signal level as seen on the Scope should vary from 0.0 Volts at full counterclockwise to greater than 12 Volts peak-to-peak at full clockwise.

17. Set the Generators RAMP AMPLITUDE control to the 6.00 Volts position.

18. Set the Scope TIME/DIV control to .1ms/DIV.

* 19. Set the Generator SLEW RATE control to 45us. The ramp time should be 45us.

* 20. Set the Generator SLEW RATE control to 100us. The ramp time should be 100us.

* 21. Set the Generator SLEW RATE control to 500us. The ramp time should be 500us. During the last three checks there should not have been more than a 50mV difference in the amplitude of the ramp between the three slew rates.

22. Set the Generator SLEW RATE control to 100us.

23. Set the Scope TIME/DIV control to 0.5ms/DIV.

* 24. Turn the Generator RPTN RATE control from full counterclockwise to full clockwise. The ramp period should vary from less than 0.5ms/Cycle to greater than 1.0ms/Cycle.

25. Connect the second 50ohm cable between the Scope channel 2 Vertical Input connector and the Generator BLANKING connector.

* 26. Set the Scope VERTICAL MODE switch to ALT. Set the channel 1 and 2 VOLTS/DIV controls to 1V/DIV. Check that a TTL high occurs which is coincident with, and of the same duration and period as, the ramp of the X-OUT output.

27. Set the Scope TIME/DIV control to 1ms/DIV.

* 28. Set the Generator Z-AXIS control to RESOLUTION. The blanking signal should go high for 5 consecutive ramps at X-OUT, then stay low for 5 ramps.

29. Set the Scope VERTICAL MODE switch to channel 1 and the TIME/DIV control to 0.5ms/DIV.

30. Disconnect the 50ohm cable from the channel 2 Vertical Input connector and the BLANKING connector.

31. Remove the 50ohm cable from the Generator X-OUT connector and connect it to the Z-OUT connector. Attach the 50ohm terminator to the other end of the cable and reconnect it to the Scope.

32. Set the Generator Z-AXIS control to GRAY SWEEP.

33. Set the Scope VOLTS/DIV control to .2V/DIV.

34. Adjust R351 on the Generator so that the base of the ramp is at 0.0 Volts. Overshoot on the falling side of the ramp is permissible.

35. Set the Scope VOLTS/DIV control to 1V/DIV.

36. On the Generator adjust R254 for a ramp amplitude of 5.00 Volts.

37. Set the Scope TIME/DIV control to 0.2us/DIV.

38. Set the Generator Z-AXIS control to RESOLUTION. Adjust R99 so that the pulse amplitude is 5.0 Volts. The frequency of the pulses should be 2MHZ (a period of 0.5us) with a duty cycle of approximately 25%.

39. Set the Generator Z-AXIS control to GND.

40. Place the DMM HI probe on the lead of C395, the LO probe on the Z-OUT connector ground. Set the RANGE/FUNCTION control to the lowest DC Volts position and adjust R367 so that the DMM reads 0.0 Volts (within ± 0.5mv.)

41. Set the DMM RANGE/FUNCTION control to 20 V DC. Place the HI probe on the Generator Z-OUT output. The LO probe remains on the Z-OUT connector ground.

42. Set the Generator Z-AXIS contol to the 5.0 Volt position. Adjust R397 for 5.00 Volts on the DMM (within ± 0.5mv.)

* 43. Set the Generator Z-AXIS control to the GRAY STEP position. Note the variation from 0.0 Volts to 5.0 Volts in 8 discrete steps, each of one second duration. An alternate method for observing the above is to set your Scope TIME/DIV control to 1s/DIV, set the VOLTS/DIV control to 1V/DIV and connect the 50ohm cable to the Z-OUT connector.

44. Connect the ~~50ohm cable~~ scope probe to the Generator ~~Z~~ X-OUT connector. Conductor center. Connect the probe ground to the Z-AXIS output ground.

45. Set the Scope TRIGGER MODE to LINE and the VOLTS/DIV control to .5V/DIV.

* 46. Set the Generator RAMP AMPLITUDE control to the CMR TEST position. A Sine wave of approximately 1 Volt peak-to-peak should be observed.

47. Return the Generator RAMP AMPLITUDE control to the 6.0 Volt position.

48. Set the DMM RANGE/FUNCTION control to the OHMS position.

* 49. Place one DMM probe on each side of the Generator REMOTE RECORD connector. You should read an open, push the REMOTE RECORD button and you should read a short.

* Indicates a performance check only and no adjustment should be necessary. If the instrument does not pass one of these performance checks, trouble-shooting may be needed to determine the reason.

This concludes the calibration procedures for the CM 067-0838-98 High Amplitude Line Scan Signal Generator.

LIST OF REPLACEABLE PARTS

This section provides a survival list of Chassis and Electrical parts for the CM 067-0838-98 High Amplitude Line Scan Signal Generator. These parts may be ordered through Tektronix, Inc.. This part listing is broken into the following divisions:

CHASSIS ASSEMBLY PARTS LIST

MAINBOARD ELECTRICAL PARTS LIST

PIGGYBACK ELECTRICAL PARTS LIST

CHASSIS ASSEMBLY

Circuit No. or Quantity	Description	Part Number
1	ECB Mainboard	CM 670-6949-00
1	ECB Piggyback	CM 670-6837-00
1	Panel, Front	CM 333-1483-10
1	Sub Panel, Front	CM 386-2402-15
1	Frame Section, Bottom	CM 426-0724-22
1	Frame Section, Top	CM 426-0725-23
2	Shield, Side Covers	337-1399-00
2	Knob, Large Gray	366-1028-00
4	Knob, Small Gray	366-1209-00
1	Knob, Latch	366-1422-01
1	Switch, Pushbutton, Remote Record	260-0247-00
1	Switch-Rotary, Slew Rate	260-1139-00
1	SP1212, Ramp Amplitude	260-2045-00
1	SP1213, Z-AXIS Control	260-2046-00
1	BNC Connector, X-OUT	131-0247-00
3	BNC Connector, Z-OUT, Blanking, Remote Record	131-0955-00
1	Electrical Shield, Front Panel	CM 200-1273-09
3	Solder Lug, (locking), BNC	210-0255-00
1	Spring	214-1061-00
1	Latch	214-1513-01
1	Pin Latch	214-1840-00
2"	Bare Wire #22	176-0121-00
5"	Teflon Insulation	162-0025-00
2	Spacer Posts, 1"	129-0089-00
2	Mounting Blocks	

CHASSIS ASSEMBLY PARTS LIST (cont.)

Circuit No. or Quantity	Description	Part Number
6	Screw, 6-32 X .312	211-0507-00
2	Screw, 6-32 X .312	211-0538-00
2	Screw, 6 X .313	213-0146-00
4	Screw, 6 X .375	213-0229-00
1	Screw, 2-56 X .250	213-0254-00
7	Nut	210-0583-00
4	Nut	210-0590-00
5	Washer	210-0940-00
2	Washer	210-0978-00
1	Cable Kit, Wire Kit	198-3955-00
1	Cable Kit, 8 Cond - Orange Housing	175-5156-00
1	Cable Kit, 7 Cond - Black Housing	175-5158-00
1	Cable Kit, 6 Cond - Brown Housing	175-5157-00
1	Cap .47 uh	283-0134-00
1	100 K 10% Pot, Rep Rate	311-0467-00
1	2 K W/Switch Pot, Variable	311-0632-00
1	10 K Pot, Ramp Bias	311-1104-00
3	2 K	311-1265-00
1	Res 1.5 K 1/4 W 5%	315-0152-00
1	Res 4.7 K	315-0472-00
1	Res 75 ohm	315-0750-02
1	Res 750 ohm	315-0751-00
1	Res 2.43 K 1/8 W 1%	321-0230-00
1	Res 3.09 K	321-0240-00
1	Res 4.02 K	321-0251-00

This concludes the Chassis Assembly Parts List

LIST OF REPLACEABLE PARTS

CM 670-6949-00 MAINBOARD

Circuit No. or Quantity	Description	Part Number
J1,2,3	Square Pins	131-0608-00
U75,151,175	Socket, 16 Pin	136-0260-02
U41,45,51,55, 65,135,145,155, 165,185,285	Socket, 14 Pin	136-0269-02
U354,385	Socket, 8 Pin	136-0514-00
U155	I.C. 7472	156-0038-00
U41,51,55	I.C. 7473	156-0039-00
U267,354,385	I.C. 741C	156-0067-00
U285	I.C. 7416	156-0093-00
U65	I.C. 7408	156-0129-00
U125	I.C. 7815	156-0312-00
U240	I.C. HA2625	156-0317-00
U325	I.C. 7805	156-0277-00
U75	I.C. MK5009	156-0410-00
U165	I.C. 74LS32	156-0749-00
U335	I.C. 7915	156-0527-00
U185	I.C. 74177	156-0536-00
U135	I.C. 74LS93	156-0646-00
U45,145	I.C. 74LS90	156-0656-00
U175	I.C. 74LS221	156-0733-00
U151	I.C. 74LS153	156-0798-00
Q95,96,263	Transistor	151-0188-00
Q241	Transistor	151-0223-00
Q394	Transistor	151-0302-00
Q76	Transistor	151-1055-00
CR292,293, 294,365,366	Diode	152-0141-02
VR89	Diode, Zener, 10V	152-0149-00
VR342	Diode, Zener, 5.6V	152-0175-00
VR295	Diode, Zener, 5.1V	152-0226-00
VR91	Diode, Zener, 3V	152-0278-00
245,345	Relay	148-0086-01
C93,291,391	Cap .01uf	283-0204-00
C395	Cap 1uf	283-0317-00
C89,91	Cap 43pf	283-0600-00
C170	Cap 62pf	283-0629-00
C318	Cap 2.2 uf	290-0136-00
C218,219	Cap .47uf	290-0283-00
C130,315,334	Cap 10uf 25V	290-0290-00

MAINBOARD PARTS LIST (cont.)

Circuit No. or Quantity	Description	Part Number
C92,178,192, 193,194,240, 241,250,255, 265,275,276, 277,351,355, 364,374,375, 390,399	Cap .01 uf	281-0773-00
C40,50,53,63, 140,163,336, 343	Cap .1uf	281-0775-00
C341	Cap 100pf	283-0060-00
C96,252	Cap .001uf	283-0067-00
C242	Cap .01uf 1%	283-0593-00
R95	Res 75ohm	301-0750-00
R98	Res 200ohm, 5% 1/2W	301-0201-00
R92,194,195, 196,250,252, 275,356,364, 375,388,392	Res 100ohm	315-0101-00
R189,391	Res 1K	315-0102-00
R251,341	Res 10K	315-0103-00
R335	Res 100K, 5% 1/4W	315-0104-00
R265	Res 1.1K	315-0112-00
R177,343	Res 1.5K	315-0152-00
R91	Res 15K	315-0153-00
R255	Res 18K	315-0183-00
R77	Res 20K	315-0203-00
R353	Res 2.7K	315-0272-00
R78	Res 24K	315-0243-00
R67,70,133, 150,153,167, 176,188,190, 191,192	Res 3K	315-0302-00
R43	Res 33ohm	315-0330-00
R365,366	Res 3.6K	315-0362-00
R337	Res 36K	315-0363-00
R352	Res 390ohm	315-0391-00
R339	Res 62K	315-0623-00
R398	Res 7.5K	315-0752-00
R376	Res 910ohm	315-0911-00
R90	Res 12M, 10%, 1/4W	316-0126-00
R244	Res 187K	321-0411-00
R199	Res 51Ω	315-0510-00

MAINBOARD PARTS LIST (cont.)

Circuit No. or Quantity	Description	Part Number
R89	Res 18M	316-0186-00
R93	Res 16.2ohm	321-0021-00
R264	Res 348ohm, 1%,1/8W	321-0149-00
R215	Res 511ohm	321-0165-00
R276	Res 866ohm	321-0187-00
R97	Res 3.32K	321-0243-00
R377	Res 1.30K, 1%, 1.8W	321-0204-00
R96	Res 11K	321-0293-00
R290	Res 14K	321-0303-00
R344	Res 18.7K	321-0315-00
R378	Res 20K	321-0318-00
R291	Res 28K	321-0332-00
R217	Res 35.7K	321-0342-00
R243	Res 37.4K	321-0344-00
R288	Res 56.2K	321-0361-00
R94	Res 34.8ohm	323-0053-00
R254	Var Res 5K	311-0633-00
R99	Var Res 1K	311-1225-00
R253	Var Res 5K	311-1227-00
R235,351	Var Res 10K	311-1228-00
R296	Var Res 25K	311-1231-00
R367	Var Res 500ohm	311-1168-00
R397	Var Res 250ohm	311-1260-00
Y85	Crystal, 2MHZ	158-0070-01
U125,325,335	Heatsink	214-1967-00
3	#6 Nut	210-0407-00
3	Washer	210-1160-00
3	Screw	211-0507-00
3/8"	Insulation	162-0025-00

This concludes the Mainboard Parts List

LIST OF REPLACEABLE PARTS

CM 670-6837-00 PIGGYBACK

Circuit No. or Quantity	Description	Part Number
J1,2,3	Square Pins	131-0608-00
3	Heatsink	214-0498-00
K13	Relay, Dip	148-0086-01
K111,113	Relay, Dip	148-0076-00
C11	Cap 56pf, 600V	281-0521-00
C13,15,19, 113,115	Cap .01uf, 150V	283-0003-00
CR15,111,113, 115,117	Diode	152-0141-02
U13	I.C. 74LS93	156-0646-00
U11	I.C. 74LS90	156-0656-00
U111,113	I.C. 1458	156-0067-00
Q13	Transistor	151-0301-00
Q11,103	Transistor	151-0302-00
R17	Res 10ohm, 5%,1/2W	301-0100-00
R15	Res 15ohm, 5%, 1/2W	301-0150-00
R103	Res 51ohm, 5%, 1/2W	301-0510-00
R105	Res 1K, 5%, 1/4W	315-0102-00
R115	Res 51ohm, 5%, 1/4W	315-0510-00
R121	Res 75ohm, 5%, 1/4W	315-0750-00
R11,19,109	Res 7.5K 5%, 1/4W	315-0752-00
R113	Res 806ohm, 1%,1/8W	321-0184-00
R123	Res 825ohm 1%, 1/8W	321-0185-00
R111,117	Res 1K, 1%, 1/8W	321-0193-00
R107	Res 4.02K, 1%, 1/8W	321-0251-00
R119	Res 4.99K	321-0260-00
R13	Res 50ohm, 1%, 1/2W	323-0626-00

This concludes CM 067-0838-98 Replacable Parts List.

STAFF ENG COPY

INSTRUCTION MANUAL

CUSTOM MOD

Copyright © 1980 by Tektronix, Inc., Beaverton, Oregon. Printed in the United States of America. All rights reserved. Contents of this publication may not be reproduced in any form without permission of Tektronix, Inc.

U.S.A. and foreign TEKTRONIX products covered by U.S. and foreign patents and/or patents pending.

TEKTRONIX is a registered trademark of Tektronix, Inc.

CM 067-0838-98

High Amplitude Line Scan Signal Generator

(Preliminary Survival)

Tektronix, Inc. • P.O. Box 500 • Beaverton, Oregon 97077 • Phone 644-0161 • Cables: Tektronix

061-2328-00 Revised 2/80 RDH

NOTE TO OUR CUSTOMERS

This is a special product. Because of its custom nature, we may have used some non-standard parts in its design. Since these parts require special ordering, you may experience delay in the repair of your product.

To keep such delays to a minimum, be sure an Identification Tag is attached to the instrument:

THIS:

OR:

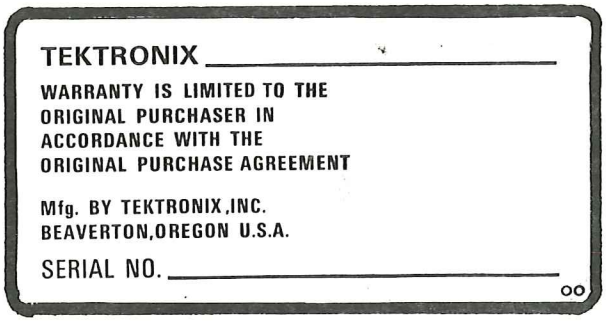

If you are installing your own modification, this tag is supplied in your kit. Attach it *near the serial number* of the instrument you have modified. This immediately notifies our Service Technician that your product needs special repair and ordering attention.

6/23/81

Changes to 067-0838-98
to make outputs selectable

MAINBOARD

1. Add wire from U41B pin 8 on Mainboard to new square pin on Piggy.

2. Add wire from U41B pin 9 to U175 pin 11 (lift pin 11)

Piggy

1. Replace R015 with 2.49k 321-0231-00 (JE)
~~Replace R025 with 2.50k 321-0277-00 (JT)~~ UA? ~~JT.~~
(R117 = 499Ω)

2. Replace R105 with diode 152-0141-02
add 10kΩ pull up to +15V 315-0103-00

3. Replace R014 with 4.02k 321-0251-00
~~Replace R024 with 1.21k 321-0201-00~~

4. Rewire U113 as shown

(5) Rewrite 4111 as shown

(6) Rewrite Resolution as shown

Merle 6/23/81

RESOLUTION

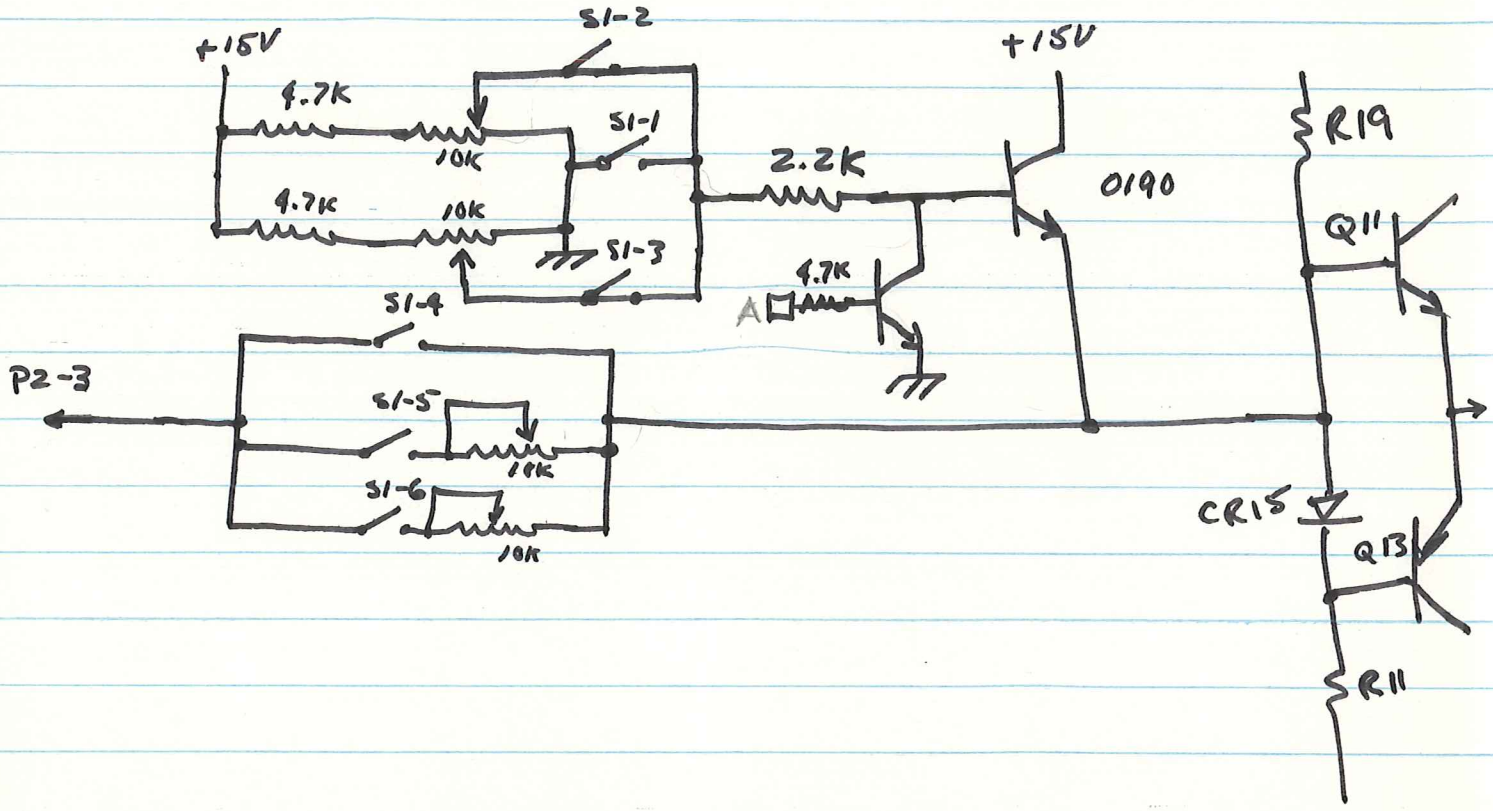

7/1/81 MEH.

AMP Z AXIS (ALT)

(UNTRIED)

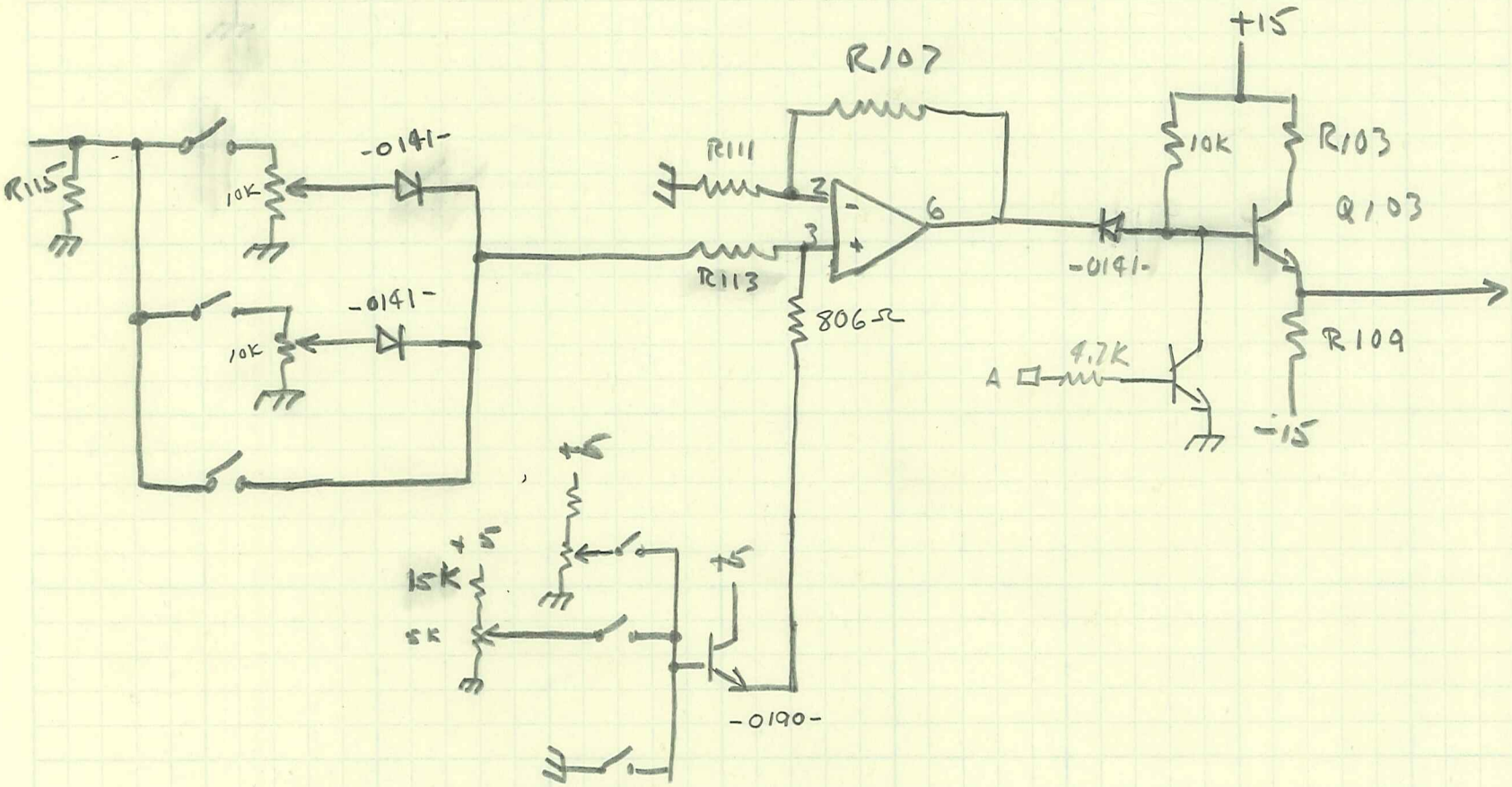

6/23/81 MHH.

AMP X-AXIS

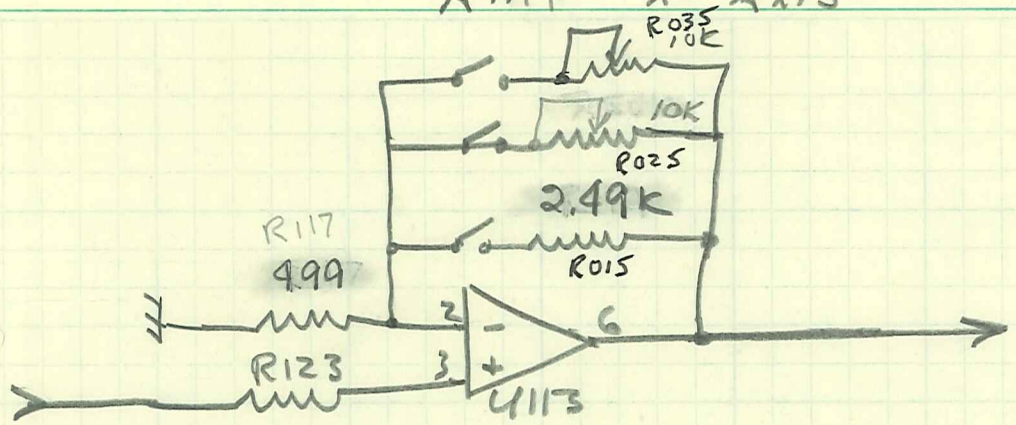

JE R015 = 2.49 k

6/23/81 MJH.

AMP Z-AXIS

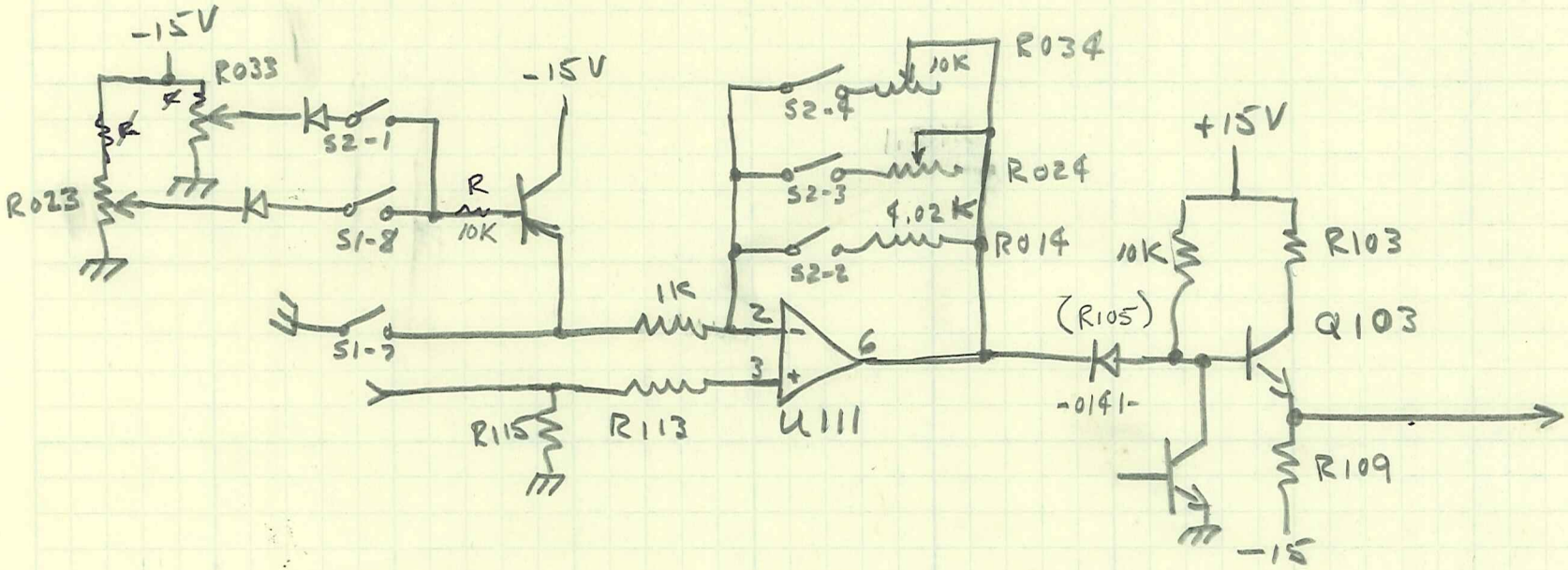

6/23/81 MYH.

① 20 May

Test Fixture 067-0838-98
High Amplitude Line Scan Signal Generator

I Changes Made to Instrument (Parts)

① R105 Changed from 1K to ~~590Ω~~ 152-0141-02
Insures a 5V Peak Signal for Z-Axis at P1-
(Location Piggy Back Bd.)

② R117 Changed from 1K to ~~402Ω~~ 499
Insures a ±8 for X-Axis at P2-6
(Location Piggy Back Bd.)

③ ~~Pot. R253 Changed from 5K to 20K~~
~~R255 Changed from 18K to 12K~~
~~Helps Insure ramp base can be set at -3.0V~~
~~when RAMP BIAS Cont. is in detent Position~~
~~(Location Main Board)~~

II Changes made to Schematic

① Pin 8 of U41B A wire has been added going from Main Board to Piggy Back Board labeled (NEW SQUARE PIN). This Should be on (070-6949-00 Main Board 1-1) drawing.

III Suggested Changes to Instrument

① A 2K resistor should be added the RD section. We need to reduce the current from the +15V supply. The +15V can appear at P1-8 depending on the setting of RD.

② Changing R296 from a 25K to 50K. This should give sufficient range to set the base line at -6V when CAL-BIAS is just out of detent position. (This lack of range showed up 3 out of 9 Tim

③ The +15V Regulator (U125 - 7815) is operating quite warm. Heat sinking will not be easy with present Board layout. A Zener diode in series with the 33V Power supply may be a good approach.

IV Some Questions

① Z-Axis transitions are reaching back into the X-Axis this is causing ringing in the X-Axis output.

Ⓐ Decoupling of Q103 (Pig. Bd.) helps a little. (Not enough improvement to install

IV cont

Ⓑ More time spent on Piggy Back board Power Supply decoupling may be helpful

② Resolution output not operating properly more time needed to investigate.

20 May 81
AP

Calibration Procedure Changes
CM 067-0838-98
High Amplitude Line Scan Signal Generator

① If this is a raw instrument then pre-set pots on PIGGY-BACK board to mid-range.
② R99 on MAINBOARD full CW, all other pot mid-range.
③ The entire procedure should be gone through several times befor instrument is shipped.

Procedure Change
(JE on, Ref. mode)

Step 9 Adj. R296 This may be short or rang- and changing U267 or Q263 may be necessary.

Step 12-14 Adj. R4, R5, R6 These are not real critical. (We are not concerned wi the front pannel Ramp amplitude va

Step 34 Adj. R351 For base line of 0.0V at (P1-3) on PIGGY-BACK board.

20 May 81
DP

Step 36 Be Shure to be in the JE Mode.

① This step is best done by switching between GRAY SWEEP and 5.0V.

② Adj. GA & GD to form a ramp wave for with 0.0V Pedistal (GRAY SWEEP position

③ Adj. R254 and R397 while switching between GRAY SWEEP and 5.0V to obtain a 5V ramp and a 5V Pulse. (There will be interaction with GA & GD

④ Repeat the above steps as needed.

Step 38 Adj. R99 Max. CW. Check frequency for 2MHZ (period 0.5ms) and duty cycle of 25%.

Forget the rest of Step 38 RESOLU will not work properly.

Step 41 & 42 Forget

Step 43 Be Shure to be in JE Mode

Step 44 Connect Scope Probe to Generator X-Out connector center conductor. Prob ground to Z-out ground

20 May 81
AY

This concludes the calibration in the J_E mode.

Step 50 USE Fig. 1. Adj. JE-XA

Step 51 USE Fig. 1 Adj. JT-GD-GA-XA

Step 52 USE Fig. 1 Adj. VA-GD-GA-XA

Step 53 Repeat above steps (50-52)

Repeat entire procedure as required.

This completes the calibration of the Generator.

4633A MOD ___
TEST FIXTURE
CALIBRATION PROCEDURE

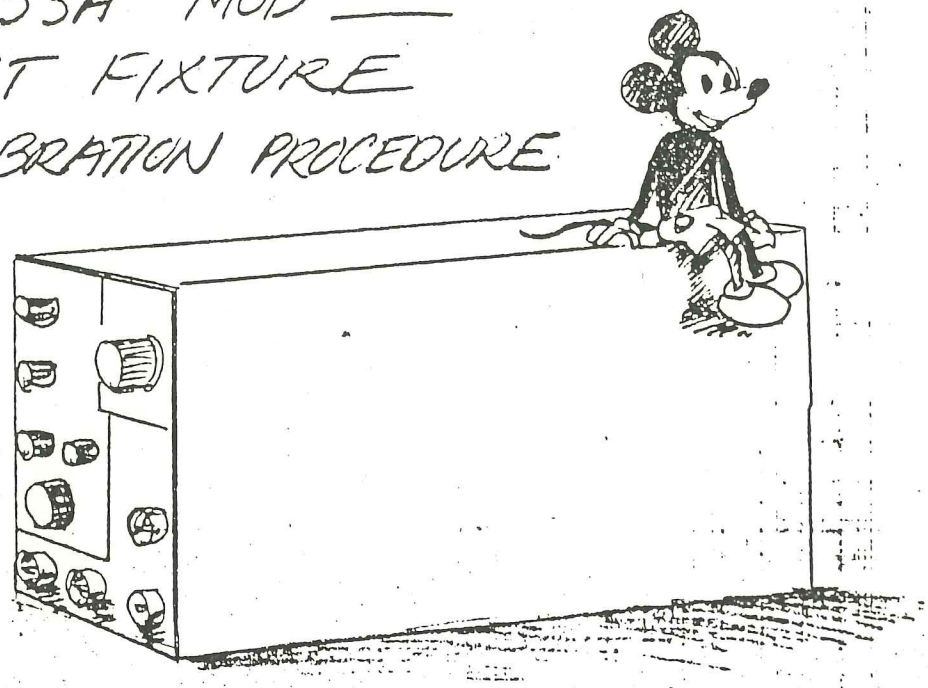

MOD	Z PEDESTAL (GD)	Z RANGE (GA)	X PEAK (XA)
JE	0	5	3 ±
VA	1	1	8 ±
JT	2.2	2.2	8 ±
JL, JR	1	4	5

Fig. 1

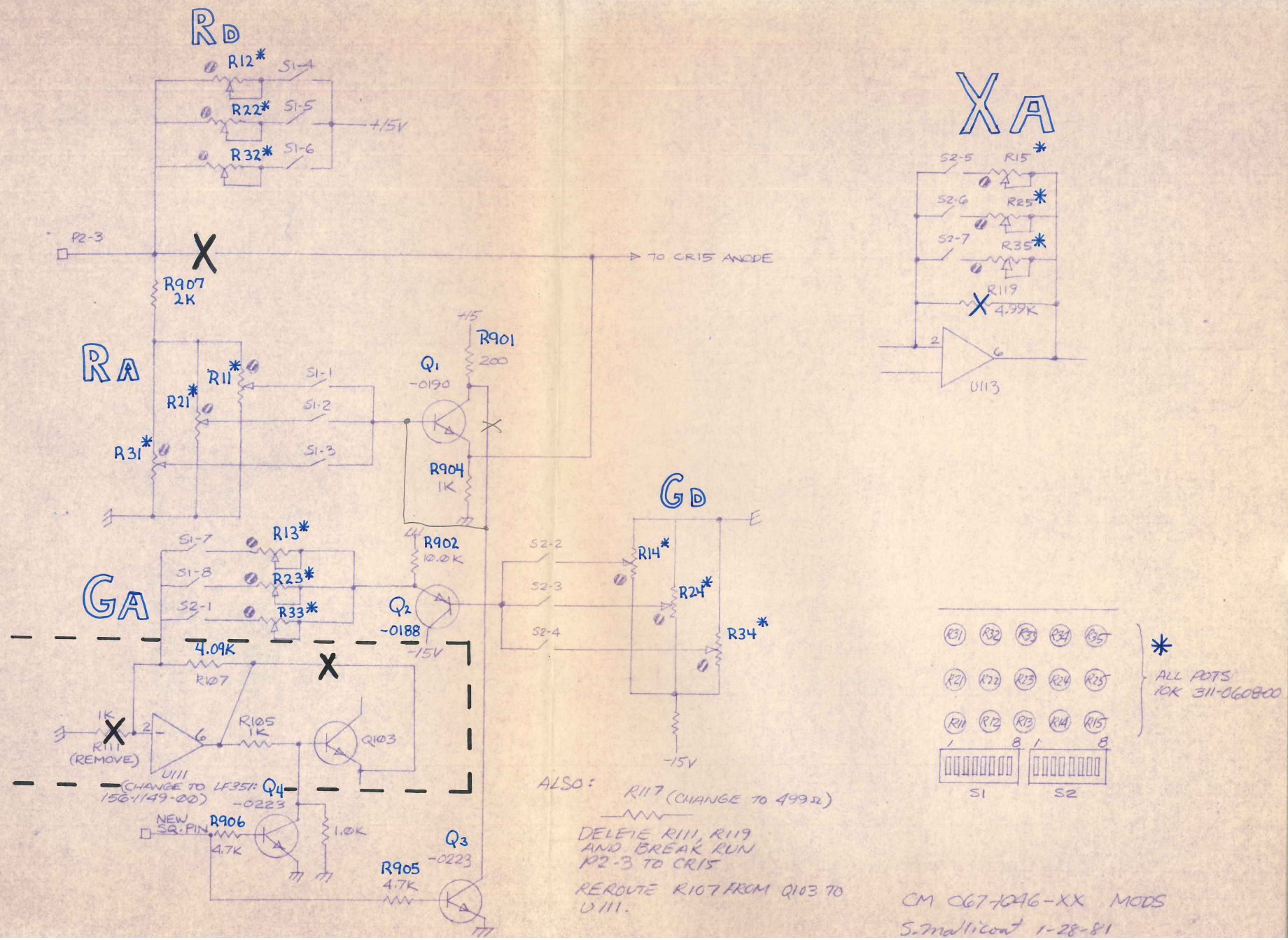
RD
R12*
S1-4
R22*
S1-5
R32*
S1-6
+15V
P2-3
R907
2K
TO CR15 ANODE
RA
R11*
R21*
R31*
S1-1
S1-2
S1-3
+15
R901
200
Q1
-0190
R904
1K
R902
10.0K
S1-7
S1-8
S2-1
R13*
R23*
R33*
GA
Q2
-0188
-15V
4.09K
R107
1K
R111
(REMOVE)
U111
R105
1K
Q103
(CHANGE TO LF351: 156-1149-00)
Q4
-0223
NEW SQ. PIN
R906
4.7K
1.0K
Q3
-0223
R905
4.7K
GD
S2-2
S2-3
S2-4
R14*
R24*
R34*
E
-15V
XA
S2-5
S2-6
S2-7
R15*
R25*
R35*
R119
4.99K
U113
R31 R32 R33 R34 R35
R21 R22 R23 R24 R25
R11 R12 R13 R14 R15
S1
S2
ALL POTS 10K 311-0608-00
ALSO:
R117 (CHANGE TO 499Ω)
DELETE R111, R119 AND BREAK RUN P2-3 TO CR15
REROUTE R107 FROM Q103 TO U111.
CM 067-1046-XX MODS
S. Mallicoat 1-28-81

INSTRUCTION
MANUAL

CUSTOM MOD

Copyright © 1980 by Tektronix, Inc., Beaverton, Oregon. Printed in the United States of America. All rights reserved. Contents of this publication may not be reproduced in any form without permission of Tektronix, Inc.

U.S.A. and foreign TEKTRONIX products covered by U.S. and foreign patents and/or patents pending.

TEKTRONIX is a registered trademark of Tektronix, Inc.

CM 067-0838-98

High Amplitude Line Scan Signal Generator

(Preliminary Survival)

Tektronix, Inc. • P.O. Box 500 • Beaverton, Oregon 97077 • Phone 644-0161 • Cables: Tektronix

061-2328-00 Issued 2/80 RDH

NOTE TO OUR CUSTOMERS

This is a special product. Because of its custom nature, we may have used some non-standard parts in its design. Since these parts require special ordering, you may experience delay in the repair of your product.

To keep such delays to a minimum, be sure an Identification Tag is attached to the instrument:

THIS:

OR:

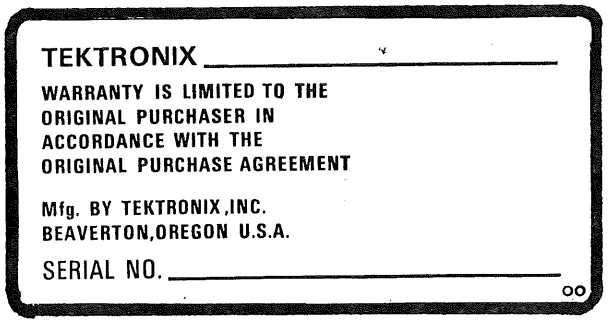

If you are installing your own modification, this tag is supplied in your kit. Attach it *near the serial number* of the instrument you have modified. This immediately notifies our Service Technician that your product needs special repair and ordering attention.

LIST OF REPLACEABLE PARTS

This section provides a survival list of Chassis and Electrical parts for the CM 067-0838-98 High Amplitude Line Scan Signal Generator. These parts may be ordered through Tektronix, Inc.. This part listing is broken into the following divisions:

CHASSIS ASSEMBLY PARTS LIST

MAINBOARD ELECTRICAL PARTS LIST

PIGGYBACK ELECTRICAL PARTS LIST

CHASSIS ASSEMBLY

Circuit No. or Quantity	Description	Part Number
1	ECB Mainboard	CM 670-6949-00
1	ECB Piggyback	CM 670-6837-00
1	Panel, Front	CM 333-1483-10
1	Sub Panel, Front	CM 386-2402-15
1	Frame Section, Bottom	CM 426-0724-22
1	Frame Section, Top	CM 426-0725-23
2	Shield, Side Covers	337-1399-00
2	Knob, Large Gray	366-1028-00
4	Knob, Small Gray	366-1209-00
1	Knob, Latch	366-1422-01
1	Switch, Pushbutton, Remote Record	260-0247-00
1	Switch-Rotary, Slew Rate	260-1139-00
1	SP1212, Ramp Amplitude	260-2045-00
1	SP1213, Z-AXIS Control	260-2046-00
1	BNC Connector, X-OUT	131-0247-00
3	BNC Connector, Z-OUT, Blanking, Remote Record	131-0955-00
1	Electrical Shield, Front Panel	CM 200-1273-09
3	Solder Lug, (locking), BNC	210-0255-00
1	Spring	214-1061-00
1	Latch	214-1513-01
1	Pin Latch	214-1840-00
2"	Bare Wire #22	176-0121-00
5"	Teflon Insulation	162-0025-00
2	Spacer Posts, 1"	129-0089-00
2	Mounting Blocks	

CHASSIS ASSEMBLY PARTS LIST (cont.)

Circuit No. or Quantity	Description	Part Number
6	Screw, 6-32 X .312	211-0507-00
2	Screw, 6-32 X .312	211-0538-00
2	Screw, 6 X .313	213-0146-00
4	Screw, 6 X .375	213-0229-00
1	Screw, 2-56 X .250	213-0254-00
7	Nut	210-0583-00
4	Nut	210-0590-00
5	Washer	210-0940-00
2	Washer	210-0978-00
1	Cable Kit, Wire Kit	198-3955-00
1	Cable Kit, 8 Cond - Orange Housing	175-5156-00
1	Cable Kit, 7 Cond - Black Housing	175-5158-00
1	Cable Kit, 6 Cond - Brown Housing	175-5157-00
1	Cap .47 uh	283-0134-00
1	100 K 10% Pot, Rep Rate	311-0467-00
1	2 K W/Switch Pot, Variable	311-0632-00
1	10 K Pot, Ramp Bias	311-1104-00
3	2 K	311-1265-00
1	Res 1.5 K 1/4 W 5%	315-0152-00
1	Res 4.7 K	315-0472-00
1	Res 75 ohm	315-0750-02
1	Res 750 ohm	315-0751-00
1	Res 2.43 K 1/8 W 1%	321-0230-00
1	Res 3.09 K	321-0240-00
1	Res 4.02 K	321-0251-00

This concludes the Chassis Assembly Parts List

CM 067-0838-98
High Amplitude Line Scan Signal Generator

LIST OF REPLACEABLE PARTS

CM 670-6949-00 MAINBOARD

Circuit No. or Quantity	Description	Part Number
J1,2,3	Square Pins	131-0608-00
U75,151,175	Socket, 16 Pin	136-0260-02
U41,45,51,55, 65,135,145,155, 165,185,285	Socket, 14 Pin	136-0269-02
U354,385	Socket, 8 Pin	136-0514-00
U155	I.C. 7472	156-0038-00
U41,51,55	I.C. 7473	156-0039-00
U267,354,385	I.C. 741C	156-0067-00
U285	I.C. 7416	156-0093-00
U65	I.C. 7408	156-0129-00
U125	I.C. 7815	156-0312-00
U240	I.C. HA2625	156-0317-00
U325	I.C. 7805	156-0277-00
U75	I.C. MK5009	156-0410-00
U165	I.C. 74LS32	156-0749-00
U335	I.C. 7915	156-0527-00
U185	I.C. 74177	156-0536-00
U135	I.C. 74LS93	156-0646-00
U45,145	I.C. 74LS90	156-0656-00
U175	I.C. 74LS221	156-0733-00
U151	I.C. 74LS153	156-0798-00
Q95,96,263	Transistor	151-0188-00
Q241	Transistor	151-0223-00
Q394	Transistor	151-0302-00
Q76	Transistor	151-1055-00
CR292,293, 294,365,366	Diode	152-0141-02
VR89	Diode, Zener, 10V	152-0149-00
VR342	Diode, Zener, 5.6V	152-0175-00
VR295	Diode, Zener, 5.1V	152-0226-00
VR91	Diode, Zener, 3V	152-0278-00
245,345	Relay	148-0086-01
C93,291,391	Cap .01uf	283-0204-00
C395	Cap 1uf	283-0317-00
C89,91	Cap 43pf	283-0600-00
C170	Cap 62pf	283-0629-00
C318	Cap 2.2 uf	290-0136-00
C218,219	Cap .47uf	290-0283-00
C130,315,334	Cap 10uf 25V	290-0290-00

MAINBOARD PARTS LIST (cont.)

Circuit No. or Quantity	Description	Part Number
C92,178,192, 193,194,240, 241,250,255, 265,275,276, 277,351,355, 364,374,375, 390,399	Cap .01 uf	281-0773-00
C40,50,53,63, 140,163,336, 343	Cap .1uf	281-0775-00
C341	Cap 100pf	283-0060-00
C96,252	Cap .001uf	283-0067-00
C242	Cap .01uf 1%	283-0593-00
R95	Res 75ohm	301-0750-00
R98	Res 200ohm, 5% 1/2W	301-0201-00
R92,194,195, 196,250,252, 275,356,364, 375,388,392	Res 100ohm	315-0101-00
R189,391	Res 1K	315-0102-00
R251,341	Res 10K	315-0103-00
R335	Res 100K, 5% 1/4W	315-0104-00
R265	Res 1.1K	315-0112-00
R177,343	Res 1.5K	315-0152-00
R91	Res 15K	315-0153-00
R255	Res 18K	315-0183-00
R77	Res 20K	315-0203-00
R353	Res 2.7K	315-0272-00
R78	Res 24K	315-0243-00
R67,70,133, 150,153,167, 176,188,190, 191,192	Res 3K	315-0302-00
R43	Res 33ohm	315-0330-00
R365,366	Res 3.6K	315-0362-00
R337	Res 36K	315-0363-00
R352	Res 390ohm	315-0391-00
R339	Res 62K	315-0623-00
R398	Res 7.5K	315-0752-00
R376	Res 910ohm	315-0911-00
R90	Res 12M, 10%, 1/4W	316-0126-00
R244	Res 187K	321-0411-00
R199	Res 51 Ω	315-0510-00

MAINBOARD PARTS LIST (cont.)

Circuit No. or Quantity	Description	Part Number
R89	Res 18M	316-0186-00
R93	Res 16.2ohm	321-0021-00
R264	Res 348ohm, 1%,1/8W	321-0149-00
R215	Res 511ohm	321-0165-00
R276	Res 866ohm	321-0187-00
R97	Res 3.32K	321-0243-00
R377	Res 1.30K, 1%, 1.8W	321-0204-00
R96	Res 11K	321-0293-00
R290	Res 14K	321-0303-00
R344	Res 18.7K	321-0315-00
R378	Res 20K	321-0318-00
R291	Res 28K	321-0332-00
R217	Res 35.7K	321-0342-00
R243	Res 37.4K	321-0344-00
R288	Res 56.2K	321-0361-00
R94	Res 34.8ohm	323-0053-00
R254	Var Res 5K	311-0633-00
R99	Var Res 1K	311-1225-00
R253	Var Res 5K	311-1227-00
R235,351	Var Res 10K	311-1228-00
R296	Var Res 25K	311-1231-00
R367	Var Res 500ohm	311-1168-00
R397	Var Res 250ohm	311-1260-00
Y85	Crystal, 2MHZ	158-0070-01
U125,325,335	Heatsink	214-1967-00
3	#6 Nut	210-0407-00
3	Washer	210-1160-00
3	Screw	211-0507-00
3/8"	Insulation	162-0025-00

This concludes the Mainboard Parts List

CM 067-0838-98
High Amplitude Line Scan Signal Generator

LIST OF REPLACEABLE PARTS

CM 670-6837-00 PIGGYBACK

Circuit No. or Quantity	Description	Part Number
J1,2,3	Square Pins	131-0608-00
3	Heatsink	214-0498-00
K13	Relay, Dip	148-0086-01
K111,113	Relay, Dip	148-0076-00
C11	Cap 56pf, 600V	281-0521-00
C13,15,19, 113,115	Cap .01uf, 150V	283-0003-00
CR15,111,113, 115,117	Diode	152-0141-02
U13	I.C. 74LS93	156-0646-00
U11	I.C. 74LS90	156-0656-00
U111,113	I.C. 1458	156-0067-00
Q13	Transistor	151-0301-00
Q11,103	Transistor	151-0302-00
R17	Res 10ohm, 5%,1/2W	301-0100-00
R15	Res 15ohm, 5%, 1/2W	301-0150-00
R103	Res 51ohm, 5%, 1/2W	301-0510-00
R105	Res 1K, 5%, 1/4W	315-0102-00
R115	Res 51ohm, 5%, 1/4W	315-0510-00
R121	Res 75ohm, 5%, 1/4W	315-0750-00
R11,19,109	Res 7.5K 5%, 1/4W	315-0752-00
R113	Res 806ohm, 1%,1/8W	321-0184-00
R123	Res 825ohm 1%, 1/8W	321-0185-00
R111,117	Res 1K, 1%, 1/8W	321-0193-00
R107	Res 4.02K, 1%, 1/8W	321-0251-00
R119	Res 4.99K	321-0260-00
R13	Res 50ohm, 1%, 1/2W	323-0626-00

This concludes CM 067-0838-98 Replacable Parts List.

CALIBRATING THE CM 067-0838-98 HIGH AMPLITUDE LINE SCAN SIGNAL GENERATOR

TEST EQUIPMENT REQUIRED

NOTE

Tektronix, Inc. manufactured items are used as the basis for this calibration procedure. Appropriate substitutions may be made with corresponding procedural changes.

1. 1 ea dual trace Oscilloscope with a vertical deflection of .2uV/DIV to 1V/DIV, a sweep rate of .2us/DIV to 1s/DIV, and a bandwidth of 50 MHZ. (TEKTRONIX 465 is recommended.)

2. 1 ea TEKTRONIX TM500 Series Power Module/Mainframe.

3. 1 ea Digital Multimeter with probes. Readout: 4 1/2 digits. DC voltage measurement accuracy: 0.1%. Resolution: 100uV on 2V range. (TEKTRONIX DM501 is recommended.)

4. 1 ea TM500 flexible extender cable TEK P. N. 067-0645-02.

5. 2 ea 50ohm cables TEK P. N. 012-0057-01.

6. 1 ea 50ohm terminator TEK P. N. 011-0049-01.

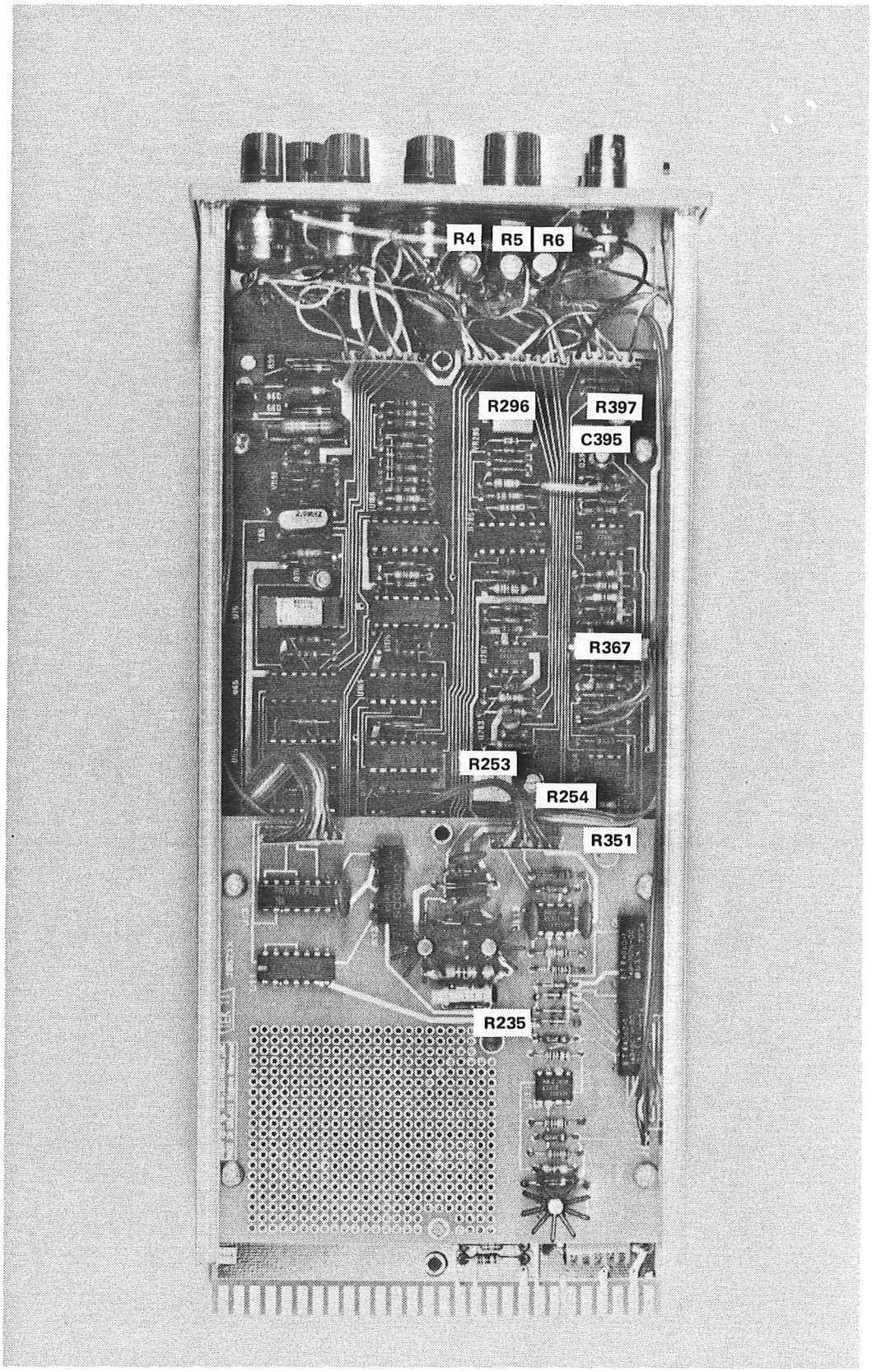
R4
R5
R6
R296
R397
C395
R367
R253
R254
R351
R235

TESTS AND ADJUSTMENTS

CAUTION

Always turn power off before removing or inserting instruments from the TM500 Mainframe.

1. Insert the extender cable into the TM500 Mainframe and connect the Generator (067-0838-98) to the extender cable. Be sure to remove the side panels from the Generator.

2. Set the Oscilloscope TIME/DIV control to 0.5ms/DIV, the Trigger Mode to AUTO, and the Trigger Source to CH 1. Set the channel 1 VOLTS/DIV control to 0.2mV/DIV, the channel 1 VERTICAL INPUT COUPLING switch to GND, and center the POSITION control. Set the channel 1 VERTICAL INPUT COUPLING switch to DC.

3. Connect the 50ohm cable from the X-OUT connector on the Generator to the channel 1 Vertical Input connector on the Scope.

4. Turn the Generator RAMP BIAS control all the way clockwise, the SLEW RATE control to 100us, and the Z-AXIS control to GRAY SWEEP.

NOTE

Refer to Figure 1 for the location of all Generator adjustments.

5. Adjust R235 on the Generator so that the base of the ramp is at 0.0 Volts

6. Set the Scope VOLTS/DIV control to 1V/DIV.

7. Rotate the Generators RAMP BIAS control counterclockwise until it locks in the detent position. Adjust R253 so that the ramp base is -3.0 Volts.

8. Set the Scope VOLTS/DIV control to 2V/DIV.

9. Click the Generators RAMP BIAS control out of detent leaving it turned as far counterclockwise as possible without going back into detent. Adjust R296 so that the base of the ramp is at -6.0 Volts.

10. Set the Scope channel 1 VERTICAL INPUT COUPLING switch to GND. Set the VOLTS/DIV control to 1V/DIV. Adjust the VERTICAL POSITION control to place the trace at the bottom line of the Graticule. Set the channel 1 VERTICAL INPUT COUPLING switch to DC.

11. Rotate the Generators RAMP BIAS control all the way clockwise.

12. Place the Generators RAMP AMPLITUDE control to 4.50 Volts. Adjust trim pot R6 for a ramp amplitude of 4.50 Volts.

13. Place the Generators RAMP AMPLITUDE control to 6.00 Volts. Adjust trim pot R5 for a ramp amplitude of 6.00 Volts.

14. Place the Generators RAMP AMPLITUDE control to 7.50 Volts. Adjust trim pot R4 for a ramp amplitude of 7.50 Volts.

15. Set the Scope VOLTS/DIV control to 2V/DIV.

* 16. Set the Generators RAMP AMPLITUDE control to the VARIABLE position and rotate the corresponding front panel adjustment control in both directions. The signal level as seen on the Scope should vary from 0.0 Volts at full counterclockwise to greater than 12 Volts peak-to-peak at full clockwise.

17. Set the Generators RAMP AMPLITUDE control to the 6.00 Volts position.

18. Set the Scope TIME/DIV control to .1ms/DIV.

* 19. Set the Generator SLEW RATE control to 45us. The ramp time should be 45us.

* 20. Set the Generator SLEW RATE control to 100us. The ramp time should be 100us.

* 21. Set the Generator SLEW RATE control to 500us. The ramp time should be 500us. During the last three checks there should not have been more than a 50mV difference in the amplitude of the ramp between the three slew rates.

22. Set the Generator SLEW RATE control to 100us.

23. Set the Scope TIME/DIV control to 0.5ms/DIV.

* 24. Turn the Generator RPTN RATE control from full counterclockwise to full clockwise. The ramp period should vary from less than 0.5ms/Cycle to greater than 1.0ms/Cycle.

25. Connect the second 50ohm cable between the Scope channel 2 Vertical Input connector and the Generator BLANKING connector.

* 26. Set the Scope VERTICAL MODE switch to ALT. Set the channel 1 and 2 VOLTS/DIV controls to 1V/DIV. Check that a TTL high occurs which is coincident with, and of the same duration and period as, the ramp of the X-OUT output.

27. Set the Scope TIME/DIV control to 1ms/DIV.

* 28. Set the Generator Z-AXIS control to RESOLUTION. The blanking signal should go high for 5 consecutive ramps at X-OUT, then stay low for 5 ramps.

29. Set the Scope VERTICAL MODE switch to channel 1 and the TIME/DIV control to 0.5ms/DIV.

30. Disconnect the 50ohm cable from the channel 2 Vertical Input connector and the BLANKING connector.

31. Remove the 50ohm cable from the Generator X-OUT connector and connect it to the Z-OUT connector. Attach the 50ohm terminator to the other end of the cable and reconnect it to the Scope.

32. Set the Generator Z-AXIS control to GRAY SWEEP.

33. Set the Scope VOLTS/DIV control to 2V/DIV.

34. Adjust R351 on the Generator so that the base of the ramp is at 0.0 Volts. Overshoot on the falling side of the ramp is permissible.

35. Set the Scope VOLTS/DIV control to 1V/DIV.

36. On the Generator adjust R254 for a ramp amplitude of 5.00 Volts.

37. Set the Scope TIME/DIV control to 0.2us/DIV.

38. Set the Generator Z-AXIS control to RESOLUTION. Adjust R99 so that the pulse amplitude is 5.0 Volts. The frequency of the pulses should be 2MHZ (a period of 0.5us) with a duty cycle of approximately 25%.

39. Set the Generator Z-AXIS control to GND.

40. Place the DMM HI probe on the lead of C395, the LO probe on the Z-OUT connector ground. Set the RANGE/FUNCTION control to the lowest DC Volts position and adjust R367 so that the DMM reads 0.0 Volts (within ± 0.5mv.)

41. Set the DMM RANGE/FUNCTION control to 20 V DC. Place the HI probe on the Generator Z-OUT output. The LO probe remains on the Z-OUT connector ground.

42. Set the Generator Z-AXIS contol to the 5.0 Volt position. Adjust R397 for 5.00 Volts on the DMM (within ± 0.5mv.)

* 43. Set the Generator Z-AXIS control to the GRAY STEP position. Note the variation from 0.0 Volts to 5.0 Volts in 8 discrete steps, each of one second duration. An alternate method for observing the above is to set your Scope TIME/DIV control to 1s/DIV, set the VOLTS/DIV control to 1V/DIV and connect the 50ohm cable to the Z-OUT connector.

44. Connect the ~~50ohm cable~~ Scope probe to the Generator ~~Z~~ X-OUT connector, center conductor. Connect the probe ground to the Z axis output ground.

45. Set the Scope TRIGGER MODE to LINE and the VOLTS/DIV control to .5V/DIV.

* 46. Set the Generator RAMP AMPLITUDE control to the CMR TEST position. A Sine wave of approximately 1 Volt peak-to-peak should be observed.

47. Return the Generator RAMP AMPLITUDE control to the 6.0 Volt position.

48. Set the DMM RANGE/FUNCTION control to the OHMS position.

* 49. Place one DMM probe on each side of the Generator REMOTE RECORD connector. You should read an open, push the REMOTE RECORD button and you should read a short.

* Indicates a performance check only and no adjustment should be necessary. If the instrument does not pass one of these performance checks, trouble-shooting may be needed to determine the reason.

This concludes the calibration procedures for the CM 067-0838-98 High Amplitude Line Scan Signal Generator.