INSTRUCTION MANUAL

Serial Number _____

021–0008–00

R1340 TO PDP–8/L

INTERFACE PACKAGE

Tektronix, Inc. ● P. O. Box 500 ● Beaverton, Oregon 97005 ● Phone 644-0161 ● Cables: Tektronix

070-3049-00

WARRANTY

All Tektronix instruments are warranted against defective materials and workmanship for one year.

Any questions with respect to the warranty, mentioned above, should be taken up with your Tektronix Field Engineer or representative.

All requests for repairs and replacement parts should be directed to the Tektronix Field Office or representative in your area. This procedure will assure you the fastest possible service. Please include the instrument Type (or Part Number) and Serial or Model Number with all requests for parts or service.

Specifications and price change privileges reserved.

Copyright © 1971 by Tektronix, Inc., Beaverton, Oregon. Printed in the United States of America. All rights reserved. Contents of this publication may not be reproduced in any form without permission of the copyright owner.

U.S.A. and foreign Tektronix products covered by U.S. and foreign patents and/or patents pending.

TABLE OF CONTENTS

Introduction 1
PDP-8/L Device Selector Circuit Description 2

FOLDOUT 1

Front

PDP-8/L Device Selector Card Illustration
PDP-8/L Device Selector Schematic Diagram ◇1

Back

PDP-8/L Device Selector Electrical Parts List

FOLDOUT 2

Front

PDP-8/L Device Selector Schematic Diagram ◇2

Back

Data From PDP-8/L Electrical Parts List
Data From PDP-8/L Circuit Description

FOLDOUT 3

Front

Data From PDP-8/L Card Illustration
Data From PDP-8/L Schematic Diagram

Back

Data To PDP-8/L Electrical Parts List
Data To PDP-8/L Circuit Description

FOLDOUT 4

Front

Data To PDP-8/L Card Illustration
Data To PDP-8/L Schematic Diagram

Back

Mechanical Parts List
Mechanical Parts List Illustration

INTRODUCTION

The 021-0008-00 Interface Kit is intended for use with a Digital Equipment Corp. PDP-8/L. The kit permits computer-controlled data exchange among assemblies installed in the R1340. It is used in the R1340 for operation with all Tektronix Automated Systems.

The kit has the following parts:

Description	Tektronix Part No.
A3 Device Selector PDP-8/L	670-1261-00
A4 Data From PDP-8/L	670-1272-00
A5 Data To PDP-8/L	670-1271-00
Interconnecting Cable	012-0260-00
Interconnecting Cable	012-0261-00
Interconnecting Cable	012-0262-00
Instruction Manual	070-3049-00

A3 PDP-8/L DEVICE SELECTOR

Instructions from the PDP-8/L computer control the R1340 functions. Integrated circuits (I.C.'s) U20, U25, U55, and U60 decode the PDP-8/L device code instructions and send them to the appropriate circuit card in the R1340. When selected circuit card is "Ready" and the computer generates an IOP1 pulse, a $\overline{\text{SKIP}}$ signal is generated which causes the computer to skip the next programmed instruction.

The Device Selector circuit is allowed to operate only when the R1340 Mode switch is in the A position (called SYSTEM CONTROL on R1340 Mod 950A). The $\overline{\text{MODE A}}$ signal is low during this time.

When either the $\overline{\text{READER READY}}$ or the $\overline{\text{PUNCH READY}}$ signals go low, U15A drives Q15 to generate the $\overline{\text{INTERRUPT}}$ signal. An $\overline{\text{INTERRUPT}}$ signal is also generated when $\overline{\text{J7-B2 READY}}$ goes low if the J7 Interrupt On flip-flop (FF) is set. The J7 Interrupt On FF is set and cleared by computer instructions.

The INTERRUPT signal causes the computer to stop executing its present program and start following a second program which services the device that "interrupted."

COMPUTER INSTRUCTION LIST

Computer Instruction Number	Function: R1340	Function: Tektronix Automatic Measurement System R1340 Mod 950A
601_	Selects J4-B47	Tape Reader
602_	Selects J4-A47	Tape Punch
630_	Selects J7 Interrupt FF	Selects J7 Interrupt FF
631_	Selects J6-B47	Disc Test Address
632_	Selects J6-A47	Disc Test Address
633_	Selects J7-B47	Measurement Number
634_	Selects J10-B37	Type 230 Data
635_	Selects J10-A47	Type 230 Data
636_	Selects J5-B47	Type 240 Tape Channel Out
637_	Selects J5-A47	Type 240 Tape Channel In
640_	Selects J8-B47	Header Data
641_	Selects J8-A47	Header Data
642_	Selects J9-B47	Header Data
643_	Selects J9-A47	Header Data
644_	Selects J11-B47	Functional Test Out
645_	Selects J11-A47	Functional Test Out
646_	Selects J12-B47	Functional Test In
647_	Selects J12-A47	Functional Test In

The Device Codes listed above may be changed by changing the connections of the jumpers on the output of U20 to provide the desired new Device Code.

Computer Instruction Number	Purpose
6__1	An instruction in this format causes the computer to skip the following instruction if the card selected by the two middle digits of the instruction is READY.
6__2	This instruction is usually used to transfer the less significant eight bits of a sixteen bit word to or from the PDP-8/L computer.
6__4	An instruction whose least significant digit is a "4" is usually used to transfer the more significant eight bits of a sixteen bit word to or from the PDP-8/L computer.

The Ready lines from J4-B47 and J4-A47 (usually used for the High Speed Reader and the High Speed Punch) drive flip-flops (FF) which activate the PDP-8/L Interrupt line. An Interrupt Enable FF is also provided to allow the J7-B2 $\overline{\text{READY}}$ signal to initiate an interrupt. The PDP-8/L $\overline{\text{INITIALIZE}}$ signal clears these three FF's.

If the Paper Tape Reader, Punch Interface card is installed in J4, the Reader and Punch respond to High Speed Reader or High Speed Punch programs furnished by Digital Equipment Corp.

PDP8—R1340 MOD 950A INSTRUCTIONS

SELECT		
P-4 B47	6011	Skip on reader flat (J4-B2)
	6012	Input data from the reader (buffer!)
	6014	Advance reader, clear the flag
P4 A47	6021	Skip on punch flag (J4-A2)
	6022	Clear punch flag
	6024	Load buffer and punch character
P7 A47	6301	Skip on system (240) ready (J7-A2)
	6302	230 interrupt off
	6304	230 interrupt on
P6 B47	6311	Card has no Ready
	6312	Clear stop FF
	6314	Output 240 address more significant byte
P6 A47	6321	Card has no Ready
	6322	Set stop FF
	6324	Output 240 address less significant byte; start 240
P7 B47	6331	Skip on log ready (J7-B2)
	6334	Input measurement number more sig. byte; set 230 hold
	6332	Input measurement number less sig. byte
P10 B47	6341	Card has no Ready
	6344	Input 230 data more sig. byte
	6342	Input 230 data less sig. byte
P10 A47	6351	Card has no Ready
P10 A47	6354	Input 230 more sig. byte
	6352	Input 230 less sig. byte/clear 230 hold
P5 B47	6361	Skip on 240 tape out ready (J5-B2)
	6362	Input 240 data
	6364	Clock 240 tape out

SELECT		
P5 A47	6371	Skip on 240 tape in ready (J5-A2)
	6372	Not used
	6374	Output data, clock 240 tape in
P8 B47	6401	Skip on header ready (J8-B2)
	6404	Input header more sig. byte
	6402	Input header less sig. byte
P8 A47	6411	Skip on data ready (J8-A2)
P8 A47	6414	Input header more sig. byte
	6412	Input header less sig. byte
P9 B47	6421	Skip on J9-B2 ready
	6424	Input header more sig. byte
	6422	Input header less sig. byte
P9 A47	6431	Skip on J9-A2 ready
	6434	Input header more sig. byte
	6432	Input header less sig. byte
P11 B47	6441	Skip on J11-B2 ready
	6442	Output function force, less sig. byte
	6444	Output function force, more sig. byte
P11 A47	6451	Skip on J11-A2 ready
	6452	Miscellaneous control functions
	6454	When output with certain data bits
P12 B47	6461	Skip on function DUT word ready (J12-B2)
	6462	Input less sig. byte DUT word
	6464	Input more sig. byte DUT word
P12 A47	6471	Skip on function test enabled (J12-A2)
	6472	Output force enable less sig. byte
	6474	Output force enable more sig. byte

NOTES

021-0008-00 (R1340)

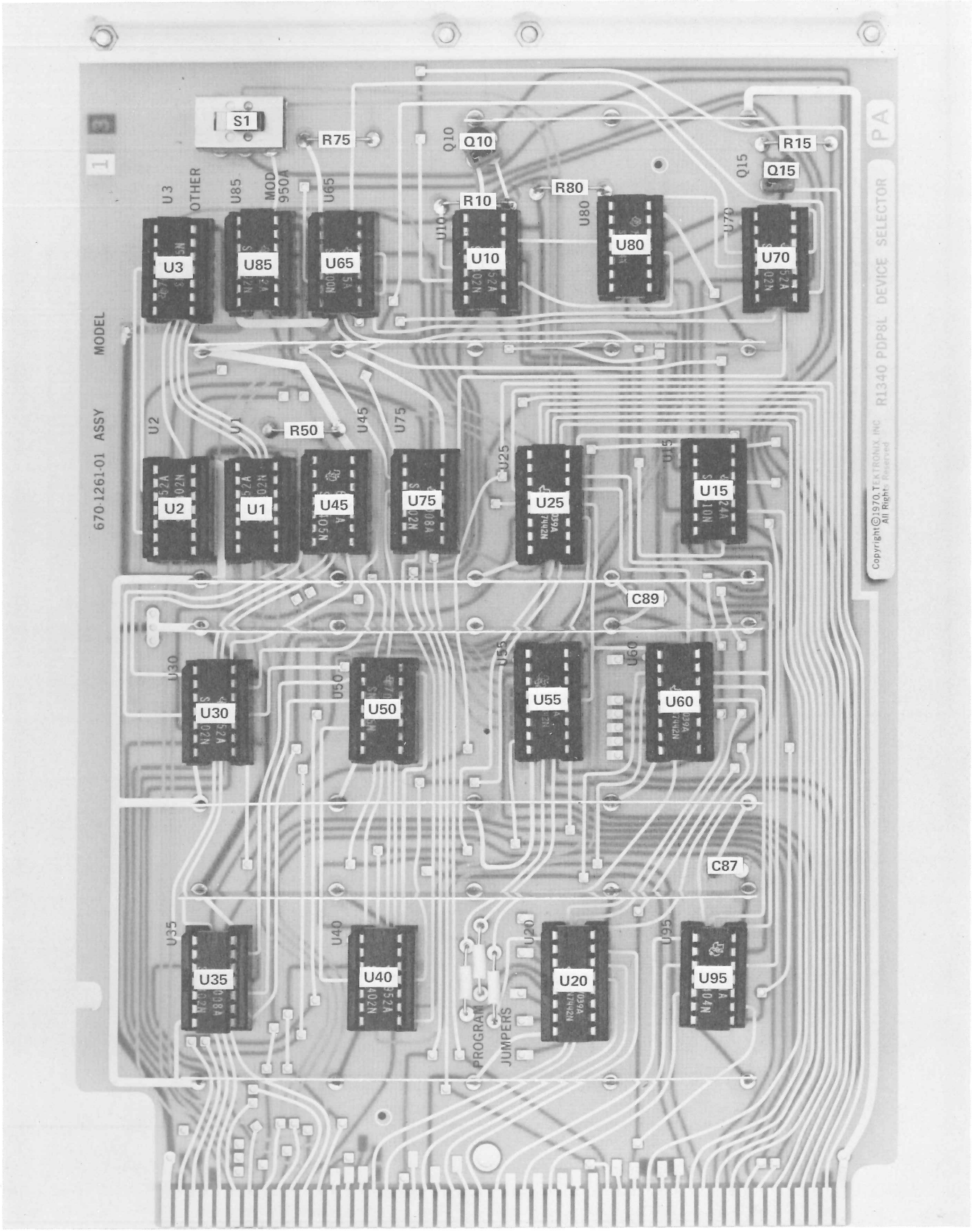

Ⓐ

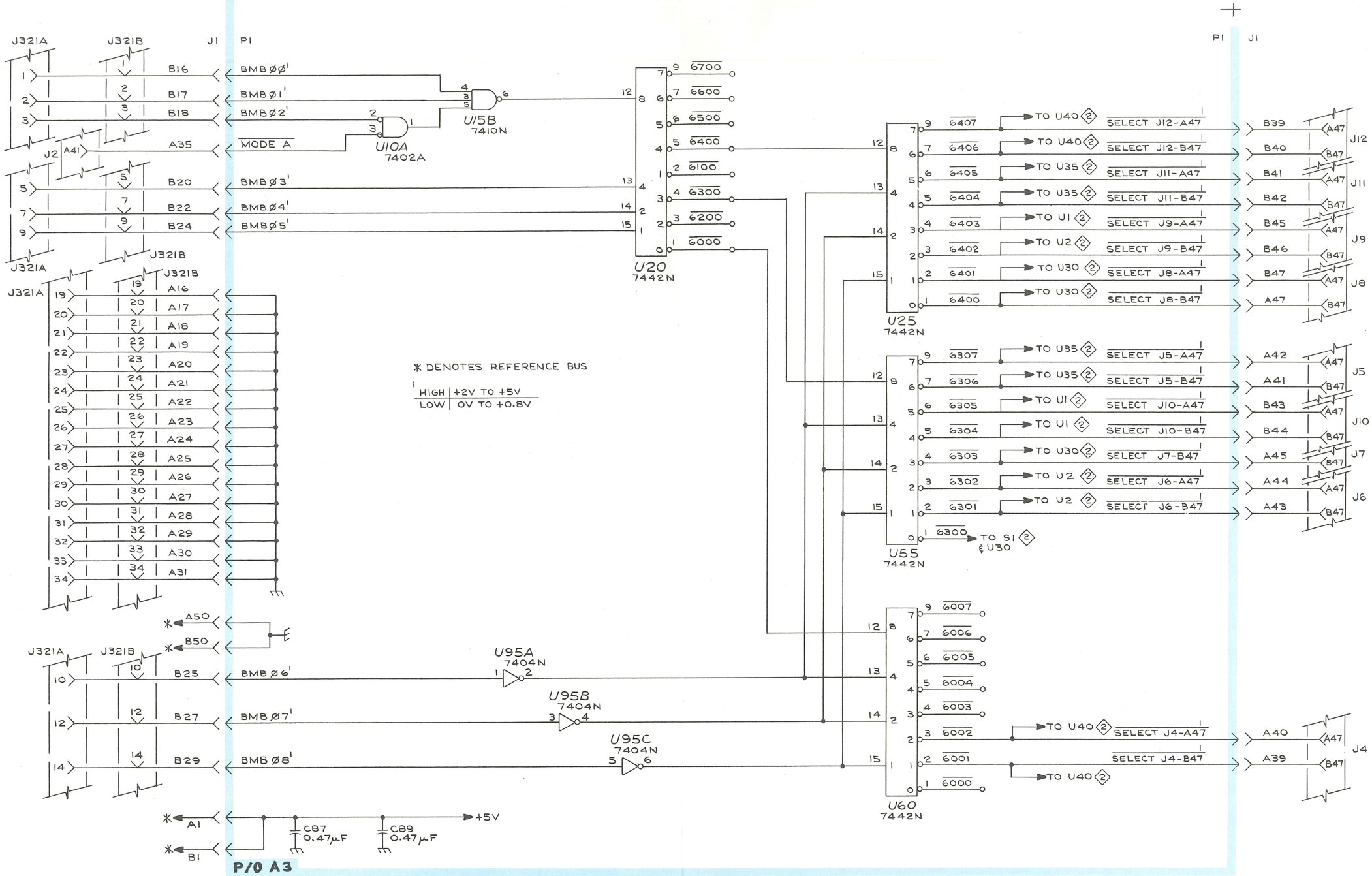

021-0008-00(R1340)

A

GRS
0371
PDP8L DEVICE SELECTOR 1

A3 DEVICE SELECTOR Circuit Board Assembly

	*670-1261-01	Complete Board

Capacitors

Tolerance ±20% unless otherwise indicated.

C87, C89	283-0203-01	0.47 μF	Cer	50 V	

Transistors

Q10, Q15	151-0190-00	Silicon	NPN	TO-92	2N3904

Resistors

Resistors are fixed, composition, ±10% unless otherwise indicated.

R10, R15, R80	315-0102-00	1 kΩ	1/4 W	5%
R50	315-0471-00	470 Ω	1/4 W	5%
R75	315-0472-00	4.7 kΩ	1/4 W	5%

Switch

Wired or Unwired.

S1	260-0723-00	Slide

Integrated Circuits

U1, U2, U10, U30, U35, U40, U70, U75, U85	156-0043-00	Quad 2-input NOR gate. Replaceable by T.I. SN7402N
U15	156-0047-00	Triple 3-input gate. Replaceable by T.I. SN7410N
U20, U25, U55, U60	156-0061-00	BCD to dec decoder. Replaceable by T.I. SN7442N
U3, U45, U50	156-0092-00	Hex. invert w/open coll. Replaceable by T.I. SN7405N
U65	156-0030-00	Quad 2-input gate. Replaceable by T.I. SN7400N
U80	156-0041-00	Dual D flip-flop. Replaceable by T.I. SN7474N
U95	156-0058-00	Hex. invert. Replaceable by T.I. SN7404N

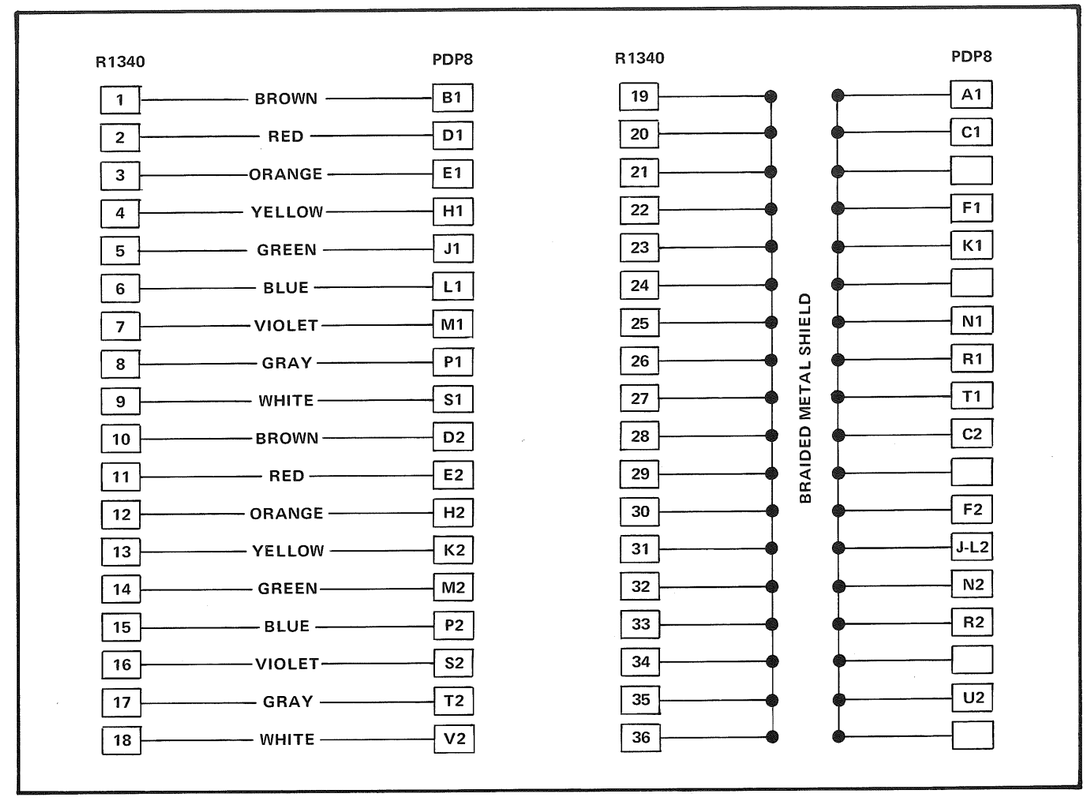

CABLE WIRING FOR PART NUMBERS – 012-0260-00, 012-0261-00, and 012-0262-00

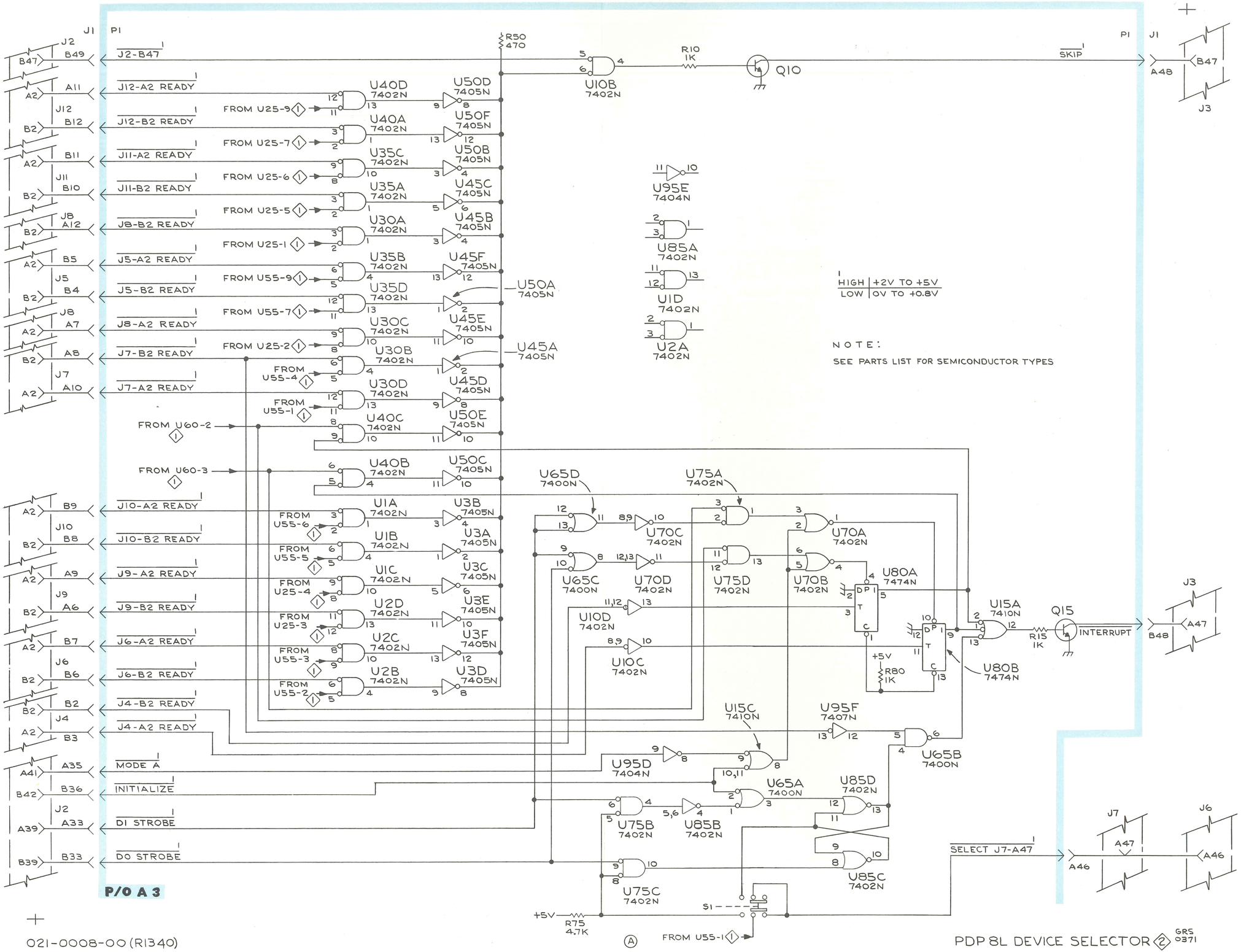

021-0008-00 (R1340)

PDP 8L DEVICE SELECTOR 2 GRS 0371

A4 DATA OUT Circuit Board Assembly

*670-1272-00	Complete Board	

Capacitors

Tolerance ±20% unless otherwise indicated.

C27, C29	283-0203-00	0.47 µF	Cer	50 V

Resistors

Resistors are fixed, composition, ±10% unless otherwise indicated.

R2, R4, R6, R8, R27, R29	315-0101-00	100 Ω	1/4 W	5%
R12, R14, R16, R18 R22, R24, R26, R28	315-0472-00	4.7 kΩ	1/4 W	5%

Integrated Circuits

U2	156-0058-00	Hex. invert. Replaceable by T.I. SN7404N
U12, U22	156-0030-00	Quad 2-input gate. Replaceable by T.I. SN7400N

A4 DATA FROM PDP-8/L

The PDP-8/L computer's eight bits of data is transferred from the PDP-8/L to the R1340 16-bit data bus continuously when $\overline{\text{MODE A}}$ is low. $\overline{\text{MODE A}}$ is low whenever the R1340 Mode switch is in the A position. Data Receiver cards are selected by the Device Selector, and will accept data from the data bus when strobed by DO STROBE or DI STROBE.

The INITIALIZE pulses, IO pulses (IOP), and BTS pulses are terminated in 100 Ω resistors on the A4 circuit card. If the R1340 is not the last instrument on the computer's I/O cable (i.e., if the R1340 is looped through) these 100 Ω resistors should be removed.

NOTE

BIOP stands for Buffered Input - Output Pulse.
BIOP 2 leaves A4 circuit card as $\overline{\text{DI STROBE}}$.
BIOP 4 leaves A5 circuit card as $\overline{\text{DO STROBE}}$.

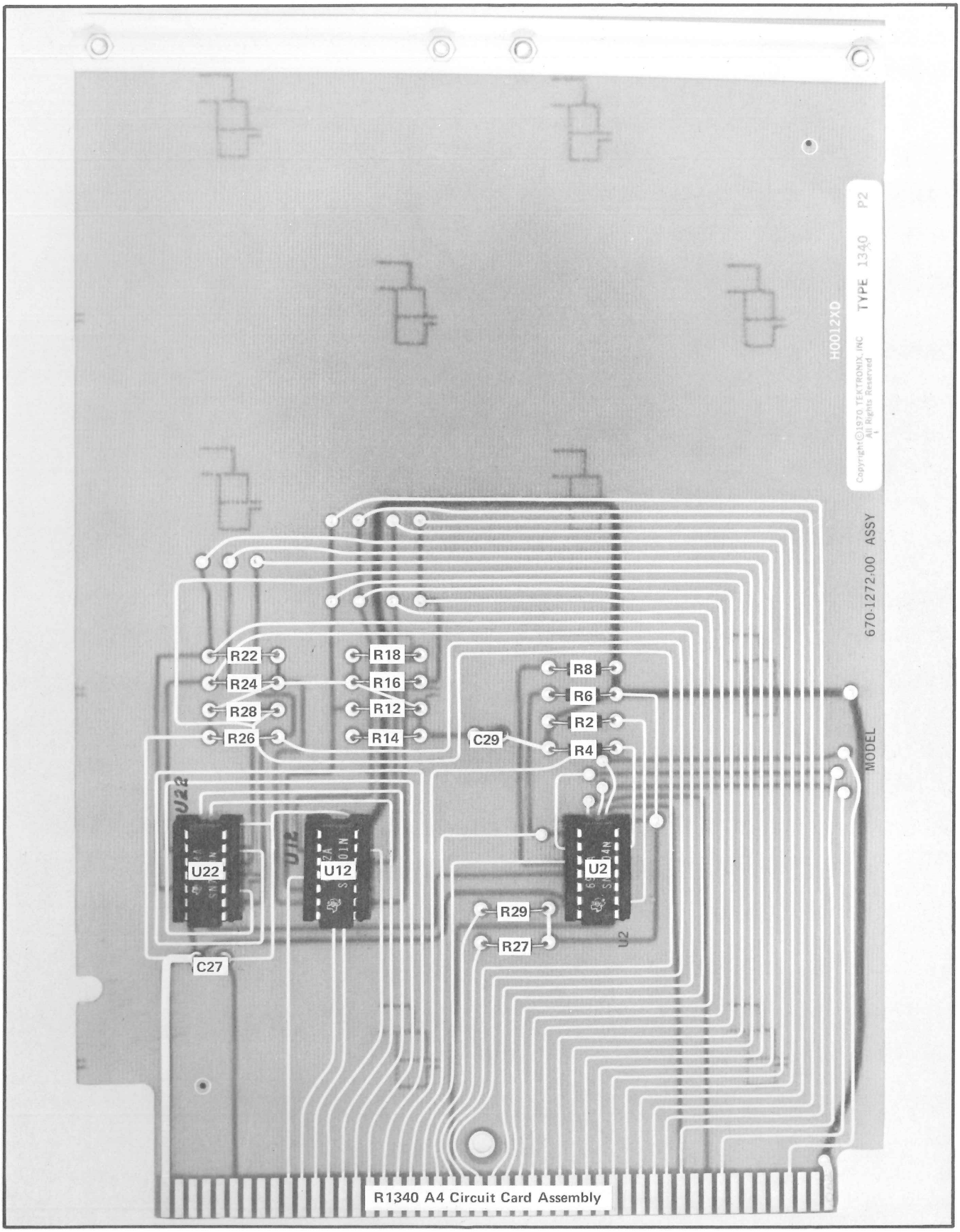

R1340 A4 Circuit Card Assembly

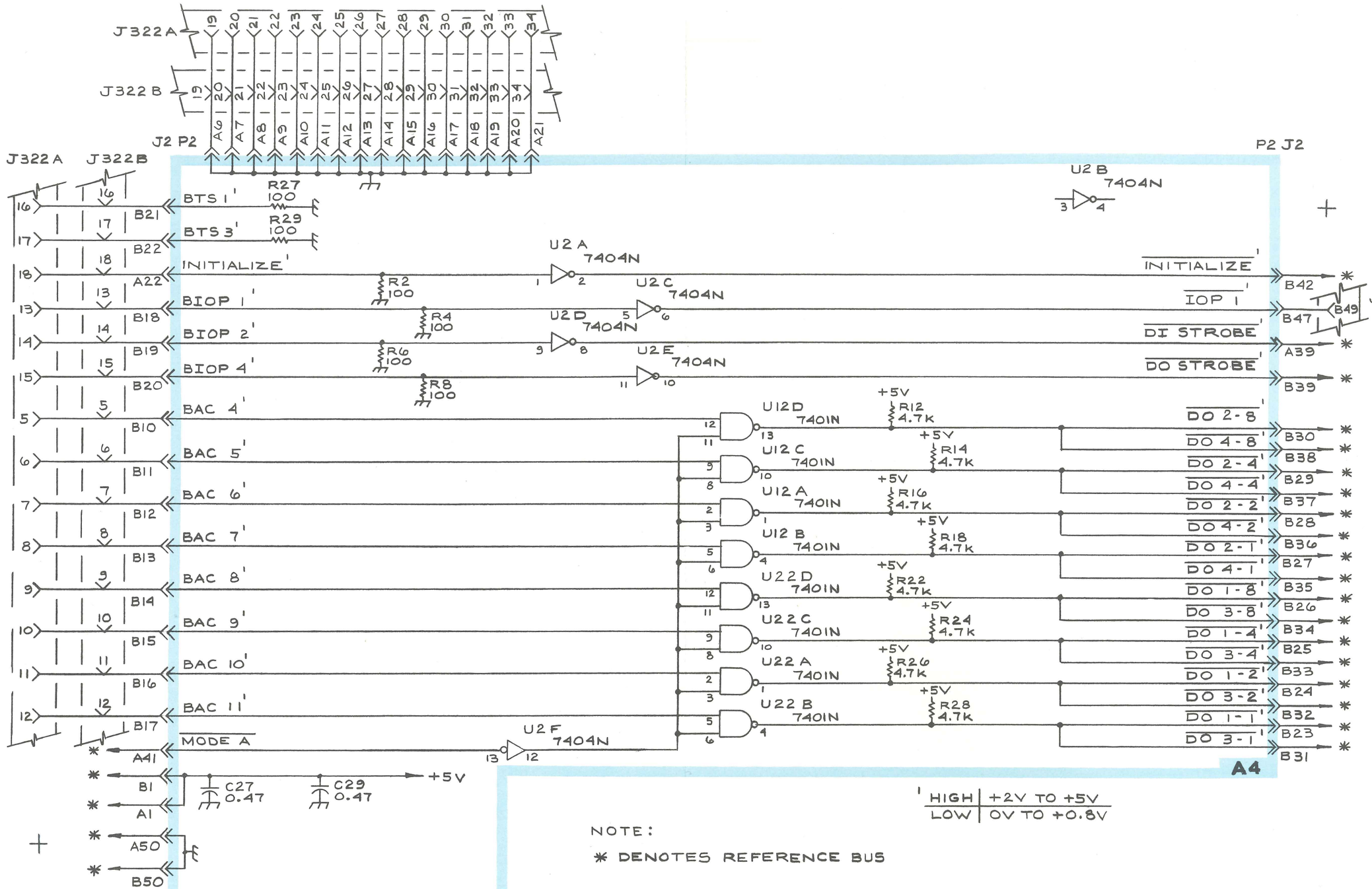

'	HIGH	+2V TO +5V
	LOW	0V TO +0.8V

NOTE:

* DENOTES REFERENCE BUS

A5 DATA IN Circuit Board Assembly

	*670-1271-00	Complete Board

Capacitors

Tolerance ±20% unless otherwise indicated.

C17, C19	283-0203-00	0.47 µF	Cer	50 V

Resistors

Resistors are fixed, composition, ±10% unless otherwise indicated.

R4, R6, R8, R10, R12, R14, R16, R18, R22, R24, R26, R28, R32, R34, R36, R38	315-0681-00	680 Ω	1/4 W	5%
R43	315-0102-00	1 kΩ	1/4 W	5%

Integrated Circuits

U2, U12, U22, U32	156-0043-00	Quad 2-input NOR gate. Replaceable by T.I. SN7402N
U10, U20, U30	156-0093-00	Hex. invert w/open coll. Replaceable by T.I. SN7416N
U42	156-0030-00	Quad 2-input gate. Replaceable by T.I. SN7400N

021-0008-00 (R1340)

A5 DATA TO PDP-8/L

When a Data Source card (i.e., Type 230 Data, Type 240 Test Number, etc.) is selected by the A3 Device Selector card, it places 16 bits of information on the R1340 Data Out Interface bus.

The eight less significant bits (DI 1-1 through DI 2-8) of this data are transferred from the R1340 16-bit data bus to the PDP-8/L when $\overline{\text{DI STROBE}}$ is low.

When $\overline{\text{DO STROBE}}$ is low, the eight more significant data bits (DI 3-1 through DI 4-8) are transferred from the R1340 16-bit data bus to the PDP-8/L.

This data transfer is allowed only when $\overline{\text{MODE A}}$ is low. $\overline{\text{MODE A}}$ is low whenever the R1340 MODE switch is in the A position.

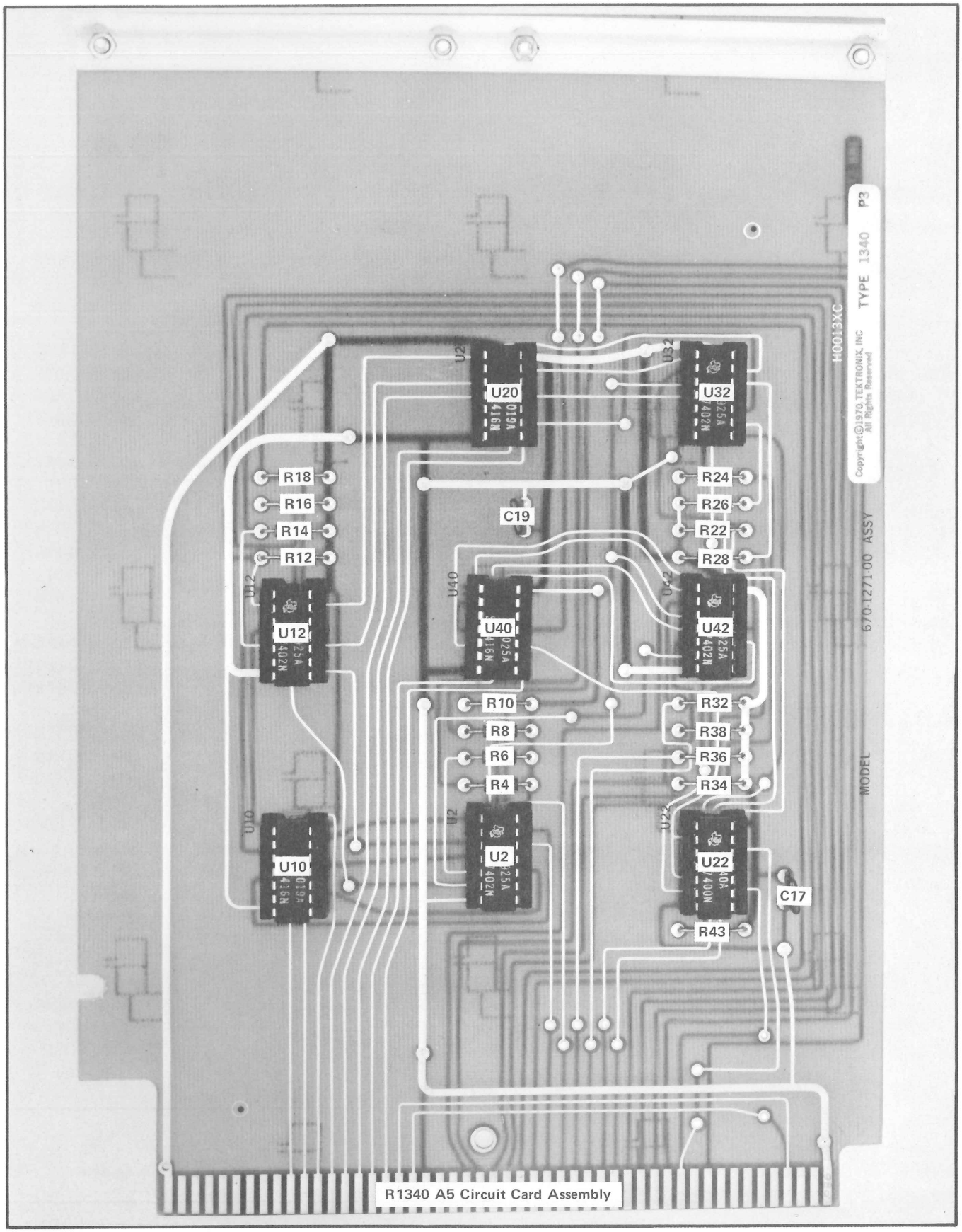

R1340 A5 Circuit Card Assembly

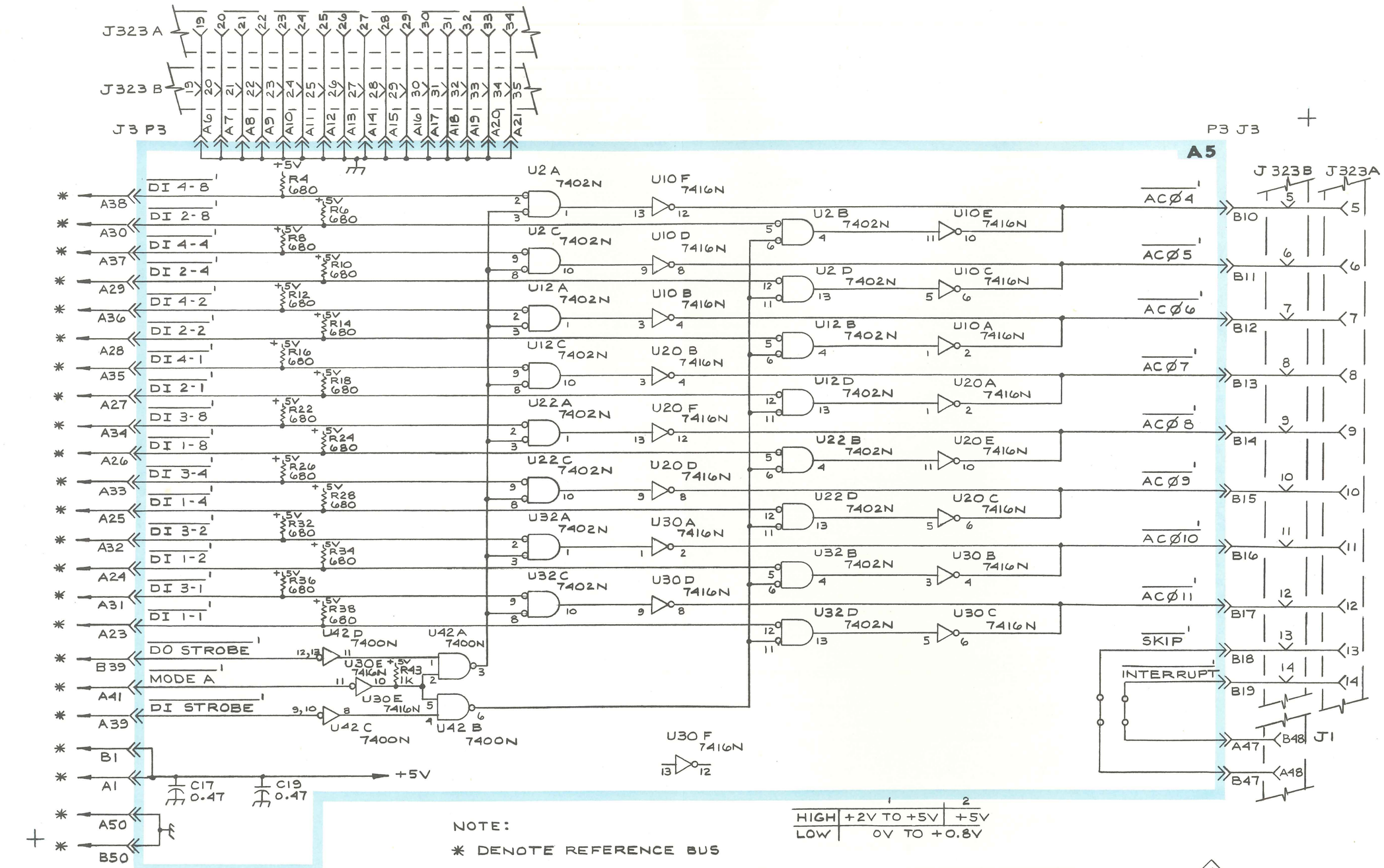

	1	2
HIGH	+2V TO +5V	+5V
LOW	0V TO +0.8V	

NOTE:

* DENOTE REFERENCE BUS

021-0008-00 (R1340)

(A)

DATA INTERFACE ASSEMBLY (4) EEB 02-71

DATA INTERFACE ASSEMBLY (4)

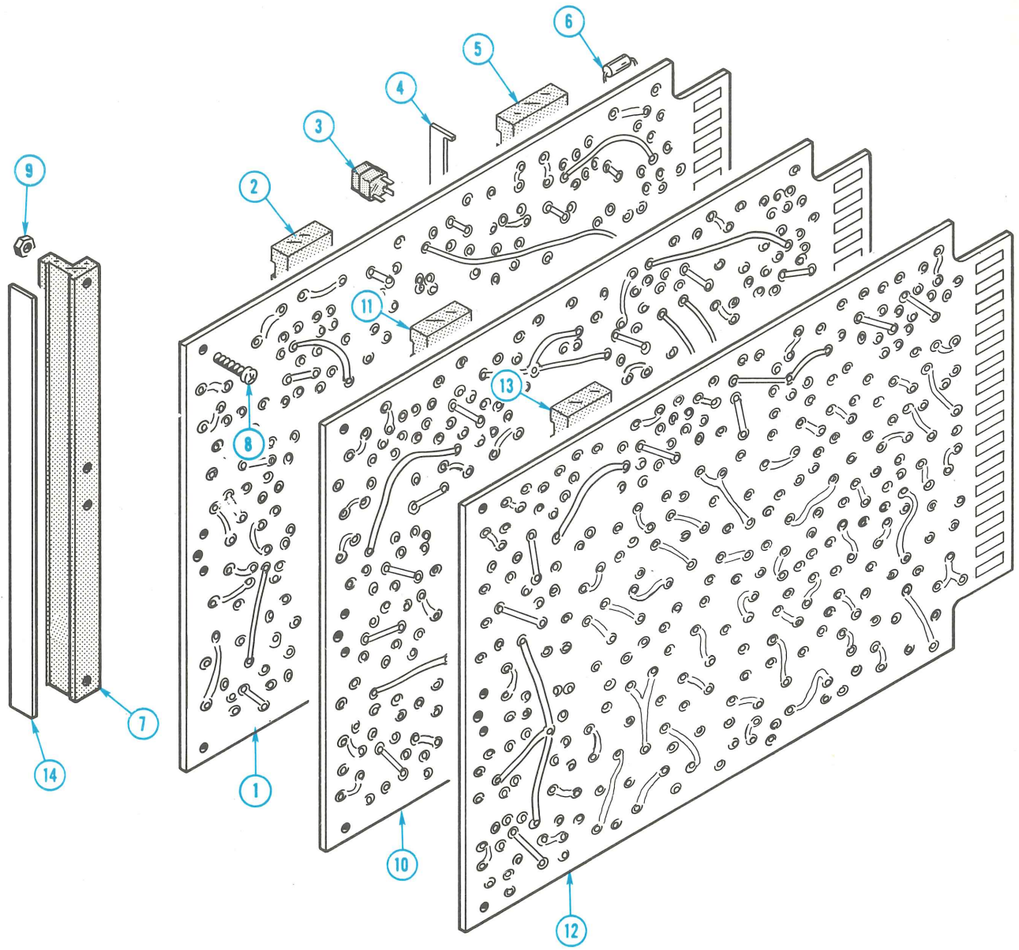

FIG. 1 EXPLODED

021-0008-00 INTERFACE, PDP-8/L COMPUTER

Fig. & Index No.	Tektronix Part No.	Serial/Model No. Eff	Disc	Qty	1 2 3 4 5 Description
	021-0008-00			1	INTERFACE, PDP-8L computer
	- - - - - - - - - -			-	interface includes:
-1	670-1261-01			1	CIRCUIT CARD ASSEMBLY—DEVICE SELECTOR
	- - - - - - - - - -			-	circuit card assembly includes:
	388-1762-01			1	CIRCUIT CARD
	260-0723-00			1	SWITCH, slide (not shown)
-2	136-0269-00			16	SOCKET, integrated circuit, 14 pin
-3	136-0220-00			2	SOCKET, transistor, 3 pin, square
-4	131-0998-00			4	BUS BAR, available in 8.132 inch lengths only
-5	136-0260-01			4	SOCKET, integrated circuit, 16 pin
-6	131-0566-00			3	LINK, terminal connecting
-7	344-0149-00			1	TIE STRIP, plastic, angle, 6 inches long
	- - - - - - - - - -			-	mounting hardware: (not included w/tie strip)
-8	211-0008-00			4	SCREW, 4-40 X 0.25 inch, PHS
-9	210-0406-00			4	NUT, hex., 4-40 X 0.188 inch
-10	670-1271-00			1	CIRCUIT CARD ASSEMBLY—DATA TO
	- - - - - - - - - -			-	circuit card assembly includes:
	388-1772-00			1	CIRCUIT CARD
-11	136-0269-00			8	SOCKET, integrated circuit, 14 pin
	344-0149-00			1	TIE STRIP, plastic, angle, 6 inches long
	- - - - - - - - - -			-	mounting hardware: (not included w/tie strip)
	211-0008-00			4	SCREW, 4-40 X 0.25 inch, PHS
	210-0406-00			4	NUT, hex., 4-40 X 0.188 inch
-12	670-1276-00			1	CIRCUIT CARD ASSEMBLY—DATA OUT
	- - - - - - - - - -			-	circuit board assembly includes:
	388-1773-00			1	CIRCUIT CARD
-13	136-0269-00			3	SOCKET, integrated circuit, 14 pin
	344-0149-00			1	TIE STRIP, plastic, angle, 6 inches long
	- - - - - - - - - -			-	mounting hardware: (not included w/tie strip)
	211-0008-00			4	SCREW, 4-40 X 0.25 inch, PHS
	210-0406-00			4	NUT, hex., 4-40 X 0.188 inch
	012-0260-00			1	CABLE, interconnecting, R1340 (J321) to PDP8-L (D-35)
	012-0261-00			1	CABLE, interconnecting, R1340 (J322) to PDP8-L (D-36)
	012-0262-00			1	CABLE, interconnecting, R1340 (J323) to PDP8-L (D-34)
	070-3049-00			1	MANUAL, instruction (not shown)
-14	334-1677-00			1	LABEL SET, 12 labels