Tektronix®

TM 503A
POWER MODULE

INSTRUCTION MANUAL

Tektronix®
COMMITTED TO EXCELLENCE

PLEASE CHECK FOR CHANGE INFORMATION AT THE REAR OF THIS MANUAL.

TM 503A
POWER MODULE

INSTRUCTION MANUAL

Tektronix, Inc.
P.O. Box 500
Beaverton, Oregon 97077

070-6568-00
Product Group 75

Serial Number _____

First Printing AUG 1987
Revised JUL 1988

INSTRUMENT SERIAL NUMBERS

Each instrument has a serial number on a panel insert, tag, or stamped on the chassis. The first number or letter designates the country of manufacture. The last five digits of the serial number are assigned sequentially and are unique to each instrument. Those manufactured in the United States have six unique digits. The country of manufacture is identified as follows:

B000000	Tektronix, Inc., Beaverton, Oregon, USA
100000	Tektronix Guernsey, Ltd., Channel Islands
200000	Tektronix United Kingdom, Ltd., London
300000	Sony/Tektronix, Japan
700000	Tektronix Holland, NV, Heerenveen, The Netherlands

TABLE OF CONTENTS

OPERATORS PART

WARNING

THE FOLLOWING SERVICING INSTRUCTIONS ARE FOR USE BY QUALIFIED PERSONNEL ONLY. TO AVOID PERSONAL INJURY, DO NOT PERFORM ANY SERVICING OTHER THAN THAT CONTAINED IN OPERATING INSTRUCTIONS UNLESS YOU ARE QUALIFIED TO DO SO.

SERVICE PART

OPERATORS SAFETY SUMMARY

The general safety information in this part of the summary is for both operating and servicing personnel. Specific warnings and cautions will be found throughout the manual where they apply, but may not appear in this summary.

TERMS

In This Manual

CAUTION statements identify conditions or practices that could result in damage to the equipment or other property.

WARNING statements identify conditions or practices that could result in personal injury or loss of life.

As Marked on Equipment

CAUTION indicates a personal injury hazard not immediately accessible as one reads the marking, or a hazard to property including the equipment itself.

DANGER indicates a personal injury hazard immediately accessible as one reads the marking.

SYMBOLS

In This Manual

⚠ This symbol indicates where applicable cautionary or other information is to be found.

As Marked on Equipment

DANGER—High voltage.

Protective ground (earth) terminal.

ATTENTION—refer to manual.

Power Source

This product is intended to operate from a power source that will not apply more than 250 volts rms between the supply conductors or between either supply conductor and ground. A protective ground connection by way of the grounding conductor in the power cord is essential for safe operation.

Grounding the Product

This product is grounded through the grounding conductor of the power cord. To avoid electrical shock, plug the power cord into a properly wired receptacle before connecting to the product input or output terminals. A protective ground connection by way of the grounding conductor in the power cord is essential for safe operation.

Danger Arising From Loss of Ground

Upon loss of the protective-ground connection, all accessible conductive parts (including knobs and controls that may appear to be insulating) can render an electric shock.

Use the Proper Power Cord

Use only the power cord and connector specified for your product.

Use only a power cord that is in good condition.

For detailed information on power cords and connectors, see maintenance section.

Refer cord and connector changes to qualified service personnel.

Use the Proper Fuse

To avoid fire hazard, use only the fuse of correct type, voltage rating and current rating as specified in the parts list for your product.

Refer fuse replacement to qualified service personnel.

Do Not Operate in Explosive Atmospheres

To avoid explosion, do not operate this product in an explosive atmosphere unless it has been specifically certified for such operation.

Do Not Remove Covers or Panels

To avoid personal injury, do not remove the product covers or panels. Do not operate the product without the covers and panels properly installed.

SERVICE SAFETY SUMMARY

FOR QUALIFIED SERVICE PERSONNEL ONLY

Refer also to the preceding Operators Safety Summary.

Do Not Service Alone

Do not perform internal service or adjustment of this product unless another person capable of rendering first aid and resuscitation is present.

Use Care When Servicing With Power On

Dangerous voltages exist at several points in this product. To avoid personal injury, do not touch exposed connections and components while power is on.

Disconnect power before removing protective panels, soldering, or replacing components.

Power Source

This product is intended to operate from a power source that will not apply more than 250 volts rms between the supply conductors or between either supply conductor and ground. A protective ground connection by way of the grounding conductor in the power cord is essential for safe operation.

SPECIFICATION

INTRODUCTION

Description

The TEKTRONIX TM 503A Power Module is a three-compartment-wide mainframe for the TM 500—Series of modular instrumentation. It accepts up to three independently functional plug-in modules to form a compact, versatile and low cost instrumentation system. The TM 503A is a basic power source for plug-in modules of the TM 500 Series family. It provides unregulated dc and ac supplies and non-dedicated power transistors for plug-in usage.

Accessories

Refer to the accessories list in the Replaceable Mechanical Parts list at the rear of this manual for part numbers.

Standard Accessories

1 Instruction Manual
2 Plug-in Retainer Clips
1 Handle/Tilt Stand
1 Power Cord (U.S.)

Options

Refer to the Options section of this manual for information on instrument options.

Performance Conditions

The values listed below are valid only when the instrument is operated at an ambient temperature between 0°C and 50°C.

ELECTRICAL CHARACTERISTICS

Table 1-1
SUPPLIES PER COMPARTMENT

Characteristics	Performance Requirements	Supplemental Information
+33.5 Vdc		
Tolerance[a]		+23.7 V to +40.0 V
PARD[b]		<2.5 V p to p.
Maximum Load		350 mA.
Maximum Load di/dt		10 mA/μs
−33.5 Vdc		
Tolerance[a]		−23.7 V to −40.0 V
PARD[b]		<2.5 V p to p.
Maximum Load		350 mA.
Maximum Load di/dt		10 mA/μs
+11.5 Vdc		
Tolerance[a]		+7.6 V to +16.0 V
PARD[b]		<2.5 V p to p.
Maximum Load		1.3 A, shared with 17.5 Vac winding.
Maximum Load di/dt		20 mA/μs
25 Vac (3 each)		
Range		25.0 V rms +10%, −15% floating
Maximum Load		25 VA
Maximum Floating V		350 V peak
17.5 Vac		
Range		20.5 V +10%, −20% grounded center tap
Maximum Load		30 VA, shared with 11.5 Vdc supply.
MAXIMUM PLUG-IN POWER[c] DRAW FROM MAINFRAME		35 W dc or 75 VA ac
COMBINED POWER DRAW[c] SHARING LIMITATION		VA ac + 2.1 (Watts dc) < 75.

[a]Worst case low line full load and high line - no load values including PARD.
[b]Periodic and Random Deviation. See: Nema Standards Publication PY1-1972.
[c]At nominal line voltage.

Table 1-2
TOTAL POWER DRAW FROM MAINFRAME

Characteristics	Performance Requirements	Supplemental Information
TOTAL POWER DRAW[a] (all compartments combined)		VA ac + (watts dc) <112.5.

[a]At nominal line voltage.

Table 1-3
SERIES PASS TRANSISTORS

Characteristics	Performance Requirements	Supplemental Information
TYPE		One each NPN and PNP per compartment.
MAXIMUM DISSIPATION		7.5 W each, 15 W total

Table 1-4
SOURCE POWER REQUIREMENTS

Characteristics	Performance Requirements	Supplemental Information
VOLTAGE RANGES		Selectable 100 V, 120 V, 220 V, and 240 V nominal line ±10%.
LINE FREQUENCY		48 Hz to 400 Hz.
MAXIMUM POWER CONSUMPTION		Approximately 120 W.
FUSE DATA		
100 V, 120 V Ranges		1.5 A, 3 AG, fast blow, 250 V.
220 V, 240 V Ranges		0.8 A, 3 AG, slow blow, 250 V.

Table 1-5
MISCELLANEOUS

Characteristics	Performance Requirements	Supplemental Information
MAXIMUM RECOMMENDED PLUG-IN POWER DISSIPATION		
One-Wide		10 to 15 W.
Two-Wide		25 to 35 W.

PHYSICAL CHARACTERISTICS

Table 1-6
ENVIRONMENTAL[a]

Characteristics	Description	
TEMPERATURE		Meets MIL-T-28800D, class 5.
Operating[b]:	0°C to +50°C	
Non-Operating:	−55°C to +75°C	
HUMIDITY[b]:	95% RH, 0°C to 50°C, non-condensing.	Exceeds MIL-T-28800D, class 5.
ALTITUDE		
Operating[b]:	4.6 km (15,000 ft.)	Exceeds MIL-T-28800D, class 5.
Non-operating:	15 km (50,000 ft)	
VIBRATION:	0.25 mm (0.010″) peak to peak, 5 Hz to 55 Hz, 75 minutes.	See footnote b.
SHOCK:	20 g's (1/2 sine) 11 ms duration, 3 shocks in each direction along 3 major axes, 18 total shocks.	See footnote b.
BENCH HANDLING:	12 drops from 45 degrees, 4″ or equilibrium, whichever occurs first.	Meets MIL-T-28800D, class 5.
TRANSPORTATION:	Qualified under National Safe Transit Association Preshipment Test Procedures 1A-B-1 and 1A-B-2.	
EMC:	Electro-mechanical compatability within limits of F.C.C. Regulations, Part 15, Subpart J, Class A.	
ELECTRICAL DISCHARGE:	20 kV maximum discharge applied to instrument case.	

[a]With plug-ins.
[b]Meets MIL-T-28800D, class 5 with plug-ins (0.015″ displacement, 30 g's shock).

Table 1-7
MECHANICAL

Characteristics	Description
NOMINAL WEIGHT (Without Plug-ins)	4.7 kg (10.3 lbs)
OVERALL DIMENSIONS	
Length:	45.2 cm (17.8 in.)
Width:	21.4 cm (8.4 in.)
Height:	14.0 cm (5.5 in.)

OPERATING INSTRUCTIONS

PREPARATION

This section of the manual contains instructions on preparing the power module for use, and installing plug-in modules.

Power Source

The TM 503A is designed to operate from a power source with its neutral at or near earth (ground) potential with a separate safety-earth conductor. It is not intended for operation from two phases of a multi-phase system.

Power Usage/Loading Considerations

With three plug-in modules installed, the TM 503A can require up to 112.5 W of power at the upper limits of the high line voltage ranges. Actual power consumption depends on the particular module combination and operating mode selected at any one time.

The power capability of the TM 503A can best be used by carefully planning the plug-in configuration, the external loads, and the resulting power distributions. Optimum conditions may be obtained by:

1. Having equal loads in both compartments.

2. Dissipating as much power as possible in the external loads.

3. Operating the system in an ambient temperature near 25°C.

Each plug-in is provided access to a pair of heat-sinked, series-pass transistors—one NPN and the other PNP. These transistors enable the plug-in to operate in power ranges not possible if the power were to be dissipated within the plug-ins.

Line Voltage Selection/Fuse Replacement

The line voltage selector is part of the line cord plug assembly, located on the rear of the power module. Verify that the voltage shown in the selector window is correct for the line voltage available.

If the displayed voltage selection is incorrect or the fuse needs replacement, perform the following procedure. Refer to Fig. 2-1.

1. Make certain that the power module power switch (on rear of power module) is turned off and the line cord is not plugged into the line voltage connector.

2. Remove the voltage selector/fuse holder by pushing the latch/release bar toward the selection window. The selector/fuse holder should release and move slightly out of the socket. Remove the voltage selector/fuse holder from the assembly.

3. Pull the fuse block and fuse from the voltage selector/fuse holder. Remove the fuse from the fuse block. Make certain a replacement fuse has the proper ratings for the selected line voltage (refer to Specifications for fuse rating). Insert fuse into fuse block.

4. The line voltage selections are printed on the end of the fuse box. Rotate the fuse box and reinstall it so that the proper line voltage selection is visible through the selection window.

5. Reinstall the voltage selector/fuse holder.

6. Verify that the correct line voltage value is visible through the line voltage selector window.

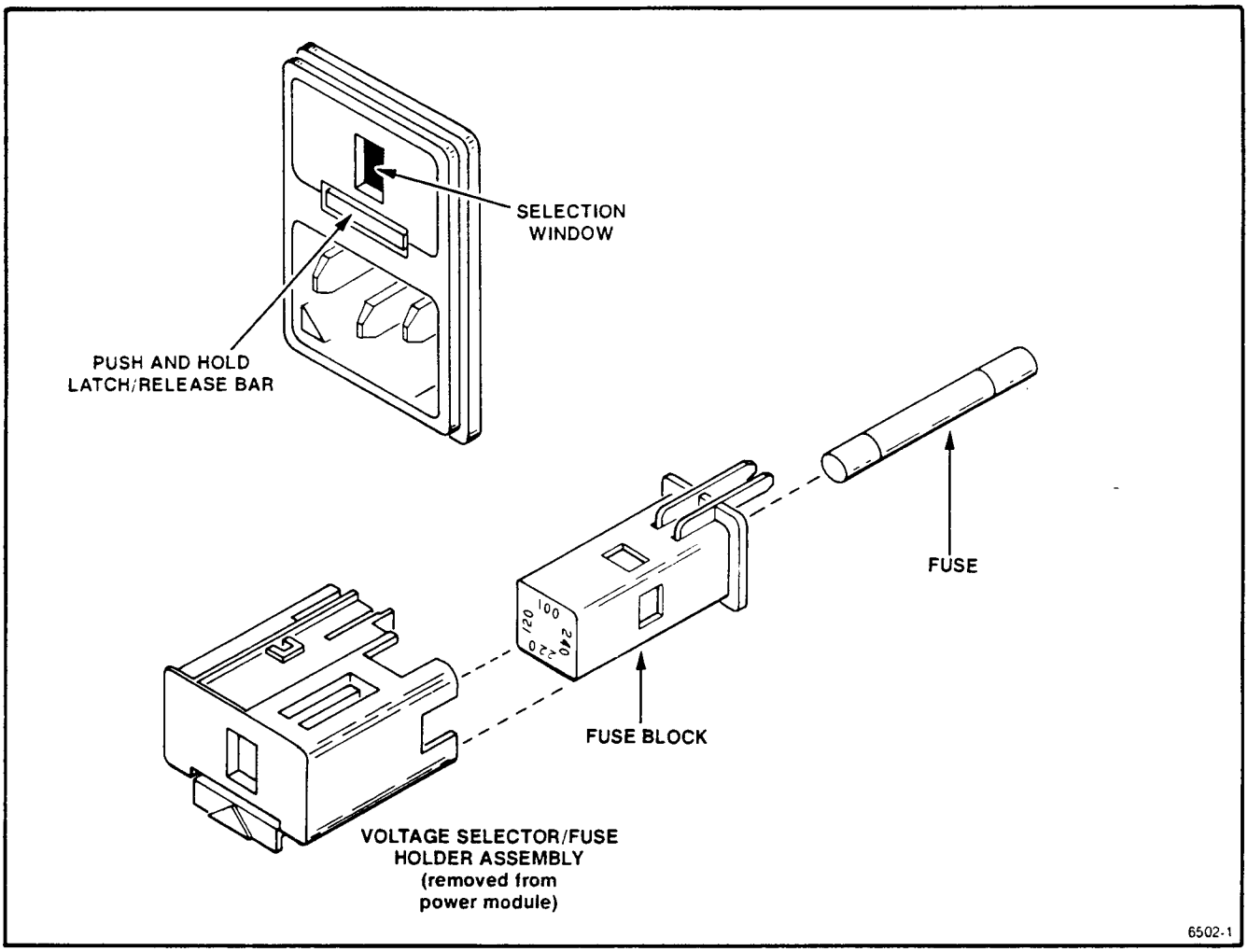

Fig. 2-1. Line voltage selection/fuse replacement.

Handle/Tilt Stand Installation

Before starting handle installation, check the handle kit contents against the list below:

2 Phillips screws
2 metal washers
2 plastic locking buttons
1 metal handle

A Phillips screwdriver is the only tool required. The following steps outline handle installation:

a. Turn off the power module power switch and disconnect the line cord.

b. Remove any plug-in modules.

c. On each side of the power module (about 2 inches from the front edge) is a black plug. Remove each plug by pushing it out from inside of the power module.

d. From outside the power module, place the plastic locking button in the handle slot and into the square hole in the side panel, as shown in Fig. 2-2. Note that the rounded edges of the button must be facing the top and bottom panels of the power module, as shown in the illustration.

e. Place the metal washer inside the side panel, over the hole in the button.

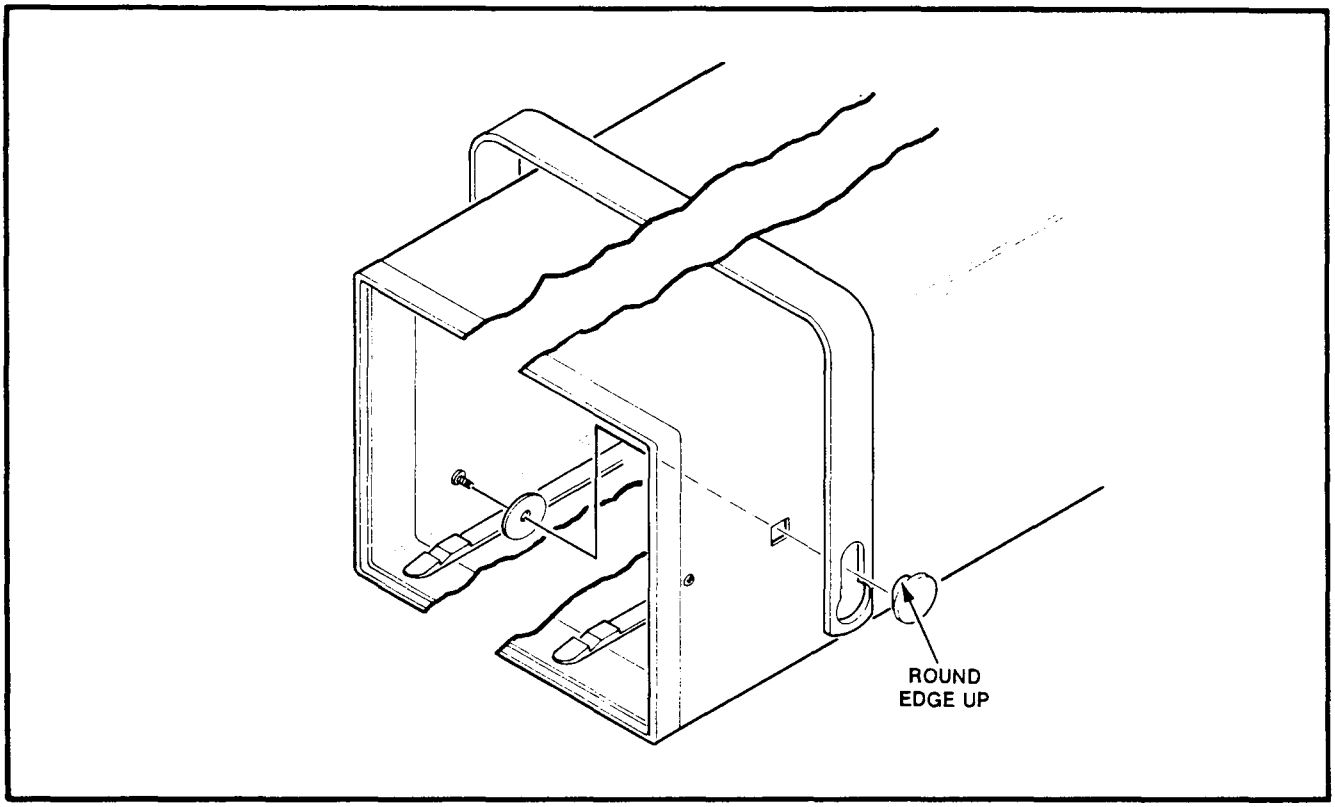

Fig. 2-2. Handle installation.

f. Install the Phillips screw.

Repeat this procedure for the other end of the handle.

Operating Temperatures

The TM 503A can be operated in an ambient air temperature range of 0°C to +50°C. Since the TM 503A can be stored in temperatures between −55°C and +75°C, allow the instrument's chassis to return to within the temperature operating limits before applying power.

Family Compatibility

Mechanically, the TM 500 Series plug-in modules are very similar to other TEKTRONIX product families. However, they are not **electrically** compatible. Therefore, the TM 503A interface has barriers on the mating connectors between pins 6 and 7 to ensure that incompatible plug-ins cannot be inserted. (Pin 1 is on the connector end near the bottom side of the power module.) A compatible module will have a matching slot between pins 6 and 7 of its main circuit board edge connector. This slot and barrier combination is the primary keying assignment.

Customizing the Interface

The modularity of this instrumentation system provides for may different functions to be performed by the plug-in modules. Specific functions are grouped into families or classes, of which there may be several plug-in modules. For instance, some classes are Power Supplies, Signal Sources, Measurement, and so forth. Each modular member of a functional family will have a second slot peculiar to its family assignment located in its edge connector. The TM 503A user can 'program" one or more compartments to accept only members of that family by installing a second barrier in the interface connector to match the module's slot location. The TM 503A can be 'programmed" in this manner to set up systems for specific work functions. For extra barriers, contact the nearest Tektronix Field Office.

Jumper wires can be used to further specialize the interface. Compartments can be made to 'talk" to each other by connecting jumpers on the back side of the interface board, using pins 14 through 28 (both A-side and B-side) of the interconnecting jacks. See the following description of Option 02. Refer to each plug-in module's Manual for the I/O assignments of each pin at the rear interface. Once interconnections of a specialized nature are made, it is recommended that barriers be installed on the interconnecting jacks to ensure module compatibility with the customized wiring.

Option 02

This option adds three BNC connectors and a 50-pin connector to the rear panel to allow external access to the interface for external I/O control. These connectors are not prewired. Instead, prepared jumpers, strip pins, coaxial cables, and interconnection jack barriers are included in a kit. This gives the system designer as much flexibility as possible. Refer qualified service personnel to the Maintenance section of this manual for Option 02 installation information.

MODULE INSTALLATION

It is not necessary that all plug-in compartments be utilized in order to operate the power module.

1. Check the location of the plastic barriers on the TM 503A interconnecting jacks to ensure that their locations match the slots in the edge of the plug-in module's main circuit board. If they do not match, refer the qualified service personnel to the Maintenance section of this manual for information.

2. Align the plug-in module chassis with the upper and lower guides of the selected compartment. Push the module in and press firmly to seat the circuit board in the interconnecting jack. (Remove the plug-in module by pulling on the release latch in the lower left corner of the plug-in module.)

CAUTION

Turn the power module off before inserting or removing a plug-in; otherwise, damage may occur to the plug-in circuitry.

Plug-in Retainer Clip Installation

The retainer clip is used to ensure that an installed plug-in module cannot come out of the power module while it is being moved or transported. Note that plug-in modules cannot be removed or inserted with the retainer clip installed.

To install the retainer clip, stand the power module on end. Remove the round-head Phillips screw located on the bottom side of the TM 503A just behind the front casting. Align the hole in the retainer clip with the chassis hole, with the clip extending forward and into the module opening, over the bottom edge of the plug-in module(s). Re-install the screw.

Turn-On Procedure

After completing the power module preparation and plug-in module installation instructions, install the power cord and connect to the proper power outlet. Turn on the power switch on the rear of the power module (located on the rear of the power module). Some plug-ins have independent power switches, usually labeled OUTPUT, that control application of mainframe power to the plug-in.

WARNING

THE FOLLOWING SERVICING INSTRUCTIONS ARE FOR USE BY QUALIFIED PERSONNEL ONLY. TO AVOID PERSONAL INJURY, DO NOT PERFORM ANY SERVICING OTHER THAN THAT CONTAINED IN OPERATING INSTRUCTIONS UNLESS YOU ARE QUALIFIED TO DO SO. REFER TO OPERATORS SAFETY SUMMARY AND SERVICE SAFETY SUMMARY PRIOR TO PERFORMING ANY SERVICE.

MAINTENANCE

Introduction

This section of the manual provides maintenance and service information for the TM 503A power module.

WARNING

Dangerous potentials exist at several points throughout the power module. When the power module must be operated with the cabinet removed, do not touch exposed connections or components. Some transistors have voltages present on their cases. Disconnect power before cabinet removal, cleaning, or replacing parts.

Cabinet Removal

Before removing the cabinet, turn the power switch off and disconnect the line voltage cord. Remove any plug-in modules and the handle assembly.

Two screws on each side and two screws on the bottom secure the cabinet to the TM 503A front casting. Each guide rail is attached to the front casting via a screw. Additionally, four screws located on the bottom and two screws on the back hold the power supply to the cabinet. Remove the screws and slide the power supply assembly out through the front of the cabinet. Re-install the cabinet to protect the interior from dust and to remove personnel shock hazards.

Cleaning

CAUTION

Avoid using chemical cleaning agents which might damage plastic parts. Avoid chemicals containing benzene, toluene, zylene, acetone, or similar solvents.

Exterior. Loose dust may be removed with a soft cloth or a dry brush. Water and a mild detergent may be used; however, abrasive cleaners should not be used.

Interior. Use low-velocity compressed air to blow off accumulated dust. Hardened dirt can be removed with a soft, dry brush, cotton-tipped swab, or a cloth dampened in a solution of water and mild detergent.

Preventive Maintenance/Calibration

The TM 503A power module does not require preventive maintenance or calibration.

Circuit Board Removal

a. Remove the power supply assembly from the power module. Refer to Cabinet Removal in this section of the manual for instructions.

b. On the power supply assembly, remove the screws on each side and on the bottom that secure the series-pass transistor clamp. Remove the clamps.

c. Remove the six screws on the interface connector side of the power supply assembly that secure the circuit board to the chassis.

d. Disconnect from the circuit board the three connectors going to the transformer.

e. Slide the circuit board out of the power supply assembly.

Voltage Selector/Fuse Holder Assembly Removal

To remove the voltage selector/fuse holder assembly, remove the cabinet. Refer to Cabinet Removal in this section of the manual.

Disconnect the connectors from the terminals on the back of the voltage selector/fuse holder assembly, labeling each wire.

The assembly has a locking tab on the top and bottom sides that secure it in the chassis hole.

CAUTION

Do not apply excessive force to the locking tabs. Excessive pressure will reduce the strength of the plastic material.

Push the top tab in carefully, pulling gently on the assembly from the outside. That side of the assembly will be released. Repeat to release the bottom side. Pull the assembly through the chassis hole to the outside, taking care not to damage the capacitors.

Option 02

This option adds three BNC connectors and one 50-pin connector to the rear panel to allow external access to the interface for external I/O control. These connectors are not pre-wired in order to give a system designer as much flexibility as possible. Instead, prepared jumpers, coax cables, and interconnection jack barriers are included.

Option 02 Connector Installation

To install the Option 02 kit, remove the power supply from the cabinet. Refer to Cabinet Removal in this section of the manual.

Three plugs and a plate cover the connector cutouts in the back of the power supply. Remove the plugs and plate as necessary for your wiring configuration. Install the required connectors from the kit.

System Design Directions

a. Plan the plug-in location based on the front panel controls and operator convenience as well as interface connections.

b. Plan the wiring between interface jacks and to the rear panel connectors carefully before starting assembly. A mating rear panel 50-pin connector and cover are provided for external cabling.

NOTE

There are no pin assignments for the rear panel connectors because these assigments are user-selected.

When high frequency or fast digital signals are involved, plan the wires so as to minimize crosstalk. Make allowance for the possible need to make auxiliary ground connections.

The 50-pin rear panel connector may be easier to connect if it is removed from the rear panel and remounted after connections are made.

If more than 50 pins are needed, a connector with additional pins (and the same physical size) may be mounted in the same cutout.

c. Pin assignments for individual plug-ins are provided in the plug-in instruction manual.

d. Remove the circuit board from the power supply. Refer to Circuit Board Removal in this section of the manual for instructions.

e. Install a plastic barrier on the interface jack to lock out other types of TM 500 plug-in modules that would not be compatible with the user-installed interface wiring. Refer to the plug-in module instruction manual for the appropriate slot for barrier installation.

f. Break off individual pins from the pin strips provided in the Option 02 kit. Pins are inserted in the circuit board side that faces the back of the power supply. Insert pins in the circuit board holes that connect through the board traces to the connector pins, as required for your wiring configuration. Solder pins from the front side of the circuit board. Refer to the board illustration in the Diagrams and Circuit Board Illustration section of this manual.

g. Select and install the wires (standard or coax) on the strip pins. Use the 1-connector shields on wires on adjacent pins to prevent accidental shorting. Follow the guidelines in the Wire Use part of these instructions.

h. Reinstall the circuit board in the power supply.

i. Connect the wires to the bnc and/or 50-pin connectors, as required. Wires or cables that may be at large potential differences should be dressed or bundled so as to avoid contact. Keep all interface wiring away from the power module primary line wiring.

j. Reinstall the power supply in the cabinet.

Wire Use

Standard Wire. These wires may be used for low-frequency or dc circuits where impedance levels and crosstalk are not a problem. The wire is supplied in various lengths for connection between compartments (adjacent or non-adjacent) or between a compartment and the rear panel.

Coaxial Wire. These wires are used for connections that require shielding or that must maintain a 50-ohm characteristic impedance. The outer conductor should be connected to either chassis ground or circuit ground. Plug-in lines that require coax leads usually have a specified ground pin assignment. If necessary, establish auxiliary ground connections at the appropriate wire ends. The coaxial wire is also supplied in various lengths for wiring between the different interface connectors and/or rear panel connectors.

Series Pass Transistor Replacement

NOTE

A new adhesive insulator plate must be applied to the transistor before installation. To maintain proper insulating characteristics, do not re-use the insulating plate from the transistor being replaced.

To replace a series pass transistor, remove the cabinet; then remove the circuit board. Refer to Cabinet Removal and Circuit Board Removal in this section of the manual.

a. Unsolder and remove the transistor being replaced, from the circuit board.

b. Carefully bend the new transistor leads according to the dimensions in Fig. 3-1. The illustration is drawn actual size so that you can physically compare the lead angles with the drawing.

c. Apply a new adhesive insulator plate to the transistor side having exposed metal.

d. Re-install the circuit board into the power supply assembly.

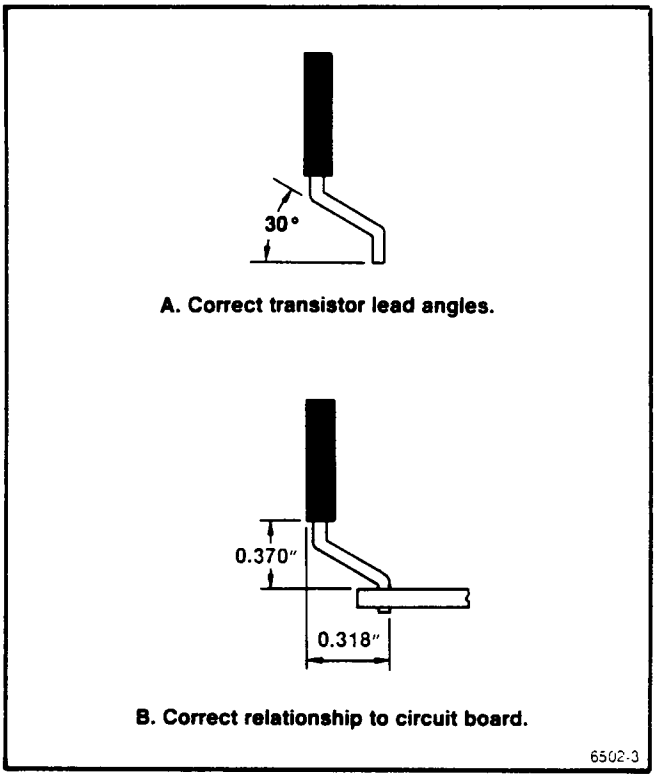

Fig. 3-1. Series pass transistor replacement. (Shown actual size.)

e. Insert the leads of the replacement transistor into the circuit board holes, with the insulating plate facing the metal chassis.

f. Re-install the transistor clamp.

g. Solder the transistor onto the board, applying minimum heat.

h. Re-install the assembly into the power module cabinet. Re-install the handle assembly.

Obtaining Replacement Parts

Electrical and mechanical parts can be obtained through your local Tektronix Field Office or representative. However, it may be possible to obtain many of the standard electronic components from a local commercial source. Before purchasing or ordering a part from a source other than Tektronix, Inc., check the Replaceable Electrical Parts list for the proper value, rating, tolerance, and description.

NOTE

When selecting replacement parts, remember that the physical size and shape of a component may affect its performance in the instrument.

Some parts are manufactured or selected by Tektronix, Inc., to satisfy particular requirements or are manufactured for Tektronix, Inc., to our specifications. Most of the mechanical parts used in this instrument have been manufactured by Tektronix, Inc.. To determine the manufacturer, refer to the Replaceable Parts list and the Cross Reference index, Mfr. Code Number to Manufacturer.

When ordering replacement parts from Tektronix, Inc., include the following information:

1. Instrument type and option number.
2. Instrument serial number.
3. A description of the part (if electrical, include complete circuit number).
4. Tektronix part number.

Packaging Information

A list of standard accessories (and part numbers) is located at the end of the Replaceable Mechanical Parts list.

If the Tektronix instrument is to be shipped to a Tektronix Service Center for service or repair, attach a tag showing owner (with address) and the name of an individual at your firm that can be contacted. Include the complete instrument serial number and a description of the service required.

Save and re-use the package in which your instrument was shipped. If the original packaging is unfit for use or not available, repackage the instrument as follows:

Surround the instrument with polyethylene sheeting to protect the finish of the instrument. Obtain a carton of corrugated cardboard of the correct carton strength and having inside dimensions of no less than 6 inches more than the instrument dimensions. Cushion the instrument by tightly packing 3 inches of dunnage or urethane foam between carton and instrument on all sides. Seal the carton with shipping tape or an industrial stapler.

The carton test strength for this instrument is 275 pounds per square inch.

OPTIONS

The following options are available for the TM 503A power module.

Option 02—allows customizing the interface.

Option 11—deletes handle/tilt stand.

Option 13—adds storage plug-in.

Option A1—changes the power to Universal European (220 Volt, 16 Amp, 50 Hz).

Option A2—changes the power to United Kingdom (240 Volt, 13 Amp, 50 Hz).

Option A3—changes the power to Australian (240 Volt, 10 Amp, 50 Hz).

Option A4—changes the power to North American (240 Volt, 15 Amp, 60 Hz).

Option A5—changes the power to Switzerland (220 Volt, 10 Amp, 50 Hz).

REPLACEABLE ELECTRICAL PARTS

PARTS ORDERING INFORMATION

Replacement parts are available from or through your local Tektronix, Inc. Field Office or representative.

Changes to Tektronix instruments are sometimes made to accommodate improved components as they become available, and to give you the benefit of the latest circuit improvements developed in our engineering department. It is therefore important, when ordering parts, to include the following information in your order: Part number, instrument type or number, serial number, and modification number if applicable.

If a part you have ordered has been replaced with a new or improved part, your local Tektronix, Inc. Field Office or representative will contact you concerning any change in part number.

Change information, if any, is located at the rear of this manual.

LIST OF ASSEMBLIES

A list of assemblies can be found at the beginning of the Electrical Parts List. The assemblies are listed in numerical order. When the complete component number of a part is known, this list will identify the assembly in which the part is located.

CROSS INDEX-MFR. CODE NUMBER TO MANUFACTURER

The Mfr. Code Number to Manufacturer index for the Electrical Parts List is located immediately after this page. The Cross Index provides codes, names and addresses of manufacturers of components listed in the Electrical Parts List.

ABBREVIATIONS

Abbreviations conform to American National Standard Y1.1.

COMPONENT NUMBER (column one of the Electrical Parts List)

A numbering method has been used to identify assemblies, subassemblies and parts. Examples of this numbering method and typical expansions are illustrated by the following:

Example a.

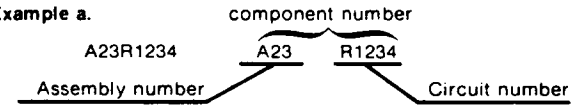

Read: Resistor 1234 of Assembly 23

Example b.

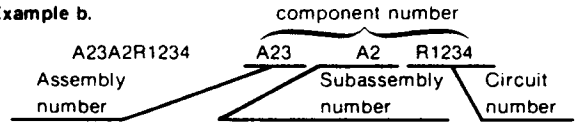

Read: Resistor 1234 of Subassembly 2 of Assembly 23

Only the circuit number will appear on the diagrams and circuit board illustrations. Each diagram and circuit board illustration is clearly marked with the assembly number. Assembly numbers are also marked on the mechanical exploded views located in the Mechanical Parts List. The component number is obtained by adding the assembly number prefix to the circuit number.

The Electrical Parts List is divided and arranged by assemblies in numerical sequence (e.g., assembly A1 with its subassemblies and parts, precedes assembly A2 with its subassemblies and parts).

Chassis-mounted parts have no assembly number prefix and are located at the end of the Electrical Parts List.

TEKTRONIX PART NO. (column two of the Electrical Parts List)

Indicates part number to be used when ordering replacement part from Tektronix.

SERIAL/MODEL NO. (columns three and four of the Electrical Parts List)

Column three (3) indicates the serial number at which the part was first used. Column four (4) indicates the serial number at which the part was removed. No serial number entered indicates part is good for all serial numbers.

NAME & DESCRIPTION (column five of the Electrical Parts List)

In the Parts List, an Item Name is separated from the description by a colon (:). Because of space limitations, an Item Name may sometimes appear as incomplete. For further Item Name identification, the U.S. Federal Cataloging Handbook H6-1 can be utilized where possible.

MFR. CODE (column six of the Electrical Parts List)

Indicates the code number of the actual manufacturer of the part. (Code to name and address cross reference can be found immediately after this page.)

MFR. PART NUMBER (column seven of the Electrical Parts List)

Indicates actual manufacturers part number.

CROSS INDEX - MFR. CODE NUMBER TO MANUFACTURER

Mfr. Code	Manufacturer	Address	City, State, Zip Code
01121	ALLEN-BRADLEY CO	1201 SOUTH 2ND ST	MILWAUKEE WI 53204
03508	GENERAL ELECTRIC CO SEMI-CONDUCTOR PRODUCTS DEPT	W GENESEE ST	AUBURN NY 13021
04222	AVX CERAMICS DIV OF AVX CORP	19TH AVE SOUTH P O BOX 867	MYRTLE BEACH SC 29577
04713	MOTOROLA INC SEMICONDUCTOR GROUP	5005 E MCDOWELL RD	PHOENIX AZ 85008
27264	MOLEX INC CORPORATE HQ	2222 WELLINGTON COURT	LISLE IL 60532
31781	EDAC INC	20 RAILSIDE RD	DON MILLS ONT CAN M3A 1A4
57668	ROHM CORP	16931 MILLIKEN AVE	IRVINE CA 92713
71400	BUSSMANN MFG CO MCGRAW EDISION CO	114 OLD STATE RD PO BOX 14460	ST LOUIS MO 63178
80009	TEKTRONIX INC	4900 S W GRIFFITH DR P O BOX 500	BEAVERTON OR 97077
TK0935	MARQUARDT SWITCHES INC	MARQUARDT 67 ALBANY ST	CAZENOVIA NY 13035

Component No.	Tektronix Part No.	Serial/Assembly No. Effective	Dscont	Name & Description	Mfr. Code	Mfr. Part No.
A1	671-0330-00			CIRCUIT BD ASSY:POWER SUPPLY	80009	671-0330-00
A1C1011	281-0774-00			CAP,FXD,CER DI:0.022MFD,20%,100V	04222	MA201E223MAA
A1C2010	281-0774-00			CAP,FXD,CER DI:0.022MFD,20%,100V	04222	MA201E223MAA
A1C2040	281-0774-00			CAP,FXD,CER DI:0.022MFD,20%,100V	04222	MA201E223MAA
A1C2041	290-1186-00			CAP,FXD,ELCTLT:4700UF,20%,50WVDC	80009	290-1186-00
A1C2070	281-0774-00			CAP,FXD,CER DI:0.022MFD,20%,100V	04222	MA201E223MAA
A1C2071	281-0774-00			CAP,FXD,CER DI:0.022MFD,20%,100V	04222	MA201E223MAA
A1C3010	281-0774-00			CAP,FXD,CER DI:0.022MFD,20%,100V	04222	MA201E223MAA
A1C3011	281-0774-00			CAP,FXD,CER DI:0.022MFD,20%,100V	04222	MA201E223MAA
A1C4010	290-1187-00			CAP,FXD,ELCTLT:18000UF,20%,16WVDC	80009	290-1187-00
A1C4060	290-1186-00			CAP,FXD,ELCTLT:4700UF,20%,50WVDC	80009	290-1186-00
A1C5050	281-0774-00			CAP,FXD,CER DI:0.022MFD,20%,100V	04222	MA201E223MAA
A1CR2011	152-0198-00			SEMICOND DVC,DI:RECT,SI,200V,3A,A249	03508	1N5624
A1CR2012	152-0198-00			SEMICOND DVC,DI:RECT,SI,200V,3A,A249	03508	1N5624
A1CR2013	152-0198-00			SEMICOND DVC,DI:RECT,SI,200V,3A,A249	03508	1N5624
A1CR3031	152-0488-00			SEMICOND DVC,DI:RECT,SI,200V,0.5A	04713	SDA317
A1CR3041	152-0198-00			SEMICOND DVC,DI:RECT,SI,200V,3A,A249	03508	1N5624
A1CR3042	152-0198-00			SEMICOND DVC,DI:RECT,SI,200V,3A,A249	03508	1N5624
A1J1010	131-2527-00			TERM SET,PIN:HEADER,1 X 7,0.156 CTR	27264	09-61-1076
A1J1020	131-1078-00			CONN,RCPT,ELEC:CKT BD,28/56 CONTACT	31781	303-056-520-301
A1J1040	131-2484-00			TERM SET,PIN:8 PIN,INSULATED	27264	09-61-1081
A1J1050	131-1078-00			CONN,RCPT,ELEC:CKT BD,28/56 CONTACT	31781	303-056-520-301
A1J1060	131-2575-00			TERM SET,PIN:4 CONTACT,MALE	27264	09-60-1041
A1J1070	131-1078-00			CONN,RCPT,ELEC:CKT BD,28/56 CONTACT	31781	303-056-520-301
A1Q1011	151-0373-00			TRANSISTOR:PNP,SI,TO-127	04713	SJE925
A1Q1080	151-0373-00			TRANSISTOR:PNP,SI,TO-127	04713	SJE925
A1Q3010	151-0436-00			TRANSISTOR:NPN,SI,SEL,TO-172	04713	SJE966
A1Q3080	151-0436-00			TRANSISTOR:NPN,SI,SEL,TO-172	04713	SJE966
A1Q5040	151-0436-00			TRANSISTOR:NPN,SI,SEL,TO-172	04713	SJE966
A1Q5050	151-0373-00			TRANSISTOR:PNP,SI,TO-127	04713	SJE925
A1R3030	303-0202-00			RES,FXD,CMPSN:2K OHM,5%,1W	01121	GB 2025
A1R3031	303-0202-00			RES,FXD,CMPSN:2K OHM,5%,1W	01121	GB 2025
A1R5020	303-0511-00			RES,FXD,CMPSN:510 OHM,5%,1W	01121	GB5115
A1R5030	315-0102-00			RES,FXD,FILM:1K OHM,5%,0.25W	57668	NTR25JE01K0
				CHASSIS PARTS		
C100	283-0959-00			CAP,FXD,CER DI:0.01UF,20%,250VAC	80009	283-0959-00
C200	283-0959-00			CAP,FXD,CER DI:0.01UF,20%,250VAC	80009	283-0959-00
F100	159-0003-00			FUSE,CARTRIDGE:3AG,1.6A,250V,25SEC	71400	MDX 1 6/10
F100	159-0018-00			FUSE,CARTRIDGE:3AG,0.8A,250V,30SEC (OPTION A1,A2,A3,A4,A5 ONLY)	71400	MDL 8/10
P100	119-2679-00			VOLTAGE SEL:AC PWR CONN & FUSE HOLDER	80009	119-2679-00
S100	260-1961-00			SWITCH,ROCKER:DPST,6(4)A,250V	TK0935	1802.1121
T100	120-1772-00			TRANSFORMER,PWR:	80009	120-1772-00
W100	196-3196-00			LEAD,ELECTRICAL:18 AWG,2.0 L,5-4	80009	196-3196-00
W200	196-3175-00			LEAD,ELECTRICAL:18 AWG,5.0 L,9-N	80009	196-3175-00

DIAGRAMS AND CIRCUIT BOARD ILLUSTRATIONS

Symbols

Graphic symbols and class designation letters are based on ANSI Standard Y32.2-1975.

Logic symbology is based on ANSI Y32.14-1973 in terms of positive logic. Logic symbols depict the logic function performed and may differ from the manufacturer's data.

The overline on a signal name indicates that the signal performs its intended function when it is in the low state.

Abbreviations are based on ANSI Y1.1-1972.

Other ANSI standards that are used in the preparation of diagrams by Tektronix, Inc. are:

Y14.15, 1966	Drafting Practices.
Y14.2, 1973	Line Conventions and Lettering.
Y10.5, 1968	Letter Symbols for Quantities Used in Electrical Science and Electrical Engineering.

American National Standard Institute
1430 Broadway
New York, New York 10018

Component Values

Electrical components shown on the diagrams are in the following units unless noted otherwise:

Capacitors = Values one or greater are in picofarads (pF). Values less than one are in microfarads (μF).
Resistors = Ohms (Ω).

The information and special symbols below may appear in this manual.

Assembly Numbers and Grid Coordinates

Each assembly in the instrument is assigned an assembly number (e.g., A20). The assembly number appears on the circuit board outline on the diagram, in the title for the circuit board component location illustration, and in the lookup table for the schematic diagram and corresponding component locator illustration. The Replaceable Electrical Parts list is arranged by assemblies in numerical sequence; the components are listed by component number *(see following illustration for constructing a component number).

The schematic diagram and circuit board component location illustration have grids. A lookup table with the grid coordinates is provided for ease of locating the component. Only the components illustrated on the facing diagram are listed in the lookup table. When more than one schematic diagram is used to illustrate the circuitry on a circuit board, the circuit board illustration may only appear opposite the first diagram on which it was illustrated; the lookup table will list the diagram number of other diagrams that the circuitry of the circuit board appears on.

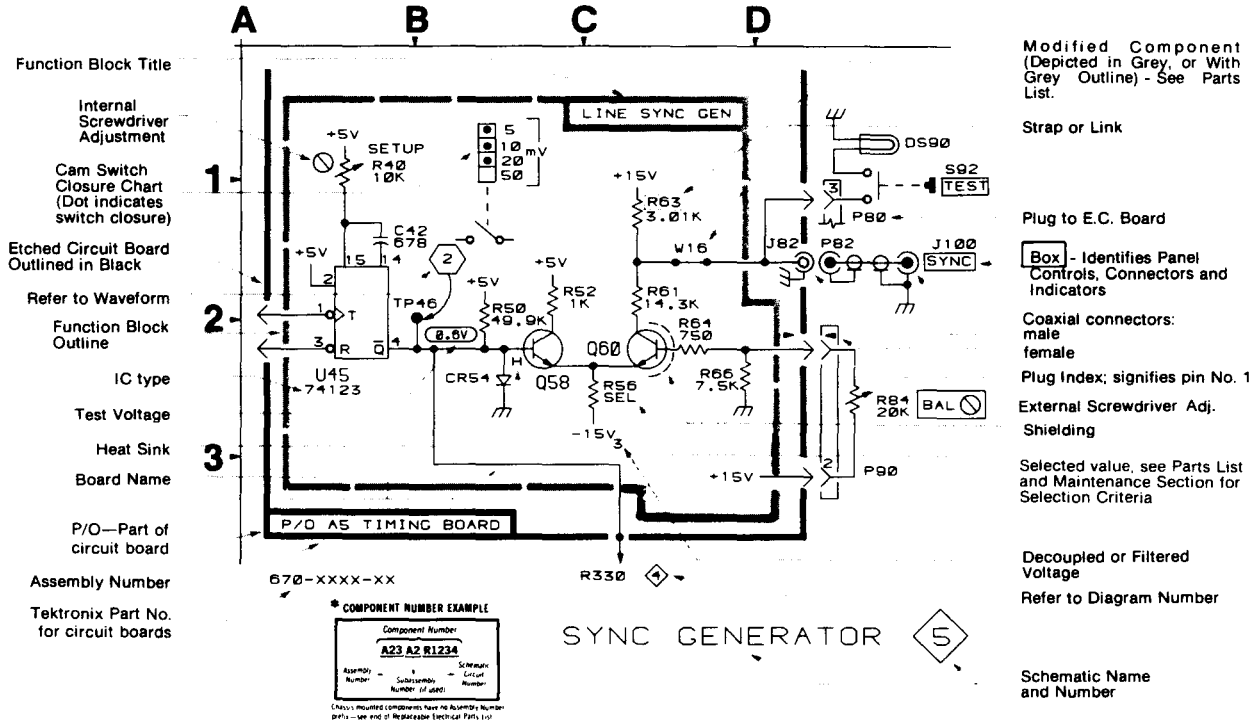

POWER MODULE INTERFACE PIN ASSIGNMENTS

	A	B	
	28	28	
	27	27	
	26	26	
	25	25	
	24	24	
	23	23	
No permanent I/O assignments. Refer to plug-in module manuals for specific assignments.	22	22	No permanent I/O assignments. Refer to plug-in module manuals for specific assignments.
	21	21	
	20	20	
	19	19	
	18	18	
	17	17	
	16	16	
	15	15	
	14	14	
25 Vac winding.	13	13	25 Vac winding.
+33.5 V filter	12	12	+33.5 V filtered dc.
Base lead of PNP Series-Pass.	11	11	Collector lead of PNP Series-Pass.
Emitter lead of PNP Series-Pass.	10	10	±33.5 V common return.
±33.5 V common return.	9	9	±33.5 V common return.
−33.5 V filtered dc.	8	8	−33.5 V filtered dc.
Emitter lead of NPN Series-Pass.	7	7	Collector lead of NPN Series-Pass.
Base lead of NPN Series-Pass.	6	6	No connection.
17.5 Vac winding.	5	5	17.5 Vac winding.
+11.5 V common return.	4	4	+11.5 V common return.
+11.5 V common return.	3	3	+11.5 V common return.
+11.5 V filtered dc.	2	2	+11.5 V filtered dc.
25 Vac winding.	1	1	25 Vac winding.
	A	B	

VIEWED FROM FRONT OF POWER MODULE

(1786-12) 6502-4

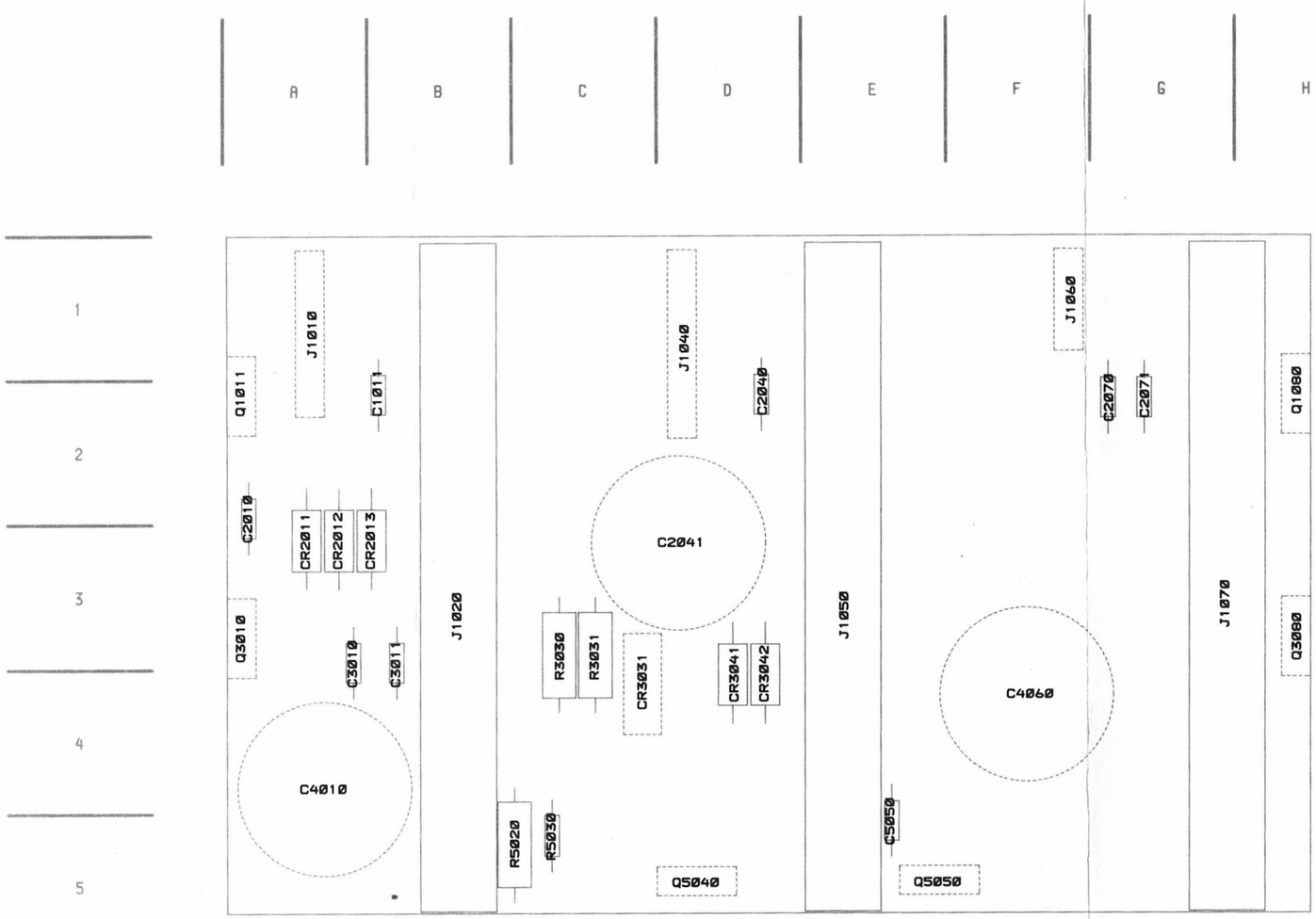

Fig. 6-1. Power Supply circuit board assembly (A1).

A1 ASSY — POWER SUPPLY

CIRCUIT NUMBER	SCHEMATIC LOCATION	BOARD LOCATION
C100	A7	CHASSIS
C200	B7	CHASSIS
C1011	G3	B2
C2010	G7	A2
C2040	H3	D2
C2041	F4	D3
C2070	J8	G2
C2071	J4	G2
C3010	F6	A3
C3011	E6	B3
C4010	E7	A4
C4060	F5	F4
C5050	H8	E5
CR2011	F7	A3
CR2012	E6	A3
CR2013	E6	A3
CR3031	E4	C4
CR3041	F5	D4
CR3042	F4	D4
F100	A5	CHASSIS
J200	B6	CHASSIS
J1010	D3	A1
J1010	D6	A1
J1020	H1	B3
J1040	D3	D1
J1040	D4	D1
J1040	D7	D1
J1050	I1	E3
J1060	D4	F1
J1060	D8	F1
J1070	J2	G3
P100	D3	CHASSIS
P101	D3	CHASSIS
P102	D3	CHASSIS
P103	D4	CHASSIS
P104	D4	CHASSIS
P105	D5	CHASSIS
P106	D5	CHASSIS
P107	D6	CHASSIS
P108	D6	CHASSIS
P109	D7	CHASSIS
P110	D7	CHASSIS
P111	D7	CHASSIS
P112	D7	CHASSIS
P113	D8	CHASSIS
P114	D8	CHASSIS
P115	D8	CHASSIS
P116	D8	CHASSIS
P117	D4	CHASSIS
P118	D4	CHASSIS
P119	C5	CHASSIS
P120	C5	CHASSIS
P121	C5	CHASSIS
P122	C5	CHASSIS
P123	C6	CHASSIS
P700	B6	CHASSIS
Q1011	G5	A2
Q1080	J5	H2
Q3010	G5	A3
Q3080	J5	H3
Q5040	H5	D5
Q5050	H5	E5
R3030	F4	C3
R3031	F5	C3
R5020	E7	B5
R5030	E7	C5
S100	C6	CHASSIS
T100	D3	CHASSIS
W100	B7	CHASSIS
W200	C6	CHASSIS

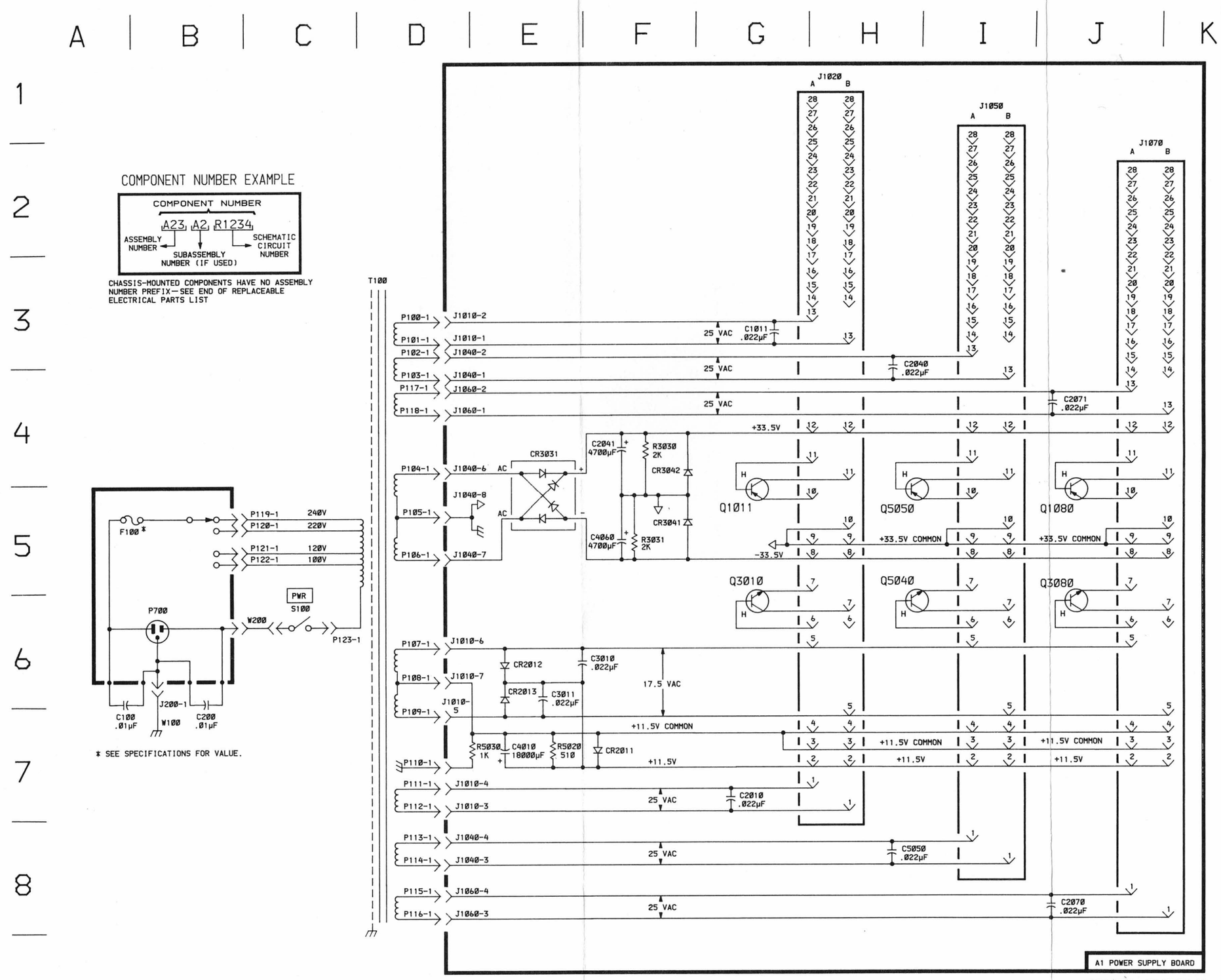

REPLACEABLE MECHANICAL PARTS

PARTS ORDERING INFORMATION

Replacement parts are available from or through your local Tektronix, Inc. Field Office or representative.

Changes to Tektronix instruments are sometimes made to accommodate improved components as they become available, and to give you the benefit of the latest circuit improvements developed in our engineering department. It is therefore important, when ordering parts, to include the following information in your order: Part number, instrument type or number, serial number, and modification number if applicable.

If a part you have ordered has been replaced with a new or improved part, your local Tektronix, Inc. Field Office or representative will contact you concerning any change in part number.

Change information, if any, is located at the rear of this manual.

ITEM NAME

In the Parts List, an item Name is separated from the description by a colon(:). Because of space limitations, an Item Name may sometimes appear as incomplete. For further Item Name identification, the U.S. Federal Cataloging Handbook H6-1 can be utilized where possible.

FIGURE AND INDEX NUMBERS

Items in this section are referenced by figure and index numbers to the illustrations.

INDENTATION SYSTEM

This mechanical parts list is indented to indicate item relationships. Following is an example of the indentation system used in the description column.

1 2 3 4 5 Name & Description

Assembly and/or Component
Attaching parts for Assembly and/or Component

END ATTACHING PARTS

Detail Part of Assembly and/or Component
Attaching parts for Detail Part

END ATTACHING PARTS

Parts of Detail Part
Attaching parts for Parts of Detail Part

END ATTACHING PARTS

Attaching Parts always appear in the same indentation as the item it mounts, while the detail parts are indented to the right. Indented items are part of, and included with, the next higher indentation.

Attaching parts must be purchased separately, unless otherwise specified.

ABBREVIATIONS

Abbreviations conform to American National Standards Institute Y1.1

CROSS INDEX - MFR. CODE NUMBER TO MANUFACTURER

Mfr. Code	Manufacturer	Address	City, State, Zip Code
01536	TEXTRON INC CAMCAR DIV SEMS PRODUCTS UNIT	1818 CHRISTINA ST	ROCKFORD IL 61108
12327	FREEWAY CORP	9301 ALLEN DR	CLEVELAND OH 44125
13511	AMPHENOL CADRE DIV BUNKER RAMO CORP		LOS GATOS CA
16428	BELDEN CORP ELECTRONIC DIV	2200 US HWY 27 SOUTH P O BOX 1980	RICHMOND IN 47374
70903	BELDEN CORP	2000 S BATAVIA AVE	GENEVA IL 60134
71468	ITT CANNON ELECTRIC	10550 TALBERT PO BOX 8040	FOUNTAIN VALLEY CA 92728-8040
72228	AMCA INTERNATIONAL CORP CONTINENTAL SCREW CO DIV	459 MT PLEASANT	NEW BEDFORD MA 02742
74932	INDUSTRIAL SPECIALTIES, INC.		WARREN, MI 48091
77250	ALLIED PRODUCTS CORP PHEOLL MFG CO DIV	5700 W ROOSEVELT RD	CHICAGO IL 60650
78189	ILLINOIS TOOL WORKS INC SHAKEPROOF DIVISION	ST CHARLES ROAD	ELGIN IL 60120
80009	TEKTRONIX INC	4900 S W GRIFFITH DR P O BOX 500	BEAVERTON OR 97077
83309	ELECTRICAL SPECIALITY CO SUBSIDIARY OF BELDEN CORP	213 E HARRIS AVE	SOUTH SAN FRANCISCO CA 94080
86928	SEASTROM MFG CO INC	701 SONORA AVE	GLENDALE CA 91201
93907	TEXTRON INC CAMCAR DIV	600 18TH AVE	ROCKFORD IL 61101
S3109	FELLER ASA ADOLF AG C/O PANEL COMPONENTS CORP	355 TESCONI CIRCLE	SANTA ROSA CA 95401
TK0435	LEWIS SCREW CO	4114 S PEORIA	CHICAGO IL 60609
TK1373	PATELEC-CEM (ITALY)	10156 TORINO	VAICENTALLO 62/45S ITALY
TK1483	TEKA PRODUCTS INC	45 SALEM ST	PROVIDENCE RI 02907
TK1569	GERHART TOOL AND DIE	1116 W ISABEL ST	BURBANK CA 91506

Fig. & Index No.	Tektronix Part No.	Serial/Assembly No. Effective	Dscont	Qty	12345 Name & Description	Mfr. Code	Mfr. Part No.
1-1	426-2222-01			1	FRAME PNL,CAB.:PLUG-IN MODULE	80009	426-2222-01
					(ATTACHING PARTS)		
-2	211-0503-00			4	SCREW,MACHINE:6-32 X 0.188,PNH,STL	TK0435	ORDER BY DESCR
					(END ATTACHING PARTS)		
-3	351-0286-08			3	GUIDE,PL-IN UNI:LOWER,NYLON	80009	351-0286-08
					(ATTACHING PARTS)		
-4	213-0813-00			4	SCREW,TPG,TF:4-20,0.312L,PLASTITE,FLH,STL	72228	ORDER BY DESCR
					(END ATTACHING PARTS)		
-5	134-0197-00			2	PLUG,HOLE:VINYL,BLACK	80009	134-0197-00
-6	367-0382-00			1	HANDLE,BOW:0.125 X 0.75,ALUMINUM	80009	367-0382-00
					(REMOVE FOR OPTION 11)		
					(ATTACHING PARTS)		
-7	134-0196-01			2	KNOB ASSEMBLY:	80009	134-0196-01
-8	211-0008-00			2	SCREW,MACHINE:4-40 X 0.25,PNH,STL	93907	ORDER BY DESCR
-9	210-0993-00			2	WASHER,FLAT:0.143 ID X 0.75 OD X 0.051,BRS	86928	ORDER BY DESCR
					(END ATTACHING PARTS)		
-10	200-3492-00			1	COVER,PLUG-IN:3 WIDE,ALUMINUM	80009	200-3492-00
					(ATTACHING PARTS)		
-11	211-0504-00			2	SCREW,MACHINE:6-32 X 0.250,PNH,STL	TK0435	ORDER BY DESCR
					(END ATTACHING PARTS)		
-12	441-1822-00			1	CHAS,PWR SPLY:	80009	441-1822-00
					(ATTACHING PARTS)		
-13	212-0023-00			6	SCREW,MACHINE:8-32 X 0.375,PNH,STL	TK0435	ORDER BY DESCR
					(END ATTACHING PARTS)		
-14	348-0640-00			6	GROMMET,PLASTIC:BLACK,ROUND,0.188 ID	80009	348-0640-00
-15	214-3026-00			6	SPRING,GROUND:CU BE	TK1569	ORDER BY DESCR
-16	----- -----			1	MARKER,IDENT:MKD GROUND SYMBOL		
					(SEE OPTIONAL ACCESSORIES)		
-17	----- -----			1	CKT BD ASSY:POWER SUPPLY (SEE A1 REPL)		
					(ATTACHING PARTS)		
-18	211-0008-00			6	SCREW,MACHINE:4-40 X 0.25,PNH,STL	93907	ORDER BY DESCR
					(END ATTACHING PARTS)		
					POWER SUPPLY BOARD ASSEMBLY INCLUDES:		
-19	----- -----			3	.CONN,RCPT: (SEE A1J1020,J1050,J1070 REPL)		
-20	214-1593-02			3	.KEY,CONN PLZN:CKT BOARD CONN	80009	214-1593-02
					.(BETWEEN PINS 6 AND 7 OF CONNECTOR)		
-21	----- -----			6	.XISTR: (SEE A1Q1011,Q1080,Q3010,Q3080,		
					.Q5040,Q5050 REPL)		
-22	342-0831-00			6	INSULATOR,PLATE:TRANSISTOR TO-220	80009	342-0831-00
-23	407-3641-00			3	BRKT,CLAMP:ALUMINUM	80009	407-3641-00
					(ATTACHING PARTS)		
-24	211-0102-00			6	SCREW,MACHINE:4-40 X 0.5,FLH,100 DEG,STL	TK0435	ORDER BY DESCR
					(END ATTACHING PARTS)		
-25	----- -----			1	TRANSFORMER,PWR: (SEE T100 REPL)		
					(ATTACHING PARTS)		
-26	212-0516-00			4	SCREW,MACHINE:10-32 X 2.0,HEX HD,STL	77250	ORDER BY DESCR
-27	210-0805-00			4	WASHER,FLAT:0.204 ID X 0.438 OD X 0.032,STL	12327	ORDER BY DESCR
-28	210-0812-00			4	WASHER,FLAT:0.188 ID X 0.375 OD X 0.31	83309	ORDER BY DESCR
-29	166-0227-00			4	INSUL SLVG,ELEC:0.187 ID X 1.5 L,MYLAR	80009	166-0227-00
-30	210-0586-00			1	NUT,PL,ASSEM WA:4-40 X 0.25,STL CD PL	78189	211-041800-00
					(END ATTACHING PARTS)		
-31	134-0159-00			3	BUTTON,PLUG:0.38 DIA,PLASTIC	80009	134-0159-00
-32	200-2467-00			1	COVER,CONNECTOR:ALUMINUM	80009	200-2467-00
					(ATTACHING PARTS)		
-33	211-0244-00			2	SCR,ASSEM WSHR:4-40 X 0.312,PNH STL	01536	ORDER BY DESCR
-34	210-0586-00			2	NUT,PL,ASSEM WA:4-40 X 0.25,STL CD PL	78189	211-041800-00
					(END ATTACHING PARTS)		
-35	----- -----			1	CABLE,ELEC: (SEE W100 REPL)		
					(ATTACHING PARTS)		
-36	210-0586-00			1	NUT,PL,ASSEM WA:4-40 X 0.25,STL CD PL	78189	211-041800-00
					(END ATTACHING PARTS)		
-37	----- -----			1	SWITCH,ROCKER: (SEE S100 REPL)		
-38	----- -----			1	VOLTAGE SEL: (SEE P100 REPL)		
-39	----- -----			2	CAP,FXD: (SEE C100,C200 REPL)		
-40	348-0191-00			4	FOOT,CABINET:BLACK POLYCARBONATE	80009	348-0191-00
					(ATTACHING PARTS)		
-41	212-0082-00			4	SCREW,MACHINE:8-32 X 1.25,PNH,STL	TK0435	ORDER BY DESCR
					(END ATTACHING PARTS)		

Fig. & Index No.	Tektronix Part No.	Serial/Assembly No. Effective	Dscont	Qty	12345 Name & Description	Mfr. Code	Mfr. Part No.
1-42	348-0430-00			4	BUMPER,PLASTIC:BLACK POLYURETHANE	74932	SJ5027
					OPTION 02 INFORMATION		
-43	131-1345-00			1	CONN,RCPT,ELEC:D SERIES,50 CONT,FEMALE	71468	DD-50S
-44	131-0955-00			3	CONN,RCPT,ELEC:BNC,FEMALE	13511	31-279
-45	210-0255-00			3	TERMINAL,LUG:0.391 ID,LOCKING,BRS CD PL	12327	ORDER BY DESCR
-46	131-1857-00			3	TERM SET,PIN:36/0.025 SQ PIN,ON 0.1 CTRS	TK1483	082-3643-SS10
-47	131-1344-00			1	CONN,PLUG,ELEC:D SERIES,50 CONT,MALE	71468	DD-50P
-48	131-1319-00			1	SHLD,ELEC CONN:	71468	DD51216
-49	352-0171-00			36	HLDR,TERM CONN:1 WIRE,BLACK	80009	352-0171-00
-50	195-0993-00			6	LEAD,ELECTRICAL:22 AWG,15.0 L,9-4	80009	195-0993-00
-51	175-3301-00			6	CABLE ASSY,RF:50 OHM COAX,15.0 L,9-4	80009	175-3301-00
-52	214-1593-02			20	KEY,CONN PLZN:CKT BOARD CONN	80009	214-1593-02

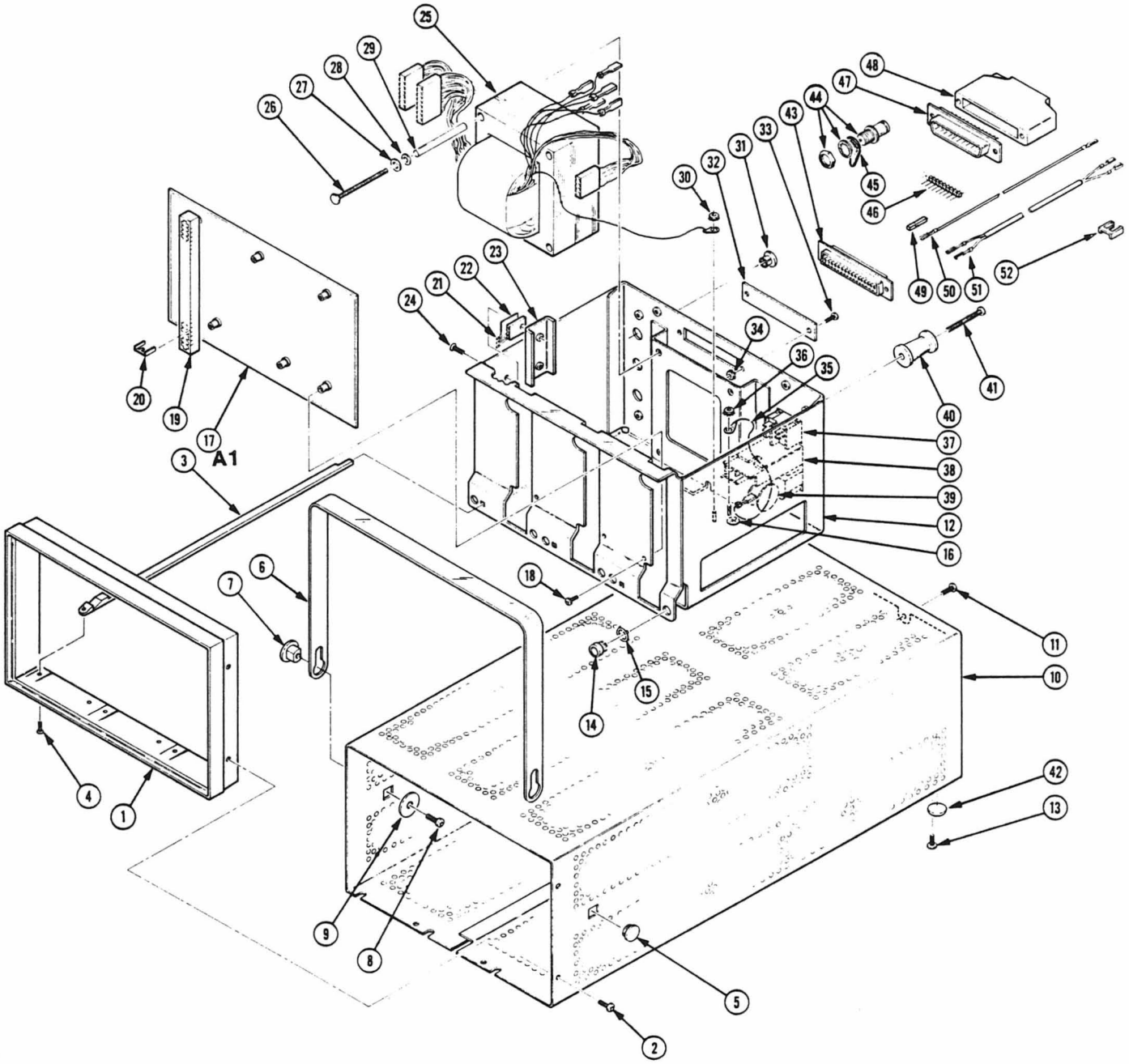

FIG. 1 EXPLODED VIEW

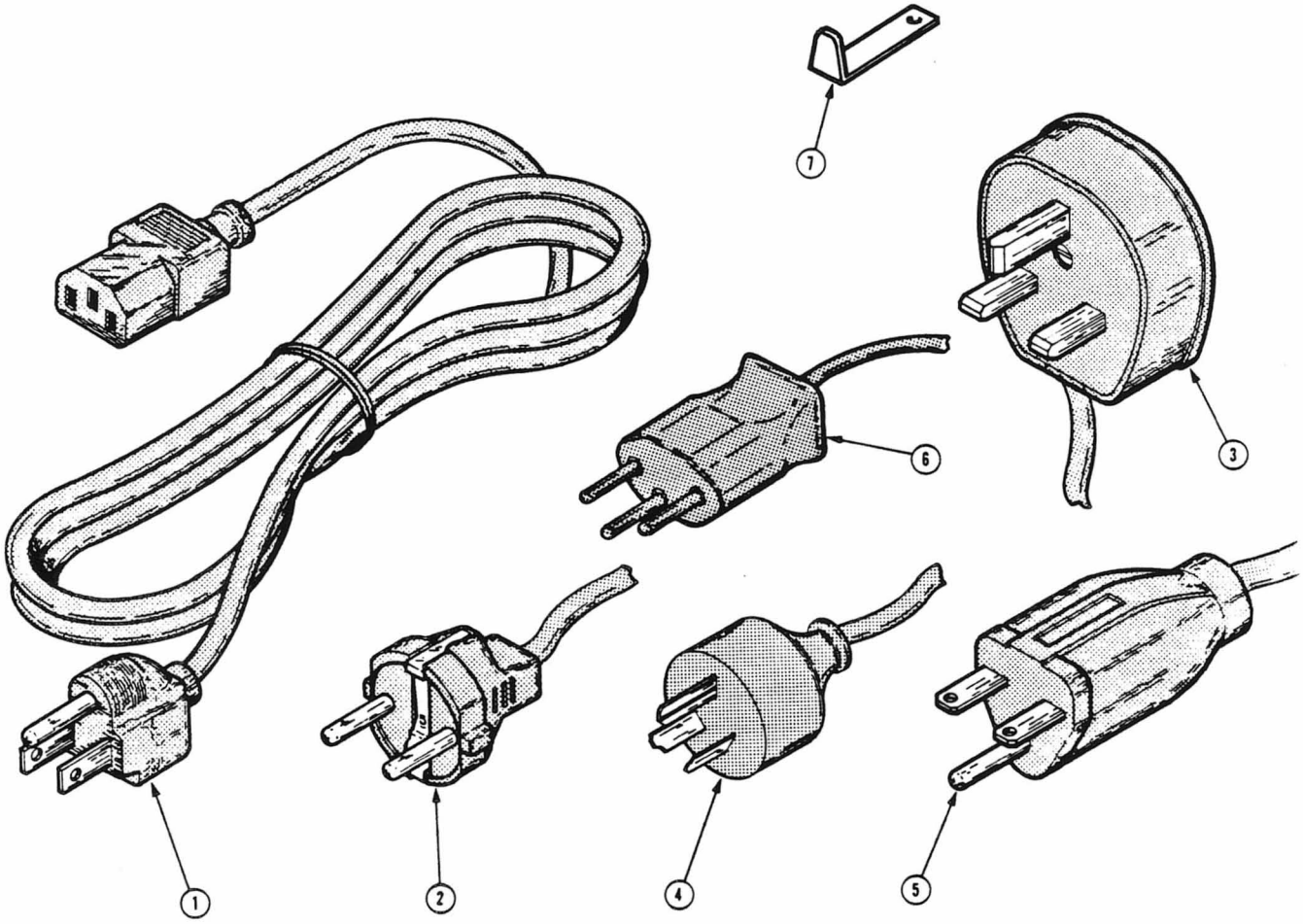

FIG. 2 ACCESSORIES

Fig. & Index No.	Tektronix Part No.	Serial/Assembly No. Effective	Dscont	Qty	12345	Name & Description	Mfr. Code	Mfr. Part No.
2-						STANDARD ACCESSORIES		
-1	161-0066-00			1		CABLE ASSY,PWR,:3,18AWG,115V,98.0 L	16428	CH8481, FH8481
-2	161-0066-09			1		CABLE ASSY,PWR,:3,0.75MM SQ,220V,99.0 L (OPTION A1 ONLY)	S3109	86511000
-3	161-0066-10			1		CABLE ASSY,PWR,:3,0.75MM SQ,240V,96.0 L (OPTION A2 ONLY)	TK1373	24230
-4	161-0066-11			1		CABLE ASSY,PWR,:3,0.75MM,240V,96.0 L (OPTION A3 ONLY)	S3109	ORDER BY DESCR
-5	161-0066-12			1		CABLE ASSY,PWR,:3,18 AWG,250V,99.0 L (OPTION A4 ONLY)	70903	CH-77893
-6	161-0154-00			1		CABLE ASSY,PWR,:3,0.75MM SQ,240V,6A,2.5M L (OPTION A5 ONLY)	S3109	86515000
-7	407-3658-00			2		BRKT,PL-IN LOCK:STAINLESS STL	80009	407-3658-00
	016-0362-02			1		TOOL BOX: (OPTION 13 ONLY)	80009	016-0362-02
	070-6568-00			1		MANUAL,TECH:INSTR,TM503A	80009	070-6568-00
						OPTIONAL ACCESSORIES		
	016-0351-00			1		POUCH,ACCESSORY:	80009	016-0351-00
	016-0620-00			1		COVER,PROT:BLUE,VINYL	80009	016-0620-00
	200-3554-00			1		COVER,FRONT:DUST,TM503A	80009	200-3554-00
	334-3379-04			1		MARKER,IDENT:MKD GROUND SYMBOL (12)	80009	334-3379-04

MANUAL CHANGE INFORMATION

At Tektronix, we continually strive to keep up with latest electronic developments by adding circuit and component improvements to our instruments as soon as they are developed and tested.

Sometimes, due to printing and shipping requirements, we can't get these changes immediately into printed manuals. Hence, your manual may contain new change information on following pages.

A single change may affect several sections. Since the change information sheets are carried in the manual until all changes are permanently entered, some duplication may occur. If no such change pages appear following this page, your manual is correct as printed.

Tektronix®
COMMITTED TO EXCELLENCE

Scanned by Zenith

MANUAL CHANGE INFORMATION

Date: Sept. 24, 1987 Change Reference: M64620, C1/0987

Product: TM 503A Manual Part No.: 070-6568-00

DESCRIPTION Product Group 75

Effective all serial number, please make the following change to the manual:

Add to page 7-4:

OPTIONS

Option 02

020-1611-00	1	Component Kit, Instrument Acc Pkg for TM503A Op 02

Add to page 7-7:

OPTIONAL ACCESSORIES

016-0565-01	1	Carrying Case

Effective serial number B000100 and above, please make the following change to the manual:

Page 5-3:

Change:

F100	159-0016-00	Fuse Cartridge,3AG,1.5,250V,Fast Blow

Tektronix
COMMITTED TO EXCELLENCE

MANUAL CHANGE INFORMATION

Date: **December 18, 1991** Change Reference: **C5/1291**

Product: **TM 503A Power Module Instruction Manual** Manual Part No.: **070-6568-00**

PAGE REPLACEMENT PACKAGE **Product Group 75**

Manual Revision Status

1. Several editions of this manual may exist. Before entering this change, be sure that replacement change information relates to information in your manual.
2. This change affects editions of the manual dated:

   First Printing **AUG 1987**
   Revised Printing **JUL 1988**

Change Instructions

1. To ensure that information is incorporated in the proper sequence, enter Manual Change Information beginning with the earliest changes:
2. To implement this change refer to the table below and follow these instructions:
   a. Remove the pages indicated in the Remove Pages column.
   b. Insert the new pages indicated in the Replace w/Pages column.
   c. Insert the new, additional, pages indicated in the Add Pages column.
3. You may wish to retain this Manual Change Information Sheet at the back of your manual as a record of the change.

Remove Pages	Replace w/Pages	Add Pages	Reason For Change
5-1 through 5-3	5-1 through 5-3		Updated Replaceable Electrical Parts List.

Tektronix®
COMMITTED TO EXCELLENCE

PLEASE CHECK FOR CHANGE INFORMATION AT THE REAR OF THIS MANUAL.

TM 503A
POWER MODULE

INSTRUCTION MANUAL

Tektronix, Inc.
P.O. Box 500
Beaverton, Oregon 97077

070-6568-00
Product Group 75

Serial Number _____

First Printing AUG 1987
Revised DEC 1991

INSTRUMENT SERIAL NUMBERS

Each instrument has a serial number on a panel insert, tag, or stamped on the chassis. The first number or letter designates the country of manufacture. The last five digits of the serial number are assigned sequentially and are unique to each instrument. Those manufactured in the United States have six unique digits. The country of manufacture is identified as follows:

B000000	Tektronix, Inc., Beaverton, Oregon, USA
100000	Tektronix Guernsey, Ltd., Channel Islands
200000	Tektronix United Kingdom, Ltd., London
300000	Sony/Tektronix, Japan
700000	Tektronix Holland, NV, Heerenveen, The Netherlands

REPLACEABLE ELECTRICAL PARTS

PARTS ORDERING INFORMATION

Replacement parts are available from or through your local Tektronix, Inc. Field Office or representative.

Changes to Tektronix instruments are sometimes made to accommodate improved components as they become available, and to give you the benefit of the latest circuit improvements developed in our engineering department. It is therefore important, when ordering parts, to include the following information in your order: Part number, instrument type or number, serial number, and modification number if applicable.

If a part you have ordered has been replaced with a new or improved part, your local Tektronix, Inc. Field Office or representative will contact you concerning any change in part number.

Change information, if any, is located at the rear of this manual.

LIST OF ASSEMBLIES

A list of assemblies can be found at the beginning of the Electrical Parts List. The assemblies are listed in numerical order. When the complete component number of a part is known, this list will identify the assembly in which the part is located.

CROSS INDEX-MFR. CODE NUMBER TO MANUFACTURER

The Mfr. Code Number to Manufacturer index for the Electrical Parts List is located immediately after this page. The Cross Index provides codes, names and addresses of manufacturers of components listed in the Electrical Parts List.

ABBREVIATIONS

Abbreviations conform to American National Standard Y1.1.

COMPONENT NUMBER (column one of the Electrical Parts List)

A numbering method has been used to identify assemblies, subassemblies and parts. Examples of this numbering method and typical expansions are illustrated by the following.

Example a.

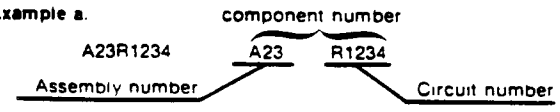

Read: Resistor 1234 of Assembly 23

Example b.

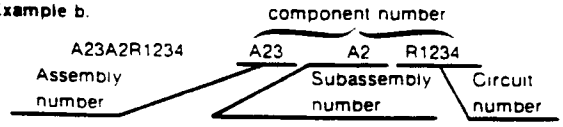

Read: Resistor 1234 of Subassembly 2 of Assembly 23

Only the circuit number will appear on the diagrams and circuit board illustrations. Each diagram and circuit board illustration is clearly marked with the assembly number. Assembly numbers are also marked on the mechanical exploded views located in the Mechanical Parts List. The component number is obtained by adding the assembly number prefix to the circuit number.

The Electrical Parts List is divided and arranged by assemblies in numerical sequence (e.g., assembly A1 with its subassemblies and parts, precedes assembly A2 with its subassemblies and parts).

Chassis-mounted parts have no assembly number prefix and are located at the end of the Electrical Parts List.

TEKTRONIX PART NO. (column two of the Electrical Parts List)

Indicates part number to be used when ordering replacement part from Tektronix.

SERIAL/MODEL NO. (columns three and four of the Electrical Parts List)

Column three (3) indicates the serial number at which the part was first used. Column four (4) indicates the serial number at which the part was removed. No serial number entered indicates part is good for all serial numbers.

NAME & DESCRIPTION (column five of the Electrical Parts List)

In the Parts List, an Item Name is separated from the description by a colon (:). Because of space limitations, an Item Name may sometimes appear as incomplete. For further Item Name identification, the U.S. Federal Cataloging Handbook H6-1 can be utilized where possible.

MFR. CODE (column six of the Electrical Parts List)

Indicates the code number of the actual manufacturer of the part. (Code to name and address cross reference can be found immediately after this page.)

MFR. PART NUMBER (column seven of the Electrical Parts List)

Indicates actual manufacturers part number.

CROSS INDEX – MFR CODE NUMBER TO MANUFACTURER

Mfr Code	Manufacturer	Address	City, State, Zip Code
03508	GENERAL ELECTRIC CO	W GENESEE ST	AUBURN NY 13021
04222	AVX CERAMICS DIV OF AVX CORP	19TH AVE SOUTH P O BOX 867	MYRTLE BEACH SC 29577
04713	MOTOROLA INC	5005 E MCDOWELL RD	PHOENIX AZ 85008-4229
0J7N9	MCX INC	30608 SAN ANTONIO ST	HAYWARD CA 94544
14936	GENERAL INSTRUMENT CORP	600 W JOHN ST	HICKSVILLE NY 11802
18796	MURATA ERIE NORTH AMERICAN INC	1900 W COLLEGE AVE	STATE COLLEGE PA 16801-2723
24165	SPRAGUE ELECTRIC CO	267 LOWELL ROAD	HUDSON NH 03051
26742	METHODE ELECTRONICS INC	7447 W WILSON AVE	CHICAGO IL 60656-4548
27264	MOLEX INC	2222 WELLINGTON COURT	LISLE IL 60532-1613
57668	ROHM CORP	8 WHATNEY	IRVINE CA 92713
71400	BUSSMANN DIV OF COOPER INDUSTRIES INC	114 OLD STATE RD PO BOX 14460	ST LOUIS MO 63178
75498	MULTICOMP INC	3005 SW 154TH TERRACE #3	BEAVERTON OR 97006
75915	LITTELFUSE INC	800 E NORTHWEST HWY	DES PLAINES IL 60016-3049
7W718	MARQUARDT SWITCHES INC	2711 ROUTH 20 EAST	CAZENOVIA NY 13035-1219
80009	TEKTRONIX INC	14150 SW KARL BRAUN DR	BEAVERTON OR 97077-0001
91637	DALE ELECTRONICS INC	2064 12TH AVE	COLUMBUS NE 68601-3632
95238	CONTINENTAL CONNECTOR CORP	34-63 56TH ST	WOODSIDE NY 11377-2121
S3629	SCHURTER AG H	2015 SECOND STREET	BERKELEY CA 94170
TK1997	COLUMBIA GORGE CENTER	2940 THOMPSEN RD	HOOD RIVER OR 97031

Fig. & Index No.	Tektronix Part Number	Serial Number Effect	Discont	Qty	12345 Part Name & Description	Mfr Code	Mfr Part Number
A1	671-0330-00	B010100	B011869		CIRCUIT BD ASSY:POWER SUPPLY	80009	671-0330-00
A1	671-0330-01	B011870			CIRCUIT BD ASSY:POWER	80009	671-0330-01
A1C1011	281-0774-00				CAP,FXD,CER DI:0.022MFD,20%,100V	04222	SA201E223MAA
A1C2010	281-0774-00				CAP,FXD,CER DI:0.022MFD,20%,100V	04222	SA201E223MAA
A1C2040	281-0774-00				CAP,FXD,CER DI:0.022MFD,20%,100V	04222	SA201E223MAA
A1C2041	290-1186-00				CAP,FXD,ELCTLT:4700UF,20%,50WVDC	24165	81D472M050KD5
A1C2070	281-0774-00				CAP,FXD,CER DI:0.022MFD,20%,100V	04222	SA201E223MAA
A1C2071	281-0774-00				CAP,FXD,CER DI:0.022MFD,20%,100V	04222	SA201E223MAA
A1C3010	281-0774-00				CAP,FXD,CER DI:0.022MFD,20%,100V	04222	SA201E223MAA
A1C3011	281-0774-00				CAP,FXD,CER DI:0.022MFD,20%,100V	04222	SA201E223MAA
A1C4010	290-1187-00				CAP,FXD,ELCTLT:18000UF,20%,16WVDC	24165	81D183M016KD5
A1C4060	290-1186-00				CAP,FXD,ELCTLT:4700UF,20%,50WVDC	24165	81D472M050KD5
A1C5050	281-0774-00				CAP,FXD,CER DI:0.022MFD,20%,100V	04222	SA201E223MAA
A1CR2011	152-0198-00				SEMICOND DVC,DI:RECT,SI,200V,3A	03508	1N5624
A1CR2012	152-0198-00				SEMICOND DVC,DI:RECT,SI,200V,3A	03508	1N5624
A1CR2013	152-0198-00				SEMICOND DVC,DI:RECT,SI,200V,3A	03508	1N5624
A1CR3031	152-0488-00				DIODE,RECT:,;BRIDGE,200V,1.5A;2KBP02M	14936	2KBP02M-8
A1CR3041	152-0198-00				SEMICOND DVC,DI:RECT,SI,200V,3A	03508	1N5624
A1CR3042	152-0198-00				SEMICOND DVC,DI:RECT,SI,200V,3A	03508	1N5624
A1J1010	131-2527-00				CONN,HDR PWR::PCB,;FEMALE,STR,1 X 7,0.156	27264	26-51-2073
A1J1020	131-1078-00				CONN,EDGECARD:PCB,;STR,2 X 28,0.156 CTR	95238	X600-11-56Y25GDF-30N
A1J1040	131-2484-00				CONN,HDR PWR:PCB,;MALE,STR,1 X 8,0.156 CTR	26742	3109-11-208-01
A1J1050	131-1078-00				CONN,EDGECARD:PCB,;STR,2 X 28,0.156 CTR	95238	X600-11-56Y25GDF-30N
A1J1060	131-2575-00	B010100	B010253		CONN,HDR PWR::PCB,;MALE,STR,1 X 4,0.156 CTR	27264	09-60-1041
A1J1060	131-2789-00	B010254			CONN,HDR PWR::PCB,;MALE,STR,1 X 4,0.156 CTR	26742	3109-11-204-01
A1J1070	131-1078-00				CONN,EDGECARD:PCB,;STR,2 X 28,0.156 CTR	95238	X600-11-56Y25GDF-30N
A1Q1011	151-0373-00	B010100	B011869		TRANSISTOR:PNP,SI,TO-127	04713	SJE925
A1Q1011	151-0938-00	B011870			TRANSISTOR,PWR:BIPOLAR,PNP;90V,10A,2.5 MHZ	04713	MJF2955
A1Q1080	151-0373-00	B010100	B011869		TRANSISTOR:PNP,SI,TO-127	04713	SJE925
A1Q1080	151-0938-00	B011870			TRANSISTOR,PWR:BIPOLAR,PNP;90V,10A,2.5 MHZ	04713	MJF2955
A1Q3010	151-0436-00	B010100	B011869		TRANSISTOR:NPN,SI,SEL,TO-127	04713	SJE966
A1Q3010	151-0937-00	B011870			TRANSISTOR,PWR:BIPOLAR,NPN;90V,10A,2.5 MHZ	04713	MJF3055
A1Q3080	151-0436-00	B010100	B011869		TRANSISTOR:NPN,SI,SEL,TO-127	04713	SJE966
A1Q3080	151-0937-00	B011870			TRANSISTOR,PWR:BIPOLAR,NPN;90V,10A,2.5 MHZ	04713	MJF3055
A1Q5040	151-0436-00	B010100	B011869		TRANSISTOR:NPN,SI,SEL,TO-127	04713	SJE966
A1Q5040	151-0937-00	B011870			TRANSISTOR,PWR:BIPOLAR,NPN;90V,10A,2.5 MHZ	04713	MJF3055
A1Q5050	151-0373-00	B010100	B011869		TRANSISTOR:PNP,SI,TO-127	04713	SJE925
A1Q5050	151-0938-00	B011870			TRANSISTOR,PWR:BIPOLAR,PNP;90V,10A,2.5 MHZ	04713	MJF2955
A1R3030	303-0202-00				RES,FXD,CMPSN:2K OHM,5%,1W	91637	CMF65-42 2 K OHM 5 P
A1R3031	303-0202-00				RES,FXD,CMPSN:2K OHM,5%,1W	91637	CMF65-42 2 K OHM 5 P
A1R5020	303-0511-00				RES,FXD,CMPSN:510 OHM,5%,1W	91637	CMF65-42 510 OHM 5 P
A1R5030	315-0102-00				RES,FXD,FILM:1K OHM,5%,0.25W	57668	NTR25JE01K0
					CHASSIS PARTS		
C100	283-0959-00				CAP,FXD,CER DI:0.01UF,20%,250VAC	18796	DE7150F103MVA1-KC
C200	283-0959-00				CAP,FXD,CER DI:0.01UF,20%,250VAC	18796	DE7150F103MVA1-KC
F100	159-0016-00				FUSE,CARTRIDGE:3AG,1.5,250V,FAST BLOW (STANDARD ONLY).	75915	31201.5
F100	159-0018-00				FUSE,CARTRIDGE:3AG,0.8A,250V,30SEC (OPTION A1,A2,A3,A4,A5 ONLY)	71400	MDL 8/10
P100	119-2679-00	B010100	B010670		PWR,ENTRY MDL::PNL,SNAP-IN;MALE,IEC,15 AMP	S3629	KEC4303.0093 AND KEC
P100	119-2679-01	B010671	B011126		PWR,ENTRY MDL::PNL,SNAP-IN;MALE,IEC,15 AMP	TK1997	119-2679-01
P100	119-3357-01	B011127			PWR,ENTRY MDL::PNL,SNAP-IN;MALE,IEC,15 AMP	TK1997	119-3357-01
S100	260-1961-00				SWITCH,ROCKER:DPST,6(4)A,250V	7W718	1802.1121
T100	120-1772-00				TRANSFORMER,PWR:PRIM TAPPED 100/120/220/240	75498	128-7065-EA
W100	196-3196-00	B010100	B011710		LEAD,ELECTRICAL:18 AWG,2.0 L,5-4	0J7N9	ORDER BY DESCRIPTION
W100	196-3196-01	B011711			LEAD,ELECTRICAL:18 AWG,2.25 L,5-4	0J7N9	ORDER BY DESCRIPTION
W200	196-3175-00				LEAD,ELECTRICAL:18 AWG,5.0 L,9-N	80009	196-3175-00