Tektronix®
COMMITTED TO EXCELLENCE

COMBINATION EDITION

Wizards Workshop

****
ALL SERVICE QUESTIONS FROM EUROPE, MIDDLE EAST, AND AFRICA SHOULD BE ADDRESSED TO THE EUROPEAN MARKETING CENTER SERVICE GROUP IN THE NETHERLANDS.
****

TEKTRONIX INTERNAL USE ONLY

Published by Service Admin Support
53-027 Ext. 8939 Merlo

May 30, 1980
Issue 10-11

TABLE OF CONTENTS

TABLE OF CONTENTS (CONTINUED)

COMMUNICATIONS DIVISION

MEDICAL

SPECTRUM ANALYZERS

TELEVISION PRODUCTS

SERVICE INSTRUMENT DIVISION

ACCESSORIES

DIGITAL SERVICE INSTRUMENTS

PORTABLES

TABLE OF CONTENTS (CONTINUED)

INFORMATION DISPLAY DIVISION

LABORATORY INSTRUMENT DIVISION

SEMICONDUCTOR TEST SYSTEMS

SIGNAL PROCESSING SYSTEM

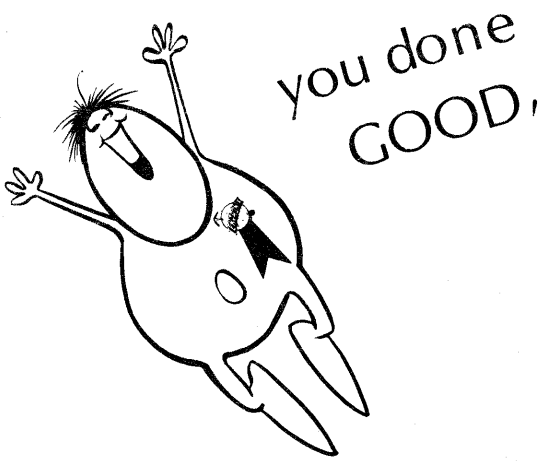

HERE ARE OUR "YOU DONE GOOD"

AWARDS FOR THIS WEEK ....

Congratulations to *BILL BARTLETT* of the Philadelphia Service Center. Bill has just completed a fourteen week Dale Carnegie Course. In the last session Bill was awarded the "Highest Award for Achievements".

******

"*SALT LAKE SERVICE CENTER* is the cleanest, neatest electronics repair facility that I have ever seen." (A quote from one of Tek's satisfied customers.)

******

HIRAM SPRINGER of the Philadelphia Service Center was selected "Measurement Products Technician of the Month" for AP012. Congratulations, Hiram!

******

LEONARD DUNN, Ft. Lauderdale IDG Specialist, received his Associate in Arts Degree from Palm Beach Junior College on May 6, 1980. Congratulations, Leonard!

******

--Editor

PERSONNEL CHANGES

NEW HIRES

JIM DEC has joined the IDD Service Team as a Field Service Specialist I in the Boston Field Office. Jim comes to Tek with two years of electronics experience and was previously employed by MIT Lincoln Laboratories.

Jim is a graduate of Franklin Institute with an associates degree in electronic engineering technology. He is currently enrolled in the evening program at Northeastern University working toward a B.S. in management.

Jim Resides in Watertown and his hobbies include coin collecting, fishing, and chess.

****

JOHN BULLENS has also joined the IDD Service Team in Boston. John comes to Tek with fifteen years of electronic experience and was previously employed by Warren Communications, located in Littleton, Massachusetts. His last position was as a Test Department Supervisor reporting to the Director of Manufacturing.

John is a graduate of Worcester Junior College where he majored in Engineering. He resides in Worcester with his wife and two children.

****

Irvine Service Center would like to welcome *MARTIN DELUKE* to Tek's T&M team. Martin comes to us with experience as a computer technician with Sperry Univac and an Air Traffic Control Communication repairman with the U.S. Marines. Martin is starting his career with Tek as an ET I assigned to 7000 Series products.

****

JAMES LANGSTON and *MICHAEL ROMOLINO* have joined the Field Service Team in Detroit. Both gentlemenwill be Field Service Specialists I as they begin their career with Tek.

****

A hearty welcome to Jim, John, Martin, James and Michael and we wish them a long and successful career with Tektronix.

PROMOTIONS

WAYNE GENTERT has been selected as Area Service Manager for the Irvine Service Area. Wayne will have responsibility for all Service in the corresponding geographical territories of San Diego, Irvine and Woodland Hills.

Wayne came to Tek two years ago as Field Service Supervisor in Woodland Hills. More recently, he has had responsibility for all Service for the Woodland Hills operation.

Previous experience included service in the U.S. Marine Corps as Captain at the recruit depot in San Diego, service in Viet Nam and other assignments. He also holds a BSEE from Oregon State University, a BA from Chapman College in San Diego and is working toward his MBA.

Wayne will continue to operate from the Woodland Hills office and will report to Lyle York. Congratulations and best wishes to Wayne in his new responsibilities.

****

Please join Glen Lazovick in congratulating *DEBORAH BROWN* on her promotion to Jr. Electronics Technician for IDD Field Service in Rockville. Debbie has been with Tek a little over four years and has held several positions within the FOS organization - most recently as Service CSR for Field Service.

Congratulations, Deb!

****

Art Goodell is pleased to announce the appointment of *BETTY LIVINGSTON* as supervisor in the Orlando Field Office. Betty has been with Tek five years, successfully supporting sales and service as a Customer Service Representative. Betty's appointment was effective beginning in AP 013.

Congratulations, Betty!

****

CHUCK GARCIA has been promoted to T&M Service Supervisor in Irvine. Chuck has been with Tek for seven years; starting as a calibrator working his way up to an ET III. His new duties include service for 7000 series, TM500, Portables, and 5000 Series.

Congratulations, Chuck!

****

Please join the Houston Service Center in congratulating *DAVE LANDERS* on his recent promotion to ET-II.

****

PROMOTIONS (CONTINUED)

KEN FROST has accepted the position of Service Operations Analyst in Rockville. Ken will assume his new responsibilities June 1, 1980 and will be reporting to John Toftemark.

Ken brings with him a BA in Business Administration and is currently working on a Masters Degree in that field.

Before joining Tek, he worked with the Ford Motor Company as a Transportation Analyst. Prior to that he held positions as Underwriter for Allstate Insurance Company and as a Claims Researcher for the Ford Motor Company.

Since coming to Tek in September of 1977, Ken has been promoted from Staff Analyst to Business Analyst and again to Operations Analyst on the FOM staff.

Please join John in congratulating Ken and wishing him the best of luck.

****

Frank Dodson, Field Service Supervisor, Santa Clara, has announced the following promotions:

STAN TOMA - promotion to FSS II. Stan has been with the IDD Service Group since February of '79.

VINCE PANGELINAN - promotion to FSS II. Vince has been with the IDD Service group since March of '79.

GORDON JOHNSON - promotion to FSS III. Gordon has been with the Systems group since January of '78.

Congratulations to Stan, Vince and Gordon!

****

--Editor

GENERAL

VIDEOTAPES AVAILABLE

1. P.R.T.S. (PRODUCTION REPORTING & TRACKING SYSTEMS)

   Explains production reporting procedures to the new production worker. Emphasizes importance of accurate reporting in tracking inventory. Demonstrates how to use Data Entry Unit to report common work sequences.

   Running Time: 12 min. — Not For Sale, Ref. No. 16.786

2. THE TEK LABS STORY

   Overview of Tek Labs and its contributions to the company, specifically as it relates to the development of Tek's 7104 Oscilloscope.

   Running Time: 16 min. — Not For Sale, Ref. No. 20.095

3. TEKTRONIX PLANNING AND CONTROL SYSTEMS
   3 (of 4) PROFIT PLANNING-OPERATING PLAN SYSTEM

   This program is designed for Tek managers as an introduction to the Operating Plan system and its relationship to Profit Planning. It will help managers understand what is involved in the Operating plan System, and how it relates to other aspects of Tek Planning with which they may be more involved.

   Running Time: 16 min. — Not For Sale, Ref. No. 20.163

4. TEKTRONIX PLANNING AND CONTROL SYSTEMS
   4 (of 4) PROFIT PLANNING-BUDGETING SYSTEMS

   This program is designed for Tek managers as an introduction to the Budgeting Systems and their relationship to Profit Planning. It will help managers understand what is involved in the Budgeting Systems and how they relate to other aspects of Tek planning.

   Running Time: 22 min. — Not For Sale, Ref. No. 20.164

5. 8002A MICROPROCESSOR DEVELOPMENT LAB

   Describes Tektronix' MDL objectives. Examines features and advantages. Demonstrates the operation of the 8002A. Explains the operation of the 8001.

   Running Time: 35 min. — Not For Sale, Ref. No. 35.355

6. 465B VERTICAL AND HORIZONTAL MODES: 1 (of 2) 465B VERTICAL MODES

   Identifies and explains front-panel Vertical controls of Type 465B Oscilloscope. Demonstrates use of controls; illustrates each vertical mode; demonstrates A-Sweep Trigger View, Cascaded-channel operation; use of 2-axis input.

   Running Time: 15 min. — 068-0104-00

(continued on the following page)

VIDEOTAPE ANNOUNCEMENTS (CONTINUED)

7. 465B VERTICAL AND HORIZONTAL MODES: 2 (of 2) 465B HORIZONTAL MODES

Identifies and explains front-panel Horizontal control of Type 465B Oscilloscope. Demonstrates use of controls; illustrates each horizontal mode; demonstrates Hold-off and B-ends-A operation.

Running Time: 14 min. 068-0105-00

8. SAFETY PRACTICES FOR ELECTRICAL INSTRUMENTS

Describes and illustrates safe practices and procedures for personnel involved in testing, calibrating, troubleshooting, and repair of electrical instruments.

Running Time: 20 min. 068-0106-00

9. 465B/DM44 OPERATION

Demonstrates operation of each function of DM44 installed on 465B. (Viewing Tapes 1 and 2 of the Type 465B Vertical and Horizontal Modes series, along with this tape, is recommended for those seeking operating instructions for the Type 465B/DM44 package.)

Running Time: 9 min. 068-0107-00

10. 468 DIGITAL STORAGE OSCILLOSCOPE OPERATION

Explains and demonstrates operation and application of Type 468B storage modes and controls. (Viewing Tapes 1 and 2 of the Type 465B Vertical and Horizontal Modes series, along with this tape, is recommended for those seeking operating instructions for the Type 468 Digital Storage Oscilloscope.)

Running Time: 23 min. 068-0108-00

11. 308 DATA ANALYZER DUAL LANGUAGE (ENGLISH/GERMAN)

SECTION I: Describes instrument physically and provides brief operational description for each of four operating modes. SECTION II: Details operation of parallel-timing mode and parallel-state mode. SECTION III: Details operation of serial-state mode. SECTION IV: Introduces signature analysis, describes implementation of signature analysis, and details operation of 308 in signature-analysis mode. A second audio track has been added (Track 2) in German.

Running Time: 38 min. 068-0109-00

12. 308 DATA ANALYZER DUAL LANGUAGE (ENGLISH/SPANISH)

SECTION I: Describes instrument physically and provides brief operational description for each of four operating modes. SECTION II: Details operation of parallel-timing mode and parallel-state mode. SECTION III: Details operation of serial-state mode. SECTION IV: Introduces signature analysis, describes implementation of signature analysis, and details operation of 308 in signature-analysis mode. A second audio track has been added (Track 2) in Spanish.

Running Time: 38 min 068-0110-00

(continued on the following page)

VIDEOTAPE ANNOUNCEMENTS (CONTINUED)

13. 833 DATA COMM TESTER-TRAINING PROGRAM

Introduces data communication network testing. Physically describes the 833 and shows how to connect it to the systems under test. Demonstrates asynchronous terminal testing and monitoring of an asynchronous system. Demonstrates synchronous terminal testing, including using the SELECT message in a BISYNC system, displaying a message, POLLING, and receiving a message from the terminal. Demonstrates BERT mode and discusses self-testing, HDLC and NRZI operation. This version of the 833 program is intended for use in a classroom situation. Each aspect of the instrument is discussed separately, and each section is separated by titles, so that the instructor can stop the tape at the end of each section for hands-on practice, discussion or review.

Running Time: 45 min. 068-0111-00

Submitted by--
Herb Doumitt

Inserted by--
Editor

VIDEOTAPE DISTRIBUTION MOVES

The Videotape Distribution Department will relocate from building 43 to building 54 at the Merlo Road Complex during week 21 (May 27-30).

Please excuse the possible delays associated with this move.

New delivery station and phone extensions are listed below:

Videotapes

Karen Swarts	54-031	Ext. 8078 Merlo Road
Mary Byrne	54-031	Ext. 8077 Merlo Road

Audiotapes

Dianne Van Alstine	54-031	Ext. 8079 Merlo Road

Submitted by--
Karen Swarts
Videotape Distribution

Inserted by--
Editor, Ext. 8939 Merlo

SALES TRAINING MOVES

The following personnel in Sales Training will be moving to Building 54 at Merlo Road.

Sales Training Staff - Effective May 21, 1980

NAME	DEL. STN.	TELEPHONE EXT.
Larry Fagg	54-081	8885
Kathi Grant	"	8884

MDL Training - Effective May 21, 1980

Judy Goodman	54-072	8870
Terry Hewitt	"	8881
Holly Johnson	"	8879
Nadene Lowry	"	8872
Dick Lynch	"	8878
Doug Morrill	"	8880

MPSE Training - Effective June 11, 1980

Larry Askew	54-074	8889
Bill Baunach	"	8899
Gary Berger	"	8034
Larry Fuller	"	8886
Judie Gladman	"	8894
Paul Laramee	"	8896
Jim King	"	8898
Paul (PJ) Kleffner	"	8891
Dave Morrisson	"	8887
Bud Nelson	"	8897

IDD Training - Effective June 17, 1980

Raynor Christianson	54-076	8857
Michelle Heckman	"	8859
Denise Hill	"	8951*
Judy Malone	"	8861
Carol (Christensen) Mountain	"	8952*
Phil Vaughn	"	8858
Bob Young	"	8867

*Denotes no change in telephone extension

The switchboard can be bypassed by dialing a 642 prefix with these extensions.

Submitted by--
Larry Fagg
M.S. Training

Inserted by--
Editor

ADMINISTRATIVE SUPPORT

"DOA", DEFINITION

A product which a customer, upon initial receipt, is unable or refuses to use because it does not meet published specifications or reasonable expectations. These situations should be reported as "DOA".

"Normal expectations" includes such things as missing lettering, broken or missing knobs, shipping damage, etc.

DOA's should be reported in the PROBLEM DESCRIPTION/ACTION TAKEN block of the service records. Enter the line item number of the product, the letters "DOA" and a short explanation of why the product is being reported as DOA (see example below under PROBLEM DESCRIPTION/ACTION TAKEN).

Problem Description/Action Taken

Remarks placed in this block of the service records should be keyed to the appropriate product through use of the line item number.

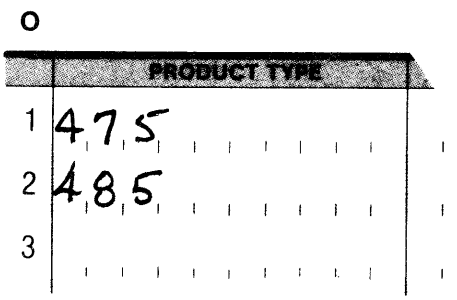

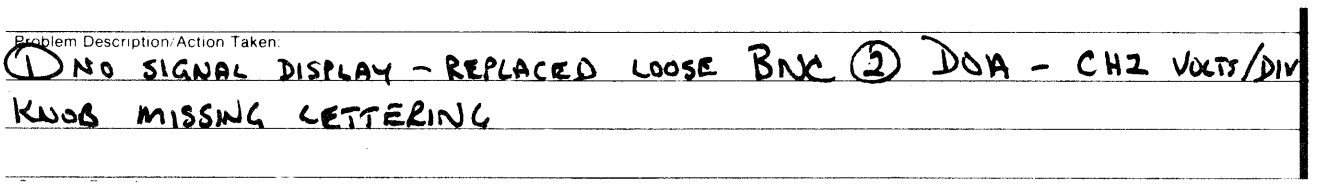

--Bill Duerden
53-027, Ext. 8938

NEW SERVICE RECORDS

In response to inputs received from the field, some changes have been made to the new service records.

ON-SITE (P/N 000-2085-01):

- o Block 42 (acknowledged by) and Block 43 (Signature) have been enlarged.
- o Blocks 44 (Service Center), Block 45 (Technician) and Block 46 (Payroll Code) now print through to the Module Exchange Information and File Copies.

In making these changes, a printing error occurred (Murphy's Law) and the latest batch printed have only 4 spaces in the Payroll Code field (Block 46) instead of the 5 required. Please enter all 5 characters (ignore the Tic marks).

The printer has been notified and the next batch (May 20, 1980) will have the corrected payroll code field.

IN-HOUSE (P/N 000-2032-00):

- o The Shipping Label will be in the packet with the next batch printed (May 20, 1980).

--Bill Duerden
53-027, Ext. 8938 Merlo

DC508 PRESCALER CABLE ASSEMBLIES

There are two cable assemblies which are used on the Prescaler board assembly (A-4) and are not set up as orderable. They are the small coax cables which connect between P-2440 on the Prescaler Board (A4) and P-1770 on the Main Board (A1) and between J2110 on the Prescaler Board (A4) and the Prescaler Input connector J5021. The coax cable assembly between the Input connector and Prescaler board has a right connector on one end and a small peltola connector on the other end. The coax cable assembly between the Prescaler and Main boards has a right angle connector on both ends.

Even though each assembly is not part numbered, they can be obtained by ordering the wire kit for the DC508, PN 198-3793-00. This part number is set up and orderable. The only disadvantage is that you will receive all the cable assemblies used in the DC508.

--Rich Andrusco
94-816, Ext. 1582

7A26 H.F. ADJUSTMENT

Reference: 7A26 Manual P/N 070-1484-01

At serial number B11 and up, circuit components C1339 and C2339 were changed from fixed components to variable capacitors. They are now 7-45pf variable capacitors, P/N 281-0158-00. These two adjustments are not mentioned in the manual on Page 5-7, Item 8, of the calibration procedure. Until a manual change is generated, please insert the adjust of C2339 in Step "f" and C1339 in Step "q" of the above mentioned manual page.

--John Eaton
58/511 Ext. 6902

MEDICAL

MEDICAL MONITOR ACCESSORIES

The three wire limb cable, P/N 012-0459-00, is being deleted as an accessory due to electrode lead breakage.

Customers may order the three wire torso cable P/N 012-0445-00 and a package of three 18 inch detachable electrode wires, P/N 012-0502-00, as a replacement.

Refer to the Price and Accessories Literature handout for more information.

--Dave McKinney
58/511, Ext. 7072

401 DRM POWER SUPPLY SQUEGGING

REFERENCE: 401 Manual P/N 070-2497-00
Schematic 1

The 401 power supply transformer T4020, with date codes 8014 and below, are mis-wired. *THESE SHOULD BE PURGED FROM STOCK.* There was a problem in the winding process. The collector and base windings should be wound on top of each other, minimizing capacitance and allowing oscillation at 10KHZ. In the past there was no control mechanism to ensure that the collector and base windings would be wound on top of one another.

Symptoms of the mis-wired transformers are:

1) Intermittant on/off
2) Slow to turn on
3) Oscillating at 100KHZ

(continued on the following page)

401 DRM POWER SUPPLY SQUEGGING (CONTINUED)

Corrective action and controls are in place to prevent the recurrence of this problem.

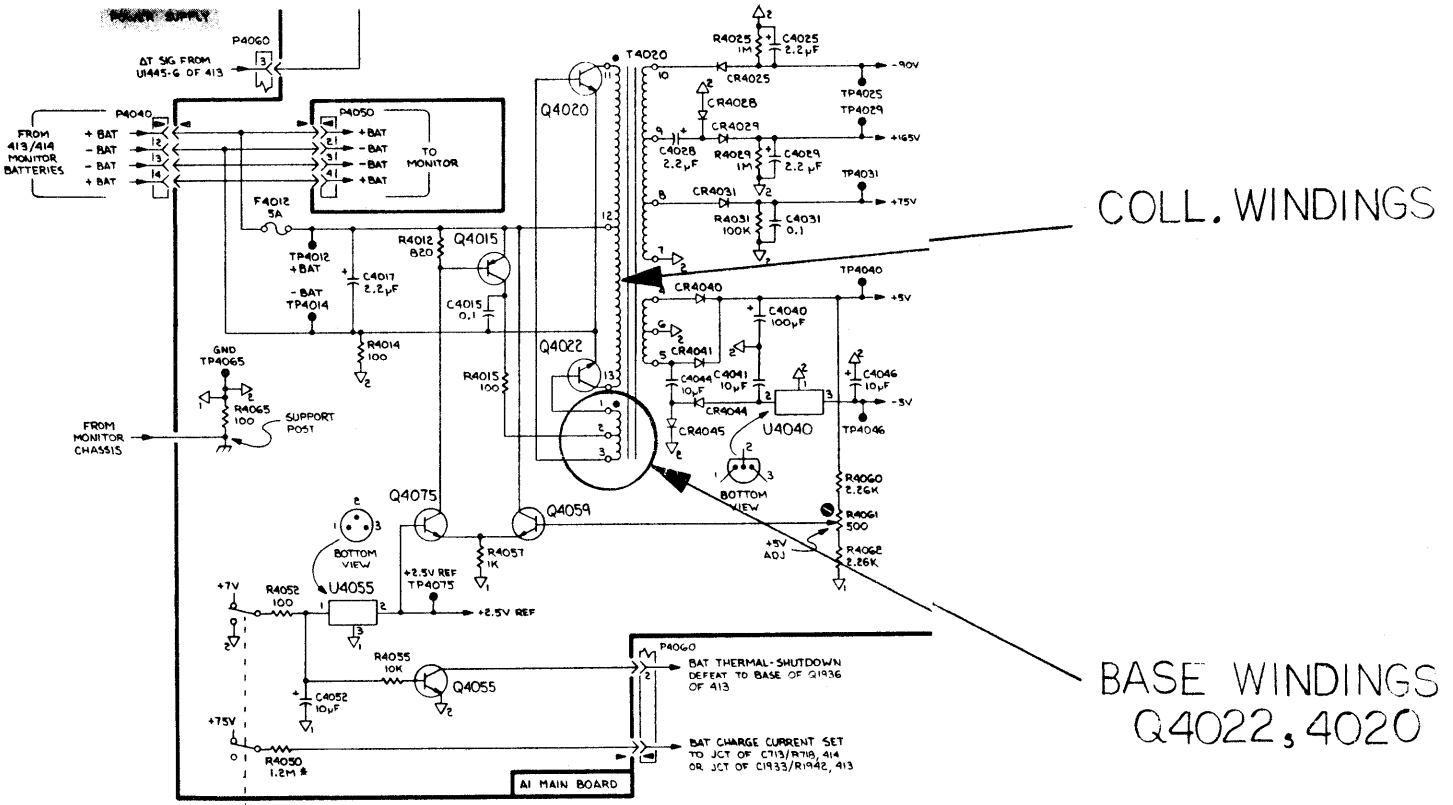

Submitted by--
Terry Brady/Jerry Harrington
Rockville

Inserted by--
Dave McKinney
58-511, Ext. 7072

408/412/414 CABINET FRAMES

Reference: 408 S/N B010100 - B183014
412 S/N B010100 - B192624
414 S/N B010100 - B085244

There is an 050 kit available for replacing the riveted type frame assembly, P/N 426-1034-00 and P/N 426-1034-01, with a screw type frame. The kit part number is 050-1081-01.

--Dave McKinney
58/511, Ext. 7072

414 MEDICAL MONITOR (OPT. 4)

Reference: Instruction Manual P/N 070-2042-01
Page 3 of 6 in the Manual Change Information

The Extension Shaft for the ECG board (Opt. 4) was listed in the Instruction Manual in error. Change the Extension Shaft, P/N 384-1294-00, to P/N 384-1337-00. Corrective action is in process.

--Dave McKinney
58/511, Ext. 7072

PA1, REPLACEMENT OF Q3021, Q3022 AND Q4021

Reference: PA1 Manual P/N 070-2672-00
Modification PC-9 and M36408

Q3021, Q3022 and Q4021 were changed from P/N 151-0211-00 to P/N 151-0103-00. This change requires changes to several other components. When replacing Q3021, Q3022 or Q4021, order kit P/N 050-1224-00.

Effective Serial Numbers are B010100 - B019999.

--Steve Schmelzer
58/511, Ext. 6507

1501, 1502, 1503, BATTERY METER REPLACEMENT KITS

Reference: 1501 Manual P/N 070-1206-00
1502 Manual P/N 070-1792-00
1503 Manual P/N 070-1865-00

Modification: M30462, S32321, C31446

Battery meter, P/N 149-0044-05, replaces the battery meter, P/N 149-0031-00, in the 1501, 1502, and 1503. See the following chart for kits required to change the meter.

INSTRUMENT	NEW METER	REPLACES	KIT NUMBER
1501	149-0044-05	149-0031-00	050-1073-01
1502	149-0044-05	149-0031-00	050-0988-01
1503	149-0044-05	149-0031-00	050-0988-01

--Steve Schmelzer
58/511, Extl 6507

1502, 1503 VERTICAL AMP/SLOW RAMP CIRCUIT BOARD REPLACEMENT

Reference: 1502 Manual P/N 070-1792-01
1503 Manual P/N 070-1865-01
Modification M35279

Replacement of the Vertical Amp/Slow Ramp circuit board requires replacement of M1071, battery level meter. To replace the Vertical Amp/Slow Ramp circuit board, order appropriate kit from the following table.

INSTRUMENT	NEW CIRCUIT BOARD	REPLACE	KIT NUMBER
1502	670-3009-02	670-3009-00, 01	050-1169-00
1503	670-3895-02	670-3895-00, 01	050-1170-00

Effective Serial Numbers: 1502 - B010100 & Up
1503 - B010100 & Up

--Steve Schmelzer
58/511, Ext. 6507

1503, REPLACEMENT OF Q1558 OR Q1578

Reference: 1503 Manual P/N 070-1865-01
Modification M36273

To replace Q1558 and/or Q1578 order parts kit 050-1215-00. The kit includes a transistor, a diode and instructions. Effective serial numbers are B010100-B083168.

--Steve Schmelzer
58/511, Ext. 6507

SPG/TSP, PART NUMBER FOR CABLE SETS AND WIRING HARNESS

The following part numbers are provided to aid in installation of SPG and TSP modules.

	INSTRUMENT	PART NUMBER	NOMECLATURE
1)	SPG 1, 11	175-3027-00	RF Cable Assembly
2)	SPG 2, 11, 12	198-3290-00	Wire Set
3)	SPG 1, 2, 11, 12	198-3291-00	Wire Set
4)	SPG 1, 2, 11, 12	179-2419-00	Pulse Output Wire Set
5)	TSP1/11	179-2642-00	Interconnecting Wire Set

SPG & TSP modules that are shipped alone (i.e. not as part of a complete 1410 package) normally have all cables necessary for installation. If the cables are not received with the module, they may be ordered using the numbers above. To install a SPG 1/11 items 1, 3 and 4 are needed. For SPG 2/12 items 1, 2, 3 and 4 are needed. For a TSP 1/11 only item 5 is needed.

A manual change request has been generated to incorporate these numbers.

--Steve Schmelzer
58/511, Ext. 6507

650A/650HR SERIES, MODIFICATION TO PREVENT SPOT BURNING OF CRT PHOSPHOR

Reference: 650A Manual P/N 070-2234-00
650HR Manual P/N 070-2646-00
Modification 37966

650A/650HR series instruments may exhibit a bright spot in the center screen immediately after shutoff. A modification has been developed to insure that the blanking circuit shuts off the beam before the sweep circuits shutoff. The modification consists of adding a small piggy back circuit board to the blanking board (P/N 670-1603-03). This "Blanking Correction Board" is currently being added to production instruments. The part number of the added blanking Correction Board is 670-6588-00. The board is attached by soldering the three square pins on the bottom of the Blanking Correction Board to the following locations:

Pin 1 - Junction of CR6139 cathode and R6113 (10K ohm)
Pin 2 - Junction of CR6149 anode and CR6109 anode
Pin 3 - Junction of R6179 (6.2Kohm) and R6111 (1K ohm)

Also CR4015, P/N 152-0107-00 diode is added to the horizontal output board. Lift the end of R4020 closest to R4030. Solder CR4015 anode to the board and teepee the cathode end to the lifted end of R4020.

See the following drawings for the layout of parts and updated schematics. The Blanking Board, P/N 670-1603-03 will change suffix numbers when the Blanking Correction Board parts are incorporated into the Blanking Board. A schematic and new board layout is included with this article.

(continued on the following page)

650A Series

Circuit Numbering Sequence

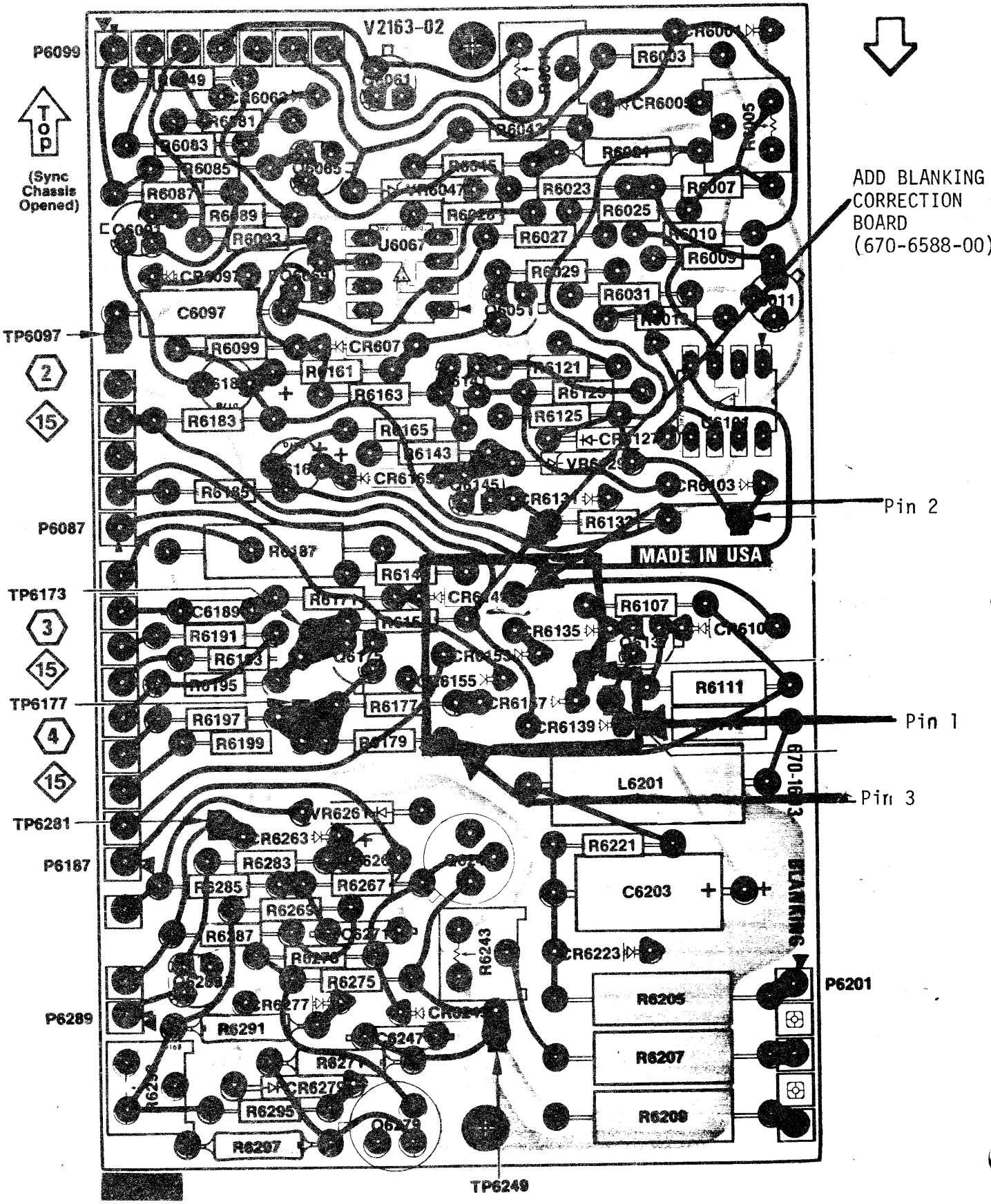

A11. BLANKING CIRCUIT BOARD

2234-68A

REV. A JAN 1978

The Interium Solution of adding a Blanking Correction Circuit Board was used in instruments with the following Serial Numbers.

650A Series;	B070000 and up
650HR Series;	B030000 and up
653A & 656A;	B040000 and up
653HR & 656HR;	B030000 and up

The 670-6588-00 (Blanking Correction Circuit Board) consists of;

CRT.NO.	QUANT.	PART NO.	DESCRIPTION
	3	131-0589-00	Terminal Pin
Q6184	1	151-0444-00	Transistor, MPSA42
CR6184	1	152-0141-02	Semicond. Device, 30v, 150MA, 1N4152
C6183	1	283-0067-00	1000PF, 10%, 200v, Fixed Ceramic Capacitor
C6184	1	290-0745-00	22uf, 25v, Fixed Electrolytic Capacitor
R6186	1	315-0105-00	1m ohm, 5%, 0.25w Resistor
R6184	1	315-0512-00	5.1k ohm, 5%, 0.25w Resistor
	1	388-7064-00	Raw Circuit Board

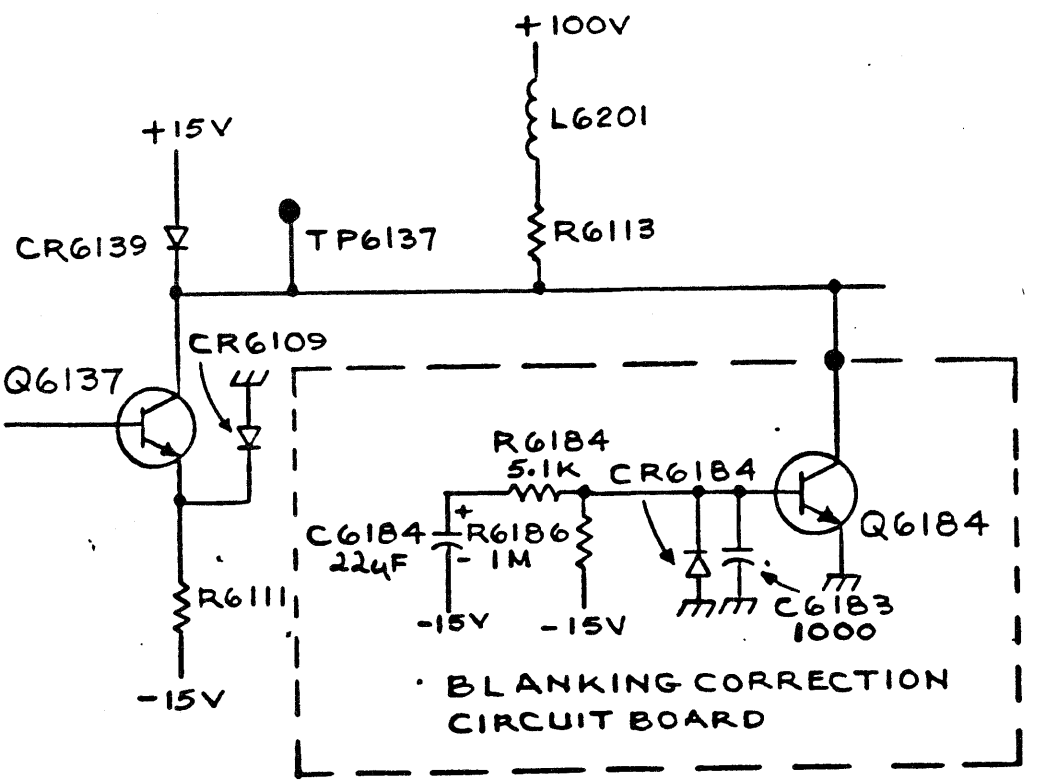

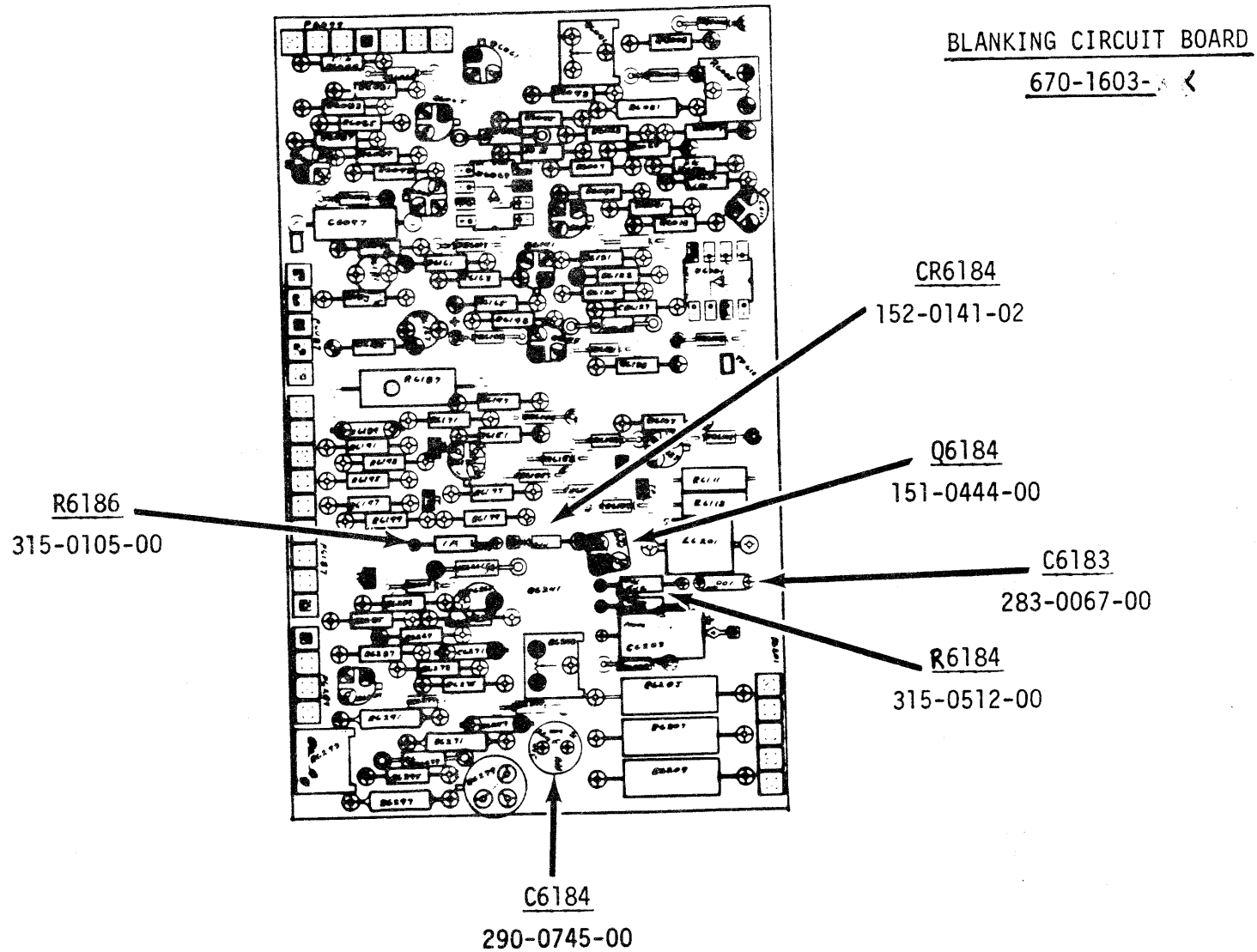
BLANKING CIRCUIT BOARD
670-1603-
CR6184
152-0141-02
Q6184
151-0444-00
R6186
315-0105-00
C6183
283-0067-00
R6184
315-0512-00
C6184
290-0745-00

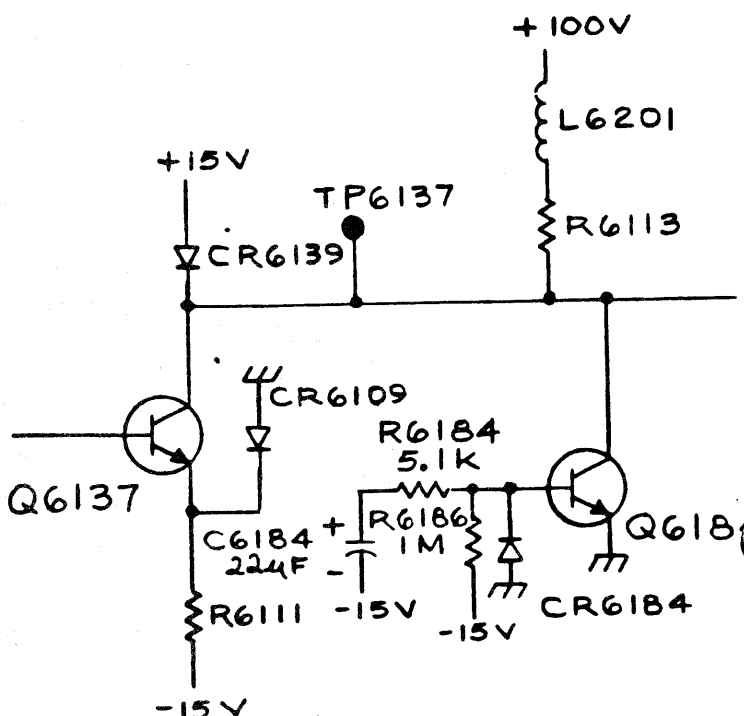
+100V
L6201
+15V
TP6137
R6113
CR6139
CR6109
R6184
5.1K
Q6137
C6184
22µF
R6186
1M
Q6184
R6111
-15V
-15V
CR6184
-15V

HORIZONTAL OUTPUT CIRCUIT BOARD

670-1601-03

ADD

CR4015

152-0107-00

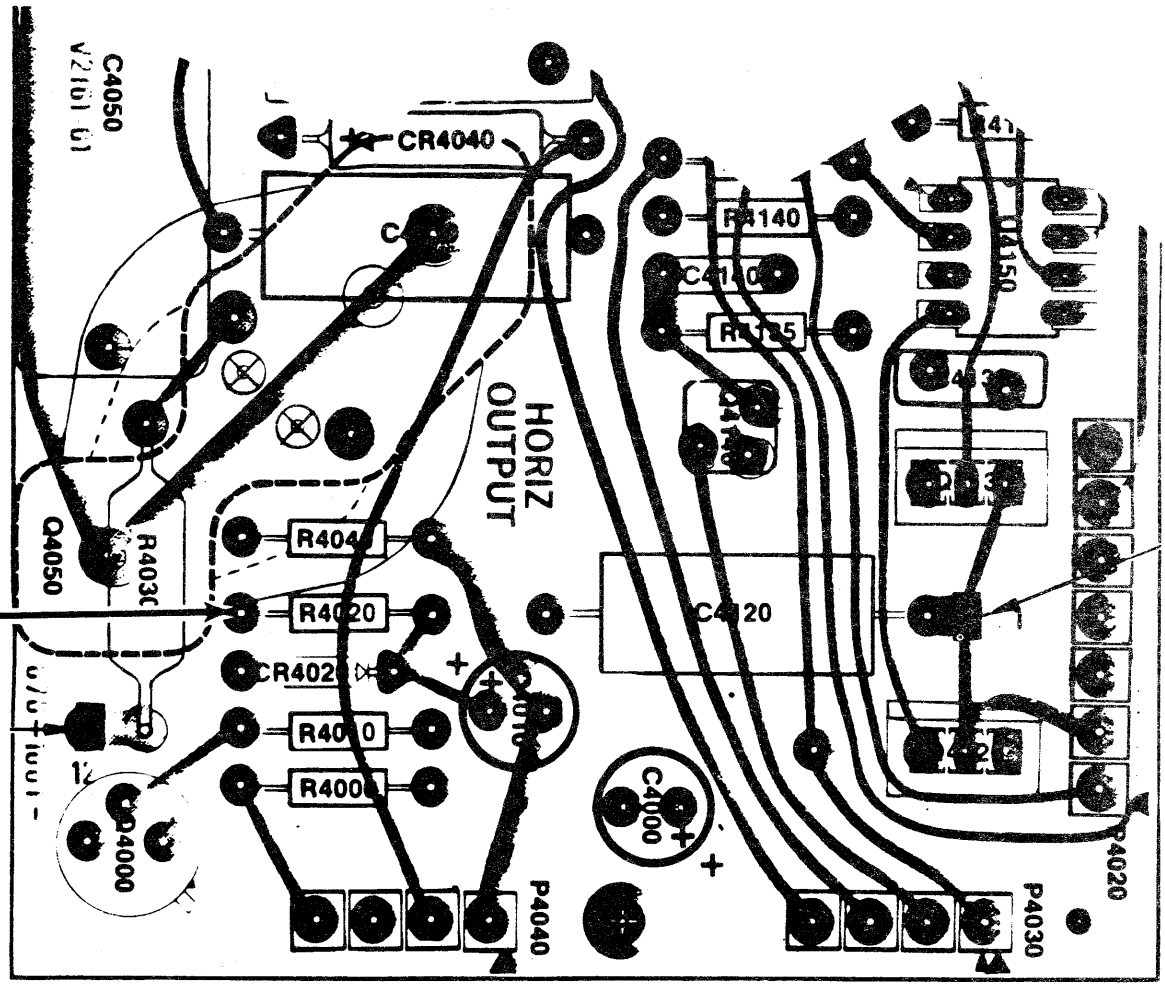

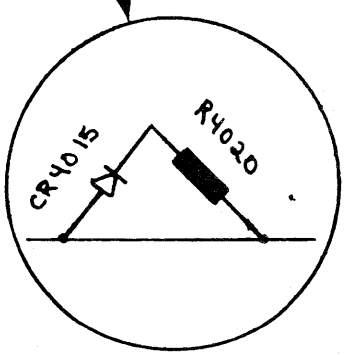

CR4015 AND R4020
ARE TEEPEED OVER
CIRCUIT BOARD

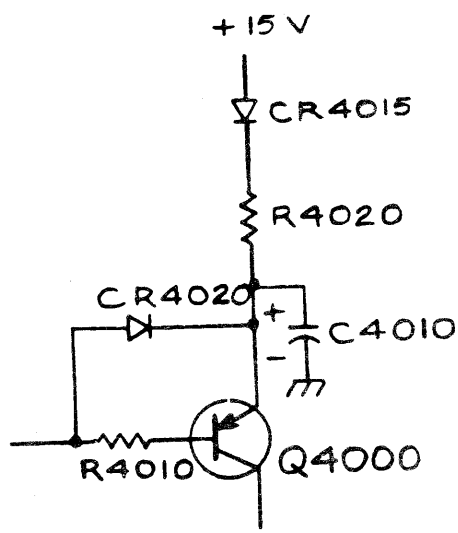

--Steve Schmelzer
58/511, Ext. 6810

May 30, 1980
Issue 10-11

650A/670A COLOR MONITORS, PART NUMBER CHANGE FOR Q5026, Q5126, Q5915 & Q6137

Reference: Modification M39659

The 151-0292-01 transistor may fail due to Beta degradation with time. When replacing Q6137 in the 650A/650HR series or Q5026, Q5126 or Q5195 in the 670A/670A-1/671A use part number 151-0444-03. The 151-0292-01 should no longer be used in these locations. Replace these transistors with the new part number as they come in for service.

--Steve Schmelzer
58/511, Ext. 6507

670A SERIES, MODIFICATION TO HORIZONTAL OUTPUT CIRCUITS - REPLACEMENT ARTICLE

Reference: 670A Manual P/N 070-2201-01
670A-1 Manual P/N 070-2202-00
Modification M39864

A previous article in WIZARD'S WORKSHOP ISSUE 10-9 outlined a modification to the horizontal output circuit. The instructions for adding the diodes were incorrect. The article is reproduced here with the corrections inserted in the text. The schematic with the original article is correct.

Q5030, Q5275, Q5280 and F5042 are high failure rate components in the 670A Series monitors. Q5030 is failing because of timing problems which causes some transistors used in this location to turn on during flyback. This would open the fuse (F5042) and in most cases, destroy the transistor. Q5275 and Q5280 apparently fail due to a high induced voltage present during flyback.

To correct these malfunctions, change R5085 from 56 ohms to 27 ohms (303-0270-00) and change L5085 from 10 microhenries to 5 microhenries (108-0554-00). Add diodes CR5275 and CR5280 (both 152-0398-00) across Q5275 and Q5280, respectively. Connect the cathode of CR5275 to emitter of Q5275 and connect anode of CR5275 to collector of Q5275. Connect cathode of CR5280 to collector of Q5280 and connect anode of CR5280 to emitter of Q5280. (See the following schematic for changes.) A parts kit is available for both modifications.

To replace a failed Q5030 order P/N 050-1369-00. This kit contains Q5030, F5042, the new coil and the new resistor. To replace Q5275 and Q5280 after failure order P/N 050-1370-00. This kit contains transistors and diodes.

The modifications described here should be added to any 670A Series monitor as a preventative measure. Also, add these modifications when replacing any failures to Q5030, Q5275, Q5280 or F5042.

Modification installed by manufacturing at:

670A	B031140
670A-1	B020210
671A	B031140

(continued on the following page)

ADD:

CR5275	152-0398-00	SEMICOND DEVICE:SILICON,200V,1A,1N4935
CR5280	152-0398-00	SEMICOND DEVICE:SILICON,200V,1A,1N4935

DIAGRAM 12 HORIZONTAL DEFLECTION (670A & 671A) DIAGRAM 5b 670A-1 SERIES

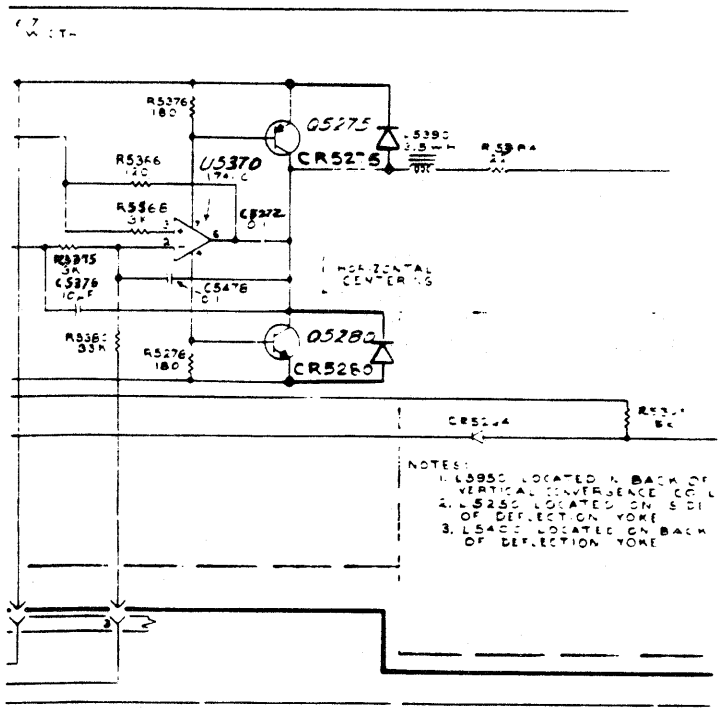

--Steve Schmelzer
58/511, Ext. 6507

670A/671A, UNWANTED VERTICAL LINE IN YELLOW COLOR BAR

Reference: 670A/671A Manual P/N 070-2202-00

Some 670A/671A color monitors may exhibit a very faint light vertical line approximately 2.5 inches (6.35cm) from the left edge of the screen (in the yellow bar). The line is caused by a high ground current spike generated when Q5001 turns off. This line may become slightly more visible with the addition of the modification to the horizontal output circuits (see article in this issue).

The line can be made less visible by replacing C5288, P/N 285-0515-00, 0.022 microfarad capacitor with P/N 285-0937-00, 0.068 microfarad capacitor and also by reducing resistance to ground from the deflection board by tightening the grounding screws and inspecting the other grounding connections on the deflection board. The locations of possible grounding problems and the location of C5288 are shown on the following drawing.

Manufacturing is installing the new part number in current instruments. Serial numbers will be published when available.

(continued on the following page)

670A/671A, UNWANTED VERTICAL LINE IN YELLOW COLOR BAR (CONTINUED)

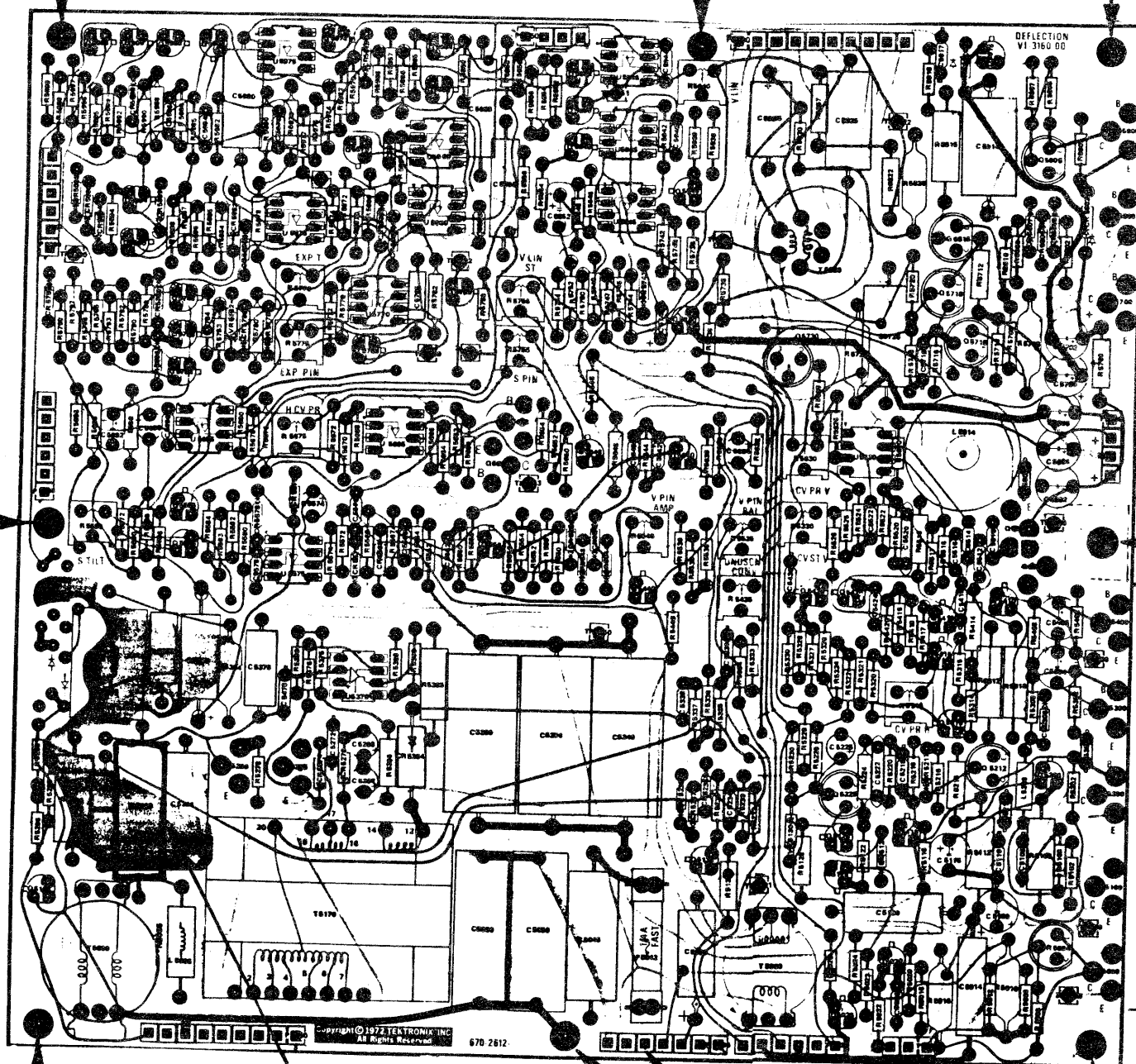

CHANGE C5288 TO
285-0937-00

✳ CHECK GROUND CONNECTION

--Steve Schmelzer
58/511, Ext. 6507

May 30, 1980
Issue 10-11

ACCESSORIES

P6058 PROBE TIP REPLACEMENT AND UPDATE KIT

Reference: Manual P/N 070-3470-00

The 050 Kit P/N 050-0645-01 will allow replacement of the probe tip and update the probe from a P6058 to a P6058A. All instructional information is enclosed in the kit.

--Dave McKinney
58/511, Ext. 7072

832 INTERMITTENT ERROR CODE 16 AND/OR PARITY ERRORS

If you are experiencing either Intermittent Error Code 16 or front panel Parity Errors, suspect your "USART" circuits (U1325 and U1332). Both problems can be caused by either a defective device or defective socket.

--Rich Andrusco
94-816, Ext. 1582

T900 INTERMITTENT ATTENUATOR UPDATE #2

Reference: WIZARD Article: T912, T921, T922/R, T932A, T935A, 442 Intermittent Vertical Attenuator - Dec. 21, 1979, Issue 9-25
WIZARD Article: T900 Intermittent Attenuators Update - Jan. 11, 1980, Issue 10-1

The retainer bars, P/N 343-0564-00 (CH 1) and P/N 343-0565-00 (CH 2) have again been found to be out of tolerance. The distance from the bottom of the bearing surface to the bottom of the retainer bar is too wide causing the contacts to become intermittent and in some cases, not to make contact at all. The contacts close to the retainer bar bearing are most affected.

The warehouse stock has been checked and all defective parts have been removed. Please purge all Service Center stock of these two parts and reorder as necessary.

Thanks to Duane Tinsley, Rockville Service Center and Steve Biron, Atlanta Service Center for bring this defect to my attention.

--Mike Laurens
58-511, Ext. 7012

19" CRT GROUND WIRE DRESSING CAN AFFECT STORAGE BOARDS

Reference: Wizard Article titled "4014/15 CRT Ground Wire Dressing Affects Storage Board, "May 2, 1980, Issue 10-9 page 23
4014/15 Service Manual 070-2302-00
Service Manuals for other 19" Displays

A Storage Board failure which could be common to all 19" CRT Displays has been occurring on 4014/15 Terminals Storage Boards. These failures are caused by the ground wire on the CRT shorting to the anode button on the CRT. When this happens it will distroy parts on the Storage Board.

Please refer to the Wizard Article referenced above for details. To cross reference failed parts or correct ground wire dressing, refer to Wizard and the procedures, schematics, parts lists and drawings (pictures) in both the 4014/15 manual and the manual for the failed Display.

--Dennis Painter
63/503, ext. 3597

4052 SERVICE UPDATE PROGRAM DELETED (REPLACES ARTICLE PRINTED IN MAY 2 ISSUE)

A Service Update Program was set up to provide free updates for the customers who had a 4052 with Level 3.1. The update would take them to L3.2. Level 3.2 has been replaced by Level 4.1 an 050-1282-01 kit which is free only to warranty, maintenance agreement, or rental customers. All other customers who request or need the latest level of firmware will be charged for parts and labor. If a customer has a hardware failure on the MAS board which contains a level of firmware lower than 4.1 and the exchange board you install in the customers unit has L4.1 then charge only for exchanging the board. Do not charge for the firmware update in addition to the exchange price of the board.

This procedure becomes effective May 5, 1980.

--Del Moore
63/503, ext. 3930

4631/32: LOSS OF SLACK LOOP

The loss of the slack paper loop in the 4631 and 4632 hardcopy units continues to be a concern. A description of the loop and its importance in the products was given recently by Steve Jones of Huntsville:

> "The copier is designed such that the speed at which the paper is drawn through the drive rollers is a little greater than the speed which the paper is drawn into the processor assembly. This keeps a "loop" of paper between the roller and the processor, so that when the correct pulse count is reached (4631), the "drive roller" signal goes false, and the drive roller clutch is de-energized. The drive roller will stop turning at the end of seven (7) revolutions of the interrupter wheel.
>
> "If the processor is pulling faster than the paper is coming through drive rollers, then the loop is pulled out and the paper is pulled tight between the two. Now, instead of the interrupter wheel stopping after seven (7) revolutions, the paper will keep it turning. As long as the wheel is turning we continue to get stepper pulses and our cut cycle is never initiated. This dumps the whole roll of paper on the floor if nobody is there to stop it."

Among the causes for the loss of the slack loop have been:

- Dirty, worn or undersized drive or pinch rollers.
- Bent or damaged front paper guides.
- Missadjusted knife actuator cams.
- Worn drive roller bearings.
- Insufficient pinch roller pressure.
- Excessive drag from damaged paper cassettes.
- Buildup of deposits on the processor rollers.
- Wrong number of teeth on processor sprockets.

The latest addition to this list is a <u>thick processor belt</u>. This has been isolated as the cause of at least one instrument's loss of slack loop and resultant end-of-copy cut failure.

Thanks go to Steve Jones for his effort in defining this problem.

--George Kusiowski
63/503, ext. 3928

4662 OPTION 20 AVAILABLE

Option 20 is now available in a field installable kit, 020-0618-00, for 4662's above serial number B056305 only.

Option 20 8K Buffer, provides convenience to those operators who do not wish to use block mode and want to spend minimum time connected to the CPU. With Option 20 installed about 4 times the amount of information can be sent in continuous mode without overflowing the buffer as with the standard 4662. All program instruction, front panel settings, and hexidecimal switch settings remain unchanged for a given application.

If a 4662 has a serial number below B056305 it will require a level 7 plotter board, 670-4102-07, to be able to accomodate the extra memory chips. The customer must pay full purchase price for this new board, and Option 20. It is ordered thru the normal channel (CSG).

Factory Service will exchange a level 7 board with no less than another level 7 board. Although it is our policy to support only the highest level board if a lower level board is sent in for exchange there is no guarantee a level 7 will be the supplied exchange. Factory Service will not supply boards for those customers desiring Option 20. The Option 20, consisting of 12 RAM chips, should be removed from the plotter board prior to it being returned to Factory Service for repair, as the option itself is not set up in the exchange program.

In Summary

1. Customers wishing to have Option 20 in instruments below B056305, should be charged Time & Materials at catalog prices.
2. Level 7 boards sent to Exchange will come back as level 7 boards.
3. Level < 7 boards sent to Exchange will come back as level 7 boards if inventory is available, otherwise you will be put in a queue or the most compatible level board with the one you sent in will be returned to you.
4. Option 20 consists of 12 RAM chips on the customer's Plotter Board and should not be returned to Factory Service for repair. If it is suspected as being faulty replace the suspect RAM with a new RAM. If it is not suspected as being faulty and you are exchanging Plotter Boards remove these RAMs from the faulty board and place them on the board that will be used to replace it.

--Larry North
63/503, ext. 3926

4663 Y AXIS CABLE PULLEY ALIGNMENT

There is a 4663 modification that repositions the four (4) Y Axis Cable Pulleys located on the pen carriage to help prevent the cable from fraying. It replaces 4 screws and 12 washers with 4 longer screws (211-0104-00) and 2 plastic spacers (361-1052-00). Included with this article is a copy of the mechanical views with the affected hardware clearly identified. Install this modification only as required because NOT ALL 4663's experience fraying problems with their Y Axis Cable.

(continued on the following page)

--Larry North
63/503, ext. 3926

4663 Y AXIS CABLE PULLEY ALIGNMENT (CONTINUED)

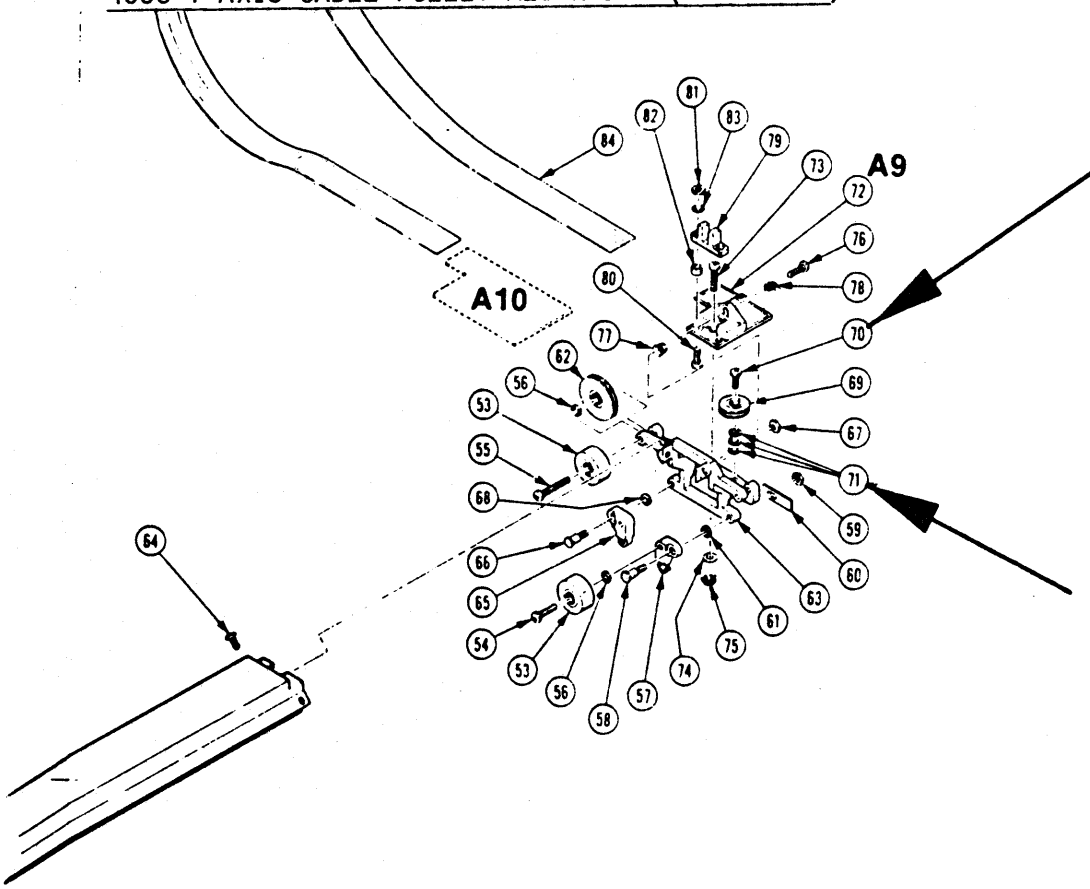

REMOVE: 211-0271-00
ADD: 211-0104-00
(5-40 X .375 Screw)

REMOVE: 210-0994-00
ADD 361-1052-00
(Spacer)

REMOVE: 211-0271-00
ADD : 211-0104-00

REMOVE: 210-0994-00
ADD: 361-1052-00

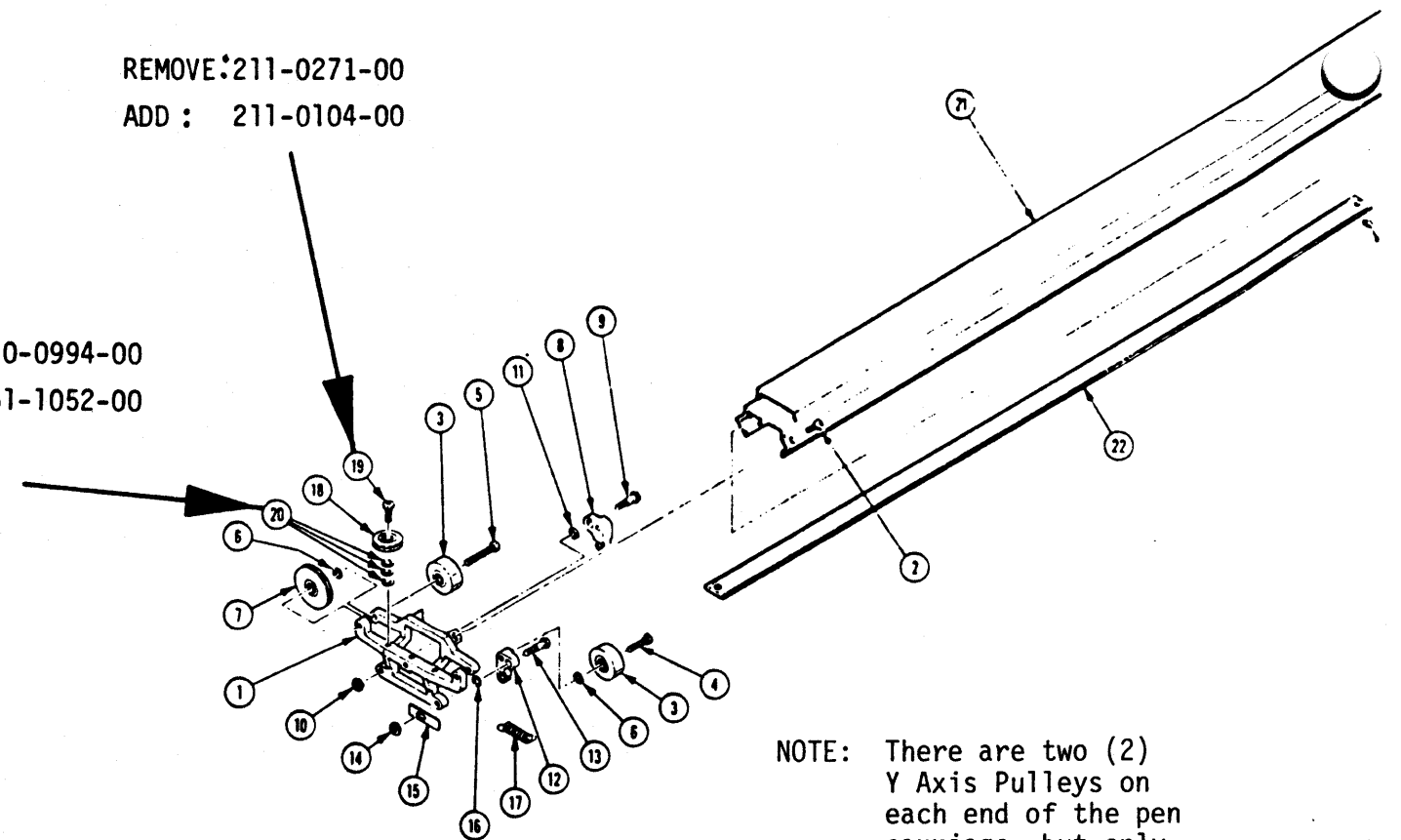

NOTE: There are two (2) Y Axis Pulleys on each end of the pen carriage, but only one of the two are drawn on this mechanical view.

May 30, 1980
Issue 10-11

4924 - U155 PART #156-0778-02 DEFECTIVE DATE CODE

Date code 7944 of Masked ROM p/n 156-0778-02 has been found to contain incorrect data at all addresses. This ROM is U155 on the 4924 Control Board. Purge 156-0778-02 IC's date coded 7944 from your stock, reorder as necessary.

-- Frank Lees
63-503, ext. 3929
Wilsonville

SOFTWARE CHANGES AND PROBLEMS SOLVED FOR AP010

The following list includes all S-3200 software version changes for accounting period 010.

Internal use only: If you have any questions or need software updates, please call.

--Craig Wasson
94-816, Ext. 1564

SOFTWARE CHANGES AND PROBLEMS SOLVED FOR AP010

Program Name	Hardware Supported	Old Version	New Version	Problem Description	Problem Solution or Changes
DDVM.RUN	S-3200	V02.11	V02.12	Ohms autorange always returns a zero.	Ohms range needs to start with a different value than the volts range.
CUSTOM.RUN	S-3200	V02.21	V02.22	More than 58 entries regardless of whether it was accepted by Custom, (entries are file names and bus addresses) would cause a program abort.	Each time an entry was made the SP is being corrupted. The SP is now advanced to keep it from getting corrupted. Also, the number of bus addresses is limited to 64. (The amount that fits in 1 disk block).
REDUCE.RUN	S-3200	V03.01	V03.02	While Reduce is loading programs or while Reduce is in control when running a batch stream, ^S is ignored.	The program load locks out both ^C and ^S because it has to finish to avoid a system crash. Before the routine turns control over to the program, it clears the ^S holding location. The routine now checks the holding location before clearing it.
REDUCE.RUN	S-3200	V03.01	V03.02	Reduce should close a lun before reassigning it, instead of after reassigning it, to avoid fragmenting disk space.	Fixing this problem is not deemed worthwhile due to the amount of effort and code required. Using the "close" statement before reassignment will give the same result.
REDUCE.RUN	S-3200	V03.01	V03.02	1) The system will crash whenever this sequence occurs: a) Stop a running program using ^S. b) Reassign one or more luns. c) Run a non-existant program (i.e. misspell "continue") d) Restart the original program using "continue".	1) When a ^S occurs a pointer (RESTRT) is updated to point to the next instruction. When Lun blocks are changed, a table of pointers is updated. RESTRT is not in this table, so RESTRT now points to an incorrect place. RESTRT now is part of the table.

Program Name	Hardware Supported	Old Version	New Version	Problem Description	Problem Solution or Changes
				2) The system will crash when this sequence occurs: a) Attempt to run a program and receive an "insufficient memory" error. b) Reassign luns to increase available memory. c) Restart the program using "continue".	2) Several pointers are incorrect when an "insuffiencient memory" error occurs. These pointers are used in restarting a program when "continue" is input. Reduce now reloads the program instead of using the incorrect pointers.
				3) Under the following conditions, Reduce will abort a program with an "insufficient memory" message even though available memory is adequate: a) Run a large program (one that is large enough to occupy a high percentage of available memory with minimum lun assignments). b) When the first program is finished, reassign one or more luns so that the available memory is less than the requirements of the large program. c) Run a second program that fits the available memory.	3) After the luns are reassigned Reduce attempts to return the previous program to memory to pass the old program arrays to the new program. Unfortunately, the new lun assignments use up some of the program space so the previous program no longer fits. Since arrays are at the beginning of the program, it does not matter that the entire program fits into memory, only that the arrays are loaded. Reduce now calculates how much room is available and loads that amount of the old program, assuming that there is enough memory for arrays. If there is not enough room for arrays there won't be enough for the new program if it uses the same arrays. By making this truncation of the previous program, Reduce can't tell if the new program will fit into memory. To fix this problem an additional calculation is made prior to the execution of the program which compares available memory to the size of the test program.

Program Name	Hardware Supported	Old Version	New Version	Problem Description	Problem Solution or Changes
LOG.RUN	S-3200	V03.01	V03.02	1) The log assignment switch /DIM did not work when the length was omitted.	2) A 32 bit unsigned integer divide was needed to calculate allowable pattern length. (Change to PATIO.FNC required).
				2) Log would not allow an entry greater than 32767 for length on the /DIM switch.	2) Numeric switch arguments are stored as 15 bit unsigned integers. If the sign bit is set, LOG interprets it as an asterisk (*). Therefore the only means of generating a pattern with more than 32767 rows is to not specify the pattern length. Log will calculate the numbers of rows to fit available space.
				3) Entering an illegal character after "=" in allocate causes Log to crash.	3) When an illegal character is entered, Log checks whether it is a CR. If CR is not entered an error message is printed.
REDUCE.RUN	S-3200	V03.01	V03.02	When entering a file name to the executive (S) and ^C is immediately input, unpredictable results occur. (i.e. program short).	Problem found: after control is released to Reduce (to run a .TST file) the Reduce startup routine can't be halted without a system crash. Cure: During the sensitive startup routine, ^C is locked out and then checked at the end of the routine.
PATIO.FNC	S-3200	V02.20	V02.21	PATOUT returns an EOF error when attempting to write a pattern file with more than 32767 rows.	PATOUT treated the number as a 15 bit signed integer. It now treats is as a 16 bit unsigned integer.
SEARCH.FNC	S-3200	V02.00	V02.01	The XING function corrupts IP if more than 201 valid crossings are requested.	After each found crossing a comparison is made between two numbers in the R4 stack by CMP (R4)+,(R4). For many crossings

SOFTWARE CHANGES AND PROBLEMS SOLVED FOR AP010 CONTINUED

Program Name	Hardware Supported	Old Version	New Version	Problem Description	Problem Solution or Changes
					the R4 stack will grow out of bounds and corrupt IP. The cure is to use a CMP (R4),2(R4) instruction.
SM2.FNC	S-3200	ID3	ID4	SM2 software for the "standard" configuration does not connect the MAT4 to SCOPETRIG path.	The SM2 paths connection table had invalid data for the MAT4 to SCOPETRIG connection. Correct date is in the latest release.
BARRAY.FNC	S-3200	V02.00	V02.01	A certain range of numbers will cause an "AC" error in the BARRAY subroutine even though the numbers are legal, (i.e. 500x96x1)	When multiplying the 3 dimensions together special consideration must be given if the sign bit is set in one of the partial results.

SOFTWARE ADDITION NOTICE SUMMARY FOR AP010

Program Name	Hardware Supported	Version No.	Program Description
ALTER.EDT	S-3280	448900	Test checks the force mask compare Mux on D80
AUXPWR.EDT	S-3280	428202	Checks out the 1140 #2 supplies
CHNTST.EDT	S-3280	448800	Tests the ability of the D80 sector cards to chain data through their register to another card.
CHPAT.PAT	S-3280	431100	Provides a pattern source for the CHNTST.EDT
COMPAR.EDT	S-3280	448100	D80 comparator S&H verification.
CAMASM.EDT	S-3280	428600	Assembles the EDT verdict configuration file and stores it in CONFIG.BIN
CYCLE.EDT	S-3280	447800	Checks the cycle time for the timing system
DCSUB.EDT	S-3280	428801	Checks the DCSUB system against a known 10 v ref
DELTAT.EDT	S-3280	449500	Verifies the operation of the DT measurement subsystem

SOFTWARE ADDITION NOTICE SUMMARY FOR AP010 CONTINUED

Program Name	Hardware Supported	Version No.	Program Description
TIC.EDT	S-3280	430601	Verifies operation of programmable clock card by comparing programmed times to software loops in processor.
TIS1.EDT	S-3280	447500	Test the 1140A current supply
TSTEND.EDT	S-3280	430802	Terminates the verdict run and prints the logged data
TSTSRT.EDT	S-3280	430902	Initialized the verdict variables, updates the card I.D. table, and starts the verdict run sequence
T1140A.EDT	S-3280	447400	Verifies voltage supplies VS1-VS4 for accuracy and VS3-VS4 for compliance current accuracy
VRNIER.EDT	S-3280	449100	Verifies the operation of the vernier delay of the D80 driver

SOFTWARE ADDITION NOTICE SUMMARY FOR AP010 CONTINUED

Program Name	Hardware Supported	Version No.	Program Description
DRIVMD.EDT	S-3280	449000	Tests the five different modes of the sector and driver.
DRIVSH.EDT	S-3280	447700	Driver sample/hold test
FICM.PAT	S-3280	456201	Pattern source for FICM4.EDT
FICM4.EDT	S-3280	448701	Four clock pulse mode functional test of D80 cards
FUNDMA.EDT	S-3280	448300	Functional test at DMA rate
FUNTBL.PAT	S-3280	431300	Pattern source for various verdict programs
FUN1M.EDT	S-3280	448500	Functional test at 1-MHz rate
FUN20M.EDT	S-3280	448600	Functional test at 20-MHz rate
GATSKW.EDT	S-3280	448400	Checks timing of compare gate phases in 1805
MATRIX.EDT	S-3280	447600	64:2 switching matrix test
OVRDRV.EDT	S-3280	449200	Verifies the operation of overdrive protection circuit to the D80 comparaters
PAP128.PIN	S-3280	431600	Verdict pinlist
PHASCK.EDT	S-3280	437401	Checks ability for each sector card to switch between initial phase and program phase
PHASE.EDT	S-3280	447900	Checks the phases going to the table for their specs
PLLMD2.EDT	S-3280	430101	Checks parallel chaining in two clock pulse mode
POWER.EDT	S-3280	430301	1804 power verification test
PRLCH1.EDT	S-3280	430201	Parallel chaining in single clock pulse mode
PRLCH1.PAT	S-3280	431400	Pattern file for verdict program
REEDS.EDT	S-3280	449600	Verifies the quality of the D80 reed-switch path
SAVDAT.EDT	S-3280	430501	Tests the various "SAVE DATA" functions of the D70 and D80 pin electronics cards
SHIFT.EDT	S-3280	436701	Tests shift registers
SHIFT.PAT	S-3280	436800	Verdict pattern
PRLCH2.PAT	S-3280	431500	Pattern file for verdict program

CP3200 (PDP11/34) INTERMITTENT LOADING OF PATTERN FILE

Symptom: When a 64K mos memory is used with the CP3200, intermittently the last line of a pattern file may not be loaded.

An 040 improvement kit is now available which calls for changes to the R1340 PDP 11 interface. The part number is 040-0949-00. It includes parts, instructions, and diagrams.

Circuit Operation:

$\overline{\text{SSYN}}$ was arriving so timed that nØ (the LSB input to the state latch) was just changing state when the clock gated the latch. The latch used will gate a narrow pulse out the NØ output which will momentarilyenable U67A causing a pulse on the "Decrement TCR" line. Then, when the next state clock arrives, the nØ input will be solid and the state will advance by setting NØ. This will produce the normal decrement command. In this one sequence two decrement commands were produced for one transfer and the TCR will reach zero one transfer early producing the sympton observed when using the PDP11/34 in conjunction with the 64K mos memory.

A D-flip-flop was placed in the buffer-inverter U12F. This is the entry point for SSYN from the unibus transceiver. Clocking it by the state clock produces a sampling effect for the next cycle and precludes the race condition by not allowing $\overline{\text{SSYN IN}}$ to enter the NM logic array except immediately following an update clock.

If the coincidence between nØ and the state clock can be prevented, the unwanted pulse will never occur. To accomplish this, $\overline{\text{SSYN}}$ must be controlled so it will never be recognized at a time immediately prior to the rising edge of the state clock.

Description of Change:

Front side of Circuit Board: Add Microcircuit 14 dip (156-0388-01) at U280. (U280 can accommodate a 16 dip Microcircuit, however a 14 dip Microcircuit is added thus leaving 2 holes unused).

Backside of Circuit Board: Add Wire 30 AWG (175-0929-00) from U280 pin 11 to U180 pin 3, from U280 pin 7 and 14 to legs of Capacitor 1.0uF 25V (283-0177-00), from U280 pin 9 through hole and U280 pin 12 to square pin socket. Cut run between square pin and through hole, plus placing sampling D-Flop in $\overline{\text{SSYN IN}}$ signal path to assure SSYN can only be recognized immediately following a state update clock. The above changes are on PDP 11 Interface Circuit Board, assembly 670-3263-02, subpart of 672-0705-00.

The changes will result in rolling the part numbers as follows: 672-0705-00 will become 672-0705-01 and 670-3263-02 will become 670-3263-03.

Submitted by--
Bryan Dinteman

Inserted by--
Jim Stubbs
94-816, Ext. 1287

May 30, 1980
Issue 10-11

DC SUB-SYSTEM SENSITIVITY TO INJECTED NOISE

Connection of an external DMM to FLOATING COMMON OF THE D.C. Sub-System increased the noise observed upon A/D conversion. This injected noise was greatest when the FLUKE 8400 DMM, with the LO input connected to FLOATING COMMON was used. Other DMM's (TEK 7D13, DATA PRECISION 2440) did not add as much noise as the FLUKE. This noise level did not change when the DMM HI input was disconnected, or when the DMM was turned off.

Upon further investigation, it became apparent that only the meter chassis ground needed to be connected, thereby implying that noise was being coupled from the power system ground. Increasing the distance from the 1804 ground to the DMM ground, by plugging the meter into various points (I.E. - rack, blower housing, etc.), increased the noise.

Adjusting R1296 in the HUM-BUCKING circuit had no effect on the observed noise when the A.C. signal on P810 K was adjusted from 1 volt to over 20 volts peak to peak.

This injected noise caused by the DMM's results in verdict failures when testing the 1140 voltage supplies in the 10 to 50 millivolt region. Be aware of this condition and for accurate verdict measurements remove the external DMM from the system.

Submitted by Chris Shirkoff.

Inserted by--
Jim Stubbs
94-816, Ext. 1287

7912AD FIRMWARE UPDATE

An Activity Code 18 Update for all 7912AD's is in progress. The update affects three boards in the instrument. All three must be upgraded at the same time. Boards affected are:

670-4946-00 which becomes 670-4946-01
670-4948-01 which becomes 670-4948-02
670-4953-00 which becomes 670-4953-01

A kit is required which contains new firmware for the first and last, and parts for the other with installation instructions. Order 046-0001-00 from Board Exchange only. All replaced firmware is to be returned as expeditiously as possible because there is a very limited supply in the float. You may expect some wait due to the limited supply and the turnaround time. All orders will be prioritized by Service Support and Marketing to ensure the best allocation of the float. Target date for completion is September 1, 1980. Generally, the priorities are:

1A Large Systems
1B When one of the older model boards is required to be exchanged and there is no exchange stock available.
1C Other systems in the USA
2A Instruments in the USA
3A Systems worldwide
3B Instruments worldwide

All instruments in a system must be done at the same time. It is therefore necessary to order in appropriate blocks that will cover a system because partials will not be shipped.

This modification, Corporate Mod #39091, is applicable to all 7912's prior to B05XXXX.

Failure to return replaced firmware in a reasonable length of time will result in the recipient being charged for the kit(s).

To overcome the reluctance of some customers to accept this upgrade, it should be pointed out to them that after the close date it will be very costly to them to replace an affected part.

--Dean Hager
94-816, Ext. 1284

MICHAEL A MIHALIK 92-515
COMB WIZARDS