Consultronics

R-O-R
Type 300 Audio Analyser
System

Service Manual

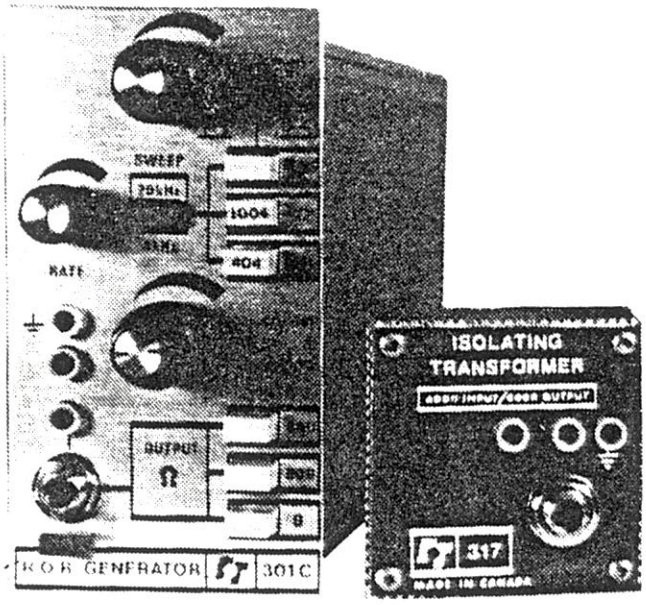

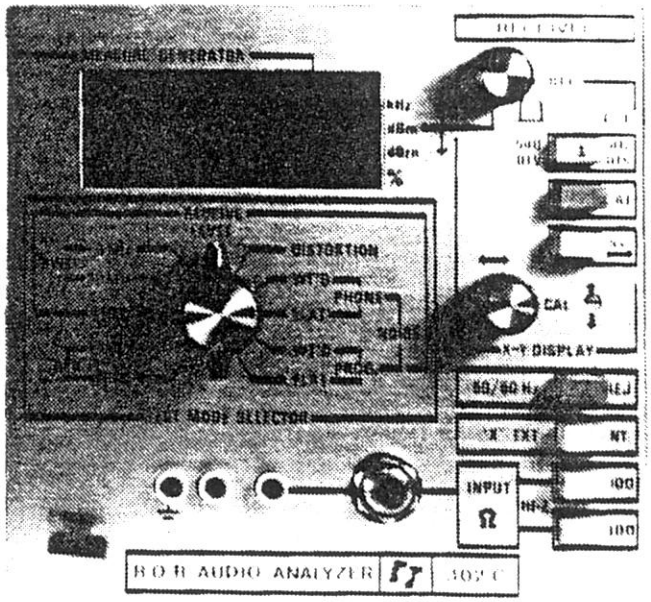

1.2.1 model 301 GENERATOR PLUG-IN

1.2.2 model 302 RECEIVER PLUG-IN

1.2.3 model 317 ISOLATING TRANSFORMER

Fig. 1.2 BASIC PLUG-IN UNITS for the R-O-R 300 SYSTEM

Operating Functions of the Basic 300 System

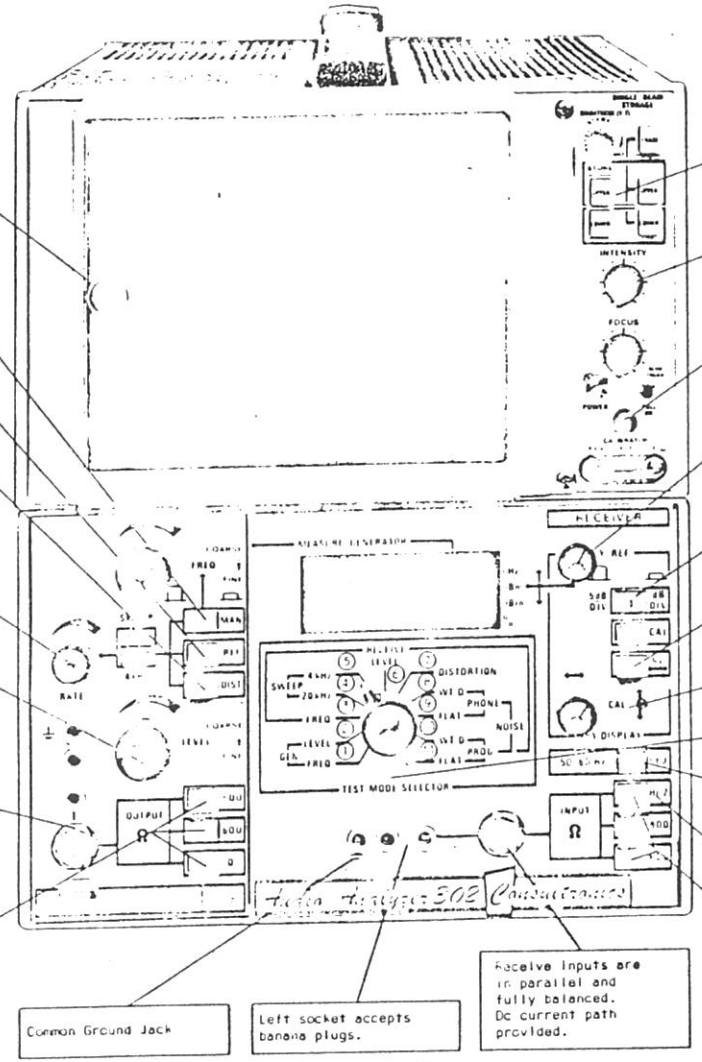

CALIBRATION POSITION
Press red CAL button and correct beam position.

Press MAN pushbutton for manual tuning of frequency. Read output frequency in position ① of Test Mode Selector.

Pushing the REF button will tune to 804 or 1004 Hz.

For distortion measurements use DIST pushbutton - generator will send special high purity test tone.

Release all three pushbuttons for automatic sweep of generator.

Select sweep rate from 2 sec/sweep to 100 sec/sweep.

Adjusts output level of generator between +18 and -40 dBm. Read output level in position ② of Test Mode Selector.

Transmit outputs are in parallel, balanced with grounded center. If connected to load where one side is grounded, output level is 3 dB lower than digital meter indication. Do NOT use both outputs at the same time (double termination!).

Select output impedance. 0 Ohm pushbutton permits the use of external resistor in series for output impedances other than offered.

Selects store/non store of CRT picture plus choice of upper and lower half screen storage and erase.

Adjust CRT picture, intensity setting approximately 1 o'clock.

Power Switch Pull = On
Push = Off

Shifts the displayed trace in the vertical direction. Use in order to center response trace on the CRT. Tied-in with ④ and ⑤.

Select amplitude scale on CRT (40 dB or 8 dB full scale).

Permits 5X expansion of any horizontal trace segment. Reposition trace ↔ for desired section.

Correct and calibrate trace position for left graticule circle on center line.

Hipass filter removes disturbing effects of 50 or 60 Hz mains frequency interference on level, noise or sweep measurements. Attenuation is >25 dB at 60 Hz, >0.2 dB at 300 Hz.

Bridging position > 50 K Ohms, with level meter reading voltage level 0 dB = 0.774 V.

Select input impedance.

The position of the TEST MODE SELECTOR switch determines what the instrument measures and indicates.

POSITION	FUNCTION
①	Digital readout shows send frequency (kHz), no trace on CRT.
②	Digital readout shows send level (dBm), no trace on CRT.
③	Digital readout shows frequency of received tone (kHz), trace display on 20 kHz log scale.
④	Trace display on 20 kHz log frequency scale, digital readout showing level of center line of CRT (dBm).
⑤	Trace display on 4 kHz linear frequency scale, digital readout showing level of center line on CRT (dBm).
⑥	Digital readout of received tone in dBm, trace display on 20 kHz log scale.
⑦	Digital readout of total distortion of one fixed test tone (404 Hz) in %.
⑧	Digital display of noise weighted with psophometric filter (CCITT White Book V, Rec. P53, 1968)
⑨	Digital display of noise (dBm) weighted with 3.5 kHz low pass filter.
⑩	Digital display of noise (dBm) weighted with Radio Program channel filter (new) CCITT Com.IV - No.76.
⑪	Digital display of noise (dBm) weighted with 20 kHz bandpass, IEC Publications 268-1 and 225.

Simultaneous display of any spurious tone on CRT, using 20 kHz log frequency scale.

300 System Audio Analyzers sold in North America contain the following noise filters:

⑧ Digital display of noise (dBm) weighted with C-message filter.

⑨ Digital display of noise (dBm) weighted with 3 kHz flat filter.

⑩ Digital display of noise (dBm) weighted with program channel filter.

⑪ Digital display of noise (dBm) weighted with 15 kHz flat filter.

(All filters in positions 8 to 11 comply with the Bell System Practices.)

600 Ω

1004

0 dB - 2 Vpp
3 dB - 2.80 Vpp
10 dB - 6.5 Vpp
15 dB - 12 Vpp
- 3 dB - 1.5
- 10 dB - .64
- 20 dB - .190
- 30 dB - 64 mV
- 40 dB - 20 mV

TECHNICAL SPECIFICATIONS & PERFORMANCE DATA

(Subject to Change Without Notice)

1.0 MODEL 301 AUDIO SWEEP GENERATOR PLUG-IN

Frequency range	40 Hz to 20 kHz min.
Frequency control	Manual or internal sweep
Preset frequencies	404 Hz (low distortion) & 1004 Hz
or	404 Hz (" ") & 804 Hz
Preset frequency tolerance at 25 °C	± 5 Hz
at 0 to 50° C	±10 Hz
long term drift	±10 Hz
Sweep rate	Adjustable from approx. 0.5 sec to 25 sec/decade.
Sweep range 1	40 Hz to 4 kHz min logarithmic
2	40 Hz to 20 kHz min "
Manual Frequency adjust	Coarse and fine control (fine control has approx. 2:1 range)
Output level	-40 dBm to +10 dBm minimum range. (+18 dBm available with increased distortion)
Output level adjust	Coarse and fine control (fine control has approx. 6 dB range)
Output waveform	Sinusoidal

Output distortion from -20 to +10 dBm:	at 25° C	at 0 to 50° C
40 Hz to 100 Hz	1% max	2% max
100 Hz to 1 kHz	0.3% max	0.6% max
1 kHz to 20 kHz	1% max	2% max
404 Hz preset	0.1% max	0.1% max

Level change from manual to preset	±0.1 dB max
Frequency response 0 to 50° C ref 1 k Hz:	
-30 to +10 dBm, 100 Hz to 10 kHz	±0.1 dB
" " , 40 Hz to 20 kHz	±0.25 dB
Output impedance at 1 kHz	600 ohm, balanced center gnd. Tolerance ± 1% 150 ohm, balanced center gnd. Tolerance ± 1% 0 ohm, balanced center gnd. Tolerance + 3 ohm.
Output connectors	WECO 310 & Siemens 3 pin

The model 301 Generator is designed to be plugged into a Tektronix 5111 oscilloscope mainframe.

TECHNICAL SPECIFICATIONS & PERFORMANCE DATA

(Subject to Change Without Notice)

MODEL 302 AUDIO ANALYZER PLUG-IN

Input Impedance ref. 1 kHz.	1.	150 ohm ±1% balanced.
	2.	600 " " "
	3.	100 kOhm "
Input holding current capability		70 mA DC max
Input overload protection		200 V 60 Hz AC 300 V DC 600 V 10 micro-sec. max
Input return loss		Over 30 dB to 6 kHz
Input connectors		Weco 310 & Siemens 3 pin
Audio monitor gain		+ 20 dB
Audio monitor output limit		+ 5 dBm
High-pass filter, switchable, Attenuation at 300 Hz		less than 0.5 dB
60 Hz		more than 25 dB

DIGITAL READOUT SPECIFICATIONS

Level measurements

Frequency range	40 Hz to 20 kHz
Level measuring range	-50 dBm to + 18 dBm minimum
Level readout resolution	0.1 dB

Level reading accuracy at 1 kHz (abs)	at 25° C	0 to 50° C
+ 15 to + 18 dBm	± 0.5 dB	± 0.6 dB
+ 10 to + 15 "	± 0.25 "	± 0.3 "
- 20 to + 10 "	± 0.1 "	± 0.15 "
-35 to -20 "	± 0.15 "	± 0.2 "
-42 to -35 "	± 0.2 "	± 0.5 "
-50 to -42 "	± 0.3 "	± 1 +

Level reading flatness Ref. 1 kHz, 25° C	40 Hz to 100 Hz	to 10 kHz	to 20 kHz
+15 to +18 dBm	-0.2 dB	± 0.1 dB	-1 dB
+10 to +15 "	" "	± 0.05 "	± 0.2 "
-20 to +10 "	" "	" "	± 0.1 "
-35 to -20 "	" "	± 0.1 "	± 0.15 "
-42 to -35 "	" "	"	± 0.3 "
-50 to -42 "	-0.5 "	± 0.2 "	± 1. "

FREQUENCY MEASUREMENT (Gen or Receive)

Frequency Range	10 Hz to 20.00 kHz min.
Level range (ext. tracking)	-50 to +18 dBm min.
Resolution	10 Hz
Accuracy	± 5 Hz
Level range (int. tracking)	-30 dBm to +18 dBm min.

CRT DISPLAY SPECIFICATIONS (using Tektronix 5111 oscilloscope)

HORIZONTAL

Range 1.	0 to 4 kHz, Linear
2.	40 Hz to 20 kHz, Logarithmic
Display accuracy at 25° C	± 1 mm 100 Hz to 10 kHz
0 to 50° C	± 2 mm " " "
Expansion range	approx. 5:1
"X" Shift Control range	40 Hz to 22 kHz
Display calibration	Single pushbutton checks X & Y axis position and scaling

VERTICAL

Sensitivity	1 & 5 dB/division or
opt:	0.5 & 5 dB/division
"Y" Reference control range	approx. -40 to +18 dBm
Resolution	0.05 dB
Display accuracy	± 3% of deflection
Display Calibration:	Single push-button checks X & Y axis position and scaling.

The model 302 is designed to plug into a Tektronix 5111 mainframe.

C I R C U I T D E S C R I P T I O N

MODEL 301 GENERATOR

Generator Board

8.0 The generator consists of a voltage controlled oscillator (VCO) which produces a saw-tooth and a square waveform, a sine converter, a log sweep generator, a bandpass filter and a power output stage.

1) The VCO comprises IC's 5, 6, 7, 8 and part of IC 9 as well as Q1. When IC 5 output is positive, C 4 is charging towards the negative supply. When this charge reaches the same voltage as the output of IC 8 at the junction of R 22 and D 7 the comparator (IC 7) changes its output polarity. This reverses the voltage on the output of IC 5 reversing the direction of the saw-tooth signal on C 4 and changing the reference voltage on IC 8 until the charge once again reaches this level and then the cycle begins again. The VCO drive voltage at the output of IC 4 determines the speed of charge hence the frequency. This drive voltage comes from fixed or variable sources according to the selection on the function switch.

8.1 The sine converter processes the saw-tooth wave by performing the mathematical equivalent of the series expansion formula for a sine wave. IC 11, 12, 14, 15 and 16 convert the saw-tooth into a series of half sine waves. IC 17 and the second half of IC 9 invert every second half cycle to produce a proper sine wave.

8.2 The log sweep generator comprising IC 1, 2 and 3 is a self oscillating circuit, whose linear change of charge is converted by diode D 2 into a log -1 rate of change at the output of IC 2 which drives the VCO in the sweep position.

8.3 The bandpass filter (IC 18, 19 and 20) is tuned to 400 Hz. It provides a highly purified sinewave output for harmonic distortion measurements.

8.4 The power output stage of IC 21, 22, 23, 24 and 25 perform conversion of the single ended input signal to a balanced output level corrected for the selected impedance.

MODEL 302 AUDIO ANALYZER

8.0 "X" BOARD

The terminated signal enters the receiver through a differential input stage consisting of IC 1, 2 and 3. From here the signal is split to further amplitude (V) processing by IC 6 and "X" decoding. This decoding is performed by converting the sinusoidal signal of varying amplitude to a square-wave signal of fixed amplitude by IC 4 and 5. This drives a one-shot comprising Q 1 and IC 13 whose output is integrated by IC 8 or IC 9 to a DC level proportional to input frequency. IC 10, 11 and 14 convert this linear output to a logarithmic drive which drives the CRT "X" deflection through IC 12. The presence or absence of a +15V level on LIN DRIVE determines if IC 12 follows the linear or logarithmic drive.

8.1 NOTCH BOARD

The notch board consists of a bank-reject filter and circuitry to selftune this filter to any frequency between 360 to 440 Hz and adjust the notch depth for maximum rejection. IC's 1, 2 and 3 form a inverting bandpass filter whose output cancels the out of phase fundamental frequency of the input tone in IC 5, leaving only the harmonics and noise IC 4 and Q 2 integrates tuning errors to drive the frequency adjusting photo coupler IC9. IC 6 and Q 1 integrates amplitude errors to drive the gain adjusting photo coupler IC 8. IC 7 is a semi-conducting 4 pole switch whose function is to select the proper signal for further processing.

8.2 FILTER BOARD

The filter board consists of a 40 dB gain stage, four active filters and a solid state 4 pole switch to select the desired output. IC 1 and 2 provide the 40 dB gain as well as the positive DC offset required by IC 12. The 3 kHz flat filter uses IC 3 and is shared by the "C" message filter comprising IC 3, 6, 8 and 10. The 15 kHz flat filter uses IC 5. IC 4, 7, 9 and 11 form the program channel filter.

8.3 "Y" BOARD

The "Y" board contains circuitry to rectify and filter the "Y" signal, take the logarithm of the result, calculate percentage distortion and electronically switch the proper output for driving the digital display. The "Y" board also contains the power supply regulators for all the boards in the Model 301 Receiver. IC 1 amplifies the AC signal to improve rectifier response IC 2 and 3 form a full wave rectifier circuit (average detector). After filtering the signal is applied to the log converter IC 4 and 14e. IC 7 and 14d supplies the reference 0 dB level. IC 5 amplifies the resulting level to IV/10 dB. IC 6 adds or subtracts the "Y" reference level from the dB signal level enabling the user to center the trace on the oscilloscope screen. When the trace is centered the "Y" reference voltage is equal to the signal level. This simplifies measuring of harmonic distortion as the signal is first "zeroed" with "Y" reference and then rejected by the notch filter. The ratio of the remaining harmonics to the stable "V" reference voltage is calculated by IC 8, 9 and 14c at IV/10%. IC 10, 11, 12 and 13 perform electronic switching. Only one of IC 10, 11 or 12 is allowed to amplify its input at one time. The others receive a positive input bias current reverse biasing their respective output coupling diodes. IC 10, 11 and 12 needed a positive offset and a voltage division by 2 to perform their function. IC 13 cancels the offset and re-amplifies the signal to the original level. Q 1 and D 20 regulate the positive supply to +14.5V. Q 2 and D 21 regulate the negative supply to -14.5V. D 19 is a temperature compensated zener diode which together with IC 15 and 16 produce a precision +1.00V and -1.00V supply.

8.4 THE COUNTER BOARD

The counter board performs the function of analog to digital conversion, frequency counting and display driving.

IC 10 and 11 convert the incoming DC signal to its absolute value. If the input is positive Q 5 turns on and through IC's 8 d, 3 d and 5 prevent the display of a negative sign. The negative sign drive is taken from

the most significant digit (MSD) drive. IC 12 and IC 13 converts the DC input into a pulse train whose frequency is proportional to the input voltage. This pulse train or one of the frequency inputs can be selected by IC 3 and IC 9 to go to IC 4. IC 4 is a counter, seven segment display driver/scanner. The scanning frequency is generated with the aid of C 5. The counting interval of IC 4 is controlled by IC 1 which generates a 1.0 Hz. square wave from the division of a 1 MHz. crystal oscillator on the same chip. IC 2 further divides the 10 Hz. to 5 Hz., driving two one shots, one from the leading and one from the trailing edge of the square wave. The seven segment and digit drive outputs are amplified by IC's 5, 6 and 7 which drive the display digits from a +5V source.

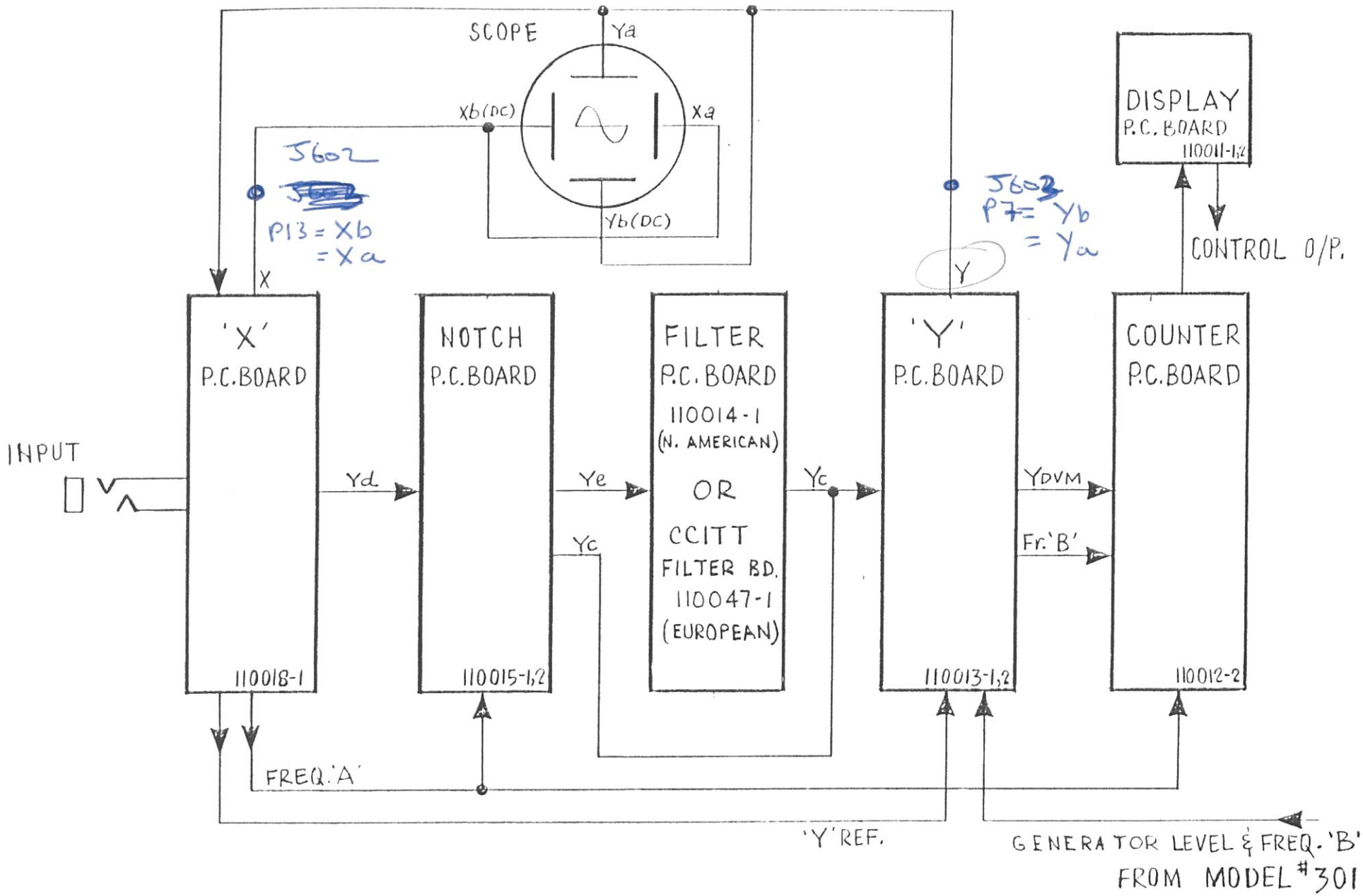

CONSULTRONICS LTD. TORONTO, CANADA	BLOCK SCHEMATIC AUDIO ANALYZER (MODEL #302)	DR'N BY LR	SCALE —	
		CH'D BY J.R.	DWG. No. 100021-1B	
	MAT'L / No. REQ'D / CLASS	DATE MAR 7, 1974		

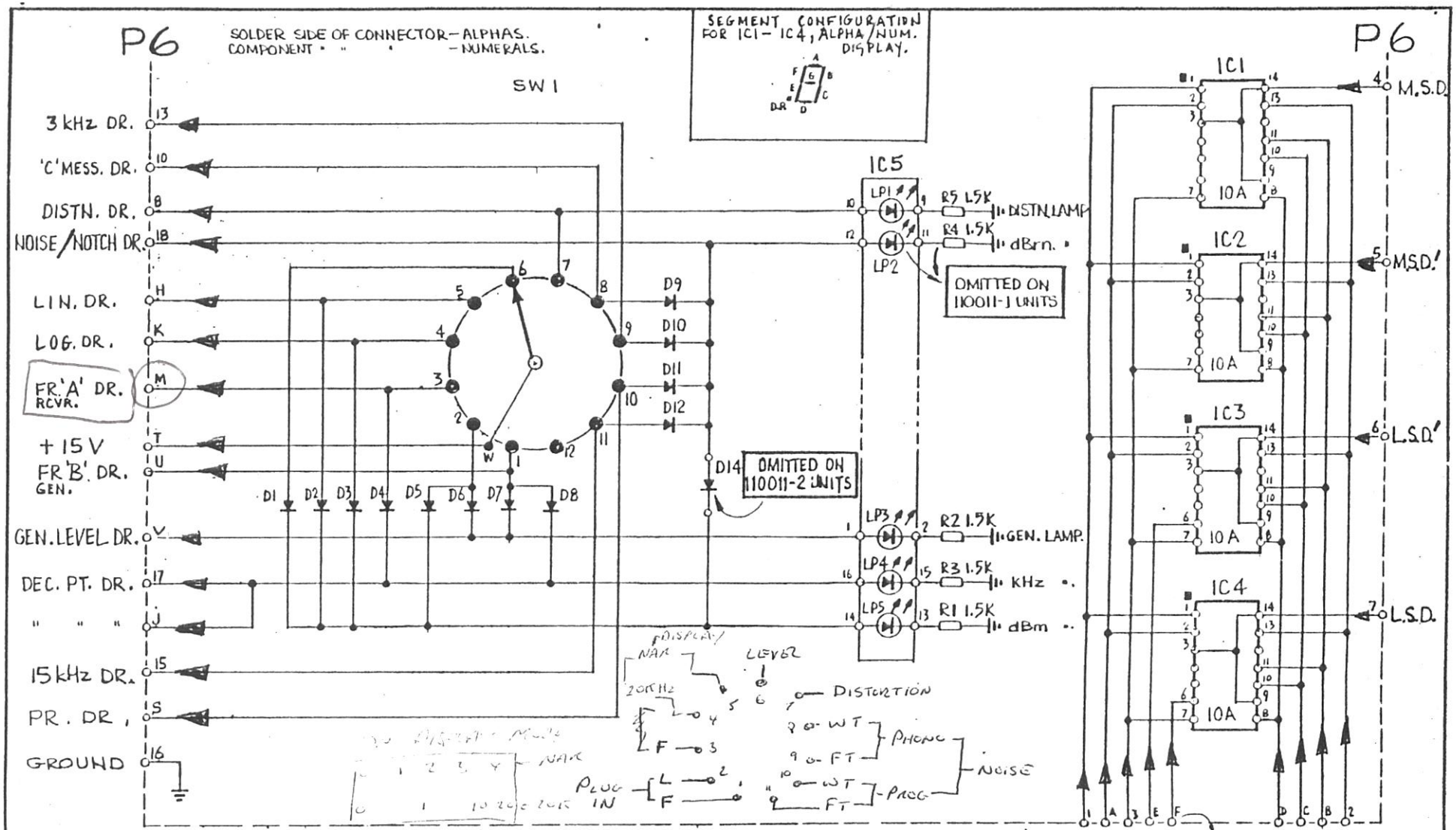

NOTES:- 1. D1 – D15 ARE 1N914; LP1 – LP5 ARE HP 5082-4487; IC1 – IC4 ARE DATA-LIT 10A OR EQUIV.
2. ALL RESISTANCE VALUES IN OHM.
3. ALL RESISTORS ARE ¼W, 5%.

CONSULTRONICS LTD. TORONTO, CANADA	DISPLAY P.C.B. – SCHEMATIC MODEL # 302	DRN BY / CH'D BY	SCALE —
	MAT'L 400020-1 P.C.B. / NO. REQ'D / CLASS E/APR 77	DATE MAR 1, 1974	DWG. NO. 110011-1S-2S

TRANSTEX 15 10M-6-73

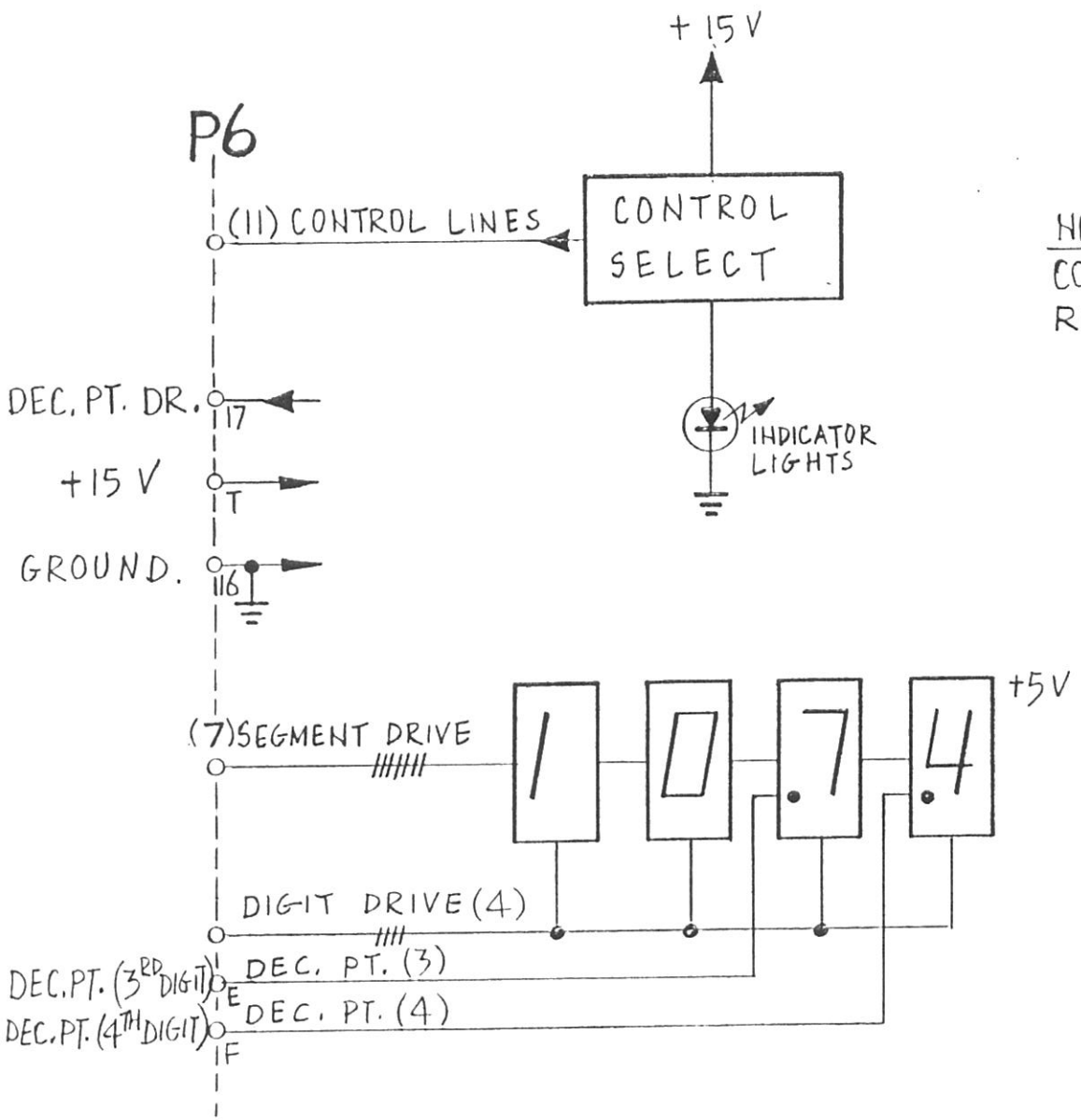

NOTE:- FOR PIN ALLOCATION OF ALL CONTROL LINES, SEGMENT & DIGIT DRIVES REFER TO SCHEMATIC, DWG. NO 110011-1S

CONSULTRONICS LTD. TORONTO, CANADA.	DISPLAY P.C.B. — BLOCK SCHEMATIC MODEL #302			DR'N BY LR	SCALE —
				CH'D BY A.R.	DWG. No. 110011-1B
	MAT'L	No. REQ'D	CLASS	DATE JAN 31, 1974	

TRANSTEX 15 10M-9-73

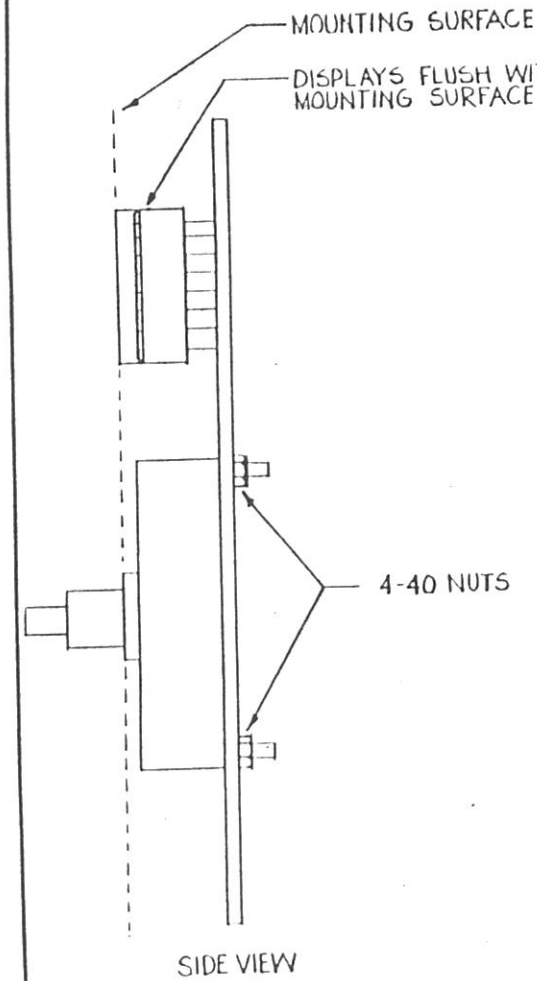

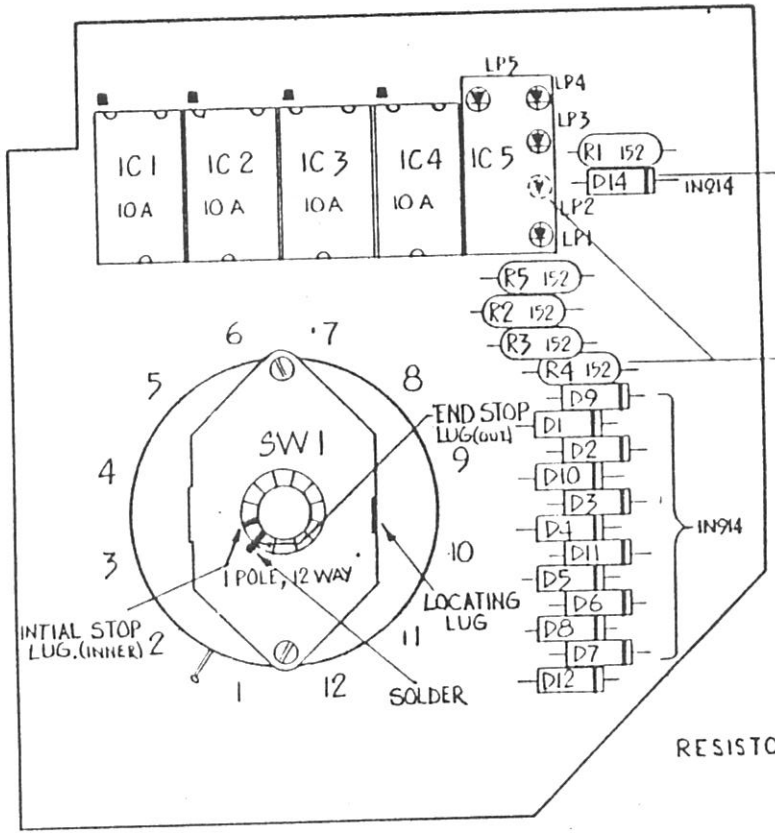

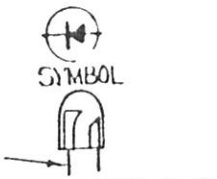

RESISTOR VALUES INDICATE COLOUR CODE EQUIV.

NOTE :-

1. SOLDER OUTER STOP LUG TO SWITCH PLATE TO RETAIN POSITION.

CONSULTRONICS LTD. TORONTO, CANADA.	DISPLAY P.C.B. SUB ASSY. MODEL #302	DR'N BY RR	SCALE 2:1
	MATL P.C.B. 400020-1 / NO. REQ'D / CLASS E/APR 77	CH'D BY	DWG. NO. 110011-R2
		DATE APRIL 17, 1975	

① - INT LEVEL & FREQ DISPLAYS
- TRACED TO IC8 & 9 FAULTY
CD 4011
② - SUGGEST DECOUPLING CAPS C8

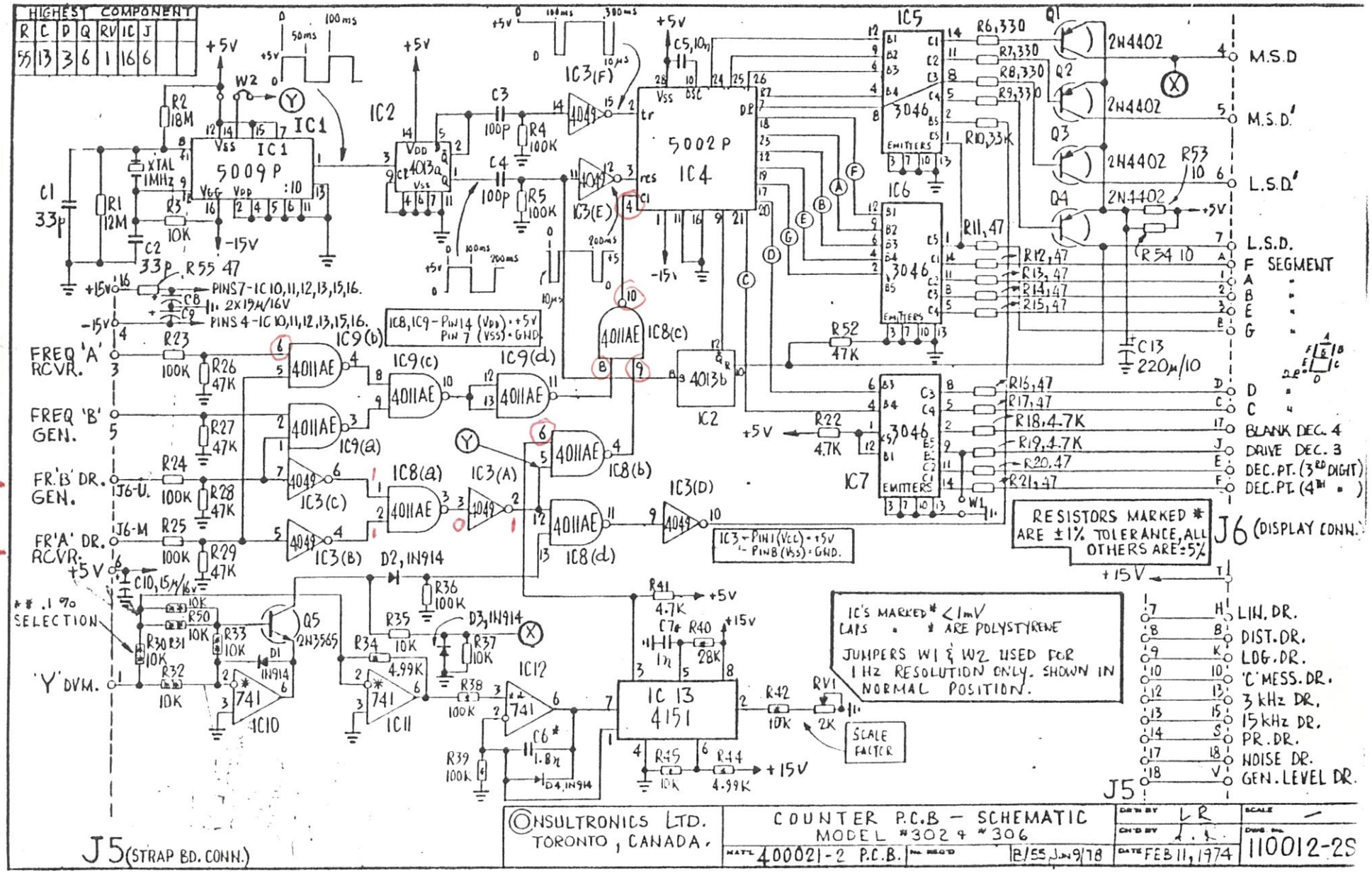

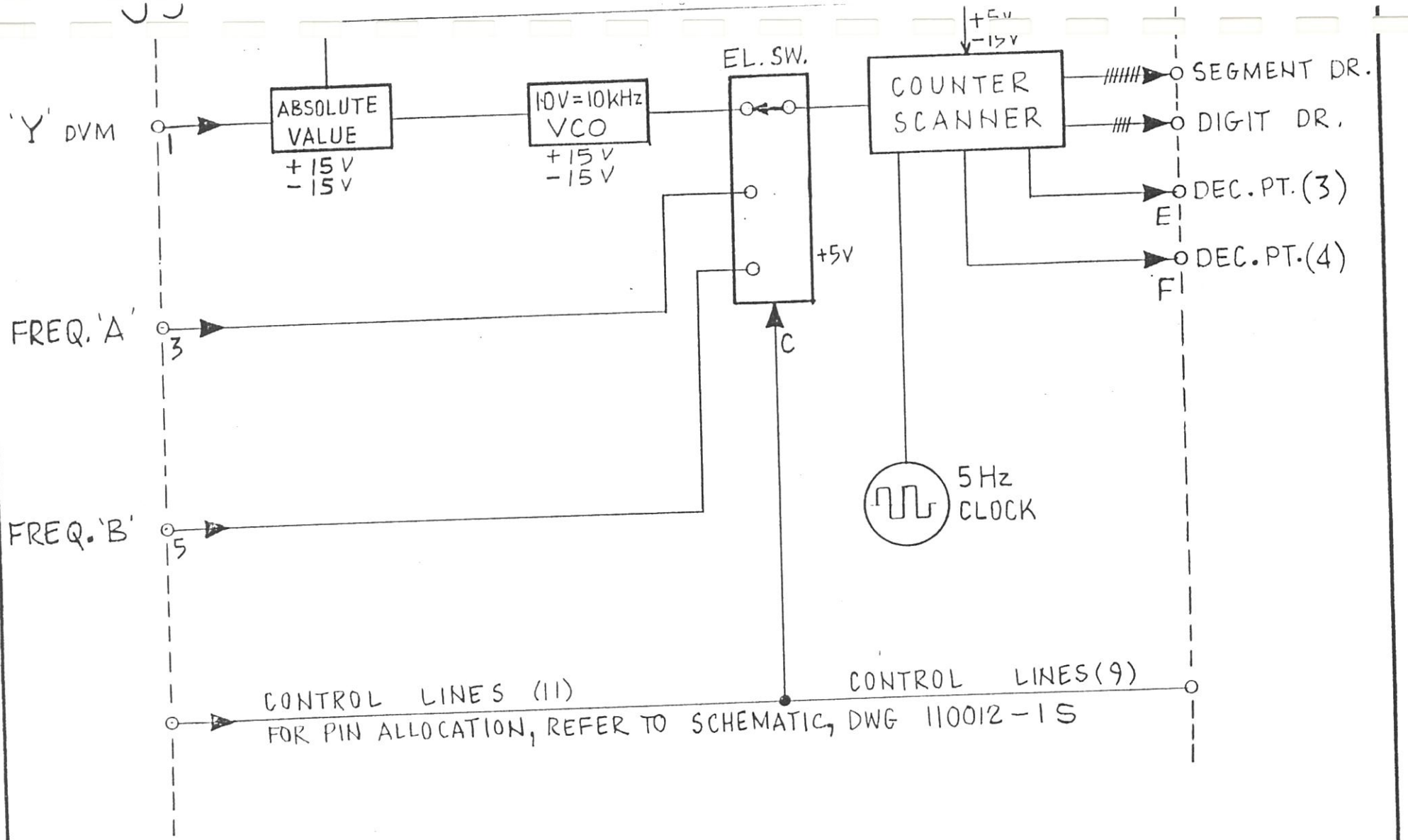

CONSULTRONICS LTD. TORONTO, CANADA.	COUNTER P.C.B. – BLOCK SCHEMATIC MODEL # 302 & 306	DR'N BY L.R.	SCALE —	
		CH'D BY J.R.	DWG. No. 110012-1B	
	MAT'L / No. REQ'D / CLASS	DATE JAN 31, 1974		

TRANSTEX 15 10M-9-73

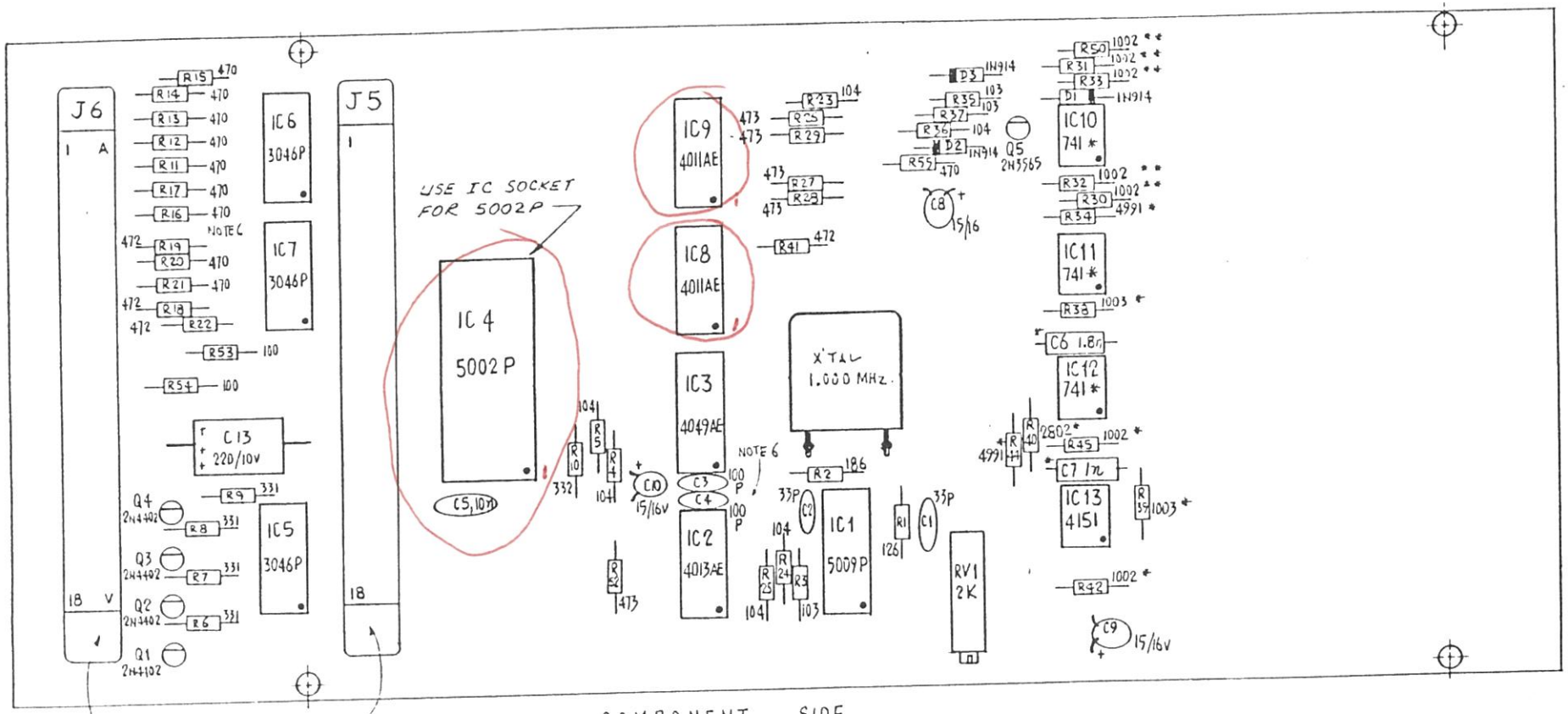

COMPONENT SIDE

CUT PINS ON J5 & J6 TO APPROX. 1/16" HIGH OFF P.C.B.

NOTE:-

1. IC's 10,11,12 ARE SELECTED * < 1mV OFFSET.
2.
3. RESISTORS MARKED * ARE ± 1% TOL.
4. " " ** " SELECTED ± 0.1% TOL.
5. CAPACITORS MARKED * (C6,7) ARE POLYSTYRENE.
6. JUMPERS W1 & W2 USED FOR 1 Hz RESOLUTION ONLY.
7. X'TAL TO BE LAID ON P.C.B. AS SHOWN AND PINS SOLDERED TO PADS AS SHOWN. USE DOUBLE FACED TAPE TO HOLD DOWN ON PCB.
8. RESISTOR VALUES INDICATE COLOR CODE EQUIVALENT.

REV	DESCRIPTION	DATE
A	NO ARTWORK CHANGE PROD. IMPROVEMENT CHANGES	LR MAR 13

CONSULTRONICS LTD TORONTO, CANADA.	COUNTER P.C.B. S/ASSY; SYSTEM 300, (302 & 306)	DRN BY LR — SCALE 2:1
	MATL PCB 400021-2 — REQD — A/43 MAR 14, 78	CH'D BY — DWG NO. 110012-2
		DATE NOV. 23, 77

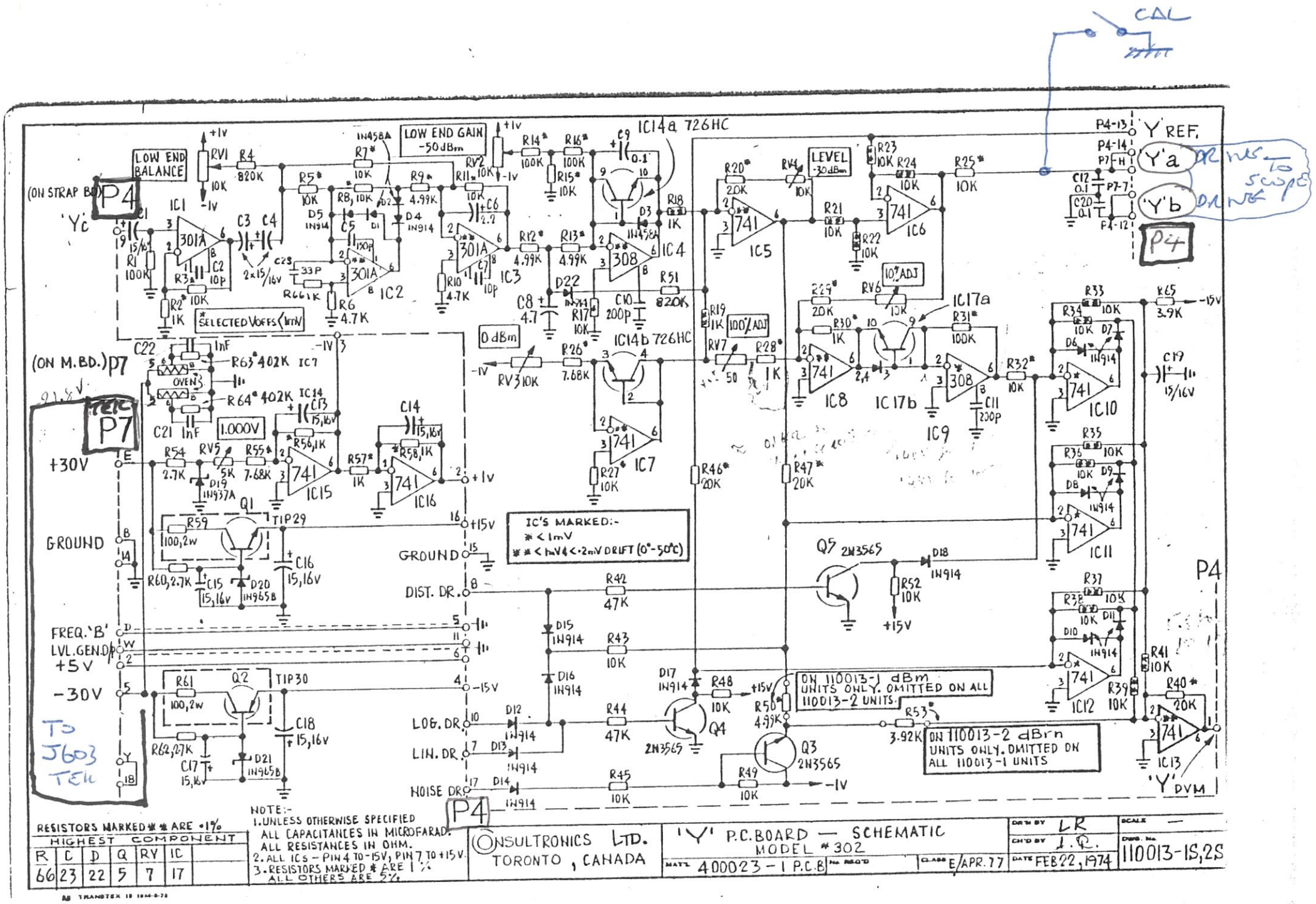
CAL
LOW END BALANCE
RV1 10K
R4 820K
LOW END GAIN -50dBm
RV2 10K
R14* 100K
R16* 100K
R15* 10K
IC14a 726HC
IC14b 726HC
LEVEL -30dBm
RV4 10K
R23 10K
R24 10K
R25* 10K
P4-13 'Y' REF.
P4-14
'Y'a
'Y'b
P4
(ON STRAP BD) P4
'Y'c
IC1 301A
IC2 301A
IC3 301A
IC4 308
IC5 741
IC6 741
IC7 741
IC8 741
IC9 308
IC10 741
IC11 741
IC12 741
IC13 741
IC14 741
IC15 741
IC16 741
IC17a
IC17b
R1 100K
R2* 1K
R3* 10K
R4 820K
R5* 10K
R6 4.7K
R7* 10K
R8 10K
R9* 4.99K
R10 4.7K
R11* 10K
R12* 4.99K
R13* 4.99K
R17 10K
R18 1K
R19 1K
R20* 20K
R21 10K
R22 10K
R26* 7.68K
R27* 10K
R28* 1K
R29* 20K
R30* 1K
R31* 100K
R32* 10K
R33 10K
R34 10K
R35 10K
R36 10K
R37 10K
R38 10K
R39 10K
R40* 20K
R41 10K
R42 47K
R43 10K
R44 47K
R45 10K
R46* 20K
R47* 20K
R48 10K
R49 10K
R50 4.99K
R51 820K
R52 10K
R53* 3.92K
R54 2.7K
R55* 7.68K
R56 1K
R57* 1K
R58 1K
R59 100,2W
R60 2.7K
R61 100,2W
R62 2.7K
R63* 402K
R64* 402K
R65 3.9K
RV3 10K
RV5 5K
RV6 10K
RV7 50
C1 15/16
C2 10P
C3 C4 2x15/16V
C5 150P
C6 2.2
C7 10P
C8 4.7
C9 0.1
C10 200P
C11 200P
C12 0.1
C13 15,16V
C14 15,16V
C15 15,16V
C16 15,16V
C17 15,16V
C18 15,16V
C19 15/16V
C20 0.1
C21 1nF
C22 1nF
C23 33P
R66 1K
D1 D2 D3 D4 D5 1N914
D6 D7 D8 D9 D10 D11 1N914
D12 D13 D14 D15 D16 1N914
D17 1N914
D18 1N914
D19 1N937A
D20 1N965B
D21 1N965B
Q1 TIP29
Q2 TIP30
Q3 2N3565
Q4 2N3565
Q5 2N3565
1.000V
SELECTED VOFFS (1mV)
0 dBm
100% ADJ
10% ADJ
OVEN
(ON M.BD.) P7
P7
+30V
GROUND
FREQ. 'B'
LVL. GEN. D/P
+5V
-30V
To J603 TEK
GROUND
DIST. DR.
LOG. DR.
LIN. DR.
NOISE DR.
+1V
-1V
+15V
-15V
IC'S MARKED:-
* < 1mV
** < 1mV & < ·2mV DRIFT (0°-50°C)
ON 110013-1 dBm UNITS ONLY. OMITTED ON ALL 110013-2 UNITS.
ON 110013-2 dBm UNITS ONLY. OMITTED ON ALL 110013-1 UNITS
'Y' DVM
P4
NOTE:-
1. UNLESS OTHERWISE SPECIFIED ALL CAPACITANCES IN MICROFARAD. ALL RESISTANCES IN OHM.
2. ALL ICS – PIN 4 TO -15V, PIN 7 TO +15V.
3. RESISTORS MARKED * ARE 1% ALL OTHERS ARE 5%
RESISTORS MARKED ** ARE ·1%
HIGHEST COMPONENT
R 66 C 23 D 22 Q 5 RV 7 IC 17
CONSULTRONICS LTD. TORONTO, CANADA
'Y' P.C.BOARD — SCHEMATIC MODEL #302
MATL 400023-1 P.C.B
CLASS E/APR.77
DATE FEB 22, 1974
DRW BY LR
CH'D BY J.R.
SCALE —
DWG. No. 110013-1S,2S

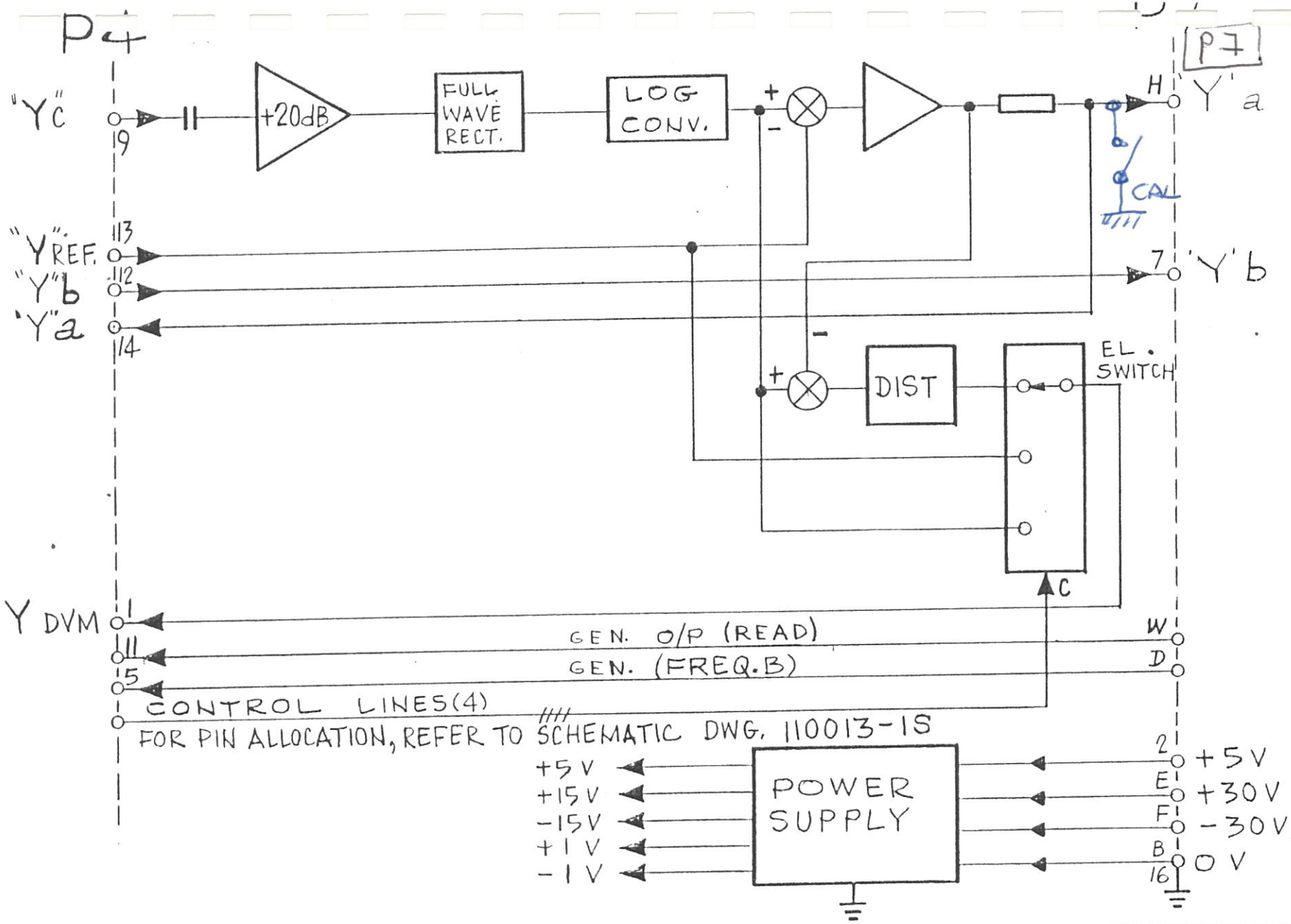

CONSULTRONICS LTD. TORONTO, CANADA	"Y" P.C.B. – BLOCK SCHEMATIC MODEL #302	DR'N BY LR	SCALE —
		CH'D BY L.R.	DWG. No. 110013-1B
	MAT'L / No. REQ'D / CLASS	DATE JAN 31, 1974	

TRANSTEX 15 10M-9-73

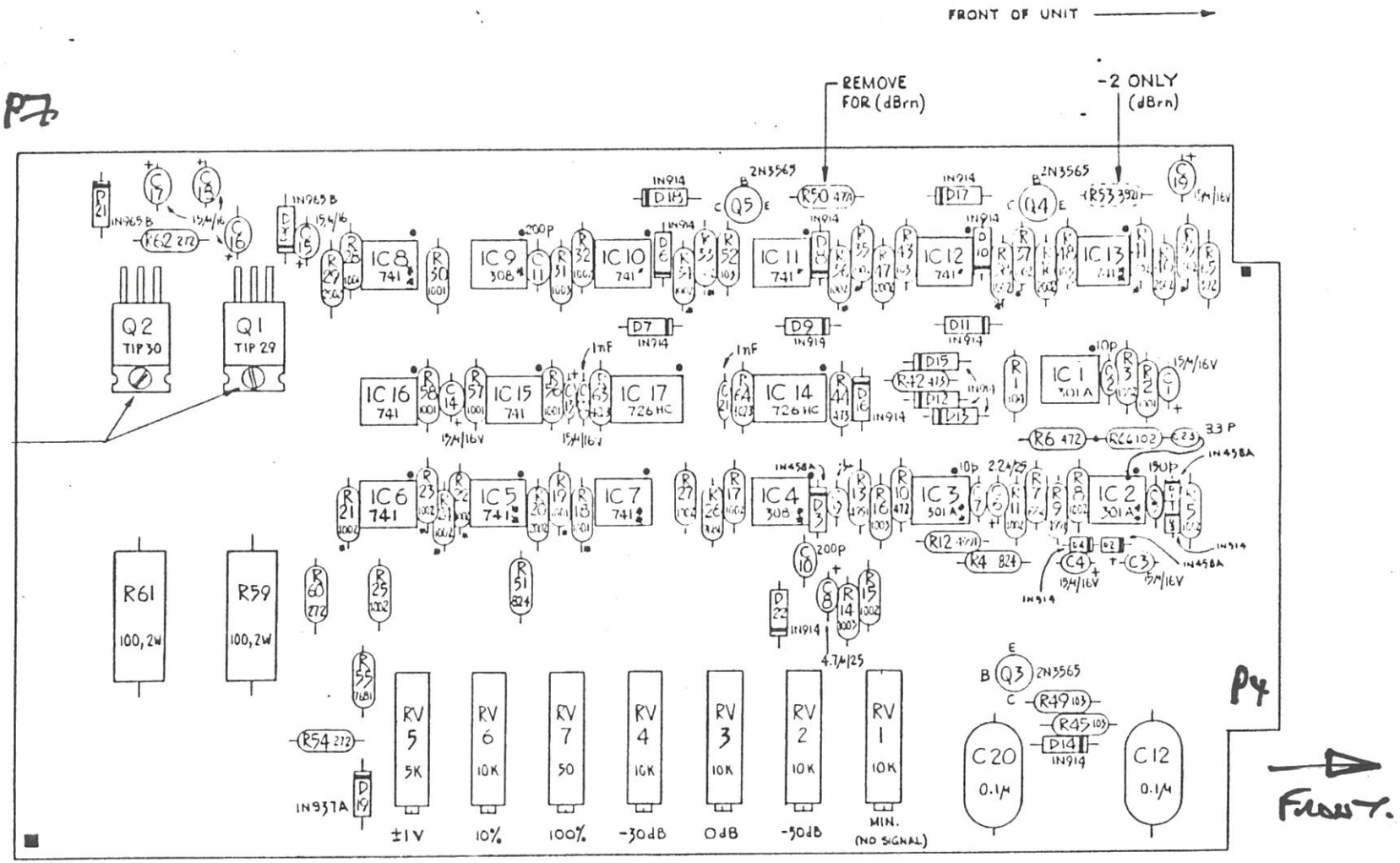
FRONT OF UNIT
REMOVE FOR (dBrn)
-2 ONLY (dBrn)
P7
P4
FRONT.
USE No 6-32 × 1/4 SCREW AND No 6 NUT.
TEIC
Q2 TIP 30
Q1 TIP 29
IC 8 741
IC 9 308
IC 10 741
IC 11 741
IC 12 741
IC 13 741
IC 16 741
IC 15 741
IC 17 726 HC
IC 14 726 HC
IC 1 301 A
IC 6 741
IC 5 741
IC 7 741
IC 4 308
IC 3 301 A
IC 2 301 A
R61 100, 2W
R59 100, 2W
RV 5 5K ±1V
RV 6 10K 10%
RV 7 50 100%
RV 4 10K -30dB
RV 3 10K 0dB
RV 2 10K -50dB
RV 1 10K MIN. (NO SIGNAL)
C20 0.1μ
C12 0.1μ
Q5 2N3565
Q4 2N3565
Q3 2N3565
IN914
IN937A
IN458A
IN963B
RESISTOR VALUES INDICATE COLOUR CODE EQUIV.
COAT SURROUNDINGS OF IC 2,3,4,7,8,14,17 ON BOTH SIDES OF P.C.B WITH SILICON RESIN, TECH SPRAY #1645-65 OR EQUIVALENT.
IC'S 2,3,4,5,7,10,11,12 & 13 ARE SELECTED, * < 1mV, ** < 1mV & < 0·2mV DRIFT (0°-50°)
RESISTORS MARKED * ARE ·1% SELECTED TYPE
CONSULTRONICS LTD. TORONTO, CANADA
'Y' P.C.B. SUB. ASSY. MODEL # 302
MAT'L 400023-1
CLASS E/APR 77
DRAWN BY RR
DATE APR 23 1975
SCALE 2:1
DWG NO. 110013-1

HIGHEST COMPONENT			
R	C	D	IC
39	23	4	12

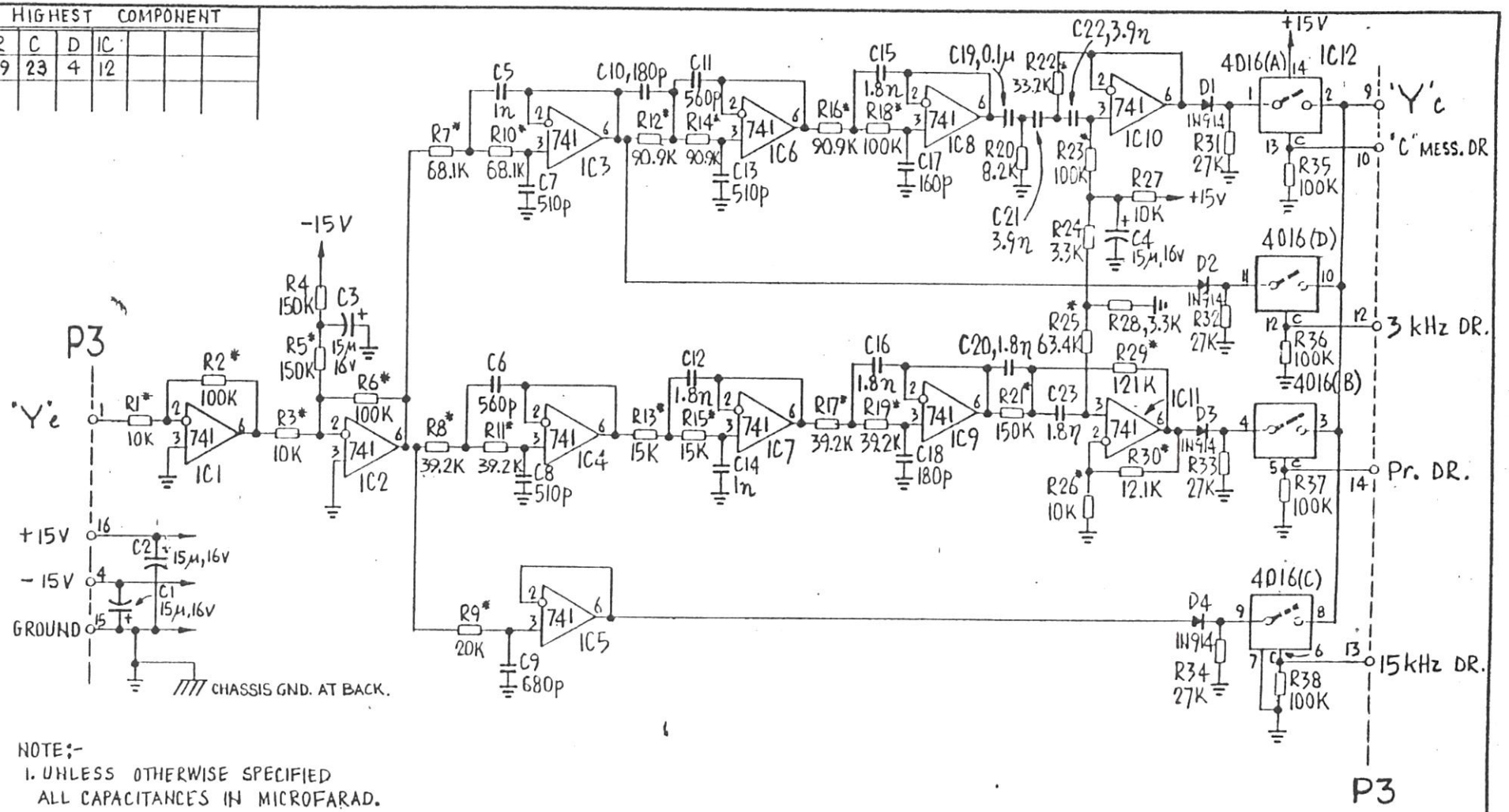

NOTE:-
1. UNLESS OTHERWISE SPECIFIED
ALL CAPACITANCES IN MICROFARAD.
ALL RESISTANCES IN OHM.
2. IC1 – IC11, PIN 4 TO -15V; PIN 7 TO +15V.
3. RESISTORS MARKED * ARE 1%
ALL OTHERS ARE 5%.

CONSULTRONICS LTD. TORONTO, CANADA	FILTER P.C.B – SCHEMATIC MODEL #302	DR'N BY LR / CH'D BY L.R.	SCALE —
	MATL 400025-1 P.C.B / No. REQ'D / CLASS C/MAY.75	DATE FEB 15, 1974	DWG. No. 110014-1S

TRANSTEX 18 10M-6-73

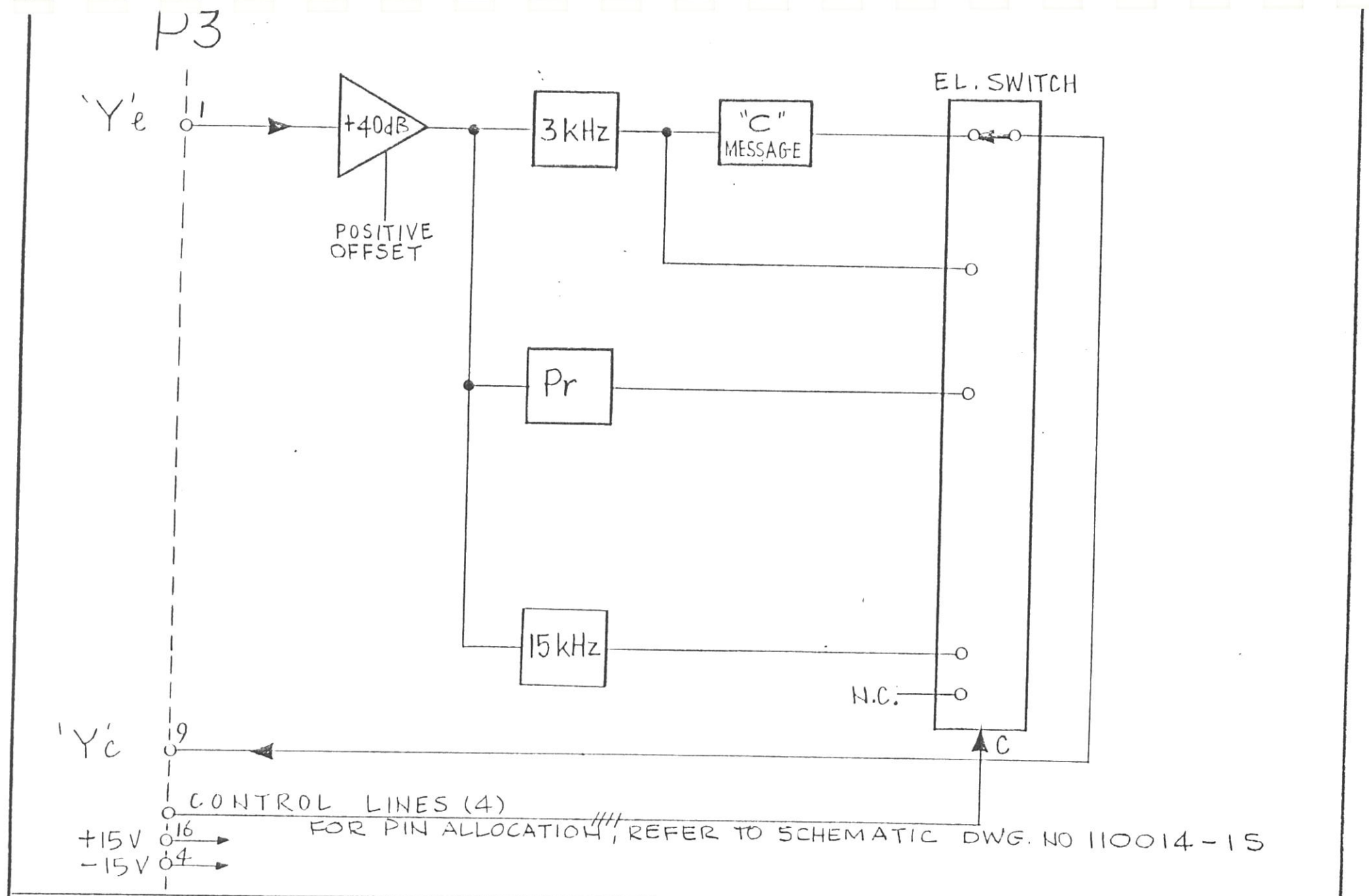

CONSULTRONICS LTD. TORONTO, CANADA	FILTER P.C.B. — BLOCK SCHEMATIC MODEL #302	DR'N BY LR	SCALE —
		CH'D BY L.R.	DWG. No. 110014-1B
	MAT'L / No. REQ'D / CLASS	DATE JAN 31, 1974	

TRANSTEX 15 10M-9-73

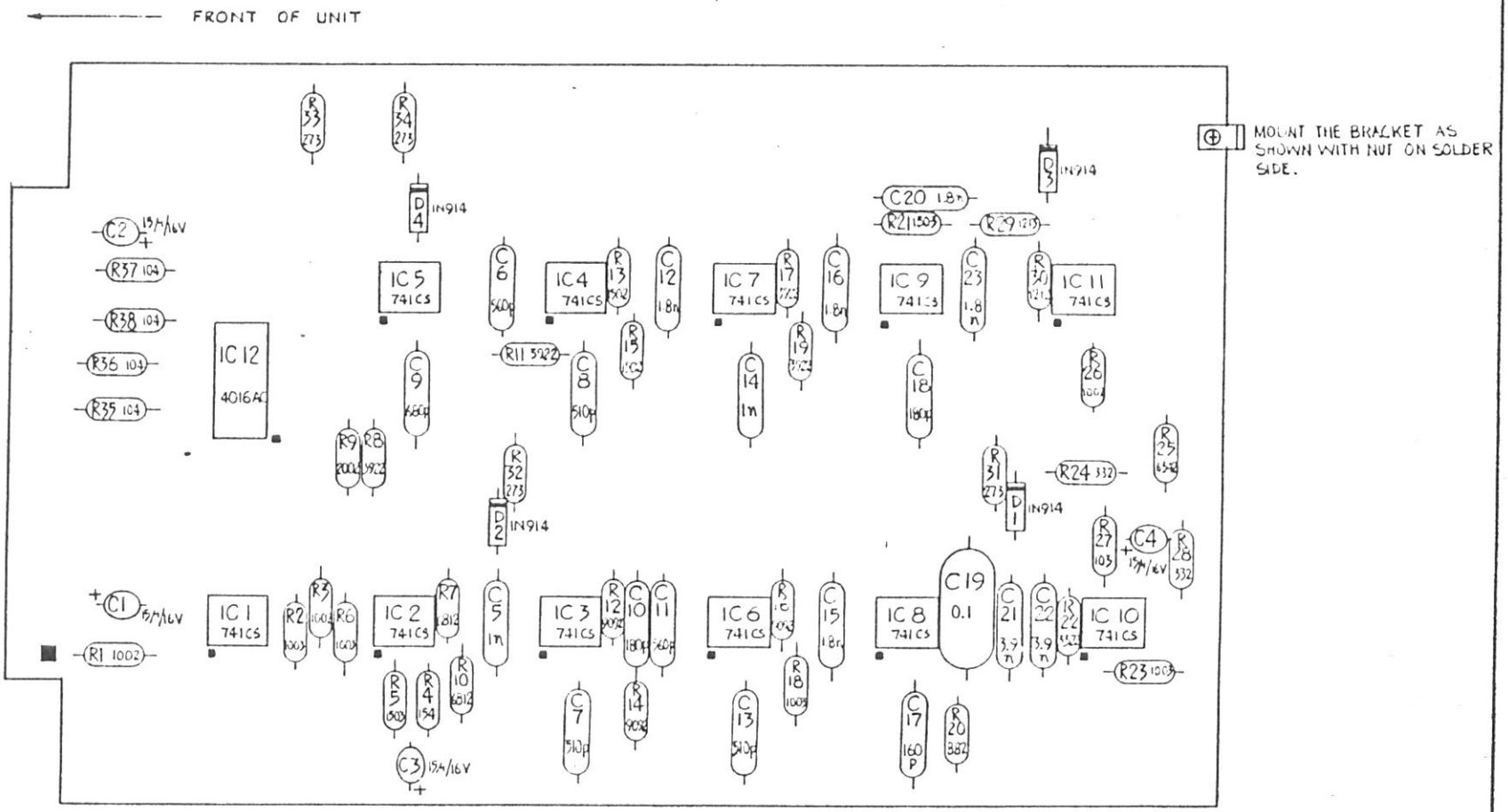

RESISTOR VALUES INDICATE COLOUR CODE EQUIV.

ONSULTRONICS LTD. TORONTO, CANADA.	FILTER BOARD P.C.B. ASSY. MODEL #302	DR'N BY RR	SCALE 2:1
		CH'D BY	DWG. NO. 110014-1
	MATL 400025-1	DATE APR. 21. 1975	

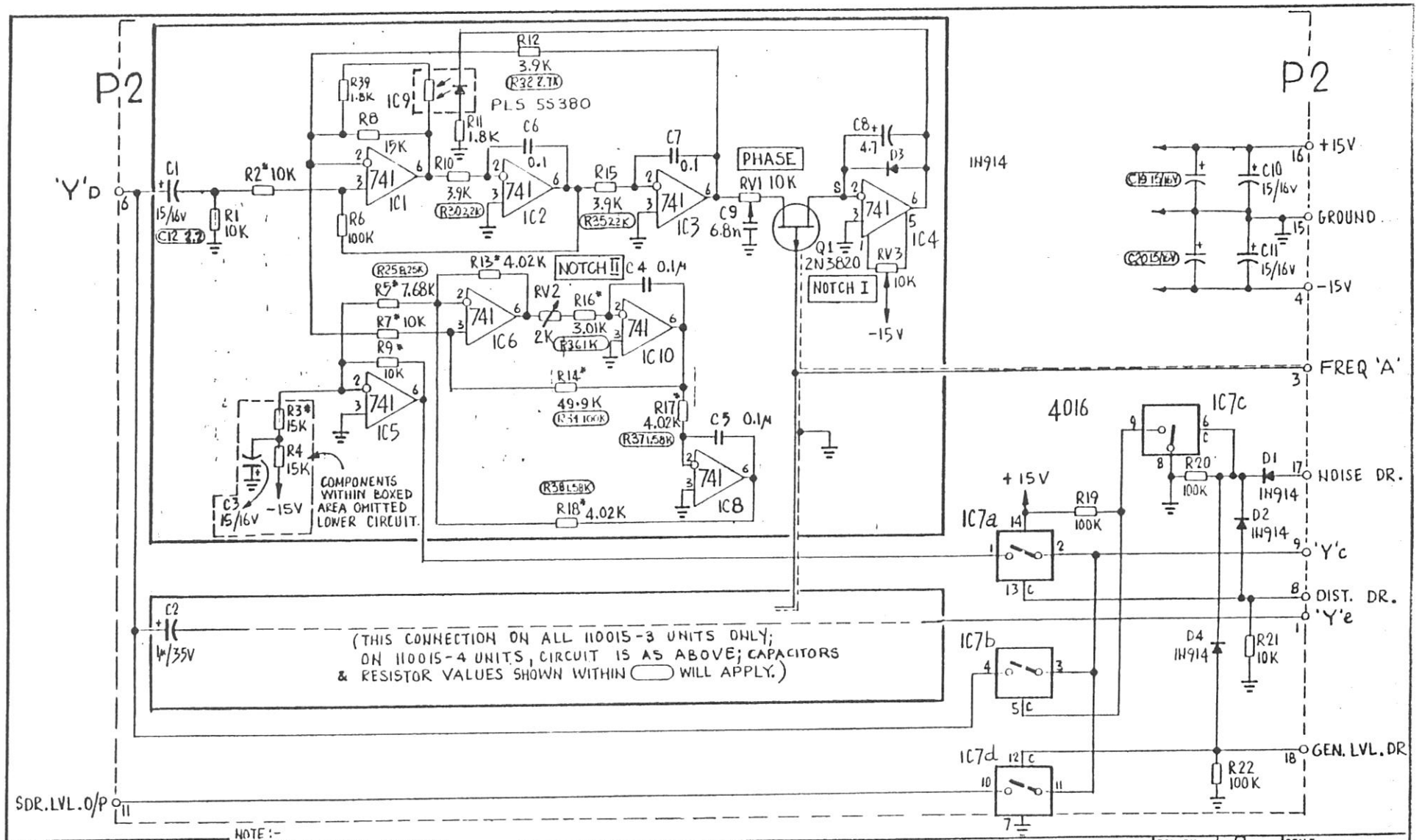

HIGHEST COMPONENT					
R	C	D	Q	RV	IC
39	13	4	1	3	10

NOTE:-
1. UNLESS OTHERWISE SPECIFIED ALL CAPACITANCES IN MICROFARAD, ALL RESISTANCES IN OHM.
2. IC'S 1 TO 6, PIN 4 TO -15V; PIN 7 TO +15V.
3. RESISTORS MARKED * ARE 1%; ALL OTHERS 5%

CONSULTRONICS LTD.
TORONTO, CANADA

NOTCH P.C.BOARD — SCHEMATIC
MODEL #302

MAT'L 400027-1 P.C.B. | No. REQ'D | CLASS E/20 JAN 24, 78

DR'N BY LR | CH'D BY | DATE MAR 4, 1974 | SCALE — | DWG. No. 110015-3S,-4S

TRANSTEX 18 10M-8-73

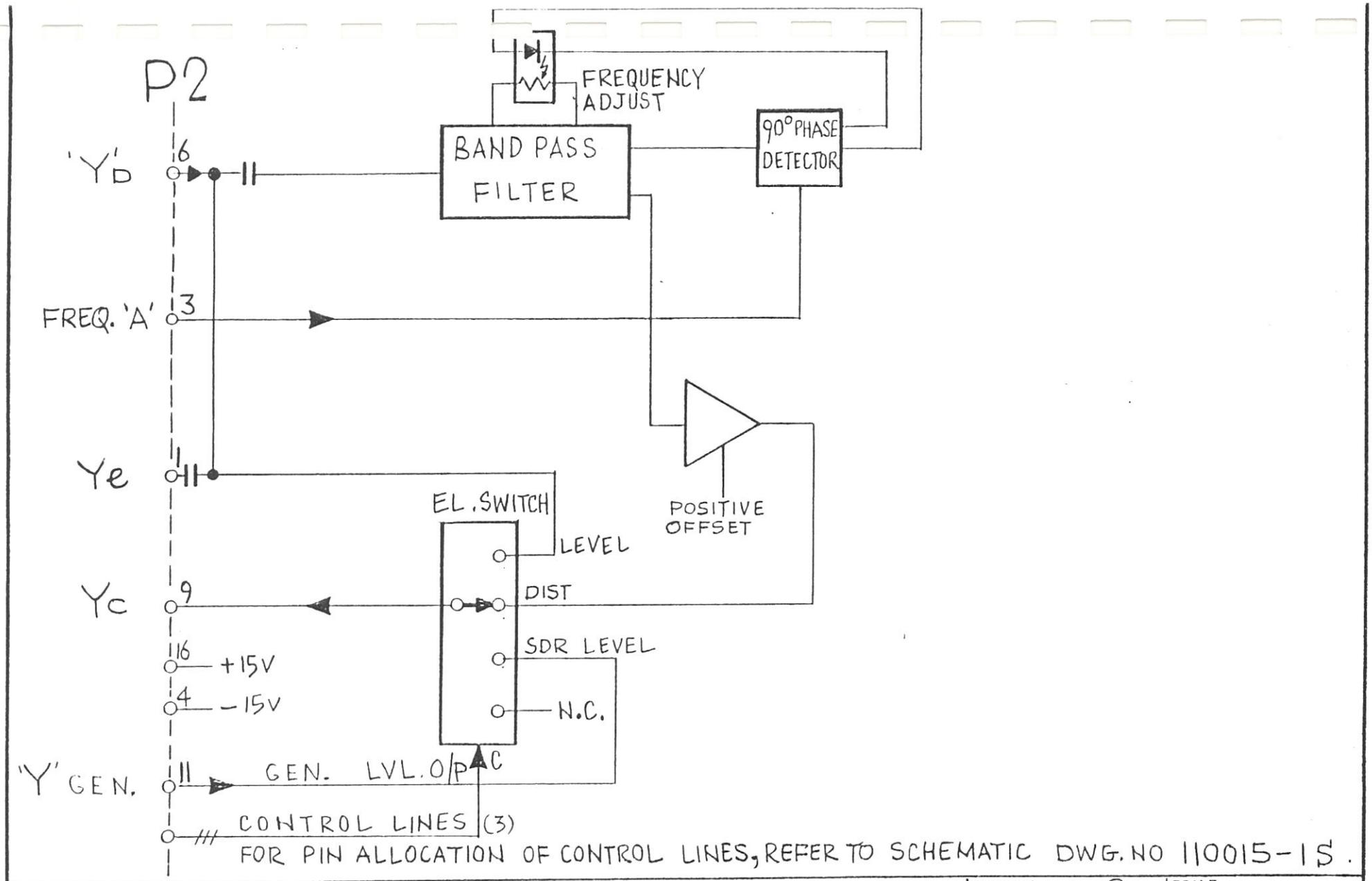

FOR PIN ALLOCATION OF CONTROL LINES, REFER TO SCHEMATIC DWG. NO 110015-1S.

CONSULTRONICS LTD TORONTO CANADA	NOTCH P.C.B. — BLOCK SCHEMATIC MODEL #302			DR'N BY LR	SCALE —
				CH'D BY L.R.	DWG. No. 110015-1B
	MAT'L	No. REQ'D	CLASS	DATE FEB 1, 1974	

TRANSTEX 15 10M-9-73

DISTORTION NOTCH

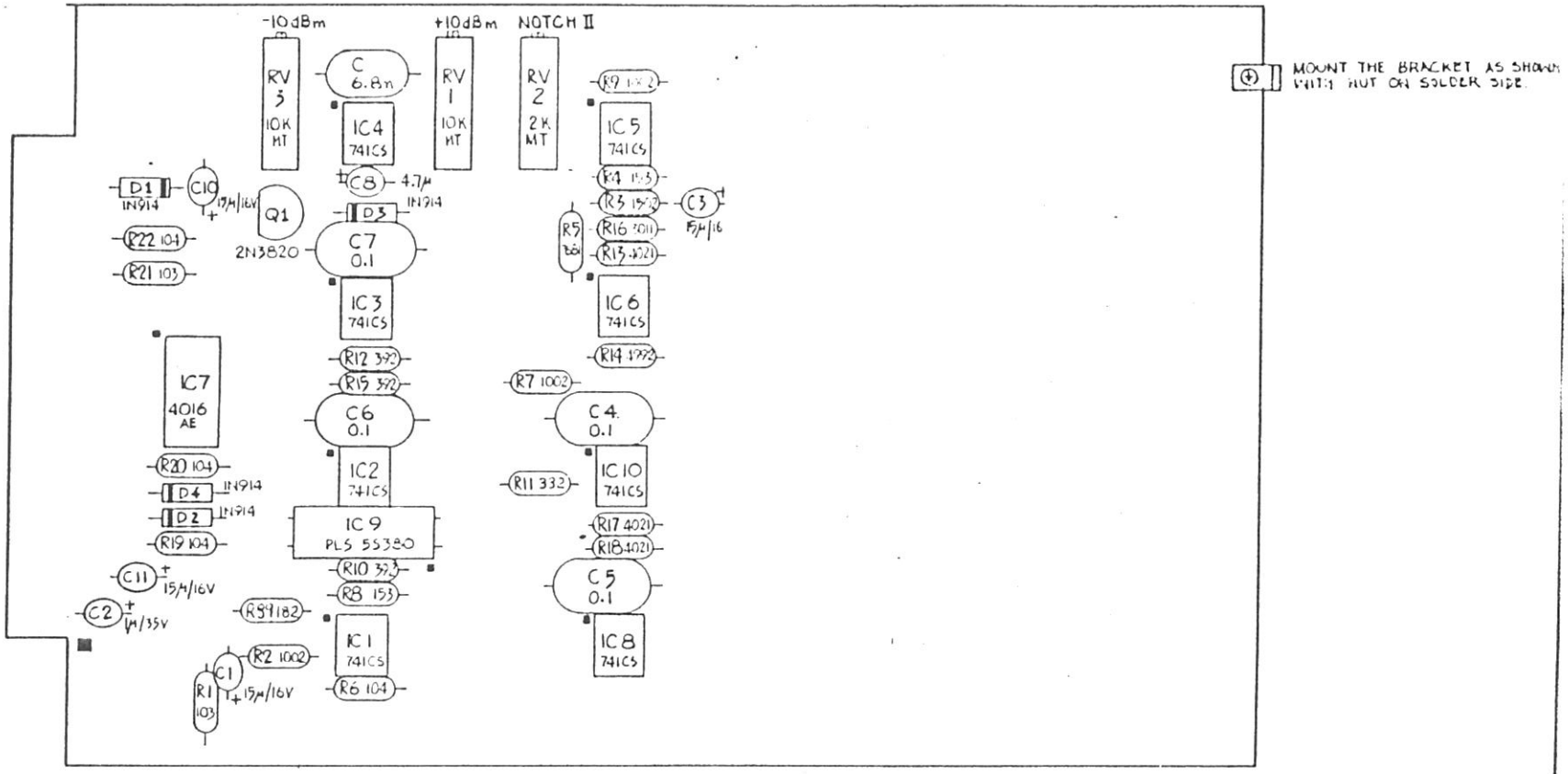

FRONT OF UNIT

COMPONENT SIDE

RESISTOR VALUES INDICATE COLOUR CODE EQUIV.

CONSULTRONICS LTD. TORONTO, CANADA.	NOTCH BOARD — P.C.B. ASSY. MODEL #302	DRAWN BY P.T. / CHK'D BY J.R.	SCALE 2:1
	MAT'L 400027-1 / TM REQ'D / CLASS E/ECC/77	DATE APRIL 16, 1975	DWG. NO. 110015-3

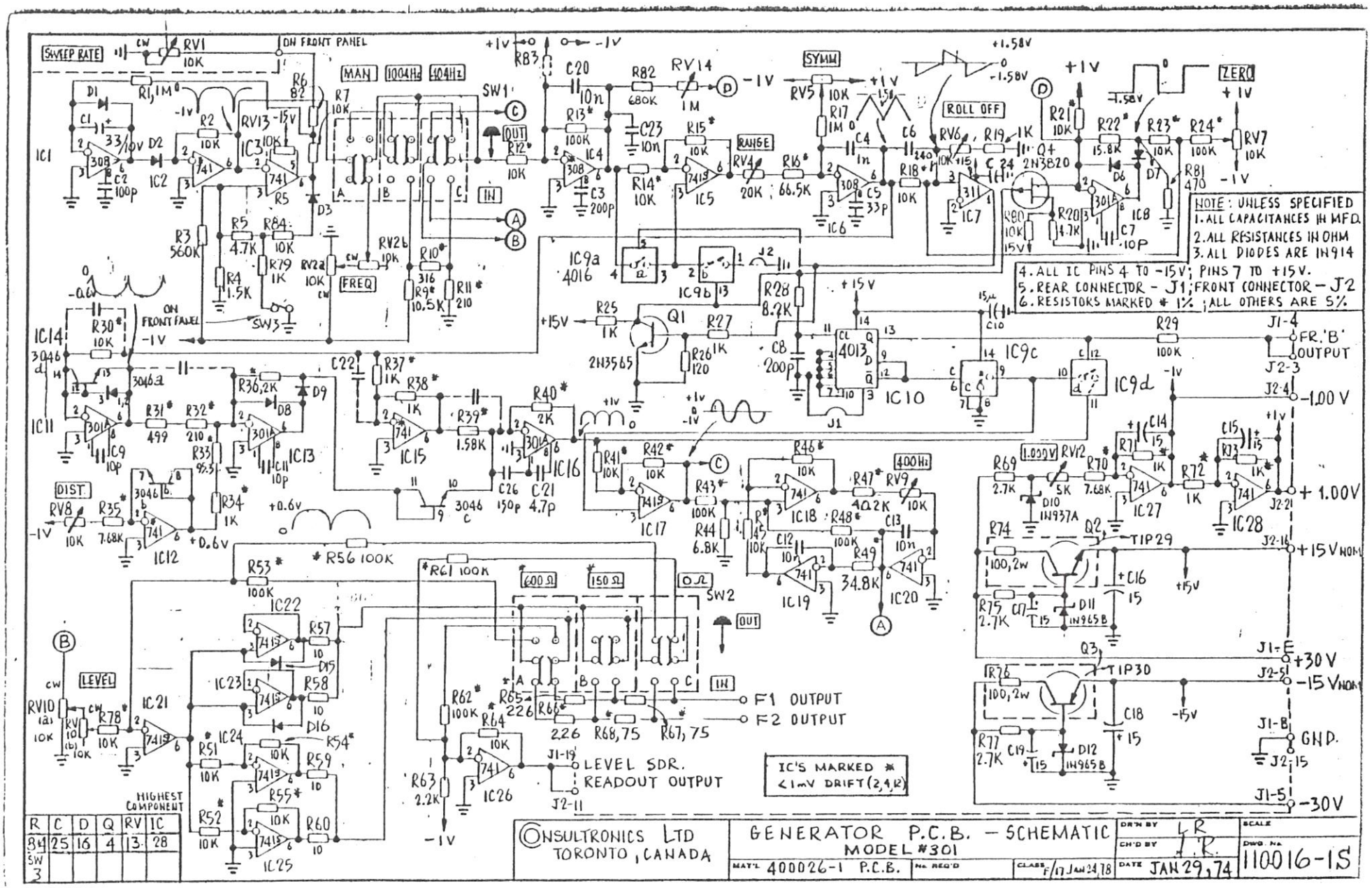
SWEEP RATE
RV1 10K
ON FRONT PANEL
MAN
1004Hz
404Hz
SW1
OUT
IN
FREQ
RV2b 10K
RV2a 10K
R10* 316
R9* 10.5K
R11* 210
R7 10K
R6 82
R1, 1M
R2 10K
RV13 10K
IC1
IC2
IC3
R3 560K
R4 1.5K
R5 4.7K
R84 10K
R79 1K
SW3
IC14 3046d
R30* 10K
3046a
IC11
R31* 499
R32* 210
R33 9.3K
R34* 1K
R36 2K
D8
D9
IC13
DIST.
RV8 10K
R35* 7.68K
IC12
+0.6V
R56 100K
R53* 100K
IC22
R57 10
D15
IC23
R58 10
D16
IC24
R54*
R51 10K
R59 10
R55* 10K
R52* 10K
R60 10
IC25
LEVEL
RV10 10K
R78* 10K
IC21
HIGHEST COMPONENT
R61 100K
600Ω
150Ω
0Ω
SW2
R62* 100K
R64 10K
R63 2.2K
IC26
R65 226
R66* 226
R68, 75
R67, 75
F1 OUTPUT
F2 OUTPUT
J1-19
LEVEL SDR.
READOUT OUTPUT
J2-11
IC'S MARKED * <1mV DRIFT (2,4,R)
R83
C20 10n
R82 680K
RV14 1M
R13* 100K
C23 10n
IC4
C3 200P
R12* 10K
R14* 10K
IC5
R15* 10K
RANGE
RV4 20K
R16* 66.5K
IC6
C5 33P
SYMM
RV5 10K
R17 1M
C4 1n
C6
ROLL OFF
RV6 10K
R19 1K
R18* 10K
IC7
C24
Q1 2N3820
R80 10K 15V
R20 4.7K
C7 10P
IC8
R21* 10K
R22* 15.8K
R23* 10K
R24* 100K
RV7 10K
D6
D7
R81 470
ZERO
NOTE: UNLESS SPECIFIED
1. ALL CAPACITANCES IN MFD.
2. ALL RESISTANCES IN OHM
3. ALL DIODES ARE 1N914
4. ALL IC PINS 4 TO -15V; PINS 7 TO +15V.
5. REAR CONNECTOR - J1; FRONT CONNECTOR - J2
6. RESISTORS MARKED * 1%; ALL OTHERS ARE 5%
IC9a 4016
IC9b
R28 8.2K
J2
R25 1K
Q1 2N3565
R27
R26 120
C8 200P
IC10 4013
J1
IC9c
C10
IC9d
R29 100K
J1-4
FR. 'B' OUTPUT
J2-3
J2-4
-1.00 V
C22
R37* 1K
R38* 1K
IC15
R39* 1.58K
R40* 2K
IC16
C26 150P
C21 4.7P
R41* 10K
R42* 10K
IC17
R43* 100K
R44 6.8K
R46* 10K
IC18
R47* 402K
RV9 10K
400Hz
R48* 100K
C13 10n
R49* 34.8K
IC19
IC20
C12 10
R45 10K
R69 2.7K
1.000V RV12 5K
D10 1N937A
R70 7.68K
R71 1K
IC27
C14 15
R72 1K
R73 1K
C15 15
IC28
J2-21
+ 1.00V
R74 100, 2W
Q2 TIP29
J2-16
+15V NOM
C16 15
R75 2.7K
C17 15
D11 1N965B
J1-E
+30V
Q3 TIP30
J2-5
-15V NOM
R76 100, 2W
C18 15
R77 2.7K
C19 15
D12 1N965B
J1-B
GND.
J2-15
J1-5
-30V
CONSULTRONICS LTD
TORONTO, CANADA
GENERATOR P.C.B. - SCHEMATIC
MODEL #301
MAT'L 400026-1 P.C.B.
DRW'N BY L.R.
CH'D BY
DATE JAN 29, 74
SCALE
DWG. No. 110016-1S
R C D Q RV IC
84 25 16 4 13 28
SW 3

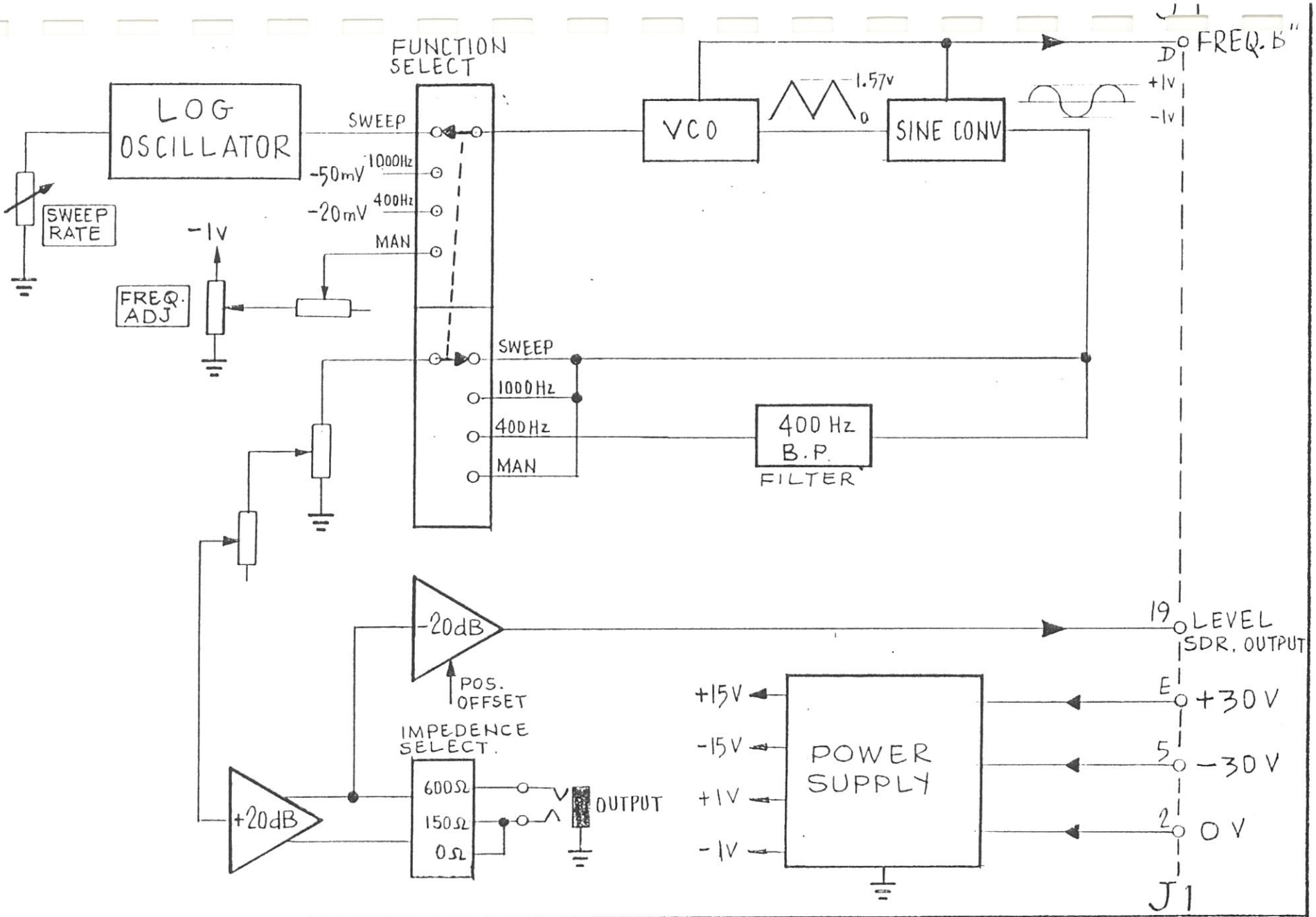

CONSULTRONICS LTD. TORONTO, CANADA	GENERATOR UNIT — BLOCK SCHEMATIC AUDIO ANALYZER MODEL #301	DR'N BY LR	SCALE —
		CH'D BY	DWG. No. 110016-1B
	MAT'L / No. REQ'D / CLASS	DATE JAN 30, 1974	

TRANSTEX 15 10M-9-73

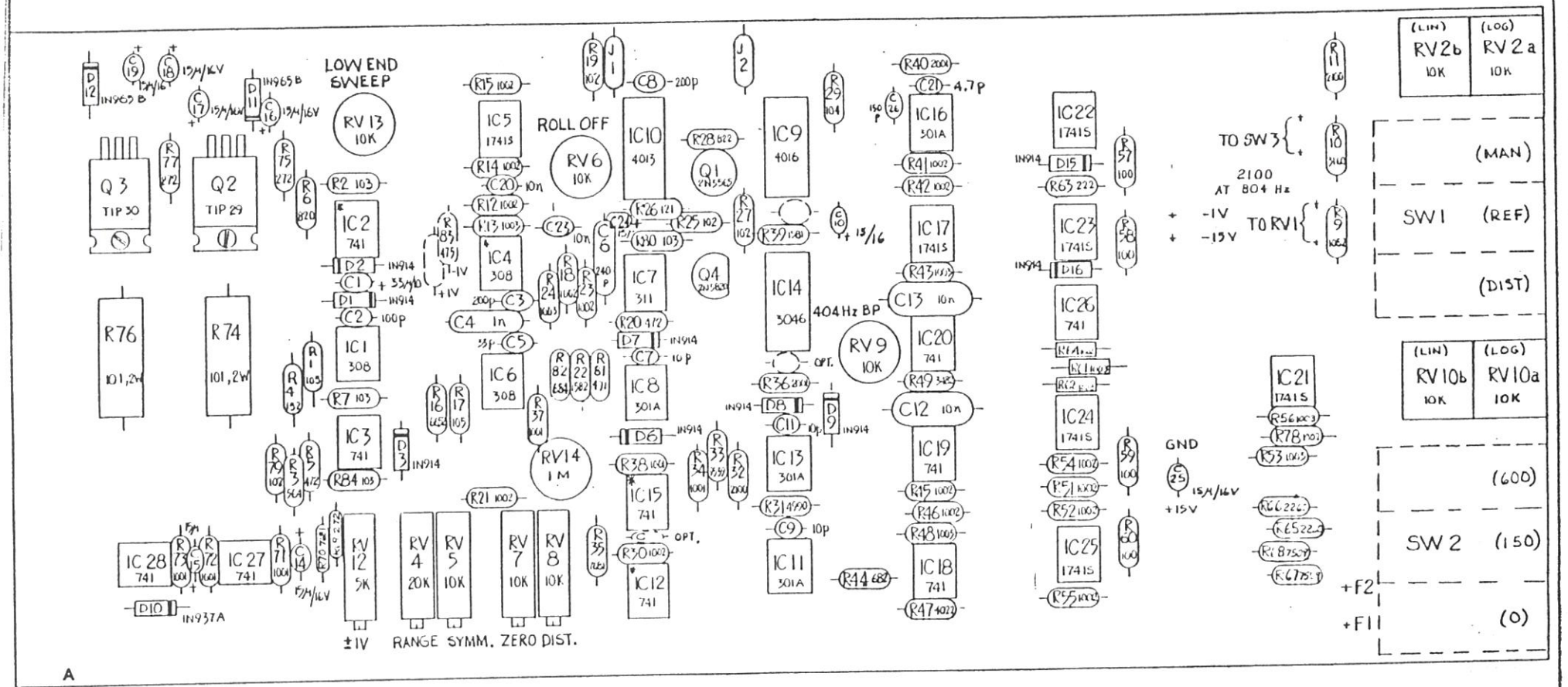

A

FRONT OF UNIT →

COMPONENT SIDE

RESISTOR VALUES INDICATE COLOUR CODE EQUIV.

IC'S 2,4,12 ARE SELECTED ≤ <1mV DRIFT

ONSULTRONICS LTD. TORONTO, CANADA.	GENERATOR P.C.B. ASSY. MODEL # 301	DR'N BY RR	SCALE 2:1
	DATE 400026-1	CH'D BY	DWG. No. 110016-1
		DATE APR. 30 1975	

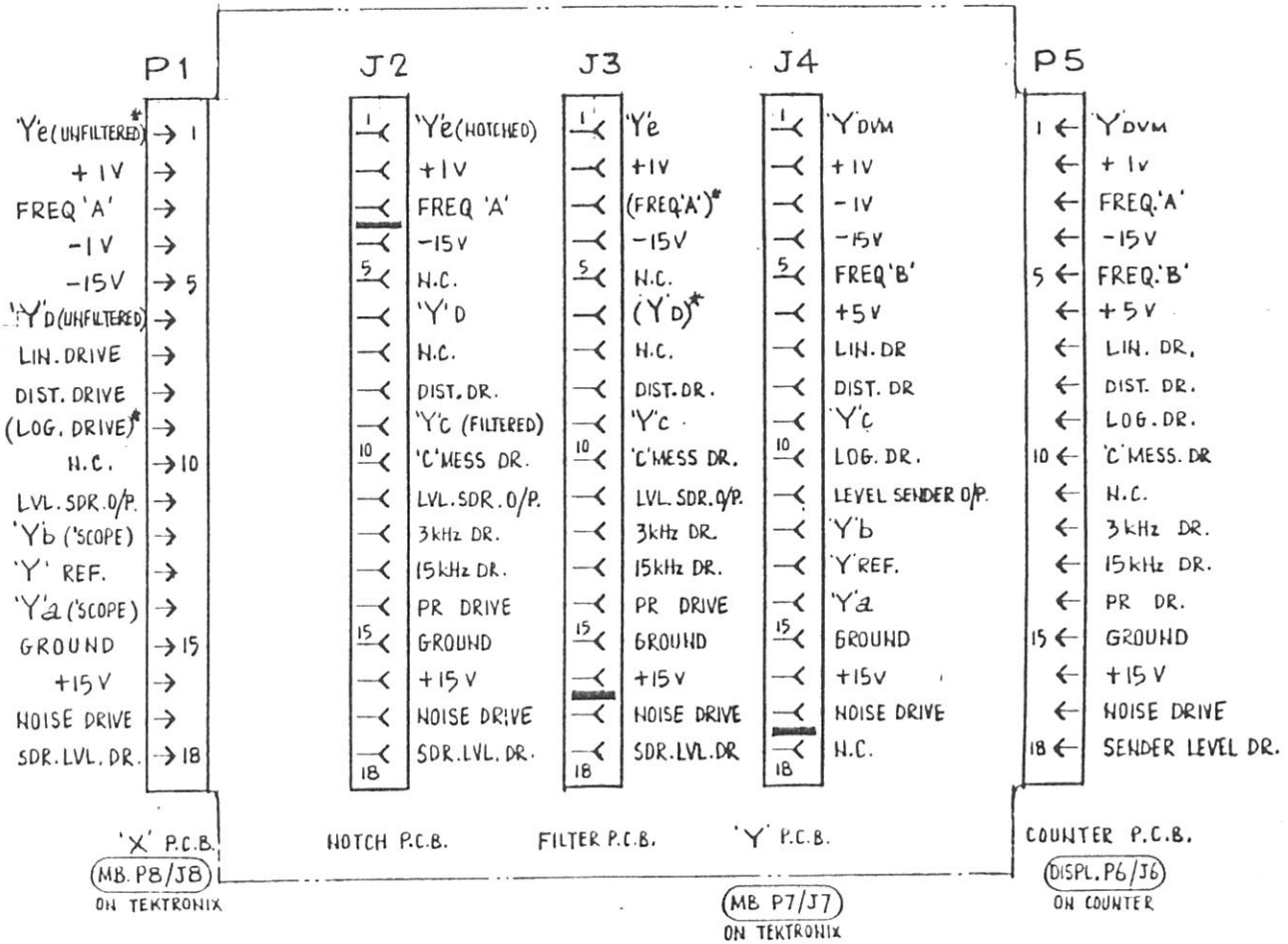

NOTE:-
1. * INDICATE UNUSED, BUT INTERNALLY CONNECTED PINS.
2. ▬ POLARIZING KEY + LOCATION

CONSULTRONICS LTD. TORONTO, CANADA	STRAP P.C.B. — SCHEMATIC MODEL #302	DR'N BY LR (MAY 2.75)	SCALE —
	MATL 400022-1 P.C.B.	CH'D BY	DWG No. 110017-1S
		DATE FEB. 7, 1974	

TRANSTEX 18 10M-9-72

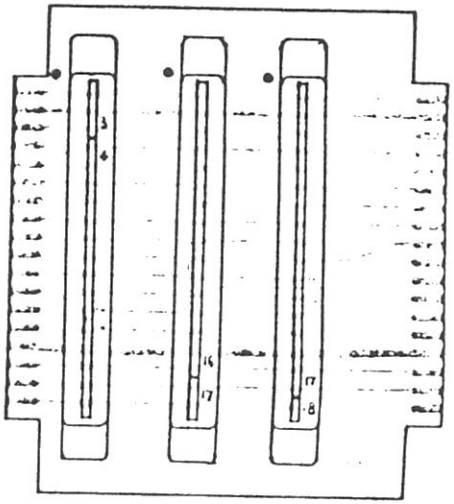

NOTE:-

1. THREE CONNECTORS REQD ON THIS ASSEMBLY.

2. - SHOWS THE POSITION OF POLARISING KEYS

CONSULTRONICS LTD. TORONTO, ONTARIO	STRAP P.C.B. - ASSEMBLY MODEL 302	EL. Eng. L.R.	11 110017-1
	400022-1		

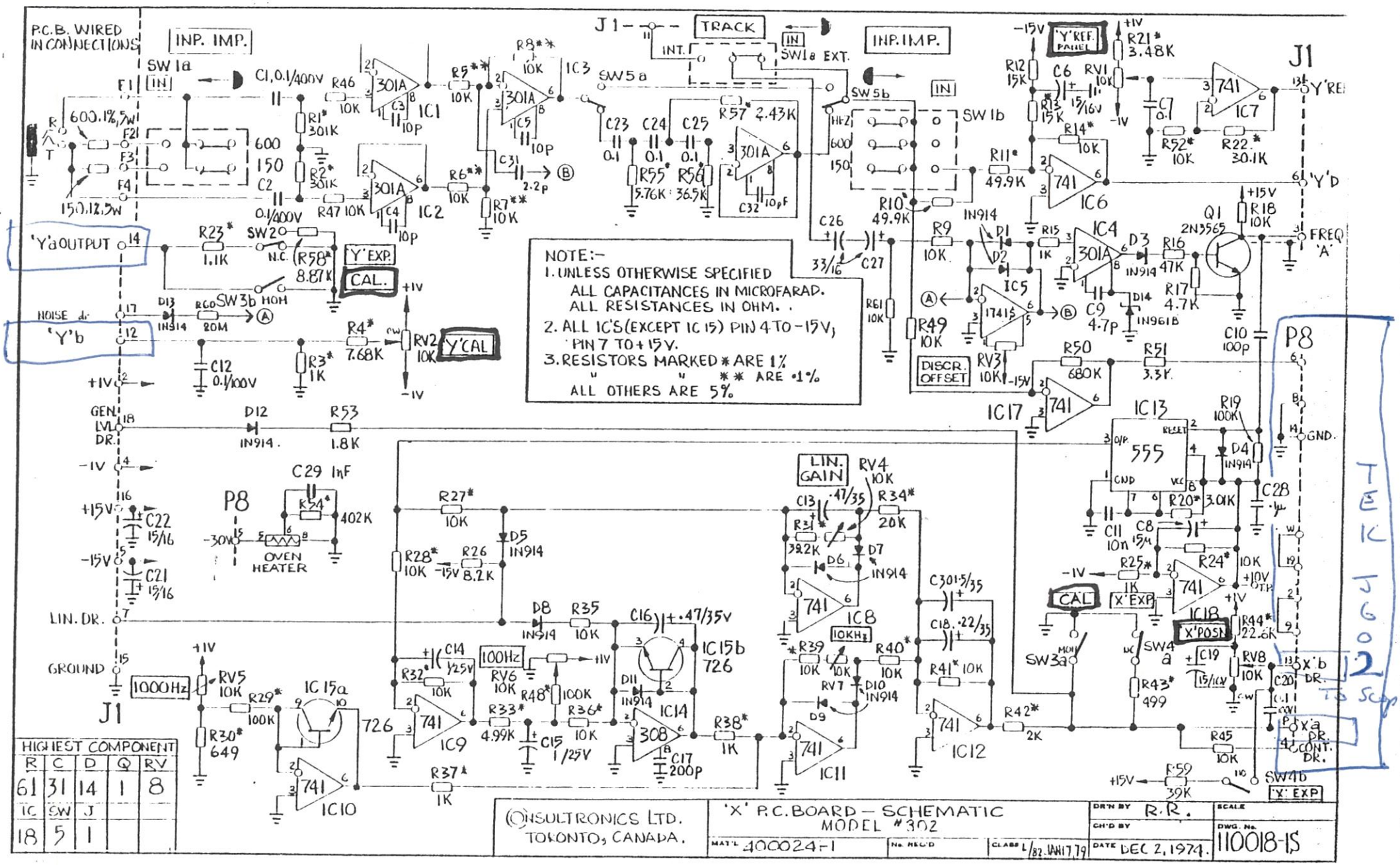
P.C.B. WIRED IN CONNECTIONS
INP. IMP.
SW 1a
IN
C1, 0.1/400V
R46 10K
R1* 301K
R2* 301K
R47 10K
C2 0.1/400V
R5** 10K
R6** 10K
R7** 10K
R8** 10K
IC1
IC2
IC3
301A
C3 10P
C4 10P
C5 10P
C31 2.2p
J1
TRACK
INT.
SW1a EXT.
SW5a
SW5b
C23 0.1
C24 0.1
C25 0.1
R55* 5.76K
R56* 36.5K
R57* 2.43K
C32 10pF
INP. IMP.
SW1b
HF
600
150
R10* 49.9K
R61 10K
R49 10K
C26 33/16
C27
R9 10K
IN914
D1
D2
IC5
1741
R11* 49.9K
R12 15K
R13* 15K
C6 15/16V
RV1 10K
'Y' REF. PANEL
R21* 3.48K
R14* 10K
IC6
741
IC7
R52* 10K
R22* 30.1K
C7 0.1
J1
'Y' REF
'Y' D
R15 1K
IC4
301A
D3 IN914
R16 47K
R17 4.7K
C9 4.7P
D14 IN961B
Q1 2N3565
R18 10K
FREQ 'A'
C10 100p
R50 680K
R51 3.3K
RV3 10K
DISCR. OFFSET
IC17
741
IC13
555
RESET
O/P
GND
VCC
R19 100K
D4 IN914
C28 .1μ
R20* 3.01K
C11 10n
C8 15μ
R24* 10K
R25* 1K
741
IC18
X' POSN
R44* 22.6K
RV8 10K
C19 15/16V
C20 .01
C21 .01
P8
GND.
X'b DR.
X'a DR.
CONT. DR.
SW4b
X' EXP
R45 10K
R59 39K
SW4a
R43* 499
SW3a
CAL
X' EXP
R42* 2K
IC12
741
C30 1.5/35
C18 .22/35
R41* 10K
R40* 10K
IC11
741
R39 10K
10KHz
RV7 10K
D10 IN914
D9
IC8
741
C13 .47/35
RV4 10K
R34* 20K
R31* 39.2K
D6
D7 IN914
LIN. GAIN
R27* 10K
D5 IN914
R28* 10K
R26 8.2K
-15V
D8 IN914
R35 10K
C16 .47/35V
IC15b 726
D11 IN914
IC14
308
R38* 1K
C17 200P
R36* 10K
R33* 4.99K
C15 1/25V
R48* 100K
RV6 10K
100Hz
C14 1/25V
R32* 10K
IC9
741
R37* 1K
IC10
741
IC15a
726
R29* 100K
RV5 10K
R30* 649
1000Hz
LIN. DR.
GROUND
J1
C22 15/16
C21 15/16
P8
C29 1nF
R54* 402K
OVEN HEATER
-30V
GEN. LVL DR.
D12 IN914
R53 1.8K
NOISE
'Y'b
D13 IN914
R60 20M
SW3b
MOM
R4* 7.68K
RV2 10K
'Y' CAL
C12 0.1/100V
R3* 1K
'Y'a OUTPUT
R23* 1.1K
SW2
N.C.
R58* 8.87K
'Y' EXP.
CAL.
NOTE:-
1. UNLESS OTHERWISE SPECIFIED ALL CAPACITANCES IN MICROFARAD. ALL RESISTANCES IN OHM.
2. ALL IC'S (EXCEPT IC 15) PIN 4 TO -15V, PIN 7 TO +15V.
3. RESISTORS MARKED * ARE 1%
" " ** ARE .1%
ALL OTHERS ARE 5%
HIGHEST COMPONENT
R 61
C 31
D 14
Q 1
RV 8
IC 18
SW 5
J 1
CONSULTRONICS LTD. TORONTO, CANADA.
'X' P.C. BOARD — SCHEMATIC MODEL #302
DR'N BY R.R.
CH'D BY
DATE DEC 2, 1974.
SCALE
DWG. No. 110018-1S
MAT'L 400024-1
No. REQ'D
CLASS L/82.JAN17,79
TEK J602
To Scope

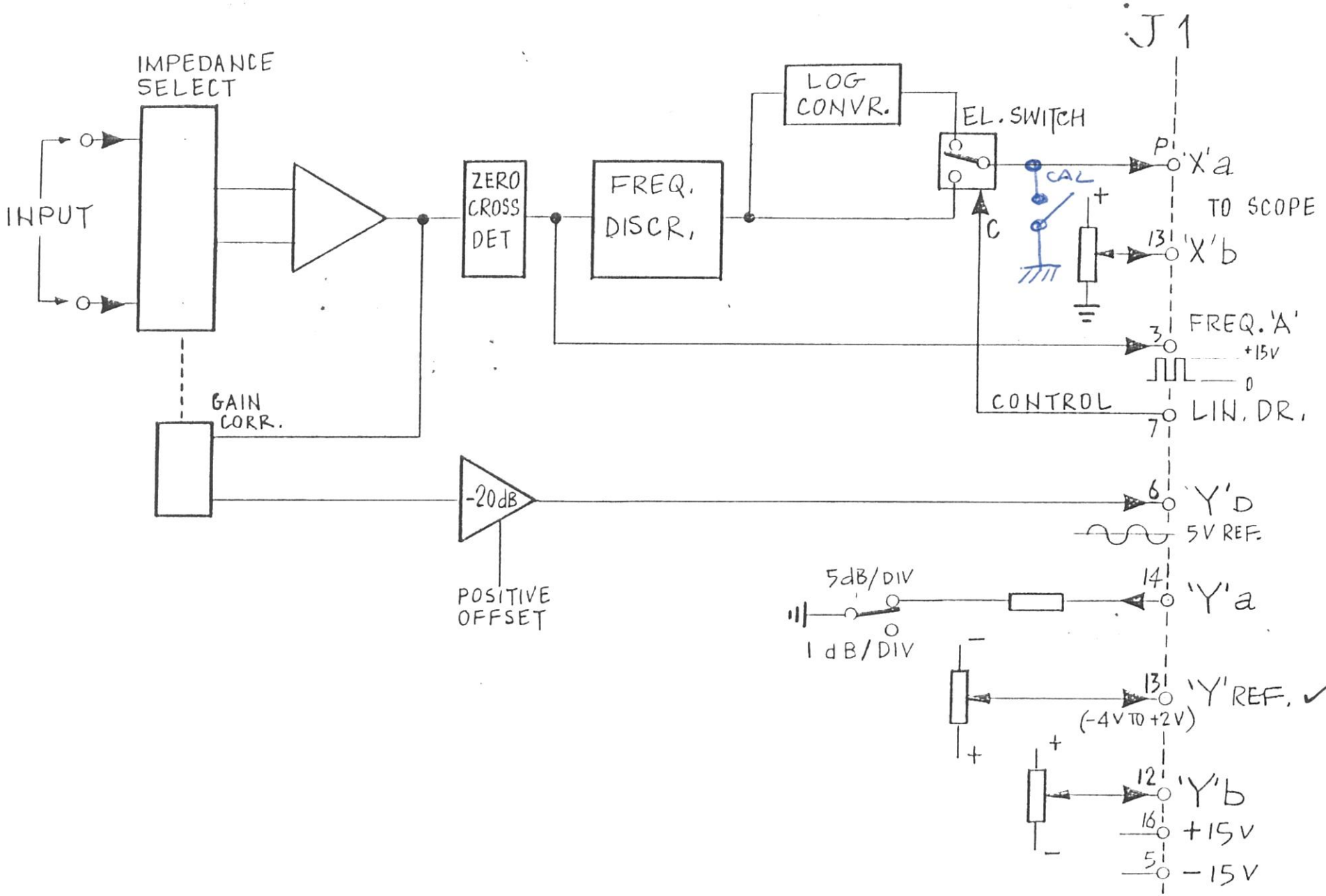

CONSULTRONICS LTD TORONTO CANADA	"X" P.C.B – BLOCK SCHEMATIC MODEL #302	DR'N BY LR	SCALE —	
		CH'D BY LR	DWG. No. 110018-1B	
	MAT'L / No. REQ'D / CLASS REV A JUNE/71	DATE FEB 1, 1974		

TRANSTEX 15 10M-9-73

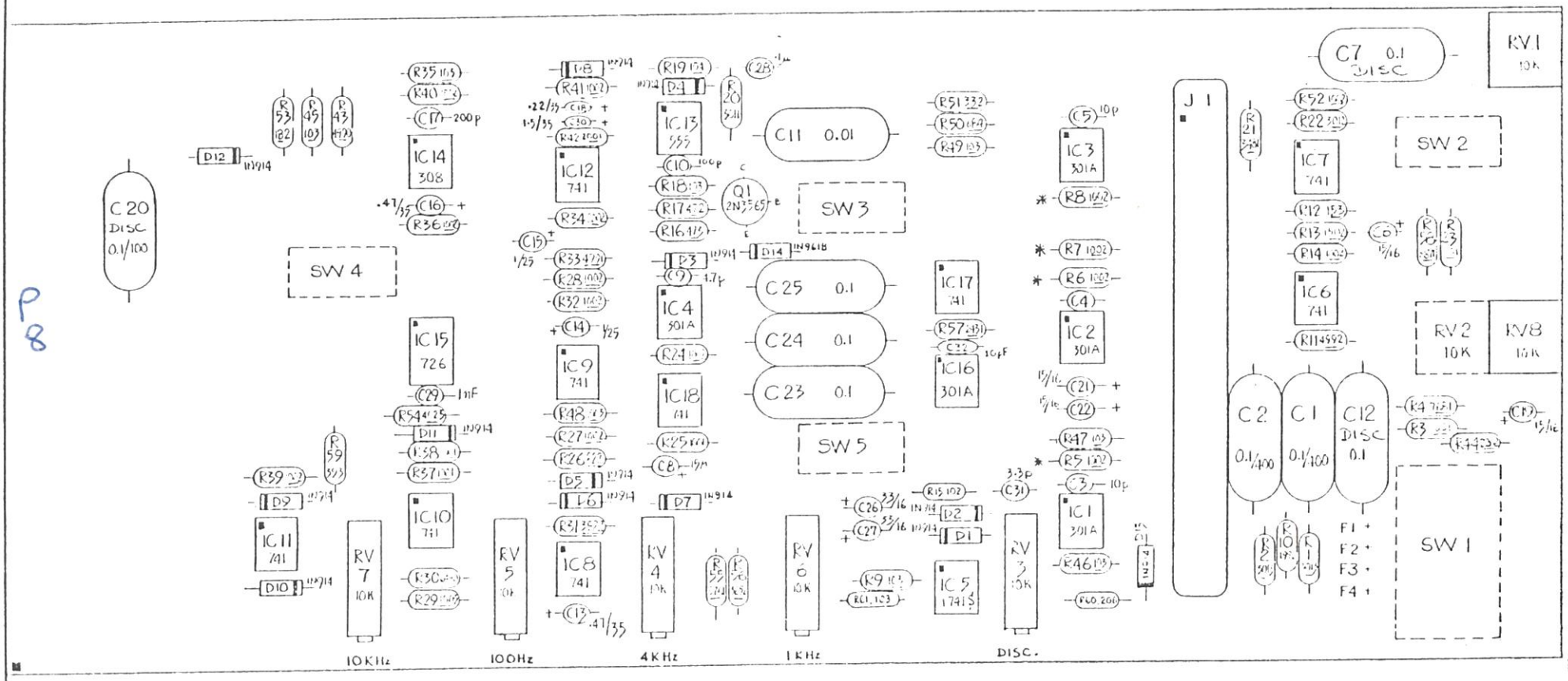

P 8

FRONT OF UNIT →

COMPONENT SIDE

RESISTOR VALUES INDICATE COLOUR CODE EQUIV.

RESISTORS MARKED * ARE ·1% SELECTED TYPE.

CINEULTRONICS LTD.	X'PC BOARD ASSY.	DRN BY RP / CHK BY	SCALE 2:1 / DWG NO. 110018-1

NOTE:-
1. UNLESS OTHERWISE SPECIFIED ALL CAPACITANCES IN MICROFARADS ALL RESISTANCES IN OHMS.
2. IC1 – IC15, PIN 4 TO -15V; PIN 7 TO +15V
3. RESISTORS MARKED * ARE 1%, ALL OTHERS ARE 5%.

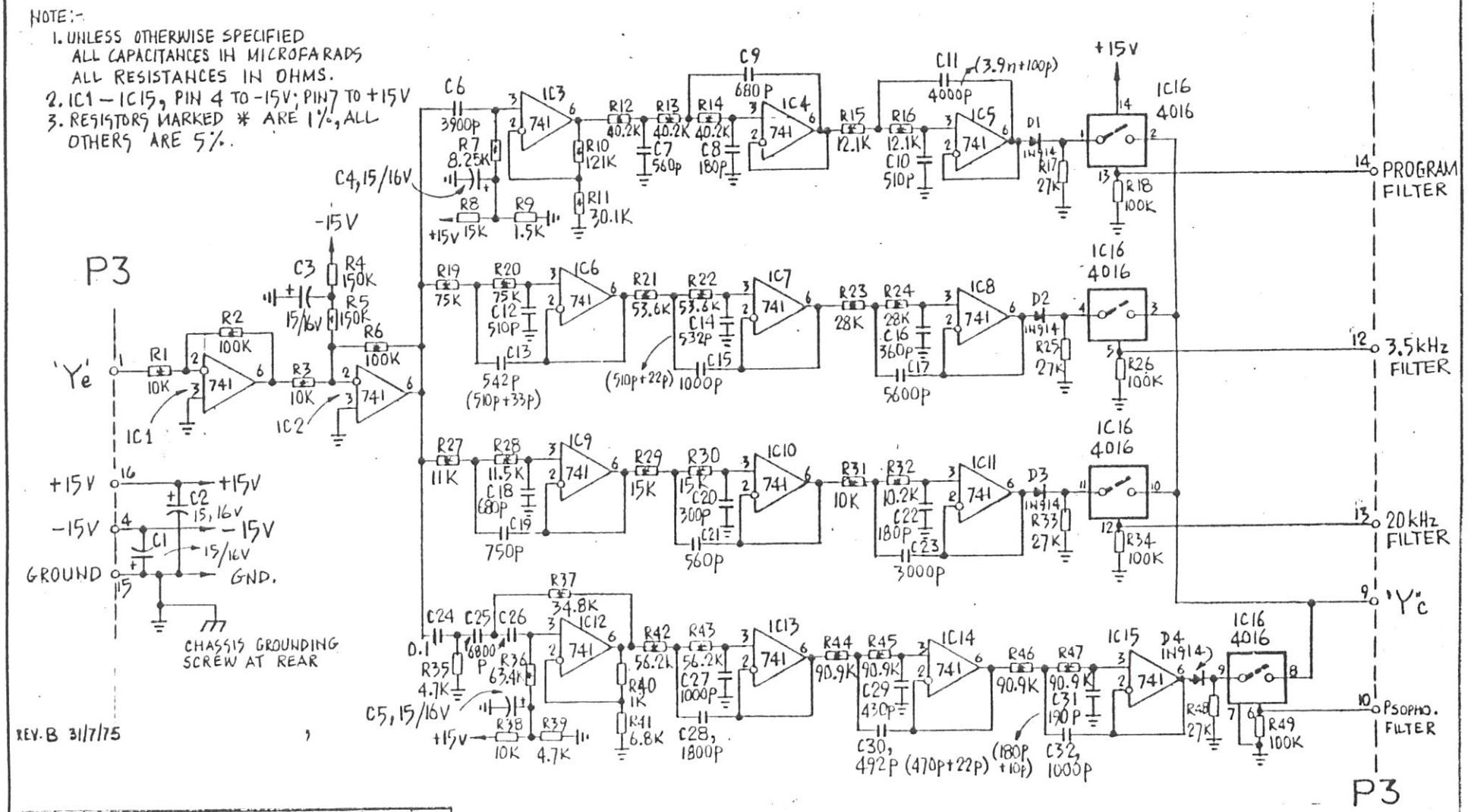

REV. B 31/7/75

HIGHEST COMPONENT							
R	C	D	IC				
49	32	4	16				

CONSULTRONICS LTD
TORONTO, CANADA

SCHEMATIC – CCITT FILTER P.C.B.
MODEL #302

DR'N BY K.R.
CH'D BY K.R.
DATE MAR. 20, '75
SCALE —
DWG. No. 110047-15

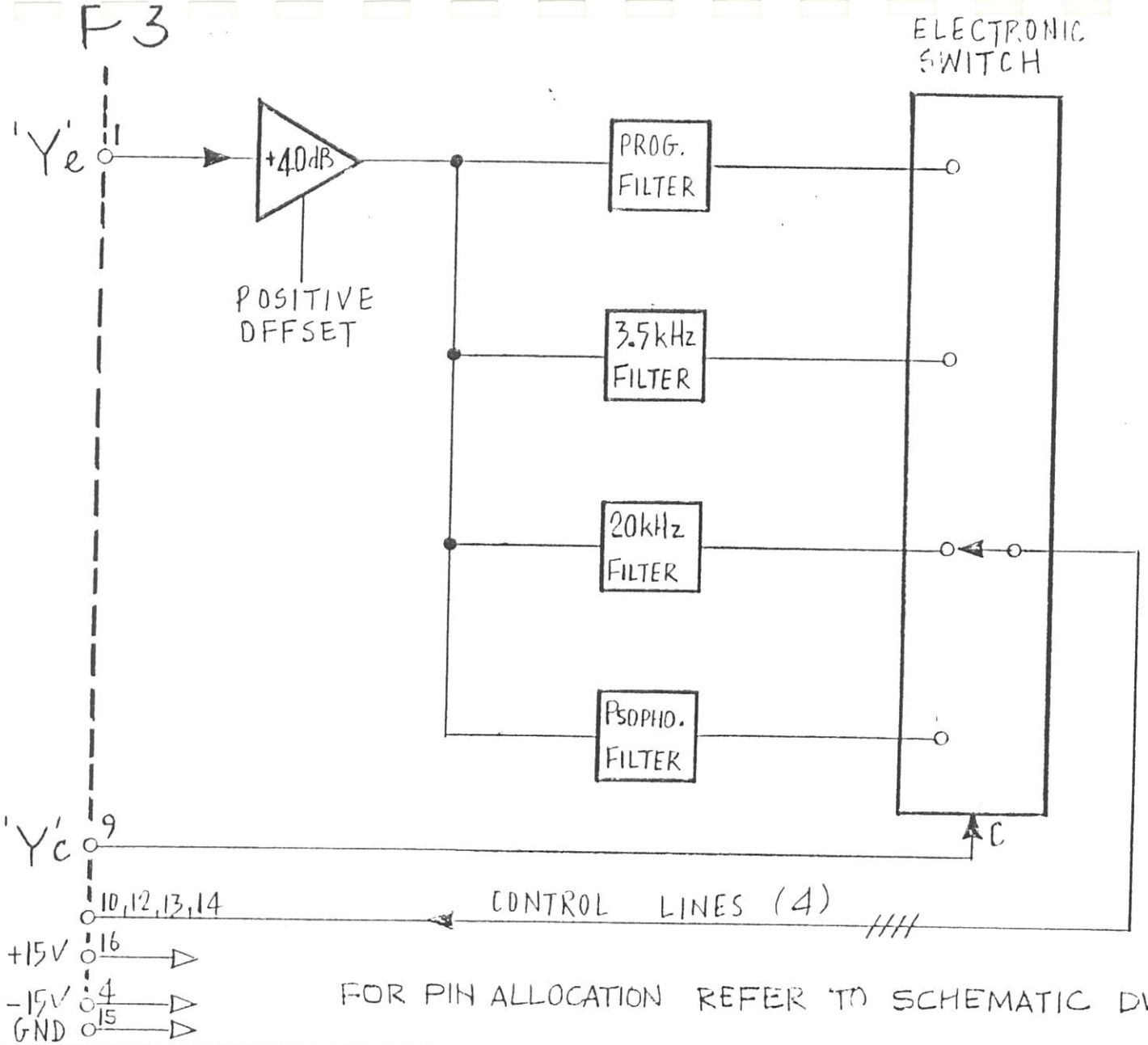

FOR PIN ALLOCATION REFER TO SCHEMATIC DWG. NO. 110047-1S

CONSULTRONICS LTD, TORONTO, CANADA.	CCITT FILTER — BLOCK SCHEMATIC MODEL 302	DR'N BY LR	SCALE —
		CH'D BY A.R.	DWG. No. 110047-1B
	MAT'L / No. REQ'D / CLASS	DATE JUNE 14, 1977	

TRANSTEX 15 5M-11-74

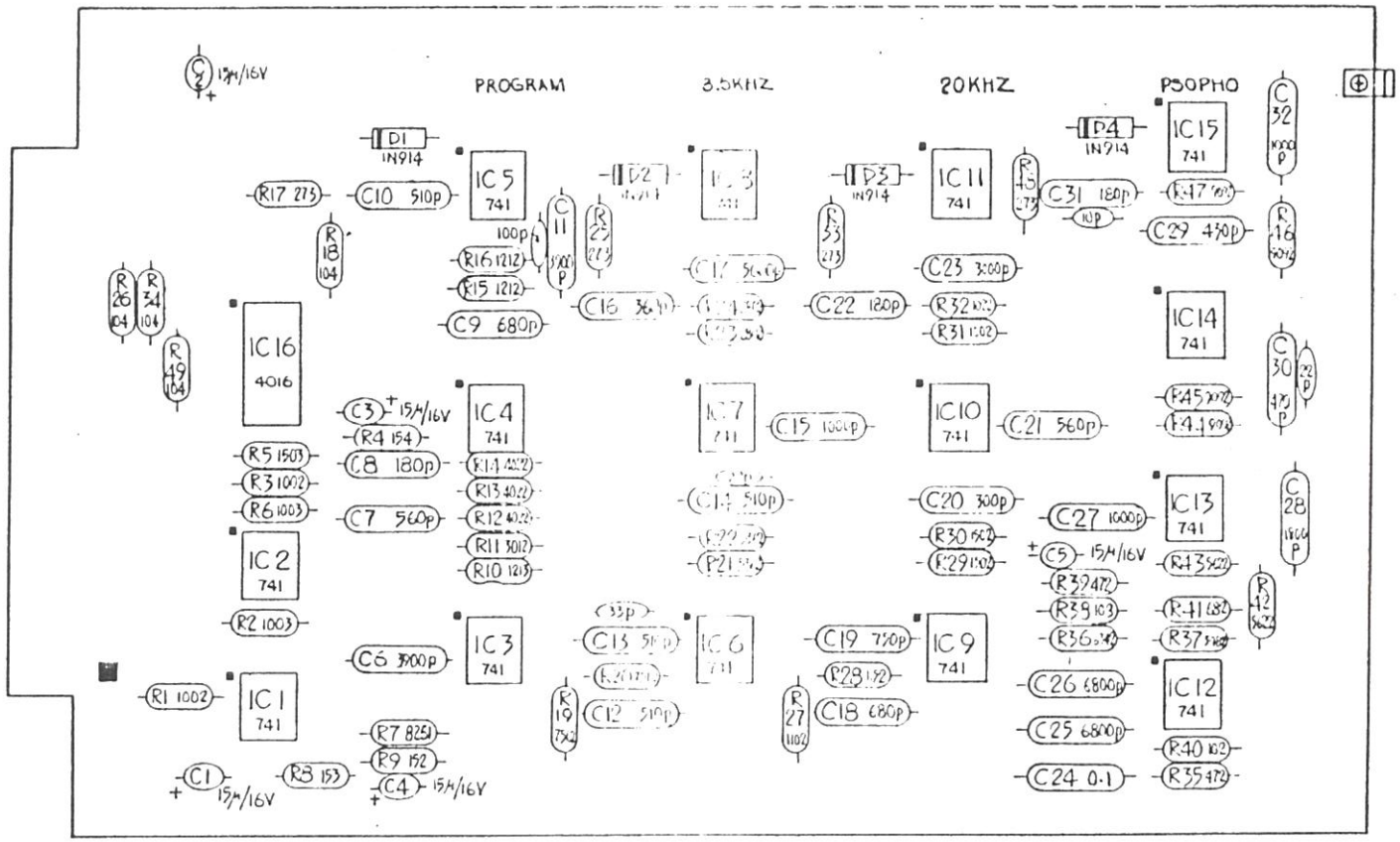

RESISTOR VALUES INDICATE COLOUR CODE EQUIV.

REV. B. 31/7/75
REV. A. 3/6/75

CONSULTRONICS LTD. TORONTO, CANADA.	C.C.I.T.T. P.C.B ASSY. MODEL #302	DRW'N BY R.R. / CH'K'D BY L.R. / DATE APR. 30. 1975	SCALE 2:1 / DWG No. 110047-1
	MAT'L / No. REQ'D / CLASS		

TRANSFER 15 IN 4-73