COLOR CODE

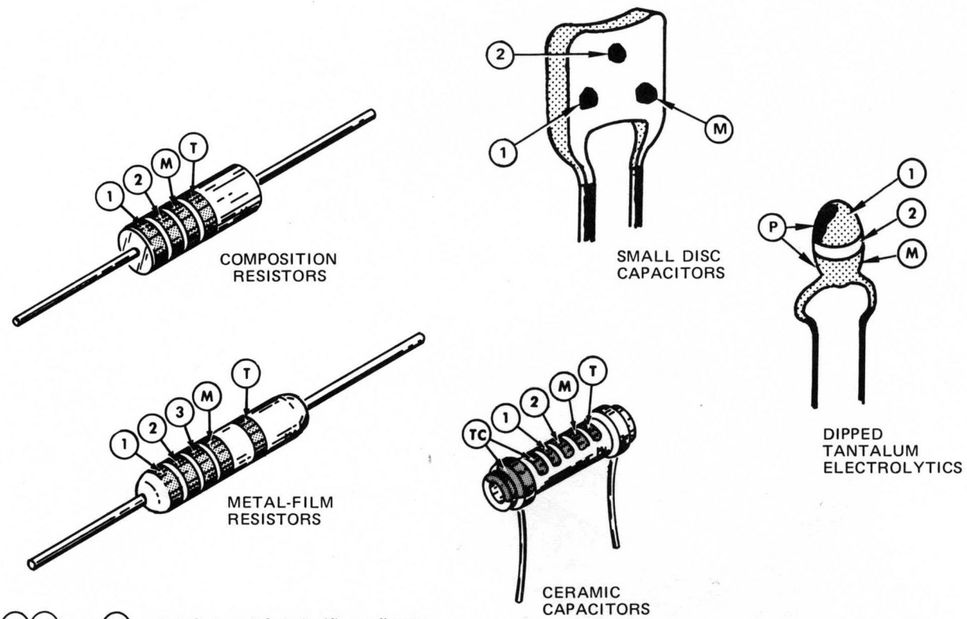

(1)(2) and (3) – 1st, 2nd, and 3rd significant figures

(M) –multiplier (T) –tolerance

(TC) –temperature coefficient

(P) –polarity and voltage rating

(T) and/or (TC) color code may not be present on some capacitors

COLOR	SIGNIFICANT FIGURES	RESISTORS		CAPACITORS			DIPPED TANTALUM VOLTAGE RATING
		MULTIPLIER	TOLERANCE	MULTIPLIER	TOLERANCE		
					over 10 pF	under 10 pF	
BLACK	0	1	---	1	±20%	±2 pF	4 VDC
BROWN	1	10	±1%	10	±1%	±0.1 pF	6 VDC
RED	2	10^2 or 100	±2%	10^2 or 100	±2%	---	10 VDC
ORANGE	3	10^3 or 1 K	±3%	10^3 or 1000	±3%	---	15 VDC
YELLOW	4	10^4 or 10 K	±4%	10^4 or 10,000	+100% –9%	---	20 VDC
GREEN	5	10^5 or 100 K	±½%	10^5 or 100,000	±5%	±0.5 pF	25 VDC
BLUE	6	10^6 or 1 M	±¼%	10^6 or 1,000,000	---	---	35 VDC
VIOLET	7	---	±1/10%	---	---	---	50 VDC
GRAY	8	---	---	10^{-2} or 0.01	+80% –20%	±0.25 pF	---
WHITE	9	---	---	10^{-1} or 0.1	±10%	±1 pF	---
GOLD	–	10^{-1} or 0.1	±5%	---	---	---	---
SILVER	–	10^{-2} or 0.01	±10%	---	---	---	---
NONE	–	---	±20%	---	±10%	±1 pF	---

(1861-20A)4206-31

Figure 2. Color code for resistors and capacitors.

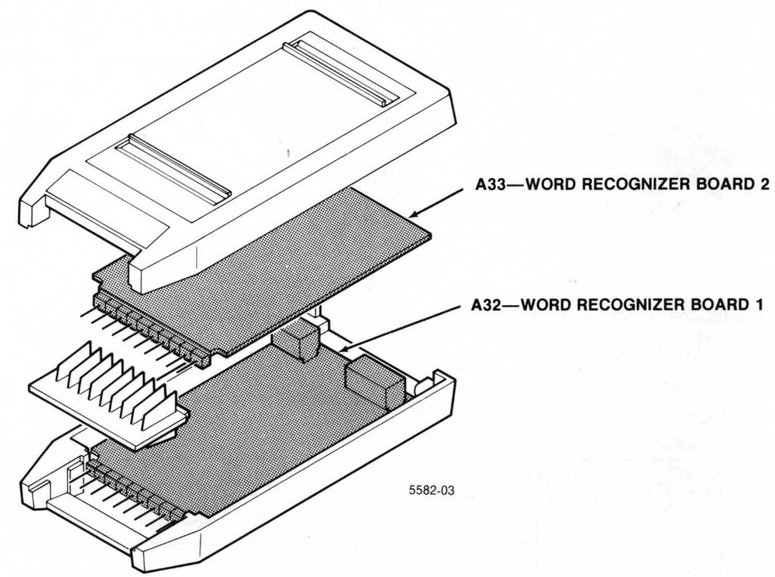

Figure 6. Word Recognizer board locations.

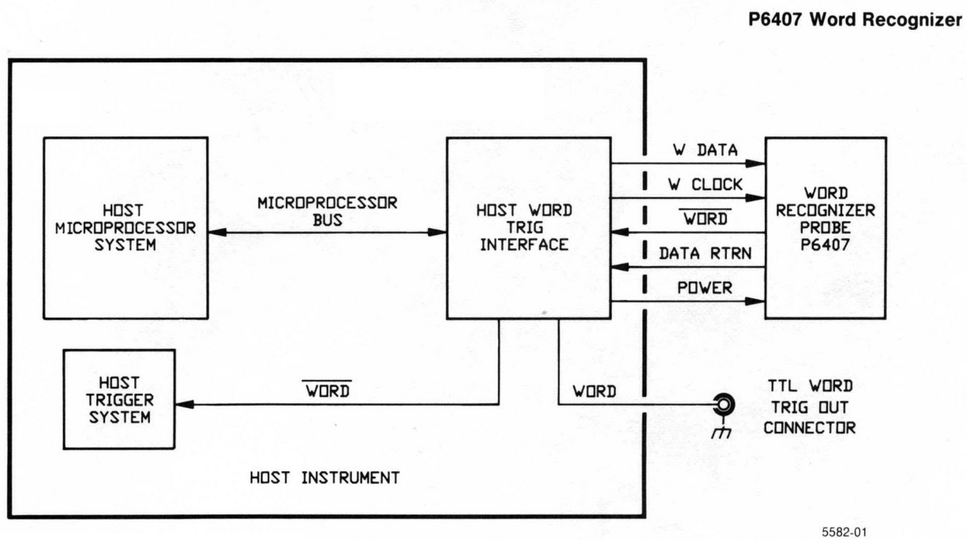

Figure 3. Typical system.

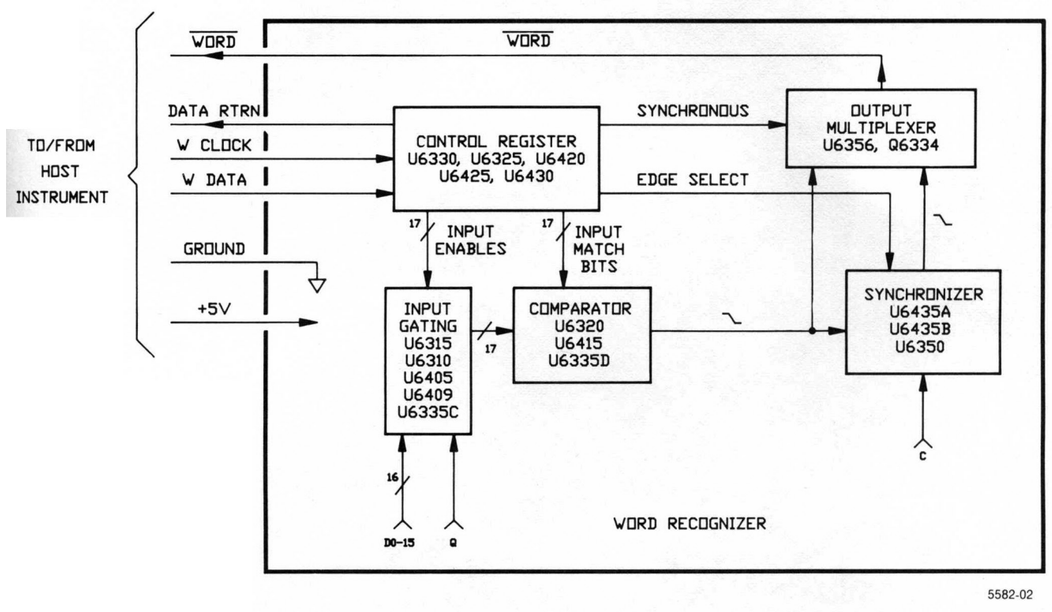

Figure 4. Block diagram.

WORD RECOGNIZER

ASSEMBLY A32

CIRCUIT NUMBER	SCHEM LOCATION	BOARD LOCATION	CIRCUIT NUMBER	SCHEM LOCATION	BOARD LOCATION	CIRCUIT NUMBER	SCHEM LOCATION	BOARD LOCATION	CIRCUIT NUMBER	SCHEM LOCATION	BOARD LOCATION
C6303	1N	2A	Q6334	5S	2B	U6310A	4J	1A	U6335A	3P	2B
C6334	1N	2C				U6310B	4J	1A	U6335B	4N	2B
C6338	3S	2C	R6301	4D	1A	U6310C	4J	1A	U6335C	4M	2B
			R6302	4D	1A	U6310D	5H	1A	U6335D	4M	2B
CR6330	2S	2C	R6303	4D	2A	U6310	1S	1A	U6335	2S	2B
CR6335	3P	2C	R6304	4D	1A	U6315A	3K	2A	U6350A	4P	1C
CR6340	2P	2C	R6305	4D	2A	U6315B	3K	2A	U6350B	3N	1C
			R6306	3D	2A	U6315C	4K	2A	U6350	2S	1C
J6300	3C	2A	R6307	3D	2A	U6315D	4K	2A	U6356A	2S	2C
J6370	1C	2C	R6308	3D	2A	U6315	1S	2A	U6356B	4S	2C
J6380	5E	1C	R6325	5D	2B	U6320	1P	1B	U6356C	4S	2C
J6380	5N	1C	R6330	2S	1C	U6320	3L	1B	U6356D	2P	2C
J6385	5D	2C	R6336	4P	2C	U6325	1S	2B	U6356	2S	2C
J6385	5F	2C	R6340	4S	2C	U6325	2F	2B			
			R6350	2P	1C	U6330	1E	1B			
L6354	2P	2C				U6330	2S	1B			

ASSEMBLY A33

CIRCUIT NUMBER	SCHEM LOCATION	BOARD LOCATION	CIRCUIT NUMBER	SCHEM LOCATION	BOARD LOCATION	CIRCUIT NUMBER	SCHEM LOCATION	BOARD LOCATION	CIRCUIT NUMBER	SCHEM LOCATION	BOARD LOCATION
C6410	9E	3B	R6402	7D	3A	U6405C	7K	3A	U6425	10G	4B
C6440	9F	4C	R6403	6D	3A	U6405D	7K	3A	U6425	9J	4B
			R6404	7D	4A	U6405	10G	3A	U6430	10G	3C
J6400	6C	4A	R6405	8D	4A	U6409A	7J	4A	U6430	8H	3C
			R6406	6D	4A	U6409B	7J	4A	U6435A	7M	4C
P6380	5E	4C	R6407	7D	4A	U6409C	8H	4A	U6435B	7N	4C
P6380	5N	4C	R6408	7D	4A	U6409D	8J	4A	U6435C	6N	4C
P6385	5D	3C	R6432	10J	4C	U6409	10G	4A	U6435D	6N	4C
P6385	5F	3C	R6443	5E	4C	U6415	10F	4B	U6435	10G	4C
						U6415	8L	4B			
R6400	7D	3A	U6405A	6K	3A	U6420	10G	3B			
R6401	7D	4A	U6405B	7K	3A	U6420	5G	3B			

CHASSIS MOUNTED PARTS

CIRCUIT NUMBER	SCHEM LOCATION	BOARD LOCATION	CIRCUIT NUMBER	SCHEM LOCATION	BOARD LOCATION	CIRCUIT NUMBER	SCHEM LOCATION	BOARD LOCATION	CIRCUIT NUMBER	SCHEM LOCATION	BOARD LOCATION
J2732	1B	CHASSIS	P6304	4C	CHASSIS	P6400	6C	CHASSIS	P6408	7C	CHASSIS
			P6305	4C	CHASSIS	P6401	8C	CHASSIS	P6409	7C	CHASSIS
P2732	1B	CHASSIS	P6306	4C	CHASSIS	P6402	8C	CHASSIS	P6410	6C	CHASSIS
P5990	1A	CHASSIS	P6307	4C	CHASSIS	P6403	8C	CHASSIS			
P6300	3C	CHASSIS	P6308	4C	CHASSIS	P6404	7C	CHASSIS	W5990	1B	CHASSIS
P6301	3C	CHASSIS	P6309	4C	CHASSIS	P6405	7C	CHASSIS	W6300	5C	CHASSIS
P6302	3C	CHASSIS	P6310	5C	CHASSIS	P6406	7C	CHASSIS	W6370	2C	CHASSIS
P6303	3C	CHASSIS	P6370	1C	CHASSIS	P6407	7C	CHASSIS	W6400	8C	CHASSIS

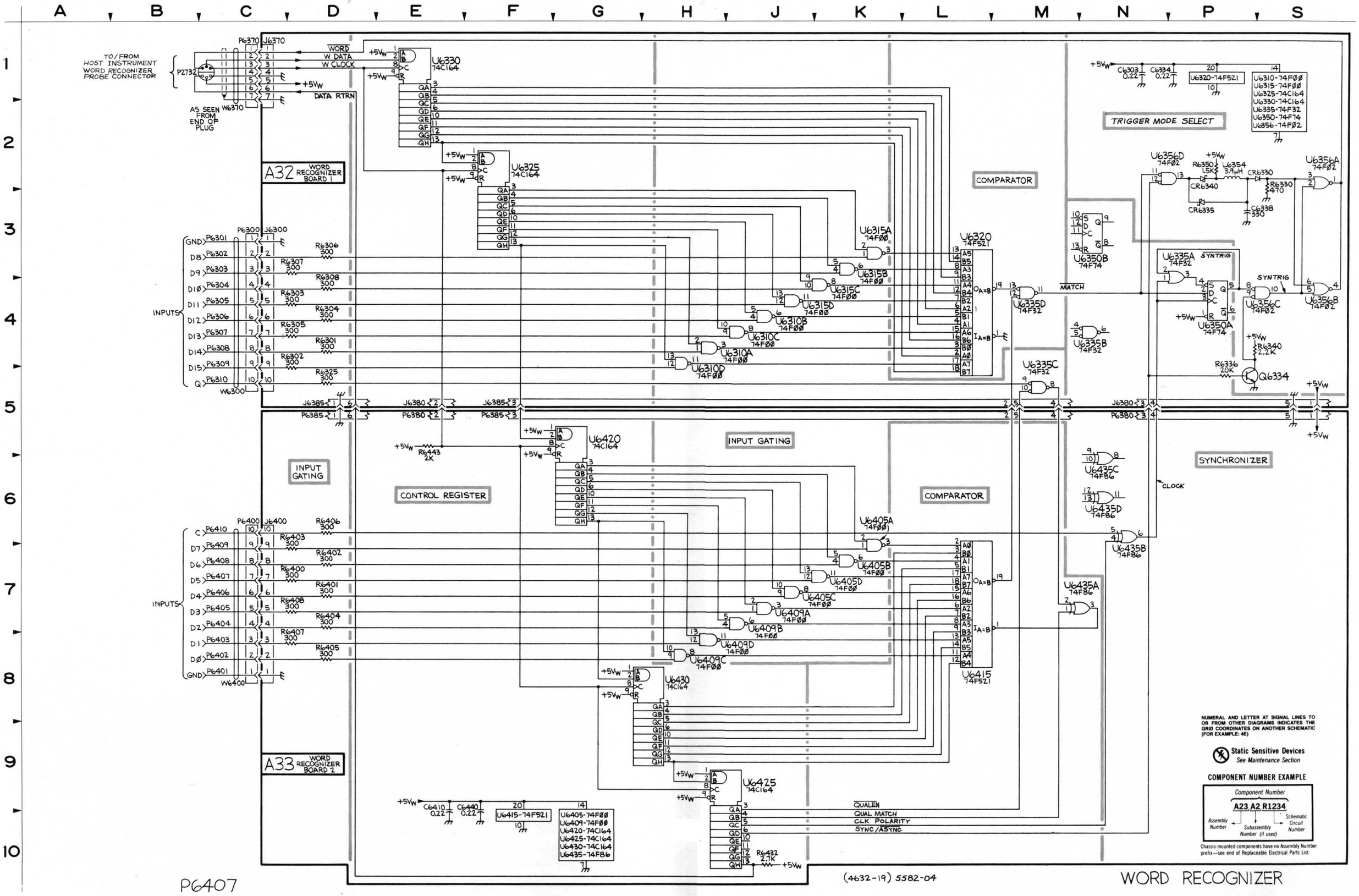

P6407

(4632-19) 5582-04

WORD RECOGNIZER

CIRCUIT BOARDS
BOARD LOCATOR

WORD RECOGNIZER

ASSEMBLY A32

CIRCUIT NUMBER	SCHEM LOCATION	BOARD LOCATION	CIRCUIT NUMBER	SCHEM LOCATION	BOARD LOCATION	CIRCUIT NUMBER	SCHEM LOCATION	BOARD LOCATION	CIRCUIT NUMBER	SCHEM LOCATION	BOARD LOCATION
C6303	1N	2A	Q6334	5S	2B	U6310A	4J	1A	U6335A	3P	2B
C6334	1N	2C				U6310B	4J	1A	U6335B	4N	2B
C6338	3S	2C	R6301	4D	1A	U6310C	4J	1A	U6335C	4M	2B
			R6302	4D	1A	U6310D	5H	1A	U6335D	4M	2B
CR6330	2S	2C	R6303	4D	2A	U6310	1S	1A	U6335	2S	2B
CR6335	3P	2C	R6304	4D	1A	U6315A	3K	2A	U6350A	4P	1C
CR6340	2P	2C	R6305	4D	2A	U6315B	3K	2A	U6350B	3N	1C
			R6306	3D	2A	U6315C	4K	2A	U6350	2S	1C
J6300	3C	2A	R6307	3D	2A	U6315D	4K	2A	U6356A	2S	2C
J6370	1C	2C	R6308	3D	2A	U6315	1S	2A	U6356B	4S	2C
J6380	5E	1C	R6325	5D	2B	U6320	1P	1B	U6356C	4S	2C
J6380	5N	1C	R6330	2S	1C	U6320	3L	1B	U6356D	2P	2C
J6385	5D	2C	R6336	4P	2C	U6325	1S	2B	U6356	2S	2C
J6385	5F	2C	R6340	4S	2C	U6325	2F	2B			
			R6350	2P	1C	U6330	1E	1B			
L6354	2P	2C				U6330	2S	1B			

ASSEMBLY A33

CIRCUIT NUMBER	SCHEM LOCATION	BOARD LOCATION	CIRCUIT NUMBER	SCHEM LOCATION	BOARD LOCATION	CIRCUIT NUMBER	SCHEM LOCATION	BOARD LOCATION	CIRCUIT NUMBER	SCHEM LOCATION	BOARD LOCATION
C6410	9E	3B	R6402	7D	3A	U6405C	7K	3A	U6425	10G	4B
C6440	9F	4C	R6403	6D	3A	U6405D	7K	3A	U6425	9J	4B
			R6404	7D	4A	U6405	10G	3A	U6430	10G	3C
J6400	6C	4A	R6405	8D	4A	U6409A	7J	4A	U6430	8H	3C
			R6406	6D	4A	U6409B	7J	4A	U6435A	7M	4C
P6380	5E	4C	R6407	7D	4A	U6409C	8H	4A	U6435B	7N	4C
P6380	5N	4C	R6408	7D	4A	U6409D	8J	4A	U6435C	6N	4C
P6385	5D	3C	R6432	10J	4C	U6409	10G	4A	U6435D	6N	4C
P6385	5F	3C	R6443	5E	4C	U6415	10F	4B	U6435	10G	4C
						U6415	8L	4B			
R6400	7D	3A	U6405A	6K	3A	U6420	10G	3B			
R6401	7D	4A	U6405B	7K	3A	U6420	5G	3B			

CHASSIS MOUNTED PARTS

CIRCUIT NUMBER	SCHEM LOCATION	BOARD LOCATION	CIRCUIT NUMBER	SCHEM LOCATION	BOARD LOCATION	CIRCUIT NUMBER	SCHEM LOCATION	BOARD LOCATION	CIRCUIT NUMBER	SCHEM LOCATION	BOARD LOCATION
J2732	1B	CHASSIS	P6304	4C	CHASSIS	P6400	6C	CHASSIS	P6408	7C	CHASSIS
			P6305	4C	CHASSIS	P6401	8C	CHASSIS	P6409	7C	CHASSIS
P2732	1B	CHASSIS	P6306	4C	CHASSIS	P6402	8C	CHASSIS	P6410	6C	CHASSIS
P5990	1A	CHASSIS	P6307	4C	CHASSIS	P6403	8C	CHASSIS			
P6300	3C	CHASSIS	P6308	4C	CHASSIS	P6404	7C	CHASSIS	W5990	1B	CHASSIS
P6301	3C	CHASSIS	P6309	4C	CHASSIS	P6405	7C	CHASSIS	W6300	5C	CHASSIS
P6302	3C	CHASSIS	P6310	5C	CHASSIS	P6406	7C	CHASSIS	W6370	2C	CHASSIS
P6303	3C	CHASSIS	P6370	1C	CHASSIS	P6407	7C	CHASSIS	W6400	8C	CHASSIS

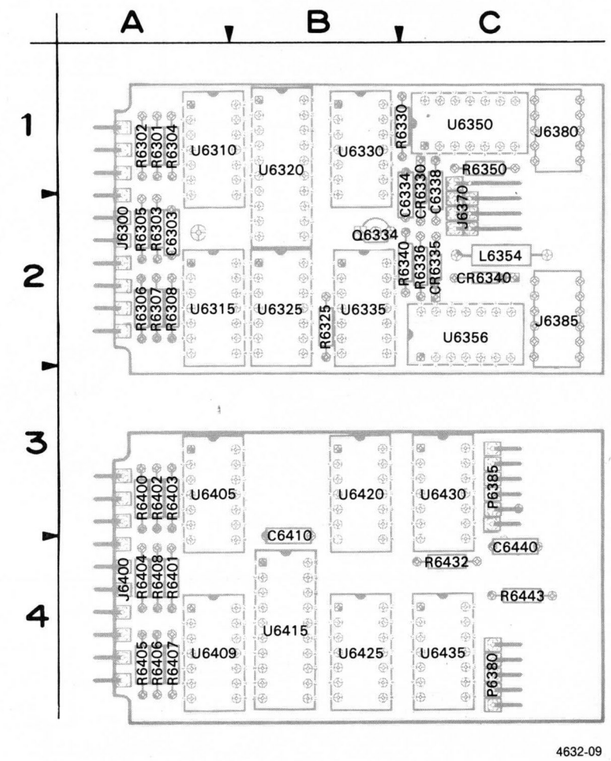

Figure 5. A32 - Word Recognizer board (top), and A33 - Word Recognizer board (bottom).

Static Sensitive Devices
See Maintenance Section

COMPONENT NUMBER EXAMPLE

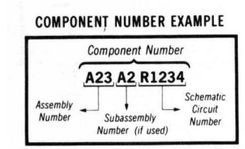

Chassis-mounted components have no Assembly Number prefix—see end of Replaceable Electrical Parts List.