INSTRUCTION MANUAL

Serial Number _____

TYPE 11B2A
TIME BASE PLUG-IN

Tektronix, Inc.
S.W. Millikan Way ● P. O. Box 500 ● Beaverton, Oregon 97005 ● Phone 644-0161 ● Cables: Tektronix

070-0640-00

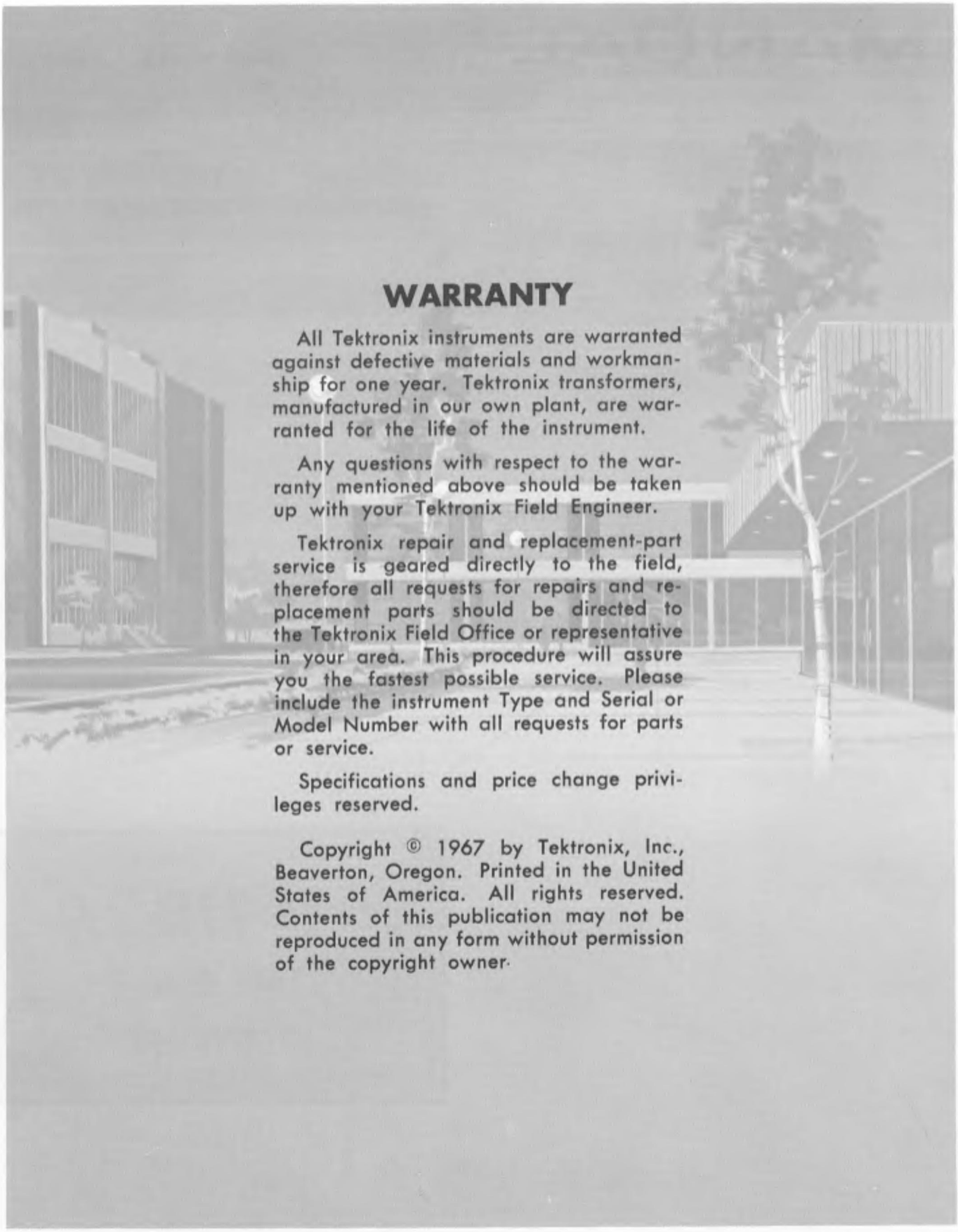

WARRANTY

All Tektronix instruments are warranted against defective materials and workmanship for one year. Tektronix transformers, manufactured in our own plant, are warranted for the life of the instrument.

Any questions with respect to the warranty mentioned above should be taken up with your Tektronix Field Engineer.

Tektronix repair and replacement-part service is geared directly to the field, therefore all requests for repairs and replacement parts should be directed to the Tektronix Field Office or representative in your area. This procedure will assure you the fastest possible service. Please include the instrument Type and Serial or Model Number with all requests for parts or service.

Specifications and price change privileges reserved.

CONTENTS

Section 1	Characteristics
Section 2	Operating Instructions
Section 3	Circuit Description
Section 4	Maintenance
Section 5	Performance Check
Section 6	Calibration
	Abbreviations and Symbols
	Parts Ordering Information
Section 7	Electrical Parts List
	Mechanical Parts List Information
Section 8	Mechanical Parts List
Section 9	Diagrams
	Mechanical Parts List Illustrations

Abbreviations and symbols used in this manual are based on or taken directly from IEEE Standard 260 "Standard Symbols for Units", MIL-STD-12B and other standards of the electronics industry. Change information, if any, is located at the rear of this manual.

Fig. 1-1. Type 11B2A Time Base plug-in unit.

SECTION 1
CHARACTERISTICS

Introduction

The Tektronix Type 11B2A Time Base plug-in unit provides calibrated sweep rate capabilities from five seconds to 0.1 microsecond/division for Tektronix 647-series oscilloscopes. A ×10 magnifier allows each sweep rate to be increased 10 times to provide a maximum sweep rate of 10 nanoseconds/division in the .1 μSEC position. The delayed sweep feature allows the B sweep to be delayed a selected amount from the start of A sweep to provide accurate relative-time measurements. X-Y measurements can be made by applying the external horizontal signal to the EXT INPUT connector (HORIZ DISPLAY switch set to EXT INPUT).

The trigger circuits of the Type 11B2A provide stable triggering over the full range of vertical frequency response. Separate trigger controls are provided to select the desired triggering for A and B sweeps. One of four trigger modes can be selected for A sweep; free run, automatic, normal or single sweep.

The electrical characteristics which follow are divided into two categories. Characteristics listed in the Performance Requirement column are checked in the Performance Check and Calibration sections of this manual. Items listed in the Supplemental Information column are provided for reference use and do not directly reflect the measurement capabilities of this instrument. The Performance Check procedure given in Section 5 of this manual provides a convenient method of checking the Performance Requirements listed in this section. The following characteristics apply over a calibration interval of 1000 hours at an ambient temperature range of −30°C to +65°C, except as otherwise indicated. Warm-up time for given accuracy is 20 minutes.

ELECTRICAL CHARACTERISTICS
Triggering (A and B Sweep)

Characteristic	Performance Requirement	Supplemental Information
Source	Internal from vertical plug-in unit. Internal from AC power source (A only). External from signal applied to TRIG IN connector. External signal applied to TRIG IN connector attenuated 10 times (A only).	
Coupling	AC AC low-frequency reject (A only) DC	
Polarity (slope)	Sweep can be triggered from positive-going or negative-going portion of trigger signal	
Trigger Mode (A sweep only)	Free run Automatic Normal Single sweep	Selected by A TRIG MODE switch
Internal Trigger Sensitivity-A sweep only (also see Fig. 1-2) AC	0.3 centimeter of deflection, minimum, 60 Hz to 20 MHz; increasing to 2 centimeters at 100 MHz	Typical lower −3 dB point, 16 Hz
AC LF REJ	0.3 centimeter of deflection, minimum, 50 kHz to 20 MHz; increasing to 2 centimeters at 100 MHz	Typical lower −3 dB point, 16 kHz
DC	0.3 centimeter of deflection, minimum, DC to 20 MHz; increasing to 2 centimeters at 100 MHz	
External Trigger Sensitivity-A sweep only (also see Fig. 1-3) AC	125 millivolts minimum, 60 Hz to 20 MHz; increasing to 250 millivolts at 100 MHz	Typical lower −3 dB point, 16 Hz
AC LF REJ	125 millivolts minimum, 50 kHz to 20 MHz; increasing to 250 millivolts at 100 MHz	Typical lower −3 dB point, 16 kHz

ELECTRICAL CHARACTERISTICS *(cont)*

Characteristic	Performance Requirement	Supplemental Information
DC	125 millivolts minimum, DC to 20 MHz; increasing to 250 millivolts at 100 MHz	
Internal Trigger Sensitivity-B sweep only (also see Fig. 1-2) AC	0.5 centimeter of deflection minimum, 60 Hz to 20 MHz; increasing to 3 centimeters at 100 MHz	Typical lower —3 dB point, 16 Hz
DC	0.5 centimeter of deflection minimum, DC to 20 MHz; increasing to 3 centimeters at 100 MHz	
External Trigger Sensitivity-B sweep only (also see Fig. 1-3) AC	200 millivolts minimum, 60 Hz to 20 MHz; increasing to 300 millivolts at 100 MHz	Typical lower —3 dB point, 16 Hz
DC	200 millivolts minimum, DC to 20 MHz; increasing to 300 millivolts at 100 MHz	
Auto Triggering (A Sweep only)	Provides triggering capability for trigger signals above 20 Hz and produces a free-running sweep for lower frequencies or in absence of trigger signal	
Single Sweep (A Sweep only)	Triggering capability same as normal trigger Performance Requirement	Resets manually by front-panel RESET push button. Remote resetting requires a positive-going step or pulse of at least 5 volts with a risetime of 10 μs or faster and a duration of 1.5 μs or greater applied to the connector located on rear panel of the indicator oscilloscope.
External Trigger Input Input RC characteristics		Approximately 1 Megohm paralleled by 20 pF (except in AC LF REJ, A sweep only)
Maximum Input Voltage		500 volts combined DC and peak AC
LEVEL control range (A sweep only) EXT EXT ÷ 10	At least + and —5 volts At least + and —50 volts except AC LF REJ	
LEVEL control range (B sweep only) EXT	At least + and —10 volts	

HORIZONTAL DEFLECTION SYSTEM
A and B Sweep Generator

Sweep Rates A	5 seconds to 0.1 microsecond/centimeter in 25 calibrated steps		Steps in 1-2-5 sequence. A Sweep is main and delaying sweep. B Sweep is delayed sweep
B	5 seconds to 0.1 microsecond/centimeter		
Sweep Accuracy—A and B Sweep	0°C to +40°C	—30° C to +65° C	A VARIABLE and B TIME/CM VARIABLE controls set to CALIB. MAG switch set to OFF
5 SEC to 0.1 SEC/cm	Within 3%	Within +4%, —6%	
50 mSEC to 0.1 μSEC/cm	Within 1.5%	Within 2.5%	
Normal Sweep Linearity	Within 5%	Within 5%	Measured over any two division interval within center eight divisions
Variable Sweep Rate	Uncalibrated sweep rate to 2.5 times, or more, the TIME/CM switch setting		Slowest sweep rate 12.5 seconds/division, or slower, in the 5 SEC position.

HORIZONTAL DEFLECTION SYSTEM *(cont)*

Characteristic	Performance Requirement		Supplemental Information
Sweep Length			
A sweep	10.5 to 11.0 centimeters		
B sweep	10.2 to 11.0 centimeters		
Sweep Holdoff—A Sweep 5 SEC to 0.1 mSEC/CM			One time or less, the A TIME/CM switch setting
50 μSEC to 1 μSEC/CM			Two times, or less, the A TIME/CM switch setting
0.5 μSEC to 0.1 μSEC/CM			Two microseconds or less
Sweep Magnifier			
Sweep Magnification	Each sweep rate can be increased 10 times the indicated sweep rate by horizontally expanding the center division of display		Extends fastest sweep rate to 10 nanoseconds/centimeter
Magnified Sweep Accuracy (equivalent magnified sweep rates given	0°C to +40°C	−30°C to +65°C	A VARIABLE and B TIME/CM VARIABLE controls set to CALIB
0.5 second to 10 millisecond/centimeter	Within 4%	Within +5.5%, −7.5%	
5 millisecond to 50 nanoseconds centimeter	Within 2.5%	Within 4%	
20 and 10 nanoseconds/centimeter	Within 3.5%	Within 5%	
Magnified Sweep Linearity	Within 5%	Within 10%	Measured over any two centimeter interval within center eight centimeters. Exclude first 100 nanoseconds and last 60 nanoseconds of total magnified sweep length
Normal/Magnified Registration (5 SEC to 1 μSEC/CM)	±0.2 centimeter or less trace shift from center screen when switching MAG switch from ×10 to OFF		
Sweep Delay			
Calibrated Delay Time	Continuous from 50 seconds to one microsecond		A VARIABLE control set to CALIB
DELAY TIME MULT Dial Range	0.30 to 10.30		Includes incremental DELAY-TIME MULT linearity. Accuracy of the difference between two DELAY-TIME MULT dial settings is expressed as a percent of 10× the A TIME/CM switch setting.
Delay Time Accuracy 5 SEC to 0.1 SEC/CM	0°C to +40°C	−30°C to +65°C	
	Within 2.5%	Within +3%, −6%	
50 mSEC to 1 μSEC/CM	Within 1%	Within 2%	
Incremental DELAY-TME MULT Linearity	Within 0.15%	Within 0.2%	
Delay Time Jitter	One part or less in 20,000 of the available delay interval (10 times the A TIME/CM switch setting)		Equal to 0.5 centimeter or less with A TIME/CM switch set to 1 mSEC and B TIME/CM switch set to 1 μSEC
External Horizontal Operation			
Deflection Factor (X-axis only) No magnification	1 volt/centimeter		10-series volts/cm switch(s) controls the Y-axis deflection.
With 10 times magnification	0.1 volt/centimeter		
Accuracy	±10%		

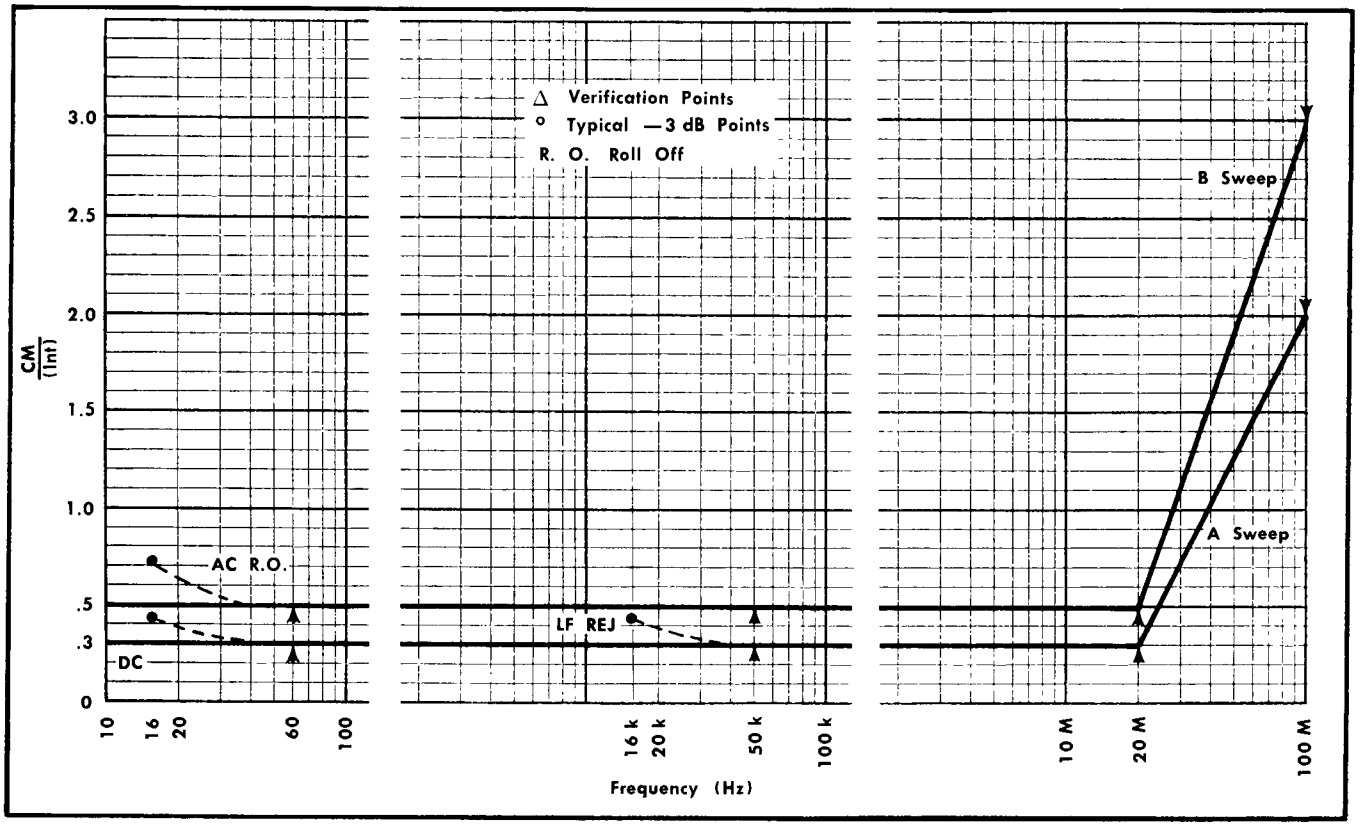

Fig. 1-2. A and B sweep internal trigger coupling and sensitivity.

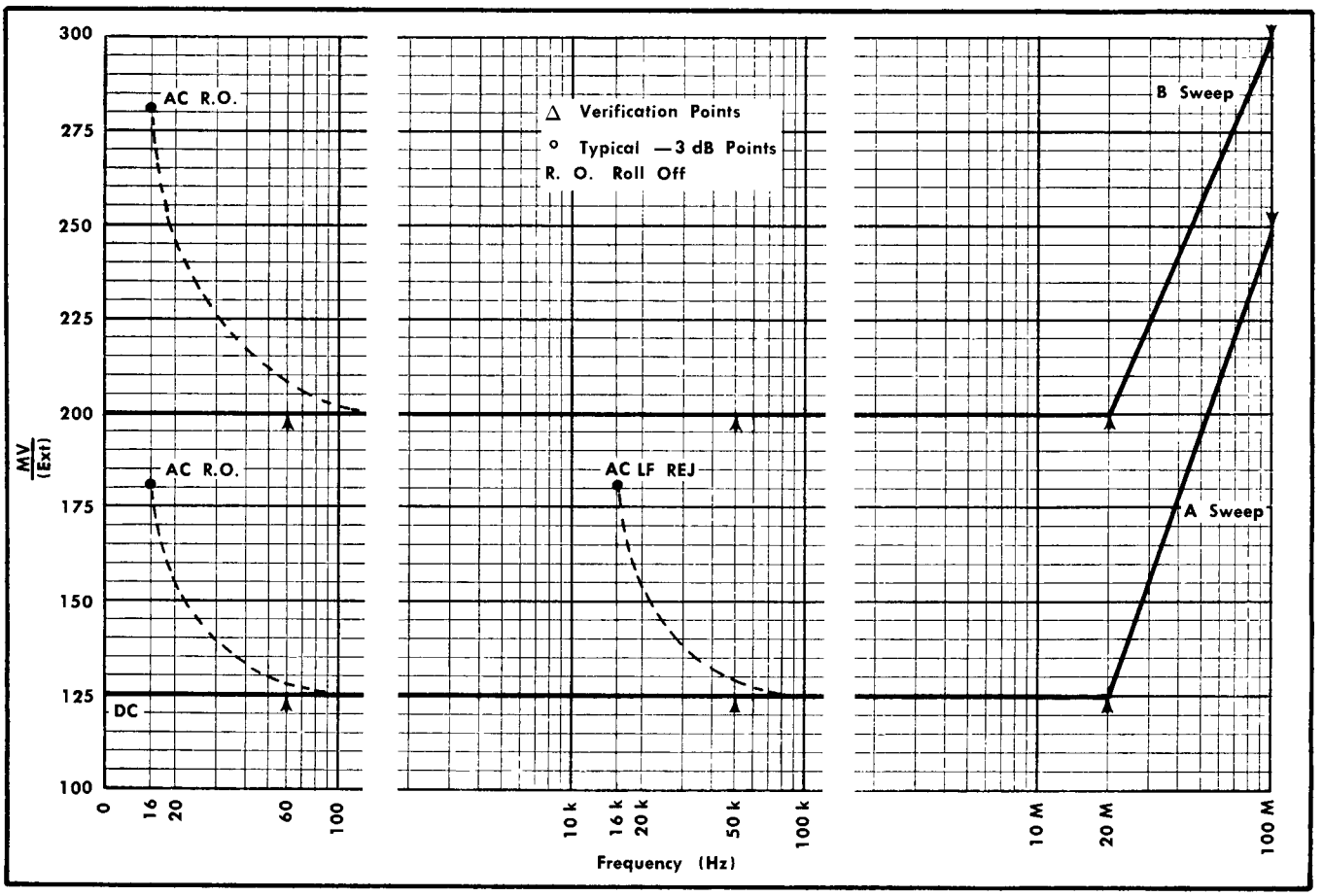

Fig. 1-3. A and B sweep external trigger coupling and sensitivity.

Bandwidth	DC to 3 MHz or greater at —3 dB point	B COUPLING switch effects the lower 3 dB point; see External Trigger Sensitivity (B sweep only) characteristic.
Input RC Characteristics		1 megohm paralleled by 30 pF

Output Signals

Characteristic	Performance Requirement	Supplemental Information
A and B Sweep		
Waveshape	Sawtooth pulse	
Amplitude	10 volts peak, ±10%	
Polarity	Positive-going with baseline near zero volts	
Duration	Same duration as the respective sweep	
Output resistance		Approximately 750 ohms
A and B + Gates		
Waveshape	Rectangular pulse	
Amplitude	15 volts peak, ±10%	
Polarity	Positive going with baseline at about —0.7 volts	
Duration	Same duration as the respective sweep	
Output resistance		Approximately 1.6 kilohm

ENVIRONMENTAL CHARACTERISTICS

The following environmental test limits apply when tested in accordance with the recommended test procedure. This instrument will meet the electrical performance requirements given in this section following environmental test. Complete details on environmental test procedures, including failure criteria, etc., may be obtained from Tektronix, Inc. Contact your local Tektronix Field Office or representative.

Characteristic	Performance Requirement	Supplemental Information
Temperature		
Operating	—30°C to +65°C	
Non-operating	—55°C to +75°C	
Altitude		
Operating	15,000 feet maximum	Derate maximum operating temperature by 1°C/1000 feet change in altitude above 5000 feet.
Non-operating	50,000 feet maximum	May be tested during non-operating temperature test
Humidity Non-Operating	Five cycles (120 hours) of MIL-STD-202B, Method 106A	Exclude freezing and vibration
Vibration Operating and non-operating	15 minutes vibration along each of the three major axes at a total displacement of 0.025-inch peak to peak (4g at 55 c/s) with frequency varied from 10-55-10 c/s in one-minute cycles. Hold at 55 c/s for three minutes on each axis	Installed in indicator oscilloscope which is secured to vibration platform during test. Total vibration time, about 55 minutes.
Shock Operating and non-operating	Two shocks of 20 g, one-half sine, 11 millisecond duration each direction along each major axis	Guillotine-type chocks. Installed in indicator oscilloscope. Total of 12 shocks.
Transportation	Meets National Safe Transit type of test when correctly packaged	
Package vibration	One hour vibration slightly in excess of 1 g	Package should just leave vibration surface
Package drop	30 inch drop on any corner, edge or flat surface	

STANDARD ACCESSORIES

Standard accessories supplied with the Type 11B2A are listed on the last pullout page at the rear of this manual. For optional accessories available for use with this instrument, see the current Tektronix, Inc. catalog.

NOTES

SECTION 2
OPERATING INSTRUCTIONS

General

The Type 11B2A Time Base plug-in unit operates with the indicator oscilloscope and a 10-series vertical plug-in unit to form a complete oscilloscope system. To effectively use the Type 11B2A, the operation and capabilities of the instrument should be known. This section describes the operation of the front-panel controls and connectors, gives first time and general operating information and lists some basic applications for this instrument.

Installation

The Type 11B2A is designed to operate in the horizontal plug-in compartment of Tektronix 647-series oscilloscopes. The Type 11B2A will not operate correctly if installed in the vertical plug-in compartment. To install the Type 11B2A into the plug-in compartment, push it in as far as possible so it is seated against the front panel of the indicator oscilloscope. To remove the plug-in, pull the release bar, grasp the plug-in behind the front panel and pull it partially out of the compartment. Then take hold of the plug-in by the support rods to remove it from the oscilloscope.

Even though the horizontal gain of the indicator oscilloscope is standardized to minimize adjustment when inserting plug-ins, the sweep calibration of the Type 11B2A should be checked when it is inserted into the indicator oscilloscope to verify measurement accuracy. The procedure for checking the unit is given under Sweep Calibration Check in this section.

FRONT-PANEL CONTROLS AND CONNECTORS

Introduction

All controls and connectors required for the operation of the Type 11B2A are located on the front panel of the unit (see Fig. 2-1). To make full use of the capabilities of this instrument, the operator should be familiar with the function and use of each of these controls and connectors. A brief description of the function or operation of the front-panel controls and connectors follows. More detailed information is given under General Operating Information.

A Trigger Controls

TRIG MODE — Determines the manner in which the A Sweep is initiated.

FREE RUN: Provides recurrent sweep operation at the sweep rate selected by the A TIME/CM switch. Sweep cannot be triggered in this mode of operation.

AUTO: Sweep initiated by the applied trigger signal using the A trigger controls when the repetition rate of the trigger signal is above 20 hertz. For lower reptition rates or when there is no trigger signal, the sweep free runs at the sweep rate selected by the A TIME/CM switch to produce a bright reference trace.

NORM: Sweep initiated by the applied trigger signal using the A trigger controls. No trace when there is no trigger signal.

SINGLE SWEEP: After a sweep is displayed, further sweeps cannot be presented until the RESET button is pressed (may also be reset remotely through rear panel connector on indicator oscilloscope). Display is triggered as for NORM operation using the A trigger controls.

RESET — When light is on, a display will be presented when a trigger is received (SINGLE SWEEP mode). After the sweep is completed the RESET button must be pressed again before another sweep can be displayed.

SLOPE — Selects slope of trigger signal which initiates the A sweep.

+: Sweep can be triggered from positive-going portion of trigger signal.

—: Sweep can be triggered from negative-going portion of trigger signal.

TRIG LEVEL — Selects amplitude point on trigger signal where A sweep is triggered.

HF STABILITY — Decreases display jitter for trigger signals above about 10 megahertz. Has negligible effect at lower repetition rates.

COUPLING — Determines method of coupling trigger signal to A trigger circuit.

AC: Rejects DC and attenuates signals below about 30 hertz.

AC LF REJ: Rejects DC and attenuates signals below about 50 kHz.

DC: Accepts AC and DC trigger signals to permit triggering from DC to 100 MHz or higher.

SOURCE — Selects the source of the A trigger signal.

INT: Internal triggering provided from vertical plug-in unit.

LINE: Sweep triggered at line frequency.

EXT: Sweep triggered from signal applied to the A TRIG IN connector.

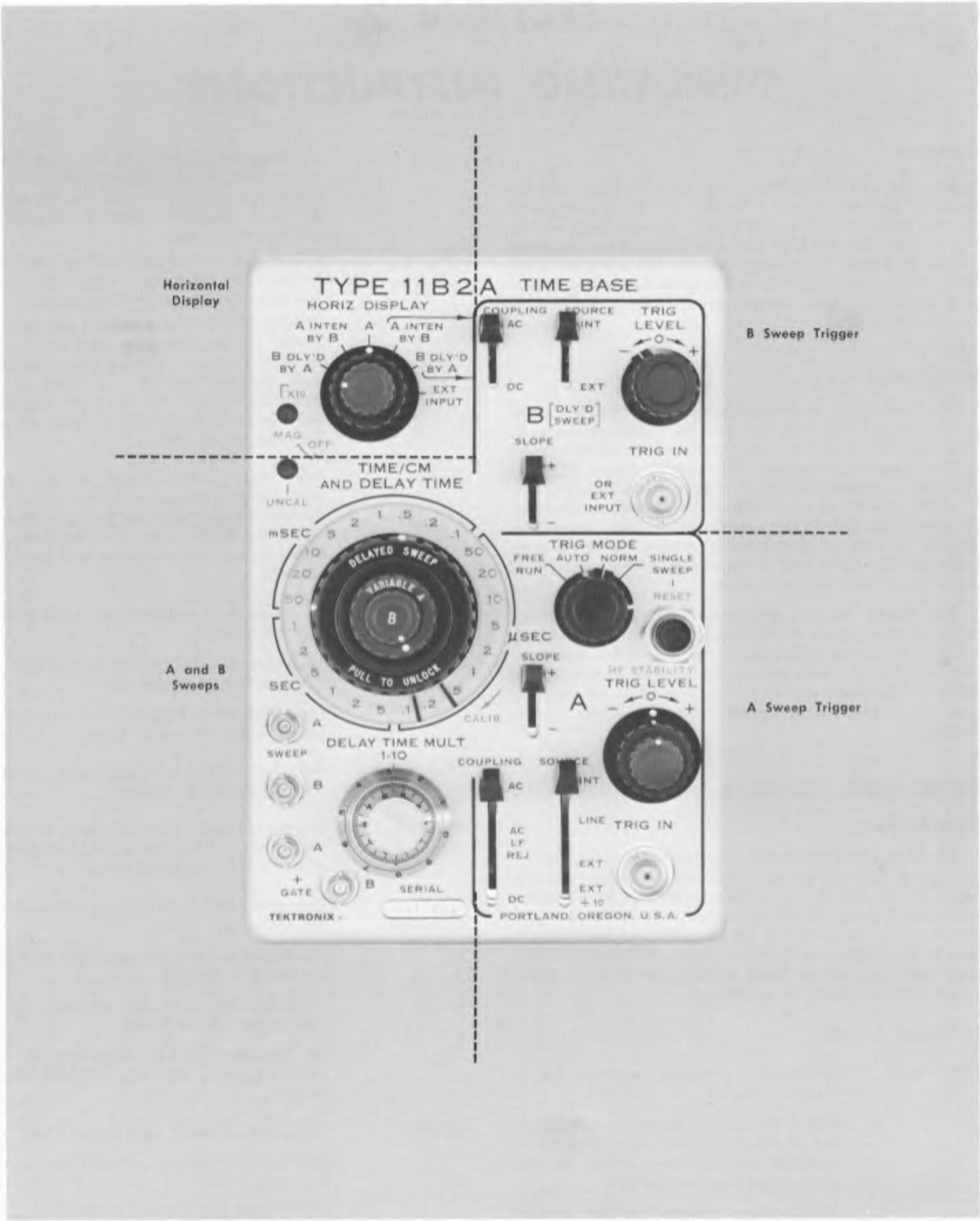

Fig. 2-1. Front-panel controls and connectors of the Type 11B2A.

EXT÷10: Trigger signal applied to the A TRIG IN connector attenuated 10 times.

TRIG IN — Input connector for A external trigger signal.

B Trigger (Dly'd Sweep)

NOTE

The B trigger controls affect the operation of the B sweep only when the HORIZ DISPLAY switch is set to either of the delayed sweep positions which have arrows pointing to the B trigger block.

COUPLING — Determines method of coupling trigger signal to B trigger circuit.

AC: Rejects DC and attenuates signals below about 30 Hz.

DC: Accepts AC and DC trigger signals to permit triggering from DC to 100 MHz or higher.

SOURCE — Selects the source of the B trigger signal.

INT: Internal triggering provided from vertical plug-in unit.

EXT: Sweep triggered from signal applied to the B TRIG IN connector.

TRIG LEVEL — Selects amplitude point on trigger signal where B sweep is triggered.

SLOPE — Selects slope of trigger signal which initiates the B sweep.

+: Sweep can be triggered from positive-going portion of trigger signal.

—: Sweep can be triggered from negative-going portion of trigger signal.

TRIG IN (OR EXT INPUT) — Input connector for B external trigger signal. When HORIZ DISPLAY switch is set to EXT INPUT, this connector serves as the input connector for the external horizontal deflection signal.

A and B Sweep

UNCAL — Light indicates that either the VARIABLE A or B control is not in the CALIB position.

TIME/CM AND DELAY TIME — A TIME/CM switch (clear plastic inner flange) selects the sweep rate of the A sweep circuit for A sweep only operation and selects the basic delay time (to be multiplied by DELAY-TIME MULT dial setting) for delayed sweep operation. B TIME/CM (DELAYED SWEEP) switch selects the sweep rate of the B sweep circuit for delayed sweep operation only. VARIABLE controls must be in CALIB position for calibrated sweep rate.

VARIABLE A — Provides continuously variable A sweep rate to at least 2.5 times setting of the A TIME/CM switch. A sweep rate is calibrated when control is set fully clockwise to CALIB.

VARIABLE B — Provides continuously variable B sweep rate to at least 2.5 times setting of the B TIME/CM switch. B sweep rate is calibrated when control is set fully clockwise to CALIB.

SWEEP A — Output connector providing a sample of the sawtooth signal produced by the A Sweep Generator.

SWEEP B — Output connector providing a sample of the sawtooth signal produced by the B Sweep Generator.

+ GATE A — Output connector providing a rectangular pulse coincident with the A sweep.

+ GATE B — Output connector providing a rectangular pulse coincident with the B sweep.

DELAY-TIME MULT — Provides variable sweep delay between 0.30 and 10.30 times the delay time indicated by the A TIME/CM switch.

Horizontal Display

HORIZ DISPLAY — Selects horizontal mode of operation. B DLY'D BY A (not triggered; to left of A on panel): Sweep rate determined by the B TIME/CM switch. Delayed sweep (B) produced immediately following the delay time determined by the setting of the DELAY TIME (A TIME/CM) switch and the DELAY-TIME MULT dial.

A INTEN BY B (not triggered; to left of A on panel); Sweep rate determined by A TIME/CM switch. An intensified portion, length of which is about 10 times setting of B TIME/CM switch, appears on the display immediately following the centimeters of delay shown on the DELAY-TIME MULT dial. This position provides a check of the duration and position of the delayed sweep (B) with respect to the delaying sweep (A).

A: Horizontal deflection provided by A sweep. B sweep is inoperative.

A INTEN BY B (triggered): Same as previous A INTEN BY B position except that the intensified portion appears on the display only when the delayed sweep (B) is triggered following the centimeters of delay shown by the DELAY-TIME MULT dial.

B DLY'D BY A (triggered): Same as previous B DLY'D BY A position except that the delayed sweep (B) is produced when it is triggered following the delay time

TYPE 11B2A CONTROL SET-UP CHART

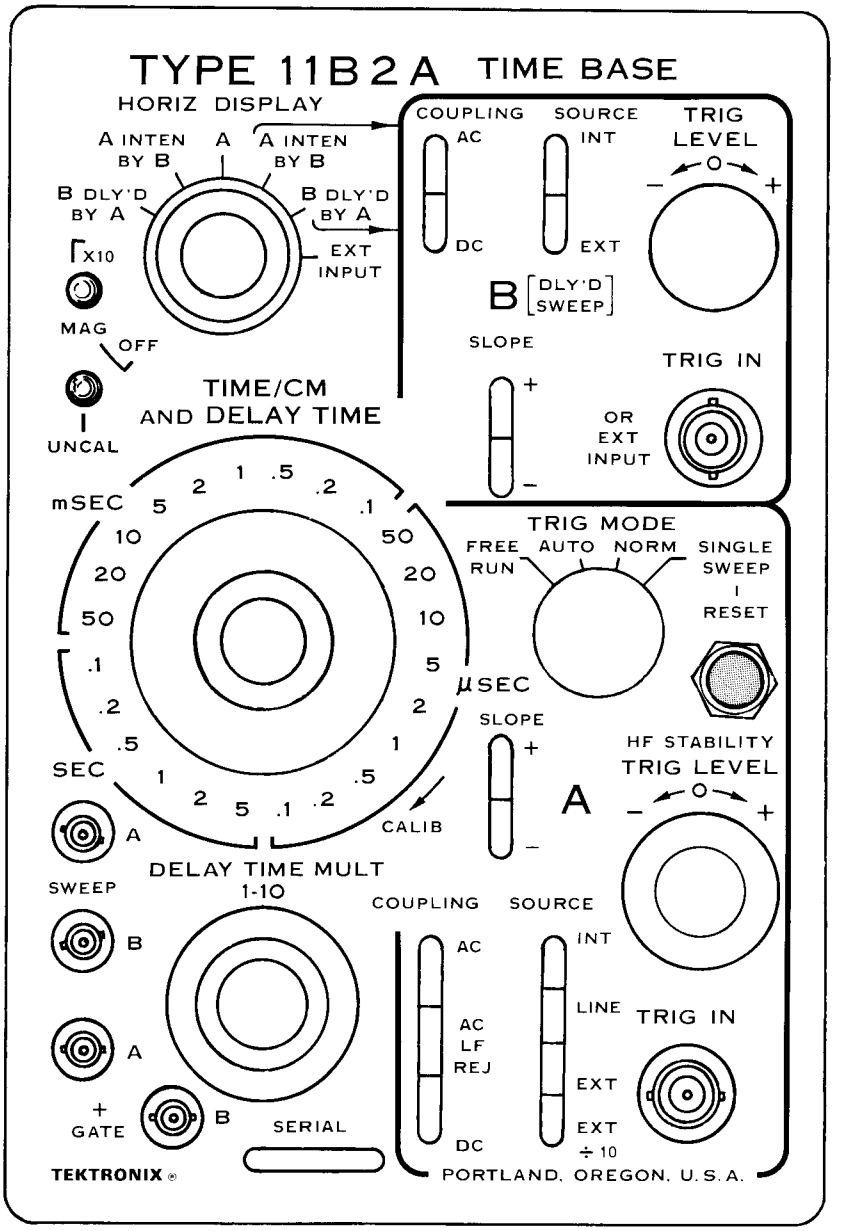

Fig. 2-2. Type 11B2A test-set-up chart.

determined by the DELAY TIME switch and the DELAY-TIME MULTI dial.

EXT INPUT: Horizontal deflection provided by signal connected to the EXT INPUT connector when the B trigger SOURCE switch is set to EXT.

MAG (×10) Increases sweep rate to ten times setting of the TIME/CM switch by horizontally expanding the center one division of the display. Light indicates when the magnifier is on.

FIRST-TIME OPERATION

General

The following steps demonstrate the basic functions of the controls and connectors of the Type 11B2A and demonstrate the basic operation of this unit. It is recommended that this procedure be followed completely for familiarization with the instrument. Operation of the indicator oscilloscope and vertical plug-in unit is described in the instruction manuals for these units. The first eight steps of this procedure describe the method of setting up the system for correct time measurements. These steps may be used to check the unit when it is installed in an oscilloscope to insure accurate measurements.

Setup Information

1. With the indicator oscilloscope power turned off, insert the Type 11B2A into the horizontal plug-in compartment.

2. Insert a 10-series vertical unit into the left plug-in compartment.

3. Set the oscilloscope intensity control counterclockwise.

4. Connect the oscilloscope to a power source which meets its voltage and frequency requirements.

5. Turn on the oscilloscope power switch and allow about five minutes warm up.

6. Connect the indicator oscilloscope calibrator output to the input of the vertical unit with a BNC cable.

7. Set the front-panel controls as follows:

Type 11B2A

TRIG MODE	AUTO
A SLOPE	+
A TRIG LEVEL	Midrange
A COUPLING	AC
A SOURCE	INT
B COUPLING	AC
B SOURCE	INT
B TRIG LEVEL	Midrange
B SLOPE	+
HORIZ DISPLAY	A
MAG	OFF
TIME/CM AND DELAY TIME	.5 mSEC
VARIABLE A	CALIB
VARIABLE B	CALIB
DELAY TIME MULT	0.03

Vertical Unit (both channels if applicable)

Input Coupling	AC
Volts/Cm	5
Variable (Volts/Cm)	Cal
Position	Midrange
Invert	Pushed in
Trigger	Norm
Mode	Ch 1

Indicator Oscilloscope

Calibrator	10 volts
Intensity	Adjust for visible display
Focus	Adjust for optimum display
Astigmatism	Adjust for optimum display
Scale Illum	As desired
Position (horizontal)	Midrange

8. Check the display for five complete cycles. Display of a greater or lesser number of cycles indicates incorrect horizontal timing. Adjustment procedure is given in the Calibration section.

Triggering

9. Rotate the A TRIG LEVEL control throughout its range. The display free runs at the extremes of rotation.

10. Set the TRIG MODE switch to NORM. Again rotate the A TRIG LEVEL control throughout its range. A display is presented only when it is correctly triggered. Return the TRIG MODE switch to AUTO.

11. Set the A SLOPE switch to —. The trace starts on the negative-going part of the square wave. Return the switch to +; the trace starts with the positive-going part of the square wave.

12. Set the A COUPLING switch to DC. Turn the vertical unit position control until the display becomes unstable (only part of square wave visible). Return the A COUPLING switch to AC; the display is again stable. Since changing trace position changes DC level, this shows that changes in the DC level affect DC trigger coupling. Return the display to the center of the screen.

13. Connect the Calibrator signal to both the vertical unit input connector and the A TRIG IN connector. Set the A SOURCE switch to EXT. Operation of the LEVEL, SLOPE, and COUPLING controls for external triggering are the same as described in steps 9 through 12.

14. Set the A SOURCE switch to EXT ÷ 10. Operation is the same as for EXT. Note that the A TRIG LEVEL control has less range in this position, indicating trigger signal attenuation. Return the A SOURCE switch to INT.

15. Operation of the B Triggering controls is similar to A Triggering (when the HORIZ DISPLAY switch is set to the triggered A INTEN BY B or B DYL'D BY A positions).

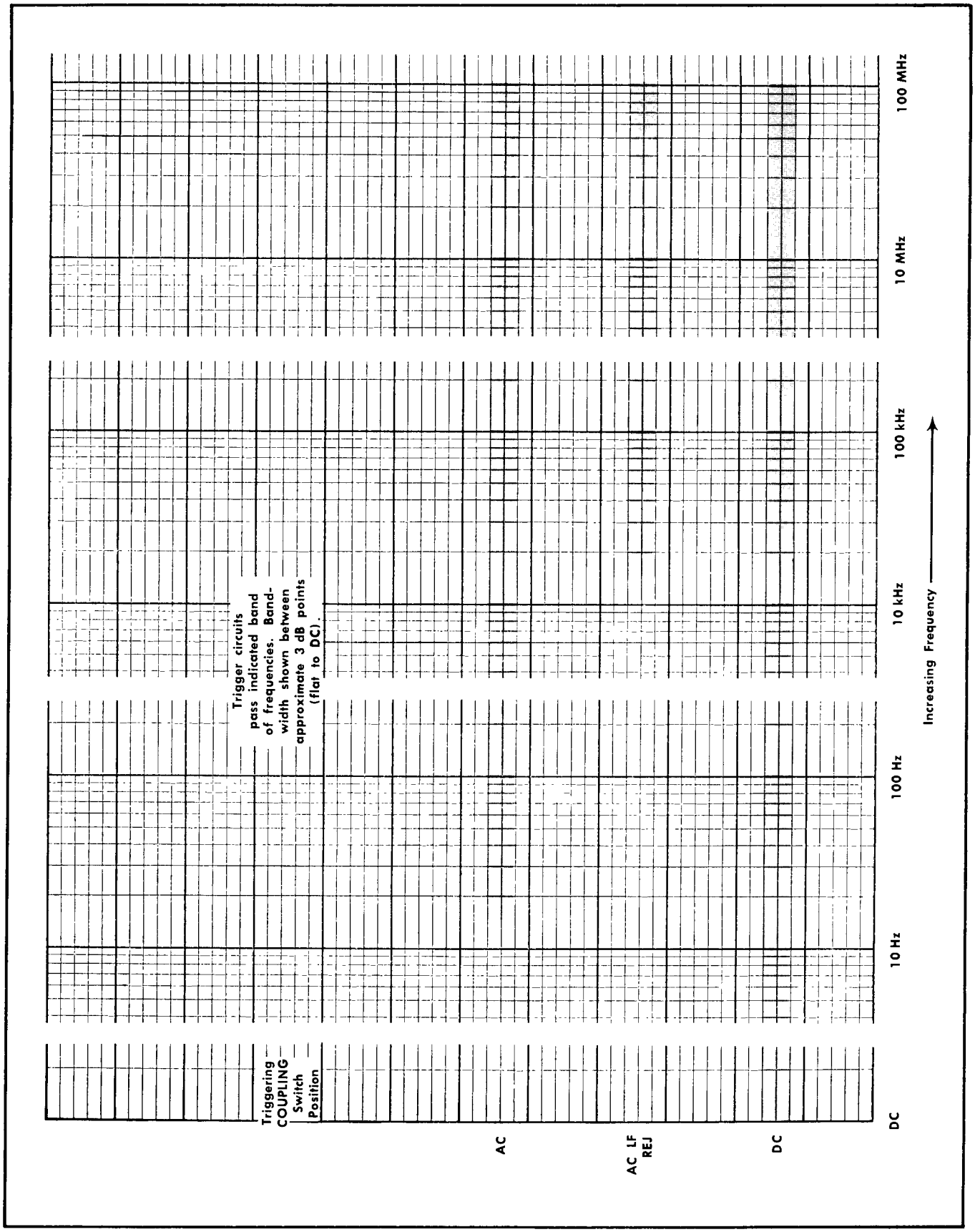

Fig. 2-3. Frequency range of each position of the Triggering COUPLING switches.

Normal and Magnified Sweep

16. Set the TIME/CM switch to 5 mSEC and the MAG switch to ×10. The display should be similar to that obtained with the TIME/CM switch set to .5 mSEC and the MAG switch to OFF. Return the TIME/CM switch to .5 mSEC and the MAG switch to OFF.

17. Turn the VARIABLE A control throughout its range. Note that the UNCAL light comes on when the VARIABLE A control is moved from the CALIB position (fully clockwise). The sweep rate is slower by about 2.5 times in the fully counterclockwise position as indicated by an additional number of cycles displayed on the CRT.

Delayed Sweep

18. Pull the B TIME/CM-DELAYED SWEEP knob out and turn it to 50 μSEC (A TIME/CM-DELAY TIME remains at .5 mSEC). Set the HORIZ DISPLAY switch to A INTEN BY B (not triggered). An intensified portion, about one division in length, should be shown near the start of the trace. Rotate the DELAY TIME MULT dial throughout its range; the intensified portion should move along the display.

19. Set the HORIZ DISPLAY switch to the triggered A INTEN BY B position (to right of A position). Again rotate the DELAY TIME MULT dial throughout its range and note that the intensified portion appears to jump between positive slopes of the display. Set the B SLOPE switch to —; the intensified portion begins on the negative slope. Rotate the B LEVEL control; the intensified portion of the display disappears when the B LEVEL control is out of the triggerable range. Return the B LEVEL control to 0.

20. Set the HORIZ DISPLAY switch to B DLY'D BY A (triggered). Rotate the DELAY TIME MULT dial through its range; about one-half cycle of the waveform should be displayed on the screen (leading edge visible only at high intensity control setting). The display remains stable on the screen, indicating that the B sweep is triggered.

21. Set the HORIZ DISPLAY switch to B DLY'D BY A (not triggered). Rotate the DELAY TIME MULT dial throughout its range; the display moves continuously across the screen as the control is rotated.

Single Sweep

22. Set the TRIG MODE switch to SINGLE SWEEP. Remove the Calibrator signal from the vertical unit input connector. Press the RESET button; the RESET light should come on and remain on. Re-apply the signal to the vertical unit input connector; a single trace should be presented and the RESET light should go out. Return the TRIG MODE switch to AUTO.

External Horizontal

23. Connect a 5 volt calibrator signal to the vertical unit input connector and the B TRIG IN connector. Set the B SOURCE switch to EXT and the HORIZ DISPLAY switch to EXT INPUT. Set the vertical unit volts/cm switch to 1.

24. Increase the intensity control setting until two dots are displayed diagonally. The dots should be five divisions apart vertically and about four and one-half divisions apart horizontally.

25. This completes the basic operating procedure for the Type 11B2A. Instrument operation not explained here, or operations which need further explanation are discussed under General Operating Information.

CONTROL SETUP CHART

Fig. 2-2 shows the front panel of the Type 11B2A. This chart can be reproduced and used as a test-setup record for special measurements, applications or prodedures; or it may be used as a training aid for familiarization with this instrument.

GENERAL OPERATING INFORMATION

Trigger Source

INT (A and B). For most applications, the sweep can be triggered internally. In the INT position of the SOURCE switch, the trigger signal is obtained from the vertical plug-in unit.

LINE (A only). The LINE position of the A SOURCE switch connects a sample of the power-line frequency to the Trigger Generator. Line triggering is useful when the input signal is time-related to the line frequency. It is also useful for providing a stable display of a line-frequency component in a complex waveform.

EXT (A and B). An external signal connected to the TRIG IN connector can be used to trigger the sweep in the EXT position of the SOURCE switch. The external signal must be time-related to the displayed signal for a stable display. An external trigger signal can be used to provide a triggered display when the internal signal is too low in amplitude for correct triggering, or contains signal components on which it is not desired to trigger. It is also useful when signal tracing in amplifiers, phase-shift networks, wave-shaping circuits, etc. The signal from a single point in the circuit can be connected to the TRIG IN connector through a signal probe or cable. The sweep is then triggered by the same signal at all times and allows amplitude, time relationship or waveshape changes of signals at various points in the circuit to be examined without resetting the trigger controls.

EXT ÷ 10 (A only). Operation in the EXT ÷ 10 position is the same as described for EXT except that the external triggering signal is attenuated 10 times. Attenuation of high-amplitude external trigger signals is desirable to broaden the range of the A LEVEL control. When the A COUPLING switch is set to AC LF REJ, attenuation is about 100:1.

Trigger Coupling

Three methods of coupling the trigger signal to the trigger circuits can be selected with the COUPLING switches. Each position permits selection or rejection of the frequency components of the trigger signal which will trigger the sweep. Fig. 2-3 graphically shows the band of frequencies which each position of the coupling switch covers.

AC (A and B). The AC position blocks the DC component of the trigger signal. Signals with low-frequency components below about 60 hertz are attenuated. In general, AC coupling can be used for most applications. However, if the trigger signal contains unwanted components or if the sweep is to be triggered at a low-frequency repetition rate or a DC level, the DC position will provide a better display.

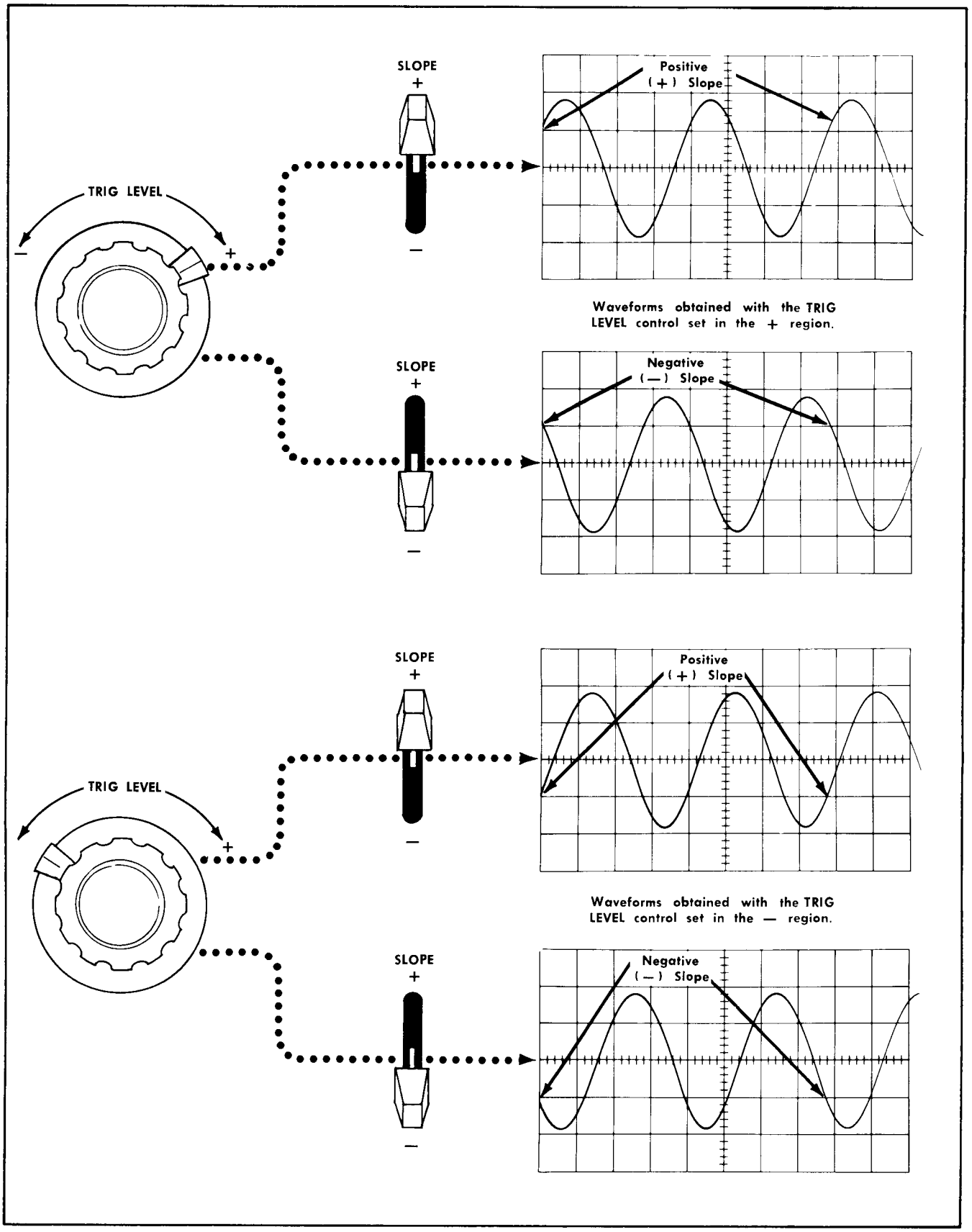

Fig. 2-4. Effects of TRIG LEVEL control and SLOPE switch on displayed waveform.

The triggering point in the AC position depends on the average voltage level of the trigger signal. If the trigger signals occur in a random fashion, the average voltage level will vary, causing the triggering point to vary also. This shift of the triggering point may be enough so it is impossible to maintain a stable display. In such cases, use DC coupling.

AC LF REJ (A only). In the AC LF REJ position, DC is rejected and signals below about 50 kilohertz are attenuated. Therefore, the sweep will be triggered only by the higher-frequency components of the signal. This position is particulary useful for providing stable triggering if the trigger signal contains line-frequency components. Also, for alternate mode operation of a multi-trace vertical unit, the AC LF REJ position provides the best display at fast sweep rates when comparing two unrelated signals.

DC (A and B). DC coupling can be used to provide stable triggering with low-frequency signals which would be attenuated in the AC position, or with low-repetition rate signals. The LEVEL control can be adjusted to provide triggering at the desired DC level on the waveform. When using internal triggering, the settings of the vertical unit position controls affect the DC triggering level.

Trigger Slope

The trigger SLOPE switch determines whether the trigger circuit responds on the positive-going or negative-going portion of the trigger signal. When the SLOPE switch is in the + (positive-going) position, the display starts with the positive-going portion of the waveform; in the — (negative-going) position, the display starts with the negative-going portion of the waveform (see Fig. 2-4). When several cycles of a signal appear in the display, the setting of the SLOPE switch is often unimportant. However, if only a certain portion of a cycle is to be displayed, correct setting of the SLOPE switch is important to provide a display which starts on the desired slope of the input signal.

Trigger Level

The TRIG LEVEL control determines the voltage on the triggering waveform at which the sweep is triggered. When the TRIG LEVEL control is set in the + region, the trigger circuit responds at a positive point on the trigger signal. When the TRIG LEVEL control is set in the — region, the trigger circuit responds at a negative point on the trigger signal. Fig. 2-4 illustrates this effect with different settings of the SLOPE switch.

To set the TRIG LEVEL control, first select the trigger SOURCE, COUPLING and SLOPE. Then set the TRIG LEVEL control to 0 (except for DC coupling). If the display does not start at the desired point, adjust the TRIG LEVEL control for correct triggering. In the DC position of the coupling switch, correct triggering may be obtained at any setting of the TRIG LEVEL control, as determined by the DC level of the trigger signal. To obtain correct triggering for DC, turn the TRIG LEVEL control fully counterclockwise and rotate it clockwise until the display is triggered at the correct DC level.

High-Frequency Stability

The HF STABILITY control (A only) is used to provide a stable display of signals requiring sweep rates of 10, 20 or 50 nanoseconds/division (MAG switch at ×10). If a stable display cannot be obtained using the TRIG LEVEL control (trigger signal must have adequate amplitude), adjust the HF STABILITY control for minimum horizontal jitter. This control has little effect at slower sweep rates.

Trigger Mode

FREE RUN. In the FREE RUN position of the TRIG MODE switch, the sweep free runs independent of any trigger signal. The repetition rate of the free-running sweep is dependent upon the setting of the TIME/CM switch.

AUTO. The AUTO position of the TRIG MODE switch provides a stable display when the LEVEL control is correctly adjusted (see Trigger Level in this section) and a trigger signal is available. However, when the trigger repetition rate is less than about 20 hertz, or in the absence of an adequate trigger signal, the A Sweep Generator free runs (at the repetition rate selected by the TIME/CM switch) to produce a reference trace. When an adequate trigger signal is again applied, the free running condition ends and the A Sweep Generator is triggered to produce a stable display (with correct LEVEL control setting).

NORM. Operation in the NORM position when a trigger signal is applied is the same as in the AUTO position. However, when a trigger signal is not present, the A Sweep Generator remains off and there is no display. This mode provides an indication of an adequate triggering signal as well as the correctness of triggering control settings, since there is no display without proper triggering. Use the NORM mode to display signals with repetition rates below about 20 hertz.

SINGLE SWEEP. When the signal to be displayed is not repetitive or varies in amplitude, shape or time, a conventional repetitive display may produce an unstable presentation. To avoid this, use the single-sweep feature of the Type 11B2A. The SINGLE SWEEP mode can also be used to photograph a non-repetitive signal.

To use the SINGLE SWEEP mode, first make sure the trigger circuit will respond to the event which is to be displayed. Set the TRIG MODE switch to AUTO or NORM and obtain the best possible display in the normal manner (for random signals set the trigger circuit to trigger on a signal which is approximately the same amplitude and frequency as the random signal). Then, set the TRIG MODE switch to SINGLE SWEEP and press the RESET button. When the RESET button is pushed, the next trigger pulse initiates the sweep and a single trace will be presented on the screen. After this sweep is complete, the A Sweep Generator is "locked out" until reset. The RESET light located inside the RESET button lights when the A Sweep Generator circuit has been reset and is ready to produce a sweep; it goes out after the sweep is complete. To prepare the circuit for another single-sweep display, press the RESET button again.

Selecting Sweep Rate

The TIME/CM switch selects calibrated sweep rates for the Sweep Generators. The VARIABLE A and B controls provide continuously variable sweep rates between the settings of the TIME/CM switch. Whenever the UNCAL light is on, the

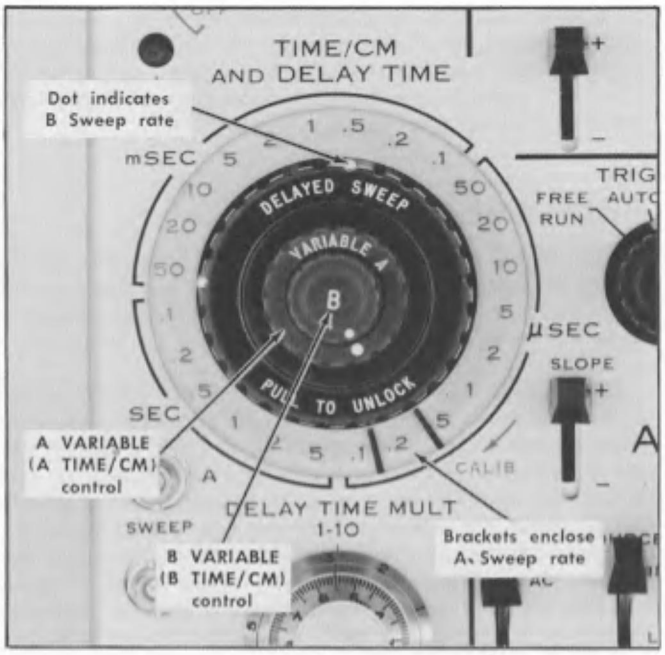

Fig. 2-5. A and B TIME/CM switch.

sweep rate of either A or B Sweep Generator, or both, is uncalibrated. The light is off when the VARIABLE A and B controls are both set to the CALIB position.

The sweep rate of the A Sweep Generator is bracketed by the two black lines on the clear plastic inner flange of the TIME/CM switch (see Fig. 2-5). The B Sweep Generator sweep rate is indicated by the dot on the DELAYED SWEEP knob. When the dot on the outer knob is set to the same position as the lines on the inner knob, the two knobs lock together and the sweep rate of both Sweep Generators is changed at the same time. However, when the DELAYED SWEEP knob is pulled outward, the inner flange is disengaged and only the B Sweep Generator sweep rate is changed. This allows changing the delayed sweep rate without changing the delay time determined by the A Sweep Generator.

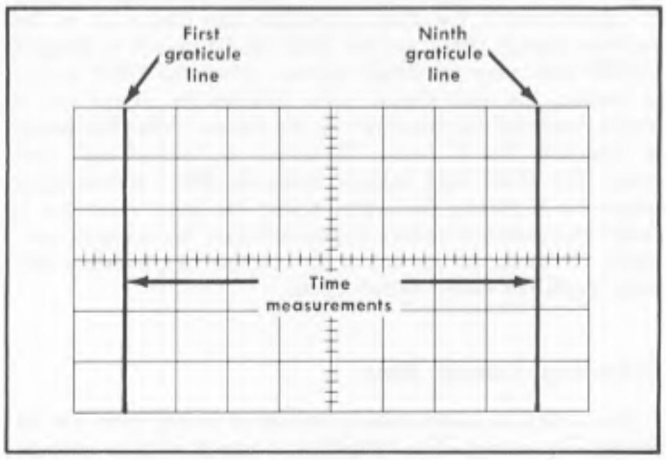

Fig. 2-6. Area of graticule used for accurate time measurements.

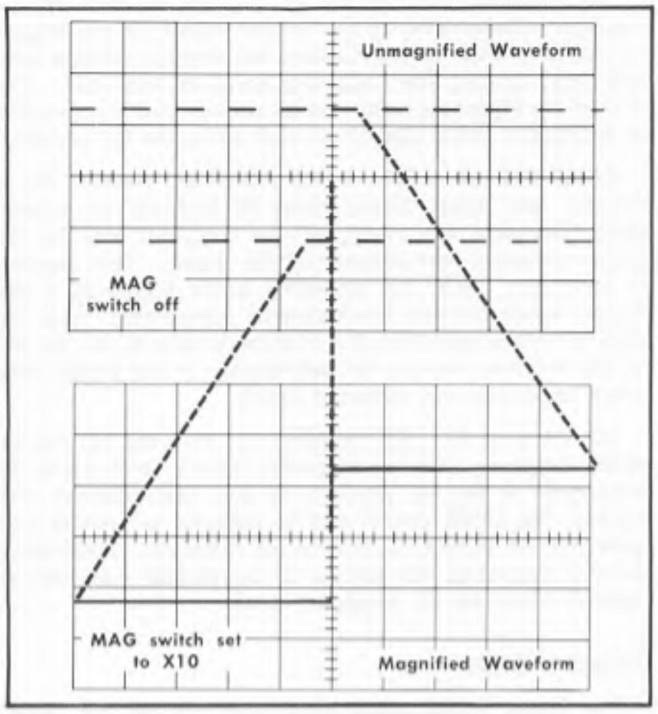

Fig. 2-7. Operation of sweep magnifier.

When making time measurements from the graticule, the area between the first and ninth graticule lines provides the most linear time measurement (see Fig. 2-6). Therefore, the first and last division of the display should not be used for making accurate time measurements. Position the start of the timing area to the first graticule line and set the TIME/CM switch so the end of the timing area falls between the first and ninth graticule lines.

Sweep Magnification

The sweep magnifier expands the sweep ten times. The center division of the unmagnified display is the portion visible on the screen in magnified form (see Fig. 2-7). Equivalent length of the magnified sweep is about 100 divisions; any 10 division portion may be viewed by adjusting the horizontal position control to bring the desired portion onto the viewing area. The fine position control is particularly useful when the magnifier is on, as it provides positioning in small increments for more precise control.

To use the magnified sweep, first move the portion of the display which is to be expanded to the center of the graticule. Then set the MAG switch to ×10. The fine position control can be adjusted to move the magnified portion to the desired position. The light located beside the MAG switch is on whenever the switch is set to ×10.

When the MAG switch is set to×10, the sweep rate is determined by dividing the TIME/CM switch setting by 10. For example, if the TIME/CM switch is set to .5 μSEC, the magnified sweep rate is 0.05 microsecond/centimeter. The magnified sweep rate must be used for all time measurements when the MAG switch is set to ×10. The magnified sweep rate is calibrated when the UNCAL light is off.

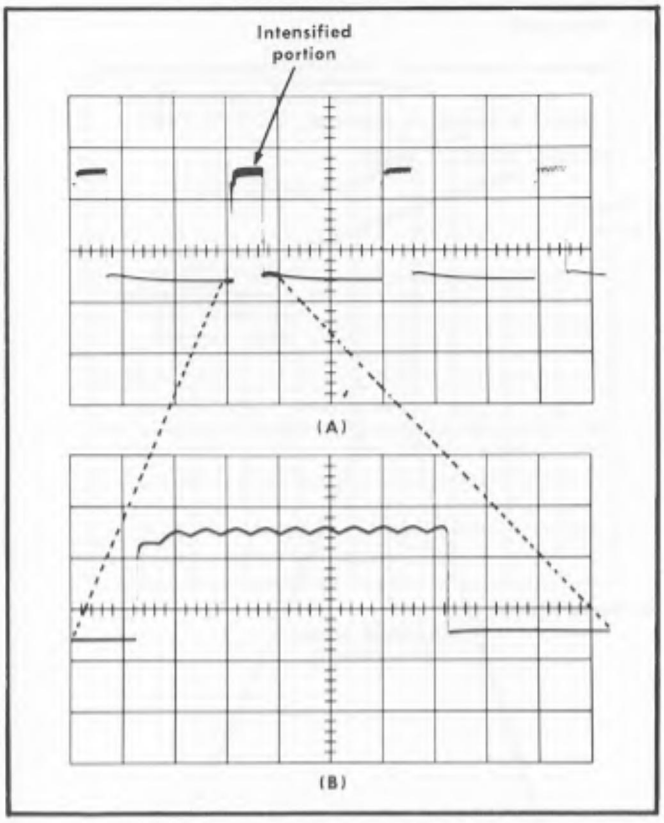

Fig. 2-8. (A) A INTEN BY B display (A TIME/CM, .5 μSEC; B TIME/CM, 50 μSEC), (B) B DLY'D BY A display.

Delayed Sweep

The delayed sweep (B sweep) is operable in the A INTEN BY B and B DLY'D A (triggered and not triggered) positions of the HORIZ DISPLAY switch. The A sweep along with the DELAY TIME MULT dial determines the time that the B sweep is delayed. Sweep rate of the delayed portion is determined by the B TIME/CM (DELAYED SWEEP) switch setting.

In the A INTEN BY B positions, the display will appear similar to Fig. 2-8A. The amount of delay time between the start of A sweep and the intensified portion is determined by the setting of the A TIME/CM switch and the DELAY TIME MULT dial. The outer numbers of the DELAY TIME MULT dial are major dial divisions and the inner numbers are minor dial divisions. For example, the DELAY TIME MULT dial reading as shown in Fig. 2-9 is 3.55 (3 major divisions and 55 minor divisions). This reading multiplied by the setting of the A TIME/CM switch gives the calibrated delay time of B sweep. The intensified portion of the display is produced by B Sweep. The length of this portion is about 10 times the setting of the B TIME/CM switch.

When the HORIZ DISPLAY switch is set to B DLY'D BY A, only the intensified portion is displayed on the screen at the sweep rate indicated by the B TIME/CM switch (see Fig. 2-8B).

B Sweep Mode. The triggered and not triggered A INTEN BY B and B DLY'D BY A positions provide two modes of delayed sweep. Fig. 2-10 illustrates the difference between these two modes. In the not triggered positions, the B sweep is presented immediately after the delay time (see Fig. 2-10A).

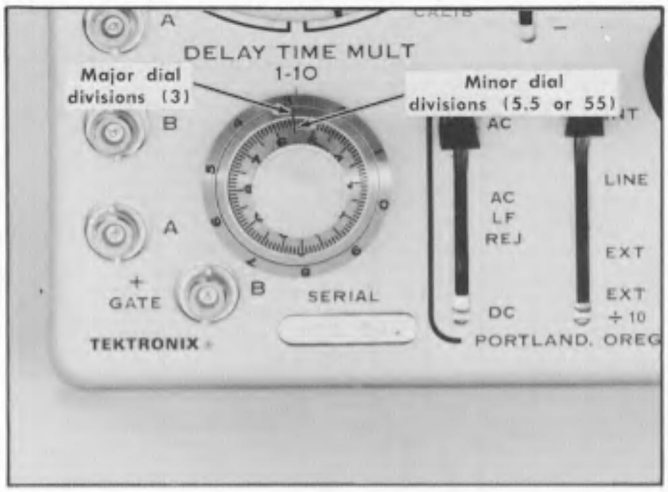

Fig. 2-9. DELAY-TIME MULT dial. Reading shown 3.55.

The B sweep is essentially free running. However, since the delay time is the same for each sweep, the display appears stable. In the triggered positions (note arrows to the B trigger control area), the B sweep operates only when triggered after the selected delay time (see Fig. 2-10B). The B triggering controls operate as described previously in this section.

Delayed Sweep Operation. To obtain a delayed sweep display, use the following procedure.

1. Set the HORIZ DISPLAY switch to A INTEN BY B. Select the delayed sweep mode by setting this switch to the not triggered positions (to left of A) or the triggered positions (to right of A). If the triggered mode is used, correct B triggering is also necessary.

2. Set the delay time with the A TIME/CM switch and the DELAY TIME MULT dial.

3. Pull the DELAYED SWEEP (B TIME/CM) knob out and set it to the desired sweep rate.

4. If the triggered mode is used, check the display for an intensified portion. Absence of the intensified zone indicates that the B sweep is not correctly triggered.

5. Set the HORIZ DISPLAY switch to B DLY'D BY A. The intensified zone shown in the A INTEN BY B position is now displayed at the sweep rate selected by the B TIME/CM switch.

Several examples of the uses of the delayed sweep feature are given under Basic Applications in this secion.

External Horizontal Operation

In some applications, it is desirable to display one signal versus another (X-Y) rather than against time (internal sweep). The EXT INPUT position of the HORIZ DISPLAY switch provides a means for applying an external signal to the horizontal amplifier for this type of display.

Connect the external horizontal signal to the B TRIG IN OR EXT INPUT connector. Set the HORIZ DISPLAY switch to EXT INPUT and the B SOURCE switch to EXT. The signal can be either AC or DC coupled to the horizontal amplifiers as sel-

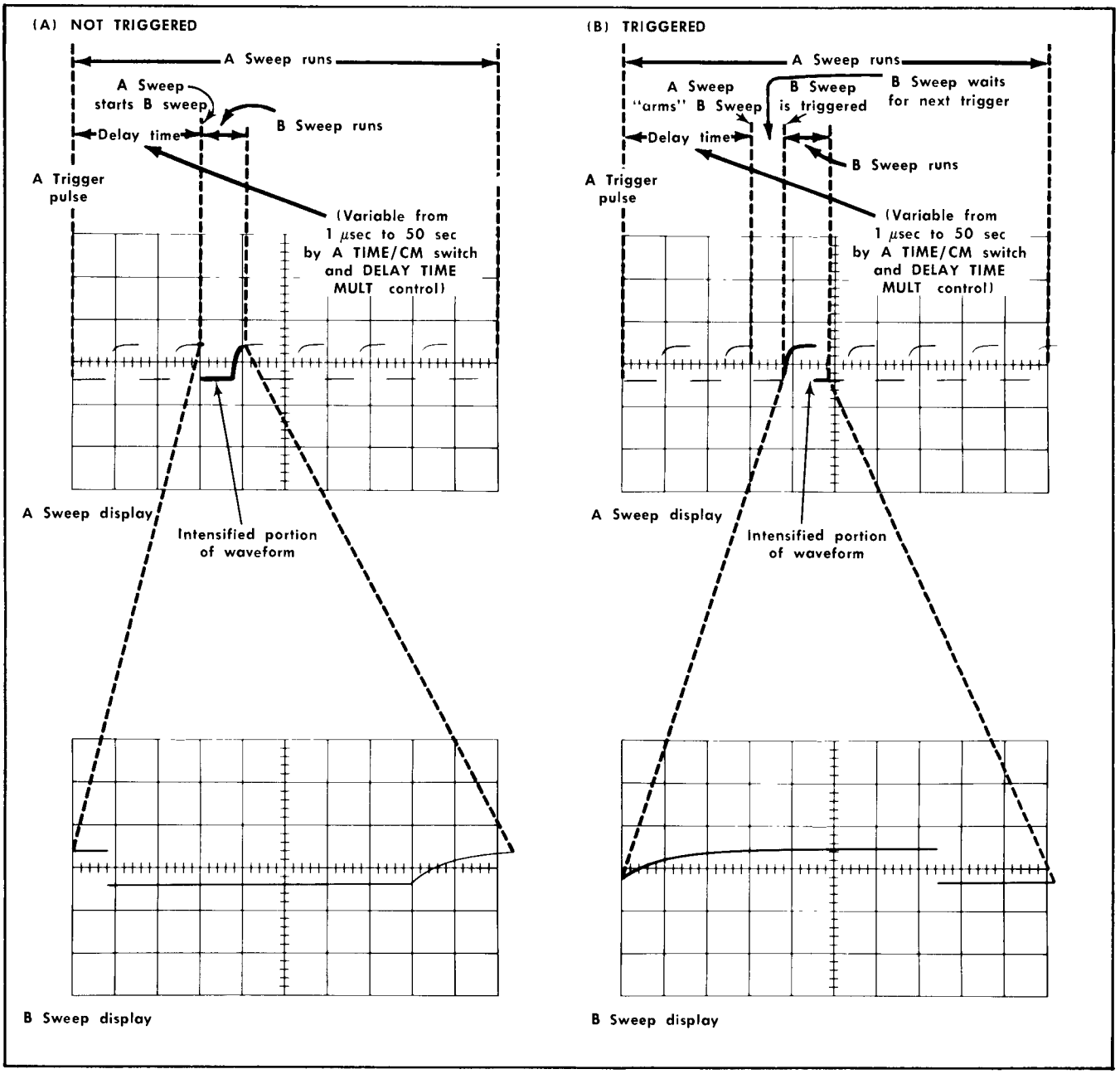

Fig. 2-10. Comparison of the delayed-sweep modes. (A) Not triggered, (B) Triggered. In each display the B Sweep is delayed a selected amount of time by the A Sweep.

lected by the B COUPLING switch. The horizontal deflection can be increased 10 times by setting the MAG switch to ×10.

Sweep Generator Output Signals

The SWEEP and + GATE output connectors are of the BSM type. An adapter from BNC to a BSM type output connector is supplied as a standard accessory with this instrument or it may be ordered from Tektronix, Inc. by Tektronix Part No. 103-0036-00.

A and B SWEEP. The A and B SWEEP connectors provide a sample of the sawtooth sweep signal from the respective sweep generator. Amplitude of the sweep output signal is about +10 volts into a high-impedance load.

A and B + GATE. The A and B + GATE output connectors provide a rectangular output pulse which is coincident with the sweep of the respective sweep generator. This rectangular pulse is about +15 volts in amplitude (into high-impedance load) with a duration about 11 times the setting of the applicable TIME/CM switch.

BASIC APPLICATIONS

General

The following information describes the procedure and technique for making basic measurements with a Type 11B2A Time Base unit and associated vertical unit and indicator oscilloscope. These applications are not described in detail

since each application must be adapted to the requirements of the individual measurements. Familiarity with the Type 11B2A and associated instruments will permit these basic applications to be applied to a variety of uses.

Time-Duration Measurements

To measure time between two points on a waveform, use the following procedure.

1. Connect the signal to the input connector of the vertical unit.

2. Set the vertical unit volts/centimeter switch to display about five centimeters of the waveform.

3. Set the A Trigger controls to obtain a stable display.

4. Set the TIME/CM switch to the fastest sweep rate that displays less than eight centimeters between the time measurement points (see Fig. 2-11). See the topic entitled Selecting Sweep Rate in this section concerning nonlinearity of first and last centimeters of display.

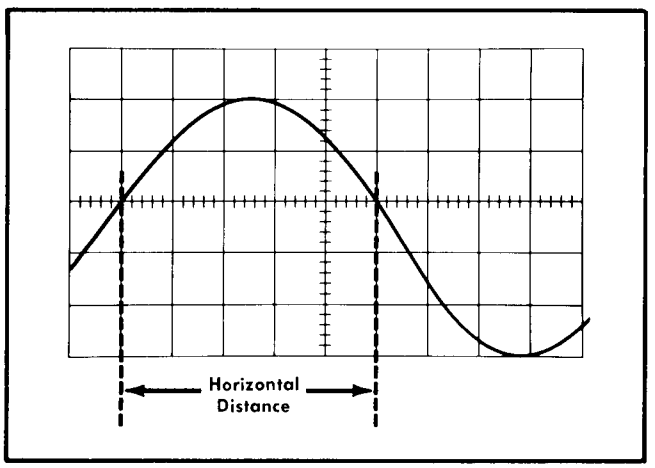

Fig. 2-11. Measuring the time duration between points on a waveform.

5. Adjust the vertical unit position control to move the points between which the time measurement is made to the center horizontal line.

6. Adjust the horizontal position control to move the starting point of the time measurement area to the first vertical graticule line.

7. Measure the horizontal distance between the time measurement points. Be sure the VARIABLE A control is set to CALIB.

8. Multiply the distance measured in step 7 by the setting of the TIME/CM switch. If sweep magnification is used, divide this answer by 10.

Example. Assume that the distance between the time measurement points is five centimeters (see Fig. 2-11) and the TIME/CM switch is set to .1 mSEC with the magnifier off. Using the formula:

$$\text{Time Duration} = \frac{\text{horizontal distance centimeters} \times \text{TIME/CM setting}}{\text{magnification}}$$

Substituting the given values:

$$\text{Time Duration} = \frac{5 \times 0.1\ \text{mSEC}}{1}$$

The time duration is 0.5 milliseconds.

Frequency Measurements

The time measurement technique can also be used to determine the frequency of a signal. The frequency of a periodically recurrent signal is the reciprocal of the time duration (period) of one cycle.

Use the following procedure:

1. Measure the time duration of one cycle of the waveform as described in the previous application.

2. Frequency of a signal is the reciprocal of the time duration of one cycle.

Example. The frequency of the signal shown in Fig. 2-11 which has a time duration of 0.5 milliseconds is:

$$\text{Frequency} = \frac{1}{\text{time duration}} = \frac{1}{0.5\ \text{ms}} = 2\ \text{kHz}$$

Risetime Measurements

Risetime measurements employ basically the same techniques as time-duration measurements. The main differences is the points between which the measurement is made. The following procedure gives the basic method of measuring risetime between the 10% and 90% points of the waveform. Falltime can be measured in the same manner on the trailing edge of the waveform.

1. Connect the signal to the input connector of the vertical unit.

2. Set the vertical unit volts/centimeter switch and the variable control to produce a display an exact number of centimeters in amplitude.

3. Center the display about the center horizontal line.

4. Set the TIME/CM switch to the fastest sweep rate that displays less than eight centimeters horizontally between the 10% and 90% points on the waveform.

5. Determine the 10% and 90% points on the rising portion of the waveform. The figures given in Table 2-1 are for the points 10% up from the start of the rising portion and 10% down from the top of the rising portion (90% point).

TABLE 2-1

Vertical Display (Centimeters)	10% and 90% points
4	0.4 centimeter
5	0.5 centimeter
6	0.6 centimeter

6. Adjust the horizontal POSITION control to move the 10% point of the waveform to the first graticule line. For

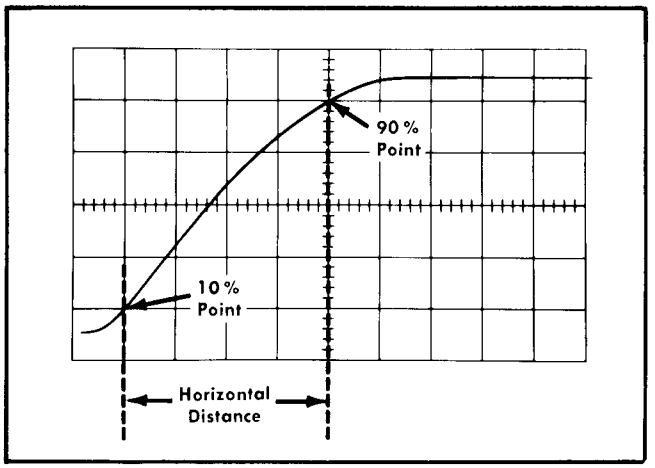

Fig. 2-12. Measuring risetime.

example, with a five-division display as shown in Fig. 2-12, the 10% point is 0.5 centimeter up from the start of the rising portion.

7. Measure the horizontal distance between the 10% and 90% points. Be sure the VARIABLE A control is set to CALIB.

8. Multiply the distance measured in step 7 by the setting of the TIME/CM switch. If sweep magnification is used, divide this answer by 10.

Example. Assume that the horizontal distance between the 10% and 90% points is four centimeters (see Fig. 2-12) and the TIME/CM switch is set to 1 μSEC with the MAG switch set to $\times$10.

The risetime is 0.4 microsecond.

$$\text{Risetime (Time Duration)} = \frac{\text{horizontal distance (centimeters)} \times \text{TIME/CM setting}}{\text{magnification}}$$

Substituting the given values:

$$\text{Risetime} = \frac{4 \times 1\ \mu\text{SEC}}{10}$$

The risetime is 0.4 microsecond.

Time-Difference Measurements

The calibrated sweep rate of the Type 11B2A, when used with a dual-trace vertical unit, allows measurement of time difference between two separate events. To measure time difference, use the following procedure.

1. Set the vertical unit input coupling switches to the desired coupling positions.

2. Set the vertical unit mode switch to either chopped or alternate. In general, chopped is more suitable for low-frequency signals and the alternate mode is more suitable for high-frequency signals. More information on determining the mode is given under Dual-Trace Operation in this section.

3. Set the vertical unit to trigger from only one channel.

4. Connect the reference signal to the channel which has separate triggering capabilities and the comparison signal to the other channel. The reference signal should precede the comparison signal in time. Use coaxial cables or probes which have equal time delay to connect the signals to the input connectors.

5. If the signals are of opposite polarity, invert the signal on one channel.

6. Set the vertical unit volts/centimeter switches to produce four- or five-centimeters display.

7. Set the LEVEL control for a stable display.

8. Set the TIME/CM switch for a sweep rate which shows three or more centimeters between the two waveforms.

9. Adjust the vertical unit position controls to center each waveform (or the points on the display between which the measurement is made) in relation to the horizontal centerline.

10. Adjust the horizontal position control so the reference waveform crosses the horizontal centerline at a vertical graticule line.

11. Measure the horizontal difference between the Channel 1 waveform and the Channel 2 waveform (see Fig. 2-13).

12. Multiply the measured difference by the setting of the TIME/CM switch. If sweep magnification is used, divide this answer by 10.

Example. Assume that the TIME/CM switch is set to 50 μSEC, the MAG switch to $\times$10 and the horizontal difference between waveforms is 4.5 centimeters (see Fig. 2-13).

Using the formula:

$$\text{Time Delay} = \frac{\text{TIME/CM setting} \times \text{horizontal difference (centimeters)}}{\text{magnification}}$$

Substituting the given values:

$$\text{Time Delay} = \frac{50\ \mu\text{SEC} \times 4.5}{10}$$

The time delay is 22.5 microseconds.

Delayed Sweep Time Measurements

The delayed sweep mode can be used to make accurate

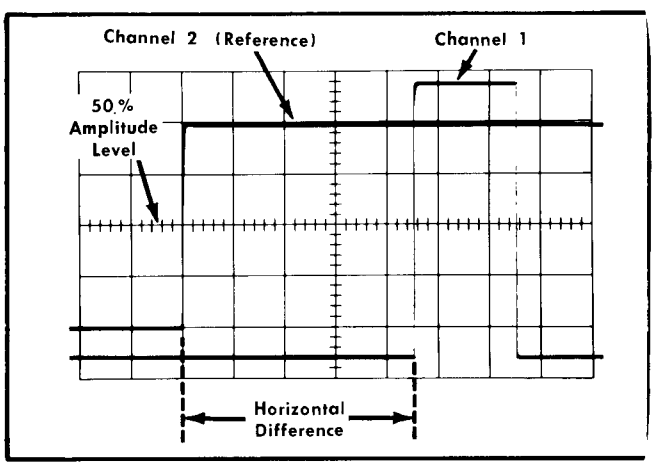

Fig. 2-13. Measuring time difference between two pulses.

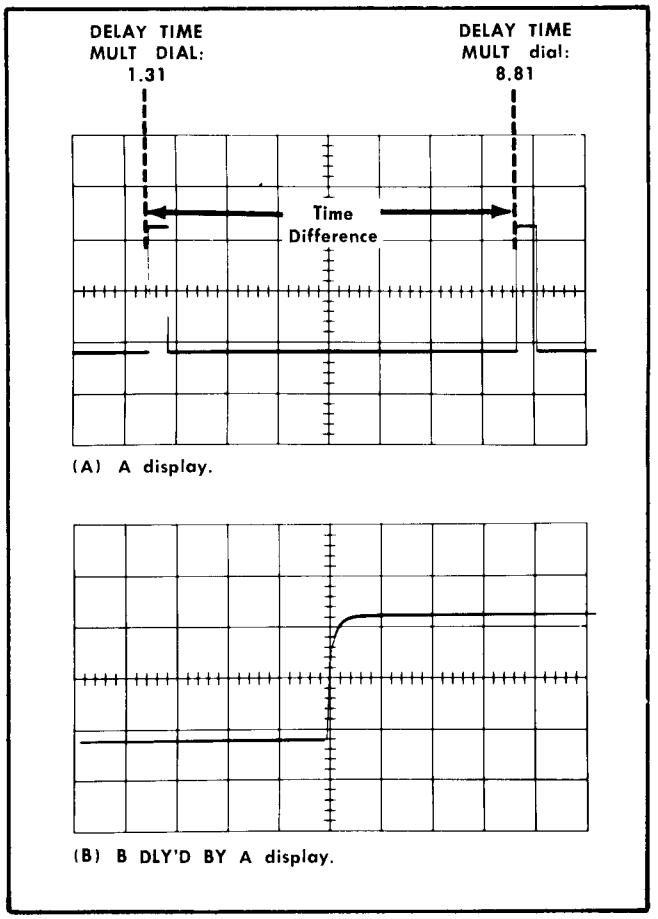

Fig. 2-14. Measuring time difference using delayed sweep.

time measurements. Overall accuracy of the time measurements will be affected by the following factors:

A. Accuracy of the A Sweep Generator at the sweep rate used.

B. DELAY TIME MULT dial incremental linearity.

The following measurement determines the time difference between two pulses displayed on the same trace. This application may also be used to measure time difference from two different sources (dual-trace) or to measure time duration of a single pulse.

1. Connect the signal to the vertical unit input connector.

2. Set the vertical unit volts/centimeter switch to produce a display about four centimeters in amplitude.

3. Set the A TIME/CM switch to a sweep rate which displays about eight centimeters between the pulses.

4. Adjust the A trigger controls for a stable display.

5. Set the HORIZ DISPLAY switch to A INTEN BY B (not triggered).

6. Set the B TIME/CM switch to a setting 1/100 of the A TIME/CM sweep rate. This produces an intensified portion about 0.1 centimeter in length.

7. Turn the DELAY TIME MULT dial to move the intensified portion to the first pulse.

8. Set the HORIZ DISPLAY switch to B DLY'D BY A (not triggered).

9. Adjust the DELAY TIME MULT dial to move the pulse (or the rising portion) to the center vertical line. Note the setting of the DELAY TIME MULT dial.

10. Turn the DELAY TIME MULT dial clockwise until the second pulse is positioned to this same point (if several pulses are displayed, return to the A INTEN BY B position to locate the correct pulse). Again note the dial setting.

11. Subtract the first dial setting from the second and multiply by the delay time shown by the A TIME/CM switch. This is the time interval between the pulses.

Example. Assume the first dial reading is 1.31 and the second dial setting is 8.81 with the A TIME/CM switch set to 0.2 μSEC (see Fig. 2-14).

Using the formula:

$$\text{Time Difference (delayed sweep)} = \text{second dial setting} - \text{first dial setting} \times \text{delay time (A TIME/CM setting)}$$

Substituting the given values:

$$\text{Time Difference} = (8.81 - 1.31) \times 0.2\ \mu\text{s}.$$

The time difference is 1.5 microseconds.

Delayed Sweep Magnification

The delayed sweep feature of the Type 11B2A can be used to provide higher apparent magnification than is provided by the MAG switch. The sweep rate of the DELAYED SWEEP (B sweep) is not actually increased; the apparent magnification is the result of delaying the B sweep an amount of time selected by the A TIME/CM switch and the DELAY TIME MULT dial before the display is presented at the sweep rate selected by the B TIME/CM switch. The following method uses the not triggered delayed sweep mode to allow the delayed portion to be positioned with the DELAY TIME MULT dial. If there is too much jitter in the delayed display, use the Triggered Delayed Sweep Magnification procedure which follows.

1. Connect the signal to the vertical unit input connector.

2. Set the vertical unit volts/centimeter switch to produce a display.

3. Set the A TIME/CM switch to a sweep rate which displays the complete waveform.

4. Adjust the A trigger controls for a stable display.

5. Set the HORIZ DISPLAY switch to A INTEN BY B (not triggered).

6. Position the start of the intensified portion with the DELAY TIME MULT dial to the part of the display to be magnified.

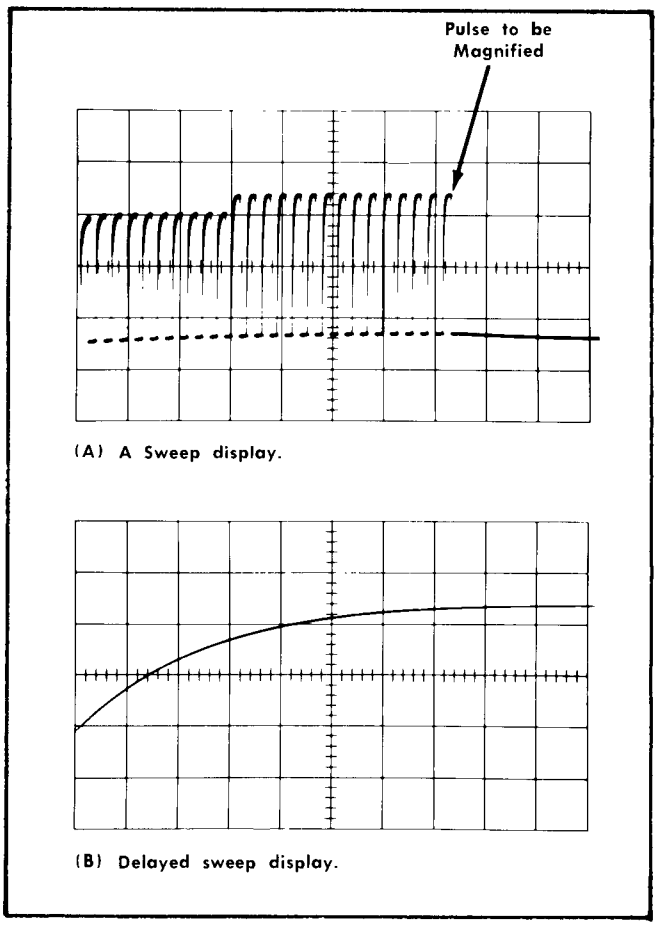

(A) A Sweep display.

(B) Delayed sweep display.

Fig. 2-15. Using delayed sweep for sweep magnification.

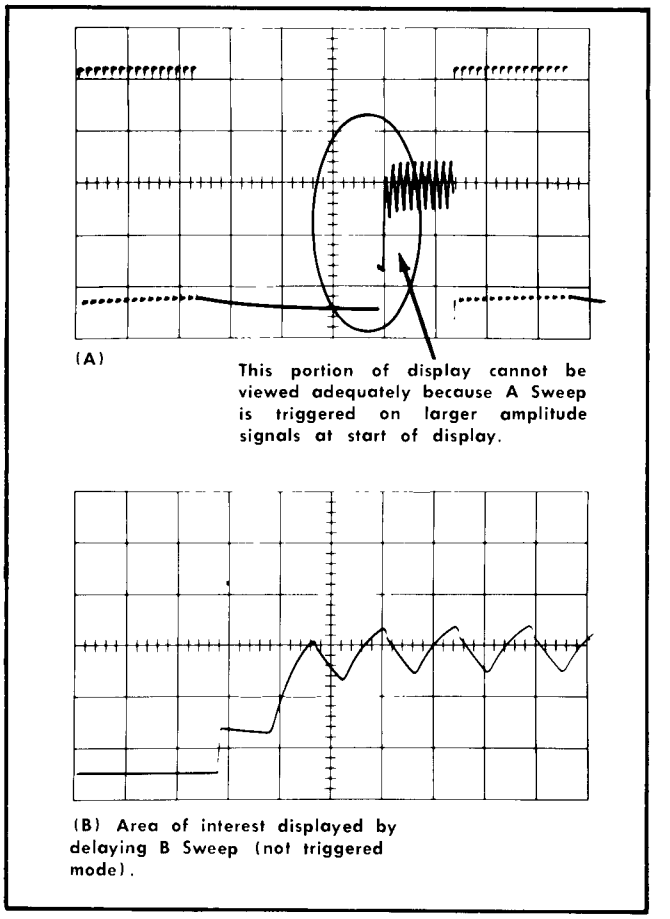

(B) Area of interest displayed by delaying B Sweep (not triggered mode).

Fig. 2-16. Displaying a complex signal using delayed sweep.

7. Set the B TIME/CM switch to a setting which intensifies the full portion to be magnified. The start of the intensified trace remains as positioned above.

8. Set the HORIZ DISPLAY switch to B DLY'D BY A (not triggered).

9. Time measurements can be made from the display in the conventional manner. Sweep rate is determined by the setting of the B TIME/CM switch.

10. The apparent sweep magnification can be calculated by dividing the A TIME/CM switch setting by the B TIME/CM switch setting.

Example. The apparent magnification of the display shown in Fig. 2-15 with an A TIME/CM switch setting of .1 mSEC and a B TIME/CM switch setting of 1 μSEC is:

$$\text{Apparent Magnification (Delayed Sweep)} = \frac{\text{A TIME/CM setting}}{\text{B TIME/CM setting}}$$

Substituting the given values:

$$\text{Apparent Magnification} = \frac{1 \times 10^{-4}}{1 \times 10^{-6}} = 1 \times 10^{2}$$

The apparent magnification is 100 times.

Triggered Delayed Sweep Magnification

The delayed sweep magnification method just described may produce too much jitter at high apparent magnification ranges. The triggered delayed sweep mode provides a more stable display since the delayed display is triggered at the same point each time.

1. Set up the display as given in steps 1 through 7 described above.

2. Set the HORIZ DISPLAY switch to A INTEN BY B (triggered).

3. Adjust the B LEVEL control so the intensified portion on the trace is stable. (If an intensified portion cannot be obtained, see step 4.)

4. Inability to intensify the desired portion indicates that the signal does not meet the triggering requirements. If the condition cannot be remedied with the B LEVEL control or by increasing the display amplitude (lower vertical unit volts/centimeter setting), trigger B sweep externally.

5. When the correct portion is intensified, set the HORIZ DISPLAY switch to B DLY'D BY A (triggered). Slight readjustment of the B LEVEL control may be necessary for a stable display.

6. Measurement and magnification are as described above.

Displaying Complex Signals Using Delayed Sweep

Complex signals often consist of a number of individual events of differing amplitudes. Since the trigger circuits are

sensitive to changes in signal amplitude, a stable display can normally be obtained only when the sweep is triggered by the event(s) having the greatest amplitude. However, this may not produce the desired display of a lower-amplitude portion which follows the triggering event. The delayed sweep feature provides a means of delaying the start of the B Sweep by a selected amount following the event which triggers the A Sweep Generator. Then, the part of the waveform which contains the information of interest can be displayed.

Use the following porcedure:

1. Connect the signal to the vertical unit input connector.

2. Set the vertical unit volts/centimeter switch to produce a display about four centimeters in amplitude.

3. Set the A TIME/CM switch to a sweep rate which displays the complete waveform.

4. Adjust the A trigger controls for a stable display.

5. Set the HORIZ DISPLAY switch to A INTEN BY B (not triggered).

6. Position the start of the intensified portion with the DELAY TIME MULT dial to the part of the display to be magnified.

7. Set the B TIME/CM switch to a setting which intensifies the full portion to be magnified. The start of the intensified trace will remain as positioned above.

8. Set the HORIZ DISPLAY switch to B DLY'D BY A (not triggered).

9. Time measurements can be made from the display in the conventional manner. Sweep rate is determined by the setting of the B TIME/CM switch.

Example. Fig. 2-16 shows a complex waveform as displayed on the CRT. The circled portion of the waveform cannot be viewed in any greater detail because the sweep is triggered by the larger amplitude pulses at the start of the display and a faster sweep rate moves this area of the waveform off the viewing area. The second waveform shows the area of interest magnified 10 times using Delayed Sweep. The DELAY TIME MULT dial has been adjusted so the delayed sweep starts just before the area of interest.

Pulse Jitter Measurements

In some applications it is necessary to measure the amount of jitter on the leading edge of a pulse or jitter between pulses. Use the following procedure:

1. Connect the signal to the vertical unit input connector.

2. Set the vertical unit volts/division switch to display about four divisions of the waveform.

3. Set the A TIME/CM switch to a sweep rate which displays the complete waveform.

4. Set the A trigger controls to obtain as stable a display as possible.

5. Set the HORIZ DISPLAY switch to A INTEN BY B (not triggered).

6. Position the start of the intensified portion with the DELAY TIME MULT dial so that the pulse to be measured is intensified.

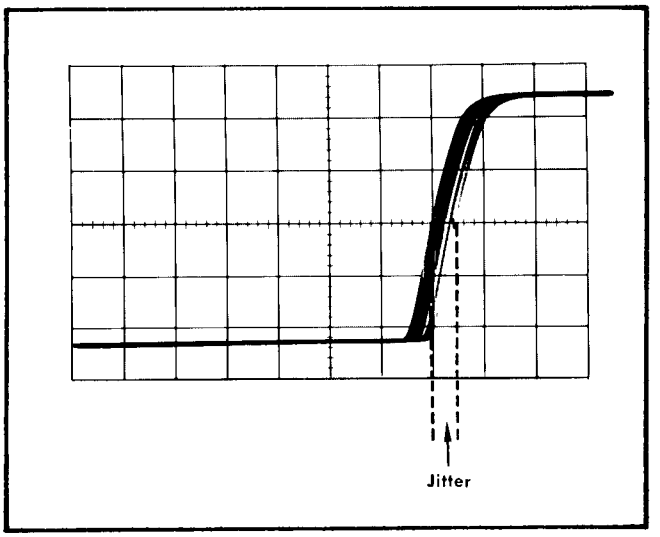

Fig. 2-17. Measuring pulse pitter.

7. Set the B TIME/CM switch to a setting which intensifies the full portion of the pulse which shows jitter.

8. Set the HORIZ DISPLAY switch to A INTEN BY B (triggered).

9. Adjust the B LEVEL control so the intensified portion is as stable as possible.

10. Set the HORIZ DISPLAY switch to B DLY'D BY A (triggered). Slight readjustment of the B LEVEL control may be necessary to produce as stable a display as possible.

11. Pulse jitter is shown by horizontal movement of the pulse (take into account inherent jitter of Delayed Sweep). Measure the amount of horizontal movement. Be sure both VARIABLE controls are set to CALIB.

12. Multiply the distance measured in step 11 by the B TIME/CM switch setting to obtain pulse jitter in time.

Example. Assume that the horizontal movement is 0.5 centimeters (see Fig. 2-17), and the B TIME/CM switch setting is .5 μSEC.

Using the formula:

$$\text{Pulse Jitter} = \begin{matrix}\text{horizontal}\\ \text{jitter}\\ \text{(centimeters)}\end{matrix} \times \begin{matrix}\text{B TIME/CM}\\ \text{setting}\end{matrix}$$

Substituting the given values:

$$\text{Pulse Jitter} = 0.5 \times 0.5\ \mu\text{SEC}$$

The pulse jitter is 0.25 microseconds.

Delayed Trigger Generator

The B +GATE output signal can be used to trigger an external device at a selected delay time after the start of A Sweep. The delay time of the B +GATE output signal can be selected by the setting of the DELAY TIME MULT dial and A TIME/CM switch.

A Sweep Triggered Internally. When A Sweep is triggered internally to produce a normal display, the delayed trigger may be obtained as follows.

1. Obtain a triggered display in the normal manner.

2. Set the HORIZ DISPLAY switch to A INTEN BY B (not triggered).

3. Select the amount of delay from the start of A sweep with the DELAY TIME MULT dial. Delay time can be calculated in the normal manner.

4. Connect the B +GATE signal to the external equipment.

5. The duration of the B +GATE pulse is determined by the setting of the B TIME/CM switch.

6. The external equipment will be triggered at the start of the intensified portion if it responds to positive-going triggers, or at the end of the intensified portion if it responds to negative-going triggers.

A Sweep Triggered Externally. This mode of operation can be used to produce a delayed trigger with or without a corresponding display. Connect the external trigger signal to the A TRIG IN connector and set the A SOURCE switch to EXT. Follow the operation given above to obtain the delayed trigger.

Normal Trigger Generator

Ordinarily, the signal to be displayed also provides the trigger signal for the oscilloscope. In some instances, it may be desirable to reverse this situation and have the oscilloscope trigger the signal source. This can be done by connecting the A +GATE signal to the input of the signal source. Set the A LEVEL control fully clockwise, TRIG MODE switch to FREE RUN and adjust the A TIME/CM switch for the desired display. Since the signal source is triggered by a signal that has a fixed time relationship to the sweep, the output of the signal source can be displayed on the CRT as though the Type 11B2A were triggered in the normal manner.

Multi-Trace Phase Difference Measurements

Phase comparison between two signals of the same frequency can be made using a dual-trace vertical unit with the Type 11B2A. This method of phase difference measurement can be used up to the frequency limit of the vertical system. To make the comparison, use the following procedure.

1. Set the vertical unit input coupling switches to the same position, depending on the type of coupling desired.

2. Set the vertical unit mode switch to either chopped or alternate. In general, chopped is more suitable for low-frequency signals and the alternate mode is more suitable for high-frequency signals. More information on determining the vertical mode is given in the plug-in unit instruction manual.

3. Set the vertical unit to trigger from only one channel.

4. Connect the reference signal to the channel which has separate triggering capabilities and the comparison signal to the other channel. The reference signal should precede the comparison signal in time. Use coaxial cables or probes which have equal time delay to connect the signals to the input connectors.

5. If the signals are of opposite polarity, invert the signal on one channel. (Signals may be of opposite polarity due to 180° phase difference; if so, take into account in final calculation.)

6. Set the vertical unit volts/centimeter switches and the variable volts/centimeter controls so the displays are equal and about five centimeters in amplitude.

7. Set the 11B2A trigger controls to obtain a stable display.

8. Set the TIME/CM switch to a sweep rate which displays about one cycle of the waveform.

9. Move the waveforms to the center of the graticule with the vertical position controls.

10. Turn the VARIABLE A control until one cycle of the reference signal (channel 1) occupies exactly eight divisions between the first and ninth graticule lines (see Fig. 2-18). Each division of the graticule represents 45° of the cycle (360° ÷ 8 centimeters = 45°/centimeter). The sweep rate can be stated in terms of degrees as 45°/centimeter.

11. Measure the horizontal difference between corresponding points on the waveform.

12. Multiply the measured distance (in centimeters) by 45° (sweep rate) to obtain the exact amount of phase difference.

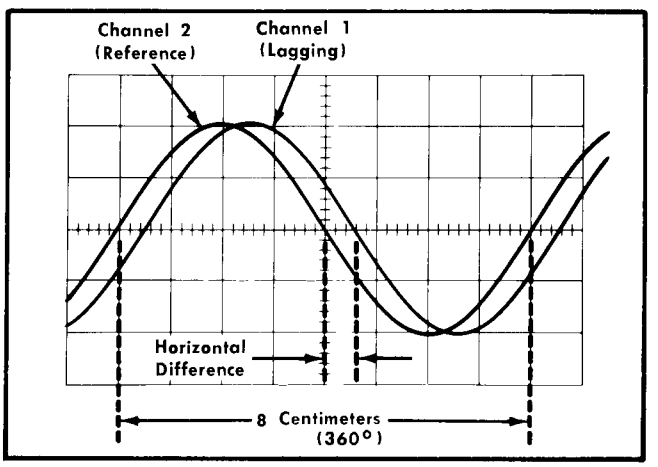

Fig. 2-18. Measuring phase difference.

Example. Assume a horizontal difference of 0.6 centimeter with a sweep rate of 45° as shown in Fig. 2-18.

Using the formula:

$$\text{Phase Difference} = \begin{matrix}\text{horizontal}\\ \text{difference}\\ \text{(centimeters)}\end{matrix} \times \begin{matrix}\text{sweep rate}\\ \text{(degrees/div)}\end{matrix}$$

Substituting the given values:

$$\text{Phase Difference} = 0.6 \times 45°$$

The phase difference is 27°.

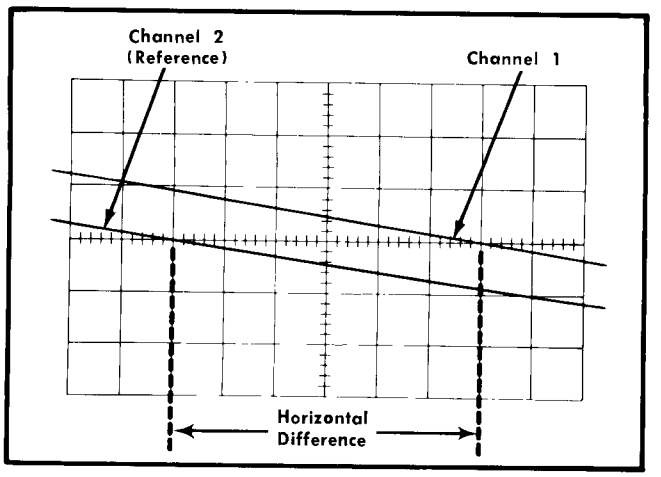

Fig. 2-19. High resolution phase-difference measurement with increased sweep rate.

High Resolution Phase Measurements

More accurate dual-trace phase measurements can be made by increasing the sweep rate (without changing the VARIABLE A control setting). One of the easiest ways to increase the sweep rate is with the MAG switch. Delayed sweep magnification may also be used. The adjusted phase factor is determined by dividing the phase factor obtained previously by the increase in sweep rate.

Example. If the sweep rate were increased 10 times with the magnifier, the magnified sweep rate would be 45° ÷ 10 = 4.5°/division. Fig. 2-19 shows the same signals as used in Fig. 2-18 but with the MAG switch set to ×10. With a horizontal difference of 6 centimeters, the phase difference would be:

Phase Difference =

horizontal difference (centimeters) × magnified sweep rate (degrees/div)

Substituting the given values:

Phase Difference = 6 × 4.5°.

The phase difference is 27°.

NOTES

SECTION 3
CIRCUIT DESCRIPTION

Introduction

This section of the manual contains a description of the circuitry used in the Type 11B2A Time Base unit. The description begins with a discussion of the instrument using the basic block diagram shown in Fig. 3-1. Then each circuit is described in detail using a detailed block diagram to show the interconnections between the stages in each major circuit and the relationship of the front-panel controls to the individual stages.

A complete block diagram is located in the Diagrams section at the rear of this manual. This block diagram shows the overall relationship between all of the circuits in this instrument. Complete schematics of each circuit are also given in the Diagrams section. Refer to these diagrams throughout the following circuit description for electrical values and relationship.

BLOCK DIAGRAM

General

The following discussion is provided to aid in understanding the overall concept of the Type 11B2A before the individual circuits are discussed in detail. A basic block diagram of the Type 11B2A is shown in Fig. 3-1. Only the basic interconnections between the individual blocks are shown on this diagram. Each block represents a major circuit within the instrument. The number on each block refers to the complete circuit diagram which is located at the rear of this manual.

The internal trigger signal from the vertical plug-in unit is connected to the Internal Trigger Preamp stage in the A Trigger Generator circuit. Output of the Internal Trigger Preamp stage is connected to both the A and B Trigger Generator circuits. The A and B Trigger Generator circuits produce an output pulse which initiates the sweep signal produced by the A or B Sweep Generator circuits. The input signal to the A Trigger Generator circuit can be selected from the internal trigger signal, an external signal applied to the A TRIG IN connector, or a sample of the line voltage applied to the indicator oscilloscope. The B Trigger Generator input signal can be selected from the internal trigger signal or an external signal applied to the B TRIG IN connector. Each trigger circuit contains level, slope, coupling and source controls. The input signal applied to the B Trigger Generator is connected to the Horizontal Preamp circuit in the EXT INPUT position of the HORIZ DISPLAY switch to provide external horizontal deflection.

The A Sweep Generator circuit produces a linear sawtooth output signal when initiated by the A Trigger Generator circuit. The slope of the sawtooth produced by the A Sweep Generator circuit is controlled by the A TIME/CM switch. The operating mode of the A Sweep Generator circuit is determined by the TRIG MODE switch. In the FREE RUN position, the output sawtooth free runs independently of any applied trigger pulses. In the AUTO position the sweep can be triggered when an adequate trigger signal is available, but the absence of an adequate trigger signal causes the sweep to free run. In the NORM position, a sweep is produced only when correctly triggered by an adequate trigger signal. The SINGLE SWEEP position allows one (and only one) sweep to be initiated after the A Sweep Generator circuit is reset with the RESET button.

The B Sweep Generator circuit is basically the same as the A Sweep Generator circuit. However, this circuit only produces a sawtooth output signal after a delay time determined by the A TIME/CM switch and the DELAY TIME MULT dial. If the HORIZ DISPLAY switch is set to the not-triggered B DLY'D BY A and A INTEN BY B positions (to left of A), the B Sweep Generator begins to produce the sweep immediately following the selected delay time. If this switch is set to the triggered B DLY'D BY A and A INTEN BY B positions (to right of A), the B Sweep Generator circuit does not produce a sweep until it receives a trigger from the B Trigger Generator circuit after the selected delay time.

The output of either the A or B Sweep Generator circuit is amplified by the Horizontal Preamp circuit to produce the horizontal deflection for the indicator oscilloscope CRT in all positions of the HORIZ DISPLAY switch except EXT INPUT. Other horizontal deflection signals can be connected to the Horizontal Preamp through the B TRIG IN OR EXT INPUT connector.

CIRCUIT OPERATION

General

The following circuit analysis is written around the detailed block diagrams which are given for each major circuit. These detailed block diagrams give the names of the individual stages within the major circuits and show how they are connected together. The block diagrams also show the inputs and outputs for each major circuit and the relationship of the front-panel controls to the individual steps. The circuit diagrams from which the detailed block diagrams are derived are shown in the Diagrams section of this manual. The names assigned to the individual stages on the block diagrams are used throughout the following discussion.

This circuit analysis attempts to describe the electrical operation and relationship of all circuits in the Type 11B2A. The theory of operation for circuits which are commonly used in the electronics industry is not described in detail in this discussion. Instead, references are given to textbooks or other source material where more complete information on these circuits can be found. Circuits which are unusual, or peculiar to this instrument are described in detail.

A TRIGGER GENERATOR

General

The A Trigger Generator circuit produces trigger pulses to start the A Sweep Generator circuit. These trigger pulses are

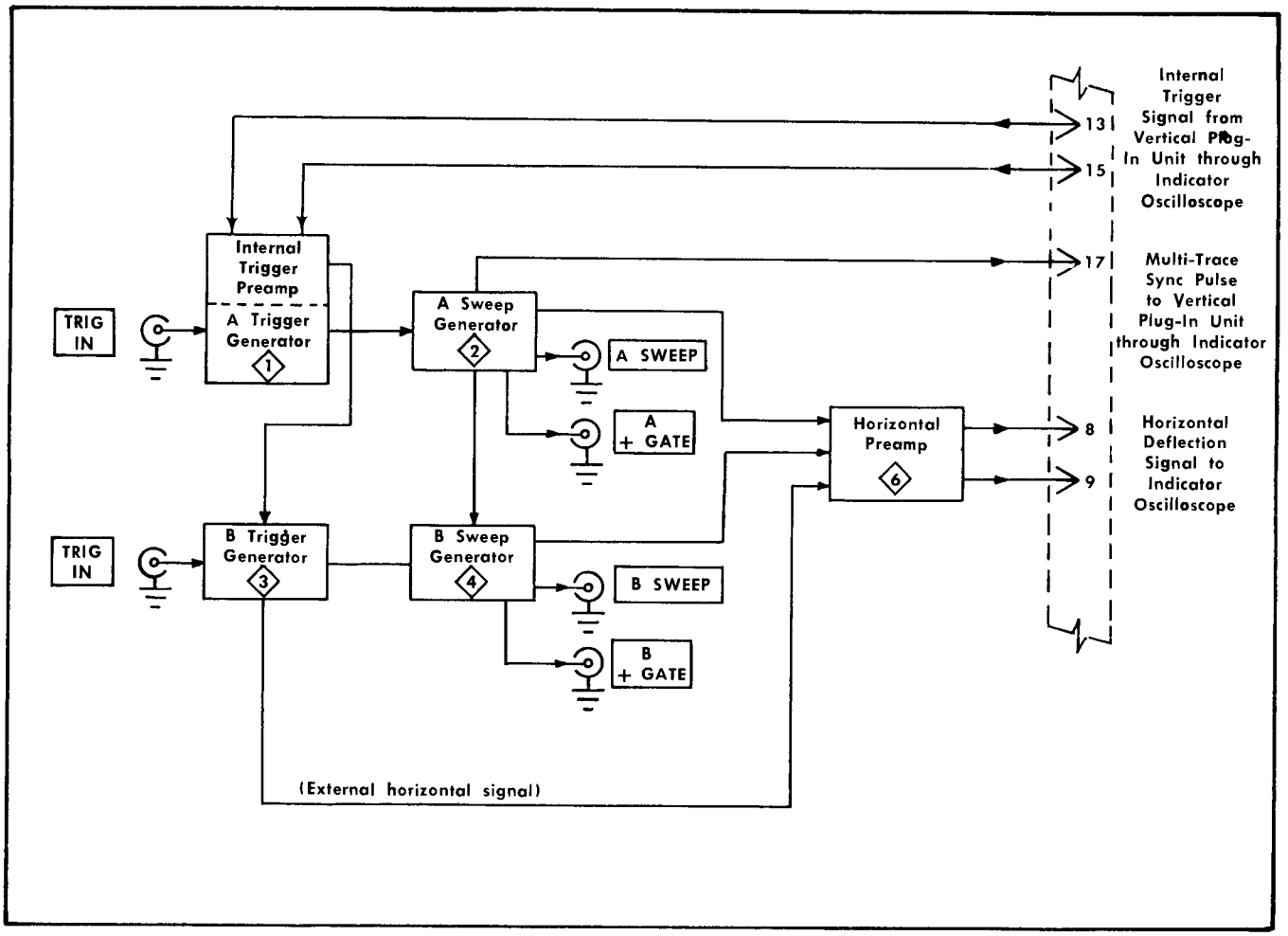

Fig. 3-1. Basic block diagram of Type 11B2A Time Base.

derived from the internal trigger signal from the vertical plug-in unit (through the Internal Trigger Preamp stage); from an external signal connected to the TRIG IN connector, or from a sample of the line voltage applied to the indicator oscilloscope. Controls are provided in this circuit to select trigger level, slope, coupling and source. The A Trigger Generator circuit also includes the Internal Trigger Preamp stage. The Internal Trigger Preamp stage amplifiers the internal trigger signal from the vertical plug-in unit to the level necessary to drive the A and B Trigger Generator circuits. Fig. 3-2 shows a detailed block diagram of the A Trigger Generator circuit. A schematic of this circuit is shown on diagram 1 at the rear of this manual.

Internal Trigger Preamp

The internal trigger signal from the vertical plug-in unit is connected to the Internal Trigger Preamp stage through terminals 13 and 15 of the interconnecting plug. The internal trigger signal at terminals 13 and 15 is push-pull signal and it is connected to the bases of Q14A and Q14B. Since the push-pull signal is of opposite polarity at the bases of Q14A and Q14B, it will have the opposite effect on each of these transistors. For example, if the signal at the base of Q14A is positive-going, it increases the current through this transistor. At the same time the signal at the base of Q14B is negative-going and it decreases the current through Q14B. The common-emitter coupling of Q14A and Q14B allows Q14A to aid in the current change through Q14B to produce a larger resultant change at the collector of Q14B. The Int Trig DC Level adjustment R7, in the base circuit of Q14A sets the quiescent DC output level of the Internal Trigger Preamp stage so the sweep will be triggered at the zero-volt level of the displayed signal when the A or B TRIG LEVEL control is centered.

The amplified trigger signal at the collector of Q14B is connected to the base of Q23A, and in slightly attenuated form to the base of Q23B through R21. Q23A and Q23B are connected as emitter followers in the complementary symmetry amplifier[1] configuration. This configuration overcomes the basic limitation of emitter followers; inability to provide equal response to both positive- and negative-going portions of a signal. This is remedied in this configuration by using an NPN transistor for one emitter follower, Q23A, and a PNP transistor for the other emitter follower, Q23B. Since Q23A is

[1]Lloyd P. Hunter (ed.), "Handbook of Semiconductor Electronics," second edition, McGraw-Hill, New York, 1962. pp. 11-57—11-62.

an NPN transistor, it responds best to positive-going signals and Q23B, being a PNP transistor, responds best to negative-going signals. The result is a circuit which has equally fast response to both positive- and negative-going trigger signals while maintaining a low output impedance. The amplified internal trigger signal from the emitters of Q23A and Q23B is connected to the internal position of the A and B SOURCE switches through R27A and R27B.

Trigger Source

The A SOURCE switch, SW30A, selects the source of the A trigger signal. Three trigger sources are available; internal, line and external. A fourth position of the A SOURCE switch provides 10 times attenuation for the external trigger signal.

The internal trigger signal is obtained from the vertical plug-in unit through the Internal Trigger Preamp stage. This signal is a sample of the signal applied to the vertical plug-in unit. The line trigger signal is obtained from voltage divider R24-R25 connected between 6.3 volts AC and ground. This sample of the line frequency, about three volts RMS, is coupled to the A Trigger Generator circuit in the LINE position of the A SOURCE switch. The A COUPLING switch should not be in the AC LF REJ position when using this trigger source, as the signal will be blocked by the LF reject circuit.

External trigger signals applied to the A TRIG IN connector can be used to trigger the sweep in the EXT and EXT ÷ 10 positions of the A SOURCE switch. Input resistance at DC is about one megohm paralleled by about 30 picofarads in both external positions. However, when the A COUPLING switch is set to AC LF REJ, a 100-kilohm resistor, R30B is connected in parallel with the one-megohm input resistor, R30A, to provide attenuation of low-frequency signals. This provides an external input resistance of about 91 kilohms in this A COUPLING switch position. In the EXT÷10 position, a 10× frequency compensated attenuator is connected into the input circuit. This attenuator reduces the input signal amplitude 10 times to allow more A TRIG LEVEL conrol range. Input RC Characteristics in this position are about 10.1 megohm × 5 picofarads.

Trigger Coupling

The A COUPLING switch, SW30B, offers a means of accepting or rejecting certain components of the trigger signal. In the AC and AC LF REJ positions of the A COUPLING switch, the DC component of the trigger signal is blocked by coupling capacitors C30A or C30B. Low frequency components below about 60 hertz are attenuated in the AC position and below about 50 kilohertz in the AC LF REJ position. The DC position passes all signals from DC to 100 megahertz.

Input Cathode Follower

The Input Cathode Follower, V33, provides a high input impedance for the trigger signal. It also provides isolation between the A Trigger Generator circuit and the trigger signal source. Diodes D30 and D31 protect V33 if excessive input voltage is applied to the A TRIG IN connector. Diode D31 limits the positive excursion of the grid signal to about +15.5 volts and diode D30 limits the negative excursion to about —15.5 volts. The output signal at the cathode of V33 is connected to the Slope Comparator stage through R38.

Slope Comparator

Q44A and Q44B are connected as a difference amplifier (comparator)[2] to provide selection of the slope and level at which the A sweep is triggered. The reference voltage for the comparator is provided by the A TRIG LEVEL control R41, through emitter follower Q43. The A TRIG LEVEL control varies the base level of Q44B to select the point on the trigger signal where triggering occurs. Emitter follower Q43 isolates the A TRIG LEVEL control from the Slope Comparator stage to reduce the loading on the A TRIG LEVEL control and provide more linear trigger level adjustment. Diode D33 protects Q44A during the warmup time of V33 by limiting the negative excursion at the cathode of V33 to about —15.5 volts until the heater of V33 reaches operating temperature.

R44 establishes the emitter current of both Q44A and Q44B. The transistor with the most positive base controls the conduction of the comparator. For example, assume that the trigger signal at the cathode of V33 is positive-going and Q44A is forward biased. The increased current flow through R44 produces a larger voltage drop and the emitters of both Q44A and Q44B go more positive. A more positive voltage at the emitter of Q44B reverse biases this transistor since its base is held at the voltage set by the A TRIG LEVEL control and its collector current decreases. At the same time, Q44A is forward biased and its collector current increases. Notice that the signal currents at the collectors of Q44A and Q44B are opposite in phase. The sweep can be triggered from either the negative-going or positive-going slope of the input trigger signal by producing the trigger pulse from the signal at the collector of Q44B for — slope operation, or the signal at the collector of Q44A for + slope operation.

When the A TRIG LEVEL control is set to 0 (midrange), the base of Q44B is at about two volts positive. This corresponds to a zero-volt level at the grid of V33. The voltage drop of D44B and the base-emitter junction of Q44B sets the cathodes of D44A and D44B at about one volt positive. Since the base of Q44A must be about one volt more positive than the cathode level of D44A and D44B before Q44A and D44A are forward biased, the comparator switches around the zero-volt level of the trigger signal (zero-volt level of trigger signal corresponds to about one volt positive at this point). As the A TRIG LEVEL control is turned clockwise toward +, the voltage at the base of Q44B becomes more positive. This increases the current flow through R44 to produce a more positive voltage at the cathodes of D44A and D44B. Now the trigger signal must rise more positive before Q44A is biased on. The resultant CRT display starts at a more positive point on the displayed signal. When the LEVEL control is in the — region the effect is the opposite, to produce a resultant CRT display which starts at a more negative point on the trigger signal.

The slope of the input signal which triggers the sweep is determined by the A SLOPE switch, SW30C. When the A SLOPE switch is set to the — position, the collector of Q44A is connected to the +15-volt supply through D44C, R47 and R46. The anode of D44D is grounded and this diode is reverse biased. Now the collector current of Q44B must flow through D45B, R48, the parallel combination of D55 and R45-L45, and R46 to the +15-volt supply (see Fig. 3-3). Since the output pulse from the A Trigger Generator circuit is

[2]Phillip Cutler, "Semiconductor Circuit Analysis", McGraw-Hill, New York. pp. 365-372.

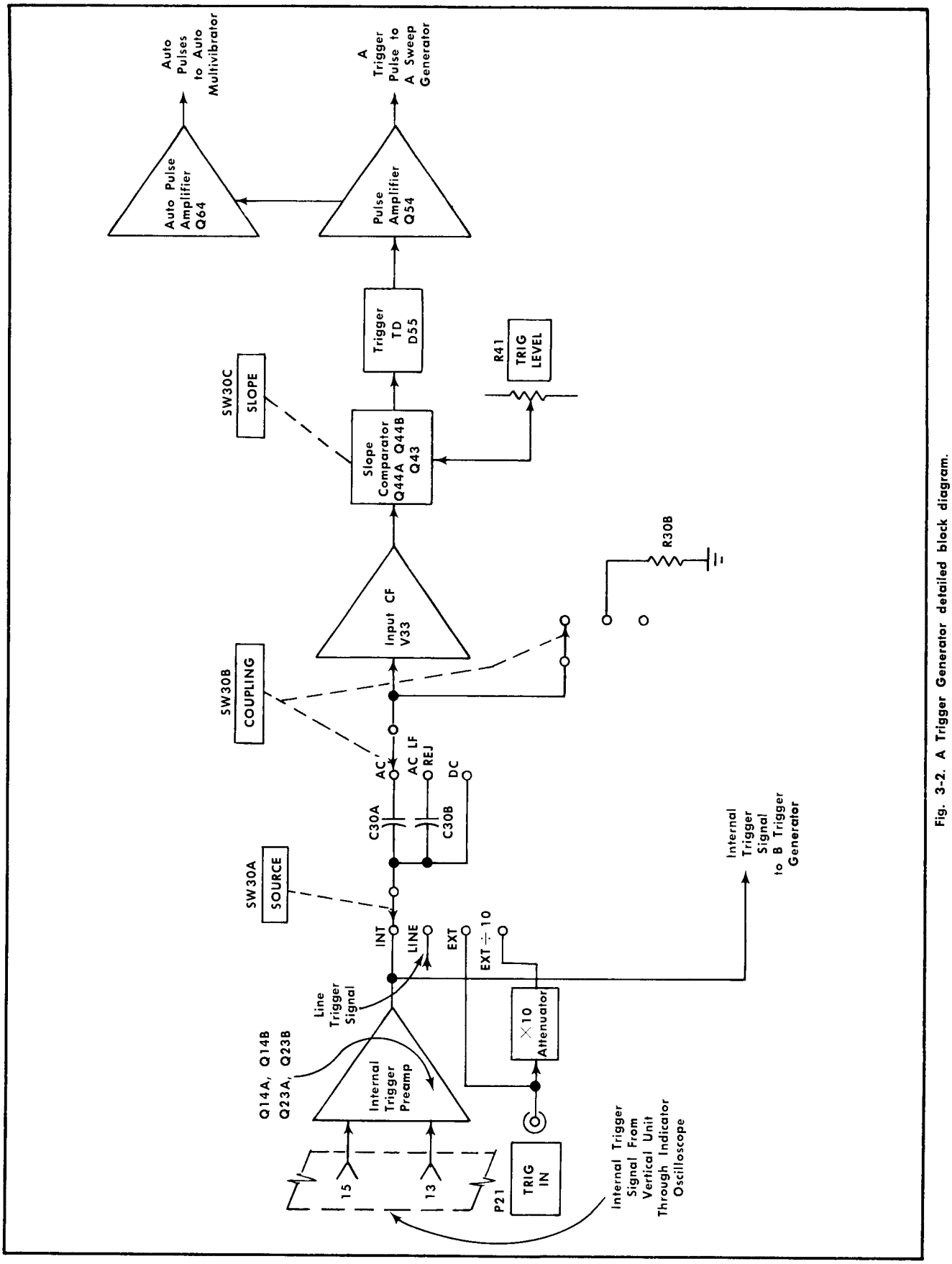

Fig. 3-2. A Trigger Generator detailed block diagram.

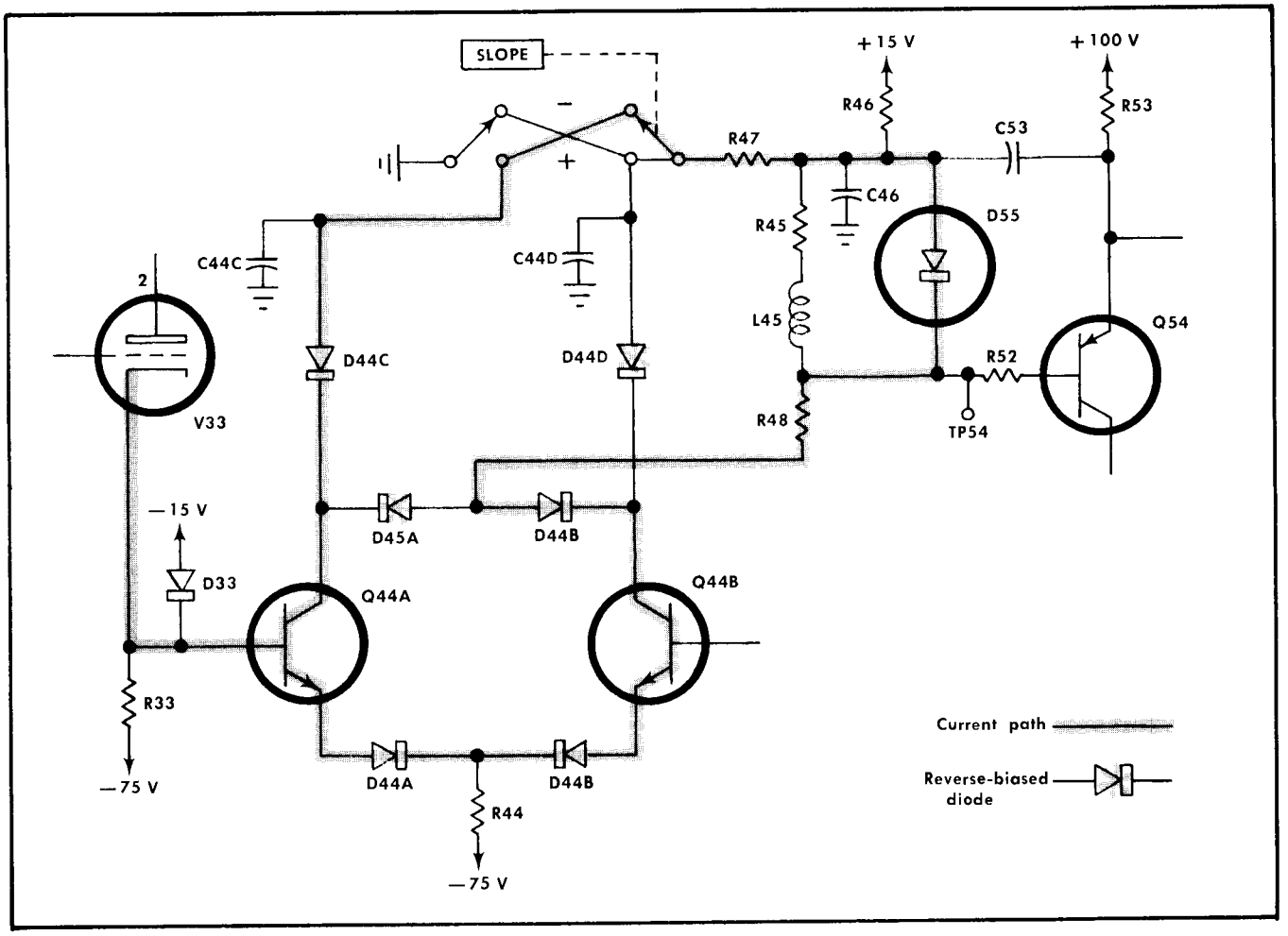

Fig. 3-3. Trigger path for negative-slope triggering (simplified diagram).

derived from the negative-going portion of the signal applied to the Trigger TD stage, the sweep is triggered on the negative-going portion of the input trigger signal (signal applied to Trigger TD stage is in phase with the input signal for — slope triggering). When the A SLOPE switch is set to +, conditions are reversed (see Fig. 3-4). Q44B is connected to the +15-volt supply through D44D, R47 and R46. The anode of D44C is grounded to divert the collector current of Q44A through the Trigger TD stage. The signal applied to the Trigger TD stage is now 180° out of phase with the input trigger signal, so the sweep is triggered on the positive-going portion of the input signal.

Trigger TD

The Trigger TD stage shapes the output of the Slope Comparator to provide a trigger pulse with a fast leading edge. Tunnel diode D55[3] is quiescently biased so it operates in its low-voltage state. The current from one of the transistors in the Slope Comparator stage is diverted through the Trigger TD stage by the A SLOPE switch. As this current increases due to a change in the trigger signal, tunnel diode D55 switches to its high-voltage state. L45 opposes the sudden change in current which allows more current to pass through D55 and switch it more quickly. As the current flow stabilizes, L45 again conducts the major part of the current. However, the current through D55 remains high enough to hold it in its high-voltage state. The circuit remains in this condition until the current from the Slope Comparator stage decreases due to a change in the trigger signal applied to the input. Then, the current through D55 decreases and it reverts to its low-voltage state.

Pulse Amplifier

The trigger signal from the Trigger TD stage is connected to the base of the Pulse Amplifier, Q54, through R52. The trigger pulse at this point is basically a negative-going pulse with a fast rise. The width of the pulse depends upon the waveshape of the input signal and the setting of the A TRIG LEVEL control. The negative-going pulse at the base of Q54 drives it into heavy conduction and the resulting current increase flows through R55, C54, Q54, C53 and R46. Due to the short time constants of the RC networks involving C53 and C54, the current of Q54 quickly returns to the level determined by resistors R53, R54 and R55. The resultant signal at the collector of Q54 is a positive-going fast-rise pulse with the width determined by the time constants of the RC networks in the circuit. This positive-going trigger pulse is connected to D120 in the A Sweep Generator circuit through R54. Diodes D56 and D57 limit the voltage change of the trigger

[3]Jacob Millman and Herbert Taub, "Pulse, Digital and Switching Waveforms", McGraw-Hill, New York, 1965. pp. 452-455.

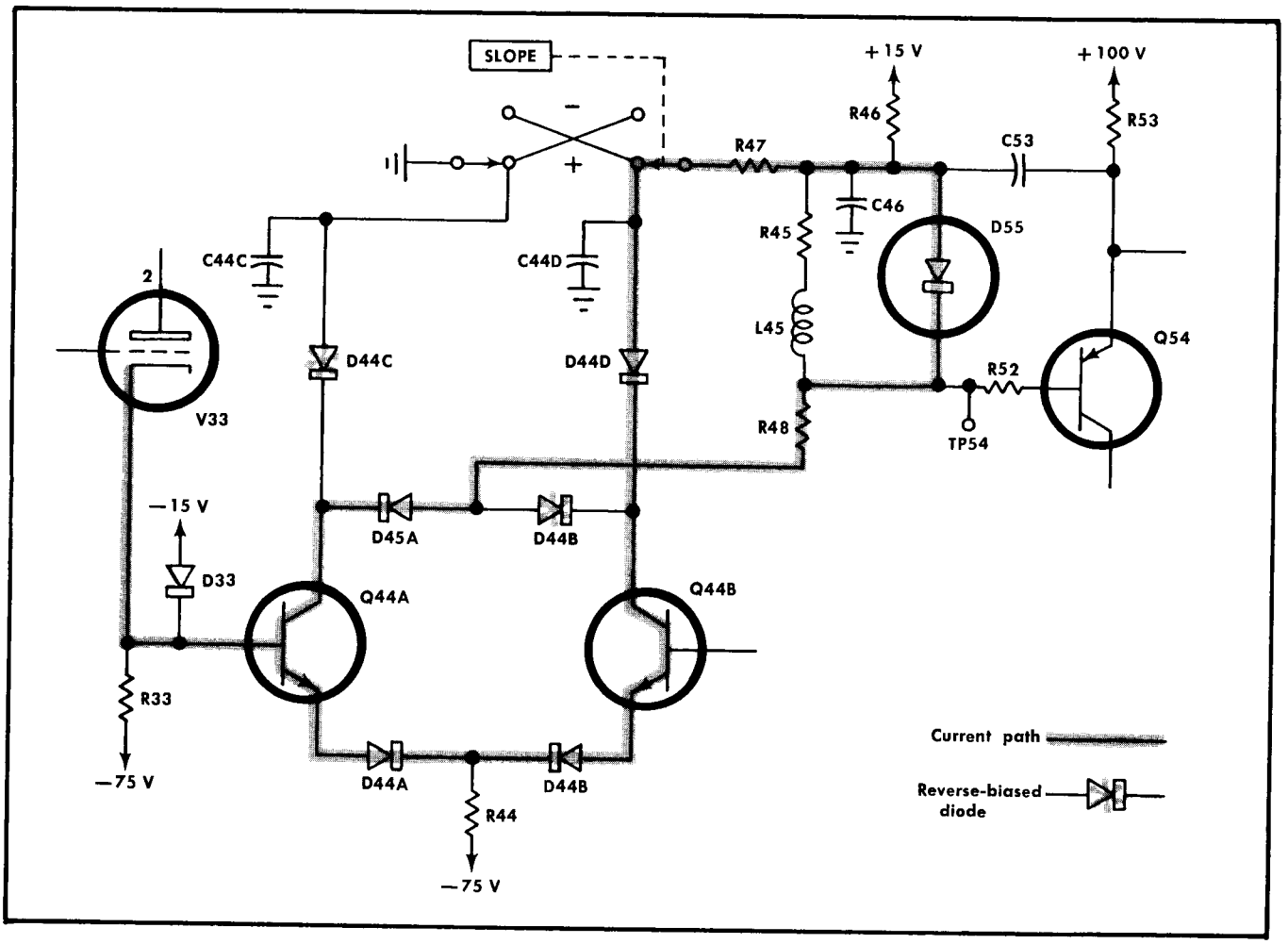

Fig. 3-4. Trigger path for positive-slope triggering (simplified diagram).

pulse between about −0.5 and +0.5 volts. A simultaneous negative-going pulse with the same width as the trigger pulse at the collector is available at the emitter of Q54. This pulse is connected to the Auto Pulse Amplifier stage.

Auto Pulse Amplifier

The negative-going pulse at the emitter of Q54 is connected to the base of Q64 through R61. This stage is similar to the Pulse Amplifier stage in that an output pulse is available from both the collector and emitter. Both signals are connected to the Auto Multivibrator stage in the A Sweep Generator circuit; the positive-going pulse at the collector through C102 and the negative-going pulse at the emitter through C63.

A SWEEP GENERATOR

General

The A Sweep Generator circuit produces a sawtooth voltage which is amplified by the Horizontal Preamp circuit to provide the sweep for the indicator oscilloscope. This output signal is generated on command (trigger pulse) from the A Trigger Generator circuit. This A Sweep Generator circuit also produces an unblanking gate to unblank the CRT of the indicator oscilloscope during A sweep time. In addition, this circuit produces several control signals for other circuits within this instrument and several output signals to the front-panel connectors. Fig. 3-5 shows a detailed block diagram of the A Sweep Generator circuit. A schematic of this circuit is shown on diagram 2 at the rear of the manual.

The TRIG MODE switch allows four modes of operation. In the FREE RUN position, the sweep free runs independent of any trigger signal. In the AUTO position, a stable display is presented when the LEVEL control is correctly adjusted and a trigger signal is available. However, when a trigger pulse is not present, the sweep free runs at the repetition rate selected by the A TIME/CM switch. Operation in the NORM position is much the same as AUTO except that a display is presented only when an adequate trigger pulse is present. In the SINGLE SWEEP position, operation is also similar to NORM except that the sweep is not recurrent. The following circuit description is given with the TRIG MODE switch set to NORM. Differences in operation for the other modes are then discussed later.

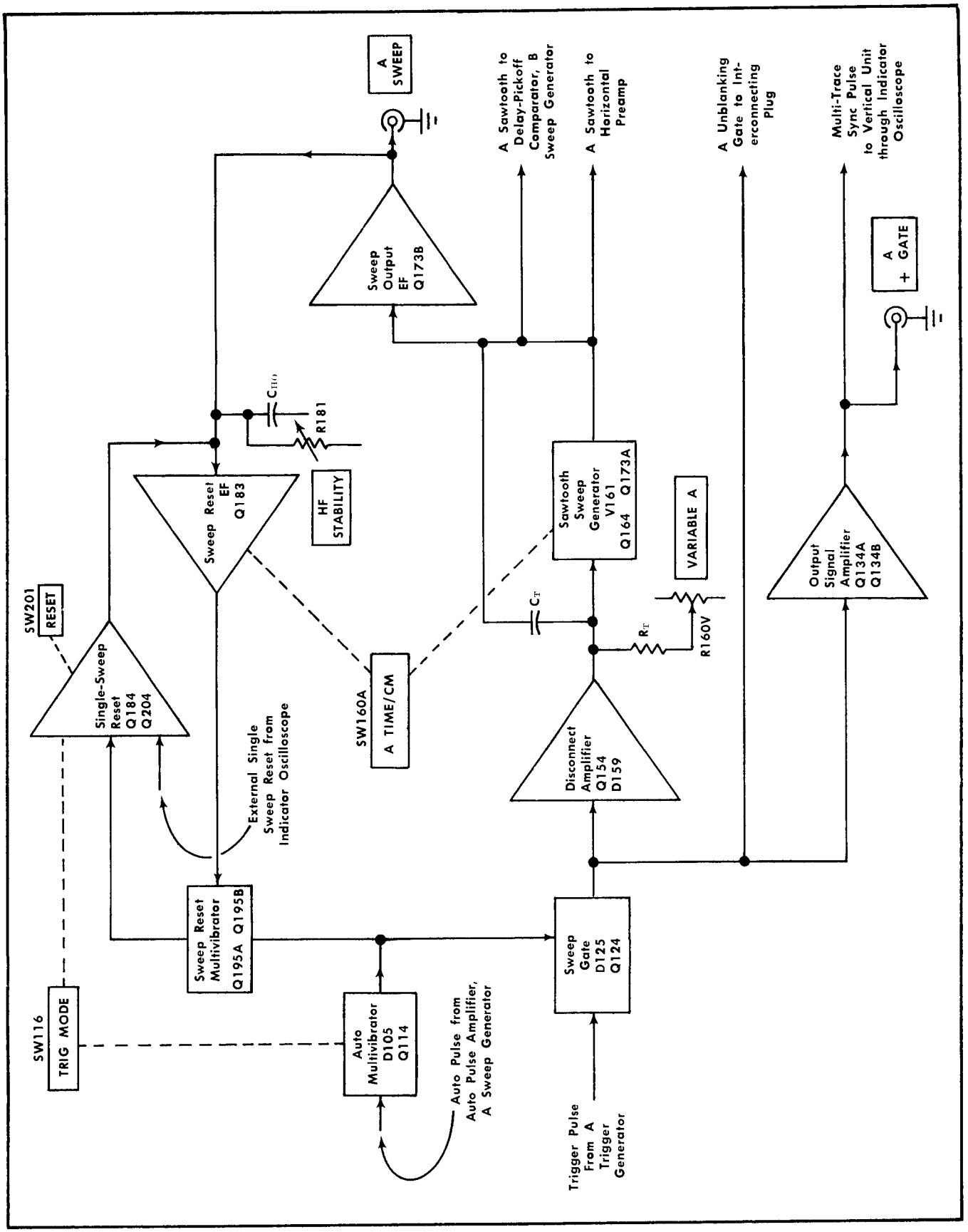

Fig. 3-5. A Sweep Generator detailed block diagram.

Normal Trigger Operation

Sweep Gate. The positive-going trigger pulse generated by the A Trigger Generator circuit is applied to the Sweep Gate stage through D120 and D121. Quiescently, current is flowing through R120-D121 and R118-D118. This holds tunnel diode D125 in its low-voltage state. When the positive-going trigger pulse is applied through D120, D121 is reverse biased. The current that was flowing through D121 and R120 now flows through D125 and it rapidly switches to its high-voltage state where it remains until reset by the Sweep Reset Multivibrator stage at the end of the sweep. The positive-going level at the anode of D125 is connected to the base of Q124 through C122 and R122. Q124 is turned on and its collector goes negative. This negative-going step is connected to the Disconnect Amplifier stage through C127 and R127 and the Output Signal Amplifier stage through C130 and R130. The signal at the collector of Q124 also provides the A unblanking gate.

Disconnect Amplifier. Q154 is quiescently conducting and it forward biases diode D158 and disconnect diode D159. The disconnect diode, D159, is quiescently conducting current through the Timing Resistor R160, VARIABLE A control R160V and A Swp Cal adjustment R160W. The negative-going gate signal from Q124 turns Q154 off and its collector goes negative. When the collector of Q154 goes negative, the disconnect diode is reverse biased and the quiescent current flow is interrupted. Now the timing current through the Timing Resistor begins to charge the Timing Capacitor, C160, and the sweep starts to run up. The disconnect diode is a fast turn-off diode with low reverse leakage. These characteristics improve the linearity at the start of the sweep and prevent the disconnect diode from affecting the timing current.

The Delay Start adjustment, R150, is adjusted to set the quiescent level at the grid of V161 to about zero volts (through D159) and the quiescent A sawtooth output level to about +2.4 volts (through D158 and R158) to provide a consistent starting point for the A sweep. The voltage level set by R150 is also connected to the Disconnect Amplifier in the B Sweep Generator circuit so it starts at the same point on the CRT also. Diode D155 protects disconnect diode D159 by preventing the collector level of Q154 from going more negative than about —0.6 volts when it is off.

Sawtooth Sweep Generator. The basic sweep generator circuit is a Miller Integrator circuit.[4] When the current flow through the disconnect diode is interrupted by the sweep gate signal, the Timing Capacitor, C_T, begins to charge through the Timing Resistor, VARIABLE A control and A Swp Cal adjustment. The Timing Capacitor and Resistor are selected by the A TIME/DIV switch to provide the various sweep rates listed on the front panel. Diagram 6 shows a complete diagram of the A TIME/DIV switch. The A Swp Cal adjustment (see Timing Switch diagram) allows calibration of this circuit for accurate sweep timing. The VARIABLE A control, R160V, (see Timing Switch diagram), provides continuously variable, uncalibrated sweep rates by varying the charge rate of the Timing Capacitor.

As the Timing Capacitor begins to charge negative towards the voltage applied to the Timing Resistor, the grid of V161 goes negative also. This produces a negative-going change at the cathode of V161 which is coupled to the base of Q164 through R163. Q164 ampifies and inverts the signal at the cathode of V161 to produce a positive-going sawtooth output. D163 clamps the cathode of V161 at about —0.5 volts to protect Q164 during the warmup time of V161. The sawtooth signal at the collector of Q164 is connected to the base of emitter follower Q173A. The positive-going sawtooth at the emitter of Q173A provides the A sawtooth output signal to the Horizontal Amplifier circuit and the Delay Pickoff Comparator stage in the B Sweep Generator circuit through R172 and R173. To provide a linear charge rate for the Timing Capacitor, the sweep output signal is also connected to the positive side of the Timing Capacitor. This feedback provides a constant charging potential for C160 which maintains a constant charge rate to produce a linear sawtooth output signal. The output voltage continues to go positive until the circuit is reset through the Sweep Reset Multivibrator.

Sweep Output Emitter Follower and Sweep Reset Emitter Follower. The positive-going A sawtooth output signal is connected to the base of the Sweep Output Emitter Follower stage, Q173B, through R177. The positive-going sawtooth at the emitter of Q173B provides the output signal at the A SWEEP connector on the front panel. The signal at the emitter of Q173B is also connected to the Holdoff Capacitor, C180 (C_{HO}) through diodes D180 and D181. As the sawtooth output rises positive, the Holdoff Capacitor charges positive and the base and emitter of the Sweep Reset Emitter Follower, Q183, rise positive also. This positive-going change is connected to the anode of D183.

Sweep Reset Multivibrator. The positive-going signal at the emitter of Q183 is connected to D183. This diode is quiescently reverse biased at the start of the sweep. As the sweep runs up, the anode of D183 is pulled positive and it is forward biased at a level about 0.5 volts more positive than the base level of Q195B. Then the positive-going sweep signal from the Sweep Reset Emitter Follower is connected to the base of Q195B. Q195A and Q195B are connected as a Schmitt bistable multivibrator[5]. Quiescently at the start of the sweep, Q195A is off and Q195B is conducting to produce a positive level at its collector. This positive level allows the Sweep Gate tunnel diode, D125, to be switched to produce a sweep as discussed previously. When D183 is forward biased by the positive-going signal from Q183, the base of Q195B goes positive and when the base level of Q195B exceeds the base level of Q195A (Q195A base level fixed by divider R190-R191), Q195B is reverse biased. Then Q195A comes into conduction and the collector level of Q195B goes negative to switch D125 back to its low-voltage state through R197 and R125-L125. D125 is held in its low-voltage state so it cannot accept incoming trigger pulses until after the Sweep Reset Multivibrator stage is reset. This ends the Sweep Gate stage output pulse and the A unblanking gate level rises positive to blank the indicator oscilloscope CRT. The positive-going change at the collector of Q124 forward biases Q154 in the Disconnect Amplifier stage to rapidly discharge the Timing Capacitor and pull the grid of V733 rapidly negative to its original level. This produces the retrace portion of the sawtooth signal. The Sawtooth Sweep Generator stage is now ready to produce another sweep as soon as the Sweep Reset Multivibrator stage is reset and another trigger pulse is received.

When Q195B is turned off to end the sweep, it remains off for a period of time to establish a holdoff period and allow

[4]Ibid., pp. 540-548.

[5]Ibid., pp. 389-394.

all circuits to return to their original conditions before the next sweep is produced. The holdoff time is determined by the discharge time of the Holdoff Capacitor, C180. As the sweep runs up, C180 is charged through D180 and D181. At the end of the sweep, D180 is reverse biased by the negative-going retrace portion of the sawtooth signal and the Holdoff Capacitor begins to discharge through R180 and R181. As the Holdoff Capacitor discharges, the emitter level of Q183 drops negative also. When Q195A comes on, its conduction raises the base level of Q195B positive through R193 and R199. This holds D183 reverse biased to block any changes at the emitter of Q183. However, as the emitter of Q183 falls low enough to forward bias D193, the current through R193, R199, R185 and R184 increases. This pulls the base of Q195B more negative until it is biased on. The emitter coupling between Q195A and Q195B turns Q195A off to end the holdoff period. Now the Sweep Reset Multivibrator has returned to its original condition and the collector of Q195B rises positive. The bias on the Sweep Gate tunnel diode D125 returns to a level that allows it to accept the next trigger pulse (D125 is enabled). The Holdoff Capacitor, C180, is changed by the A TIME/DIV switch to provide the correct holdoff time for the various sweep rates. Diagram 6 shows a complete diagram of the A TIME/DIV switch.

The HF STAB control, R181, varies the discharge rate of the Holdoff Capacitor by about 10% to provide a stable display at fast sweep rates. This change in holdoff allows sweep synchronization for less display jitter at the faster sweep rates. This control has little effect at slow sweep rates.

Output Signal Amplifier. The negative-going gate signal at the collector of Q124 when the Sweep Gate stage receives a trigger pulse is connected to the base of Q134A through R130 and C130. This produces a positive-going signal at the collector of Q134A which provides the output signal at the A +GATE output connector on the front panel. Diode D133 clamps the collector of Q134A to prevent the A +GATE signal from going more than about 0.5 volts more negative than ground. A negative-going gate signal is also produced at the emitter of Q134A. This negative-going signal is connected to the base of Q134B through C136. However, since Q134B is quiescently biased to cutoff, this negative pulse has no effect on Q134B. When the gate signal at the collector of Q124 returns positive to the quiescent level at the end of the sweep, the A +GATE output signal at the collector of Q134A drops negative to its quiescent level also. At the same time the emitter of Q134A rises positive. This positive-going step is differentiated by C136 and connected to the base of Q134B. Q134B is forward biased by the positive-going pulse at its base and its collector goes negative. This negative-going pulse provides the multi-trace sync pulse to the vertical plug-in unit through the associated indicator oscilloscope. The duration of the multi-trace sync pulse is short, due to the fast time constants in the circuit.

Free Run Operation

In the FREE RUN position of the TRIG MODE switch, D118 is reverse biased by the +15 volts applied to its cathode through R117. In the NORM mode of operation, D118 and R118 carry some of the quiescent current from Q195B before a trigger pulse is received. In FREE RUN mode, however, this extra current from Q195B must flow through tunnel diode D125. This current is sufficient to switch D125 to its high-voltage state immediately after the Sweep Reset Multivibrator resets following the holdoff period. The incoming trigger pulses have no affect on the sweep repetition rate.

Auto Mode Operation

Operation of the A Sweep Generator circuit in the AUTO position of the TRIG MODE switch is the same as for the NORM position when a trigger pulse is present. However, when a trigger pulse is not present, a free-running reference trace is produced as in the FREE RUN position. This occurs as follows:

The positive-going auto pulse at the collector of Q64 in the Auto Pulse Amplifier stage (A Trigger Generator circuit) is connected to the Auto Multivibrator through C102. Quiescently, when there is no trigger signal present, tunnel diode D105 is in its high-voltage state and Q114 is biased off. D114 is conducting through R116 and the cathode of D118 is raised more positive than its anode to hold it reverse biased. The circuit operates as just described for FREE RUN operation with the current from Q195B switching D125 to its high-voltage state immediately after the Sweep Reset Multivibrator resets following the holdoff period.

When the unit is correctly triggered, the positive-going auto pulse through C102 forward biases D102 and diverts the current from tunnel diode D105 and it switches to its low-voltage state. This drives Q114 rapidly into saturation; its collector drops negative and D114 is reverse biased. With D114 reverse biased, D118 can conduct through the Sweep Reset Multivibrator stage. Now, when the Sweep Reset Multivibrator stage resets after the holdoff period, the Sweep Gate tunnel diode D125 is enabled so that it can switch to its high-voltage state when the next trigger pulse arrives.

When Q114 is driven into saturation, C114 is discharged through R114. D113 is forward biased to form a parallel collector current path for Q114; R114-D113-R113 is parallel with R116. When the auto pulse through C102 ends, D102 is again reverse-biased and tunnel diode D105 reverts to the high-voltage state. Q114 turns off, but its collector cannot rise positive immediately, since it must wait for C114 to recharge. The charge path for C114 is through the parallel combination of D113-R113 and R114-R116. As the charge on C114 reaches about −7 volts, D113 becomes reverse biased and the charge path for C114 is only through R114-R116 (D113 anode level set by divider R106-R112-R113 between −75 and +15 volts). After about 80 milliseconds, C114 recharges to a level that forward biases D114. Now conditions become similar to those for FREE RUN operation. However, if the auto pulses (produced from applied trigger signal) are recurrent with a period less than about 80 milliseconds, D105 will be reset to its low state and C114 discharged again. Then the operation of the Sweep Gate tunnel diode is similar to NORM operation to produce a triggered display.

Single Sweep Operation

Operation of the Sweep Generator in the SINGLE SWEEP position of the TRIG MODE switch is similar to operation in the other modes. However, after one sweep has been produced, the Sweep Reset Multivibrator stage does not reset. All succeeding trigger pulses are locked out until the RESET button is pressed.

In the SINGLE SWEEP position of the TRIG MODE switch, +15 volts is connected to the base of Q183 and anode of D181 through R182. This clamps the base of Q183 at about +4.5 volts, which is not positive enough to reset the Sweep Reset Multivibrator. The HOLDOFF Capacitor, C180, cannot discharge any farther. Therefore, the Sweep Gate tunnel diode is held in a condition where it cannot accept trigger pulses. When the RESET button, SW201, is pressed, current flows through B200 and it ignites. The positive-going voltage change across R200 when B200 ignites is differentiated by C202 and the fast-rise, positive-going pulse is connected to the base of Q204. Diode D200 protects Q204 by preventing its base from going more negative than about —0.5 volts. A positive-going remote reset pulse applied to pin F of the connector on the rear panel of a compatible indicator oscilloscope is connected to this unit through terminal 27 of the interconnecting plug. This feature can be used to reset the A Sweep Generator circuit from a remote location.

The positive-going pulse at the base of Q204 produces a negative-going change at its collector. This level is connected to the base of Q183 through C204 and it pulls the base of Q195B negative through D193, R193 and R199 (in a similar manner to that described for the holdoff capacitor discharge for normal operation). When the base of Q195B is negative enough to bias it on, Q195B comes into conduction and Q195A turns off. Now the Sweep Gate tunnel diode, D125, is enabled since its anode is returned to a level where it can accept a trigger pulse. The negative-going change at the base of Q195B is also connected to the emitter of Q184 through R185. This turns Q184 on and its collector goes negative. Current flows through B186 and it ignites to indicate that the A Sweep Generator can be triggered when the next trigger pulse is received. Q184 and the RESET light, B186, remain on until Q195B turns off again at the end of the next sweep.

B TRIGGER GENERATOR

General

The B Trigger Generator circuit is basically the same as the A Trigger Generator circuit, so only the differences between the two circuit are discussed here. Portions of the circuit not described in the following discussion operate in the same manner as for the A Trigger Generator circuit. Fig. 3-6 shows a detailed block diagram of the B Trigger Generator circuit. A schematic of this circuit is shown on diagram 3 at the rear of this manual.

Trigger Source

The B SOURCE switch, SW70A, provides only two positions for selecting the B trigger signal; internal and external. The internal trigger signal is obtained from the Internal Trigger Preamp stage in the A Trigger Generator Circuit. External trigger signals applied to the B TRIG IN OR EXT INPUT connector can provide the triggering signal in the EXT position. The input resistance at DC is about one megohm paralleled by 30 picofarads.

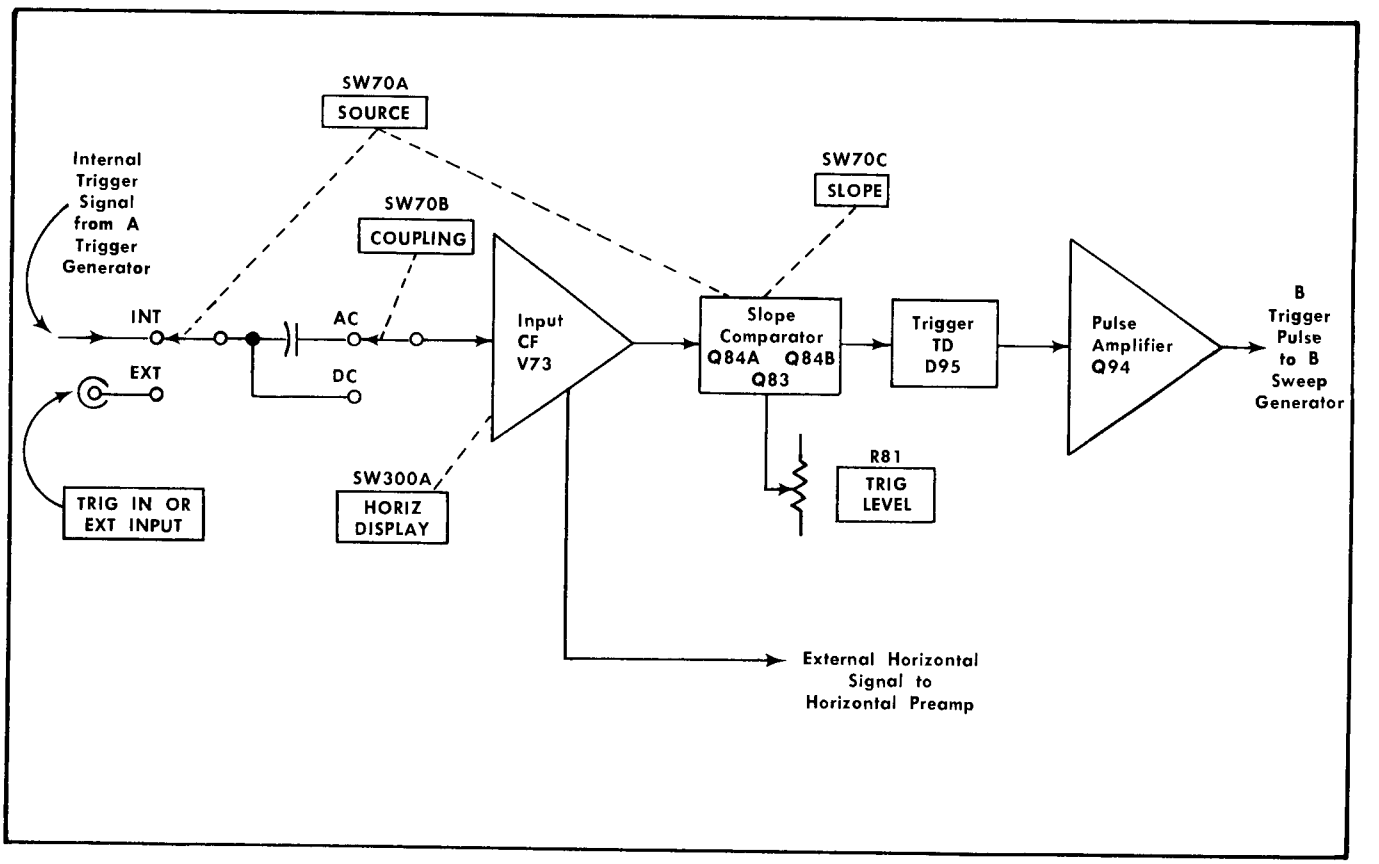

Fig. 3-6. B Trigger Generator detailed block diagram.

Trigger Coupling

The B COUPLING switch, SW70B, provides AC or DC coupling of the trigger signal. In the AC position, coupling capacitor C70A blocks the DC component of the trigger signal and low-frequency components below about 60 hertz are attenuated. The DC position passes all signals from DC to 100 megahertz.

Input Cathode Follower

The Input Cathode Follower stage, V73, operates in basically the same manner as described for the A Trigger Generator circuit. However, in the B Trigger Generator circuit, the HORIZ DISPLAY switch, SW300A, blocks the B Trigger Generator input signal in the modes where B triggering is not desired. In the B DLY'D BY A (not triggered), A INTEN BY B (not triggered) and A positions of the HORIZ DISPLAY switch, the cathode of V73 is connected to +100 volts through R75A and R76. At the same time, —15 volts is connected to the anodes of D73 and D74 through R75C-R75D and R75E-R75F-D75. This negative potential reverse biases both D73 and D74 and they block the B trigger signal. The current of V73 is diverted through R75A to maintain the correct current through V73.

In the A INTEN BY B (triggered) and B DLY'D BY A (triggered) positions of the HORIZ DISPLAY switch, +100 volts is connected to the anode of D73 through R75C and R76. This raises the anode potential of D73 positive enough to forward bias it and the B trigger signal can pass to the Slope Comparator to produce the trigger pulse. D74 remains reverse biased by the —15 volts applied to it through R75E-R75F-D75.

When the HORIZ DISPLAY switch is set to EXT INPUT, D74 is forward biased so the B trigger signal can pass to the Horizontal Preamp to produce horizontal deflection. The +100-volt potential is connected to the anode of D74 through D75-R75E-R76. D73 is again reverse biased by the —15 volt potential connected to its anode through R75C and R75D so it blocks the B trigger signal. D75 in series with D74 raises the quiescent DC level of the B trigger signal to about +7 volts so the external horizontal signal is centered on the display area when the horizontal position control is set near midrange.

Slope Comparator

The Slope Comparator in the B Trigger Generator circuit operates in basically the same way as described for the A Trigger Generator. However, an added network in the B Trigger Generator circuit allows the B TRIG LEVEL control to have about twice as much range in the EXT position of the B SOURCE switch as in the INT position. In the INT position, R82C limits the B TRIG LEVEL control current to the base of emitter follower Q83. Divider R82A-R82B adds enough current to the circuit at the base of Q83 so the B TRIG LEVEL control remains in the center of its range. When the B SOURCE switch is set to EXT, the divider R82A-R82B is disconnected. Also, R82C is effectively removed from the circuit and the B TRIG LEVEL control current is connected directly to the base of emitter follower Q83. Since R82C is not in the current path, more current reaches the base of Q83 to give the B TRIG LEVEL control about twice the range in the EXT positions as in the INT position.

Pulse Amplifier

The Pulse Amplifier stage in the B Trigger Generator circuit operates much as in the A Trigger Generator circuit. However, since there is no Auto Pulse Amplifier stage in the B Trigger Generator circuit, a pulse is available only at the collector of Q94. The output trigger pulse is applied to D220 in the B Sweep Generator circuit through C94-R94.

B SWEEP GENERATOR

General

The B Sweep Generator circuit is basically the same as the A Sweep Generator circuit. Only the differences between the two circuits are discussed here. Fig. 3-7 shows a detailed block diagram of the B Sweep Generator circuit. A schematic of this circuit is shown on diagram 4 at the rear of this manual.

Sawtooth Sweep Generator

The B sawtooth is produced in the same manner as the A sawtooth. The positive-going sawtooth at the collector of Q264 provides the B sweep signal through R265 and R259. This signal is also connected to the base of the Sweep Output and Reset EF through R265.

Sweep Output and Reset EF

Q273 performs both the sweep output emitter follower and sweep reset emitter follower functions in the B Sweep Generator circuit. The sawtooth connected to the base of Q273 from Q264 provides the output signal at the B SWEEP connector on the front panel through R274. It also provides the reset signal to the Sweep Reset Multivibrator through D273.

Delay-Pickoff Comparator

The Delay-Pickoff Comparator stage allows selection of the amount of delay from the start of the A sweep before the B Sweep Generator is turned on. This stage allows the start of B Sweep to be delayed between 0.30 and 10.30 times the setting of the A TIME/CM switch. Then, the B Sweep Generator is turned on and the display is presented at a sweep rate independent of the A Sweep Generator (determined by setting of the DELAYED SWEEP switch).

Q214A and B are connected as a voltage comparator. In this configuration, the transistor with the most positive base controls conduction. A dual transistor Q214 and a dual diode, D214, provide temperature stability for the comparator circuit. Reference voltage for the comparator circuit is provided by the DELAY TIME MULT dial, R211. The voltage supplied to this control is filtered by R210 and C210 to hold it constant and allow precise delay pickoff. The instrument is calibrated so that the major markings of the dial on R211 correspond to the major divisions of horizontal deflection on the graticule. For example, if the DELAY TIME MULT dial is set to 5.00, the B Sweep Generator is delayed five divisions of the A sweep

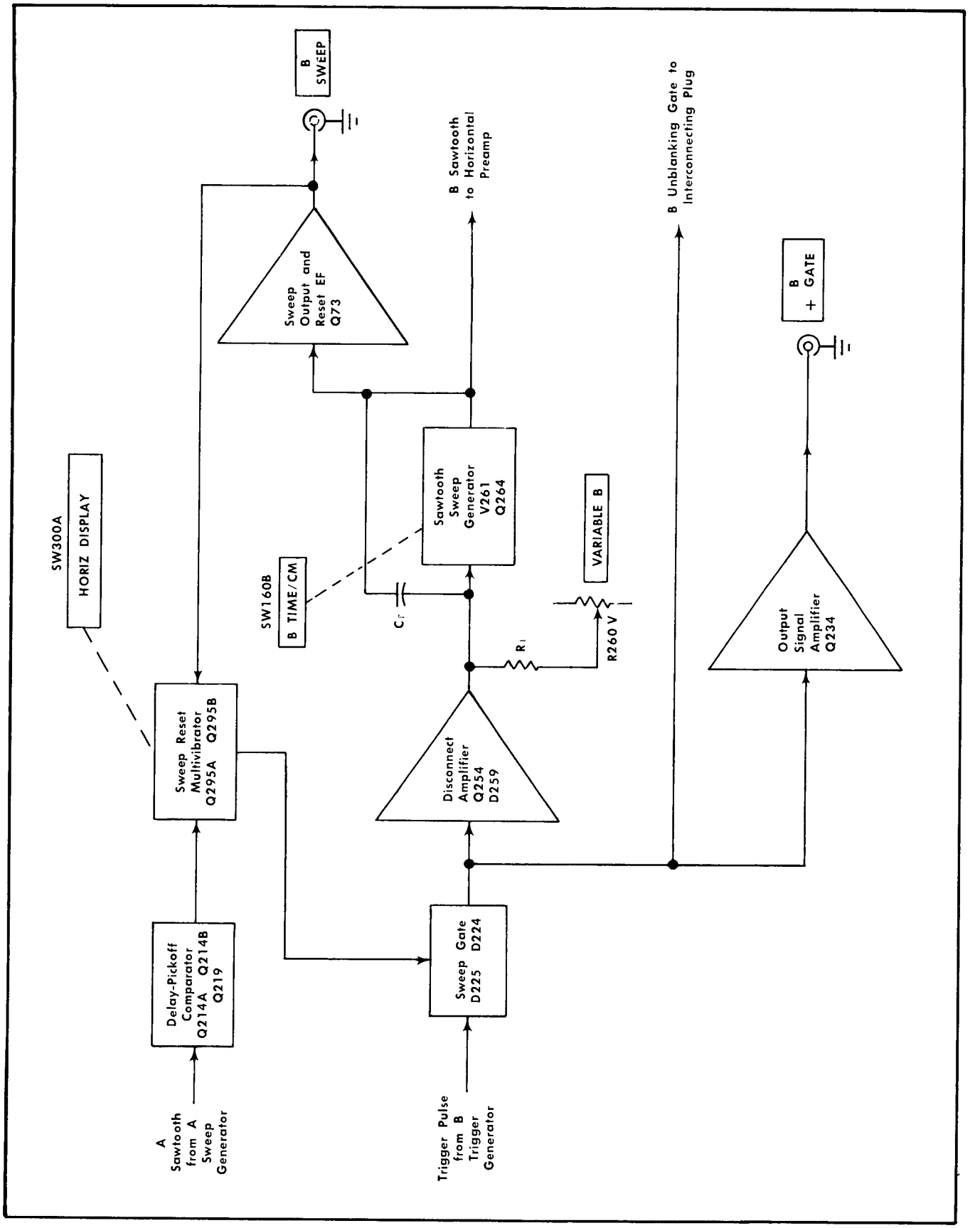

Fig. 3-7. B Sweep Generator detailed block diagram.

time before it can produce a sweep (B sweep delay time equals five times the setting of the A TIME/CM switch).

The output sawtooth from the A Sweep Generator circuit is connected to the base of Q214A. The quiescent level of the sawtooth biases Q214A off and its collector rises positive to about +17 volts. This level is connected to the base of Q219 and biases it off since the emitter of Q219 is clamped at about +15.5 volts by D219. With Q219 biased off there is no current for Q295A or Q295B, and they must be off also.

As the A sweep output sawtooth begins to run up, the base of Q214A also goes positive. When it goes more positive than the level at the base of Q214B (established by the DELAY TIME MULT dial), Q214A takes over conduction of the comparator and Q214B shuts off. This also raises the base of Q219 to about +15 volts and it turns on to become a stable current source for the Sweep Reset Multivibrator.

Sweep Reset Multivibrator

The basic B Sweep Reset Multivibrator configuration is the same as for A sweep. However, several differences do exist. Q219 in the Delay-Pickoff Comparator stage disconnects the current source for the B Sweep Reset Multivibrator and makes it inoperative until the A sawtooth reaches the level selected by the DELAY TIME MULT dial. Also, B sweep does not have a Holdoff Capacitor and associated circuit to reset the sweep after the retrace. Instead, the positive-going sweep from the B Sweep Output and Reset EF, Q273, is connected directly to the base of Q295B through D273. Diode D273 is forward biased when the sweep voltage at the emitter of Q273 rises about 0.5 volts more positive than the level at the base of Q295B as established by voltage divider R297-R298 between +100 volts and the collector of Q295A. Then Q295B turns on and its collector goes positive to switch the B Sweep Gate tunnel diode, D225, to its low-voltage state which resets the B sweep. Q295B remains on to hold the B Sweep Gate tunnel diode locked out until the A sweep ends. When the A sweep ends, Q219 is reverse biased by the quiescent level from Q214A and it interrupts the current source for Q295A and B. This locks out the B Sweep Gate tunnel diode until the A sawtooth reaches the selected level on the next A sweep.

When Q219 is turned on at the level selected by the DELAY TIME MULT dial, Q295B comes into conduction, since its base is held more negative than the base of Q295A. The collector of Q295B rises positive and the effect it has on the B Sweep Gate tunnel diode, D225, is determined by the HORIZ DISPLAY switch, SW300A. When SW300A is set to the A position, —15 volts is connected to the circuit through R296C. The value of R296C is such that most of the collector current from Q295B flows through R296C rather than through D225. The B Sweep Gate tunnel diode D225 is held in its low-voltage state throughout the entire A sweep time and it cannot be switched by the incoming trigger pulses. In the B DLY'D BY A and A INTEN BY B not-triggered positions (to left of A on front panel) and the EXT INPUT position, the —15-volt level is connected to the collector of Q295B through R296A. R296A is a larger resistor value than R296C and it shunts very little of the current from the B Sweep Gate tunnel diode D225. Enough of the Q295B current is available to D225 so it will switch to its high-voltage state immediately when the B Sweep Reset Multivibrator is turned on by the Delay-Pickoff Comparator stage. This produces a free-running B sweep similar to the FREE RUN mode in the A Sweep Generator. However, since the B Sweep is started at a fixed point on the A Sweep sawtooth, the display is relatively stable.

In the A INTEN BY B and B DLY'D BY A triggered positions of SW300A (to right of A on front panel), the current through the Sweep Gate tunnel diode D225 is determined by R296E. The resistance value of R296E is such that the Sweep Gate tunnel diode is enabled (but remains in its low-voltage state) when the Sweep Reset Multivibrator is turned on. Then, the next B trigger pulse can switch D225 to its high-voltage state and start the sweep (if the next B trigger occurs before he normal end of the A sweep). Since the B sweep is triggered by an incoming trigger pulse, this mode of operation produces the most stable delayed sweep display.

If the A sweep should end while the B sweep is still in progress, the negative-going retrace portion of the sawtooth at the base of Q214A will turn Q214A off and Q214B on when the base level of Q214A falls below the base level of Q214B. Then, the current source for the B Sweep Reset Multivibrator is interrupted by Q219 and the Sweep Gate tunnel diode is switched to its low-voltage state by the voltage level established at its anode by divider R296-R222-R223 from —15 volts to +15 volts.

Output Signal Amplifier

The Output Signal Amplfier stage in the B Sweep Generator circuit contains only one transistor, Q234. The signal at the collector of this transistor provides the output signal for the B +GATE connector on the front panel. There is no signal output at the emitter. R235 provides about the same load on the emitter of Q234 as the multi-trace sync network provides on the emitter of Q134A in the A Sweep Generator circuit.

HORIZONTAL PREAMP

General

The Horizontal Preamp circuit provides the output signal to the horizontal deflection system in the indicator oscilloscope. In all positions of the HORIZ DISPLAY switch except EXT INPUT, the horizontal deflection signal is a sawtooth from either the A Sweep Generator circuit or the B Sweep Generator circuit. In the EXT INPUT position, the horizontal deflection signal is obtained from the Input CF stage in the B Trigger Generator circuit. In addition, this circuit contains the horizontal magnifier circuit and the horizontal positioning network. Fig. 3-8 shows a detailed block diagram of the Horizontal Preamp circuit. A schematic of this circuit is shown on diagram 6 at the rear of this manual.

Input Signal EF

The input signal for the Horizontal Preamp is selected by the HORIZ DISPLAY switch, SW300A. In the triggered and not-triggered B DLY'D BY A positions of the HORIZ DISPLAY switch, the B sawtooth from the B Sweep Generator circuit is connected to the Input Signal EF. In the triggered and not triggered A INTEN BY B and A only positions, the A Sweep Generator output sawtooth is connected to the Input Signal EF. The intensified portion in the A INTEN BY B position is provided by the B unblanking pulse applied to the indicator

oscilloscope. An external signal from the B Trigger Generator circuit provides the horizontal deflection in the EXT INPUT position (see B Trigger Generator discussion for more details).

The selected input signal is connected to the base of Q343 through zener diodes D340 and D341 and R341. Zener diodes D340 and D341 drop the DC voltage level of the input signal without attenuating the signal, to provide the correct operating level for the circuit. The horizontal deflection signal is connected to the Paraphase Amplifier stage through D346. Zener diode D342 and R342 provide feedback to the base of Q343 for linear operation.

Positioning EF

The horizontal position controls in the indicator oscilloscope set a DC voltage level at the base of the Positioning EF, Q313, which determines the horizontal position of the CRT display. Q313 is connected as an emitter follower and the voltage output as its emitter is connected to the base of Q313 in the Paraphase Amplifier stage through D321.

Paraphase Amplifier

The input signal from Q343 is connected to the base of Q344 through D346. Q324 and Q344 are connected as a common-emitter phase inverter (paraphase amplifier).[6] This stage converts the single-ended input signal to a push-pull output signal, provides adjustment to set the normal and magnified gain, and provides a magnifier which increases the horizontal sweep rate 10 times. The input signal at the base of Q344 produces equal, but opposite output signals at the collectors of Q324 and Q344. For example, the positive-going sawtooth applied to the base of Q344 forward biases it and the current through Q344 increases. This increase in current produces a negative-going sawtooth output signal at the collector of Q344. At the same time, the increase in current through Q344 produces a positive-going sawtooth at its emitter. The emitters of Q344 and Q324 are coupled together through either the norm-gain network, R331-R332, or the mag-gain network, R333-R334-R335. Variable resistor R331, Norm Gain, is adjusted to provide calibrated horizontal sweep rates. The Mag Gain adjustment, R334, allows the magnified sweep rates to be calibrated. The resistance ratio between the norm-gain network and the mag-gain network is 10:1; this means that about 10 times more signal change at the emitter of Q344 reaches the emitter of Q324 in the ×10 (magnified) position of the MAG switch, SW300B, than in the OFF (normal) position. The positive-going sawtooth connected to the emitter of Q324 from Q344 reverse biases Q324 and its current decreases. This decrease in current produces a

[6] Lloyd P. Hunter (ed.), p. 11-94.

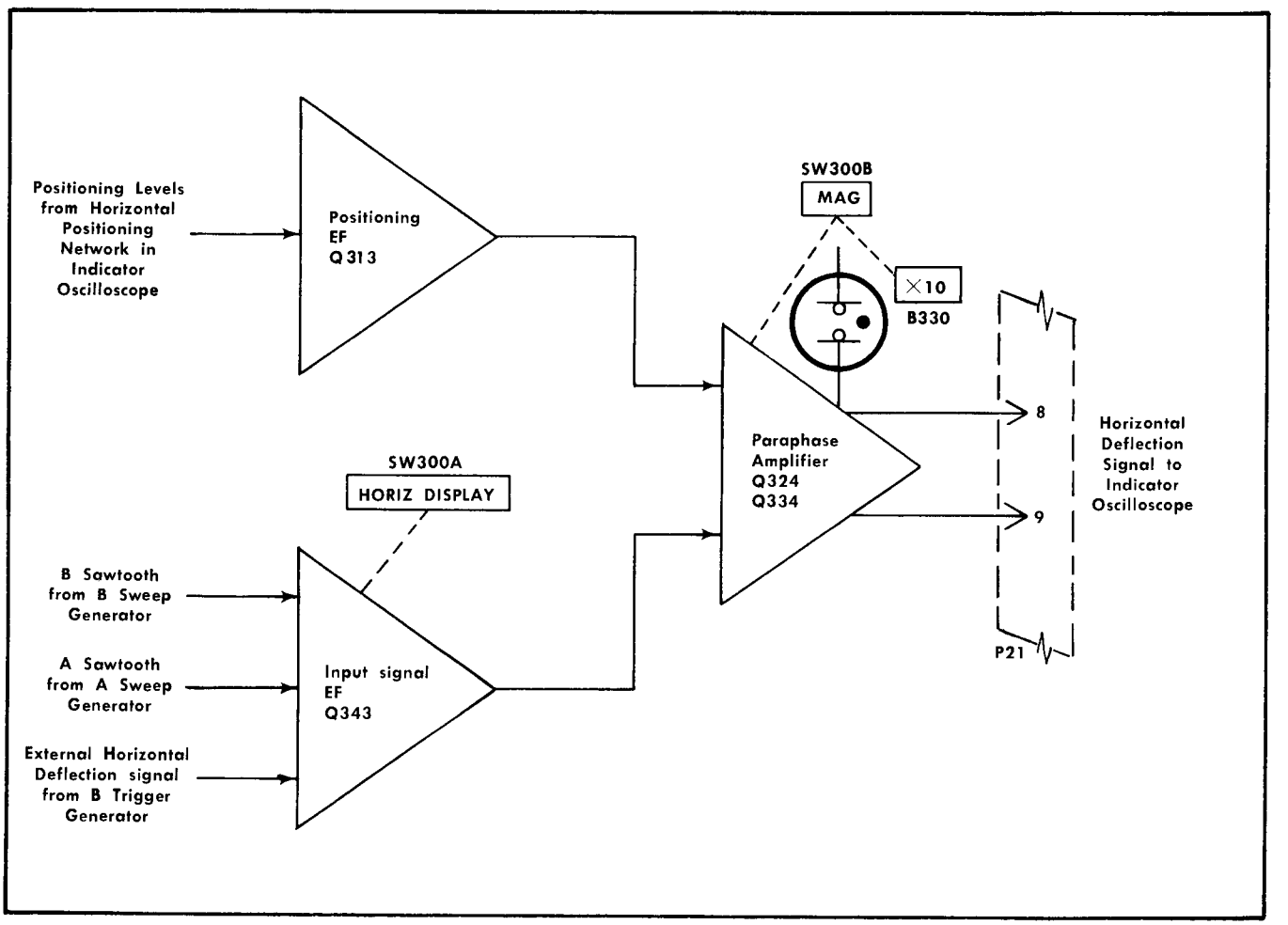

Fig. 3-8. Horizontal Preamp detailed block diagram.

positive-going sawtooth at the collector of Q324. The positioning level from the Positioning EF sets the bias level on Q324 and, in a manner similar to that just described for the sawtooth signal, it sets the bias level on Q344 to determine the horizontal position of the CRT display. To provide linear operation for the Paraphase Amplifier stage, R345 provides negative feedback from the collector to the base of Q344, and R323 provides negative feedback from the collector to the base of Q324.

When the MAG switch is set to ×10, B330 is connected between the +100 and —15-volt supplies through R330. B330 ignites to indicate that the sweep is magnified. Variable resistor R339, Mag Regis, is adjusted to balance the current through Q324 and Q344. This balances the output DC level from this circuit so a center-screen display does not shift horizontal position when the MAG switch is changed from OFF to ×10. The push-pull output sawtooth at the collectors of Q324 and Q344 is connected to the horizontal deflection system of the indicator oscilloscope through terminals 7 and 9 of the interconnecting plug.

INTERCONNECTING PLUG

Diagram 7 shows the interconnections between the Type 11B2A and the indicator oscilloscope. This diagram also shows a portion of the HORIZ DISPLAY switch, SW300A, which determines the unblanking pulse connected to the CRT circuit of the indicator oscilloscope. In the A position of the HORIZ DISPLAY switch, the unblanking level for the CRT is determined by the A unblanking gate level from the A Sweep Generator circuit. When the HORIZ DISPLAY switch is set to either A INTEN BY B position, the trace intensity during the delay time (selected by A TIME/CM switch and DELAY TIME MULT dial) is determined by the A unblanking gate level (along with the indicator oscilloscope intensity control). Then, during the delayed sweep time, an intensified zone is shown on the trace to indicate that portion of the sweep which will be displayed at the delayed sweep rate selected by the DELAYED sweep switch (B TIME/CM). In both B DLY'D BY A positions, the display intensity is about the same as obtained in the A only position and is determined by a combination of both the A unblanking gate and the unblanking gate. In the EXT INPUT position of the HORIZ DISPLAY switch, —15 volts is connected to the indicator oscilloscope through R423. This partially unblanks the CRT; however, the indicator oscilloscope intensity control must normally be advanced also to produce a visible display. The unblanking gate level selected by the HORIZ DISPLAY switch is connected to the indicator oscilloscope through terminal 2 of the interconnecting plug.

NOTES

SECTION 4
MAINTENANCE

Introduction

This section of the manual contains maintenance information for use in preventive maintenance, corrective maintenance or troubleshooting of the Type 11B2A.

PREVENTIVE MAINTENANCE

General

Preventive maintenance consists of cleaning, visual inspection, lubrication, etc. Preventive maintenance performed on a regular basis may prevent instrument breakdown and will improve the reliability of this instrument. The severity of the environment to which the Type 11B2A is subjected determines the frequency of maintenance. A convenient time to perform preventive maintenance is preceding recalibration of the instrument.

Cleaning

The Type 11B2A should be cleaned as often as operating conditions require. Accumulation of dirt in the instrument can cause overheating and component breakdown. Dirt on components acts as an insulating blanket and prevents efficient heat dissipation. It also provides an electrical conduction path.

The covers of the indicator oscilloscope minimize the amount of dust which reaches the interior of the Type 11B2A. Operation of the system without the indicator oscilloscope covers in place necessitates more frequent cleaning. When the Type 11B2A is not in use, it should be stored in a protected location such as a dust-tight cabinet.

CAUTION

Avoid the use of chemical cleaning agents which might damage the plastics used in this instrument. Avoid chemicals which contain benzene, toluene, xylene, acetone or similar solvents.

Exterior. Loose dust accumulated on the outside of the Type 11B2A can be removed with a soft cloth or small paint brush. The paint brush is particularly useful for dislodging dirt on and around the front-panel controls. Dirt which remains can be removed with a soft cloth dampened in a mild detergent and water solution. Abrasive cleaners should not be used.

Interior. Dust in the interior of the instrument should be removed occasionally due to its electrical conductivity under high-humidity conditions. The best way to clean the interior is to blow off the accumulated dust with dry, low-velocity air. Remove any dirt which remains with a soft paint brush or a cloth dampened with a mild detergent and water solution. A cotton-tipped applicator is useful for cleaning in narrow spaces or for cleaning ceramic terminal strips.

Use the following procedure to gain access to components located between the TIME/CM switch and the B Time Base chassis on the right side of the Type 11B2A:

1. Unscrew the captive screw located on each end of the chassis near the bottom.

2. Disconnect the cable to the A SOURCE switch at the pin connectors on the B Time Base Chassis.

3. Swing the bottom of the chassis out.

4. Before inserting the unit into the indicator oscilloscope be sure to again secure the chassis to the instrument by reversing the above procedure.

Lubrication

General. The reliability of potentiometers, rotary switches and other moving parts can be maintained if they are kept properly lubricated. Use a cleaning-type lubricant (e.g., Tektronix Part No. 006-0218-00) on switch contacts and the interconnecting plug. Lubricate switch detents with a heavier grease (e.g., Tektronix Part No. 006-0219-00). Potentiometers which are not permanently sealed should be lubricated with a lubricant which does not affect electrical characteristics (e.g., Tektronix Part No. 006-0220-00). The potentiometer lubricant can also be used on shaft bushings. Do not over lubricate. A lubrication kit containing the necessary lubricants and instructions is available from Tektronix, Inc. Order Tektronix Part No. 003-0342-00.

Visual Inspection

The Type 11B2A should be inspected occasionally for such defects as broken connections, broken or damaged ceramic strips, improperly seated transistors or nuvistors, and heat-damaged parts.

The corrective procedure for most visible defects is obvious; however, particular care must be taken if heat-damaged components are found. Overheating usually indicates other trouble in the instrument; therefore, it is important that the cause of overheating be corrected to prevent a recurrence of the damage.

Transistor and Nuvistor Checks

Periodic checks of the transistors and nuvistors in the Type 11B2A are not recommended. The best check of transistor or nuvistor performance is its actual operation in the instrument. More details on checking transistor and nuvistor operation are given under Troubleshooting.

Recalibration

To assure accurate measurements, check the calibration of this instrument after each 1000 hours of operation or every six months if used infrequently. In addition, replacement of components may necessitate recalibration of the affected

circuits. Complete calibration instructions are given in the Calibration section.

The calibration procedure can also be helpful in localizing certain troubles in the instrument. In some cases, minor troubles may be revealed and/or corrected by recalibration.

TROUBLESHOOTING

Introduction

The following information is provided to facilitate troubleshooting of the Type 11B2A, if trouble develops. Information contained in other sections of this manual should be used along with the following information to aid in locating the defective component. An understanding of the circuit operation is very helpful in locating troubles. See the Circuit Description section for complete information.

Troubleshooting Aids

Diagrams. Circuit diagrams are given on foldout pages in Section 9. The component number and electrical value of each component in this instrument are shown on the diagrams. Important voltages and waveforms are also shown on the diagrams.

Switch Wafer Identification. Switch wafers shown on the diagrams are coded to indicate the position of the wafer in the complete switch assembly. The numbered portion of the code refers to the wafer number counting from the front, or mounting end of the switch, toward the rear. The letters F and R indicate whether the front or rear of the wafer performs the particular switching function. For example, a wafer designated 2R indicates that the rear of the second wafer is used for this particular switching function.

Wiring Color-Code. All insulated wire and cable used in the Type 11B2A is color-coded to facilitate circuit tracing. Signal carrying leads are identified with one or two colored stripes. Voltage supply leads are identified with three stripes to indicate the approximate voltage using the EIA resistor color code. A white background color indicates a positive voltage and a tan background indicates a negative voltage. The widest stripe identifies the first color of the code. Table 4-1 gives the wiring color-code for the power-supply voltages used in the Type 11B2A.

TABLE 4-1

Power Supply Wiring Color Code

Supply	Back ground Color	First Stripe	Second Stripe	Third Stripe
—75 volt	Tan	Violet	Green	Black
—15 volt	Tan	Brown	Green	Black
+15 volt	White	Brown	Green	Black
+100 volt	White	Brown	Black	Brown
+300 volt	White	Orange	Black	Brown

Resistor Color-Code. In addition to the brown composition resistors, some metal-film resistors and some wire-wound resistors are used in the Type 11B2A. The resistance values of wire-wound resistors are printed on the body of the component. The resistance values of composition resistors and metal-film resistors are color-coded on the components (some metal-film resistors may have the value printed on the body) with EIA color-code. The color-code is read starting with the stripe nearest the end of the resistor. Composition resistors have four stripes which consist of two significant figures, a multiplier and a tolerance value (see Fig. 4-1). Metal-film resistors have five stripes consisting of three significant figures, a multiplier and a tolerance value.

Capacitor Marking. The capacitance values of common disc capacitors and small electrolytics are marked in microfarads on the side of the component body. The white ceramic capacitors used in the Type 11B2A are color coded in picofarads using a modified EIA code (see Fig. 4-1).

Diode Color Code. The cathode end of each glass-encased diode is indicated by a stripe, a series of stripes or a dot. For most silicon or germanium diodes with a series of stripes, the color-code also indicates the type of diode and identifies the Tektronix Part Number using the resistor color-code system (e.g., a diode color-coded blue-brown-gray-green indicates diode type 6185 with Tektronix Part Number 152-0185-00). The cathode and anode end of metal-encased diodes can be identified by the diode symbol marked on the body.

Troubleshooting Equipment

The following equipment is useful for troubleshooting the Type 11B2A.

1. Transistor Tester

Description: Tektronix Type 575 Transistor-Curve Tracer or equivalent.

Purpose: To test the semiconductors used in this instrument.

2. Volt-ohmmeter

Description: 20,000 ohms/volt. 0-500 volts DC.

Accurate within 3%.

Test prods must be well insulated.

Purpose: To check voltage and for general troubleshooting in this instrument.

3. Test Oscilloscope

Description: DC to 50 MHz frequency response, 50 millivolts to 50 volts/division deflection factor. Use a 10× probe.

Purpose: To check waveforms in the instrument.

4. Plug-In Extension.

Description: 32-pin rigid extender. Tektronix Part No. 013-0034-00.

Purpose: Permits operation of the unit outside the plug-in compartment for better accessibility during troubleshooting.

Troubleshooting Techniques

This troubleshooting procedure is arranged in an order which checks the simple trouble possibilities before proceed-

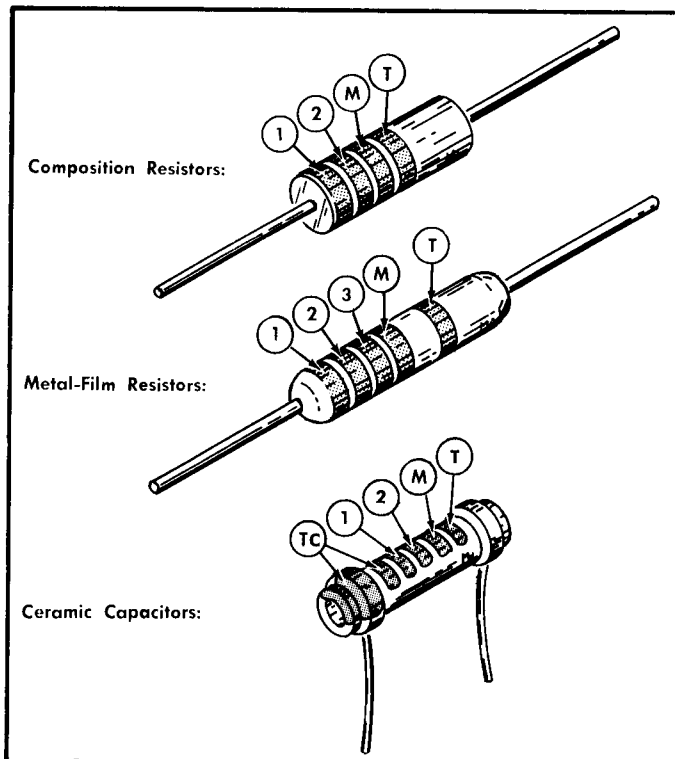

Resistor and Capacitor Color Code

Color	Significant Figures	Multiplier Resistors	Multiplier Capacitors	Tolerance Resistors	Tolerance Capacitors
Silver	---	10^{-2}	---	±10%	---
Gold	---	10^{-1}	---	±5%	---
Black	0	1	1	---	±20% or 2 pF*
Brown	1	10	10	±1%	±1% or 0.1 pF*
Red	2	10^{2}	10^{2}	±2%	±2%
Orange	3	10^{3}	10^{3}	±3%	±3%
Yellow	4	10^{4}	10^{4}	±4%	+100% −0%
Green	5	10^{5}	10^{5}	±0.5%	±5% or 0.5 pF*
Blue	6	10^{6}	10^{6}	---	---
Violet	7	---	---	---	---
Gray	8	---	10^{-2}	---	+80% −20% or 0.25 pF*
White	9	---	10^{-1}	---	±10% or 1 pF*
(none)	---	---	---	±20%	±10% or 1 pF*

*For capacitance of 10 pF or less.

(1) (2) and (3) —1st, 2nd and 3rd significant figures;
(M) —multiplier; (T) —tolerance;
(TC) —temperature coefficient.

NOTE: (T) and/or (TC) color code for capacitors depends upon manufacturer and capacitor type. May not be present in some cases.

Fig. 4-1. Color-code for resistors and ceramic capacitors.

ing with extensive troubleshooting. The first few checks assure proper connection, operation and calibration. If the trouble is not located by these checks, the remaining steps aid in locating the defective component. When the defective component is located, it should be replaced following the replacement procedures given under Corrective Maintenance.

1. Check Control Setting. Incorrect control settings can indicate a trouble that does not exist. If there is any question about the correct function or operation of any control, see the Operating Instructions section of this manual.

2. Check Associated Equipment. Before proceeding with troubleshooting of the Type 11B2A, check that the equipment used with this instrument is operating correctly. Check that the signal is properly connected and that the interconnecting cables are not defective. The indicator oscilloscope and vertical plug-in unit can be checked for proper operation by substituting another time-base unit which is known to be operating properly (preferably another Type 11B2A or similar unit). If the trouble persists after substitution, the indicator oscilloscope and/or vertical plug-in unit is defective.

3. Check Instrument Calibration. Check the calibration of this instrument, or the affected circuit if the trouble exists in one circuit. The apparent trouble may only be a result of misadjustment or may be corrected by calibration. Complete calibration instructions are given in the Calibration Section of this manual.

4. Visual Check. Visually check the portion of the instrument in which the trouble is located. Many troubles can be located by visual indications such as unsoldered connections, broken wires, damaged components, etc.

5. Isolate Trouble to a Circuit. To isolate a trouble to a circuit, note the trouble symptom. The sympton often identifies the circuit in which the trouble is located. For example, time base A sweep will not run in any setting of TRIG MODE

switch indicates that the A Sweep Generator circuit is probably at fault. When trouble symptoms appear in more than one circuit, check all affected circuits by taking voltage and waveform readings. Also check for the correct output signals at the front-panel output connectors with a test oscilloscope. If the signal is correct, the circuit is working correctly up to that point. For example, correct sawtooth output indicates that the Sweep Trigger and Sweep Generator circuits are operating correctly.

Fig. 4-2 provides a guide to aid in locating a defective circuit. This chart may not include checks for all possible defects; use steps 6 and 7 in such cases. Start from the top of the chart and perform the given checks on the left side of the page until a step is found which is not correct. Further checks and/or the circuit in which the trouble is probably located are listed to the right of this step.

After the defective circuit has been located, proceed with steps 6 and 7 to locate the defective component(s).

6. Check Voltages and Waveforms. Often the defective component can be located by checking for the correct voltage or waveform in the circuit. Typical voltages and waveforms are given on the diagrams.

NOTE

Voltages and waveforms given on the diagrams are not absolute and may vary slightly between instruments. To obtain operating conditions similar to those used to take these readings, see the first diagram page.

7. Check Individual Components. The following procedures describe methods of checking individual components in the Type 11B2A. Components which are soldered in place are best checked by disconnecting one end. This isolates the measurement from the effects of surrounding circuitry.

A. TRANSISTORS AND NUVISTORS. The best check of transistor or nuvistor operation is actual performance under operating conditions. If a transistor or nuvistor is suspected of being defective, it can best be checked by substituting a new component or one which has been checked previously. However, be sure that circuit conditions are not such that a replacement transistor or nuvistor might also be damaged. If substitute transistors or nuvistors are not available, use a dynamic tester (such as Tektronix Type 570 or 575).

B. DIODES. A diode can be checked for an open or shorted condition by measuring the resistance between terminals. With an ohmmeter scale having an internal source of between 800 millivolts and 3 volts, the resistance should be very high in one direction and very low when the leads are reversed.

CAUTION

Do not use an ohmmeter scale that has a high internal current. High currents may damage the diode. Do not measure tunnel diodes with an ohmmeter; use a dynamic tester (such as a Tektronix Type 575 Transistor-Curve Tracer).

C. RESISTORS. Resistors can be checked with an ohmmeter. Check the Electrical Parts List for the tolerance of the resistors used in this instrument. Resistors normally do not need to be replaced unless the measured value varies widely from the specified value.

D. INDUCTORS. Check for open inductors by checking continuity with an ohmmeter. Shorted or partially shorted inductors can usually be found by checking the waveform response when high-frequency signals are passed through the circuit. Partial shorting often reduces high-frequency response (roll-off).

E. CAPACITORS. A leaky or shorted capacitor can best be detected by checking resistance with an ohmmeter on the highest scale. Do not exceed the voltage rating of the capacitor. The resistance reading should be high after initial charge of the capacitor. An open capacitor can best be detected with a capacitance meter or by checking whether the capacitor passes AC signals.

8. Repair and Readjust the Circuit. If any defective parts are located, follow the replacement procedures given in this section. Be sure to check the performance of any circuit that has been repaired or that has had any electrical components replaced.

CORRECTIVE MAINTENANCE

General

Corrective maintenance consists of component replacement and instrument repair. Special techniques required to replace components in this instrument are given here.

Obtaining Replacement Parts

Standard Parts. All electrical and mechanical part replacements for the Type 11B2A can be obtained through your local Tektronix Field Office or representative. However, many of the standard electronic components can be obtained locally in less time than is required to order them from Tektronix, Inc. Before purchasing or ordering replacement parts, check the parts lists for value, tolerance, rating and description.

NOTE

When selecting replacement parts, it is important to remember that the physical size and shape of a component may affect its performance in the instrument, particularly at high frequencies. All replacement parts should be direct replacements unless it is known that a different component will not adversely affect instrument performance.

Special Parts. In addition to the standard electronic components, some special parts are used in the Type 11B2A. These parts are manufactured or selected by Tektronix, Inc. to meet specific performance requirements, or are manufactured for Tektronix, Inc. in accordance with our specifications. These special parts are indicated in the parts list by an asterisk preceding the part number. Most of the mechanical parts used in this instrument have been manufactured by Tektronix, Inc. Order all special parts directly from your local Tektronix Field Office or representative.

Ordering Parts. When ordering replacement parts from Tektronix, Inc., include the following information:

1. Instrument Type.

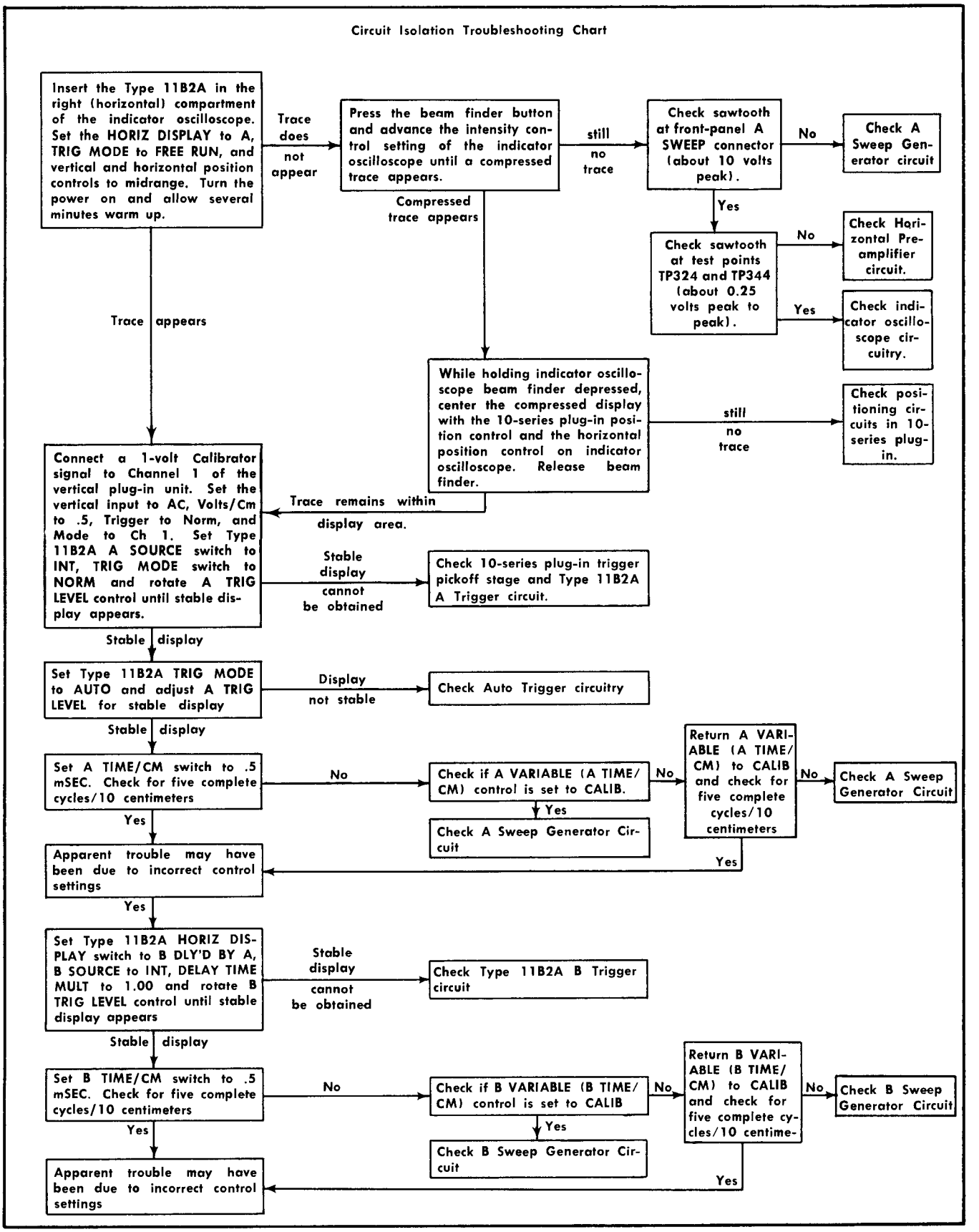

Fig. 4-2. Troubleshooting chart.

2. Instrument Serial Number.

3. A description of the part (if electrical, include circuit number).

4. Tektronix Part Number.

Soldering Techniques

WARNING

Disconnect the instrument from the power source before soldering.

Ceramic Terminal Strips. Solder used on the ceramic terminal strips should contain about 3% silver. Use a 40- to 75-watt soldering iron with a 1/8 inch wide wedge-shaped tip. Ordinary solder can be used occasionally without damage to the ceramic terminal strips. However, if ordinary solder is used repeatedly or if excessive heat is applied, the solder-to-ceramic bond may be broken.

Solder containing 3% silver should be available locally, or it can be purchased from Tektronix, Inc. in one pound rolls; order by Tektronix Part No. 251-0514-00.

Observe the following precautions when soldering to ceramic terminal strips.

1. Use a hot iron for a short time. Apply only enough heat to make the solder flow freely.

2. Maintain a clean, properly tinned tip.

3. Avoid putting pressure on the ceramic terminal strip.

4. Do not attempt to fill the terminal-strip notch with solder; use only enough solder to cover the wires adequately.

5. Clean the flux from the terminal strip with a flux-remover solvent.

Metal Terminals. When soldering metal terminals (e.g., switch terminals, potentiometers, etc.), ordinary 60/40 solder can be used. Use a soldering iron with a 40- to 75-watt rating and a 1/8-inch wide wedge-shaped tip.

Observe the following precautions when soldering metal terminals:

1. Apply only enough heat to make the solder flow freely.

2. Apply only enough solder to form a solid connection. Excess solder may impair the function of the part.

3. If a wire extends beyond the solder joint, clip off the excess.

4. Clean the flux from the solder joint with a flux-remover solvent.

Component Replacement

WARNING

Disconnect the instrument from the power source before replacing components.

Ceramic Terminal Strip Replacement. A complete ceramic terminal strip assembly is shown in Fig. 4-3. Replacement strips (including studs) and spacers are supplied under separate part numbers. However, the old spacers may be re-used if they are not damaged. The applicable Tektronix Part numbers for the ceramic strips and spacers used in this instrument are given in the Mechanical Parts List.

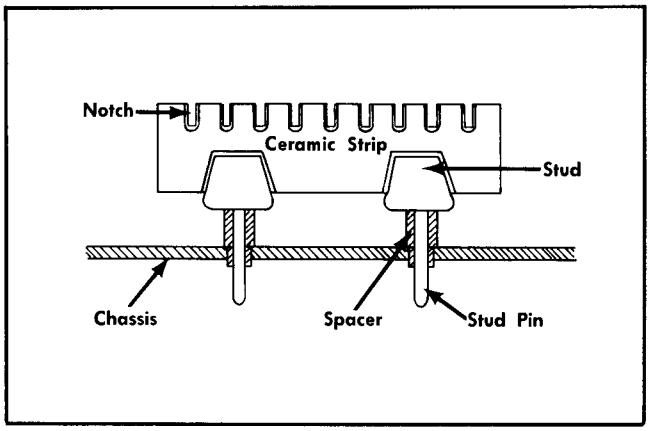

Fig. 4-3. Ceramic terminal strip assembly.

To replace a ceramic terminal strip, use the following procedure:

REMOVAL:

1. Unsolder all components and connections on the strip. To aid in replacing the strip, it may be advisable to mark each lead or draw a sketch to show location of the components and connections.

2. Pry or pull the damaged strip from the chassis. Be careful not to damage the chassis.

3. If the spacers come out with the strip, remove them from the stud pins for use on the new strip (spacers should be replaced if they are damaged).

REPLACEMENT:

1. Place the spacers in the chassis holes.

2. Carefully press the studs of the strip into the spacers until they are completely seated. If necessary, use a soft mallet and tap lightly, directly over the stud, to seat the strip completely.

3. If the stud extends through the spacers, cut off the excess.

4. Replace all components and connections. Observe the soldering precautions given under Soldering Techniques in this section.

Transistor and Nuvistor Replacement. Transistors and nuvistors should not be replaced unless actually defective. If removed from their sockets during routine maintenance, return them to their original sockets. Unnecessary replacement of transistors or nuvistors may affect the calibration of this instrument. When transistors or nuvistors are replaced, check the operation of that part of the instrument which may be affected.

Replacement transistors or nuvistors should be of the original type or a direct replacement. Remount the transistors in the same manner as the original.

Fig. 4-4 shows the lead configurations of the transistors and nuvistors used in this instrument. This view is as seen from the bottom of the transistor or nuvistor. Notice that

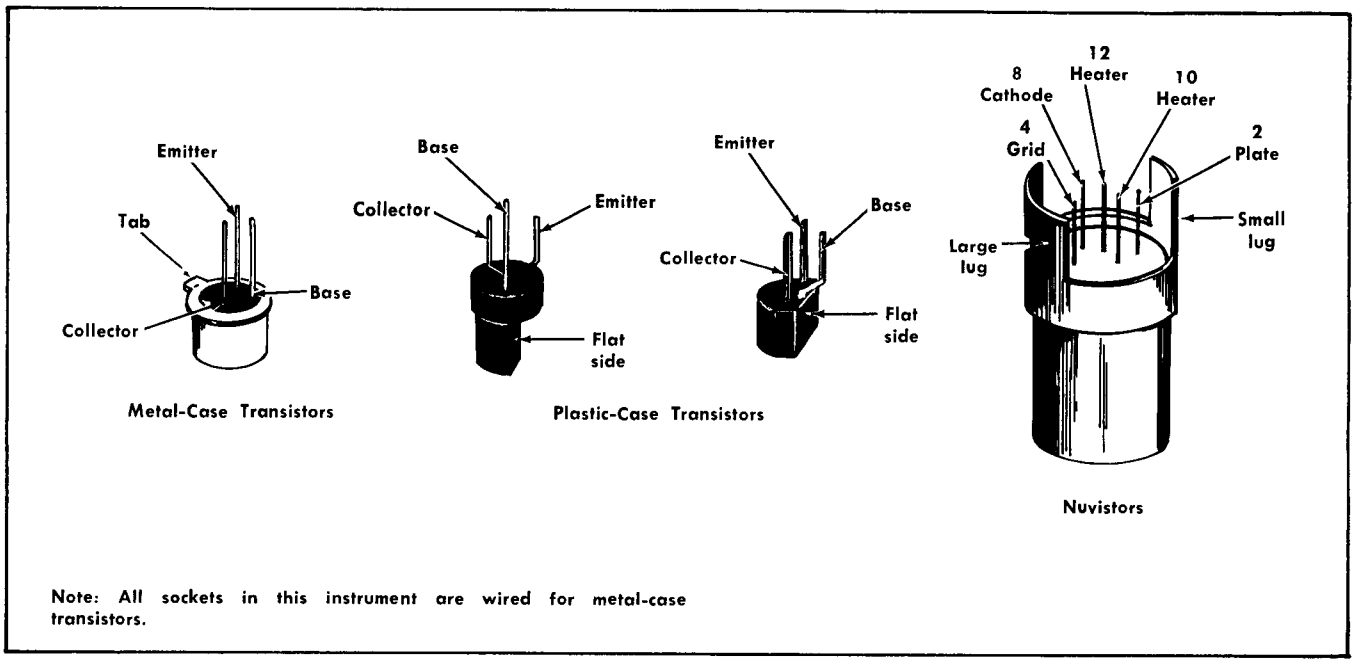

Fig. 4-4. Electrode configuration for transistors and nuvistors in this instrument (as viewed from bottom).

there are two different lead configurations for plastic-case transistors. When replacing these transistors, check the manufacturer's basing diagram for correct basing. All transistor sockets in this instrument are wired for the basing used for metal-case transistors.

Rotary Switches. Individual wafers or mechanical parts of rotary switches are normally not replaceable. If a switch is defective, replace the entire assembly. Replacement switches can be ordered either wired or unwired; refer to the Parts List for the applicable part numbers.

When replacing a switch, tag the leads and switch terminals with corresponding identification tags as the leads are disconnected. Then, use the old switch as a guide for installing the new one. An alternative method is to draw a sketch of the switch layout and record the wire color at each terminal. When soldering to the new switch, be careful that the solder does not flow beyond the rivets on the switch terminals. Spring tension of the switch contact can be destroyed by excessive solder.

Recalibration After Repair

After any electrical component has been replaced, the calibration of that particular circuit should be checked, as well as the calibration of other closely related circuits. The Performance Check procedure in Section 5 provides a quick and convenient means of checking instrument operation.

NOTES

SECTION 5
PERFORMANCE CHECK

Introduction

This section of the manual provides a procedure for rapidly checking the performance of the Type 11B2A. This procedure checks the operation of the instrument without removing the covers or making internal adjustments.

If the instrument does not meet the performance requirements given in this procedure, internal checks and/or adjustments are required. See the Calibration section. All performance requirements given in this section correspond to those given in the Characteristics section.

NOTE

All waveforms shown in this section are actual waveform photographs taken with a Tektronix Oscilloscope Camera System.

Recommended Equipment

The following equipment is recommended for a complete performance check. Specifications given are the minimum necessary to perform this procedure. All equipment is assumed to be calibrated and operating within the given specifications. If equipment is substituted, it must meet or exceed the specifications of the recommended equipment.

1. Calibration oscilloscope. Tektronix Type 647A or R647A recommended.

2. Amplifier plug-in. Calibrated Tektronix 10-series Amplifier plug-in unit. The associated amplifier unit must have a bandwidth of at least DC to 100 MHz to enable the Type 11B2A internal triggering to be accurately checked.

3. Test oscilloscope. Bandwidth, DC to at least 10 MHz; minimum deflection factor, 5 volts/division. Tektronix Type 647A Oscilloscope with 10-and 11-series Plug-In Units, and Tektronix P6047 Probe recommended.

4. Medium frequency constant amplitude sine wave generator. Frequency, 50 kHz and 350 kHz to 100 MHz; output amplitude, less than 10 mV to above 4 volts; amplitude regulation accuracy, ±5%. Tektronix Type 191 Constant Amplitude Signal Generator recommended.

5. Low frequency sine wave generator. Frequency 60 Hz to 50 kHz; output amplitude, less than 100 MV to above 500 mV; amplitude regulation accuracy, ±3%. For example General Radio 1310-A Oscillator.

6. Time mark generator. Marker outputs 0.1 μs to 5 s; sine wave outputs 10 ns, 20 ns and 50 ns; accuracy 0.001%. Tektronix Type 184 Time-Mark Generator recommended.

7. Cable (two). Impedance, 50 ohm; length, 5 nanoseconds; connectors, GR. Tektronix Part No. 017-0502-00.

8. Cable (two). Impedance, 50 ohm; length 42 inch; connectors, BNC. Tektronix Part No. 012-0057-00.

9. Adapter. Connectors, BNC female to alligator clips. Tektronix Part No. 013-0076-00.

10. Adapter (BNC T). Connectors, female BNC two ends, male BNC third end. Tektronix Part No. 103-0030-00.

11. Adapter (GR power divider Type 874 TPD). Connectors, GR all three ends. Tektronix Part No. 017-0082-00.

12. Adapter. Connectors, BNC female to BSM female. Tektronix Part No. 103-0036-00.

13. Termination (two). Impedance, 50 ohm, accuracy; ±3%; connectors, GR one end, BNC other end. Tektronix Part No. 017-0083-00.

14. Termination (two). Impedance, 50 ohm; accuracy, ±3%; connectors, BNC. Tektronix Part No. 011-0049-00.

15. Connector (Cinch #KPT-06F12-10P). Description; male 10 pin connector which mates with Type 647A J101. Tektronix Part No. 131-0300-00.

PERFORMANCE CHECK PROCEDURE

General

In the following procedure, control settings or test equipment connections should not be changed except as noted. If only a partial check is desired, refer to the preceding step(s) for setup information. Type 11B2A front-panel control titles referred to in this procedure are capitalized (e.g., TRIG MODE).

The following procedure uses the equipment listed under Recommended Equipment. If equipment is substituted, control settings or setup may need to be altered to meet the requirements of the equipment used.

Preliminary Procedure

1. Install the Type 11B2A into the horizontal plug-in compartment of the Type 647A.

2. Install the 10-series plug-in into the vertical plug-in compartment of the Type 647A.

3. Set the front-panel controls of the Type 11B2A, 10-series plug-in and 647A as described below.

Type 11B2A

TRIG MODE	NORM
A SLOPE	+
A TRIG LEVEL	Midrange

HF STABILITY	Midrange
A COUPLING	AC
A SOURCE	LINE
B COUPLING	AC
B SOURCE	INT
B TRIG LEVEL	Midrange
B SLOPE	+
HORIZ DISPLAY	A
MAG	OFF
A TIME/CM	1 mSEC
B TIME/CM	1 mSEC
A VARIABLE (A TIME/CM)	CALIB
B VARIABLE (B TIME/CM)	CALIB
DELAY TIME MULT	1.00

10-Series

Volts/Cm	.5
Variable (Volts/Cm)	Cal
Position	Midrange
Input Coupling	AC
Invert	Pushed in
Trigger	Norm
Mode	Ch 1

Type 647A

Intensity	Useable display brightness
Focus	Well defined display
Astigmatism	Well defined display
Scale Illum	As desired
Calibrator	1 V
Position	Midrange
Fine (Position)	Midrange

4. Connect the Type 647A directly to a power supply of appropriate voltage.

5. Set the Type 647A POWER switch to ON. Allow at least 20 minutes warm up at 25°C, ±5°C, for checking the instrument to the given accuracy.

1. Check Normal Triggering Mode

REQUIREMENT—Stable display must be obtained by adjusting A TRIG LEVEL control.

a. With the Type 11B2A TRIG MODE switch at NORM, A COUPLING switch at AC, note that no display is present.

b. Set the Type 11B2A A SOURCE switch to LINE.

c. Connect a 10× probe from the 10-series input connector being used to a source of power-line frequency sine wave signal.

d. Set the Type 11B2A A TIME/CM switch to 5 mSEC.

e. Set the 10-series volts/cm switch for a display about 3 cm high.

f. CHECK—Display stability; stable display must be obtained by adjusting the A TRIG LEVEL control.

g. Disconnect the 10× probe.

2. Check Automatic Triggering Mode

REQUIREMENT—Provides stable triggering for signals above 20 Hz by adjusting A TRIG LEVEL control and provides a free running display for signals below 20 Hz, or in the absence of a signal.

a. Set the Type 11B2A TRIG MODE switch to AUTO, A SOURCE switch to INT and A TIME/CM switch to 1 mSEC. Note that a trace is displayed.

b. To the output connector of a low frequency sine wave generator connect the alligator clip leads of a clip lead adapter (black clip lead to ground, red clip lead to signal ouput connector).

c. Connect a 50 ohm coaxial cable to the BNC connector of the clip lead adapter, then connect a 50 ohm BNC termination to the unconnected end of the 50 ohm coaxial cable.

d. Connect the 50 ohm coaxial cable/50 ohm BNC termination combination from the low frequency generator to the 10-series input connector being used.

e. Adjust the frequency and amplitude controls on the low frequency generator to produce a 1 kHz sine wave display about 3 cm high on the Type 647A CRT.

f. CHECK—DISPLAY stability; a consistent triggering point on the sine wave and stable display must be obtained by adjusting the A TRIG LEVEL control.

g. Adjust the frequency and amplitude controls on the low frequency generator to produce a 10 Hz sine wave display about 3 cm high on the Type 647A CRT.

h. Set the Type 11B2A A TIME/CM switch to 20 mSEC.

i. CHECK—DISPLAY stability; it must be impossible to obtain a consistent triggering point on the sine wave by adjusting the A TRIG LEVEL control.

3. Check Free Run Triggering Mode

REQUIREMENT—Free-running display at all times.

a. Set the Type 11B2A TRIG MODE switch to FREE RUN.

b. CHECK—DISPLAY stability; it must be impossible to obtain a stable display by adjusting the A TRIG LEVEL control.

c. Disconnect all test equipment.

4. Check A Trigger Level Mechanical Zero and Range

REQUIREMENT—A TRIG LEVEL control knob dot opposite 0 when control is at electrical zero. A TRIG LEVEL control has range greater than ±5 volts when A SOURCE switch is set to EXT and range greater than ±50 volts when A SOURCE switch is set to EXT ÷ 10.

a. Set the Type 11B2A TRIG MODE switch to NORM, A COUPLING switch to DC, the A SOURCE switch to EXT and the A TIME/CM switch to 1 mSEC.

b. Rotate the TRIG LEVEL control slowly from one extreme to the other extreme, noting the position of the control at which the sweep runs once across the CRT.

c. CHECK—TRIG LEVEL control position; the dot on the TRIG LEVEL control should be opposite the 0, as the sweep runs. If it is not, loosen the control with a 1/16 hexagonal wrench and reposition the control so the dot is opposite the 0.

d. Set the Type 11B2A TRIG MODE switch to AUTO and the A COUPLING switch to AC.

e. Connect a BNC T adapter to the Type 647A cal out connector. Then connect a 50 ohm coaxial cable between the BNC T adapter and the 10-series input connector selected by the mode switch. Connect another 50 ohm coaxial cable between the remaining BNC T adapter connection and the A TRIG IN connector on the Type 11B2A.

f. Set the Type 647A calibrator switch for an output square-wave amplitude of 10 volts.

g. Adjust the 10-series volts/cm switch to obtain a display 2 cm high on the CRT.

h. Rotate the A TRIG LEVEL control slowly from one extreme to the other extreme.

i. CHECK—Display stability; display must free run when the A TRIG LEVEL control is at either extreme.

j. Set the Type 11B2A A SOURCE switch to EXT ÷ 10.

k. Set the Type 647A calibrator switch for an output square-wave amplitude of 100 volts.

l. Adjust the 10-series volts/cm switch to obtain a display 5 cm high on the CRT.

m. Rotate the A TRIG LEVEL control slowly from one extreme to the other extreme.

n. CHECK—Display stability; display must free run when the A TRIG LEVEL control is at either extreme.

o. Disconnect all test equipment and turn off the Type 647A calibrator.

5. Check A Slope Switch Operation

REQUIREMENT—A SLOPE switch at +, beginning of display rising. A SLOPE switch at —, beginning of display falling.

a. Set the Type 11B2A A SOURCE switch to LINE.

b. Connect a 10× probe from the 10-series input connector being used to a sine wave signal source of power line frequency.

c. Set the 10-series volts/cm switch for a CRT display about 2 cm high.

d. CHECK—Display polarity against the Type 11B2A A SLOPE switch polarity; the beginning of the sine wave display should be rising.

e. Set the Type 11B2A A SLOPE switch to —.

f. CHECK—Display polarity against the Type 11B2A A SLOPE switch polarity; the beginning of the sine wave display should be falling.

g. Set the Type 11B2A TRIG MODE switch to NORM and the A SLOPE switch to +.

h. Repeat parts d through f of this step.

i. Disconnect the 10× probe.

6. Check A Sweep 50 kHz to 100 MHz External Triggering

REQUIREMENT—Stable display with 125 millivolts or less of 50 kHz and 20 MHz sine wave signal and with 250 millivolts or less of 100 MHz sine wave signal.

a. Set the Type 11B2A A SLOPE switch to +, A SOURCE switch to EXT and the A TIME/CM switch to 20 μSEC.

b. Connect a 50 ohm GR power divider adapter to the output connector of the medium frequency constant amplitude sinewave generator.

c. Connect a 5 ns coaxial cable to each end of the 50 ohm GR power divider adapter, then connect a 50 ohm GR to BNC termination to the unconnected end of each 5 ns coaxial cable.

d. Connect one 5 ns coaxial cable/50 ohm GR to BNC termination combination from the 50 ohm GR power divider to the Type 11B2A A TRIG IN connector.

e. Connect the second 5 ns coaxial cable/50 ohm GR to BNC termination combination from the 50 ohm GR power divider to the 10-series input connector being used.

f. Set the 10-series volts/cm switch to .05 on the channel being used.

g. Adjust the frequency and amplitude controls on the medium frequency generator to produce a 50 kHz sine wave display 2.5 cm high on the Type 647A CRT.

h. CHECK—Display stability; a stable display must be obtained by adjusting the Type 11B2A A TRIG LEVEL control.

i. Change the Type 11B2A A SLOPE switch to — and repeat part h.

j. Set the Type 11B2A A SLOPE switch to + and the A COUPLING switch to AC LF REJ.

k. Repeat parts g through i of this step.

l. Set the Type 11B2A A SLOPE switch to + and the A COUPLING switch to DC.

m. Repeat parts g through i of this step.

n. Adjust the frequency and amplitude controls on the medium frequency generator to produce a 20 MHz sine wave display 2.5 cm high on the Type 647A CRT.

o. Set the Type 11B2A A SLOPE switch to +, A COUPLING switch to AC, the MAG switch to ×10, and the A TIME/CM switch to .5 μSEC.

p. CHECK—Display stability; a stable display must be obtained by adjusting the Type 11B2A A TRIG LEVEL control.

q. Change the Type 11B2A A SLOPE switch to — and repeat part p.

r. Set the Type 11B2A A SLOPE switch to + and the A COUPLING switch to AC LF REJ.

s. Repeat parts n through q of this step.

t. Set the Type 11B2A A SLOPE switch to + and the A COUPLING switch to DC.

u. Repeat parts n through q of this step.

v. Adjust the frequency and amplitude controls on the medium frequency generator to produce a 100 MHz sine wave display 5 cm high on the Type 647A CRT.

w. Set the Type 11B2A A SLOPE switch to +, A COUPLING switch to AC, the MAG switch to ×10, and the A TIME/CM switch to .1 μSEC.

x. CHECK—Display stability; a stable display having less than 1 mm of jitter must be obtained by adjusting the Type 11B2A A TRIG LEVEL and HF STABILITY controls.

y. Change the Type 11B2A A SLOPE switch to — and repeat part x.

z. Set the Type 11B2A A SLOPE switch to + and the A COUPLING switch to AC LF REJ.

aa. Repeat parts v through y of this step.

ab. Set the Type 11B2A A SLOPE switch to + and the A COUPLING switch to DC.

ac. Repeat parts v through y of this step.

ad. Disconnect all test equipment.

7. Check A Sweep 60 Hz to 50 kHz External Triggering

REQUIREMENT—Stable display with 125 millivolts or less of 60 Hz and 50 kHz sine wave signal.

a. Set the Type 11B2A A SLOPE switch to +, A COUPLING switch to AC, MAG switch to OFF and the A TIME/CM switch to 5 mSEC.

b. To the output connector of the low frequency sine wave generator, connect the alligator clip leads of a clip lead adapter (black clip lead to ground, red clip lead to signal output connector). Connect a BNC T adapter to the BNC connector of the clip lead adapter.

c. Connect a 50 ohm coaxial cable to each end of the BNC T adapter, then connect a 50 ohm BNC termination to the other end of each 50 ohm coaxial cable.

d. Connect one 50 ohm coaxial cable/50 ohm BNC termination combination from the BNC T adapter to the Type 11B2A A TRIG IN connector.

e. Connect the second 50 ohm coaxial cable/50 ohm BNC termination combination from the BNC T adapter to the 10-series input connector being used.

f. Set the 10-series volts/cm switch to .05 on the channel being used.

g. Adjust the frequency and amplitude controls on the low frequency generator to produce a 60 Hz sine wave display 2.5 cm high on the Type 647A CRT.

h. CHECK—Display stability; a stable display must be obtained by adjusting the Type 11B2A A TRIG LEVEL control.

i. Change the Type 11B2A A SLOPE to — and repeat part h.

j. Set the Type 11B2A A SLOPE switch to + and the A COUPLING switch to DC.

k. Repeat parts g through i of this step.

l. Adjust the frequency and amplitude controls on the low frequency generator to produce a 50 kHz sine wave display 2.5 cm high on the Type 647A CRT.

m. Set the Type 11B2A A SLOPE switch to +, A COUPLING switch to AC, and the A TIME/CM switch to 20 μSEC.

n. CHECK—Display stability; a stable display must be obtained by adjusting the Type 11B2A A TRIG LEVEL control.

o. Change the Type 11B2A A SLOPE switch to — and repeat part n.

p. Set the Type 11B2A A SLOPE switch to + and the A COUPLING switch to DC.

q. Repeat parts l through o of this step.

r. Disconnect all test equipment.

8. Check A Sweep 50 kHz to 100 MHz Internal Triggering

REQUIREMENT—Stable display with 3 mm or less of display amplitude of 50 kHz and 20 MHz sine wave signal, and with 2 cm or less of display amplitude of 100 MHz sine wave signal.

a. Set the Type 11B2A A SLOPE switch to —, A COUPLING switch to AC and the A SOURCE to INT.

b. Connect a 5 ns coaxial cable to the output connector of medium frequency constant amplitude sine wave generator, then connect a 50 ohm GR to BNC termination to the other end of the 5 ns coaxial cable.

c. Connect the 5 ns coaxial cable/50 ohm GR to BNC termination combination from the medium frequency generator to the 10-series input connector being used.

d. Set the 10-series volts/cm switch to 2 on the channel being used.

e. Adjust the frequency and amplitude controls on the medium frequency generator to produce a 50 kHz sine wave display 3 mm high on the Type 647A CRT.

f. CHECK—Display stability; a stable display must be obtained by adjusting the Type 11B2A A TRIG LEVEL control.

g. Change the Type 11B2A A SLOPE switch to — and repeat part f.

h. Set the Type 11B2A A SLOPE switch to + and the A COUPLING switch to AC LF REJ.

i. Repeat parts e through f of this step.

j. Set the Type 11B2A A SLOPE switch to + and the A COUPLING switch to DC.

k. Repeat parts e through g of this step.

l. Adjust the frequency and amplitude controls on the medium frequency generator to produce a 20 MHz sine wave display 3 mm high on the Type 647A CRT.

m. Set the Type 11B2A A SLOPE switch to +, A COUPLING switch to AC, the MAG switch to ×10, and the A TIME/CM switch to .5 μSEC.

n. CHECK—Display stability; a stable display must be obtained by adjusting the Type 11B2A A TRIG LEVEL control.

o. Change the Type 11B2A A SLOPE switch to — and repeat part n.

p. Set the Type 11B2A A SLOPE switch to + and the A COUPLING switch to AC LF REJ.

q. Repeat parts l through o of this step.

r. Set the Type 11B2A SLOPE switch to + and the A COUPLING switch to DC.

s. Repeat parts l through o of this step.

t. Adjust the frequency and amplitude controls on the medium frequency generator to produce a 100 MHz sine wave display 2 cm high on the Type 647A CRT.

u. Set the Type 11B2A A SLOPE switch to +, A COUPLING switch to AC, the MAG switch to ×10, and the A TIME/CM switch to .1 μSEC.

v. CHECK—Display stability; a stable display having less than 1 mm of jitter must be obtained by adjusting the Type 11B2A A TRIG LEVEL and HF STABILITY controls.

w. Change the Type 11B2A A SLOPE switch to — and repeat part v.

x. Set the Type 11B2A A SLOPE switch to + and the A COUPLING switch to AC LF REJ.

y. Repeat parts b through w of this step.

z. Set the Type 11B2A A SLOPE switch to + and the A COUPLING switch to DC.

aa. Repeat parts b through w of this step.

ab. Disconnect all test equipment.

9. Check A Sweep 60 Hz to 50 kHz Internal Triggering

REQUIREMENT—Stable display with 3 mm or less of display amplitude of 60 Hz and 50 kHz sine wave signal.

a. Set the Type 11B2A A SLOPE switch to +, A COUPLING switch to AC, MAG switch to OFF and the A TIME/CM switch to 5 mSEC.

b. To the output connector of a low frequency sine wave generator, connect the alligator clip leads of a clip lead adapter (black clip lead to ground, red clip lead to signal output connector).

c. Connect a 50 ohm coaxial cable to the BNC connector of the clip lead adapter, then connect a 50 ohm BNC termination to the other end of the 50 ohm coaxial cable.

d. Connect the 50 ohm coaxial/50 ohm BNC termination combination from the low frequency generator to the 10-series input connector being used.

e. Set the 10-series volts/cm switch to 2 on the channel being used.

f. Adjust the frequency and amplitude controls on the low frequency generator to produce a 60 Hz sine wave display 3 mm high on the Type 647A CRT.

g. CHECK—Display stability; a stable display must be obtained by adjusting the Type 11B2A A TRIG LEVEL control.

h. Change the Type 11B2A A SLOPE switch to — and repeat part g.

i. Set the Type 11B2A A SLOPE switch to + and the A COUPLING switch to DC.

j. Repeat parts f through h of this step.

k. Adjust the frequency and amplitude controls on the low frequency generator to produce a 50 kHz sine wave display 3 mm high on the Type 647A CRT.

l. Set the Type 11B2A A SLOPE switch to +, A COUPLING switch to AC, and the A TIME/CM switch to 20 μSEC.

m. CHECK—Display stability; a stable display must be obtained by adjusting the Type 11B2A A TRIG LEVEL control.

n. Change the Type 11B2A A SLOPE switch to — and repeat part m.

o. Set the Type 11B2A A SLOPE switch to + and the A COUPLING switch to DC.

p. Repeat parts k through n of this step.

q. Disconnect all test equipment.

10. Check B Slope Switch Operation

REQUIREMENT—B SLOPE switch at +, beginning of display rising. B SLOPE switch at —, beginning of display falling.

a. Reset the following Type 11B2A controls.

A SLOPE	+
A COUPLING	AC
A TIME/CM	1 mSEC
B TIME/CM	1 mSEC

b. Connect a 10× probe from the 10-series input connector being used to a sine wave signal source of power line frequency.

c. Set the 10-series volts/cm switch for a CRT display about 3 cm high.

d. Adjust the Type 11B2A A TRIG LEVEL control to obtain a stable display, then set the HORIZ DISPLAY switch to B DLY'D BY A (triggered) and adjust the B TRIG LEVEL control to obtain a stable display.

e. CHECK—Display polarity against the Type 11B2A B SLOPE switch polarity; the beginning of the sine wave display should be rising.

f. Set the Type 11B2A B SLOPE switch to —.

g. CHECK—Display polarity against the Type 11B2A B SLOPE switch polarity; the beginning of the sine wave display should be falling.

h. Set the Type 11B2A TRIG MODE switch to AUTO and the B SLOPE switch to +.

i. Repeat parts e through g of this step.

j. Disconnect the 10× probe.

11. Check B Sweep 50 kHz to 100 MHz External Triggering

REQUIREMENT—Stable display with 200 millivolts or less of 50 kHz and 20 MHz sine wave signal and with 300 millivolts or less of 100 MHz sine wave signal.

a. Reset the following Type 11B2A controls.

TRIG MODE	NORM
B SOURCE	EXT
B SLOPE	+
HORIZ DISPLAY	A
A TIME/CM	20 μSEC
B TIME/CM	20 μSEC

b. Connect a 50 ohm GR power divider adapter to the output connector of a medium frequency constant sine wave generator.

c. Connect a 5 ns coaxial cable to each end of the 50 ohm GR divider adapter, then connect a 50 ohm GR to BNC termination to the other end of each 5 ns coaxial cable.

d. Connect one 5 ns coaxial cable/50 ohm GR to BNC termination combination from the 50 ohm GR power divider to the Type 11B2A B TRIG IN connector.

e. Connect the second 5 ns coaxial cable/50 ohm to BNC termination combination from the 50 ohm GR power divider to the 10-series input connector being used.

f. Set the 10-series volts/cm switch to .05 on the channel being used.

g. Adjust the frequency and amplitude controls on the medium frequency generator to produce a 50 kHz sine wave display 4 cm high on the Type 647A CRT.

h. Adjust the Type 11B2A A TRIG LEVEL control to obtain a stable display, then set the HORIZ DISPLAY switch to B DLY'D BY A (triggered).

i. CHECK—Display stability; a stable display must be obtained by adjusting the Type 11B2A B TRIG LEVEL control.

j. Change the Type 11B2A B SLOPE to — and repeat part i.

k. Set the Type 11B2A B COUPLING switch to DC and the B SLOPE switch to +.

l. Repeat parts g through j of this step.

m. Set the Type 11B2A HORIZ DISPLAY switch to A.

n. Adjust the frequency and amplitude controls on the medium frequency generator to produce a 20 MHz sine wave display 4 cm high on the Type 647A CRT.

o. Set the Type 11B2A B COUPLING switch to AC, B SLOPE switch to +, the MAG switch to ×10, the A TIME/CM switch to .5 μSEC and the B TIME/CM switch to .5 μSEC.

p. Adjust the Type 11B2A A TRIG LEVEL control to obtain a stable display, then set the HORIZ DISPLAY switch to B DLY'D by A (triggered).

q. CHECK—Display stability; a stable display must be obtained by adjusting the Type 11B2A B TRIG LEVEL control.

r. Change the Type 11B2A B SLOPE switch to — and repeat part q.

s. Set the Type 11B2A B COUPLING switch to DC and the B SLOPE switch to +.

t. Repeat parts n through r of this step.

u. Set the Type 11B2A HORIZ DISPLAY switch to A.

v. Adjust the frequency and amplitude controls on the medium frequency generator to produce a 100 MHz sine wave display 6 cm high on the Type 647A CRT.

w. Set the Type 11B2A B COUPLING switch to AC, B SLOPE switch to +, the MAG switch to ×10, the A TIME/CM switch to .1 μSEC and the B TIME/CM switch to .1 μSEC.

x. Adjust the Type 11B2A A TRIG LEVEL control to obtain a stable display, then set the HORIZ DISPLAY switch to B DLY'D BY A (triggered).

y. CHECK—Display stability; a stable display having less than 1 mm of jitter must be obtained by adjusting the Type 11B2A B TRIG LEVEL control.

z. Change the Type 11B2A A SLOPE switch to — and repeat part y.

aa. Set the Type 11B2A B COUPLING switch to DC and the B SLOPE switch to +.

ab. Repeat parts v through z of this step.

ac. Disconnect all test equipment.

12. Check B Sweep 60 Hz to 50 kHz External Triggering

REQUIREMENT—Stable display with 200 millivolts or less of 60 Hz and 50 kHz sine wave signal.

a. Set the Type 11B2A B COUPLING switch to AC, B SLOPE switch to +, HORIZ DISPLAY to A, MAG switch to OFF, A TIME/CM switch to 5 mSEC and B TIME/CM switch to 5 mSEC.

b. To the output connector of a low frequency sine wave generator, connect the alligator clip leads of a clip lead adapter (black clip lead to ground, red clip lead to signal output connector). Connect a BNC T adapter to the BNC connector of the clip lead adapter.

c. Connect a 50 ohm coaxial cable to each end of the BNC T adapter, then connect a 50 ohm BNC termination to the other end of each 50 ohm coaxial cable.

d. Connect one 50 ohm coaxial cable/50 ohm BNC termination combination from the BNC T adapter to the Type 11B2A B TRIG IN connector.

e. Connect the second 50 ohm coaxial cable/50 ohm BNC termination combination from the BNC T adapter to the 10-series input connector being used.

f. Set the 10-series volts/cm switch to .05 on the channel being used.

g. Adjust the frequency and amplitude on the low frequency generator to produce a 60 Hz sine wave display 4 cm high on the Type 647A CRT.

h. Adjust the Type 11B2A A TRIG LEVEL control to obtain a stable display, then set the HORIZ DISPLAY switch to B DLY'D BY A (triggered).

i. CHECK—Display stability; a stable display must be obtained by adjusting the Type 11B2A B TRIG LEVEL control.

j. Change the Type 11B2A B SLOPE switch to — and repeat part i.

k. Set the Type 11B2A B COUPLING switch to DC and the B SLOPE switch to +.

l. Repeat parts g through j of this step.

m. Set the Type 11B2A HORIZ DISPLAY switch to A.

n. Adjust the frequency and amplitude controls on the low frequency generator to produce a 50 kHz sine wave display 4 cm high on the Type 647A CRT.

o. Set the Type 11B2A B COUPLING switch to AC, B SLOPE switch to +, the A TIME/CM switch to 20 μSEC and the B TIME/CM switch to 20 μSEC.

p. Adjust the Type 11B2A A TRIG LEVEL control to obtain a stable display, then set the HORIZ DISPLAY switch to B DLY'D BY A (triggered).

q. CHECK—Display stability; a stable display must be obtained by adjusting the Type 11B2A B TRIG LEVEL control.

r. Change the Type 11B2A B SLOPE switch to — and repeat part q.

s. Set the Type 11B2A B COUPLING switch to DC and the B SLOPE switch to +.

t. Repeat parts n through r of this step.

u. Disconnect all test equipment.

13. Check B Sweep 50 kHz to 100 MHz Internal Triggering

REQUIREMENT—Stable display with 5 mm or less display amplitude of 50 kHz, and 20 MHz sine wave signal and with 3 cm or less display amplitude of 100 MHz sine wave signal.

a. Set the Type 11B2A B COUPLING switch to AC, B SOURCE switch to INT, B SLOPE switch to + and the HORIZ DISPLAY switch to A.

b. To the output connector of a medium frequency constant amplitude sine wave generator connect a 5 ns coaxial cable, then connect a 50 ohm GR to BNC termination to the other end of the 5 ns coaxial cable.

c. Connect the 5 ns coaxial cable/50 ohm GR to BNC termination combination from the medium frequency generator to the 10-series input connector being used.

d. Set the 10-series volts/cm switch on the channel being used to 1.

e. Adjust the frequency and amplitude controls on the medium frequency generator to produce a 50 kHz sine wave display 5 mm high on the Type 647A CRT.

f. Adjust the Type 11B2A A TRIG LEVEL control to obtain a stable display, then set the HORIZ DISPLAY switch to B DLY'D BY A (triggered).

g. CHECK—Display stability; a stable display must be obtained by adjusting the Type 11B2A B TRIG LEVEL control.

h. Change the Type 11B2A B SLOPE switch to — and repeat part g.

i. Set the Type 11B2A B COUPLING switch to DC and the B SLOPE switch to +.

j. Repeat parts e through h of this step.

k. Set the Type 11B2A HORIZ DISPLAY switch to A.

l. Adjust the frequency and amplitude controls on the medium frequency generator to produce a 20 MHz sine wave display 5 mm high on the Type 647A CRT.

m. Set the Type 11B2A B COUPLING switch to AC, B SLOPE switch to +, MAG switch to ×10, the A TIME/CM switch to .5 μSEC and the B TIME/CM switch to .5 μSEC.

n. Adjust the Type 11B2A A TRIG LEVEL control to obtain a stable display, then set the HORIZ DISPLAY switch to B DLY'D BY A (triggered).

o. CHECK—Display stability; a stable display must be obtained by adjusting the Type 11B2A B TRIG LEVEL control.

p. Change the Type 11B2A B SLOPE switch to — and repeat part o.

q. Set the Type 11B2A B COUPLING switch to DC and the B SLOPE switch to +.

r. Repeat parts l through q of this step.

s. Set the Type 11B2A HORIZ DISPLAY switch to A.

t. Adjust the frequency and amplitude controls on the medium frequency generator to produce a 100 MHz sine wave display 3 cm high on the Type 647A CRT.

u. Set the Type 11B2A B COUPLING switch to AC, B SLOPE switch to +, the MAG switch to ×10, the A TIME/CM switch to .1 μSEC, and the B TIME/CM switch to .1 μSEC.

v. Adjust the Type 11B2A A TRIG LEVEL control to obtain a stable display, then set the HORIZ DISPLAY switch to B DLY'D BY A (triggered).

w. CHECK—Display stability; a stable display having less than 1 mm of jitter must be obtained by adjusting the Type 11B2A B TRIG LEVEL control.

x. Change the Type 11B2A B SLOPE switch to —and repeat part w.

y. Set the Type 11B2A B COUPLING switch to DC and the B SLOPE switch to +.

z. Repeat parts t through x of this step.

aa. Disconnect all test equipment.

14. Check B Sweep 60 Hz to 50 kHz Internal Triggering

REQUIREMENT—Stable display with 5 mm or less display amplitude of 60 Hz and 50 kHz sine wave signal.

a. Set the Type 11B2A B COUPLING switch to AC, B SLOPE switch to +, HORIZ DISPLAY switch to A, MAG switch to OFF, A TIME/CM switch to 5 mSEC, and B TIME/CM switch to 5 mSEC.

b. To the output connector of a low frequency sine wave generator, connect the alligator clip leads of a clip lead adapter (black clip lead to ground, red clip lead to signal output connector).

c. Connect a 50 ohm coaxial cable to the BNC connector of the clip adapter, then connect a 50 ohm BNC termination to the other end of the 50 ohm coaxial cable.

d. Connect the 50 ohm coaxial cable/50 ohm BNC termination combination from the low frequency generator to the 10-series input connector being used.

e. Set the 10-series volts/cm switch to 1 on the channel being used.

f. Adjust the frequency and amplitude controls on the low frequency generator to produce a 60 Hz sine wave display 5 mm high on the Type 647A CRT.

g. Adjust the Type 11B2A A TRIG LEVEL control to obtain a stable display, then set the HORIZ DISPLAY switch to B DLY'D A (triggered).

h. CHECK—Display stability; a stable display must be obtained by adjusting the Type 11B2A B TRIG LEVEL control.

i. Change the Type 11B2A B SLOPE switch to — and repeat part h.

j. Set the Type 11B2A B COUPLING switch to DC and the B SLOPE switch to +.

k. Repeat parts f through i of this step.

l. Set the Type 11B2A HORIZ DISPLAY switch to A.

m. Adjust the frequency and amplitude controls on the low frequency generator to produce a 50 kHz sine wave display 5 mm high on the Type 647A CRT.

n. Set the Type 11B2A B COUPLING switch to AC, B SLOPE switch to +, the A TIME/CM switch to 20 μSEC and the B TIME/CM switch to 20 μSEC.

o. Adjust the Type 11B2A A TRIG LEVEL control to obtain a stable display, then set the HORIZ DISPLAY switch to B DLY'D BY A (triggered).

p. CHECK—Display stability; a stable display must be obtained by adjusting the Type 11B2A B TRIG LEVEL control.

q. Change the Type 11B2A B SLOPE switch to — and repeat part p.

r. Set the Type 11B2A B COUPLING switch to DC and the B SLOPE switch to +.

s. Repeat parts m through q of this step.

t. Disconnect all test equipment.

15. Check B Trigger Level Mechanical Zero and Range

REQUIREMENT—B TRIG LEVEL control knob dot opposite 0 when control is at electrical zero. B TRIG LEVEL control has a range greater than ±10 volts when B SOURCE switch is set to EXT.

a. Set the Type 11B2A TRIG MODE switch to NORM, B COUPLING switch to DC, B SLOPE switch to +, HORIZ DISPLAY switch to A, A TIME/CM switch to 1 mSEC, and B TIME/CM switch to 1 mSEC.

b. Connect a 10× probe from the 10-series input connector being used to a sine wave signal source of power line frequency.

c. Set the 10-series volts/cm switch for a CRT display about 3 cm high and set the position control to midrange.

d. Adjust the Type 11B2A A TRIG LEVEL control to obtain a stable display, then set the HORIZ DISPLAY switch to B DLY'D BY A (triggered).

e. Rotate the B TRIG LEVEL control slowly from one extreme to the other extreme, noting the two positions of the control at which the display just triggers.

f. CHECK—B TRIG LEVEL control position; when the B TRIG LEVEL control is centered between the two positions noted above, the dot on the B TRIG LEVEL control should be opposite the 0. If it is not, loosen the knob set screw with a 1/16 hexagonal wrench and reposition the knobs so the dot is opposite the 0.

g. Disconnect the 10× probe.

h. Set the Type 11B2A TRIG MODE switch to AUTO, B COUPLING switch to AC, B SOURCE switch to EXT, and the HORIZ DISPLAY switch to A.

i. Connect a BNC T adapter to the Type 647A cal out connector, then connect a 50 ohm coaxial cable from one end of the BNC T adapter to the 10-series input connector being used.

j. Set the Type 647A calibrator switch for an output square wave amplitude of 20 volts.

k. Adjust the 10-series volts/cm switch to obtain a display 2 cm high on the CRT.

l. Adjust the Type 11B2A A TRIG LEVEL control to obtain a stable display, then set the HORIZ DISPLAY switch to B DLY'D BY A (triggered).

m. Rotate the B TRIG LEVEL control slowly from one extreme to the other extreme.

n. CHECK—Display stability; display must not be triggered when the B TRIG LEVEL control is at either extreme.

o. Disconnect all test equipment.

16. Check Single Sweep Triggering Mode

REQUIREMENT—Sweep should run only once for each time the sweep generator is armed except when a repetitive signal is connected to pin F of the Type 647A J101 connector, at which time the sweep should run recurrently. The RESET light should be lit when the sweep is armed, and should extinguish after the sweep has run.

a. Reset the following front-panel controls.

Type 11B2A	
TRIG MODE	NORM
A TRIG LEVEL	Midrange
HF STABILITY	Midrange
B SOURCE	INT
B TRIG LEVEL	Midrange
HORIZ DISPLAY	A
10-Series	
Volts/Cm	10
Type 647A	
Calibrator	20 V

b. Connect a 50 ohm coaxial cable from the Type 647A cal out connector to the 10-series input connector being used.

c. Set the Type 647A calibrator switch for an output square-wave amplitude of 20 volts.

d. Adjust the 10-series volts/cm switch to obtain a display 2 cm high on the Type 647A CRT.

e. Adjust the Type 11B2A A TRIG LEVEL control to obtain a stable display.

f. Set the 10-series input coupling switch to gnd for the channel being used and note that the display disappears.

g. Set the Type 11B2A TRIG MODE switch to SINGLE SWEEP and momentarily depress the RESET button.

h. CHECK—Reset light; light should now be lit.

i. Set the 10-series input coupling switch for the channel being used to AC.

j. CHECK—Display and reset light; sweep should run once and only once. After the sweep has run once, reset light should extinguish.

k. Insert a BNC T adapter between the Type 647A cal out connector and the 50 ohm coaxial cable. Connect another 50 ohm coaxial cable to the third connector on the T adapter.

l. Connect a clip lead adapter to the unconnected end of the second 50 ohm coaxial cable. Connect the red lead of the clip lead adapter to pin F of the J101 connector (on rear panel of Type 647A) via a short piece of wire. Connect the black lead of the clip lead adapter to a ground point.

m. Set the Type 647A calibrator switch for an output square-wave amplitude of 5 volts.

n. Disconnect the red lead of the clip lead adapter from pin F of the J101 connector, and note that there is no display on the Type 647A CRT.

o. Reconnect the red lead of the clip lead adapter to pin F of the J101 connector.

p. CHECK—Display; sweep should run recurrently, i.e., just as it would if Type 11B2A TRIG MODE switch were set to NORM.

q. Turn off the Type 647A calibrator and disconnect all test equipment.

17. Check Delayed Sweep Start and A Sweep Calibration

REQUIREMENT—Delayed sweep should start near the leading edge of the time marker aligned with the graticule line for which the DELAY TIME MULT control is set. Time markers at the same rate as the sweep rate should produce a display of one time marker per centimeter. Time markers at the first and ninth graticule lines should be within 1 mm of the graticule lines.

a. Set the Type 11B2A TRIG MODE switch to AUTO, A TIME/CM switch to 1 mSEC, the B TIME/CM switch to 5 μSEC, and DELAY TIME MULT control to 1.00.

b. Connect a 50 ohm coaxial cable from the time mark generator marker output connector through a 50 ohm termination to the 10-series input connector being used.

c. Set the time mark generator controls to produce only 1 ms time markers.

d. Set the 10-series volts/cm switch for a display about 3 cm in amplitude.

e. Adjust the Type 11B2A A TRIG LEVEL control for a stable display, then set the HORIZ DISPLAY switch to A INTEN BY B (untriggered).

f. Horizontally position the display so the second time marker is aligned with the first graticule line; see Fig. 5-1.

g. CHECK—Brightened pulse trace position; it should be brightening the second time marker.

h. Set the Type 11B2A DELAY TIME MULT control to 9.00.

i. CHECK—Brightened pulse trace position; it should be brightening the tenth time marker.

j. Set the Type 11B2A HORIZ DISPLAY switch to B DLY'D BY A (untriggered) and the DELAY TIME MULT control to 1.00.

k. CHECK—Brightened pulse trace position; it should start near the beginning of the sweep.

l. Set the Type 11B2A DELAY TIME MULT control to 9.00.

m. CHECK—Brightened pulse trace position; it should start near the beginning of the sweep.

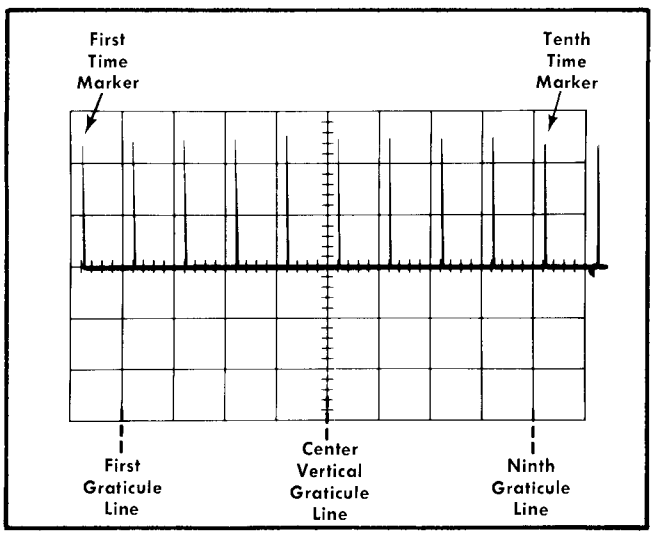

Fig. 5-1. Illustration showing the nomenclature being used.

18. Check Delay Time Multiplier Control Linearity

REQUIREMENT—DELAY TIME MULT control linearity within 1.5 minor dial divisions of the required dial reading at all dial settings between 1.00 and 9.00.

a. Set the Type 11B2A DELAY TIME MULT control to 8.00, then either rotate the control clockwise or counterclockwise until the brightened pulse starts at the beginning of the sweep.

b. CHECK—DELAY TIME MULT dial reading; it must read with 1.5 minor dial divisions of 8.00 major dial divisions.

c. Repeat parts a and b of this step using Type 11B2A DELAY TIME MULT control settings of 2.00, 3.00, 4.00, 5.00, 6.00 and 7.00. In all cases the error must not exceed 1.5 minor dial divisions.

19. Check Normal and Magnifier Gain

REQUIREMENT—Time markers at the same rate as the sweep rate should produce a display of one time marker per centimeter. The time markers should be within 1 mm of their respective graticule lines for both ×1 and ×10 sweeps.

a. Set the Type 11B2A HORIZ DISPLAY switch to A.

b. Check that the second time marker is exactly lined up with the first graticule line.

c. CHECK—Tenth time marker alignment; it should be within 1 mm of the ninth graticule line.

d. CHECK—Time marker linearity; no time marker between the first and ninth graticule lines should be more than 1 mm away from its respective graticule line.

e. Set the time mark generator controls for only 0.1 ms time markers.

f. Reset the 10-series volts/cm switch if necessary to obtain a display about 3 cm in amplitude.

g. Set the Type 11B2A MAG switch to ×10 and adjust the A TRIG LEVEL control to obtain a stable display.

h. Align the second time marker exactly with the first graticule line.

i. CHECK—Tenth time marker alignment; it should be within 1 mm of the ninth graticule line.

j. CHECK—Time marker linearity; no time marker between the first and ninth graticule lines should be more than 1 mm away from its respective graticule line.

20. Check Magnifier Registration

REQUIREMENT—Time marker aligned with center vertical graticule line in ×10 sweep should remain within 1 mm of that graticule line in ×1 sweep.

a. Set the Type 11B2A MAG switch to OFF.

b. Set the time mark generator controls for only 1 ms time markers.

c. Adjust the Type 11B2A A TRIG LEVEL control to obtain a stable display.

d. Position the sixth time marker so it is lined up with the center vertical graticule line.

e. Set the Type 11B2A MAG switch to ×10 and reposition the time marker near the center vertical graticule line so it is exactly lined up with the center vertical graticule line.

f. Set the Type 11B2A MAG switch to OFF.

g. CHECK—Sixth time marker location; it should be within 1 mm of the center vertical graticule line.

21. Check A Sweep Length

REQUIREMENT—Sweep length between 10.5 cm and 11 cm.

a. Set the Type 11B2A MAG switch to OFF.

b. Adjust the A TRIG LEVEL control until a stable display has been obtained.

c. Position the third time marker so it is exactly lined up with the first graticule line.

d. CHECK—Position of sweep ending; should lie somewhere near three-fourths of the way from the ninth to the tenth graticule line, i.e., sweep length should lie between 10.5 cm and 11 cm.

22. Check B Sweep Calibration

REQUIREMENT—Time markers at the same rate as the sweep rate should produce a one time marker per centimeter display with the time markers at the first and ninth graticule lines within 1 mm of the graticule lines.

a. Set the Type 11B2A HORIZ DISPLAY switch to B DLY'D BY A (untriggered), A TIME/CM switch to 2 mSEC, B TIME/CM switch to 1 mSEC and the DELAY TIME MULT to 1.00. Adjust the A TRIG LEVEL control for a stable display.

b. Position the display so the second time marker is exactly lined up with the first graticule line.

c. CHECK—Tenth time marker alignment; it should be within 1 mm of the ninth graticule line.

23. Check B Sweep Length

REQUIREMENT—Sweep length between 10.2 cm and 11 cm.

a. Position the third time marker so it is exactly lined up with the first graticule line.

b. CHECK—Position of sweep ending; should lie about three-quarters of the distance from the ninth to the tenth graticule line, i.e., sweep length should lie between 10.2 cm and 11 cm.

24. Check A and B Variable Time/Cm Controls and Uncal Light

REQUIREMENT—Each variable must attenuate the sweep at least 2.5:1 when turned fully counterclockwise. UNCAL light must be lit whenever either variable is away from its CALIB position.

a. Note that there is now one time marker per centimeter of graticule area and the UNCAL light is not lit. Rotate the Type 11B2A B VARIABLE (B TIME/CM) control to its fully counterclockwise position. Shortening of the sweep is normal at this point.

b. CHECK—Number of time markers per centimeter, UNCAL light and control operation; there should be at least five time markers per two centimeters of graticule area, indicating an attenuation ratio of at least 2.5:1. The UNCAL light must be lit whenever the Type 11B2A B VARIABLE (B TIME/CM) control is away from its CALIB position. The Type 11B2A B VARIABLE (B TIME/CM) control must operate smoothly from one extreme to the other extreme.

c. Return the Type 11B2A B VARIABLE (B TIME/CM) control to its CALIB position.

d. Set the Type 11B2A HORIZ DISPLAY switch to A and the A TIME/CM switch to 1 mSEC.

e. Note that there is now one time marker per centimeter of graticule area and the UNCAL light is not lit. Rotate the Type 11B2A VARIABLE A (A TIME/CM) control to its fully counterclockwise position.

f. CHECK—Number of time markers per centimeter, UNCAL light and control operation; there should be at least five time markers per two centimeters of graticule area, indicating an attenuation ratio of at least 2.5:1. The UNCAL light must be lit whenever the Type 11B2A VARIABLE A (A TIME/CM) control is away from its CALIB position. The Type 11B2A VARIABLE A (A TIME/CM) control must operate smoothly from one extreme to the other extreme.

g. Return the Type 11B2A VARIABLE A (A TIME/CM) control to its CALIB position.

25. Check A Sweep One Microsecond Sweep Rate

REQUIREMENT—Sweep rate within 1.5% of the indicated sweep rate.

a. Set the Type 11B2A A TIME/CM switch to 1 μSEC, the B TIME/CM switch to .1 μSEC and the DELAY TIME MULT to 1.00.

b. Set the time mark generator controls to produce only 1 μs time markers.

c. Reset the 10-series volts/cm switch if necessary to obtain a display about 3 cm in amplitude.

d. Adjust the Type 11B2A A TRIG LEVEL for a stable display.

e. CHECK—Time marker display; there should be one time marker per centimeter of display within 1 mm.

f. Set the Type 11B2A HORIZ DISPLAY switch to A INTEN BY B (untriggered) and adjust the DELAY TIME MULT control so the second time marker is being brightened, i.e., the DELAY TIME MULT control set near 1.00.

g. Set the Type 11B2A HORIZ DISPLAY switch to B DLY'D BY A (untriggered) and adjust the DELAY TIME MULT control so that the sweep starts exactly at the top of the magnified second time marker.

h. Note and record the difference between the DELAY TIME MULT control reading and 1.00.

i. Set the Type 11B2A HORIZ DISPLAY switch to A INTEN BY B (untriggered) and adjust the DELAY TIME MULT control to 9.00 ± the number recorded in part h. The tenth time marker should now be brightened.

j. Set the Type 11B2A HORIZ DISPLAY switch to B DLY'D BY A (untriggered).

k. Check—Sweep start; sweep should start near the top of the magnified tenth time marker.

26. Check A Sweep Two Microsecond To Five Second Sweep Rates

REQUIREMENT—Sweep rate within 1.5% (except 0.1 to 5 s sweep rates within 3%) of the indicated sweep rate.

a. Set the Type 11B2A HORIZ DISPLAY switch to A INTEN BY B (untriggered); A TIME/CM switch to 2 μSEC; the B TIME/CM switch to .1 μSEC and the DELAY TIME MULT to 1.00.

b. Set the time mark generator controls so it will produce only 1 μs time markers.

c. Reset the 10-series volts/cm switch if necessary to obtain a display about 3 cm in amplitude.

d. Adjust the Type 11B2A A TRIG LEVEL control for a stable display.

e. Adjust the DELAY TIME MULT control so the third time marker is being brightened, i.e., the DELAY TIME MULT control set near 1.00.

f. Set the Type 11B2A HORIZ DISPLAY switch to B DLY'D BY A (untriggered) and adjust the DELAY TIME MULT control so that the sweep starts exactly at the top of the magnified third time marker.

g. Note and record the difference between the DELAY TIME MULT control reading and 1.00.

h. Set the Type 11B2A HORIZ DISPLAY switch to A INTEN BY B (untriggered) and adjust the DELAY TIME MULT control to 9.00 ± the number recorded in part g. The nineteenth time marker should now be brightened.

i. Set the Type 11B2A HORIZ DISPLAY switch to B DLY'D BY A (untriggered).

j. CHECK—Sweep start; sweep should start within 0.03 DELAY TIME MULT control divisions of the exact top of the magnified nineteenth time marker.

k. Repeat parts a through j of this step for each Type 11B2A A TIME/CM switch setting in Table 5-1, substituting the Type 11B2A A TIME/CM and B TIME/CM switch settings, time markers and maximum DELAY TIME MULT control error information in the parts of this step where applicable.

27. Check A Sweep .1 Microsecond To .5 Microsecond Sweep Rates

REQUIREMENT—Sweep rate within 1.5% of the indicated sweep rate.

a. Set the Type 11B2A HORIZ DISPLAY switch to A and the A TIME/CM switch to .1 μSEC.

b. Set the time mark generator controls so it will produce only 0.1 μs time markers.

c. Adjust the Type 11B2A A TRIG LEVEL for a stable display.

d. Position the second time marker so it is exactly aligned with the first graticule line.

e. CHECK—Tenth time marker location; it should be within 1 mm of the ninth graticule line.

f. Set the Type 11B2A A TIME/CM switch to .2 μSEC and adjust the A TRIG LEVEL control to obtain a stable display.

g. Align the third time marker exactly with the first graticule line.

h. CHECK—Nineteenth time marker location, it should be within 1 mm of the ninth graticule line.

i. Set the Type 11B2A A TIME/CM switch to .5 μSEC.

j. Set the time mark generator controls so it will produce only 1 μs time markers.

TABLE 5-1

Checking A Sweep 2 μs to 5 s Sweep Rates

A TIME/CM Switch Setting	B TIME/CM Switch Setting	Time Markers Applied From Time Mark Generator	Alignment Time Marker	Check Time Marker	Maximum Type 11B2A DELAY TIME MULT Control Error
5 μSEC	.5 μSEC	5 μs	2nd	10th	±0.03
10 μSEC	1 μSEC	10 μs	2nd	10th	±0.03
20 μSEC	1 μSEC	10 μs	3rd	19th	±0.03
50 μSEC	5 μSEC	50 μs	2nd	10th	±0.03
.1 μSEC	10 μSEC	.1 μs	2nd	10th	±0.03
.2 μSEC	10 μSEC	.1 μs	3rd	19th	±0.03
.5 mSEC	50 μSEC	.5 ms	2nd	10th	±0.03
1 mSEC	.1 mSEC	1 ms	2nd	10th	±0.03
2 mSEC	.1 mSEC	1 ms	3rd	19th	±0.03
5 mSEC	.5 mSEC	5 ms	2nd	10th	±0.03
10 mSEC	1 mSEC	10 ms	2nd	10th	±0.03
20 mSEC	1 mSEC	10 ms	3rd	19th	±0.03
50 mSEC	5 mSEC	50 ms	2nd	10th	±0.03
.1 SEC[1]	10 mSEC	.1 s	2nd	10th	±0.03
.2 SEC	10 mSEC	.1 s	3rd	19th	±0.03
.5 SEC	50 mSEC	.5 s	2nd	10th	±0.03
1 SEC	.1 SEC	1 s	2nd	10th	±0.03
2 SEC	.1 SEC	2 s	3rd	19th	±0.03
5 SEC	.5 SEC	5 s	2nd	10th	±0.03

[1]Set the Type 11B2A TRIG MODE switch to NORM, the HORIZ DISPLAY switch to A INTEN BY B and adjust the A TRIG LEVEL for a stable display, then proceed with part a of this step for each of the remaining Type 11B2A A TIME/CM switch settings in Table 5-1.

k. Adjust the Type 11B2A A TRIG LEVEL to obtain a stable display.

l. Align the first time marker exactly with the first graticule line.

m. CHECK—Fifth time marker location; it should be within 1 mm of the ninth graticule line.

28. Check B Sweep .1 Microsecond to 5 Microsecond Sweep Rates

REQUIREMENT—Sweep rate within 1.5% of the indicated sweep rate.

a. Set the Type 11B2A HORIZ DISPLAY switch to B DLY'D BY A (untriggered), A TIME/CM switch to 1 μSEC, B TIME/CM switch to .1 μSEC and the DELAY TIME MULT control to its fully counterclockwise position; that is, for a control reading of about 0.30.

b. Set the time mark generator controls to produce only 0.1 μs time markers.

c. Adjust the Type 11B2A A TRIG LEVEL to obtain a stable display.

d. Align the second time marker exactly with the first graticule line.

e. CHECK—Tenth time marker location; it should be within 1 mm of the ninth graticule line.

f. Set the Type 11B2A B TIME/CM switch to .2 μSEC and adjust the A TRIG LEVEL to obtain a stable display.

g. Align the third time marker exactly with the first graticule line.

h. CHECK—Nineteenth time marker location; it should be within 1 mm of being exactly lined up with the ninth graticule line.

i. Set the Type 11B2A B TIME/CM switch to .5 μSEC.

j. Adjust the time mark generator controls to produce only 1 μs time markers.

k. Adjust the Type 11B2A A TRIG LEVEL to obtain a stable display.

l. Align the first time marker exactly with the first graticule line.

m. CHECK—Fifth time marker location; it should be within 1 mm of the ninth graticule line.

n. Set the Type 11B2A A TIME/CM switch to 10 μSEC, the B TIME/CM switch to 1 μSEC and adjust the A TRIG LEVEL control to obtain a stable display.

o. Align the second time marker exactly with the first graticule line.

p. CHECK—Tenth time marker location; it should be within 1 mm of the ninth graticule line.

q. Set the Type 11B2A B TIME/CM switch to 2 μSEC.

r. Adjust the Type 11B2A A TRIG LEVEL to obtain a stable display.

s. Align the third time marker exactly with the first graticule line.

t. CHECK—Nineteenth time marker location; it should be within 1 mm of the ninth graticule line.

u. Set the Type 11B2A B TIME/CM switch to 5 μSEC.

v. Adjust the time mark generator controls to produce only 5 μs time markers.

w. Adjust the Type 11B2A A TRIG LEVEL to obtain a stable display.

x. Align the second time marker exactly with the first graticule line.

y. CHECK—Tenth time marker location; it should be within 1 mm of the ninth graticule line.

29. Check ×10 Magnifier Accuracy

REQUIREMENT—A and B TIME/CM switch positions of 0.1 μSEC and 0.2 μSEC/DIV, within 3.5% with MAG switch set to ×10; .5 μSEC to 50 mSEC, within 2.5% with MAG switch set to ×10; .1 SEC to 5 SEC, within 4% with MAG switch set to ×10. Magnifier light must be on.

a. Set the MAG switch to ×10.

b. CHECK—Using the A and B TIME/CM switch and time-mark generator settings given in Table 5-2, check B magnified sweep timing within the given tolerances over the middle eight divisions of the magnified display. Adjust the A TRIG LEVEL control as necessary to maintain a stable display. Magnifier light must be on.

TABLE 5-2

A and B Magnified Accuracy

A and B TIME/CM Switch Setting	Time-Mark Generator Output	CRT Display (Markers/Division)	Allowable Error for Given Accuracy
.1 μSEC	10 nanosecond	1	0.28 centimeter (within 3.5%)
.2 μSEC	10 nanosecond	2	
.5 μSEC	50 nanosecond	1	0.2 centimeter (within 2.5%)
1 μSEC	0.1 microsecond	1	
2 μSEC	0.1 microsecond	2	
5 μSEC	0.5 microsecond	1	
10 μSEC	1 microsecond	1	
20 μSEC	1 microsecond	2	
50 μSEC	5 microsecond	1	
.1 mSEC	10 microsecond	1	
.2 mSEC	10 microsecond	2	
.5 mSEC	50 microsecond	1	
1 mSEC	0.1 millisecond	1	
2 mSEC	0.1 millisecond	2	
5 mSEC	0.5 millisecond	1	
10 mSEC	1 millisecond	1	
20 mSEC	1 millisecond	2	
50 mSEC	5 millisecond	1	
.1 SEC	10 millisecond	1	0.32 centimeter (within 4%)
.2 SEC	10 millisecond	2	
.5 SEC	50 millisecond	1	
1 SEC	0.1 second	1	
2 SEC	0.1 second	2	
5 SEC	0.5 second	1	

c. Set the HORIZ DISPLAY switch to A.

d. CHECK—Using the A TIME/CM switch and time-mark generator settings given in Table 5-2, check A magnified sweep timing within the given tolerances over the middle eight divisions of the magnified display. Adjust the A TRIG LEVEL control as necessary to maintain a stable display.

30. Check B Sweep 10 Microsecond To 5 Second Sweep Rates

REQUIREMENT—Sweep rate within 1.5% (except 0.1 to 5 s sweep rates within 3%) of indicated sweep rate.

a. Set the Type 11B2A HORIZ DISPLAY switch to B DLY'D BY A (untriggered), MAG switch to OFF, A TIME/CM switch to 10 μSEC and B TIME/CM switch to 10 μSEC.

b. Set the time mark generator controls to produce only 10 μs time markers.

c. Adjust the Type 11B2A A TRIG LEVEL control for a stable display.

d. Align the first time marker exactly with the first graticule line.

e. CHECK—Ninth time marker location; it should be within 1 mm of the ninth graticule line.

f. Repeat parts a through e of this step for each Type 11B2A B TIME/CM switch setting in Table 5-3, substituting the Type 11B2A A TIME/CM and B TIME/CM switch setting, time markers, alignment time marker (part d), check time marker (part e) and maximum display error information in the parts of this step where applicable.

31. Check B Sweep Delay Time Jitter

REQUIREMENT—Jitter 1 part or less in 20,000 of the available delay interval (10 times the A TIME/CM switch setting).

a. Set the Type 11B2A TRIG MODE switch to AUTO, HORIZ DISPLAY switch to A INTEN BY B (untriggered), A TIME/CM switch to 1 mSEC, B TIME/CM switch to 1 μSEC, and DELAY TIME MULT control to 1.00.

b. Set the time mark generator controls to produce only 1 ms time markers.

c. Adjust the Type 11B2A A TRIG LEVEL control to obtain a stable display.

d. Set the Type 11B2A DELAY TIME MULT control so the second time marker is being brightened by the brightening pulse; then set the HORIZ DISPLAY switch to B DLY'D BY A (untriggered).

e. Adjust the Type 11B2A DELAY TIME MULT control so the leading edge of the magnified time marker is displayed.

f. CHECK—Time marker leading edge jitter; amount of jitter must not be greater than 3 mm.

g. Disconnect all test equipment.

32. Check External Horizontal Deflection Sensitivity and Frequency Response.

REQUIREMENT—Sensitivity: One volt per centimeter when MAG switch is set to OFF. One tenth volt per centimeter when MAG switch is set to ×10. Response: DC to not more than —3 dB at 3 MHz.

a. Reset the following front-panel controls:

Type 11B2A

TRIG MODE	FREE RUN
A TRIG LEVEL	Midrange
HF STABILITY	Midrange
B COUPLING	DC
B SOURCE	EXT
B TRIG LEVEL	Midrange
HORIZ DISPLAY	EXT
A TIME/CM	50 μSEC
B TIME/CM	50 μSEC
DELAY TIME MULT	Fully counterclockwise

Type 647A

Calibrator	5 V

b. Connect a 5 volt square-wave signal via a 50 ohm coaxial cable from the Type 647A cal out connector to the Type 11B2A B TRIG INPUT or EXT INPUT connector.

c. Reduce the Type 647A display intensity to avoid burning the CRT.

d. Vertically and horizontally position the display to the center of the graticule area.

e. CHECK—Distance between spots; it must be between 4.5 cm and 5.5 cm.

f. Set the Type 647A calibrator for a 0.5 volt output square-wave signal.

g. Vertically and horizontally position the display to the center of the graticule area.

h. Set the Type 11B2A MAG switch to ×10.

i. CHECK—Distance between spots; it must be between 4.5 cm and 5.5 cm.

j. Disconnect the 50 ohm coaxial cable and set the Type 11B2A MAG switch to OFF, and the Type 647A calibrator to off.

k. Connect a 5 ns coaxial cable to the output connector of a medium frequency constant amplitude sine wave generator, then connect a 50 ohm GR to BNC termination to the other end of the 5 ns coaxial cable.

TABLE 5-3

Checking B Sweep 10 μs to 5 s Sweep Rates

B TIME/CM Switch Setting	A TIME/CM Switch Setting	Time Markers Applied From Time Mark Generator	Alignment Time Marker	Check Time Marker	Maximum Display Error
20 μSEC	20 μSEC	10 μs	3rd	19th	1 mm
50 μSEC	50 μSEC	50 μs	1st	9th	1 mm
.1 mSEC	.1 mSEC	.1 ms	1st	9th	1 mm
.2 mSEC	.2 mSEC	.1 ms	3rd	19th	1 mm
.5 mSEC	.5 mSEC	.5 ms	1st	9th	1 mm
1 mSEC	1 mSEC	1 ms	1st	9th	1 mm
2 mSEC	2 mSEC	1 ms	3rd	19th	1 mm
5 mSEC	5 mSEC	5 ms	1st	9th	1 mm
10 mSEC	10 mSEC	10 ms	1st	9th	1 mm
20 mSEC	20 mSEC	10 ms	3rd	19th	1 mm
50 mSEC	50 mSEC	50 ms	1st	9th	1 mm
.1 SEC	.1 SEC	.1 s	1st	9th	2 mm
.2 SEC	.2 SEC	.1 s	3rd	19th	2 mm
.5 SEC	.5 SEC	.5 s	1st	9th	2 mm
1 SEC	1 SEC	1 s	1st	9th	2 mm
2 SEC	2 SEC	1 s	3rd	19th	2 mm
5 SEC	5 SEC	5 s	1st	9th	2 mm

l. Connect the 5 ns coaxial cable/50 ohm GR to BNC termination combination from the medium frequency generator to the Type 11B2A B TRIG INPUT OR EXT INPUT connector.

m. Set the medium frequency generator output frequency switch to its fixed frequency (50 kHz).

n. Adjust the output amplitude control of the medium frequency generator until a trace exactly 4 cm long is displayed on the CRT of the Type 647A.

o. Change the medium frequency generator output frequency switch to its variable frequency position.

p. Increase the output frequency of the medium frequency generator until the trace shortens to 2.8 cm.

q. CHECK—Generator output frequency; it should be at least 3 MHz; in other words, bandwidth not more than —3 dB at 3 MHz.

r. Disconnect all test equipment.

33. Check Front-Panel Output Waveforms

REQUIREMENT—+ GATE A and B output signal approximately +15 volts in amplitude. SWEEP A and B output signal approximately +10 volts in amplitude. The wide part of the step function waveform (gate) and the width of the sawtooth waveform should correspond to the duration of the sweep.

a. Set the Type 11B2A HORIZ DISPLAY switch to B DLY'D BY A (untriggered) and the DELAY TIME MULT control fully counterclockwise.

b. Connect a 50 ohm coaxial cable to the test oscilloscope vertical input connector. To the other end of the 50 ohm coaxial cable, connect a BNC to BSM adapter.

c. Connect the test oscilloscope/50 ohm coaxial cable/BNC to BSM adapter to the + GATE B front panel connector.

d. Set the test oscilloscope for a vertical deflection factor of 5 volts/division, AC coupled and a sweep rate of 0.1 ms/division.

e. CHECK—Test oscilloscope display; it should consist of a step function waveform about +15 volts in amplitude. The wide part of the step function waveform should correspond to the duration of the sweep.

f. Disconnect the test oscilloscope/50 ohm coaxial cable/BNC to BSM adapter from the + GATE B front panel connector and connect it to the + GATE A front panel connector.

g. CHECK—Test oscilloscope display; it should consist of a step function waveform about +15 volts in amplitude. The wide part of the step function waveform should correspond to the duration of the sweep.

h. Disconnect the test oscilloscope/50 ohm coaxial cable/BNC to BSM adapter from the + GATE A front panel connector and connect it to the SWEEP A front panel connector.

i. CHECK—Test oscilloscope display; it should consist of a sawtooth waveform about +10 volts in amplitude. The width of the sawtooth waveform should correspond to the duration of the sweep.

j. Disconnect the test oscilloscope/50 ohm coaxial cable/BNC to BSM adapter from the SWEEP A front panel connector and connect it to the SWEEP B front panel connector.

k. CHECK—Test oscilloscope display; it should consist of a sawtooth waveform about +10 volts in amplitude. The width of the sawtooth waveform should correspond to the duration of the sweep.

l. Disconnect all test equipment.

This completes the performance check of the Type 11B2A. Disconnect all test equipment.

SECTION 6
CALIBRATION

Introduction

Complete calibration information for the Type 11B2A is given in this section. This procedure calibrates the instrument to the performance requirements listed in the Characteristics section. The Type 11B2A can be returned to original performance standards by completion of each step in this procedure. To merely touch up the calibration, perform only those steps entitled "Adjust . . .". A shortform calibration procedure is also provided in this section for the convenience of the experienced calibrator.

The Type 11B2A should be checked, and if necessary recalibrated, after each 1000 hours of operation, or every six months if used infrequently, to assure correct operation and accuracy. The Performance Check section of this manual provides a complete check of instrument performance without making internal adjustments. Use the performance check procedure to verify the calibration of the Type 11B2A and determine whether recalibration is required.

TEST EQUIPMENT REQUIRED

General

The following test equipment, or its equivalent, is required for complete calibration of the Type 11B2A (see Fig. 6-1). Specifications given are the minimum necessary for accurate calibration of this instrument. All test equipment is assumed to be correctly calibrated and operating within the given specifications. If equipment is substituted, it must meet or exceed the specifications of the recommended equipment.

1. DC voltmeter. Minimum sensitivity, 20,000 ohms/volt; accuracy, 3%; range, 0 to 30 volts. For example, Simpson Model 262.

2. Calibration oscilloscope. Tektronix Type 647A or R647A recommended.

3. Amplifier plug-in. Calibrated Tektronix 10-series Amplifier plug-in unit. The associated amplifier unit must have a bandwidth of at least DC to 100 MHz for the Type 11B2A internal triggering to be accurately checked.

4. Test oscilloscope. Bandwidth, DC to at least 10 MHz; minimum deflection factor, 0.2 volts/division. Tektronix Type 647A Oscilloscope with 10- and 11-series Plug-In Units, and Tektronix P6047 Probe recommended.

5. Medium frequency constant amplitude sine wave generator. Frequency, 50 kHz and 350 kHz to 100 MHz; output amplitude, less than 100 mV to above 4 volts; amplitude regulation accuracy, ±5%. Tektronix Type 191 Constant Amplitude Signal Generator recommended.

6. Low frequency sine-wave generator. Frequency 60 Hz to 50 kHz; output amplitude, less than 100 mV to above 500 mV; amplitude regulation accuracy, ±3%. For example, General Radio 1310-A Oscillator.

7. Time mark generator. Marker outputs 0.1 μs to 5 s; sine-wave outputs 10 ns, 20 ns and 50 ns; accuracy, 0.001%. Tektronix Type 184 Time-Mark Generator recommended.

8. Cable (two). Impedance, 50 ohm; length, 5 nanoseconds; connectors, GR. Tektronix Part No. 017-0502-00.

9. Cable (two). Impedance, 50 ohm; length, 42 inch; connectors, BNC. Tektronix Part No. 012-0057-00.

10. Adapter. Connectors, BNC female to alligator clips. Tektronix Part No. 013-0076-00.

11. Adapter (BNC T). Connectors, female BNC two ends, male BNC third end. Tektronix Part No. 103-0030-00.

12. Adapter (GR power divider Type 874 TPD). Connectors, GR all three ends. Tektronix Part No. 017-0082-00.

13. Adapter. Connectors, BNC female to BSM female. Tektronix Part No. 103-0036-00.

14. Termination (two). Impedance, 50 ohm; accuracy, ±3%; connectors, GR one end, BNC other end. Tektronix Part No. 017-0083-00.

15. Termination (two). Impedance, 50 ohm; accuracy, ±3%; connectors, BNC. Tektronix Part No. 011-0049-00.

16. Connector (Cinch #KPT-06F12-10P). Description; male 10 pin connector which mates with Type 647A J101. Tektronix Part No. 131-0300-00.

17. Capacitor. Description 47 pF, 10%. Tektronix Part No. 281-0519-00.

18. Adjustment tools:

Description	Tektronix Part No.
a. Insulated screwdriver, 1½-inch shaft, non-metallic	003-0000-00
b. Screwdriver, 3-inch shaft	003-0192-00
c. Hexagonal wrench, 1/16-inch	003-0089-00

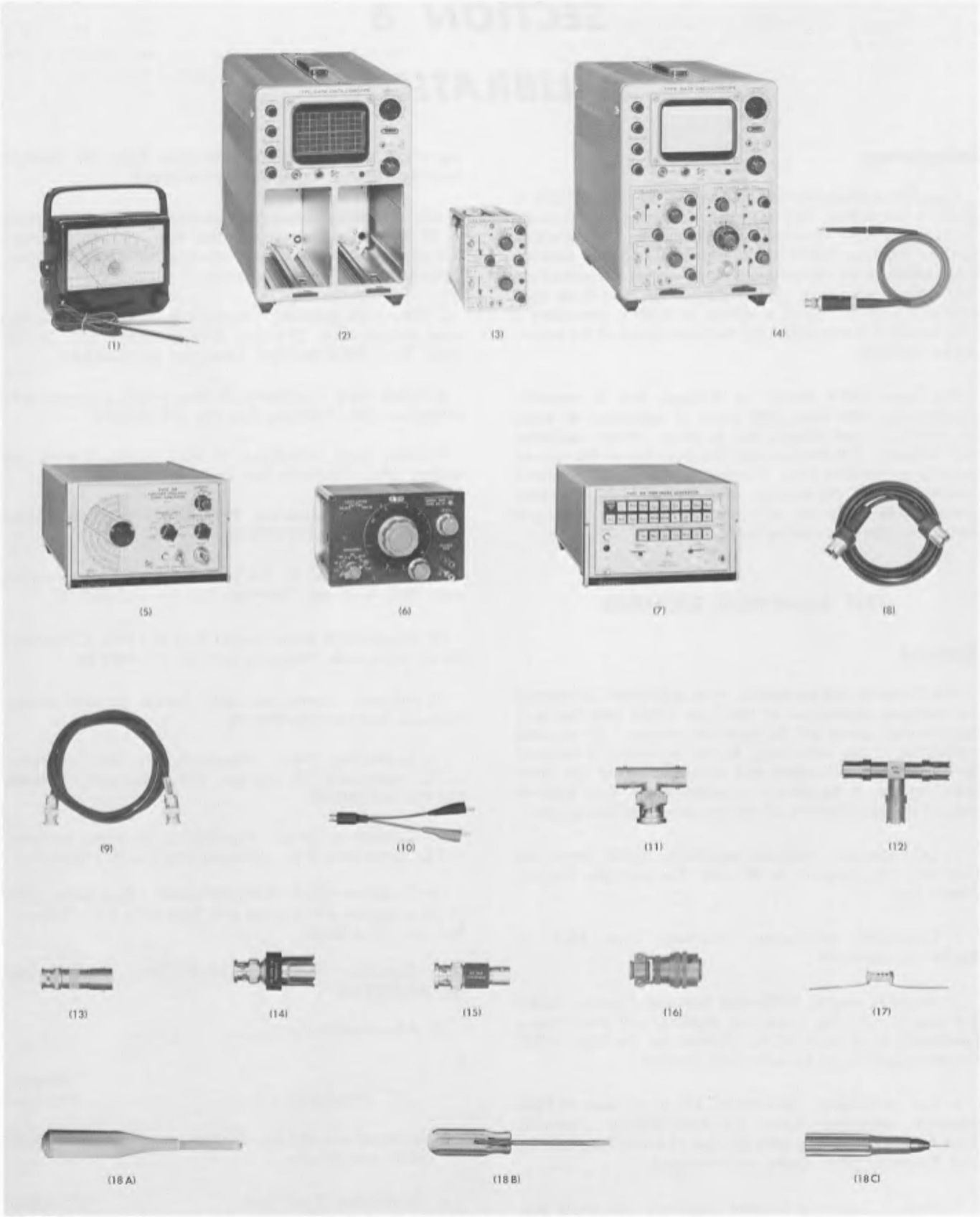

Fig. 6-1. Recommended calibration equipment.

CALIBRATION RECORD AND INDEX

This short-form calibration procedure is provided to aid in checking the operation of the Type 11B2A. It may be used as a calibration guide by the experienced calibrator, or it may be used as a record of calibration. Since the step numbers and titles used here correspond to those used in the complete procedure, this procedure also serves as an index to locate a step in the complete Calibration Procedure. Performance requirements correspond to those given in the Characteristics section.

Type 11B2A, Serial No. _____

Calibration Date _____

Calibration Technician _____

☐ 1. Adjust Internal Trigger DC Level, R7 (Page 6-9)

DC voltmeter reading of zero volts.

☐ 2. Check Trigger Preamplifier Gain and Overload Ability (Page 6-10)

Gain: One volt calibrator input signal will produce a signal amplitude between 1.2 and 1.6 volts at TP23.

Overload: Bottom of calibrator signal must be at least ±4 volts from ground reference point when signal starts compressing, and must appear stable during check.

☐ 3. Check Normal Triggering Mode (Page 6-10)

Should obtain a stable display by adjusting A TRIG LEVEL control.

☐ 4. Check Automatic Triggering Mode (Page 6-10)

Should obtain a stable display on the time marker leading edge when using 50 ms time markers, by adjusting A TRIG LEVEL control.

☐ 5. Check Free Run Triggering Mode (Page 6-10)

It should not be possible to obtain a stable display and sweep should run at all times.

☐ 6. Check A Trigger Level Mechanical Zero and Range (Page 6-10)

Zero: Dot on A TRIG LEVEL control opposite 0 when sweep runs as control is rotated from one extreme to its other extreme.

Range: With A SOURCE set to EXT and a 10 volt calibrator signal applied, the A TRIG LEVEL control should cause the display to free run when it is at either extreme of its rotation. With A SOURCE set to EXT÷10 and a 100 volt calibrator signal applied, the A TRIG LEVEL control should cause the display to free run when it is at either extreme of its rotation.

☐ 7. Check A Slope Switch Operation (Page 6-11)

A SLOPE switch set to +, beginning of sine wave display rising.

A SLOPE switch set to —, beginning of sine wave display falling.

☐ 8. Check A Sweep 50 kHz to 100 MHz External Triggering (Page 6-11)

Stable display with 125 mV or less of 50 kHz and 20 MHz sine wave signal and with 250 mV or less of 100 MHz sine wave signal by adjusting A TRIG LEVEL control. Display should be stable in either position of A SLOPE switch.

☐ 9. Check A Sweep 60 Hz to 50 kHz External Triggering (Page 6-12)

Stable display with 125 mV or less of 60 Hz and 50 kHz sine wave signal by adjusting A TRIG LEVEL control. Display should be stable in either position of A SLOPE switch.

☐ 10. Check A Sweep 50 kHz to 100 MHz Internal Triggering (Page 6-13)

Stable display with 3 mm or less vertical deflection of 50 kHz and 20 MHz sine wave signal and with 2 cm or less vertical deflection of 100 MHz sine wave signal, by adjusting A TRIG LEVEL control. Display should be stable in either position of A SLOPE switch.

☐ 11. Check A Sweep 60 Hz to 50 kHz Internal Triggering (Page 6-13)

Stable display with 3 mm or less vertical deflection of 60 Hz and 50 kHz sine wave signal by adjustin A TRIG LEVEL control. Display should be stable in either position of A SLOPE switch.

☐ 12. Check B Slope Switch Operation (Page 6-14)

B Slope switch set to +, beginning of sine wave display rising.

B SLOPE switch set to —, beginning of sine wave display falling.

☐ 13. Check B Sweep 50 kHz to 100 MHz External Triggering (Page 6-14)

Stable display with 200 mV or less of 50 kHz and 20 MHz sine wave signal and with 300 mV or less of 100 MHz sine wave signal by adjusting B TRIG LEVEL control. Display should be stable in either position of B SLOPE switch.

☐ 14. Check B Sweep 60 Hz to 50 kHz External Triggering (Page 6-15)

Stable display with 200 mV or less of 60 Hz and 50 kHz sine wave signal by adjusting B TRIG LEVEL control. Display should be stable in either position of B SLOPE switch.

☐ 15. Check B Sweep 50 kHz to 100 MHz Internal Triggering (Page 6-15)

Stable display with 5 mm or less vertical deflection of 50 kHz and 20 MHz sine wave signal and with 3 cm or less vertical deflection of 100 MHz sine wave signal by adjusting B TRIG LEVEL control. Display should be stable in either position of B SLOPE switch.

☐ 16. Check B Sweep 60 Hz to 50 kHz Internal Triggering (Page 6-16)

Stable display with 5 mm or less vertical deflection of 60 Hz and 50 kHz sine wave signal by adjusting A TRIG LEVEL control. Display should be stable in either position of A SLOPE switch.

☐ 17. Check B Trigger Level Mechanical Zero and Range (Page 6-16)

Zero: When B TRIG LEVEL control is centered between the two positions when the display just becomes triggered, the dot on the control should be opposite the 0.

Range: With B SOURCE set to EXT and a 20 volt calibrator signal applied, the sweep must not be triggered when the B TRIG LEVEL is at either extreme.

☐ 18. Check Single Sweep Triggering Mode (Page 6-18)

Reset light should be lit when sweep generator is armed and should be extinguished after the sweep has run. The display itself should run once and only once, except when a repetitive signal is connected to pin F of the Type 647A J101 connector, at which time it will run recurrently.

☐ 19. Adjust Delayed Sweep Start, R150, and A Sweep Calibration, R160W (Page 6-19)

With DELAY TIME MULT control set at 1.00, second time marker should be brightened; when marker is magnified it should start at the beginning of the sweep.

With DELAY TIME MULT control set at 1.00, second time marker should be brightened and when marker is magnified it should start at the beginning of the sweep.

☐ 20. Check Delay Time Multiplier Control Linearity (Page 6-19)

The DELAY TIME MULT control must be within 1.5 minor dial divisions of an even major dial setting, (for example 8.00), when each time marker between the second and tenth time markers are brightened and then magnified to the start of the sweep.

☐ 21. Adjust Normal, R331, and Magnifier Gain, R334 (Page 6-20)

Second and tenth time markers exactly lined up with the first and ninth graticule lines respectively. Time markers between second and tenth time markers within 1 mm of their respective graticule lines.

☐ 22. Adjust Magnifier Registration, R339 (Page 6-20)

Time marker aligned exactly with the center vertical graticule line in magnified sweep must remain within 1 mm of the vertical graticule line in unmagnified sweep.

☐ 23. Check A Sweep Length (Page 6-21)

Between 10.5 cm and 11 cm.

☐ 24. Adjust B Sweep Calibration, R260W (Page 6-21)

Second and tenth time markers should be exactly lined up with the first and ninth graticule lines respectively.

☐ 25. Check B Sweep Length (Page 6-21)

Between 10.2 cm and 11 cm.

☐ 26. Check A and B Variable Time/Cm Controls and Uncal Light (Page 6-21)

Attenuation ratio for each control must be at least 2.5:1, and UNCAL light must be lit when either control is away from its CALIB position.

☐ 27. Adjust A Sweep One Microsecond Sweep Rate, C160C (Page 6-21)

Should be one time marker per centimeter (within 1 mm) between the first and ninth graticule lines. Using DELAY TIME MULT control, the dial reading needed to set the tenth time marker to the start of the magnified sweep must be exactly 8.00 major dial divisions above the dial reading needed to set the second time marker to the start of the magnified sweep.

☐ 28. Check A Sweep 2 Microsecond To 5 Second Sweep Rates (Page 6-22)

Use delayed sweep to check the following Sweep Rates.

NOTES

A TIME/CM Switch Setting	B TIME/CM Switch Setting	Time Markers Applied From Time Mark Generator	Alignment Time Marker	Check Time Marker	Maximum Type 11B2A DELAY TIME MULT Control Error
2 μSEC	.1 μSEC	1 μs	3rd	19th	±0.03
5 μSEC	.5 μSEC	5 μs	2nd	10th	±0.03
10 μSEC	1 μSEC	10 μs	2nd	10th	±0.03
20 μSEC	1 μSEC	10 μs	3rd	19th	±0.03
50 μSEC	5 μSEC	50 μs	2nd	10th	±0.03
.1 mSEC	10 μSEC	.1 ms	2nd	10th	±0.03
.2 mSEC	10 μSEC	.1 ms	3rd	19th	±0.03
.5 mSEC	50 μSEC	.5 ms	2nd	10th	±0.03
1 mSEC	.1 mSEC	1 ms	2nd	10th	±0.03
2 mSEC	.1 mSEC	1 ms	3rd	19th	±0.03
5 mSEC	.5 mSEC	5 ms	2nd	10th	±0.03
10 mSEC	1 mSEC	10 ms	2nd	10th	±0.03
20 mSEC	1 mSEC	10 ms	3rd	19th	±0.03
50 mSEC	5 mSEC	50 ms	2nd	10th	±0.03
.1 SEC[1]	10 mSEC	.1 s	2nd	10th	±0.08
.2 SEC	10 mSEC	.1 s	3rd	19th	±0.08
.5 SEC	50 mSEC	.5 s	2nd	10th	±0.08
1 SEC	.1 SEC	1 s	2nd	10th	±0.08
2 SEC	.1 SEC	2 s	3rd	19th	±0.08
5 SEC	.5 SEC	5 s	2nd	10th	±0.08

[1]**Set the Type 11B2A TRIG MODE switch to NORM, the HORIZ DISPLAY switch to A INTEN BY B and adjust the A TRIG LEVEL for a stable display, then proceed with part a of this step for each of the remaining Type 11B2A A TIME/CM switch settings in Table 6-1.**

☐ 29. Adjust and Check A Sweep .1 Microsecond to .5 Microsecond Sweep Rates (Page 6-23)

A TIME/CM Switch Setting	Time Markers Applied From Time Mark Generator	Alignment Time Marker	Check Time Marker	Adjustment or Check Tolerance
.1 μSEC	.1 μs	2nd	10th	C160A
.2 μSEC	.1 μs	3rd	19th	±1 mm
.5 μSEC	1 μs	1st	5th	±1 mm

☐ 30. Adjust and Check B Sweep .1 Microsecond To .5 Microsecond Sweep Rates (Page 6-23)

A TIME/CM Switch Setting	B TIME/CM Switch Setting	Time Markers Applied From Time Mark Generator	Alignment Time Marker	Check Time Marker	Adjustment or Check Tolerance
1 μSEC	.1 μSEC	.1 μs	2nd	10th	C260A
1 μSEC	.2 μSEC	.1 μs	3rd	19th	±1 mm
1 μSEC	.5 μSEC	1 μs	1st	5th	±1 mm
10 μSEC	1 μSEC	1 μs	2nd	10th	C260C
10 μSEC	2 μSEC	1 μs	3rd	19th	±1 mm
10 μSEC	5 μSEC	5 μs	2nd	10th	±1 mm

☐ 31. Check Ten Times Magnifier Accuracy (Page 6-24)
A and B TIME/CM switch position, of 0.1 μSEC to 0.2 μSEC/DIV, within 3.5% with MAG switch set to ×10; .5 μSEC to 50 mSEC, within 2.5% with MAG switch set to ×10; .1 SEC to 5 SEC, within 4% with MAG switch set to ×10. Magnifier light must be on.

☐ 32. Check B Sweep 10 Microsecond to 5 Second Sweep Rates (Page 6-25)

B TIME/CM Switch Setting	A TIME/CM Switch Setting	Time Markers Applied From Time Mark Generator	Alignment Time Marker	Check Time Marker	Maximum Display Error
10 μSEC	10 μSEC	10 μs	1st	9th	1 mm
20 μSEC	20 μSEC	10 μs	3rd	19th	1 mm
50 μSEC	50 μSEC	50 μs	1st	9th	1 mm
.1 mSEC	.1 mSEC	.1 ms	1st	9th	1 mm
.2 mSEC	.2 mSEC	.1 ms	3rd	19th	1 mm
.5 mSEC	.5 mSEC	.5 ms	1st	9th	1 mm
1 mSEC	1 mSEC	1 ms	1st	9th	1 mm
2 mSEC	2 mSEC	1 ms	3rd	19th	1 mm
5 mSEC	5 mSEC	5 ms	1st	9th	1 mm
10 mSEC	10 mSEC	10 ms	1st	9th	1 mm
20 mSEC	20 mSEC	10 ms	3rd	19th	1 mm
50 mSEC	50 mSEC	50 ms	1st	9th	1 mm
.1 SEC	.1 SEC	.1 s	1st	9th	2 mm
.2 SEC	.2 SEC	.1 s	3rd	19th	2 mm
.5 SEC	.5 SEC	.5 s	1st	9th	2 mm
1 SEC	1 SEC	1 s	1st	9th	2 mm
2 SEC	2 SEC	1 s	3rd	19th	2 mm
5 SEC	5 SEC	5 s	1st	9th	2 mm

NOTES

☐ 33. Check B Sweep Delay Time Jitter (Page 6-25)

Less than 3 mm of jitter on the leading edge of the ×1000 magnified time marker.

☐ 34. Check Alternate Trace Synchronization Pulse (Page 6-27)

Synchronization pulse must be at least 4 volts in amplitude.

☐ 35. Check External Horizontal Deflection Sensitivity and Frequency Response (Page 6-28)

Sensitivity: A 5 volt calibrator signal must cause a horizontal deflection between 4.5 cm and 5.5 cm when unmagnified.

A 0.5 volt calibrator signal must cause a horizontal deflection between 4.5 cm and 5.5 cm when the MAG switch is set to ×10.

Response: DC to not more than −3 dB at 3 MHz.

☐ 36. Check Front-panel Output Waveforms (Page 6-28)

+ GATE B approximately +15 volts in amplitude.

+ GATE A approximately +15 volts in amplitude.

SWEEP A approximately +10 volts in amplitude.

SWEEP B approximately +10 volts in amplitude.

The wide part of the step function waveform (gate) and the width of the sawtooth waveform should correspond to the duration of the sweep.

NOTES

CALIBRATION PROCEDURE

General

The following procedure is arranged in a sequence which allows the Type 11B2A to be calibrated with the least interaction of adjustments and reconnection of equipment.

However, some adjustments affect the calibration of other circuits within the instrument. In this case, it will be necessary to check the operation of other parts of the instrument. When a step interacts with others, the steps which need to be checked are noted under "INTERACTION- . . ."

Any needed maintenance should be performed before proceeding with calibration. Troubles which become apparent during calibration should be corrected using the techniques given in the Maintenance section.

The steps titled "Adjust . . . ◐" in the following procedure provide a check of instrument performance, whenever possible, before the adjustment is made. The symbol ◐ is used to identify the steps in which an adjustment is made. To prevent recalibration of other circuits when performing a partial calibration, readjust only if the listed tolerances is not met. However, when performing a complete calibration, best overall performance will be provided if each adjustment is made to the exact setting, even if the "CHECK- . . ." is within the allowable tolerance.

In the following procedure, a test equipment setup picture is shown for each major group of adjustments and checks. Following each setup picture is a complete list of front-panel control settings for the Type 11B2A, 647A and 10-Series plug-in. To aid in locating individual controls which have been changed during complete calibration, these control names are printed in bold type. If only a partial calibration is preformed, start with the nearest setup preceding the desired portion. Type 11B2A front-panel control titles referred to in this procedure are capitalized (e.g., TRIG MODE). Internal adjustment titles are initial capitalized only (e.g., Mag Gain).

The following procedure uses the equipment listed under Equipment Required. If equipment is substituted, control settings or test equipment setup may need to be altered to meet the requirements of the equipment used.

NOTE

All waveforms shown in this procedure are actual waveform photographs taken with a Tektronix Oscilloscope Camera System.

Preliminary Procedure

1. Remove the right side cover from the Type 647A.

2. Install the Type 11B2A into the horizontal plug-in compartment of the Type 647A.

3. Install 10-series plug-in into the vertical plug-in compartment of the Type 647A.

4. Set the front-panel controls of the Type 11B2A, 10-series plug-in and 647A as described below.

5. Connect the Type 647A directly to a power supply of appropriate voltage.

6. Set the Type 647A POWER switch to ON. Allow at least 20 minutes warm up at 25°C, ±5°C, for checking the instrument to the given accuracy.

NOTES

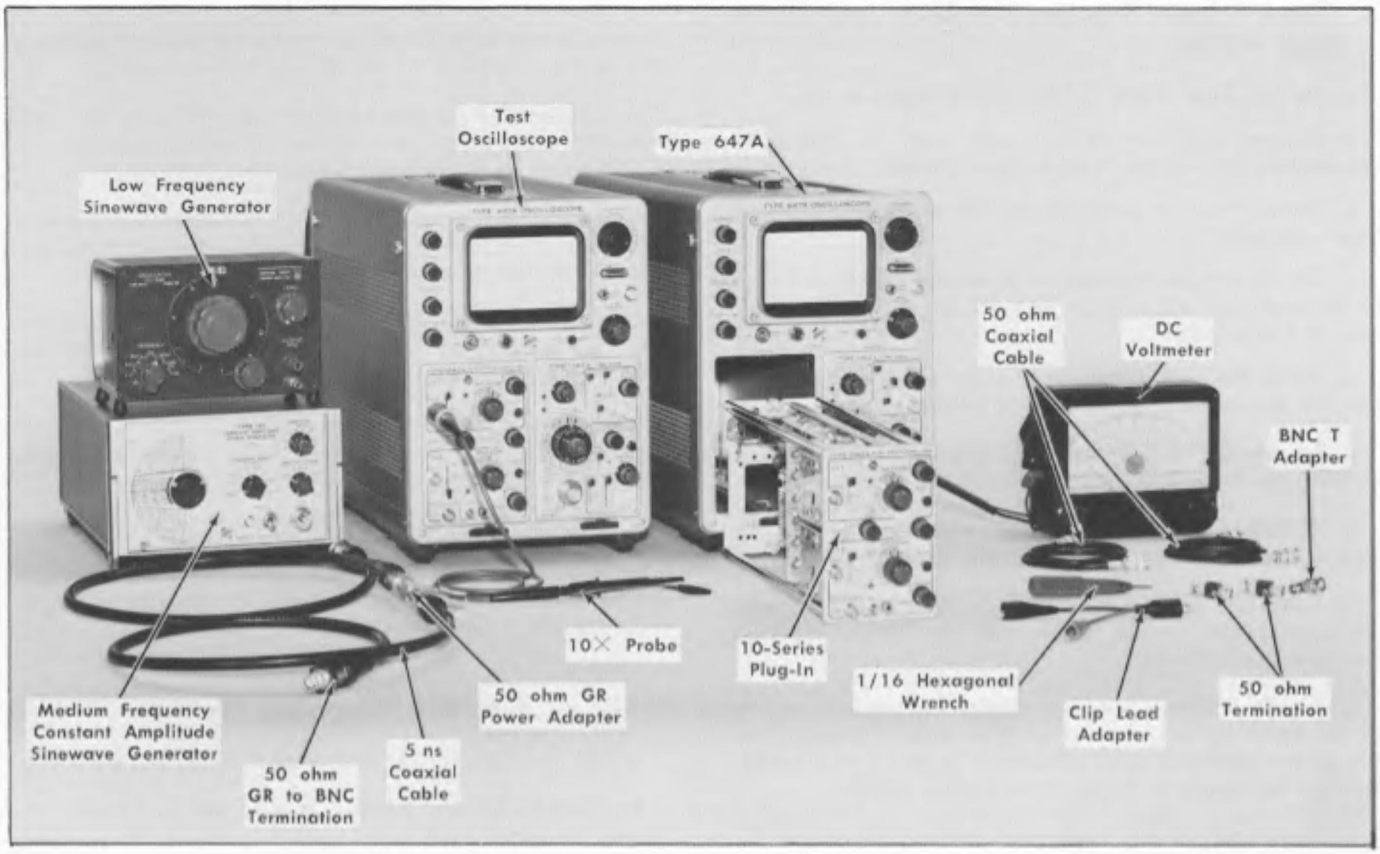

Fig. 6-2. Initial test equipment setup for steps 1 through 17.

Type 11B2A

TRIG MODE	AUTO
A SLOPE	+
A TRIG LEVEL	Midrange
A HF STABILITY	Midrange
A COUPLING	AC
A SOURCE	INT
B COUPLING	AC
B SOURCE	INT
B TRIG LEVEL	Midrange
B SLOPE	+
HORIZ DISPLAY	A
MAG	OFF
A TIME/CM	1 mSEC
B TIME/CM	1 mSEC
A VARIABLE (A TIME/CM)	CALIB
B VARIABLE (B TIME/CM)	CALIB
DELAY TIME MULT	1.00

10-Series

Volts/Cm	.5
Variable (Volts/Cm)	Cal
Position	Midrange
Input Coupling	AC
Invert	Pushed in
Trigger	Norm
Mode	Ch 1

Type 647A

Intensity	Usable display brightness
Focus	Well defined display
Astigmatism	Well defined display
Scale Illum	As desired
Calibrator	1 V
Position	Midrange
Fine (Position)	Midrange

1. Adjust Internal Trigger DC Level

a. Test equipment setup is shown in Fig. 6-2.

b. Connect a DC voltmeter between ground and TP23, see Fig. 6-3 (test point on emitter of Q23B).

c. Remove the 10-series plug-in from the vertical plug-in compartment of the Type 647A.

d. CHECK—Voltmeter reading; if voltmeter reads zero volt, no adjustment of the Int Trig DC Level control, R7, is necessary.

e. ADJUST—Int Trig DC Level control, R7 (see Fig. 6-3) for a voltmeter reading of zero volt.

f. Re-install the 10-series plug-in into the vertical plug-in compartment of the Type 647A.

g. Disconnect the DC voltmeter.

2. Check Trigger Preamplifier Gain and Overload Ability

a. Set the Type 11B2A A COUPLING switch to DC.

b. Connect a 50 ohm coaxial cable from the Type 647A cal out connector to the 10-series input connector being used.

c. Connect a 10× probe to the test oscilloscope vertical input connector.

d. Set the test oscilloscope for a vertical deflection factor (at the probe tip) of 2 volts/division, DC coupled and a sweep rate of 1 ms/division.

e. Touch the 10× probe tip to a ground point and position the test oscilloscope trace to a ground reference point.

f. Remove the 10× probe tip from ground and connect it to TP23; see Fig. 6-3 (test point on emitter of Q23B).

g. CHECK—Display amplitude; square-wave display should be from 1.2 volts to 1.6 volts in amplitude.

h. Rotate the position control of the 10-series plug-in until the square-wave display on the test oscilloscope starts to decrease in amplitude.

i. CHECK—Voltage level and display appearance; bottom of the square-wave display must be at least ±4 volts from the ground reference point established in part e of this step, and the square-wave display must appear stable.

j. Disconnect all test equipment and re-position the 10-series position control to midrange.

3. Check Normal Triggering Mode

a. Set the Type 11B2A TRIG MODE switch to NORM, A COUPLING switch to AC and note that no display is present.

b. Set the Type 11B2A A SOURCE switch to LINE.

c. Connect a 10× probe from the 10-series input connector being used to sine-wave signal source of power-line frequency (such as pin 30, approximately 6.3 volts AC, of the horizontal inter-connecting plug in the Type 647A.)

d. Set the Type 11B2A A TIME/CM switch to 5 mSEC.

e. Set the 10-series volts/cm switch for a display about 3 cm high.

f. CHECK—Display stability; stable display must be obtained by adjusting the A TRIG LEVEL control.

g. Disconnect the 10× probe.

4. Check Automatic Triggering Mode

a. Set the Type 11B2A TRIG MODE switch to AUTO, A SOURCE switch to INT and A TIME/CM switch to 1 mSEC. Note that a trace is displayed.

b. To the output connector of a low frequency sine wave generator connect the alligator clip leads of a clip lead adapter (black clip lead to ground, red clip lead to signal output connector).

c. Connect a 50 ohm coaxial cable to the BNC connector of the clip lead adapter, then connect a 50 ohm BNC termination to the other end of the 50 ohm coaxial cable.

d. Connect the 50 ohm coaxial cable/50 ohm BNC termination combination from the low frequency generator to the 10-series input connector being used.

e. Adjust the frequency and amplitude controls on the low frequency generator to produce a 1 kHz sine-wave display about 3 cm high on the Type 647A CRT.

f. CHECK—Display stability; a consistent triggering point on the sine-wave and stable display must be obtained by adjusting the A TRIG LEVEL control.

g. Adjust the frequency and amplitude controls on the low frequency generator to produce a 10 Hz sine wave display about 3 cm high on the Type 647A CRT.

h. Set the Type 11B2A A TIME/CM switch to 20 mSEC.

i. CHECK—Display stability; it must not be possible to obtain a consistent triggering point on the sine-wave by adjusting the A TRIG LEVEL control.

5. Check Free Run Triggering Mode

a. Set the Type 11B2A TRIG MODE switch to FREE RUN.

b. CHECK—Display stability; it must not be possible to obtain a stable display by adjusting the A TRIG LEVEL control.

c. Disconnect all test equipment. Note that a trace is still displayed.

6. Check A Trigger Level Mechanical Zero and Range

a. Set the Type 11B2A TRIG MODE switch to NORM, A COUPLING switch to DC, the A SOURCE switch to EXT. and the A TIME/CM switch to 1 mSEC.

b. Rotate the TRIG LEVEL control slowly from one extreme to the other extreme, noting the position of the control when the sweep runs once across the CRT.

c. CHECK—TRIG LEVEL control position; the dot on the TRIG LEVEL control should be opposite the 0 as the sweep runs. If it is not, loosen the knob set screw with a $^1/_{16}$ hexagonal wrench and reposition the knob so the dot is opposite the 0.

d. Set the Type 11B2A TRIG MODE switch to AUTO and the A COUPLING switch to AC.

e. Connect a BNC T adapter to the Type 647A cal out connector, then connect a 50 ohm coaxial cable from the BNC T adapter to the 10-series input connector for which the mode switch has been set. Connect another 50 ohm coaxial cable from the other end of the BNC T adapter to the Type 11B2A A TRIG IN connector.

f. Set the Type 647A calibrator switch for an output square-wave amplitude of 10 volts.

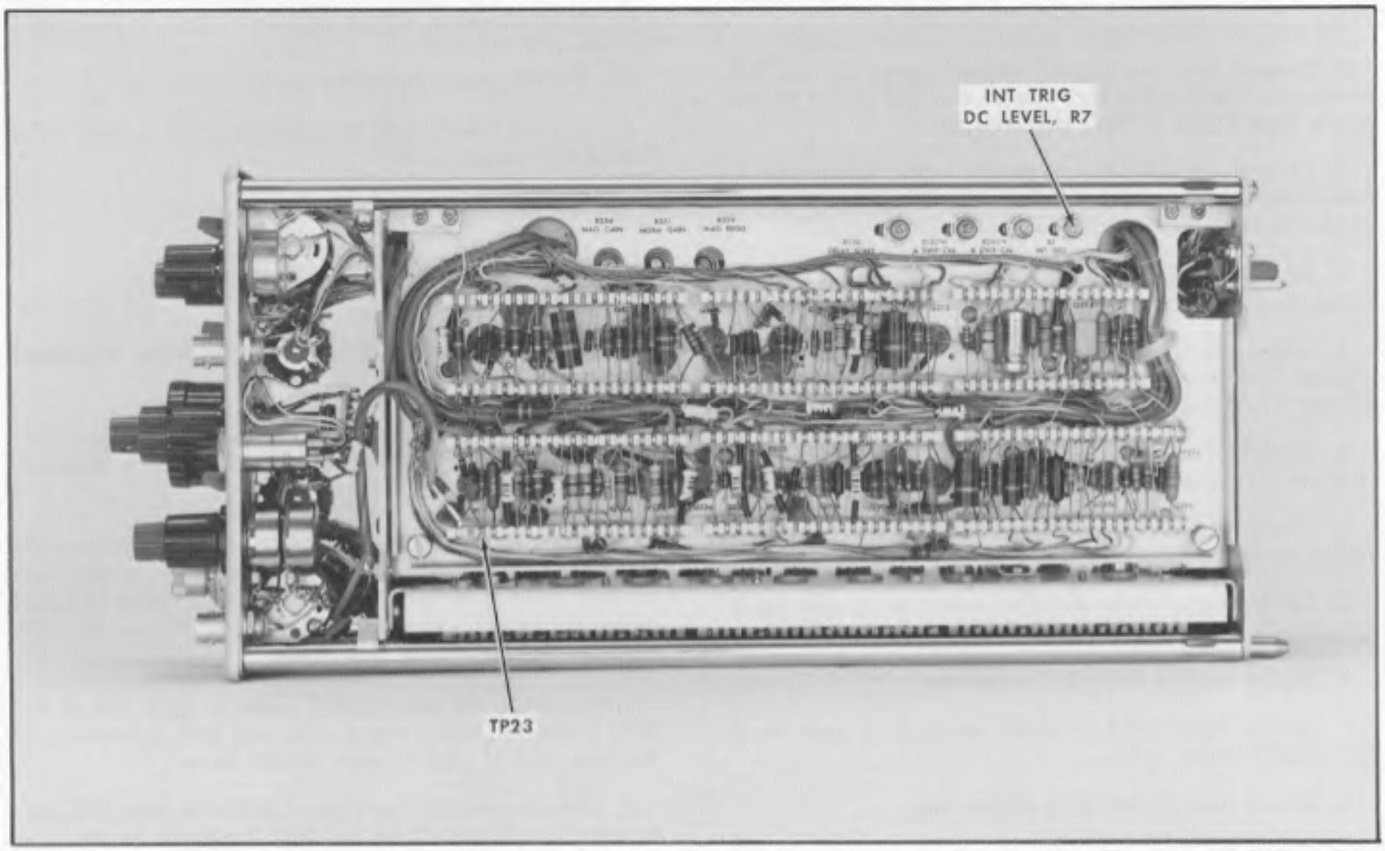

Fig. 6-3. Location of Int Trig DC Level, R7 and test point TP23.

g. Adjust the 10-series volts/cm switch to obtain a display 2 cm high on the Type 647A CRT.

h. Rotate the A TRIG LEVEL control slowly from one extreme to the other extreme.

i. CHECK—Display stability; display must free run when the A TRIG LEVEL control is at either extreme.

j. Set the Type 11B2A A SOURCE switch to EXT ÷ 10.

k. Set the Type 647A calibrator switch for an output square-wave amplitude of 100 volts.

l. Adjust the 10-series volts/cm switch to obtain a display 5 cm high on the Type 647A CRT.

m. Rotate the A TRIG LEVEL control slowly from one extreme to the other extreme.

n. CHECK—Display stability; display must free run when the A TRIG LEVEL control is at either extreme.

o. Disconnect all test equipment, and turn the Type 647A calibrator to off.

7. Check A Slope Switch Operation

a. Set the Type 11B2A A SOURCE switch to LINE.

b. Connect a 10× probe from the 10-series input connector being used to a sine-wave signal source of power line frequency (such as pin 30, approximately 6.3 volts AC, of the horizontal inter-connecting plug in the Type 647A).

c. Set the 10-series volts/cm switch for a CRT display about 2 cm high.

d. CHECK—Display polarity against the Type 11B2A A SLOPE switch polarity; the beginning of the sine-wave display should be rising.

e. Set the Type 11B2A A SLOPE switch to —.

f. CHECK—Display polarity against the Type 11B2A A SLOPE switch polarity; the beginning of the sine-wave display should be falling.

g. Set the Type 11B2A TRIG MODE switch to NORM and the A SLOPE switch to +.

h. Repeat part d through f of this step.

i. Disconnect the 10× probe.

8. Check A Sweep 50 kHz to 100 MHz External Triggering

a. Set the Type 11B2A A SLOPE switch to +, A SOURCE switch to EXT and the A TIME/CM switch to 20 μSEC.

b. Connect a 50 ohm GR power divider adapter to the output connector of the medium frequency constant amplitude sine-wave generator.

c. Connect a 5 ns coaxial cable to each end of the 50 ohm GR power divider adapter, then connect a 50 ohm GR

to BNC termination to the other end of each 5 ns coaxial cable.

d. Connect one 5 ns coaxial cable/50 ohm GR to BNC termination combination from the 50 ohm GR power divider to the Type 11B2A A TRIG IN connector.

e. Connect the second 5 ns coaxial cable/50 ohm GR to BNC termination combination from the 50 ohm GR power divider to the 10-series input connector being used.

f. Set the 10-series volts/cm switch to .05 on the channel being used.

g. Adjust the frequency and amplitude controls on the medium frequency generator to produce a 50 kHz sine-wave display 2.5 cm high on the Type 647A CRT.

h. CHECK—Display stability; a stable display must be obtained by adjusting the Type 11B2A A TRIG LEVEL control.

i. Change the Type 11B2A A SLOPE switch to — and repeat part h.

j. Set the Type 11B2A A SLOPE switch to + and the A COUPLING switch to AC LF REJ.

k. Repeat parts g through i of this step.

l. Set the Type 11B2A A SLOPE switch to + and the A COUPLING switch to DC.

m. Repeat parts g through i of this step.

n. Adjust the frequency and amplitude controls on the medium frequency generator to produce a 20 MHz sine-wave display 2.5 cm high on the Type 647A CRT.

o. Set the Type 11B2A A SLOPE switch to +, A COUPLING switch to AC, the MAG switch to ×10, and the A TIME/CM switch to .5 μSEC.

p. CHECK—Display stability; a stable display must be obtained by adjusting the Type 11B2A A TRIG LEVEL control.

q. Change the Type 11B2A A SLOPE switch to — and repeat part p.

r. Set the Type 11B2A A SLOPE switch to + and the A COUPLING switch to AC LF REJ.

s. Repeat parts n through q of this step.

t. Set the Type 11B2A A SLOPE switch to + and the A COUPLING switch to DC.

u. Repeat parts n through q of this step.

v. Adjust the frequency and amplitude controls on the medium frequency generator to produce a 100 MHz sine-wave display 5 cm high on the Type 647A CRT.

w. Set the Type 11B2A A SLOPE switch to +, A COUPLING switch to AC, the MAG switch to ×10, and the A TIME/CM switch to .1 μSEC.

x. CHECK—Display stability; a stable display having less than 1 mm of jitter must be obtained by adjusting the Type 11B2A A TRIG LEVEL and A HF STABILITY controls.

y. Change the Type 11B2A A SLOPE switch to — and repeat part x.

z. Set the Type 11B2A A SLOPE switch to + and the A COUPLING switch to AC LF REJ.

aa. Repeat parts v through y of this step.

ab. Set the Type 11B2A A SLOPE switch to + and the A COUPLING switch to DC.

ac. Repeat parts v through y of this step.

ad. Disconnect all test equipment.

9. Check A Sweep 60 Hz to 50 kHz External Triggering

a. Set the Type 11B2A A SLOPE switch to +, A COUPLING switch to AC, MAG switch to OFF and the A TIME/CM switch to 5 mSEC.

b. To the output connector of a low frequency sine-wave generator, connect the alligator clip leads of a clip lead adapter (black clip lead to ground, red clip lead to signal output connector). To the BNC connector of the clip lead adapter, connect a BNC T adapter.

c. Connect a 50 ohm coaxial cable to each end of the BNC T adapter, then connect a 50 ohm BNC termination to the other end of each 50 ohm coaxial cable.

d. Connect one 50 ohm coaxial cable/50 ohm BNC termination combination from the BNC T adapter to the Type 11B2A A TRIG IN connector.

e. Connect the second 50 ohm coaxial cable/50 ohm BNC termination combination from the BNC T adapter to the 10-series input connector being used.

f. Set the 10-series volts/cm switch to .05 on the channel being used.

g. Adjust the frequency and amplitude controls on the low frequency generator to produce a 60 Hz sine-wave display 2.5 cm high on the Type 647A CRT.

h. CHECK—Display stability; a stable display must be obtained by adjusting the Type 11B2A A TRIG LEVEL control.

i. Change the Type 11B2A A SLOPE switch to — and repeat part h.

j. Set the Type 11B2A A SLOPE switch to + and the A COUPLING switch to DC.

k. Repeat parts g through i of this step.

l. Adjust the frequency and amplitude controls on the low frequency generator to produce a 50 kHz sine-wave display 2.5 cm high on the Type 647A CRT.

m. Set the Type 11B2A A SLOPE switch to +, A COUPLING switch to AC, and the A TIME/CM switch to 20 μSEC.

n. CHECK—Display stability; a stable display must be obtained by adjusting the Type 11B2A A TRIG LEVEL control.

o. Change the Type 11B2A A SLOPE switch to — and repeat part n.

p. Set the Type 11B2A A SLOPE switch to + and the A COUPLING switch to DC.

q. Repeat parts l through o of this step.

r. Disconnect all test equipment.

10. Check A Sweep 50 kHz to 100 MHz Internal Triggering

a. Set the Type 11B2A A SLOPE switch to +, A COUPLING switch to AC and the A SOURCE to INT.

b. To the output connector of the medium frequency constant amplitude sine-wave generator, connect a 5 ns coaxial cable; then connect a 50 ohm GR to BNC termination to the other end of the 5 ns coaxial cable.

c. Connect the 5 ns coaxial cable/50 ohm GR to BNC termination combination from the medium frequency generator to the 10-series input connector being used.

d. Set the 10-series volts/cm switch to 2 on the channel being used.

e. Adjust the frequency and amplitude controls on the medium frequency generator to produce a 50 kHz sine wave display 3 mm high on the Type 647A CRT.

f. CHECK—Display stability; a stable display must be obtained by adjusting the Type 11B2A A TRIG LEVEL control.

g. Change the Type 11B2A A SLOPE switch to — and repeat part f.

h. Set the Type 11B2A A SLOPE switch to + and the A COUPLING switch to AC LF REJ.

i. Repeat parts e through g of this step.

j. Set the Type 11B2A A SLOPE switch to + and the A COUPLING switch to DC.

k. Repeat parts e through g of this step.

l. Adjust the frequency and amplitude controls on the medium frequency generator to produce a 20 MHz sine-wave display 3 mm high on the Type 647A CRT.

m. Set the Type 11B2A A SLOPE switch to +, A COUPLING switch to AC, the MAG switch to ×10, and the A TIME/CM switch to .5 μSEC.

n. CHECK—Display stability; a stable display must be obtained by adjusting the Type 11B2A A TRIG LEVEL control.

o. Change the Type 11B2A A SLOPE switch to — and repeat part n.

p. Set the Type 11B2A SLOPE switch to + and the A COUPLING switch to AC LF REJ.

q. Repeat parts 1 through o of this step.

r. Set the Type 11B2A A SLOPE switch to + and the A COUPLING switch to DC.

s. Repeat parts l through o of this step.

t. Adjust the frequency and amplitude controls on the medium frequency generator to produce a 100 MHz sine-wave display 2 cm high on the Type 647A CRT.

u. Set the Type 11B2A A SLOPE switch to +, A COUPLING switch to AC, the MAG switch to ×10, and the A TIME/CM switch to .1 μSEC.

v. CHECK—Display stability; a stable display having less than 1 mm of jitter must be obtained by adjusting the Type 11B2A A TRIG LEVEL and A HF STABILITY controls.

w. Change the Type 11B2A A SLOPE switch to — and repeat part v.

x. Set the Type 11B2A A SLOPE switch to + and the A COUPLING switch to AC LF REJ.

y. Repeat parts t through w of this step.

z. Set the Type 11B2A A SLOPE switch to + and the A COUPLING switch to DC.

aa. Repeat parts t through w of this step.

ab. Disconnect all test equipment.

11. Check A Sweep 60 Hz to 50 kHz Internal Triggering

a. Set the Type 11B2A A SLOPE switch to +, A COUPLING switch to AC, MAG switch to OFF and the A TIME/CM switch to 5 mSEC.

b. To the output connector of a low frequency sine-wave generator, connect the alligator clip leads of a clip lead adapter (black clip lead to ground, red clip lead to signal output connector).

c. Connect a 50 ohm coaxial cable to the BNC connector of the clip lead adapter; then, connect a 50 ohm BNC termination to the other end of the 50 ohm coaxial cable.

d. Connect the 50 ohm coaxial cable/50 ohm BNC termination combination from the low frequency generator to the 10-series input connector being used.

e. Set the 10-series volts/cm switch to 2 on the channel being used.

f. Adjust the frequency and amplitude controls on the low frequency generator to produce a 50 kHz sine-wave display 3 mm high on the Type 647A CRT.

g. CHECK—Display stability; a stable display must be obtained by adjusting the Type 11B2A A TRIG LEVEL control.

h. Change the Type 11B2A A SLOPE switch to — and repeat part g.

i. Set the Type 11B2A A SLOPE switch to + and the A COUPLING switch to DC.

j. Repeat parts f through h of this step.

k. Adjust the frequency and amplitude controls on the low frequency generator to produce a 60 Hz sine-wave display 3 mm high on the Type 647A CRT.

l. Set the Type 11B2A A SLOPE switch to +, A COUPLING switch to AC, and the A TIME/CM switch to 20 μSEC.

m. CHECK—Display stability; a stable display must be obtained by adjusting the Type 11B2A A TRIG LEVEL control.

n. Change the Type 11B2A A SLOPE switch to — and repeat part m.

o. Set the Type 11B2A A SLOPE switch to + and the A COUPLING switch to DC.

p. Repeat parts k through n of this step.

q. Disconnect all test equipment.

12. Check B Slope Switch Operation

a. Reset the following Type 11B2A controls.

A SLOPE	+
A COUPLING	AC
A TIME/CM	1 mSEC
B TIME/CM	1 mSEC

b. Connect a 10× probe from the 10-series input connector being used to a sine-wave signal source of power line frequency (such as pin 30, approximately 6.3 volts AC, of the horizontal inter-connecting plug in the Type 647A).

c. Set the 10-series volts/cm switch for a CRT display about 3 cm high.

d. Adjust the Type 11B2A A TRIG LEVEL control to obtain a stable display, then set the HORIZ DISPLAY switch to B DLY'D BY A (triggered) and adjust the B TRIG LEVEL control to obtain a stable display.

e. CHECK—Display polarity against the Type 11B2A B SLOPE switch polarity; the beginning of the sine-wave display should be rising.

f. Set the Type 11B2A B SLOPE switch to —.

g. CHECK—Display polarity against the Type 11B2A B SLOPE switch polarity; the beginning of the sine-wave display should be falling.

h. Set the Type 11B2A TRIG MODE switch to AUTO and the B SLOPE switch to +.

i. Repeat parts e through g of this step.

j. Disconnect the 10× probe.

13. Check B Sweep 50 kHz to 100 MHz External Triggering

a. Reset the following Type 11B2A controls.

TRIG MODE	NORM
B SOURCE	EXT
B SLOPE	+
HORIZONTAL DISPLAY	A
A TIME/CM	20 μSEC
B TIME/CM	20 μSEC

b. To the output connector of a medium frequency constant amplitude sine-wave generator, connect a 50 ohm GR power divider adapter.

c. Connect a 5 ns coaxial cable to each end of the 50 ohm GR power divider adapter, then connect a 50 ohm GR to BNC termination to the other end of each 5 ns coaxial cable.

d. Connect one 5 ns coaxial cable/50 ohm GR to BNC termination combination from the 50 ohm GR power divider to the Type 11B2A B TRIG IN connector.

e. Connect the second 5 ns coaxial cable/50 ohm GR to BNC termination combination from the 50 ohm GR power divider to the 10-series input connector being used.

f. Set the 10-series volts/cm switch to .05 on the channel being used.

g. Adjust the frequency and amplitude controls on the medium frequency generator to produce a 50 kHz sine-wave display 4 cm high on the Type 647A CRT.

h. Adjust the Type 11B2A A TRIG LEVEL control to obtain a stable display, then set the HORIZ DISPLAY switch to B DLY'D BY A (triggered).

i. CHECK—Display stability; a stable display must be obtained by adjusting the Type 11B2A B TRIG LEVEL control.

j. Change the Type 11B2A B SLOPE switch to — and repeat part i.

k. Set the Type 11B2A B COUPLING switch to DC and the B SLOPE switch to +.

l. Repeat parts g through j of this step.

m. Set the Type 11B2A HORIZ DISPLAY switch to A.

n. Adjust the frequency and amplitude controls on the medium frequency generator to produce a 20 MHz sine-wave display 4 cm high on the Type 647A CRT.

o. Set the Type 11B2A B COUPLING switch to AC, B SLOPE switch to +, the MAG switch to ×10, the A TIME/CM switch to .5 μSEC and the B TIME/CM switch to .5 μSEC.

p. Adjust the Type 11B2A A TRIG LEVEL control to obtain a stable display, then set the HORIZ DISPLAY switch to B DLY'D BY A (triggered).

q. CHECK—Display stability; a stable display must be obtained by adjusting the Type 11B2A B TRIG LEVEL control.

r. Change the Type 11B2A B SLOPE switch to — and repeat part q.

s. Set the Type 11B2A B COUPLING switch to DC and the B SLOPE switch to +.

t. Repeat parts n through r of this step.

u. Set the Type 11B2A HORIZ DISPLAY switch to A.

v. Adjust the frequency and amplitude controls on the medium frequency generator to produce a 100 MHz sine-wave display 6 cm high on the Type 647A CRT.

w. Set the Type 11B2A B COUPLING switch to AC, B SLOPE switch to +, the MAG switch to ×10, the A TIME/CM switch to .1 μSEC and the B TIME/CM switch to .1 μSEC.

x. Adjust the Type 11B2A A TRIG LEVEL control to obtain a stable display, then set the HORIZ DISPLAY switch to B DLY'D BY A (triggered).

y. CHECK—Display stability; a stable display having less than 1 mm of jitter must be obtained by adjusting the Type 11B2A B TRIG LEVEL control.

z. Change the Type 11B2A B SLOPE switch to — and repeat part y.

aa. Set the Type 11B2A B COUPLING switch to DC and the B SLOPE switch to +.

ab. Repeat parts v through z of this step.

ac. Disconnect all test equipment.

14. Check B Sweep 60 Hz to 50 kHz External Triggering

a. Set the Type 11B2A B COUPLING switch to AC, B SLOPE switch to +, HORIZ DISPLAY to A, MAG switch to OFF, A TIME/CM switch to 5 mSEC and B TIME/CM switch to 5 mSEC.

b. To the output connector of a low frequency sine-wave generator, connect the alligator clip leads of a clip lead adapter (black clip lead to ground, red clip lead to signal output connector). To the BNC connector of the clip lead adapter, connect a BNC T adapter.

c. Connect a 50 ohm coaxial cable to each end of the BNC T adapter, then connect a 50 ohm BNC termination to the other end of each 50 ohm coaxial cable.

d. Connect one 50 ohm coaxial cable/50 ohm BNC termination combination from the BNC T adapter to the Type 11B2A B TRIG IN connector.

e. Connect the second 50 ohm coaxial cable/50 ohm BNC termination combination from the BNC T adapter to the 10-series input connector being used.

f. Set the 10-series volts/cm switch to .05 on the channel being used.

g. Adjust the frequency and amplitude controls on the low frequency generator to produce a 60 Hz sine-wave display 4 cm high on the Type 647A CRT.

h. Adjust the Type 11B2A A TRIG LEVEL control to obtain a stable display, then set the HORIZ DISPLAY switch to B DLY'D BY A (triggered).

i. CHECK—Display stability; a stable display must be obtained by adjusting the Type 11B2A B TRIG LEVEL control.

j. Change the Type 11B2A B SLOPE switch to — and repeat part i.

k. Set the Type 11B2A B COUPLING switch to DC and the B SLOPE switch to +.

l. Repeat parts g through j of this step.

m. Set the Type 11B2A HORIZ DISPLAY switch to A.

n. Adjust the frequency and amplitude controls on the low frequency generator to produce a 50 kHz sine-wave display 4 cm high on the Type 647A CRT.

o. Set the Type 11B2A B COUPLING switch to AC, B SLOPE switch to +, the A TIME/CM switch to 20 μSEC and the B TIME/CM switch to 20 μSEC.

p. Adjust the Type 11B2A A TRIG LEVEL control to obtain a stable display, then set the HORIZ DISPLAY switch to B DLY'D BY A (triggered).

q. CHECK—Display stability; a stable display must be obtained by adjusting the Type 11B2A B TRIG LEVEL control.

r. Change the Type 11B2A B SLOPE switch to — and repeat part q.

s. Set the Type 11B2A B COUPLING switch to DC and the B SLOPE switch to +.

t. Repeat parts n through r of this step.

u. Disconnect all test equipment.

15. Check B Sweep 50 kHz to 100 MHz Internal Triggering

a. Set the Type 11B2A B COUPLING switch to AC, B SOURCE switch to INT, B SLOPE switch to + and the HORIZ DISPLAY switch to A.

b. To the output connector of a medium frequency constant amplitude sine-wave generator, connect a 5 ns coaxial cable; then connect a 50 ohm GR to BNC termination to the other end of the 5 ns coaxial cable.

c. Connect the 5 ns coaxial cable/50 ohm GR to BNC termination combination from the medium frequency generator to the 10-series input connector being used.

d. Set the 10-series volts/cm switch on the channel being used to 1.

e. Adjust the frequency and amplitude controls on the medium frequency generator to produce a 60 kHz sine-wave display 5 mm high on the Type 647A CRT.

f. Adjust the Type 11B2A A TRIG LEVEL control to obtain a stable display, then set the HORIZ DISPLAY switch to B DLY'D BY A (triggered).

g. CHECK—Display stability; a stable display must be obtained by adjusting the Type 11B2A B TRIG LEVEL control.

h. Change the Type 11B2A B SLOPE switch to — and repeat part g.

i. Set the Type 11B2A B COUPLING switch to DC and the B SLOPE switch to +.

j. Repeat parts e through h of this step.

k. Set the Type 11B2A HORIZ DISPLAY switch to A.

l. Adjust the frequency and amplitude controls on the medium frequency generator to produce a 20 MHz sine-wave display 5 mm high on the Type 647A CRT.

m. Set the Type 11B2A B COUPLING switch to AC, B SLOPE switch to +, MAG switch to ×10, the A TIME/CM switch to .5 μSEC and the B TIME/CM switch to .5 μSEC.

n. Adjust the Type 11B2A A TRIG LEVEL control to obtain a stable display, then set the HORIZ DISPLAY switch to B DLY'D BY A (triggered).

o. CHECK—Display stability; a stable display must be obtained by adjusting the Type 11B2A B TRIG LEVEL control.

p. Change the Type 11B2A B SLOPE switch to — and repeat part o.

q. Set the Type 11B2A B COUPLING switch to DC and the B SLOPE switch to +.

r. Repeat parts 1 through p of this step.

s. Set the Type 11B2A HORIZ DISPLAY switch to A.

t. Adjust the frequency and amplitude controls on the medium frequency generator to produce a 100 MHz sine-wave display 3 cm high on the Type 647A CRT.

u. Set the Type 11B2A B COUPLING switch to AC, B SLOPE switch to +, the MAG switch to ×10, the A TIME/CM switch to .1 μSEC, and the B TIME/CM switch to .1 μSEC.

v. Adjust the Type 11B2A A TRIG LEVEL control to obtain a stable display, then set the HORIZ DISPLAY switch to B DLY'D BY A (triggered).

w. CHECK—Display stability; a stable display having less than 1 mm of jitter must be obtained by adjusting the Type 11B2A B TRIG LEVEL control.

x. Change the Type 11B2A B SLOPE switch to — and repeat part w.

y. Set the Type 11B2A B COUPLING switch to DC and the B SLOPE switch to +.

z. Repeat parts t through x of this step.

aa. Disconnect all test equipment.

16. Check B Sweep 60 Hz to 50 kHz Internal Triggering

a. Set the Type 11B2A B COUPLING switch to AC, B SLOPE switch to +, HORIZ DISPLAY switch to A, MAG switch to OFF, A TIME/CM switch to 5 mSEC, and B TIME/CM switch to 5 mSEC.

b. To the output connector of a low frequency sine-wave generator, connect the alligator clip leads of a clip lead adapter (black clip lead to ground, red clip lead to signal output connector).

c. Connect a 50 ohm coaxial cable to the BNC connector of the clip lead adapter, then connect a 50 ohm BNC termination to the other end of the 50 ohm coaxial cable.

d. Connect the 50 ohm coaxial cable/50 ohm BNC termination combination from the low frequency generator to the 10-series input connector being used.

e. Set the 10-series volts/cm switch to 1 on the channel being used.

f. Adjust the frequency and amplitude controls on the low frequency generator to produce a 60 Hz sine-wave display 5 mm high on the Type 647A CRT.

g. Adjust the Type 11B2A A TRIG LEVEL control to obtain a stable display, then set the HORIZ DISPLAY switch to B DLY'D BY A (triggered).

h. CHECK—Display stability; a stable display must be obtained by adjusting the Type 11B2A B TRIG LEVEL control.

i. Change the Type 11B2A B SLOPE switch to — and repeat part h.

j. Set the Type 11B2A B COUPLING switch to DC and the B SLOPE switch to +.

k. Repeat parts f through i of this step.

l. Set the Type 11B2A HORIZ DISPLAY switch to A.

m. Adjust the frequency and amplitude controls on the low frequency generator to produce a 50 kHz sine-wave display 5 mm high on the Type 647A CRT.

n. Set the Type 11B2A B COUPLING switch to AC, B SLOPE switch to +, the A TIME/CM switch to 20 μSEC and the B TIME/CM switch to 20 μSEC.

o. Adjust the Type 11B2A A TRIG LEVEL control to obtain a stable display, then set the HORIZ DISPLAY switch to B DLY'D BY A (triggered).

p. CHECK—Display stability; a stable display must be obtained by adjusting the Type 11B2A B TRIG LEVEL control.

q. Change the Type 11B2A B SLOPE switch to — and repeat part p.

r. Set the Type 11B2A B COUPLING switch to DC and the B SLOPE switch to +.

s. Repeat parts m through q of this step.

t. Disconnect all test equipment.

17. Check B Trigger Level Mechanical Zero and Range

a. Set the Type 11B2A TRIG MODE switch to NORM, B COUPLING switch to DC, B SLOPE switch to +, HORIZ DISPLAY switch to A, A TIME/CM switch to 1 mSEC, and B TIME/CM switch to 1 mSEC.

b. Connect a 10× probe from the 10-series input connector being used to a sine-wave signal source of power line frequency (such as pin 30, approximately 6.3 volts AC, of the horizontal inter-connecting plug in the Type 647A).

c. Set the 10-series volts/cm switch for a CRT display about 3 cm high and set the position control to midrange.

d. Adjust the Type 11B2A A TRIG LEVEL control to obtain a stable display, then set the HORIZ DISPLAY switch to B DLY'D BY A (triggered).

e. Rotate the TRIG LEVEL control slowly from one extreme to the other extreme, noting the two positions of the control when the display just triggers.

f. CHECK—TRIG LEVEL control position; when the TRIG LEVEL control is centered between the two positions noted above, the dot on the TRIG LEVEL control should be opposite the 0. If it is not, loosen the knob set screw with a $^1/_{16}$ hexagonal wrench and reposition the knob so the dot is opposite the 0.

g. Disconnect the 10× probe.

h. Set the Type 11B2A TRIG MODE switch to AUTO, B COUPLING switch to AC, B SOURCE switch to EXT, and the HORIZ DISPLAY switch to A.

i. Connect a BNC T adapter to the Type 647A cal out connector, then connect a 50 ohm coaxial cable from one end of the BNC T adapter to the 10-series input connector being used. Connect another 50 ohm coaxial cable from the remaining BNC T adapter connection to the Type 11B2A B TRIG IN connector.

j. Set the Type 647A calibrator switch for an output square-wave amplitude of 20 volts.

k. Adjust the 10-series volts/cm switch to obtain a display 2 cm high on the CRT.

l. Adjust the Type 11B2A A TRIG LEVEL control to obtain a stable display, then set the HORIZ DISPLAY switch to B DLY'D BY A (triggered).

m. Rotate the B TRIG LEVEL control slowly from one extreme to the other extreme.

n. CHECK—Display stability; display must not be triggered when the B TRIG LEVEL control is at either extreme.

o. Disconnect all test equipment.

NOTES

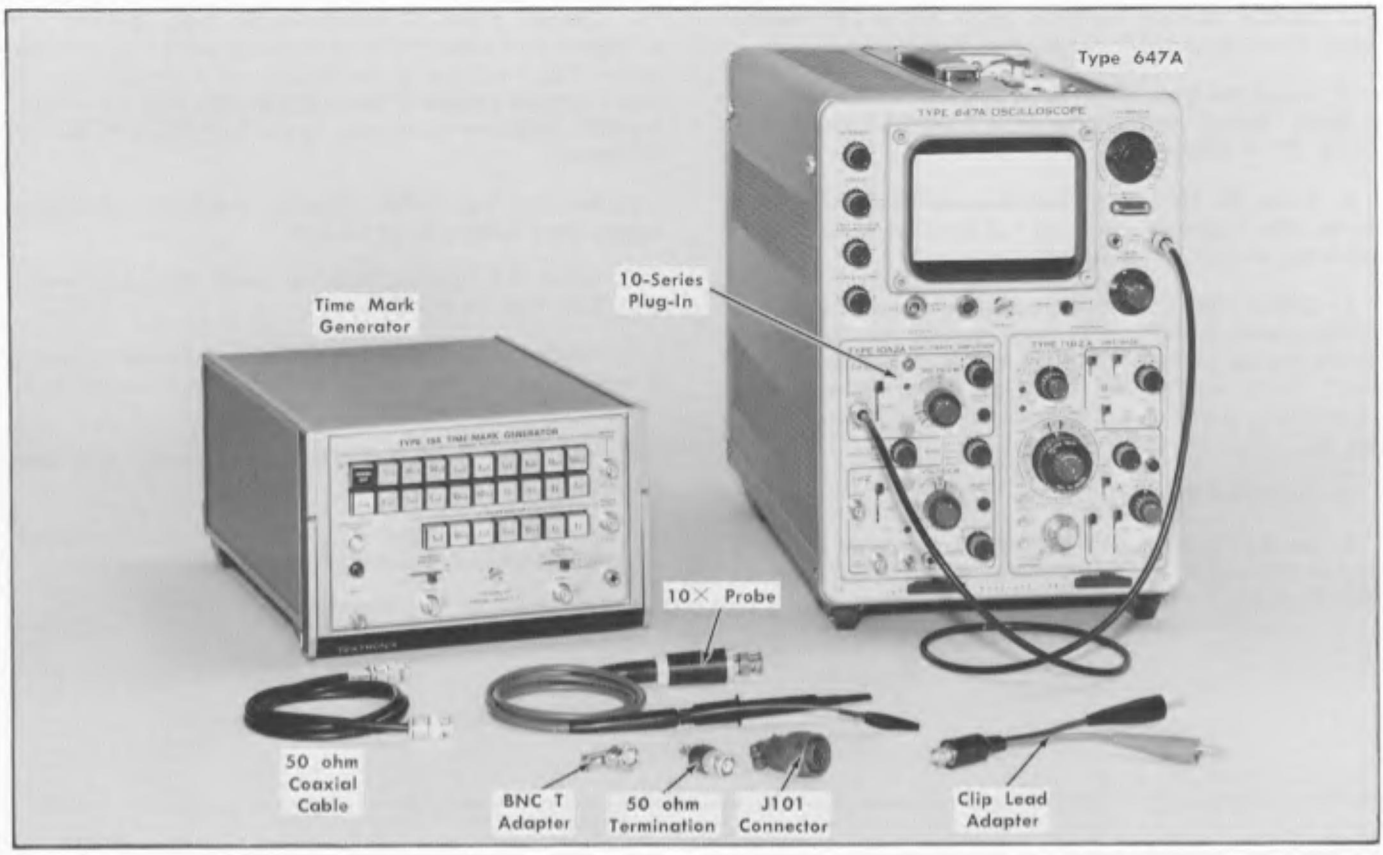

Fig. 6-4. Initial test equipment setup for steps 18 through 33.

Type 11B2A

TRIG MODE	NORM
A SLOPE	+
A TRIG LEVEL	Midrange
A HF STABILITY	Midrange
A COUPLING	AC
A SOURCE	INT
B COUPLING	AC
B SOURCE	INT
B TRIG LEVEL	Midrange
B SLOPE	+
HORIZ DISPLAY	A
MAG	OFF
A TIME/CM	1 mSEC
B TIME/CM	1 mSEC
A VARIABLE (A Time/cm)	CALIB
B VARIABLE (B Time/cm)	CALIB
DELAY TIME MULT	1.00

10-Series

Volts/Cm	10
Variable (Volts/Cm)	Cal
Position	Midrange
Input Coupling	AC
Invert	Pushed in
Trigger	Norm
Mode	Ch 1

Type 647A

Intensity	Usable display brightness
Focus	Well defined display
Astigmatism	Well defined display
Scale Illum	As desired
Calibrator	20 V
Position	Midrange
Fine (Position)	Midrange

18. Check Single Sweep Triggering Mode

a. Test equipment is shown in Fig. 6-4.

b. Connect a 50 ohm coaxial cable from the Type 647A cal out connector to the 10-series input connector being used.

c. Set the Type 647A calibrator switch for an output square-wave amplitude of 20 volts.

d. Adjust the 10-series volts/cm switch to obtain a display 2 cm high on the Type 647A CRT.

e. Adjust the Type 11B2A A TRIG LEVEL control to obtain a stable display.

f. Set the 10-series input coupling switch to gnd for the channel being used and note that the display disappears.

g. Set the Type 11B2A TRIG MODE switch to SINGLE SWEEP and momentarily depress the RESET button.

h. CHECK—Reset light; light should now be lit.

i. Set the 10-series input coupling switch to AC for the channel being used.

j. CHECK—Display and reset light; sweep should run once and only once. After sweep has run once, reset light should extinguish.

k. Disconnect the 50 ohm coaxial cable from the Type 647A cal out connector, then connect a BNC T adapter to the Type 647A cal out connector. Connect the 50 ohm coaxial cable just removed to one end of the BNC T adapter. To the other end of the BNC T adapter connect a second 50 ohm coaxial cable.

l. To the other end of the second 50 ohm coaxial cable, connect a clip lead adapter. Connect the red lead of the clip lead adapter to pin F of the J101 connector (on rear panel of Type 647A) via a short piece of wire. Connect the black lead of the clip lead adapter to a ground point.

m. Set the Type 647A calibrator switch for an output square-wave amplitude of 5 volts.

n. Disconnect the red lead of the clip lead adapter from pin F of the J101 connector, and note that there is no display on the Type 647A CRT.

o. Reconnect the red lead of the clip lead adapter to pin F of the J101 connector.

p. CHECK—Display; sweep should run recurrently, i.e., just as it would if Type 11B2A TRIG MODE switch were set to NORM.

q. Turn the Type 647A calibrator to off and disconnect all test equipment.

19. Adjust Delayed Sweep Start and A Sweep Calibration ◐

a. Set the Type 11B2A TRIG MODE switch to AUTO, A TIME/CM switch to 1 mSEC, the B TIME/CM switch to 5 μSEC, and DELAY TIME MULT control to 1.00.

b. Connect a 50 ohm coaxial cable from the time mark generator marker output connector through a 50 ohm termination to the 10-series input connector being used.

c. Set the time mark generator controls to produce only 1 ms time markers.

d. Set the 10-series volts/cm switch for a display about 3 cm in amplitude.

e. Adjust the Type 11B2A A TRIG LEVEL control for a stable display, then set the HORIZ DISPLAY switch to A INTEN BY B (untriggered).

f. Horizontally position the display so the second time marker is aligned with the first graticule line; see Fig. 6-5.

g. CHECK—Brightened pulse trace position; it should be brightening the second time marker.

h. ADJUST—Delay Start control, R150 (see Fig. 6-6) until the brightened pulse is brightening the second time marker.

i. Set the Type 11B2A DELAY TIME MULT control to 9.00.

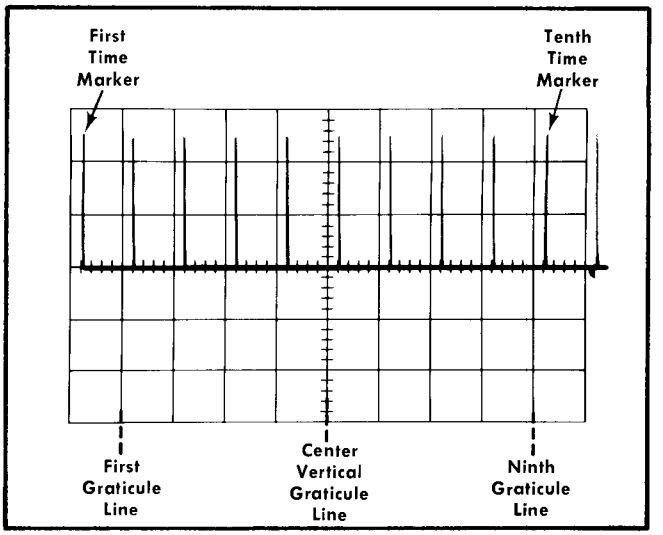

Fig. 6-5. Illustration showng the nomenclature being used.

j. CHECK—Brightened pulse trace position; it should be brightening the tenth time marker.

k. ADJUST—A Swp Cal control, R160W (see Fig. 6-6) until the brightened pulse is brightening the tenth time marker.

l. Reset the Type 11B2A DELAY TIME MULT control to 1.00 and repeat parts g through k of this step.

m. Set the Type 11B2A HORIZ DISPLAY switch to B DLY'D BY A (untriggered) and the DELAY TIME MULT control to 1.00.

n. CHECK—Brightened pulse trace position; it should start at the beginning of the sweep.

o. ADJUST—Delay Start control, R150 (see Fig. 6-6) until the brightened pulse just starts at the start of the sweep.

p. Set the Type 11B2A DELAY TIME MULT conrol to 9.00.

q. CHECK—Brightened pulse trace position; it should start at the beginning of the sweep.

r. ADJUST—A Swp Cal control, R160W (see Fig. 6-6) until the brightened pulse just starts at the start of the sweep.

s. Repeat parts m through r of this step.

t. INTERACTION—Effects all A sweep timing.

20. Check Delay Time Multiplier Control Linearity

a. Set the Type 11B2A DELAY TIME MULT control to 8.00, then rotate the control either clockwise or counterclockwise until the brightened pulse starts at the beginning of the sweep.

b. CHECK—DELAY TIME MULT dial reading; it must read within 1.5 minor dial division of 8.00 major dial divisions.

c. Repeat parts a and b of this step using Type 11B2A DELAY TIME MULT control settings of 2.00, 3.00, 4.00, 5.00, 6.00 and 7.00. In all cases the error must not exceed 1.5 minor dial divisions.

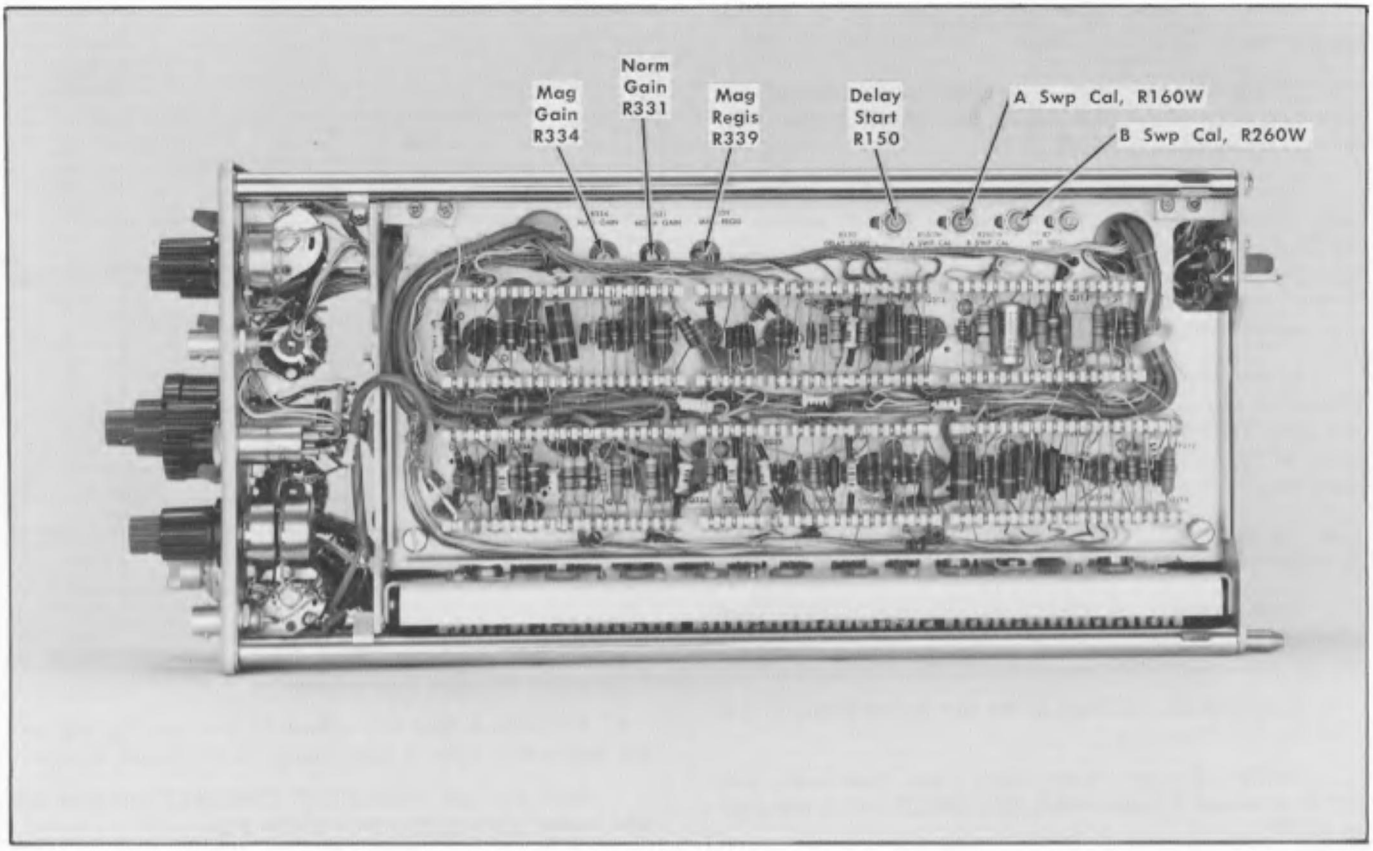

Fig. 6-6. Location of Delay Start, R150, A Swp Cal, R160W, Norm Gain, R331, Mag Gain, R334, Mag Regis, R339, and B Swp Cal, R260W.

21. Adjust Normal and Magnifier Gain

a. Set the Type 11B2A HORIZ DISPLAY switch to A.

b. Check that the second time marker is exactly lined up with the first graticule line.

c. CHECK—Tenth time marker alignment; it should be exactly lined up with the ninth graticule line.

d. ADJUST—Norm Gain control, R331 (see Fig. 6-6) until the tenth time marker is exactly lined up with the ninth graticule line.

e. Repeat parts b through d of this step until the second and tenth time markers are exactly lined up with the first and ninth graticule lines respectively.

f. CHECK—Time marker linearity; no time marker between the first and ninth graticule lines should be more than 1 mm away from its respective graticule line.

g. Set the time mark generator controls to produce only 0.1 ms time markers

h. Reset if necessary the 10-series volts/cm switch to obtain a display about 3 cm in amplitude.

i. Set the Type 11B2A MAG switch to ×10 and adjust the A TRIG LEVEL control to obtain a stable display.

j. Align the second time marker exactly with the first graticule line.

k. CHECK—Tenth time marker alignment; it should be exactly lined up with the ninth graticule line.

l. ADJUST—Mag Gain control, R334 (see Fig. 6-6) until the tenth time marker is exactly lined up with the ninth graticule line.

m. Repeat parts j through l of this step until the second and tenth time markers are exactly lined up with the first and ninth graticule lines respectively.

n. CHECK—Time marker linearity; no time marker between the first and ninth graticule lines should be more than 1 mm away from its respective graticule line.

o. INTERACTION—Effects all A and B sweep timing.

22. Adjust Magnifier Registration

a. Set the Type 11B2A MAG switch to OFF.

b. Set the time mark generator controls to produce only 1 ms time markers.

c. Adjust the Type 11B2A A TRIG LEVEL control to obtain a stable display.

d. Position the sixth time marker so it is lined up with the center vertical graticule line.

e. Set the Type 11B2A MAG switch to ×10 and reposition the time marker near the center vertical graticule line so it is exactly lined up with the center vertical graticule line.

f. Set the Type 11B2A MAG switch to OFF.

g. CHECK—Sixth time marker location; it should be within 1 mm of the center vertical graticule line.

h. ADJUST—Mag Regis control, R339 (see Fig. 6-6) until the sixth time marker is exactly lined up with the center vertical graticule line.

i. Repeat parts e through h of this step until the sixth time marker remains within 1 mm of the center vertical graticule line.

23. Check A Sweep Length

a. Set the Type 11B2A MAG switch to OFF.

b. Adjust the A TRIG LEVEL control until a stable display has been obtained.

c. Position the third time marker so it is exactly lined up with the first graticule line.

d. CHECK—Position of sweep ending; should lie about three-quarters of the way from the ninth to the tenth graticule line; i.e., sweep length should lie between 10.5 cm and 11 cm.

24. Adjust B Sweep Calibration ◐

a. Set the Type 11B2A HORIZ DISPLAY switch to B DLY'D BY A (untriggered), A TIME/CM switch to 2 mSEC, B TIME/CM switch to 1 mSEC and the DELAY TIME MULT to 1.00 and adjust the A TRIG LEVEL control for a stable display.

b. Position the display so the second time marker is exactly lined up with the first graticule line.

c. CHECK—Tenth time marker alignment; it should be exactly lined up with the ninth graticule line.

d. ADJUST—B Swp Cal control, R260W (see Fig. 6-6) until the tenth time marker is exactly lined up with the ninth graticule line.

e. Repeat parts b through d of this step until the second and tenth time markers are exactly lined up with the first and ninth graticule lines respectively.

f. INTERACTION—Effects all B sweep timing.

25. Check B Sweep Length

a. Position the third time marker so it is exactly lined up with the first graticule line.

b. CHECK—Position of sweep ending; should lie about three quarters of the way from the ninth to the tenth graticule line; i.e., sweep length should lie between 10.2 cm and 11 cm.

26. Check A and B Variable Time/Cm Controls and Uncal Light

a. Note one time marker per centimeter of graticule area with UNCAL light not lit. Rotate the Type 11B2A B VARIABLE (B TIME/CM) control to its fully counterclockwise position. Shortening of the sweep is normal at this point.

b. CHECK—Number of time markers per centimeter, UNCAL light and control operation; there should be at least five time markers per two centimeters of graticule area, indicating an attenuation ratio of at least 2.5:1. The UNCAL light must be lit whenever the Type 11B2A B VARIABLE (B TIME/CM) control is away from its CALIB position. The Type 11B2A B VARIABLE (B TIME/CM) control must operate smoothly from one extreme to the other extreme.

c. Return the Type 11B2A B VARIABLE (B TIME/CM) control to its CALIB position.

d. Set the Type 11B2A HORIZ DISPLAY switch to A and the A TIME/CM switch to 1 mSEC.

e. Note one time marker per centimeter of graticule area with the UNCAL light not lit. Rotate the Type 11B2A VARIABLE A (A TIME/CM) control to its fully counterclockwise position.

f. CHECK—Number of time markers per centimeter, UNCAL light and control operation; there should be at least five time markers per two centimeters of graticule area, indicating an attenuation ratio of at least 2.5:1. The UNCAL light must be lit whenever the Type 11B2A VARIABLE A (A TIME/CM) control is away from its CALIB position. The Type 11B2A VARIABLE A (A TIME/CM) control must operate smoothly from one extreme to the other extreme.

g. Return the Type 11B2A VARIABLE A (A TIME/CM) control to its CALIB position.

27. Adjust A Sweep One Microsecond Sweep Rate ◐

a. Set the Type 11B2A A TIME/CM switch to 1 μSEC, the B TIME/CM switch to .1 μSEC and the DELAY TIME MULT to 1.00.

b. Set the time mark generator controls to produce only 1 μs time markers.

c. Reset the 10-series volts/cm switch if necessary, to obtain a display about 3 cm in amplitude.

d. Adjust the Type 11B2A A TRIG LEVEL for a stable display.

e. CHECK—Time marker display; there should be one time marker per centimeter of display within 1 mm.

NOTE

To reach the timing adjustments it will be necessary to unscrew the two captive screws securing the swing-out chassis and to block open the swing-out chassis enough to reach the adjustments.

f. ADJUST—C160C (see Fig. 6-7) until there is a display of one time marker per centimeter.

g. Set the Type 11B2A HORIZ DISPLAY switch to A INTEN BY B (untriggered) and adjust the DELAY TIME MULTI control so the second time marker is being brightened, i.e., the DELAY TIME MULT control set near 1.00.

h. Set the Type 11B2A HORIZ DISPLAY switch to B DLY'D BY A (untriggered) and adjust the DELAY TIME MULT control so that the sweep starts exactly at the top of the magnified second time marker.

i. Note and record the difference between the DELAY TIME MULT control reading and 1.00.

j. Set the Type 11B2A HORIZ DISPLAY switch to A INTEN BY B (untriggered) and adjust the DELAY TIME MULT control to 9.00 ± the number recorded in part i. The tenth time marker should now be brightened.

k. Set the Type 11B2A HORIZ DISPLAY switch to B DLY'D BY A (untriggered).

l. CHECK—Sweep start; sweep should start exactly at the top of the magnified tenth time marker.

m. ADJUST—C160C (see Fig. 6-7) until the sweep starts at the top of the magnified tenth time marker.

n. Repeat parts g through m until the interaction has been removed.

28. Check A Sweep 2 Microsecond To 5 Second Sweep Rates

a. Set the Type 11B2A HORIZ DISPLAY switch to A INTEN BY B (untriggered), A TIME/CM switch to 2 μSEC, the B TIME/CM switch to .1 μSEC, and the DELAY TIME MULT to 1.00.

b. Set the time mark generator controls to produce only 1 μs time marker.

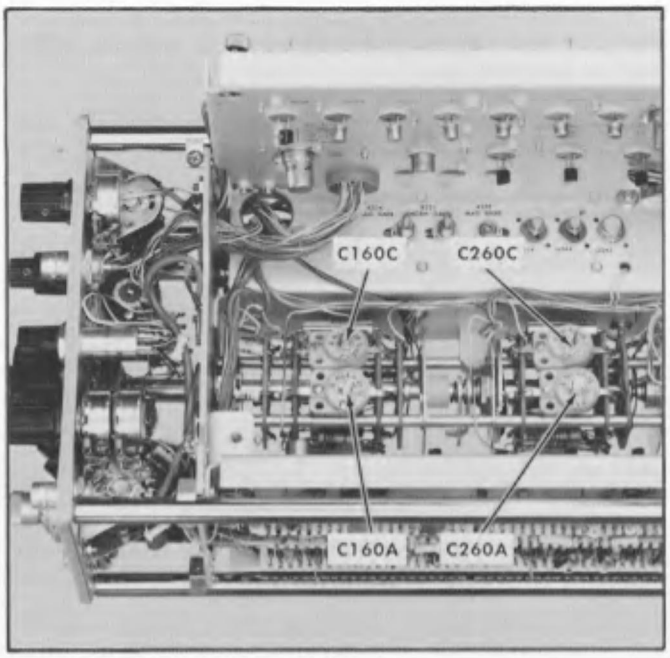

Fig. 6-7. Location of A and B sweep timing adjustments.

c. Reset the 10-series volts/cm switch if necessary, to obtain a display about 3 cm in amplitude.

d. Adjust the Type 11B2A A TRIG LEVEL control for a stable display.

TABLE 6-1
Checking A Sweep 2 μs to 5 s Sweep Rates

A TIME/CM Switch Setting	B TIME/CM Switch Setting	Time Markers Applied From Time Mark Generator	Alignment Time Marker	Check Time Marker	Maximum Type 11B2A DELAY TIME MULT Control Error
5 μSEC	.5 μSEC	5 μs	2nd	10th	±0.03
10 μSEC	1 μSEC	10 μs	2nd	10th	±0.03
20 μSEC	1 μSEC	10 μs	3rd	19th	±0.03
50 μSEC	5 μSEC	50 μs	2nd	10th	±0.03
.1 mSEC	10 μSEC	.1 ms	2nd	10th	±0.03
.2 mSEC	10 μSEC	.1 ms	3rd	19th	±0.03
.5 mSEC	50 μSEC	.5 ms	2nd	10th	±0.03
1 mSEC	.1 mSEC	1 ms	2nd	10th	±0.03
2 mSEC	.1 mSEC	1 ms	3rd	19th	±0.03
5 mSEC	.5 mSEC	5 ms	2nd	10th	±0.03
10 mSEC	1 mSEC	10 ms	2nd	10th	±0.03
20 mSEC	1 mSEC	10 ms	3rd	19th	±0.03
50 mSEC	5 mSEC	50 ms	2nd	10th	±0.03
.1 SEC[1]	10 mSEC	.1 s	2nd	10th	±0.08
.2 SEC	10 mSEC	.1 s	3rd	19th	±0.08
.5 SEC	50 mSEC	.5 s	2nd	10th	±0.08
1 SEC	.1 SEC	1 s	2nd	10th	±0.08
2 SEC	.1 SEC	2 s	3rd	19th	±0.08
5 SEC	.5 SEC	5 s	2nd	10th	±0.08

[1]Set the Type 11B2A TRIG MODE switch to NORM, the HORIZ DISPLAY switch to A INTEN BY B and adjust the A TRIG LEVEL for a stable display, then proceed with part a of this step for each of the remaining Type 11B2A A TIME/CM switch settings in Table 6-1.

e. Adjust the DELAY TIME MULT control so the third time marker is being brightened; i.e., the DELAY TIME MULT control set near 1.00.

f. Set the Type 11B2A HORIZ DISPLAY switch to B DLY'D BY A (untriggered) and adjust the DELAY TIME MULT control so that the sweep starts exactly at the top of the magnified third time marker.

g. Note and record the difference between the DELAY TIME MULT control reading and 1.00.

h. Set the Type 11B2A HORIZ DISPLAY switch to A INTEN BY B (untriggered) and adjust the DELAY TIME MULT control to 9.00 ± the number recorded in part g. The nineteenth time marker should now be brightened.

i. Set the Type 11B2A HORIZ DISPLAY switch to B DLY'D BY A (untriggered).

j. CHECK—Sweep start; sweep should start within 0.03 Type 11B2A DELAY TIME MULT control divisions of the top of the magnified nineteenth time marker.

k. Repeat parts a through j of this step for each Type 11B2A A TIME/CM switch setting in Table 6-1, substituting the Type 11B2A A TIME/CM and B TIME/CM switch settings, time markers and maximum Type 11B2A DELAY TIME MULT control error information in the parts of this step where applicable.

29. Adjust and Check A Sweep .1 Microsecond To .5 Microsecond Sweep Rates

a. Set the Type 11B2A HORIZ DISPLAY switch to A and the A TIME/CM switch to .1 μSEC.

b. Set the time mark generator controls to produce only 0.1 μs time markers.

c. Adjust the Type 11B2A A TRIG LEVEL for a stable display.

d. Position the second time marker so it is exactly aligned with the first graticule line.

e. CHECK—Tenth time marker location; it should be exactly lined up with the ninth graticule line.

f. ADJUST—C160A (see Fig. 6-7) until the tenth time marker is exactly lined up with the ninth graticule line.

g. Repeat parts d through f of this step until the second and tenth time markers are exactly aligned with the first and ninth graticule lines respectively.

h. Set the Type 11B2A A TIME/CM switch to .2 μSEC and adjust the A TRIG LEVEL control to obtain a stable display.

i. Align the third time marker exactly with the first graticule line.

j. CHECK—Nineteenth time marker location; it should be within 1 mm of the ninth graticule line.

k. Set the Type 11B2A A TIME/CM switch to .5 μSEC.

l. Set the time mark generator controls to produce only 1 μs time markers.

m. Adjust the Type 11B2A A TRIG LEVEL to obtain a stable display.

n. Align the first time marker exactly with the first graticule line.

o. CHECK—Fifth time marker location; it should be within 1 mm of the ninth graticule line.

30. Adjust and Check B Sweep .1 Microsecond To 5 Microsecond Sweep Rates

a. Set the Type 11B2A HORIZ DISPLAY switch to B DLY'D BY A (untriggered), A TIME/CM switch to 1 μSEC, B TIME/CM switch to .1 μSEC and the DELAY TIME MULT control to its fully counterclockwise position; that is, for a control reading of about 0.30.

b. Set the time mark generator controls to produce only 0.1 μs time markers.

c. Adjust the Type 11B2A A TRIG LEVEL to obtain a stable display.

d. Align the second time marker exactly with the first graticule line.

e. CHECK—Tenth time marker location; it should be exactly lined up with the ninth graticule line.

f. ADJUST—C260A (see Fig. 6-7) until the tenth time marker is exactly lined up with the ninth graticule line.

g. Repeat parts d through f of this step until the second and tenth time markers are exactly aligned with the first and ninth graticule lines respectively.

h. Set the Type 11B2A B TIME/CM switch to .2 μSEC and adjust the A TRIG LEVEL to obtain a stable display.

i. Align the third time marker exactly with the first graticule line.

j. CHECK—Nineteenth time marker location; it should be within 1 mm of the ninth graticule line.

k. Set the Type 11B2A B TIME/CM switch to .5 μSEC.

l. Adjust the time mark generator controls to produce only 1 μs time marker.

m. Adjust the Type 11B2A A TRIG LEVEL to obtain a stable display.

n. Align the first time marker exactly with the first graticule line.

o. CHECK—Fifth time marker location; it should be within 1 mm of ninth graticule line.

p. Set the Type 11B2A A TIME/CM switch to 10 μSEC, the B TIME/CM switch to 1 μSEC and adjust the A TRIG LEVEL control to obtain a stable display.

q. Align the second time marker exactly with the first graticule line.

r. CHECK—Tenth time marker location; it should be exactly lined up with the ninth graticule line.

s. ADJUST—C260C (see Fig. 6-7) until the tenth time marker is exactly lined up with the ninth graticule line.

t. Set the Type 11B2A B TIME/CM switch to 2 μSEC.

u. Adjust the Type 11B2A A TRIG LEVEL to obtain a stable display.

v. Align the third time marker exactly with the first graticule line.

w. CHECK—Nineteenth time marker location; it should be within 1 mm of the ninth graticule line.

x. Set the Type 11B2A B TIME/CM switch to 5 μSEC.

y. Adjust the time mark generator controls to produce only 5 μs time markers.

z. Adjust the Type 11B2A A TRIG LEVEL to obtain a stable display.

aa. Align the second time marker exactly with the first graticule line.

ab. CHECK—Tenth time marker location; it should be within 1 mm of the ninth graticule line.

31. Check Ten Times Magnifier Accuracy

a. Set the MAG switch to ×10.

b. CHECK—Using the A and B TIME/CM switch and time-mark generator settings given in Table 6-2, check B magnified sweep timing within given tolerances over the middle eight divisions of the magnified display. Adjust the A TRIG LEVEL control as necessary to maintain a stable display. Magnifier light must be on.

c. Set the HORIZ DISPLAY switch to A.

d. CHECK—Using the A TIME/CM switch and time-mark generator settings given in Table 6-2, check A magnified sweep timing within given tolerances over the middle eight divisions of the magnified display. Adjust the A TRIG LEVEL control as necessary to maintain a stable display.

TABLE 6-2

A and B Magnified Accuracy

A and B TIME/CM Switch Setting	Time-Mark Generator Output	CRT Display (markers/division)	Allowable Error for Given Accuracy
.1 μSEC	10 nanosecond	1	0.28 centimeter (within 3.5%)
.2 μSEC	10 nanosecond	2	
.5 μSEC	50 nanosecond	1	0.2 centimeter (within 2.5%)
1 μSEC	0 1 microsecond	1	
2 μSEC	0.1 microsecond	2	
5 μSEC	0.5 microsecond	1	
10 μSEC	1 microsecond	1	
20 μSEC	1 microsecond	2	
50 μSEC	5 microsecond	1	
.1 mSEC	10 microsecond	1	
.2 mSEC	10 microsecond	2	
.5 mSEC	50 microsecond	1	
1 mSEC	0.1 millisecond	1	
2 mSEC	0.1 millisecond	2	
5 mSEC	0.5 millisecond	1	
10 mSEC	1 millisecond	1	
20 mSEC	1 millisecond	2	
50 mSEC	5 millisecond	1	
.1 SEC	10 millisecond	1	0.32 centimeter (within 4%)
.2 SEC	10 millisecond	2	
.5 SEC	50 millisecond	1	
1 SEC	0.1 second	1	
2 SEC	0.1 second	2	
5 SEC	0.5 second	1	

NOTES

32. Check B Sweep 10 Microsecond To 5 Second Sweep Rates

a. Set the Type 11B2A HORIZ DISPLAY switch to B DLY'D BY A (untriggered), MAG switch to OFF, A TIME/CM switch to 10 μSEC and B TIME/CM switch to 10 μSEC.

b. Set the time mark generator controls to produce only 10 μs time markers.

c. Adjust the Type 11B2A A TRIG LEVEL control for a stable display.

d. Align the first time marker exactly with the first graticule line.

e. CHECK—Ninth time marker location; it should be within 1 mm of the ninth graticule line.

f. Repeat parts a through e of this step for each Type 11B2A B TIME/CM switch setting in Table 6-3, substituting the Type 11B2A A TIME/CM and B TIME/CM switch setting, time markers, alignment time marker (part d), check time marker (part e), and maximum display error information in the parts of this step where applicable.

33. Check B Sweep Delay Time Jitter

a. Set the Type 11B2A TRIG MODE switch to AUTO, HORIZ DISPLAY switch to A INTEN BY B (untriggered), A TIME/CM switch to 1 mSEC, B TIME/CM switch to 1 μSEC, and DELAY TIME MULT control to 1.00.

b. Set the time mark generator controls to produce only 1 ms time markers.

c. Adjust the Type 11B2A A TRIG LEVEL control to obtain a stable display.

TABLE 6-3
Checking B Sweep 10 μs to 5 s Sweep Rates

B TIME/CM Switch Setting	A TIME/CM Switch Setting	Time Markers Applied From Time Mark Generator	Alignment Time Marker	Check Time Marker	Maximum Display Error
20 μSEC	20 μSEC	10 μs	3rd	19th	1 mm
50 μSEC	50 μSEC	50 μs	1st	9th	1 mm
.1 mSEC	.1 mSEC	.1 ms	1st	9th	1 mm
.2 mSEC	.2 mSEC	.1 ms	3rd	19th	1 mm
.5 mSEC	.5 mSEC	.5 ms	1st	9th	1 mm
1 mSEC	1 mSEC	1 ms	1st	9th	1 mm
2 mSEC	2 mSEC	1 ms	3rd	19th	1 mm
5 mSEC	5 mSEC	5 ms	1st	9th	1 mm
10 mSEC	10 mSEC	10 ms	1st	9th	1 mm
20 mSEC	20 mSEC	10 ms	3rd	19th	1 mm
50 mSEC	50 mSEC	50 ms	1st	9th	1 mm
.1 SEC	.1 SEC	.1 s	1st	9th	2 mm
.2 SEC	.2 SEC	.1 s	3rd	19th	2 mm
.5 SEC	.5 SEC	.5 s	1st	9th	2 mm
1 SEC	1 SEC	1 s	1st	9th	2 mm
2 SEC	2 SEC	1 s	3rd	19th	2 mm
5 SEC	5 SEC	5 s	1st	9th	2 mm

NOTES

d. Set the Type 11B2A DELAY TIME MULT control so the second time marker is being brightened by the brightening pulse; then set the HORIZ DISPLAY switch to B DLY'D BY A (untriggered).

e. Adjust the Type 11B2A DELAY TIME MULT control so the leading edge of the magnified time marker is displayed.

f. CHECK—Time marker leading edge jitter; amount of jitter must not be greater than 3 mm.

g. Disconnect all test equipment.

NOTES

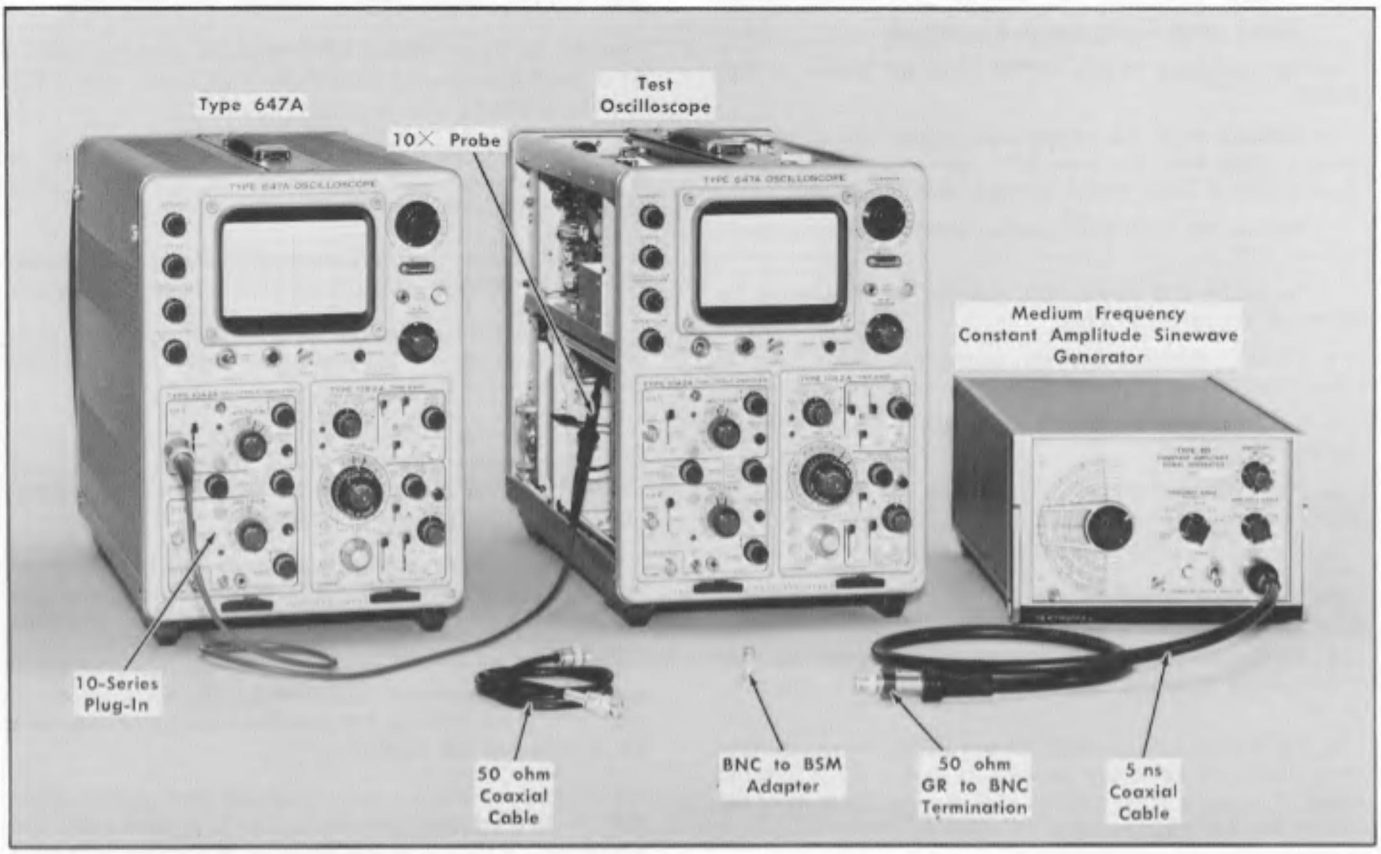

Fig. 6-8. Initial test equipment setup for steps 34 through 36.

Type 11B2A

TRIG MODE	FREE RUN
A SLOPE	+
A TRIG LEVEL	Midrange
A HF STABILITY	Midrange
A COUPLING	AC
A SOURCE	INT
B COUPLING	DC
B SOURCE	EXT
B TRIG LEVEL	Midrange
B SLOPE	+
HORIZ DISPLAY	A
MAG	OFF
A TIME/CM	50 μSEC
B TIME/CM	50 μSEC
A VARIABLE (A TIME/CM)	CALIB
B VARIABLE (B TIME/CM)	CALIB
DELAY TIME MULTI	1.00

10-Series

Volts/Cm	.5
Variable (Volts/Cm)	Cal
Position	Midrange
Input Coupling	AC
Invert	Pushed in
Trigger	Norm
Mode	Ch 1

Type 647A

Intensity	Usable display brightness
Focus	Well defined display
Astigmatism	Well defined display
Scale Illum	As desired
Calibrator	5 V
Position	Midrange
Fine (Position)	Midrange

34. Check Alternate Trace Synchronization Pulse

a. Test equipment is shown in Fig. 6-8.

b. Connect a 47 pF capacitor from pin 17 of the Type 647A J11 (vertical plug-in inter-connecting connector), to ground. It will be necessary to remove the left side cover from the Type 647A.

c. Connect a 10× probe from the test oscilloscope vertical input connector to pin 17 of the Type 647A J11 connector.

d. Set the test oscilloscope for a vertical deflection factor (at the probe tip) of 2 volts/division, AC coupled and a sweep rate of 0.5 ms/division.

e. CHECK—Test oscilloscope displayed pulse amplitude; pulses must be at least four volts high.

f. Disconnect the test oscilloscope, the 10× probe, and the 47 pF capacitor.

g. Replace left side cover on the Type 647A.

35. Check External Horizontal Deflection Sensitivity and Frequency Response

a. Set the Type 11B2A HORIZ DISPLAY switch to EXT INPUT.

b. Connect a 5 volt square-wave signal via a 50 ohm coaxial cable from the Type 647A cal out connector to the Type 11B2A B TRIG INPUT OR EXT INPUT connector.

c. Reduce the Type 647A display intensity to avoid burning the CRT.

d. Vertically and horizontally position the display to the center of the graticule area.

e. CHECK—Distance between spots; it must be between 4.5 cm and 5.5 cm.

f. Set the Type 647A calibrator for a 0.5 volt output square-wave signal.

g. Vertically and horizontally position the display to the center of the graticule area.

h. Set the Type 11B2A MAG switch to ×10.

i. CHECK—Distance between spots; it must be between 4.5 cm and 5.5 cm.

j. Disconnect the 50 ohm coaxial cable and set the Type 11B2A MAG switch to OFF, and the Type 647A calibrator to off.

k. To the output connector of a medium frequency constant amplitude sine-wave generator connect a 5 ns coaxial cable. Connect a 50 ohm GR to BNC termination to the other end of the 5 ns coaxial cable.

l. Connect the 5 ns coaxial cable/50 ohm GR to BNC termination combination from the medium frequency generator to the Type 11B2A B TRIG INPUT OR EXT INPUT connector.

m. Set the medium frequency generator output frequency switch to its fixed frequency (50 kHz).

n. Adjust the output amplitude control of the medium frequency generator until a trace exactly 4 cm long is displayed on the CRT of the Type 647A.

o. Change the medium frequency generator output frequency switch to its variable frequency position.

p. Increase the output frequency of the medium frequency generator until the trace shortens to 2.8 cm.

q. CHECK—Generator output frequency; it should be at least 3 MHz; in other words, bandwidth not more than —3 dB at 3 MHz.

r. Disconnect all test equipment.

36. Check Front-Panel Output Waveforms

a. Set the Type 11B2A HORIZ DISPLAY switch to B DLY'D BY A (untriggered), and the DELAY TIME MULT control fully counterclockwise.

b. Connect a 50 ohm cable to the test oscilloscope vertical input connector. To the other end of the 50 ohm coaxial cable, connect a BNC to BSM adapter.

c. Connect the test oscilloscope/50 ohm coaxial cable/BNC to BSM adapter to the + GATE B front panel connector.

d. Set the test oscilloscope for a vertical deflection factor of 5 volts/division, AC coupled and a sweep rate of 0.1 ms/division.

e. CHECK—Test oscilloscope display; it should consist of a step function waveform about +15 volts in amplitude. The wide part of the step function waveform should correspond to the duration of the sweep.

f. Disconnect the test oscilloscope/50 ohm coaxial cable/BNC to BSM adapter from the + GATE B front panel connector and connect it to the + GATE A front panel connector.

g. CHECK—Test oscilloscope display; it should consist of a step function waveform about +15 volts in amplitude. The wide part of the step function waveform should correspond to the duration of the sweep.

h. Disconnect the test oscilloscope/50 ohm coaxial cable/BNC to BSM adapter from the + GATE A front panel connector and connect it to the SWEEP A front panel connector.

i. CHECK— Test oscilloscope display; it should consist of a sawtooth waveform about +10 volts in amplitude. The width of the sawtooth should correspond to the duration of the sweep.

j. Disconnect the test oscilloscope/50 ohm coaxial cable/BNC to BSM adapter from the SWEEP A front panel connector and connect it to the SWEEP B front panel connector.

k. CHECK—Test oscilloscope display; it should consist of a sawtooth waveform about +10 volts in amplitude. The width of the sawtooth waveform should correspond to the duration of the sweep.

l. Disconnect all test equipment.

This completes the calibration of the Type 11B2A. Disconnect all test equipment and replace the right side panel on the Type 647A.

NOTES

ABBREVIATIONS AND SYMBOLS

A or amp	amperes
AC or ac	alternating current
AF	audio frequency
α	alpha—common-base current amplification factor
AM	amplitude modulation
$\approx$	approximately equal to
β	beta—common-emitter current amplification factor
BHB	binding head brass
BHS	binding head steel
BNC	baby series "N" connector
$\times$	by or times
C	carbon
C	capacitance
cap.	capacitor
cer	ceramic
cm	centimeter
comp	composition
conn	connector
$\sim$	cycle
c/s or cps	cycles per second
CRT	cathode-ray tube
csk	countersunk
Δ	increment
dB	decibel
dBm	decibel referred to one milliwatt
DC or dc	direct current
DE	double end
$^\circ$	degrees
$^\circ$C	degrees Celsius (degrees centigrade)
$^\circ$F	degrees Fahrenheit
$^\circ$K	degrees Kelvin
dia	diameter
$\div$	divide by
div	division
EHF	extremely high frequency
elect.	electrolytic
EMC	electrolytic, metal cased
EMI	electromagnetic interference (see RFI)
EMT	electrolytic, metal tubular
ε	epsilon—2.71828 or % of error
$\geq$	equal to or greater than
$\leq$	equal to or less than
ext	external
F or f	farad
F & I	focus and intensity
FHB	flat head brass
FHS	flat head steel
Fil HB	fillister head brass
Fil HS	fillister head steel
FM	frequency modulation
ft	feet or foot
G	giga or 10^9
g	acceleration due to gravity
Ge	germanium
GHz	gigahertz
GMV	guaranteed minimum value
GR	General Radio
$>$	greater than
H or h	henry
h	height or high
hex.	hexagonal
HF	high frequency
HHB	hex head brass
HHS	hex head steel
HSB	hex socket brass
HSS	hex socket steel
HV	high voltage
Hz	hertz (cycles per second)
ID	inside diameter
IF	intermediate frequency
in.	inch or inches
incd	incandescent
∞	infinity
int	internal
$\int$	integral
k	kilohms or kilo (10^3)
k Ω	kilohm
kc	kilocycle
kHz	kilohertz
L	inductance
λ	lambda—wavelength
$\gg$	large compared with
$<$	less than
LF	low frequency
lg	length or long
LV	low voltage
M	mega or 10^6
m	milli or 10^{-3}
MΩ or meg	megohm
μ	micro or 10^{-6}
mc	megacycle
met.	metal
MHz	megahertz
mm	millimeter
ms	millisecond
$-$	minus
mtg hdw	mounting hardware
n	nano or 10^{-9}
no. or #	number
ns	nanosecond
OD	outside diameter
OHB	oval head brass
OHS	oval head steel
Ω	omega—ohms
ω	omega—angular frequency
p	pico or 10^{-12}
/	per
%	percent
PHB	pan head brass
ϕ	phi—phase angle
π	pi—3.1416
PHS	pan head steel
$+$	plus
$\pm$	plus or minus
PIV	peak inverse voltage
plstc	plastic
PMC	paper, metal cased
poly	polystyrene
prec	precision
PT	paper, tubular
PTM	paper or plastic, tubular, molded
pwr	power
Q	figure of merit
RC	resistance capacitance
RF	radio frequency
RFI	radio frequency interference (see EMI)
RHB	round head brass
ρ	rho—resistivity
RHS	round head steel
r/min or rpm	revolutions per minute
RMS	root mean square
s or sec.	second
SE	single end
Si	silicon
SN or S/N	serial number
$\ll$	small compared with
T	tera or 10^{12}
TC	temperature compensated
TD	tunnel diode
THB	truss head brass
θ	theta—angular phase displacement
thk	thick
THS	truss head steel
tub.	tubular
UHF	ultra high frequency
V	volt
VAC	volts, alternating current
var	variable
VDC	volts, direct current
VHF	very high frequency
VSWR	voltage standing wave ratio
W	watt
w	wide or width
w/	with
w/o	without
WW	wire-wound
xmfr	transformer

PARTS ORDERING INFORMATION

Replacement parts are available from or through your local Tektronix, Inc. Field Office or representative.

Changes to Tektronix instruments are sometimes made to accommodate improved components as they become available, and to give you the benefit of the latest circuit improvements developed in our engineering department. It is therefore important, when ordering parts, to include the following information in your order: Part number, instrument type or number, serial or model number, and modification number if applicable.

If a part you have ordered has been replaced with a new or improved part, your local Tektronix, Inc. Field Office or representative will contact you concerning any change in part number.

SPECIAL NOTES AND SYMBOLS

×000	Part first added at this serial number
00×	Part removed after this serial number
*000-0000-00	Asterisk preceding Tektronix Part Number indicates manufactured by or for Tektronix, Inc., or reworked or checked components.
Use 000-0000-00	Part number indicated is direct replacement.
◐	Screwdriver adjustment.
▭	Control, adjustment or connector.

SECTION 7

ELECTRICAL PARTS LIST

Values are fixed unless marked Variable.

Ckt. No.	Tektronix Part No.	Serial/Model No. Eff	Disc	Description			
				Bulbs			
B160X	150-0030-00			Neon, NE-2V			
B186[1]	260-0518-00			Neon, NE-2V			
B200	150-0030-00			Neon, NE-2V			
B330	150-0030-00			Neon, NE-2V			
				Capacitors			
Tolerance ±20% unless otherwise indicated.							
C12	283-0080-00			0.022 μF	Cer	25 V	+80%—20%
C14	283-0080-00			0.022 μF	Cer	25 V	+80%—20%
C15	281-0516-00	B010100	B039999	39 pF	Cer	500 V	10%
C15	281-0558-00	B040000		18 pF	Cer	500 V	
C21	281-0518-00			47 pF	Cer	500 V	
C23	283-0078-00	B010100	B019999	0.001 μF	Cer	500 V	
C23	283-0080-00	B020000		0.022 μF	Cer	25 V	+80%—20%
C25	283-0080-00			0.022 μF	Cer	25 V	+80%—20%
C26	283-0080-00			0.022 μF	Cer	25 V	+80%—20%
C29	281-0609-00			1 pF	Cer	200 V	10%
C30A	283-0068-00			0.01 μF	Cer	500 V	
C30B	281-0523-00			100 pF	Cer	350 V	
C30C	281-0525-00			470 pF	Cer	500 V	
C32	283-0079-00			0.01 μF	Cer	250 V	
C34	283-0000-00			0.001 μF	Cer	500 V	
C40	283-0080-00			0.022 μF	Cer	25 V	+80%—20%
C43	283-0080-00			0.022 μF	Cer	25 V	+80%—20%
C44C	283-0078-00			0.001 μF	Cer	500 V	
C44D	283-0078-00			0.001 μF	Cer	500 V	
C46	283-0080-00			0.022 μF	Cer	25 V	+80%—20%
C53	281-0603-00			39 pF	Cer	500 V	5%
C54	281-0525-00			470 pF	Cer	500 V	
C63	281-0528-00			82 pF	Cer	500 V	10%
C70A	283-0068-00			0.01 μF	Cer	500 V	
C70C	281-0525-00			470 pF	Cer	500 V	
C72	283-0079-00			0.01 μF	Cer	250 V	

[1]Furnished as a unit with SW201.

Capacitors *(cont)*

Ckt. No.	Tektronix Part No.	Serial/Model No. Eff	Disc	Description			
C74	283-0000-00			0.001 μF	Cer	500 V	
C75A	283-0078-00			0.001 μF	Cer	500 V	
C76	283-0079-00			0.01 μF	Cer	250 V	
C80	283-0080-00			0.022 μF	Cer	25 V	+80%—20%
C83	283-0080-00			0.022 μF	Cer	25 V	+80%—20%
C84C	283-0078-00			0.001 μF	Cer	500 V	
C84D	283-0078-00			0.001 μF	Cer	500 V	
C86	283-0080-00			0.022 μF	Cer	25 V	+80%—20%
C93	281-0540-00			51 pF	Cer	500 V	5%
C94	281-0525-00			470 pF	Cer	500 V	
C102	281-0543-00			270 pF	Cer	500 V	10%
C104	283-0078-00			0.001 μF	Cer	500 V	
C109	283-0080-00			0.022 μF	Cer	25 V	+80%—20%
C114	290-0189-00			33 μF	Elect.	35 V	10%
C122	281-0525-00			470 pF	Cer	500 V	
C127	281-0542-00			18 pF	Cer	500 V	10%
C130	281-0518-00			47 pF	Cer	500 V	
C132	283-0081-00			0.1 μF	Cer	25 V	+80%—20%
C136	281-0516-00			39 pF	Cer	500 V	10%
C153	290-0139-00			180 μF	Elect.	6 V	
C156	281-0523-00			100 pF	Cer	350 V	
C160A	281-0010-00			4.5-25 pF, Var	Cer		
C160B	283-0097-00			84 pF	Cer	1000 V	2%
C160C	281-0010-00			4.5-25 pF, Var	Cer		
C160D	283-0097-00			84 pF	Cer	1000 V	2%
C160F				0.001 μF			
C160G				0.01 μF			
C160H	*295-0082-00			0.1 μF	Timing Series		
C160J				1 μF			
C160K				10 μF			
C160R	281-0525-00			470 pF	Cer	500 V	
C162	283-0079-00			0.01 μF	Cer	250 V	
C165	281-0577-00			14 pF	Cer	500 V	5%
C169	283-0078-00			0.001 μF	Cer	500 V	
C170	290-0135-00			15 μF	Elect.	20 V	
C171	283-0079-00			0.01 μF	Cer	250 V	
C180D	281-0525-00			470 pF	Cer	500 V	
C180F	281-0536-00			0.001 μF	Cer	500 V	10%
C180G	285-0598-00			0.01 μF	PTM	100 V	5%
C180H	290-0188-00			0.1 μF	Elect.	35 V	10%
C180J	290-0183-00			1 μF	Elect.	35 V	10%
C180K	290-0167-00			10 μF	Elect.	15 V	
C186	285-0629-00			0.047 μF	PTM	100 V	
C191	283-0080-00			0.022 μF	Cer	25 V	+80%—20%

Capacitors *(cont)*

Ckt. No.	Tektronix Part No.	Serial/Model No. Eff	Disc	Description			
C198	281-0549-00			68 pF	Cer	500 V	10%
C199	281-0523-00			100 pF	Cer	350 V	
C200	285-0622-00			0.1 μF	PTM	100 V	
C201	281-0543-00			270 pF	Cer	500 V	10%
C202	281-0524-00			150 pF	Cer	500 V	
C203	281-0525-00			470 pF	Cer	500 V	
C204	281-0543-00			270 pF	Cer	500 V	10%
C207	283-0079-00			0.01 μF	Cer	250 V	
C210	290-0137-00			100 μF	Elect.	30 V	+75%—15%
C213	283-0080-00			0.022 μF	Cer	25 V	+80%—20%
C222	281-0525-00			470 pF	Cer	500 V	
C227	281-0542-00			18 pF	Cer	500 V	10%
C228	281-0523-00			100 pF	Cer	500 V	
C230	281-0518-00			47 pF	Cer	500 V	10%
C232	283-0081-00			0.1 μF	Cer	25 V	+80%—20%
C253	283-0080-00			0.022 μF	Cer	25 V	+80%—20%
C256	281-0523-00			100 pF	Cer	350 V	
C260A	281-0010-00			4.5-25 pF, Var	Cer		
C260B	283-0097-00			84 pF	Cer	1000 V	2%
C260C	281-0010-00			4.5-25 pF, Var			
C260D	283-0097-00			84 pF	Cer	1000 V	2%
C260F				0.001 μF			
C260G				0.01 μF			
C260H	*295-0082-00			0.1 μF	Timing Series		
C260J				1 μF			
C260K				10 μF			
C260R	281-0525-00			470 pF	Cer	500 V	
C262	283-0079-00			0.01 μF	Cer	250 V	
C265	281-0577-00			14 pF	Cer	500 V	5%
C270	283-0081-00			0.1 μF	Cer	25 V	+80%—20%
C271	283-0081-00			0.1 μF	Cer	25 V	+80%—20%
C291	283-0080-00			0.022 μF	Cer	25 V	+80%—20%
C310	283-0081-00			0.1 μF	Cer	25 V	+80%—20%
C320	283-0080-00			0.022 μF	Cer	25 V	+80%—20%
C340	283-0081-00			0.1 μF	Cer	25 V	+80%—20%
C409	283-0079-00			0.01 μF	Cer	250 V	
C410	283-0080-00			0.022 μF	Cer	25 V	+80%—20%
C411	283-0080-00			0.022 μF	Cer	25 V	+80%—20%
C414	283-0079-00			0.01 μF	Cer	250 V	

Diodes

D30	*152-0185-00	Silicon	Replaceable by 1N3605
D31	*152-0185-00	Silicon	Replaceable by 1N3605
D33	*152-0185-00	Silicon	Replaceable by 1N3605

Diodes *(cont)*

Ckt. No.	Tektronix Part No.	Serial/Model No. Eff	Disc	Description
D44A	*152-0153-00			Silicon Replaceable by 1N4244
D44B	*152-0153-00			Silicon Replaceable by 1N4244
D44C	*152-0185-00			Silicon Replaceable by 1N3605
D44D	*152-0185-00			Silicon Replaceable by 1N3605
D45A	*152-0185-00			Silicon Replaceable by 1N3605
D45B	*152-0185-00			Silicon Replaceable by 1N3605
D55	*152-0125-00			Tunnel Selected TD3A 4.7 mA
D56	*152-0153-00			Silicon Replaceable by 1N4244
D57	*152-0153-00			Silicon Replaceable by 1N4244
D70	*152-0185-00			Silicon Replaceable by 1N3605
D71	*152-0185-00			Silicon Replaceable by 1N3605
D73	*152-0185-00			Silicon Replaceable by 1N3605
D74	*152-0185-00			Silicon Replaceable by 1N3605
D75	152-0139-00	B010100	B059999	Zener 1N751 0.4 W, 5.1 V, 10%
D75	152-0279-00	B060000		Zener 1N751A 0.4 W, 5.1 V, 5%
D84A	*152-0153-00			Silicon Replaceable by 1N4244
D84B	*152-0153-00			Silicon Replaceable by 1N4244
D84C	*152-0185-00			Silicon Replaceable by 1N3605
D84D	*152-0185-00			Silicon Replaceable by 1N3605
D85A	*152-0185-00			Silicon Replaceable by 1N3605
D85B	*152-0185-00			Silicon Replaceable by 1N3605
D95	*152-0125-00			Tunnel Selected TD3A 4.7 mA
D96	*152-0153-00			Silicon Replaceable by 1N4244
D102	152-0065-00			Silicon HD5000
D103	*152-0153-00			Silicon Replaceable by 1N4244
D104	152-0141-00			Silicon 1N3605
D105	*152-0125-00			Tunnel Selected TD3A 4.7 mA
D113	*152-0185-00			Silicon Replaceable by 1N3605
D114	*152-0185-00			Silicon Replaceable by 1N3605
D118	*152-0185-00			Silicon Replaceable by 1N3605
D120	*152-0153-00			Silicon Replaceable by 1N4244
D121	*152-0153-00			Silicon Replaceable by 1N4244
D125	*152-0125-00			Tunnel Selected TD3A 4.7 mA
D133	*152-0185-00			Silicon Replaceable by 1N3605
D155	*152-0185-00			Silicon Replaceable by 1N3605
D158	*152-0185-00			Silicon Replaceable by 1N3605
D159	*152-0161-00			GaAs diffused w/axial leads
D163	*152-0185-00			Silicon Replaceable by 1N3605
D180	*152-0185-00			Silicon Replaceable by 1N3605
D181	*152-0185-00			Silicon Replaceable by 1N3605
D183	*152-0185-00			Silicon Replaceable by 1N3605
D193	*152-0185-00			Silicon Replaceable by 1N3605
D200	*152-0185-00			Silicon Replaceable by 1N3605
D214A,B	*152-0151-00			Silicon Assembly
D219	*152-0185-00			Silicon Replaceable by 1N3605
D220	*152-0153-00			Silicon Replaceable by 1N4244

Diodes *(cont)*

Ckt. No.	Tektronix Part No.	Serial/Model No. Eff	Disc	Description	
D221	*152-0153-00			Silicon	Replaceable by 1N4244
D225	*152-0125-00			Tunnel	Selected TD3A 4.7 mA
D233	*152-0185-00			Silicon	Replaceable by 1N3605
D255	*152-0185-00			Silicon	Replaceable by 1N3605
D258	*152-0185-00			Silicon	Replaceable by 1N3605
D259	*152-0161-00			GaAs	diffused w/axial leads
D263	*152-0185-00			Silicon	Replaceable by 1N3605
D273	*152-0185-00			Silicon	Replaceable by 1N3605
D293	*152-0185-00			Silicon	Replaceable by 1N3605
D321	*152-0185-00			Silicon	Replaceable by 1N3605
D340	152-0123-00			Zener	1N935A 0.4 W, 9.1 V, 5%, TC
D341	152-0123-00			Zener	1N935A 0.4 W, 9.1 V, 5%, TC
D342	152-0034-00	B010100	B059999	Zener	1N753 0.4 W, 6.2 V, 10%
D342	152-0280-00	B060000		Zener	1N753A 0.4 W, 6.2 V, 5%
D346	*152-0185-00			Silicon	Replaceable by 1N3605
D407	152-0123-00			Zener	1N935A 0.4 W, 9.1 V, 5%, TC

Inductors

L14	276-0507-00			Core, Ferramic Suppressor	
L23	276-0507-00	XB040000		Core, Ferramic Suppressor	
L26	276-0507-00	XB040000		Core, Ferramic Suppressor	
L43A	276-0507-00			Core, Ferramic Suppressor	
L45	*108-0112-00			0.3 μH	
L83A	276-0507-00			Core, Ferramic Suppressor	
L85	*108-0181-00			0.2 μH	
L125	*108-0147-00			2.2 μH	
L154	276-0528-00	XB030000		Core, Ferramic Suppressor	
L191	276-0507-00	XB040000		Core, Ferramic Suppressor	
L320	276-0507-00			Core, Ferramic Suppressor	
L324	276-0541-00	XB050000		Core, Ferrite	
L344	276-0541-00	XB050000		Core, Ferrite	

Transistors

Q14A	*151-0127-00	B010100	B019999	Silicon	Selected from 2N2369
Q14A	151-0225-00	B020000		Silicon	2N3563
Q14B	*151-0127-00	B010100	B019999	Silicon	Selected from 2N2369
Q14B	151-0225-00	B020000		Silicon	2N3563
Q23A	*151-0127-00	B010100	B019999	Silicon	Selected from 2N2369
Q23A	151-0225-00	B020000		Silicon	2N3563
Q23B	151-0220-00			Silicon	2N4122
Q43	151-0220-00			Silicon	2N4122
Q44A	151-0223-00			Silicon	2N4275
Q44B	151-0223-00			Silicon	2N4275
Q54	151-0220-00			Silicon	2N4122
Q64	151-0220-00	B010100	B019999	Silicon	2N4122
Q64	151-0131-00	B020000		Germanium	2N964
Q83	151-0220-00			Silicon	2N4122
Q84A	151-0223-00			Silicon	2N4275
Q84B	151-0223-00			Silicon	2N4275
Q94	151-0220-00	B010100	B02999	Silicon	2N4122
Q94	151-0131-00	B030000		Germanium	2N964
Q114	*151-0103-00			Silicon	Replaceable by 2N2219
Q124	*151-0108-00			Silicon	Replaceable by 2N2501
Q134A	*151-0108-00			Silicon	Replaceable by 2N2501
Q134B	*151-0108-00			Silicon	Replaceable by 2N2501

Transistors *(cont)*

Ckt. No.	Tektronix Part No.	Serial/Model No. Eff	Disc	Description
Q154	151-0107-00			Germanium 2N967
Q164	*151-0127-00			Silicon Selected from 2N2369
Q173A	*151-0108-00			Silicon Replaceable by 2N2501
Q173B	*151-0103-00			Silicon Replaceable by 2N2219
Q183	*151-0087-00			Silicon Replaceable by 2N1131
Q184	*151-0096-00			Silicon Selected from 2N1893
Q195A	*151-0133-00			Silicon Selected from 2N3251
Q195B	*151-0133-00			Silicon Selected from 2N3251
Q204	*151-0103-00			Silicon Replaceable by 2N2219
Q214	*151-0104-00			Silicon Replaceable by 2N2913
Q219	*151-0133-00			Silicon Selected from 2N3251
Q224	*151-0108-00			Silicon Replaceable by 2N2501
Q234	*151-0108-00			Silicon Replaceable by 2N2501
Q254	151-0107-00			Germanium 2N967
Q264	*151-0127-00			Silicon Selected from 2N2369
Q273	*151-0103-00			Silicon Replaceable by 2N2219
Q295A	*151-0133-00			Silicon Selected from 2N3251
Q295B	*151-0133-00			Silicon Selected from 2N3251
Q313	*151-0103-00			Silicon Replaceable by 2N2219
Q324	*151-0108-00			Silicon Replaceable by 2N2501
Q343	*151-0103-00			Silicon Replaceable by 2N2219
Q344	*151-0108-00			Silicon Replaceable by 2N2501

Resistors

Resistors are fixed, composition, ±10% unless otherwise indicated.

R7	311-0326-00			10 kΩ, Var			
R9	316-0392-00			3.9 kΩ	¼ W		
R10	315-0101-00			100 Ω	¼ W		5%
R11	315-0101-00			100 Ω	¼ W		5%
R12	316-0330-00			33 Ω	¼ W		
R13	323-0161-00			464 Ω	½ W	Prec	1%
R14	302-0391-00			390 Ω	½ W		
R15	321-0101-00			110 Ω	⅛ W	Prec	1%
R16	323-0191-00			953 Ω	½ W	Prec	1%
R17	323-0191-00			953 Ω	½ W	Prec	1%
R20	303-0153-00			15 kΩ	1 W		5%
R21	321-0225-00			2.15 kΩ	⅛ W	Prec	1%
R22	323-0313-00			17.8 kΩ	½ W	Prec	1%
R23	316-0102-00	B010100	B019999	1 kΩ	¼ W		
R23	315-0751-00	B020000		750 Ω	¼ W		5%
R24	316-0472-00			4.7 kΩ	¼ W		
R25	316-0472-00			4.7 kΩ	¼ W		
R26	316-0102-00			1 kΩ	¼ W		
R27A	315-0910-00			91 Ω	¼ W		5%
R27B	315-0910-00			91 Ω	¼ W		5%

Resistors *(cont)*

Ckt. No.	Tektronix Part No.	Serial/Model No. Eff	Disc	Description			
R28	302-0100-00			10 Ω	½ W		
R29	301-0915-00			9.1 MΩ	½ W		5%
R30A	301-0105-00			1 MΩ	½ W		5%
R30B	316-0104-00			100 kΩ	¼ W		
R30C	302-0105-00			1 MΩ	½ W		
R30D	316-0470-00			47 Ω	¼ W		
R31	316-0470-00			47 Ω	¼ W		
R32	316-0471-00			470 Ω	¼ W		
R33	305-0912-00			9.1 kΩ	2 W		5%
R34	315-0910-00			91 Ω	¼ W		5%
R38	316-0101-00			100 Ω	¼ W		
R39	316-0101-00			100 Ω	¼ W		
R40	315-0102-00			1 kΩ	¼ W		5%
R41[2]	311-0272-00			5 kΩ, Var			
R42A	315-0822-00			8.2 kΩ	¼ W		5%
R42B	315-0821-00			820 Ω	¼ W		5%
R43	316-0683-00			68 kΩ	¼ W		
R44	305-0682-00			6.8 kΩ	2 W		5%
R45	321-0076-00			60.4 Ω	⅛ W	Prec	1%
R46	316-0470-00			47 Ω	¼ W		
R47	316-0100-00			10 Ω	¼ W		
R48	315-0101-00	B010100	B019999	100 Ω	¼ W		5%
R48	315-0431-00	B020000	B029999	430 Ω	¼ W		5%
R48	315-0221-00	B030000		220 Ω	¼ W		5%
R52	316-0101-00			100 Ω	¼ W		
R53	323-0321-00			21.5 kΩ	½ W	Prec	1%
R54	315-0222-00			2.2 kΩ	¼ W		5%
R55	321-0245-00			3.48 kΩ	⅛ W	Prec	1%
R61	316-0470-00			47 Ω	¼ W		
R63	301-0223-00			22 kΩ	½ W		5%
R64	315-0242-00			2.4 kΩ	¼ W		5%
R70A	302-0100-00			10 Ω	½ W		
R70B	301-0105-00			1 MΩ	½ W		5%
R70C	302-0105-00			1 MΩ	½ W		
R71	316-0470-00			47 Ω	¼ W		
R72	316-0471-00			470 Ω	¼ W		
R73	305-0512-00			5.1 kΩ	2 W		5%
R74	315-0910-00			91 Ω	¼ W		5%
R75A	302-0472-00			4.7 kΩ	½ W		
R75C	302-0472-00			4.7 kΩ	½ W		
R75D	316-0104-00			100 kΩ	¼ W		
R75E	301-0362-00			3.6 kΩ	½ W		5%
R75F	316-0104-00			100 kΩ	¼ W		
R76	303-0103-00			10 kΩ	1 W		5%
R78	316-0470-00			47 Ω	¼ W		
R79	316-0101-00			100 Ω	¼ W		

[2]Furnished as a unit with R181.

Resistors *(cont)*

Ckt. No.	Tektronix Part No.	Serial/Model No. Eff	Disc	Description			
R80	315-0621-00			620 Ω	¼ W		5%
R81	311-0117-00			5 kΩ, Var			
R82A	315-0273-00			27 kΩ	¼ W		5%
R82B	315-0332-00			3.3 kΩ	¼ W		5%
R82C	315-0332-00			3.3 kΩ	¼ W		5%
R83	316-0683-00			68 kΩ	¼ W		
R84	301-0183-00			18 kΩ	½ W		5%
R85	315-0560-00			56 Ω	¼ W		5%
R86	316-0470-00			47 Ω	¼ W		
R87	316-0100-00			10 Ω	¼ W		
R88	315-0101-00			100 Ω	¼ W		5%
R89	315-0271-00			270 Ω	¼ W		5%
R90	321-0254-00			4.32 kΩ	⅛ W	Prec	1%
R93	323-0321-00			21.5 kΩ	½ W	Prec	1%
R94	315-0222-00			2.2 kΩ	¼ W		5%
R95	321-0245-00			3.48 kΩ	⅛ W	Prec	1%
R96	316-0470-00			47 Ω	¼ W		
R104	316-0471-00			470 Ω	¼ W		
R105	301-0112-00			1.1 kΩ	½ W		5%
R106	323-0281-00			8.25 kΩ	½ W	Prec	1%
R109	316-0330-00			33 Ω	¼ W		
R110	321-0105-00			121 Ω	⅛ W	Prec	1%
R111	321-0303-00			14 kΩ	⅛ W	Prec	1%
R112	321-0229-00			2.37 kΩ	⅛ W	Prec	1%
R113	321-0271-00			6.49 kΩ	⅛ W	Prec	1%
R114	315-0471-00			470 Ω	¼ W		5%
R116	321-0245-00			3.48 kΩ	⅛ W	Prec	1%
R117	316-0392-00			3.9 kΩ	¼ W		
R118	321-0258-00			4.75 kΩ	⅛ W	Prec	1%
R120	321-0258-00			4.75 kΩ	⅛ W	Prec	1%
R122	315-0101-00			100 Ω	¼ W		5%
R123	321-0243-00			3.32 kΩ	⅛ W	Prec	1%
R124	301-0112-00			1.1 kΩ	½ W		5%
R125	316-0331-00			330 Ω	¼ W		
R127	315-0112-00			1.1 kΩ	¼ W		5%
R130	321-0250-00			3.92 kΩ	⅛ W	Prec	1%
R131	322-0341-00			34.8 kΩ	¼ W	Prec	1%
R132	316-0101-00			100 Ω	¼ W		
R133	315-0162-00			1.6 kΩ	¼ W		5%
R134	323-0171-00			590 Ω	½ W	Prec	1%

Resistors *(cont)*

Ckt. No.	Tektronix Part No.	Serial/Model No. Eff	Disc	Description			
R135	321-0173-00			619 Ω	1/8 W	Prec	1%
R136	316-0472-00			4.7 kΩ	1/4 W		
R138	315-0122-00			1.2 kΩ	1/4 W		5%
R139	315-0621-00			620 Ω	1/4 W		5%
R150	311-0405-00			10 kΩ, Var			
R151	315-0472-00			4.7 kΩ	1/4 W		5%
R152	323-0184-00			806 Ω	1/2 W	Prec	1%
R153	321-0131-00			226 Ω	1/8 W	Prec	1%
R154	315-0392-00			3.9 kΩ	1/4 W		5%
R155	315-0512-00			5.1 kΩ	1/4 W		5%
R156	316-0101-00			100 Ω	1/4 W		
R158	316-0101-00			100 Ω	1/4 W		
R160A	323-0654-00			75 kΩ	1/2 W	Prec	1%
R160B	323-0654-00			75 kΩ	1/2 W	Prec	1%
R160C	315-0392-00			3.9 kΩ	1/4 W		5%
R160D	323-0653-00			221 kΩ	1/2 W	Prec	1/2%
R160E	323-0657-00			750 kΩ	1/2 W	Prec	0.1%
R160F	323-0655-00			750 kΩ	1/2 W	Prec	1/2%
R160G	323-0655-00			750 kΩ	1/2 W	Prec	1/2%
R160H	323-0656-00			1.5 MΩ	1/2 W	Prec	1/2%
R160J	309-0440-00			3.74 MΩ	1/2 W	Prec	1%
R160K	309-0441-00			7.5 MΩ	1/2 W	Prec	1%
R160L	309-0442-00			22.6 MΩ	1/2 W	Prec	1%
R160R	316-0470-00			47 Ω	1/4 W		
R160T	316-0182-00			1.8 kΩ	1/4 W		
R160V[3]	311-0402-00			20 kΩ, Var			
R160W	311-0404-00			1 kΩ, Var			
R160X	316-0184-00			180 kΩ	1/4 W		
R160Y	316-0223-00			22 kΩ	1/4 W		
R160Z	316-0105-00			1 MΩ	1/4 W		
R161	316-0470-00			47 Ω	1/4 W		
R162	316-0221-00			220 Ω	1/4 W		
R163	315-0471-00			470 Ω	1/4 W		5%
R164	323-0315-00			18.7 kΩ	1/2 W	Prec	1%
R165	316-0220-00			22 Ω	1/4 W		
R168	304-0223-00			22 kΩ	1 W		
R170	316-0100-00			10 Ω	1/4 W		
R171	316-0470-00			47 Ω	1/4 W		
R172	316-0220-00			22 Ω	1/4 W		
R173	316-0220-00			22 Ω	1/4 W		
R174	301-0183-00			18 kΩ	1/2 W		5%

[3]Furnished as aunit with SW160V.

Resistors *(cont)*

Ckt. No.	Tektronix Part No.	Serial/Model No. Eff	Disc	Description			
R176	316-0470-00			47 Ω	¼ W		
R177	316-0471-00			470 Ω	¼ W		
R178	315-0751-00			750 Ω	¼ W		5%
R179	315-0333-00			33 kΩ	¼ W		5%
R180	315-0124-00			120 kΩ	¼ W		5%
R181[4]	311-0272-00			5 kΩ, Var			
R182	316-0153-00			15 kΩ	¼ W		
R183	302-0393-00			39 kΩ	½ W		
R184	322-0357-00			51.1 kΩ	¼ W	Prec	1%
R185	321-0225-00			2.15 kΩ	⅛ W	Prec	1%
R186	316-0225-00			2.2 MΩ	¼ W		
R187	316-0473-00			47 kΩ	¼ W		
R188	316-0473-00			47 kΩ	¼ W		
R189A	316-0564-00			560 kΩ	¼ W		
R189B	316-0333-00			33 kΩ	¼ W		
R190	321-0207-00			1.4 kΩ	⅛ W	Prec	1%
R191	321-0257-00			4.64 kΩ	⅛ W	Prec	1%
R193	321-0171-00			590 Ω	⅛ W	Prec	1%
R194	321-0189-00			909 Ω	⅛ W	Prec	1%
R195	324-0305-00			14.7 kΩ	1 W	Prec	1%
R196	315-0113-00			11 kΩ	¼ W		5%
R197	316-0221-00			220 Ω	¼ W		
R198	316-0101-00			100 Ω	¼ W		
R199	321-0225-00			2.15 kΩ	⅛ W	Prec	1%
R200	316-0104-00			100 kΩ	¼ W		
R201	316-0473-00			47 kΩ	¼ W		
R202	316-0223-00			22 kΩ	¼ W		
R203	316-0104-00			100 kΩ	¼ W		
R204	316-0102-00			1 kΩ	¼ W		
R207	316-0103-00			10 kΩ	¼ W		
R208	316-0104-00			100 kΩ	¼ W		
R210	322-0130-00			221 Ω	¼ W	Prec	1%
R211	311-0386-00			2 kΩ, Var			
R212	323-0639-00			1.1 kΩ	½ W	Prec	½%
R213	322-0124-00			191 Ω	¼ W	Prec	1%
R214	301-0625-00			6.2 MΩ	½ W		5%
R215	323-0333-00			28.7 kΩ	½ W	Prec	1%
R217	316-0473-00			47 kΩ	¼ W		
R218	316-0102-00			1 kΩ	¼ W		
R219	323-0302-00			13.7 kΩ	½ W	Prec	1%
R220	321-0258-00			4.75 kΩ	⅛ W	Prec	1%
R222	315-0101-00			100 Ω	¼ W		5%
R223	321-0243-00			3.32 kΩ	⅛ W	Prec	1%
R224	301-0112-00			1.1 kΩ	½ W		5%
R225	316-0470-00			47 Ω	¼ W		

[4]Furnished as a unit with R41.

Resistors *(cont)*

Ckt. No.	Tektronix Part No.	Serial/Model No. Eff	Disc	Description			
R227	315-0112-00			1.1 kΩ	¼ W		5%
R228	315-0101-00			100 Ω	¼ W		5%
R230	321-0250-00			3.92 kΩ	⅛ W	Prec	1%
R231	322-0341-00			34.8 kΩ	¼ W	Prec	1%
R232	316-0101-00			100 Ω	¼ W		
R233	315-0162-00			1.6 kΩ	¼ W		5%
R234	323-0171-00			590 Ω	½ W	Prec	1%
R235	321-0173-00			619 Ω	⅛ W	Prec	1%
R251	315-0682-00			6.8 kΩ	¼ W		5%
R252	321-0201-00			1.21 kΩ	⅛ W	Prec	1%
R253	321-0143-00			301 Ω	⅛ W	Prec	1%
R254	315-0472-00			4.7 kΩ	¼ W		5%
R255	315-0512-00			5.1 kΩ	¼ W		5%
R256	316-0101-00			100 Ω	¼ W		
R258	316-0101-00			100 Ω	¼ W		
R259	316-0220-00			22 Ω	¼ W		
R260A	323-0654-00			75 kΩ	½ W	Prec	½%
R260B	323-0654-00			75 kΩ	½ W	Prec	½%
R260C	315-0392-00			3.9 kΩ	¼ W		5%
R260D	323-0653-00			221 kΩ	½ W	Prec	½%
R260E	323-0657-00			750 kΩ	½W	Prec	0.1%
R260F	323-0655-00			750 kΩ	½W	Prec	½%
R260G	323-0655-00			750 kΩ	½W	Prec	½%
R260H	323-0656-00			1.5 MΩ	½ W	Prec	½%
R260J	309-0440-00			3.74 MΩ	½ W	Prec	1%
R260K	309-0441-00			7.5 MΩ	½ W	Prec	1%
R260L	309-0442-00			22.6 MΩ	½ W	Prec	1%
R260R	316-0470-00			47 Ω	¼ W		
R260T	316-0182-00			1.8 kΩ	¼ W		
R260V[5]	311-0402-00			20 kΩ, Var			
R260W	311-0328-00			1 kΩ, Var			
R260Y	316-0223-00			22 kΩ	¼ W		
R261	316-0470-00			47 Ω	¼ W		
R262	316-0221-00			220 Ω	¼ W		
R263	315-0471-00			470 Ω	¼ W		5%
R264	323-0315-00			18.7 kΩ	½ W	Prec	1%
R265	316-0220-00			22 Ω	¼ W		
R268	305-0752-00			7.5 kΩ	2 W		5%
R270	316-0101-00			100 Ω	¼ W		
R271	316-0100-00			10 Ω	¼ W		

[5]Furnished as a unit with SW260V.

Resistors *(cont)*

Ckt. No.	Tektronix Part No.	Serial/Model No. Eff	Disc	Description			
R274	315-0751-00			750 Ω	¼ W		5%
R275	315-0333-00			33 kΩ	¼ W		5%
R290	321-0207-00			1.4 kΩ	⅛ W	Prec	1%
R291	321-0257-00			4.64 kΩ	⅛ W	Prec	1%
R293	315-0123-00			12 kΩ	¼ W		5%
R294	321-0261-00			5.11 kΩ	⅛ W	Prec	1%
R296A	315-0113-00			11 kΩ	¼ W		5%
R296C	316-0222-00			2.2 kΩ	¼ W		
R296E	321-0245-00			3.48 kΩ	⅛ W	Prec	1%
R297	322-0349-00			42.2 kΩ	¼ W	Prec	1%
R298	321-0257-00			4.64 kΩ	⅛ W	Prec	1%
R306	315-0752-00	XB040000		7.5 kΩ	¼ W		5%
R307	316-0333-00			33 kΩ	¼ W		
R308	321-0193-00			1 kΩ	⅛ W	Prec	1%
R310	323-0321-00			21.5 kΩ	½ W	Prec	1%
R311	316-0183-00			18 kΩ	¼ W		
R313	302-0223-00			22 kΩ	½ W		
R321	316-0184-00			180 kΩ	¼ W		
R323	321-0291-00			10.5 kΩ	⅛ W	Prec	1%
R324	323-0324-00			23.2 kΩ	½ W	Prec	1%
R330	316-0104-00			100 kΩ	¼ W		
R331	311-0095-00			500 Ω, Var			
R332	321-0231-00			2.49 kΩ	⅛ W	Prec	1%
R333	321-0097-00			100 Ω	⅛ W	Prec	1%
R334	311-0169-00			100 Ω, Var			
R335	322-0133-00			237 Ω	¼ W	Prec	1%
R337	324-0289-00			10 kΩ	1 W	Prec	1%
R338	324-0289-00			10 kΩ	1 W	Prec	1%
R339	311-0328-00			1 kΩ, Var			
R340	322-0357-00			51.1 kΩ	¼ W	Prec	1%
R341	316-0471-00			470 Ω	¼ W		
R342	321-0247-00			3.65 kΩ	⅛ W	Prec	1%
R343	304-0822-00			8.2 kΩ	1 W		
R344	323-0324-00			23.2 kΩ	½ W	Prec	1%
R345	321-0291-00			10.5 kΩ	⅛ W	Prec	1%
R346	316-0184-00			180 kΩ	¼ W		
R407	305-0202-00			2 kΩ	2 W		5%
R409	307-0103-00			2.7 Ω	¼ W		5%
R410	303-0200-00			20 Ω	1 W		5%
R411	303-0200-00			20 Ω	1 W		5%
R414	307-0103-00			2.7 Ω	¼ W		5%
R420	321-0239-00			3.01 kΩ	⅛ W	Prec	1%
R421	315-0181-00			180 Ω	¼ W		5%
R422	321-0273-00			6.81 kΩ	⅛ W	Prec	1%
R423	316-0273-00			27 kΩ	¼ W		
R426	315-0303-00			30 kΩ	¼ W		5%

Resistors *(cont)*

Ckt. No.	Tektronix Part No.	Serial/Model No. Eff	Disc	Description			
R427	315-0683-00			68 kΩ	¼ W		5%
R428	321-0237-00			2.87 kΩ	⅛ W	Prec	1%
R429	321-0271-00			6.49 kΩ	⅛ W	Prec	1%

Switches

	Wired or Unwired					
SW30A		260-0546-00		Lever	SOURCE	
SW30B		260-0519-00		Lever	COUPLING	
SW30C		260-0472-00		Lever	SLOPE	
SW70A		260-0640-00		Lever	SOURCE	
SW70B		260-0472-00		Lever	COUPLING	
SW70C		260-0472-00		Lever	SLOPE	
SW116		260-0545-00		Rotary	TRIG MODE	
SW160A,B	Wired	*262-0657-00		Rotary	TIME/CM	
SW160A,B		260-0543-00		Rotary	TIME/CM	
SW160V[6]		311-0402-00				
SW201[7]		260-0518-00		Push	RESET	
SW260V[8]		311-0402-00				
SW300A } SW300B }	Wired	*262-0568-00		Rotary		HORIZ DISPLAY MAG
SW300A } SW300B }		260-0544-00		Rotary		HORIZ DISPLAY MAG

Electron Tubes

V23	*154-0306-02		7586, aged	
V73	*154-0306-02		7586, aged	
V161	*154-0306-02		7586, aged	
V261	*154-0306-02		7586, aged	

[6]Furnished as a unit with R160V.

[7]Furnished as a unit with B186.

[8]Furnished as a unit with R260V.

FIGURE AND INDEX NUMBERS

Items in this section are referenced by figure and index numbers to the illustrations which appear on the pullout pages immediately following the Diagrams section of this instruction manual.

INDENTATION SYSTEM

This mechanical parts list is indented to indicate item relationships. Following is an example of the indentation system used in the Description column.

Assembly and/or Component
  Detail Part of Assembly and/or Component
  mounting hardware for Detail Part
    Parts of Detail Part
    mounting hardware for Parts of Detail Part
mounting hardware for Assembly and/or Component

Mounting hardware always appears in the same indentation as the item it mounts, while the detail parts are indented to the right. Indented items are part of, and included with, the next higher indentation.

Mounting hardware must be purchased separately, unless otherwise specified.

PARTS ORDERING INFORMATION

Replacement parts are available from or through your local Tektronix, Inc. Field Office or representative.

Changes to Tektronix instruments are sometimes made to accommodate improved components as they become available, and to give you the benefit of the latest circuit improvements developed in our engineering department. It is therefore important, when ordering parts, to include the following information in your order: Part number, instrument type or number, serial or model number, and modification number if applicable.

If a part you have ordered has been replaced with a new or improved part, your local Tektronix, Inc. Field Office or representative will contact you concerning any change in part number.

Change information, if any, is located at the rear of this manual.

ABBREVIATIONS AND SYMBOLS

For an explanation of the abbreviations and symbols used in this section, please refer to the page immediately preceding the Electrical Parts List in this instruction manual.

INDEX OF MECHANICAL PARTS LIST ILLUSTRATIONS

(Located behind diagrams)

FIG. 1 FRONT

FIG. 2 REAR

Ⓐ

SECTION 8

MECHANICAL PARTS LIST

FIG. 1 FRONT

Fig. & Index No.	Tektronix Part No.	Serial/Model No. Eff	Disc	Qty	Description 1 2 3 4 5
1-1	366-0220-00			1	KNOB, charcoal—TRIG LEVEL
	- - - - - -			-	knob includes:
	213-0020-00			1	SCREW, set, 6-32 x 1/8 inch, HSS
-2	- - - - - -			1	RESISTOR, variable
	- - - - - -			-	mounting hardware: (not included w/resistor)
	210-0012-00			1	LOCKWASHER, internal, 3/8 ID x 1/2 inch OD
-3	210-0978-00			1	WASHER, flat, 3/8 ID x 1/2 inch OD
-4	210-0413-00			1	NUT, hex., 3/8-32 x 1/2 inch
-5	331-0139-00			1	DIAL—DELAY TIME MULT
-6	- - - - - -			1	RESISTOR, variable
-7	366-0255-00			1	KNOB, red—HF STABILITY
	- - - - - -			-	knob includes:
	213-0020-00			1	SCREW, set, 6-32 x 1/8 inch, HSS
-8	366-0249-00			1	KNOB, charcoal—TRIG LEVEL
	- - - - - -			-	knob includes:
	213-0004-00			1	SCREW, set, 6-32 x 3/16 inch, HSS
-9	- - - - - -			1	RESISTOR, variable
	- - - - - -			-	mounting hardware: (not included w/resistor)
	210-0012-00			1	LOCKWASHER, internal, 3/8 ID x 1/2 inch OD
-10	210-0840-00			1	WASHER, flat, 0.390 ID x 9/16 inch OD
-11	210-0413-00			1	NUT, hex., 3/8-32 x 1/2 inch
-12	366-0220-00			1	KNOB, charcoal—TRIG MODE
	- - - - - -			-	knob includes:
	213-0020-00			1	SCREW, set, 6-32 x 1/8 inch, HSS
-13	260-0545-00			1	SWITCH, unwired—TRIG MODE
	- - - - - -			-	mounting hardware: (not included w/switch)
	210-0012-00			1	LOCKWASHER, internal, 3/8 ID x 1/2 inch OD
-14	210-0413-00			1	NUT, hex., 3/8-32 x 1/2 inch
-15	366-0189-00			1	KNOB, red—MAG
	- - - - - -			-	knob includes:
	213-0020-00			1	SCREW, set, 6-32 x 1/8 inch, HSS
-16	366-0322-00			1	KNOB, charcoal—HORIZ DISPLAY
	- - - - - -			-	knob includes:
	213-0004-00			1	SCREW, set, 6-32 x 3/16 inch, HSS

FIG. 1 FRONT *(cont)*

Fig. & Index No.	Tektronix Part No.	Serial/Model No. Eff	Disc	Qty	Description 1 2 3 4 5
1-17	262-0568-00			1	SWITCH, wired—HORIZ DISPLAY
	- - - - - -			-	switch includes:
	260-0544-00			1	SWITCH, unwired
-18	348-0002-00			1	GROMMET, rubber, 1/4 inch diameter
-19	407-0111-00			1	BRACKET, switch
-20	211-0008-00			2	SCREW, 4-40 x 1/4 inch, PHS
-21	385-0109-00			2	ROD, plastic
	- - - - - -			-	mounting hardware: (not included w/switch)
-22	211-0007-00			2	SCREW, 4-40 x 3/16 inch, PHS
-23	210-0013-00			1	LOCKWASHER, internal, 3/8 ID x 11/16 inch OD
-24	210-0413-00			2	NUT, hex., 3/8-32 x 1/2 inch
-25	210-0840-00			1	WASHER, flat, 0.390 ID x 9/16 inch OD
-26	358-0029-00			1	BUSHING, hex., 3/8-32 x 11/32 inch
-27	366-0232-00			1	KNOB, red—B
	- - - - - -			-	knob includes:
	213-0020-00			1	SCREW, set, 6-32 x 1/8 inch, HSS
-28	366-0222-00			1	KNOB, red—VARIABLE A
	- - - - - -			-	knob includes:
	213-0004-00			1	SCREW, set, 6-32 x 3/16 inch, HSS
-29	366-0194-00			1	KNOB, charcoal—TIME/CM AND DELAY TIME
	- - - - - -			-	knob includes:
	213-0022-00			1	SCREW, set, 4-40 x 3/16 inch, HSS
-30	331-0092-00			1	DIAL, window
-31	262-0657-00			1	SWITCH, wired—TIME/CM AND DELAY TIME
	- - - - - -			-	switch includes:
	260-0543-00			1	SWITCH, unwired
-32	179-0757-00			1	CABLE HARNESS
-33	- - - - - -			1	RESISTOR, variable
	- - - - - -			-	mounting hardware: (not included w/resistor)
-34	210-0012-00			1	LOCKWASHER, internal, 3/8 ID x 1/2 inch OD
-35	210-0840-00			2	WASHER, flat, 0.390 ID x 9/16 inch OD
-36	210-0413-00			1	NUT, hex., 3/8-32 x 1/2 inch
-37	426-0289-00			1	MOUNT, plastic
-38	211-0097-00			2	SCREW, 4-40 x 5/16 inch, PHS
-39	210-0004-00			4	LOCKWASHER, internal, #4
-40	210-0406-00			2	NUT, hex., 4-40 x 3/16 inch
-41	387-0986-01			1	PLATE, switch
-42	376-0032-00			1	COUPLING, 1/2 inch long
	- - - - - -			-	coupling includes:
	213-0075-00			2	SCREW, set, 4-40 x 3/32 inch, HSS
-43	210-0006-00			2	LOCKWASHER, internal, #6
-44	210-0449-00			2	NUT, hex., 5-40 x 1/4 inch
	- - - - - -			-	mounting hardware: (not included w/switch)
-45	210-0049-00			1	LOCKWASHER, internal, 3/8 inch ID
-46	210-0979-00			1	WASHER, flat, 0.630 ID x 15/16 inch OD
-47	210-0579-00			1	NUT, hex., 5/8-24 x 3/4 inch
-48	343-0117-00			1	CLAMP, switch
	- - - - - -			-	clamp includes:
	213-0004-00			1	SCREW, set, 6-32 x 3/16 inch, HSS
	- - - - - -			-	mounting hardware: (not included w/clamp)
	211-0008-00			2	SCREW, 4-40 x 1/4 inch, PHS

FIG. 1 FRONT *(cont)*

Fig. & Index No.	Tektronix Part No.	Serial/Model No. Eff	Disc	Qty	Description 1 2 3 4 5
1-49	406-0907-00			1	BRACKET, switch
	- - - - - -			-	mounting hardware: (not included w/bracket)
	211-0504-00			4	SCREW, 6-32 x 1/4 inch, PHS
-50	- - - - - -			2	CAPACITOR
	- - - - - -			-	mounting hardware for each: (not included w/capacitor)
	210-0048-00	XB030000		1	LOCKWASHER, internal, 5/16 ID x 0.425 inch OD
-51	210-0018-00			1	LOCKWASHER, internal, 5/16 inch ID
-52	210-0524-00			1	NUT, hex., 5/16-24 x 1/2 inch
-53	260-0518-00			1	SWITCH, push button, w/red indicator light—RESET
	- - - - - -			-	mounting hardware: (not included w/switch)
	210-0012-00			1	LOCKWASHER, internal, 3/8 ID x 1/2 inch OD
-54	210-0978-00			1	WASHER, flat, 3/8 ID x 1/2 inch OD
-55	210-0590-00			1	NUT, hex., 3/8-32 x 7/16 inch
-56	366-0215-01			1	KNOB, charcoal, lever—SOURCE B
-57	260-0640-00			1	SWITCH, lever—SOURCE B
	- - - - - -			-	mounting hardware: (not included w/switch)
-58	210-0004-00			2	LOCKWASHER, internal, #4
-59	210-0406-00			2	NUT, hex., 4-40 x 3/16 inch
-60	366-0215-01			1	KNOB, charcoal, lever—COUPLING B
-61	260-0472-00			1	SWITCH, lever—COUPLING B
	- - - - - -			-	mounting hardware: (not included w/switch)
	210-0004-00			2	LOCKWASHER, internal, #4
	210-0406-00			2	NUT, hex., 4-40 x 3/16 inch
	366-0215-01			1	KNOB, charcoal, lever—SLOPE A
-62	260-0472-00			1	SWITCH, lever—SLOPE B
	- - - - - -			-	mounting hardware: (not included w/switch)
	210-0004-00			2	LOCKWASHER, internal, #4
	210-0406-00			2	NUT, hex., 4-40 x 3/16 inch
	366-0215-01			1	KNOB, charcoal, lever—SLOPE A
-63	260-0472-00			1	SWITCH, lever—SLOPE A
	- - - - - -			-	mounting hardware: (not included w/switch)
	210-0004-00			2	LOCKWASHER, internal, #4
	210-0406-00			2	NUT, hex., 4-40 x 3/16 inch
-64	366-0215-01			1	KNOB, charcoal, lever—COUPLING A
-65	260-0519-00			1	SWITCH, lever—COUPLING A
	- - - - - -			-	mounting hardware: (not included w/switch)
	210-0004-00			2	LOCKWASHER, internal, #4
	210-0406-00			2	NUT, hex., 4-40 x 3/16 inch

FIG. 1 FRONT *(cont)*

Fig. & Index No.	Tektronix Part No.	Serial/Model No. Eff	Disc	Qty	Description 1 2 3 4 5
1-	366-0215-01			1	KNOB, charcoal, lever—SOURCE A
-66	260-0546-00			1	SWITCH, lever—SOURCE A
	- - - - - -			-	mounting hardware: (not included w/switch)
	210-0004-00			2	LOCKWASHER, internal, #4
	210-0406-00			2	NUT, hex., 4-40 x 3/16 inch
-67	343-0004-00			2	CLAMP, cable, plastic, 5/16 inch diameter
	- - - - - -			-	mounting hardware for each: (not included w/clamp)
-68	210-0863-00			1	WASHER, D shape, 0.191 ID x 33/64 w x 33/64 inch long
-69	210-0458-00			1	NUT, keps, 8-32 x 11/32 inch
-70	378-0541-00			2	FILTER, lens light
-71	352-0064-00			1	HOLDER, neon bulb, double
	- - - - - -			-	mounting hardware: (not included w/holder)
-72	211-0031-00			1	SCREW, 4-40 x 1 inch, 100° csk, FHS
-73	210-0406-00			2	NUT, hex., 4-40 x 3/16 inch
-74	131-0282-00			4	CONNECTOR, coaxial, 1 contact, w/mounting hardware
-75	131-0106-00			2	CONNECTOR, coaxial, 1 contact, BNC, w/mounting hardware
-76	333-1000-01			1	PANEL, front
-77	387-0778-00			1	PLATE, front sub-panel
-78	387-0779-00			1	PLATE, bulkhead
	- - - - - -			-	plate includes:
-79	211-0094-00			4	SCREW, 4-40 x 1/2 inch, PHS
-80	358-0215-00			1	BUSHING, plastic
-81	348-0050-00			1	GROMMET, plastic, 3/4 inch diameter
-82	131-0181-00			2	CONNECTOR, terminal, standoff
	358-0135-00			2	BUSHING, plastic
-83	384-0615-00			4	ROD, spacer
-84	406-0908-00			1	BRACKET, chassis latch
	- - - - - -			-	mounting hardware: (not included w/bracket)
-85	211-0504-00			2	SCREW, 6-32 x 1/4 inch, PHS

FIG. 2 REAR

Fig. & Index No.	Tektronix Part No.	Serial/Model No. Eff	Disc	Qty	Description 1 2 3 4 5
2-1	441-0486-00			1	CHASSIS, B TIME BASE
	- - - - - -			-	chassis includes:
-2	213-0112-00			2	THUMBSCREW, 6-32 x 0.812 inch
	354-0311-00	B010100	B030509X	2	RING, rubber, 0.078 inch ID
-3	214-0340-00			2	PIN, hinge
	- - - - - -			-	mounting hardware for each: (not included w/pin)
	210-0004-00			2	LOCKWASHER, internal, #4
-4	211-0016-00			2	SCREW, 4-40 x 5/16 inch, PHS
-5	358-0210-00			2	BUSHING, plastic
-6	210-0201-00			21	LUG, solder, SE #4
	- - - - - -			-	mounting hardware for each: (not included w/lug)
-7	213-0044-00			1	SCREW, 5-32 x 3/16 inch, PHS
-8	210-0259-00			9	LUG, solder, SE #2
	- - - - - -			-	mounting hardware for each: (not included w/lug)
-9	213-0055-00			1	SCREW, 2-32 x 3/16 inch, PHS
-10	210-0204-00			2	LUG, solder, DE #6
	- - - - - -			-	mounting hardware for each: (not included w/lug)
-11	213-0044-00			1	SCREW, 5-32 x 3/16 inch, PHS
-12	343-0089-00			2	CLAMP, cable, plastic, large
-13	343-0088-00			3	CLAMP, cable, plastic, small
-14	136-0181-00			38	SOCKET, transistor, 3 pin
	- - - - - -			-	mounting hardware for each: (not included w/socket)
-15	354-0234-00			1	RING, socket mounting
-16	136-0101-00			4	SOCKET, nuvistor, 5 pin
	- - - - - -			-	mounting hardware for each: (not included w/socket)
	213-0055-00			2	SCREW, 2-32 x 3/16 inch, PHS
-17	358-0215-00			2	BUSHING, plastic
-18	348-0050-00			4	GROMMET, plastic, 3/4 inch diameter
-19	136-0078-00			1	SOCKET, tube, 8 pin
	- - - - - -			-	mounting hardware: (not included w/socket)
	213-0055-00			2	SCREW, 2-32 x 3/16 inch, PHS
-20	- - - - - -			6	RESISTOR, variable
	- - - - - -			-	mounting hardware for each: (not included w/resistor)
-21	210-0046-00			1	LOCKWASHER, internal, 1/4 ID x 0.400 inch OD
-22	210-0583-00			1	NUT, hex., 1/4-32 x 5/16 inch

FIG. 2 REAR *(cont)*

Fig. & Index No.	Tektronix Part No.	Serial/Model No. Eff	Disc	Qty	Description 1 2 3 4 5
2-23	- - - - - -			1	RESISTOR, variable
	- - - - - -			-	mounting hardware: (not included w/resistor)
-24	210-0223-00			1	LUG, solder, 1/4 ID x 7/16 inch OD, SE
	210-0046-00			1	LOCKWASHER, internal, 1/4 ID x 0.400 inch OD
	210-0583-00			1	NUT, hex., 1/4-32 x 5/16 inch
-25	348-0031-00			1	GROMMET, plastic 3/32 inch diameter
-26	214-0506-00			1	PIN, connector
-27	214-0507-00			1	PIN, connector
-28	131-0371-00			1	CONNECTOR
-29	441-0488-00			1	CHASSIS, A TIME BASE
	- - - - - -			-	mounting hardware: (not included w/chassis)
-30	211-0504-00			4	SCREW, 6-32 x 1/4 inch, PHS
-31	441-0487-00			1	CHASSIS, Horizontal Amplifier
	- - - - - -			-	mounting hardware: (not included w/chassis)
	210-0457-00			3	NUT, keps, 6-32 x 5/16 inch
	211-0504-00			2	SCREW, 6-32 x 1/4 inch, PHS
-32	211-0538-00			1	SCREW, 6-32 x 5/16 inch, 100° csk, FHS
-33	406-0906-00			1	BRACKET, capacitor mounting
	- - - - - -			-	mounting hardware: (not included w/bracket)
-34	211-0504-00			2	SCREW, 6-32 x 1/4 inch, PHS
-35	- - - - - -			2	CAPACITOR
	- - - - - -			-	mounting hardware for each: (not included w/capacitor)
-36	210-0457-00			4	NUT, keps, 6-32 x 5/16 inch
-37	- - - - - -			2	CAPACITOR
	- - - - - -			-	mounting hardware for each: (not included w/capacitor)
-38	210-0018-00			1	LOCKWASHER, internal, 5/16 inch ID
-39	210-0524-00			1	NUT, hex., 5/16-24 x 1/2 inch
-40	406-0908-00			1	BRACKET, chassis latch
	- - - - - -			-	mounting hardware: (not included w/bracket)
	211-0504-00			2	SCREW, 6-32 x 1/4 inch, PHS
-41	387-0777-00			1	PLATE, rear
	- - - - - -			-	mounting hardware: (not included w/plate)
-42	212-0044-00			2	SCREW, 8-32 x 1/2 inch, RHS
-43	214-0370-00			2	PIN, locating

FIG. 2 REAR *(cont)*

Fig. & Index No.	Tektronix Part No.	Serial/Model No. Eff	Disc	Qty	Description 1 2 3 4 5
2-44	351-0063-00			2	GUIDE, plug-in
	- - - - - -			-	mounting hardware for each: (not included w/guide)
-45	211-0013-00			2	SCREW, 4-40 x 3/8 inch, RHS
-46	210-0004-00			2	LOCKWASHER, internal, #4
-47	210-0406-00			2	NUT, hex., 4-40 x 3/16 inch
-48	131-0096-00			1	CONNECTOR, 32 contact
	- - - - - -			-	mounting hardware: (not included w/connector)
-49	211-0097-00			2	SCREW, 4-40 x 5/16 inch, PHS
-50	210-0004-00			2	LOCKWASHER, internal, #4
-51	210-0201-00			2	LUG, solder, SE #4
-52	210-0406-00			2	NUT, hex., 4-40 x 3/16 inch
-53	124-0154-00			2	STRIP, ceramic, 7/16 inch h, w/20 notches
	- - - - - -			-	each strip includes:
	355-0082-00			2	STUD, plastic
	- - - - - -			-	mounting hardware for each: (not included w/strip)
	361-0009-00			2	SPACER, plastic, 0.406 inch long
-54	124-0149-00			2	STRIP, ceramic, 7/16 inch h, w/7 notches
	- - - - - -			-	each strip includes:
	355-0046-00			2	STUD, plastic
	- - - - - -			-	mounting hardware for each: (not included w/strip)
	361-0007-00			2	SPACER, plastic, 0.188 inch long
-55	124-0146-00			2	STRIP, ceramic, 7/16 inch h, w/16 notches
	- - - - - -			-	each strip includes:
	355-0046-00			2	STUD, plastic
	- - - - - -			-	mounting hardware for each: (not included w/strip)
	361-0007-00			2	SPACER, plastic, 0.188 inch long
-56	124-0145-00			22	STRIP, ceramic, 7/16 inch h, w/20 notches
	- - - - - -			-	each strip includes:
	355-0046-00			2	STUD, plastic
	- - - - - -			-	mounting hardware for each: (not included w/strip)
	361-0007-00			2	SPACER, plastic, 0.188 inch long
	344-0105-00			18	CLIP, test point
-57	179-0820-00			1	CABLE HARNESS, Horizontal Amplifier
-58	179-0755-01			1	CABLE HARNESS, A chassis
-59	179-0756-01			1	CABLE HARNESS, B chassis

STANDARD ACCESSORIES

	103-0036-00			1	ADAPTER, BSM-BNC (not shown)
	070-0640-00			2	MANUAL, instruction (not shown)

SECTION 9
DIAGRAMS

The following symbols are used on the diagrams:


Screwdriver adjustment

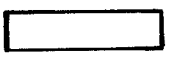
Front-, side- or rear-panel control or connector

Clockwise control rotation in direction of arrow

Refer to indicated diagram

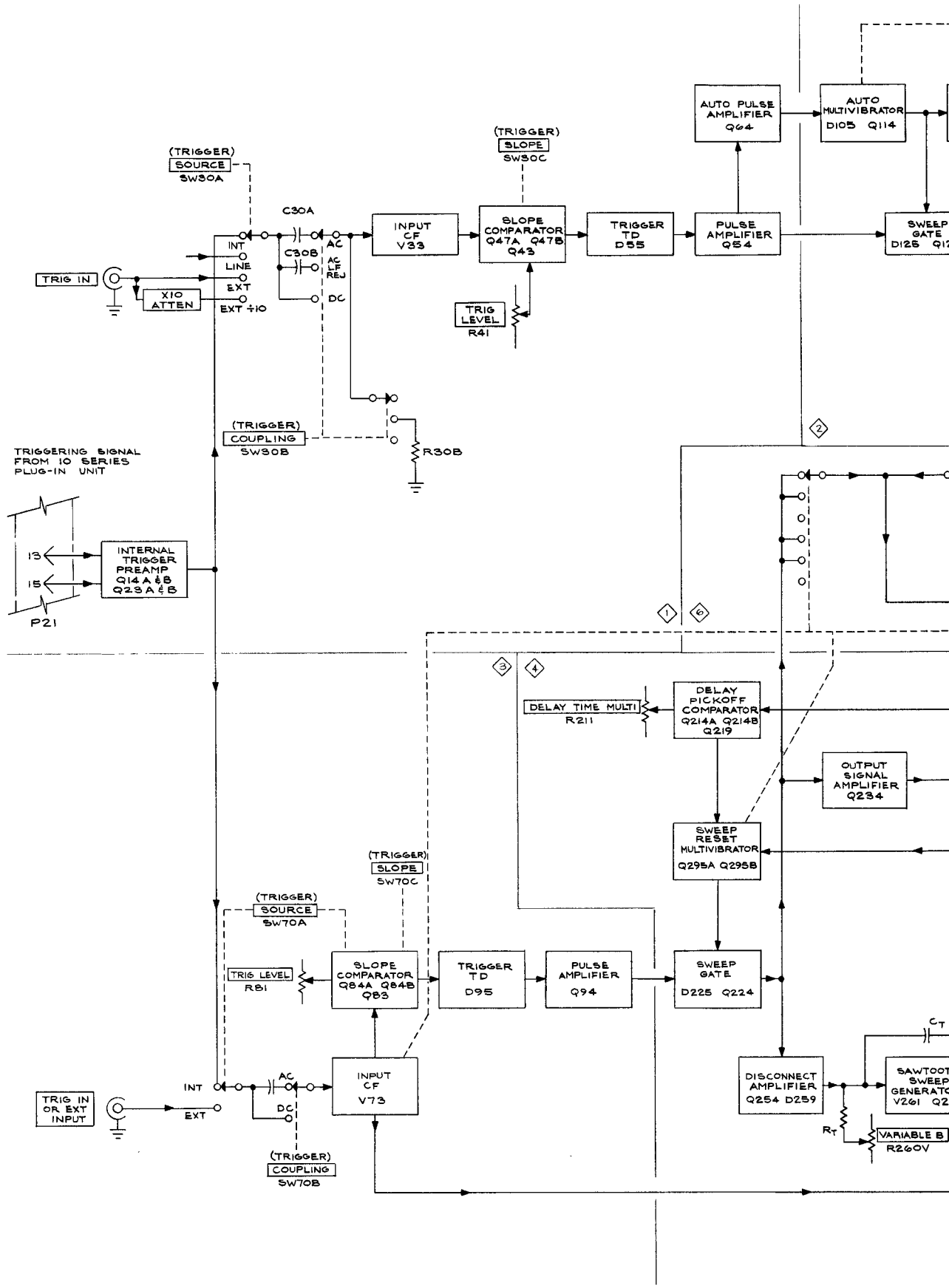

TYPE 11B2A PLUG-IN

A

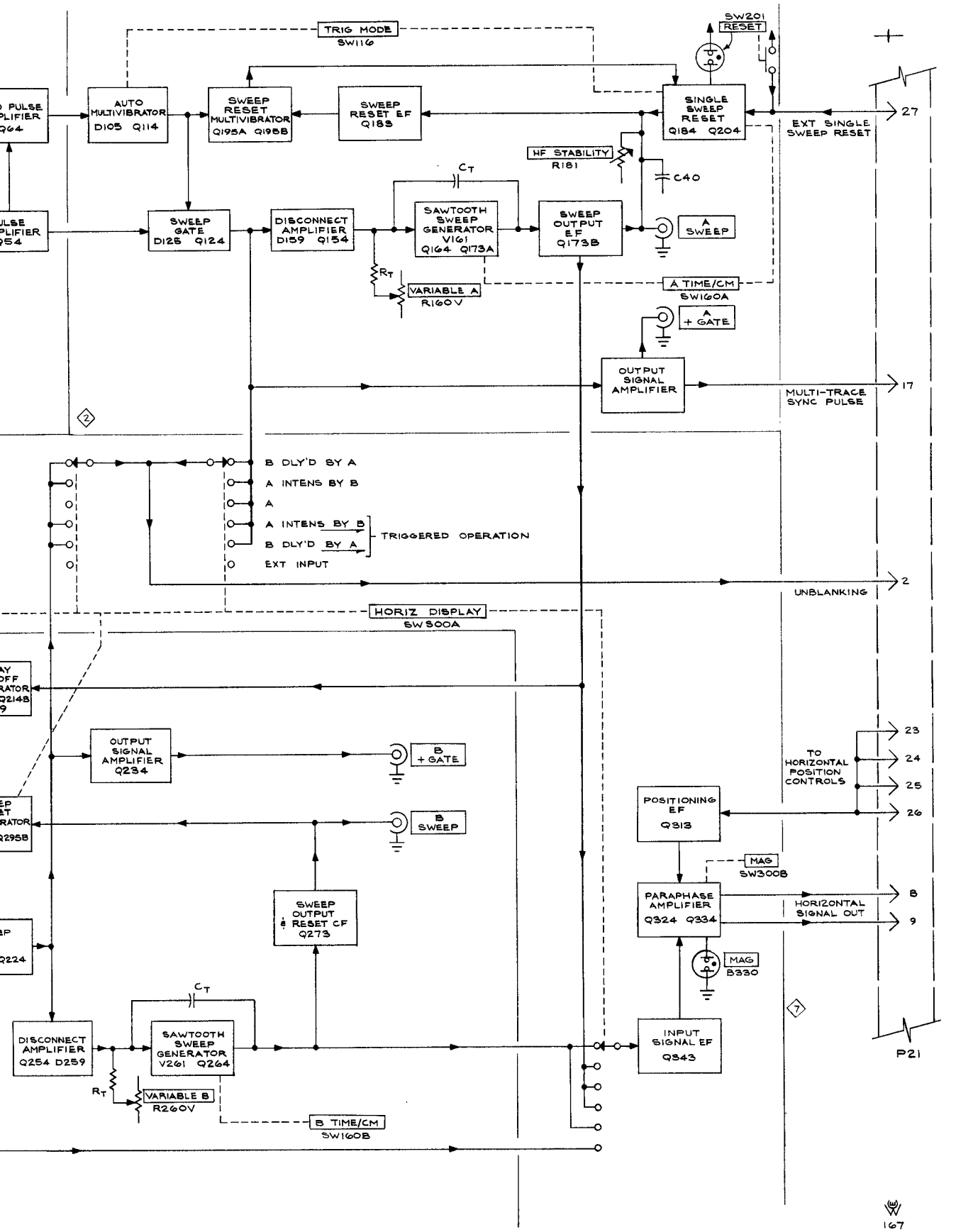

BLOCK DIAGRAM

A

VOLTAGE AND WAVEFORM TEST CONDITIONS

Typical voltage measurements and waveform photographs were obtained under the following conditions unless noted otherwise on the individual diagrams:

Test Oscilloscope (with 10× Probe)

Frequency response	DC to 10 MHz
Deflection factor (with 10× probe)	0.1 to 50 volts/division
Input impedance (with 10× probe)	10 Megohms, 7.5 picofarads
Probe ground	Type 11B2A chassis ground
Trigger Source	External from Type 11B2A A +Gate output connector of time-base unit to indicate true time relationship between signals
Recommended type (as used for waveforms on diagrams)	Type 545B with Type 1A1 plug-in unit

Voltmeter

Type	Nulling-type VTVM
Input impedance	10 megohms
Range	0 to 500 volts
Reference voltage	Type 11B2A chassis ground
Recommended type	Fluke Model 825A

Type 11B2A Conditions

Line voltage of indicator oscilloscope	115 volts
Signal applied	Five-volt calibrator signal from indicator oscilloscope for waveforms only
Trace position	Centered
Control settings	As follows except as noted otherwise on individual diagrams:
TRIG MODE	NORM
A SLOPE	+
A TRIG LEVEL	Midrange
A HF STABILITY	Midrange
A COUPLING	AC
A SOURCE	INT
B COUPLING	AC
B SOURCE	INT
B TRIG LEVEL	Midrange
B SLOPE	+
HORIZ DISPLAY	A INTEN BY B (triggered)
MAG	OFF
A TIME/CM	1 mSEC
B TIME/CM	5 μSEC
A VARIABLE (A TIME/CM)	CALIB
B VARIABLE (B TIME/CM)	CALIB
DELAY TIME MULT	1.00

10-Series Plug-In (Both channels if applicable)

Input Coupling	DC
Volts/Cm	1
Variable	Cal
Position	Adjust for centered display
Invert	Pushed in
Trigger	Norm
Mode	Ch 1

Indicator Oscilloscope Conditions

Intensity	Visible display
Focus	Adjust for optimum display
Astigmatism	Adjust for optimum display
Scale Illum	As desired
Calibrator	5 volts
Position (horizontal)	Midrange
Fine	Midrange

Voltages given on the diagrams are in volts. Waveforms shown are actual waveform photographs taken with a Tektronix Oscilloscope Camera System and Projected Graticule. Voltages and waveforms on the diagrams (shown in blue) are not absolute and may vary between instruments because of differing component tolerances, internal calbration, front-panel control settings, meter loading or meter accuracy.

VOLTAGE & WAVEFORM CONDITIONS

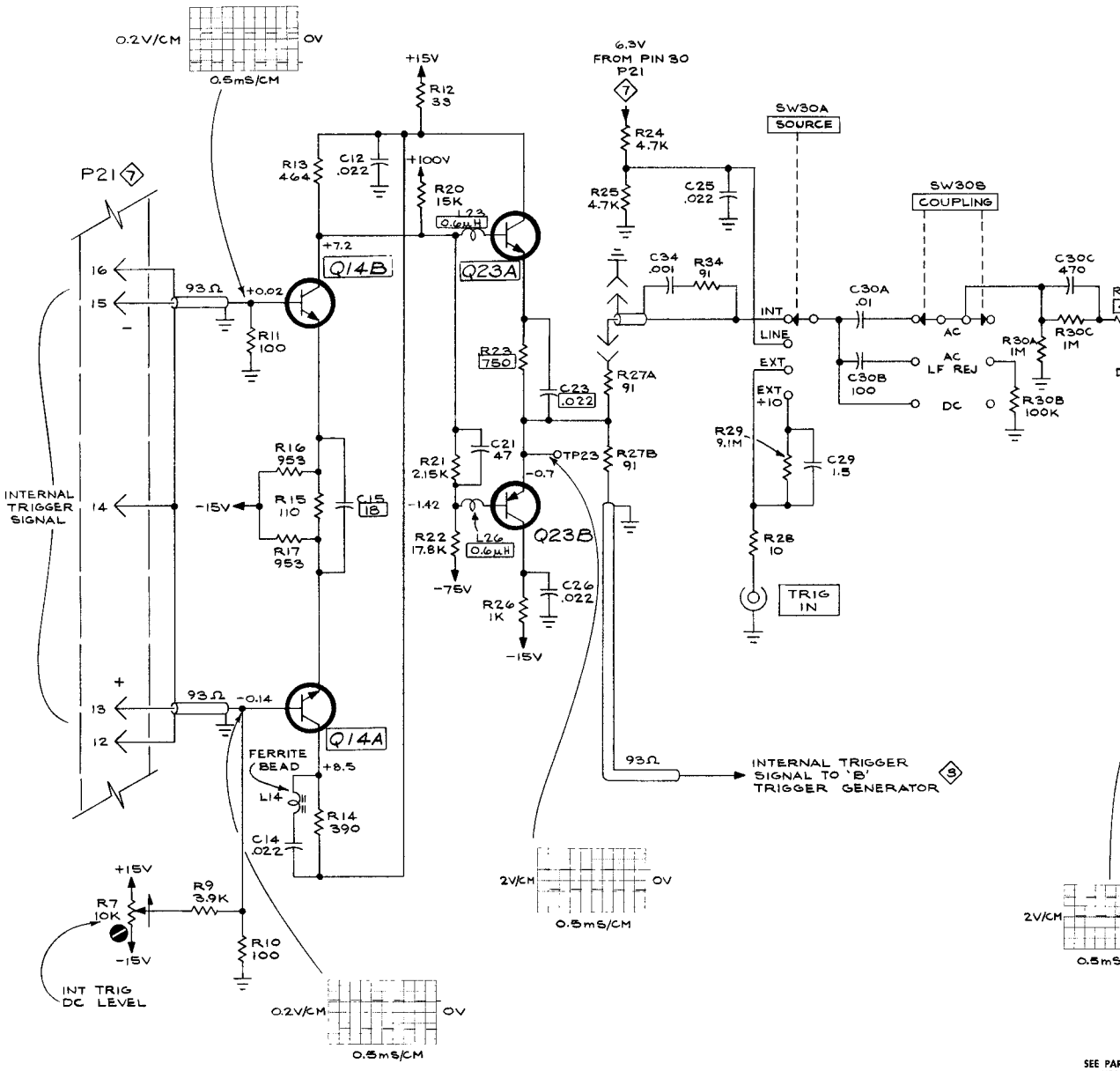

VOLTAGES and WAVEFORMS obtained under conditions given on left side of this diagram, except as follows:
VOLTAGES.....No signal applied
WAVEFORMS.....Five volt calibrator signal applied to Vertical Input only.

SEE PAR
VALUES
RANGES
WITH B

SEE
SEMIC

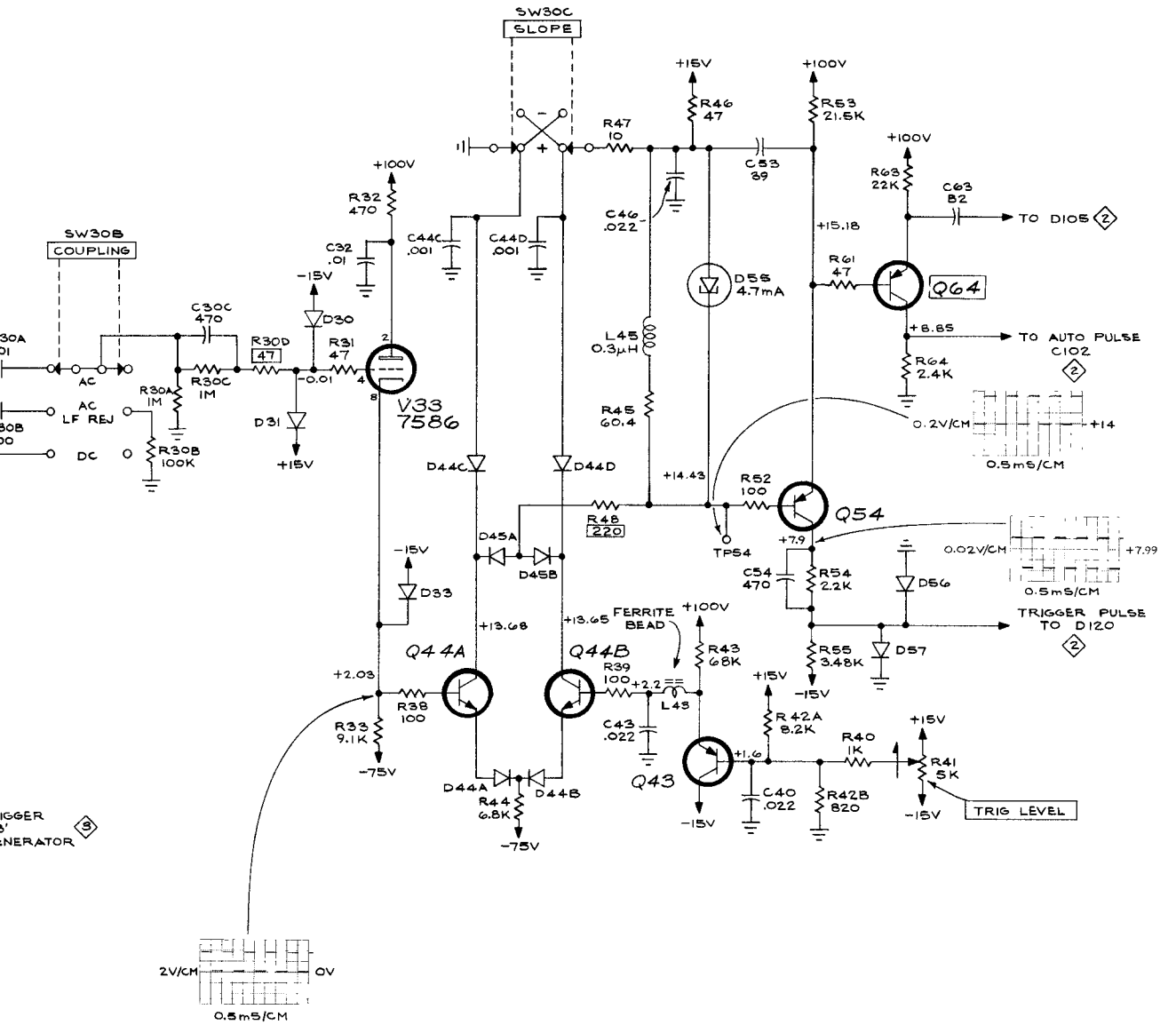

REFERENCE DIAGRAMS

- (2) 'A' SWEEP GENERATOR
- (3) 'B' TRIGGER GENERATOR
- (4) 'B' SWEEP GENERATOR
- (7) INTERCONNECTING PLUG

SEE PARTS LIST FOR EARLIER VALUES AND SERIAL NUMBER RANGES OF PARTS MARKED WITH BLUE OUTLINE.

SEE PARTS LIST FOR SEMICONDUCTOR TYPES

r

al applied
lt calibrator
applied to
l Input only.

E

168

'A' TRIGGER GENERATOR (1)

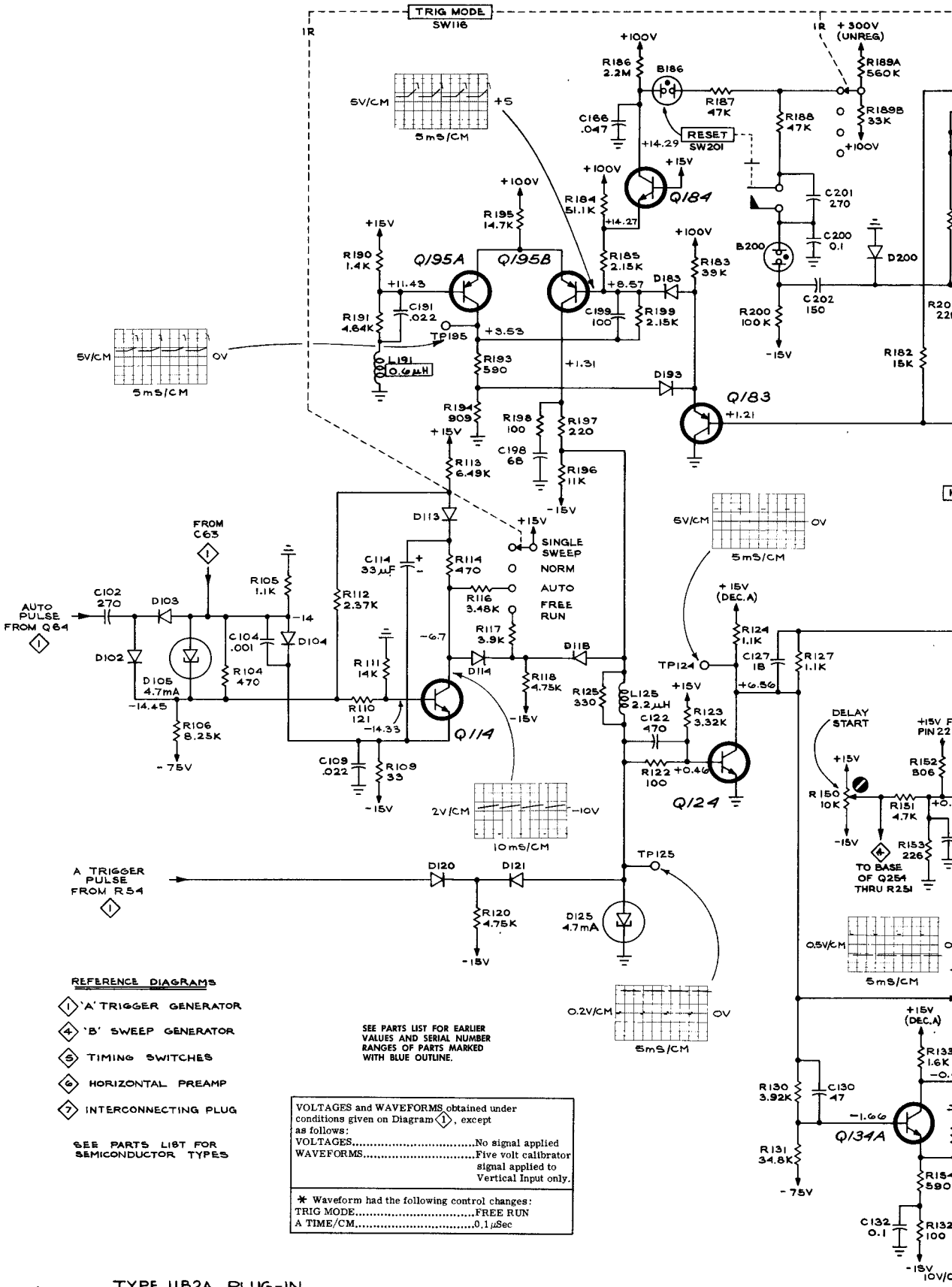

REFERENCE DIAGRAMS

- 1 'A' TRIGGER GENERATOR
- 4 'B' SWEEP GENERATOR
- 5 TIMING SWITCHES
- 6 HORIZONTAL PREAMP
- 7 INTERCONNECTING PLUG

SEE PARTS LIST FOR SEMICONDUCTOR TYPES

SEE PARTS LIST FOR EARLIER VALUES AND SERIAL NUMBER RANGES OF PARTS MARKED WITH BLUE OUTLINE.

VOLTAGES and WAVEFORMS obtained under conditions given on Diagram 1, except as follows:

VOLTAGES.....No signal applied

WAVEFORMS.....Five volt calibrator signal applied to Vertical Input only.

* Waveform had the following control changes:

TRIG MODE.....FREE RUN

A TIME/CM.....0.1 μSec

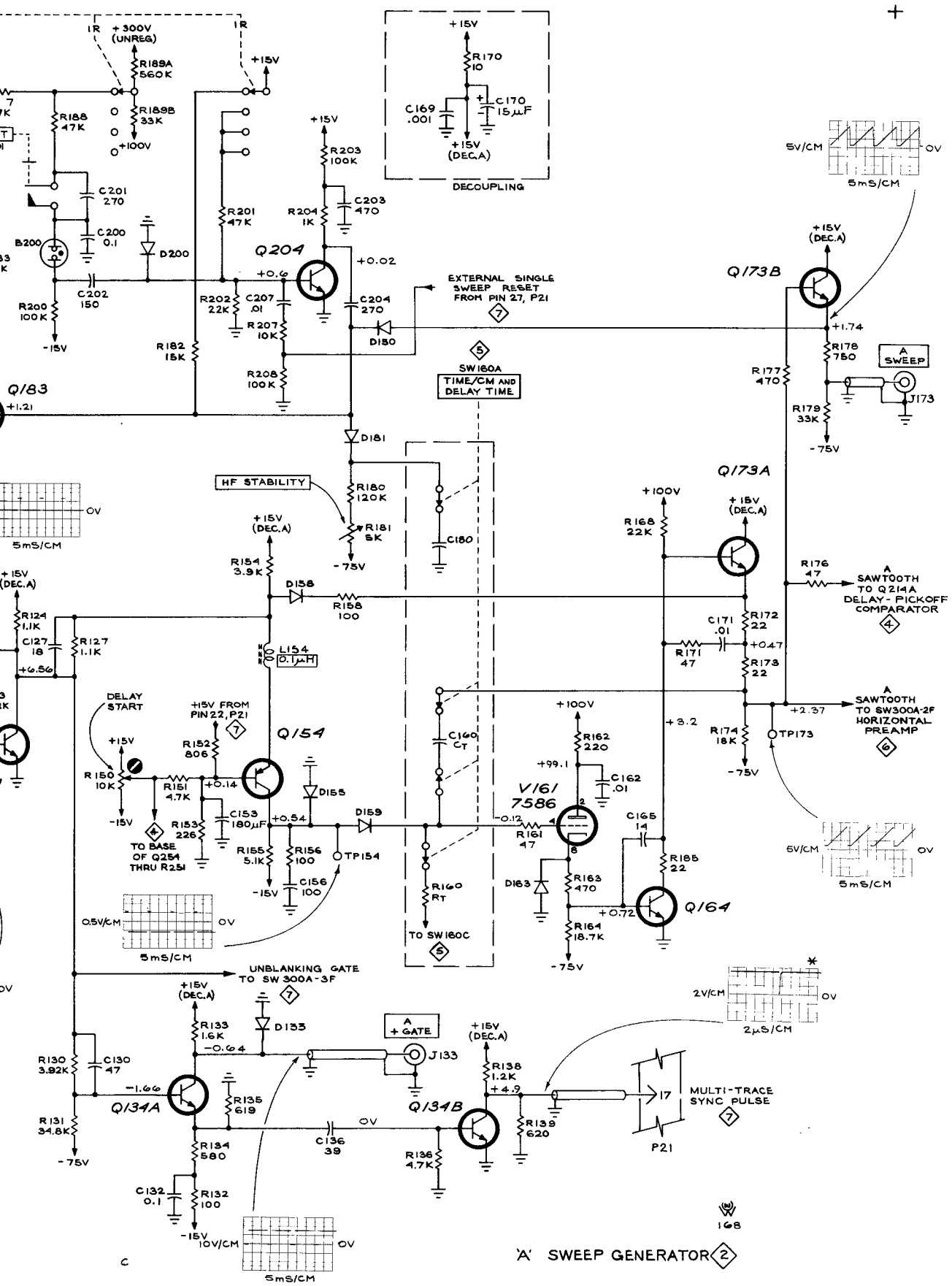
+300V (UNREG)
R189A 560K
R189B 33K
+100V
R188 47K
C201 270
C200 0.1
B200
D200
C202 150
R200 100K
-15V
Q183
+1.21
+15V
R203 100K
R204 1K
C203 470
R201 47K
Q204
+0.6
+0.02
R202 22K
C207 .01
R207 10K
C204 270
D150
R182 15K
R208 100K
D181
R180 120K
R181 5K
-75V
HF STABILITY
C180
+15V
R170 10
C169 .001
C170 15μF
+15V (DEC.A)
DECOUPLING
EXTERNAL SINGLE SWEEP RESET FROM PIN 27, P21
SW160A TIME/CM AND DELAY TIME
5V/CM
5mS/CM
Q173B
+1.74
R178 750
A SWEEP
J173
R177 470
R179 33K
Q173A
+100V
R168 22K
R176 47
A SAWTOOTH TO Q214A DELAY-PICKOFF COMPARATOR
R154 3.9K
D158
R158 100
R124 1.1K
C127 18
R127 1.1K
+6.56
L154 0.1μH
C171 .01
R172 22
R171 47
+0.47
R173 22
+2.37
A SAWTOOTH TO SW300A-2F HORIZONTAL PREAMP
DELAY START
+15V FROM PIN 22, P21
R152 806
Q154
R150 10K
R151 4.7K
+0.14
D155
C153 180μF
R153 226
TO BASE OF Q254 THRU R251
+0.54
D159
R155 5.1K
R156 100
C156 100
TP154
C160 CT
R160 RT
TO SW160C
+100V
R162 220
+99.1
C162 .01
V161 7586
R161 47
+3.2
R174 18K
TP173
C165 14
R185 22
D163
R163 470
+0.72
Q164
R164 18.7K
0.5V/CM
UNBLANKING GATE TO SW300A-3F
2V/CM
2μS/CM
R133 1.6K
D133
-0.64
A + GATE
J133
R138 1.2K
+4.9
R130 3.92K
C130 47
-1.66
Q134A
R135 619
Q134B
R139 620
MULTI-TRACE SYNC PULSE
P21
R131 34.8K
R134 580
C136 39
R136 4.7K
C132 0.1
R132 100
10V/CM
168
'A' SWEEP GENERATOR

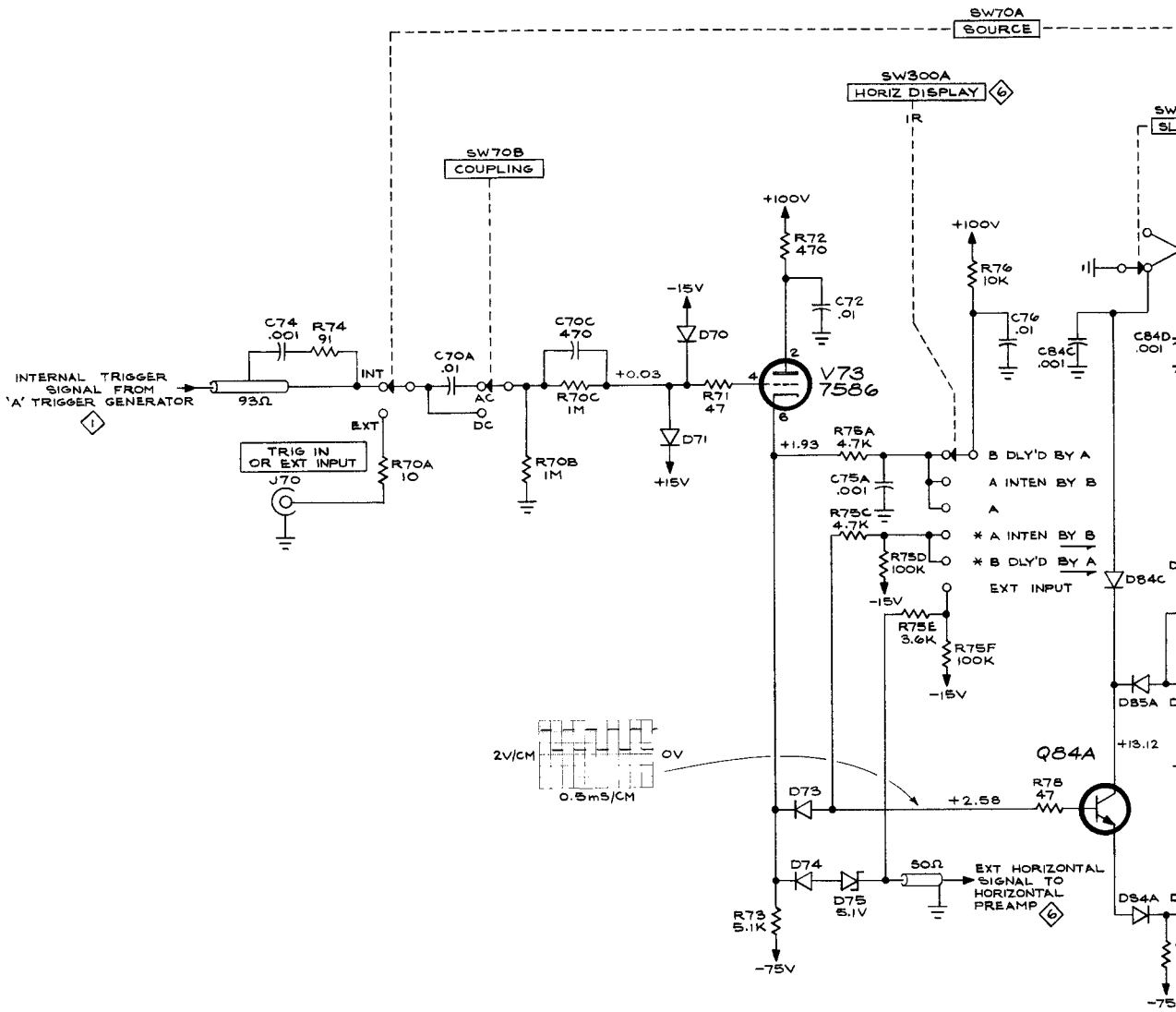

SEE PARTS LIST FOR EARLIER VALUES AND SERIAL NUMBER RANGES OF PARTS MARKED WITH BLUE OUTLINE.

VOLTAGES and WAVEFORMS obtained under conditions given on Diagram 1, except as follows:

VOLTAGES.....No signal applied

WAVEFORMS.....Five volt calibrator signal applied to Vertical Input only.

SEE
SEM

* IND

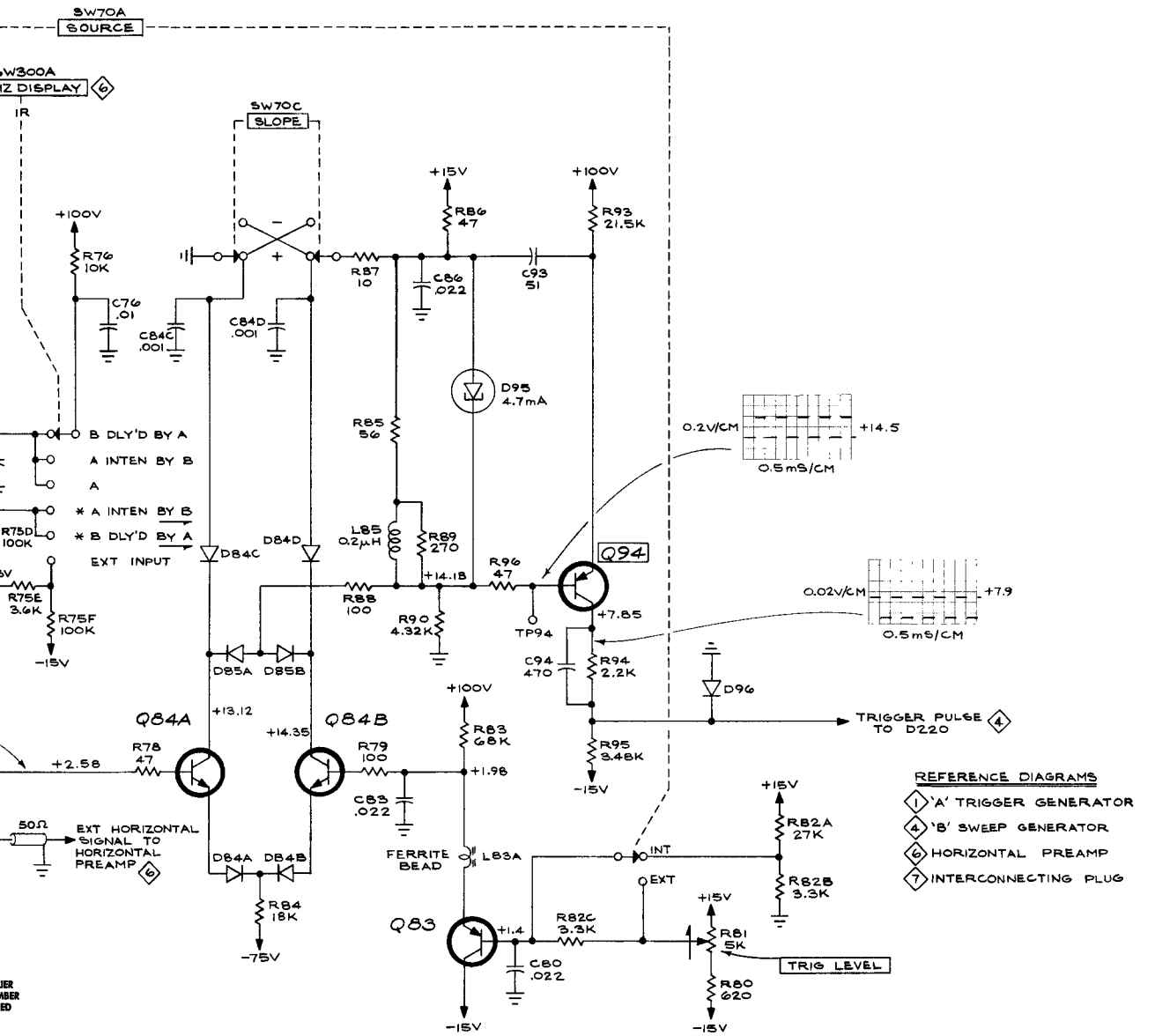

d under
pt

o signal applied
ive volt calibrator
signal applied to
ertical Input only.

SEE PARTS LIST FOR
SEMICONDUCTOR TYPES

* INDICATES TRIGGERED
OPERATION

667

B

'B' TRIGGER GENERATOR 3

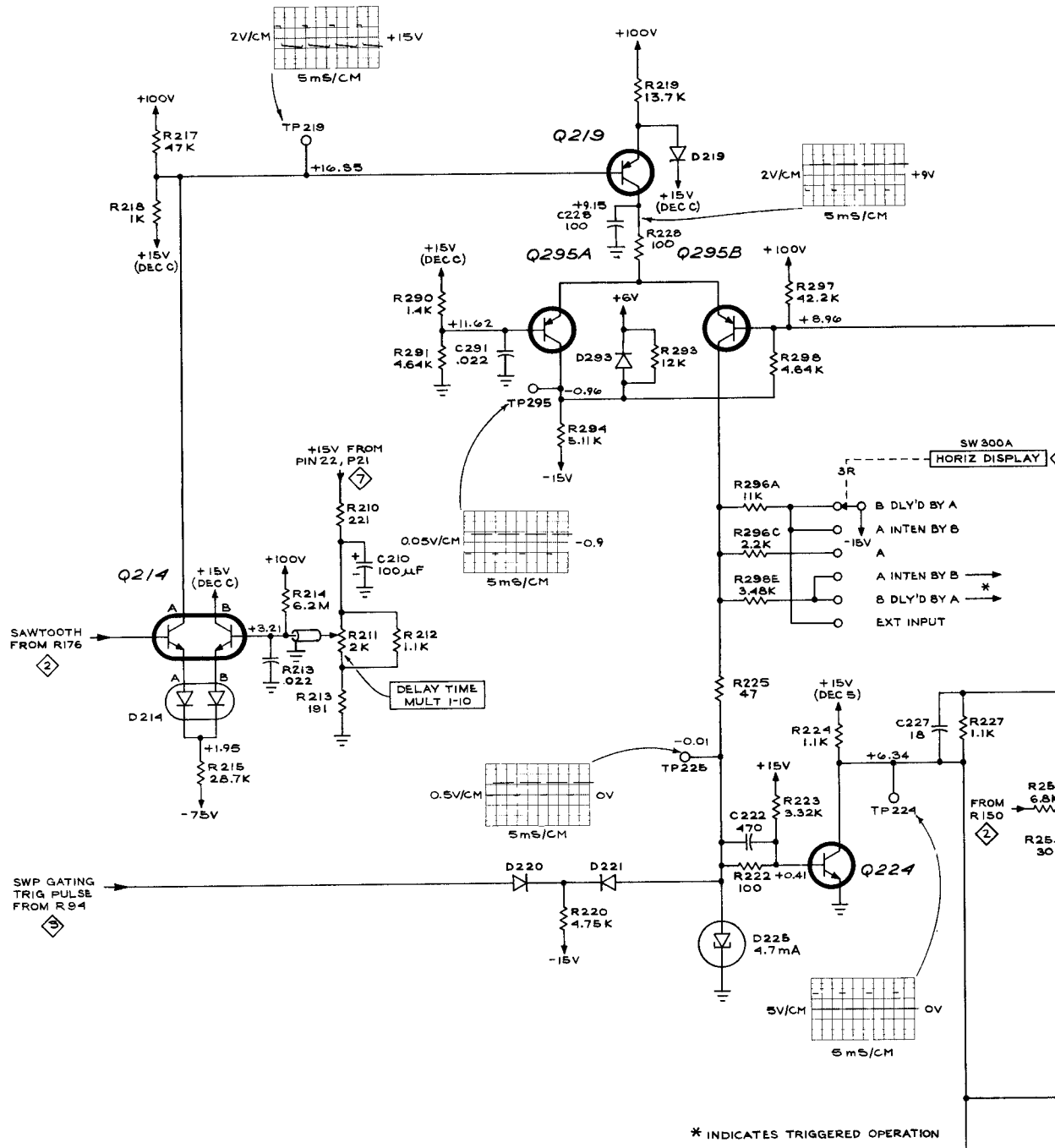

VOLTAGES and WAVEFORMS obtained under conditions given on Diagram 1, except as follows:
VOLTAGES.....No signal applied
WAVEFORMS.....Five volt calibrator signal applied to Vertical Input only.

SEE PARTS LIST FOR SEMICONDUCTOR TYPES

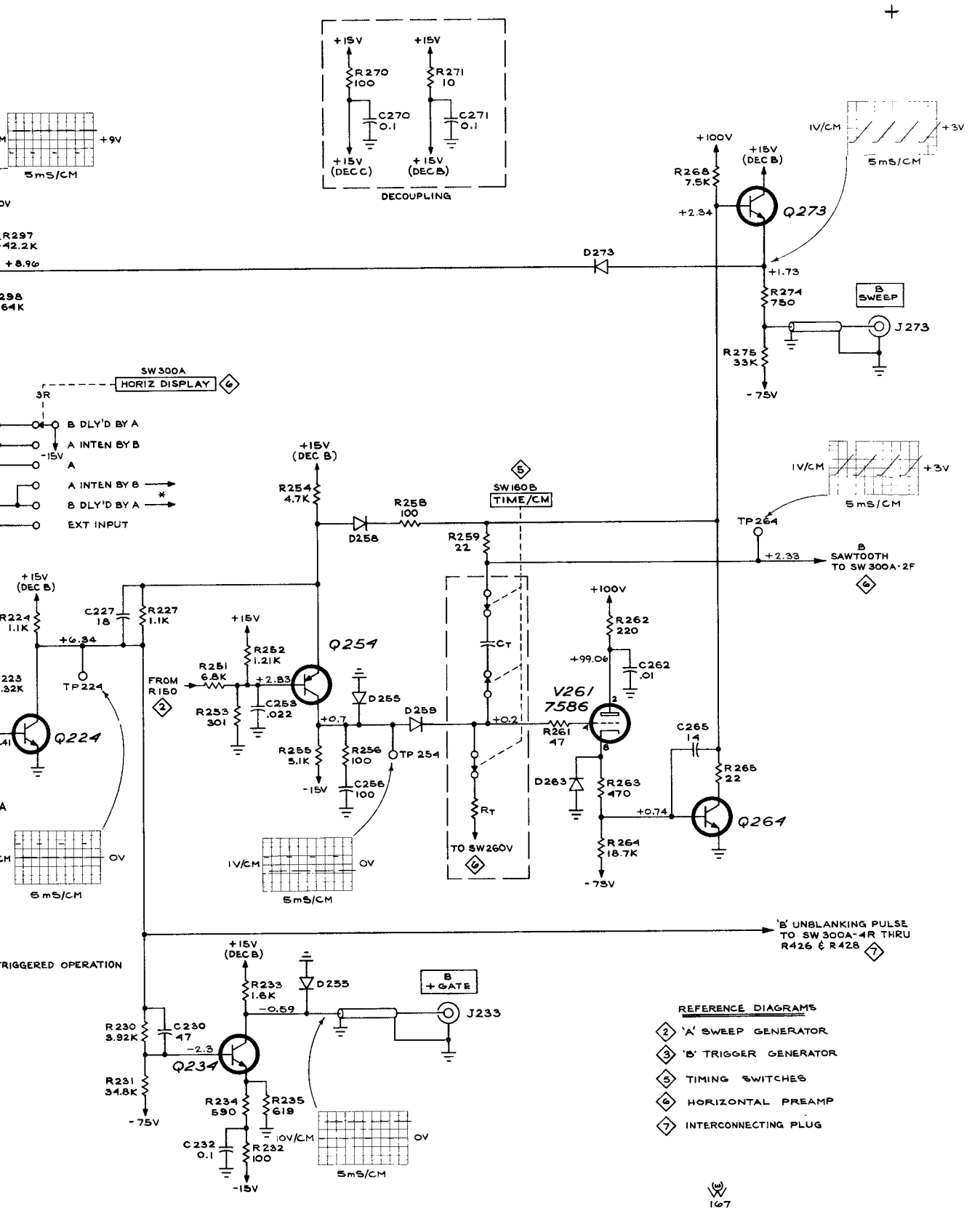

A

'B' SWEEP GENERATOR 4

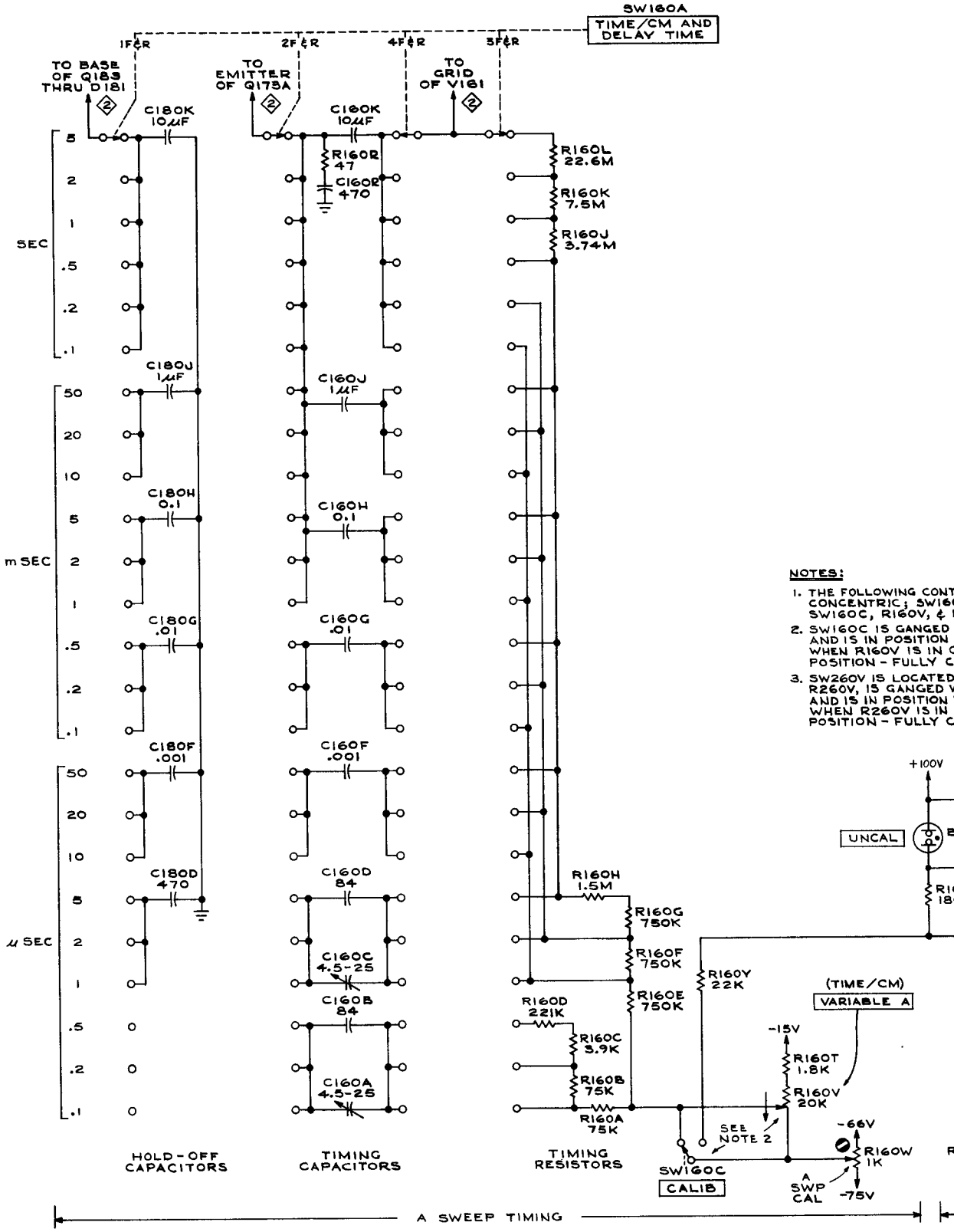

TYPE 11B2A PLUG-IN

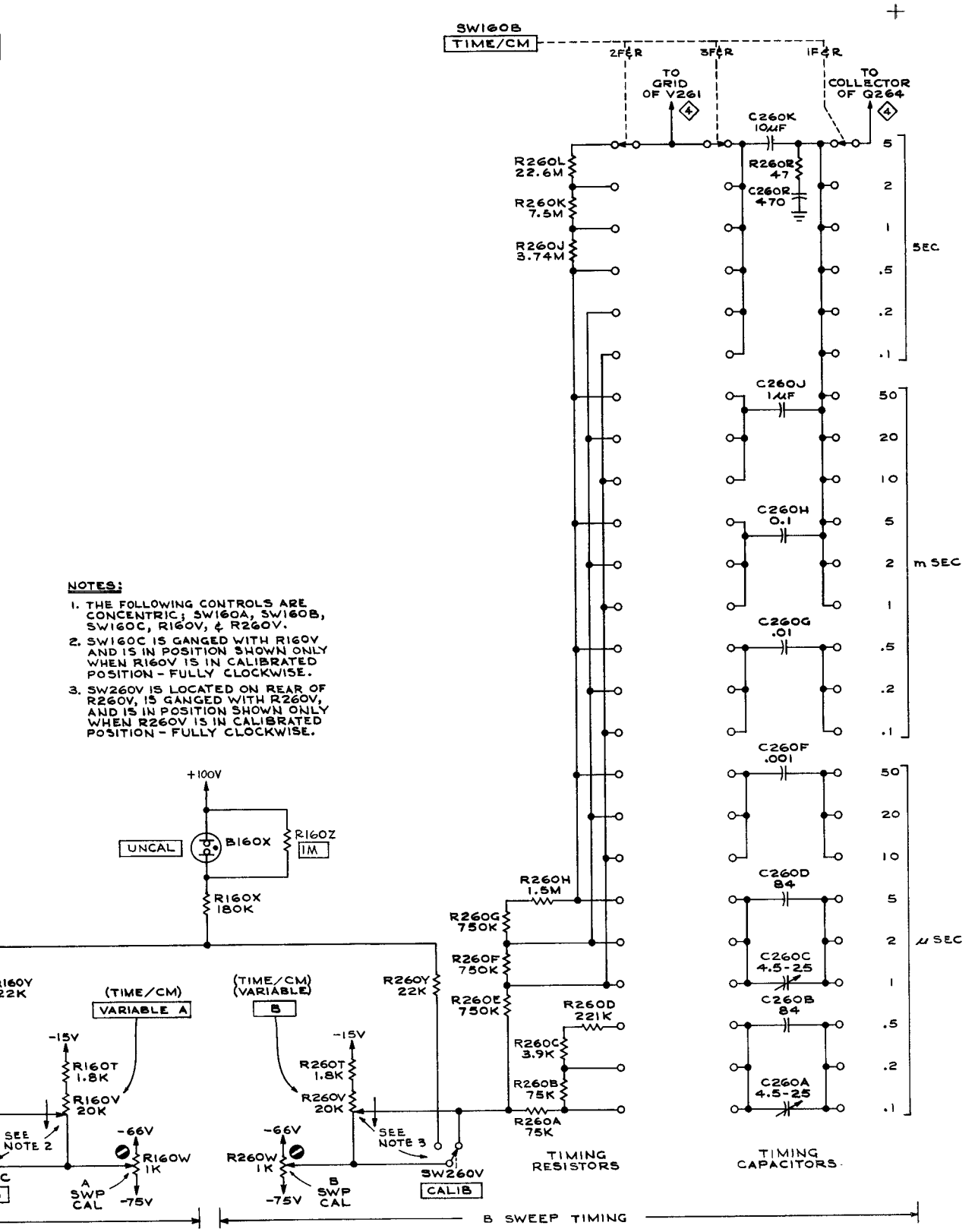

NOTES:

1. THE FOLLOWING CONTROLS ARE CONCENTRIC; SW160A, SW160B, SW160C, R160V, & R260V.
2. SW160C IS GANGED WITH R160V AND IS IN POSITION SHOWN ONLY WHEN R160V IS IN CALIBRATED POSITION - FULLY CLOCKWISE.
3. SW260V IS LOCATED ON REAR OF R260V, IS GANGED WITH R260V, AND IS IN POSITION SHOWN ONLY WHEN R260V IS IN CALIBRATED POSITION - FULLY CLOCKWISE.

B

SEE PARTS LIST FOR EARLIER VALUES AND SERIAL NUMBER RANGES OF PARTS MARKED WITH BLUE OUTLINE.

467

TIMING SWITCHES 5

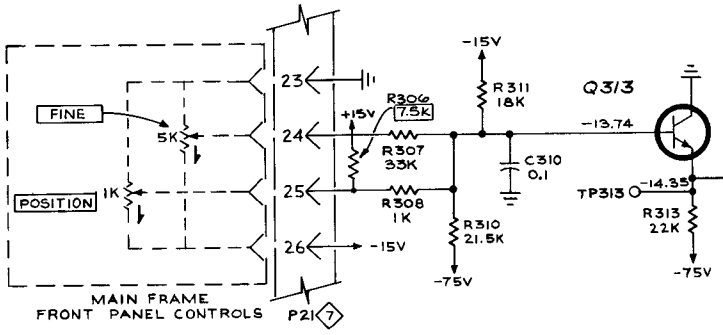

REFERENCE DIAGRAMS

2 'A' SWEEP GENERATOR

3 'B' TRIGGER GENERATOR

4 'B' SWEEP GENERATOR

7 INTERCONNECTING PLUG

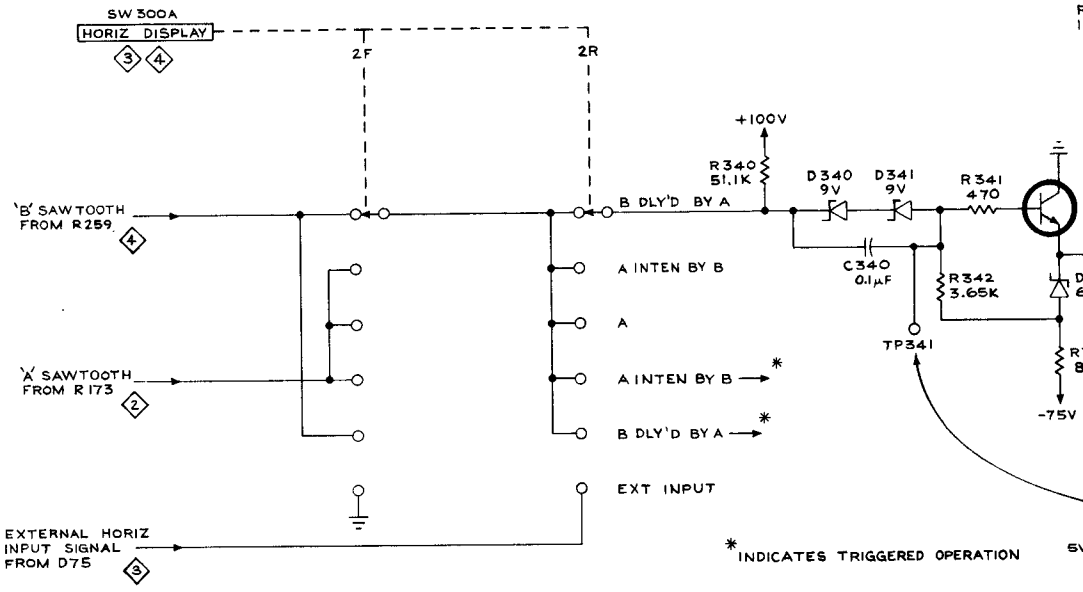

TYPE 11B2A PLUG-IN

VOLTAGES and WAVEFORMS obtained under conditions given on Diagram 1, except as follows:
VOLTAGES.....No signal applied
WAVEFORMS.....Five volt calibrator signal applied to Vertical Input only.

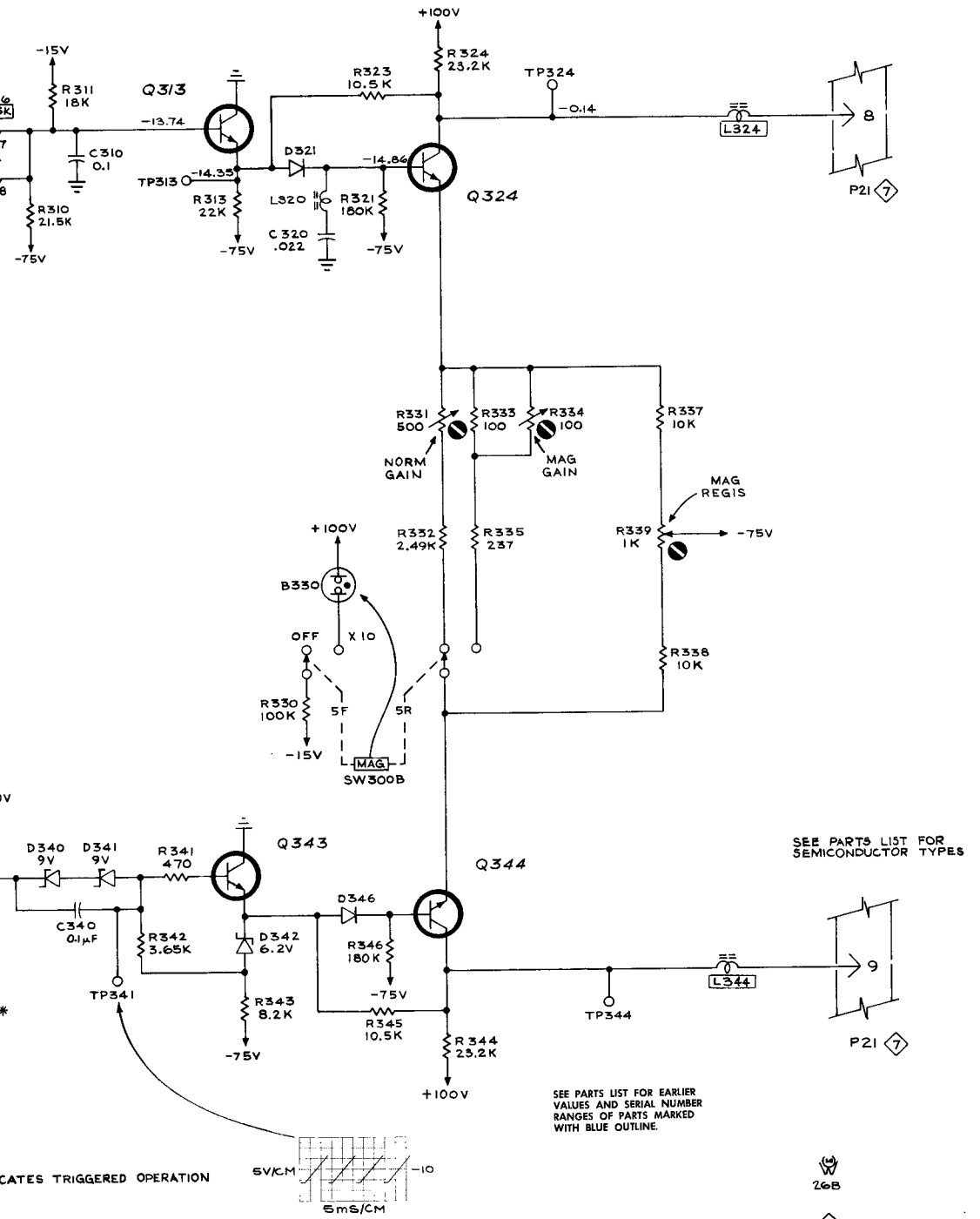
+100V
-15V
R311
18K
Q313
R323
10.5K
R324
23.2K
TP324
-0.14
L324
8
P21 7
-13.74
C310
0.1
D321
-14.86
TP313
-14.35
R313
22K
L320
R321
180K
Q324
R310
21.5K
-75V
C320
.022
R331
500
R333
100
R334
100
R337
10K
NORM GAIN
MAG GAIN
MAG REGIS
R332
2.49K
R335
237
R339
1K
B330
OFF
X 10
R338
10K
R330
100K
5F
5R
MAG
SW300B
D340
9V
D341
9V
R341
470
Q343
Q344
SEE PARTS LIST FOR SEMICONDUCTOR TYPES
C340
0.1μF
R342
3.65K
D342
6.2V
D346
R346
180K
L344
9
TP341
R343
8.2K
R345
10.5K
TP344
R344
23.2K
P21 7
SEE PARTS LIST FOR EARLIER VALUES AND SERIAL NUMBER RANGES OF PARTS MARKED WITH BLUE OUTLINE.
CATES TRIGGERED OPERATION
5V/CM
-10
5mS/CM
26B
HORIZONTAL PREAMP 6
d under
o signal applied
tive volt calibrator
ignal applied to
ertical Input only.

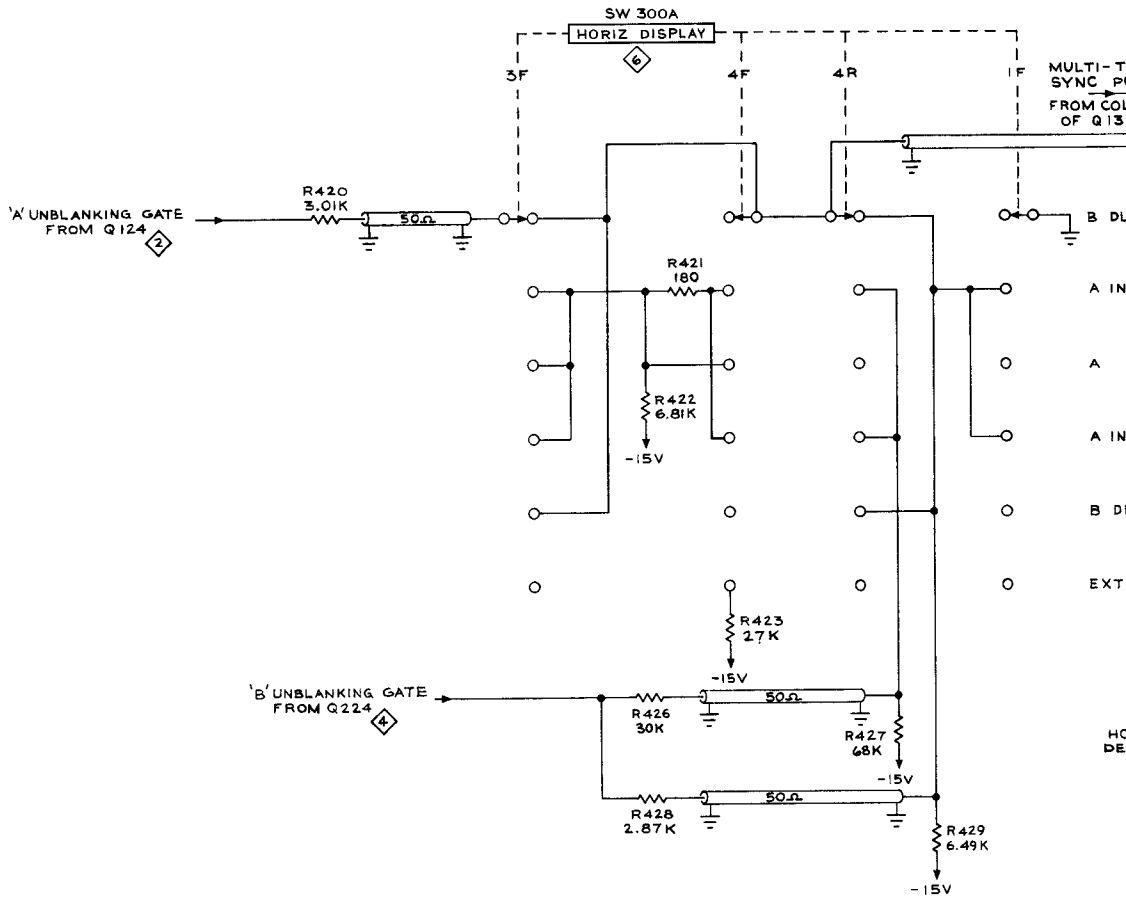

REFERENCE DIAGRAMS

1 'A' TRIGGER GENERATOR

2 'A' SWEEP GENERATOR

4 'B' SWEEP GENERATOR

6 HORIZONTAL PREAMP

*INDICATES TRIGGERED OPERATION

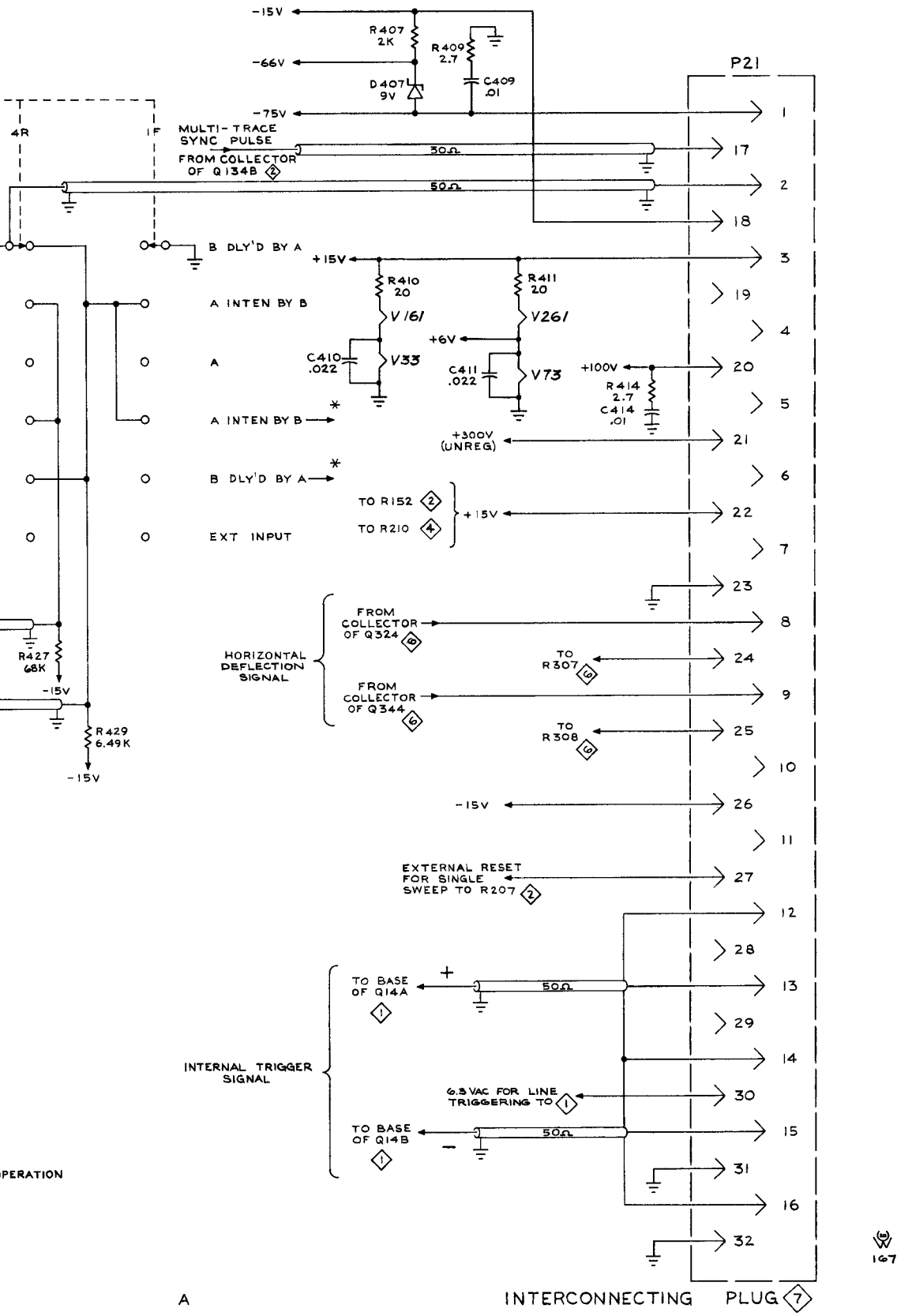

A

INTERCONNECTING PLUG 7

FIG. 1 FRONT

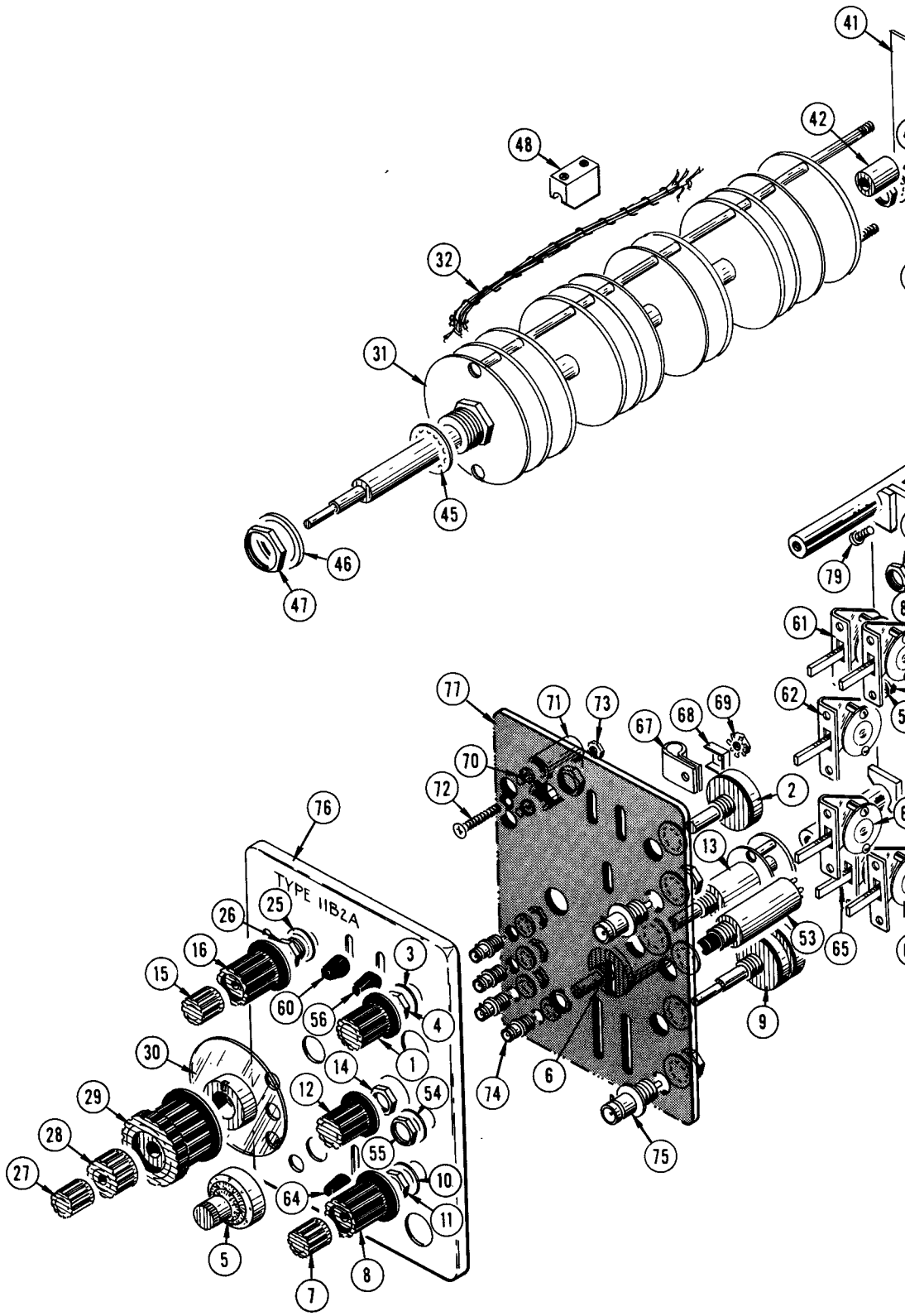

FIG. 1 FRONT

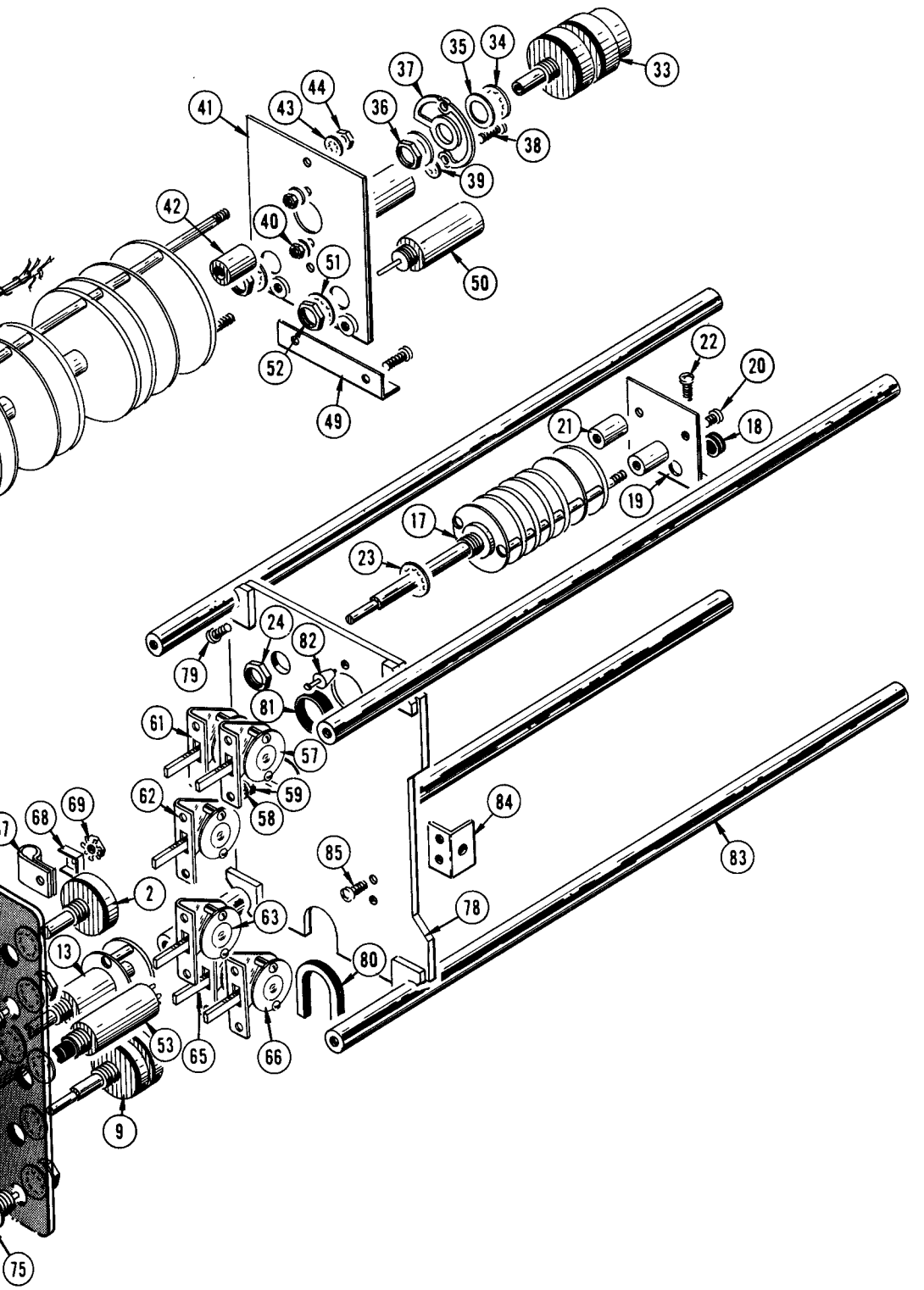
33
34
35
37
36
38
39
41
43
44
42
40
51
50
52
49
22
20
18
21
19
17
23
24
82
79
81
61
57
59
62
58
68
69
84
85
83
2
63
78
13
80
53
65
66
9
75

FIG. 2 REAR

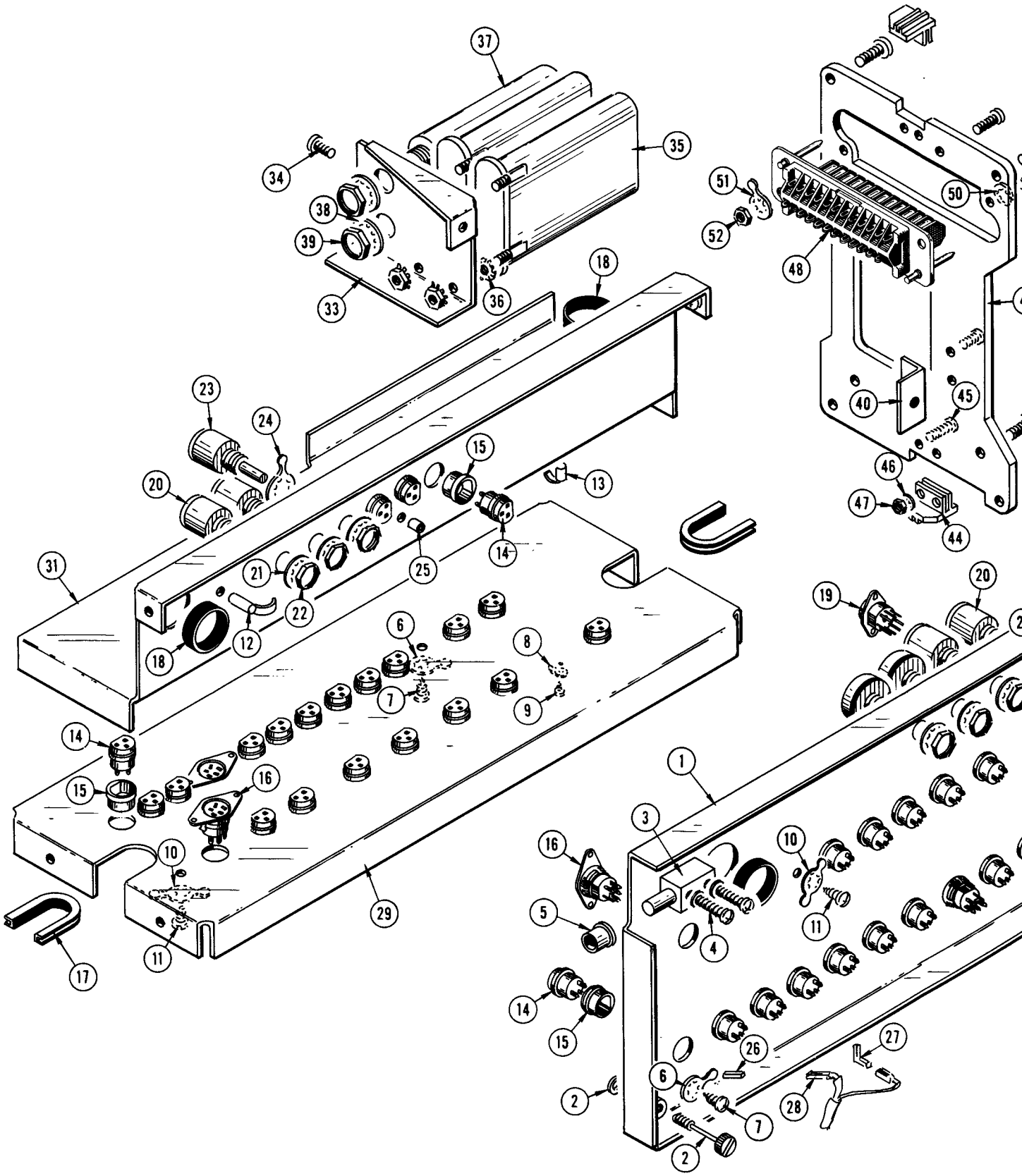
37
35
34
38
39
33
36
18
51
52
50
48
40
45
46
47
44
23
24
20
15
13
14
25
31
21
22
12
18
6
8
7
9
14
15
16
10
29
17
11
19
20
1
3
16
10
5
4
11
14
15
26
27
6
2
7
28
2

A

FIG. 2 REAR

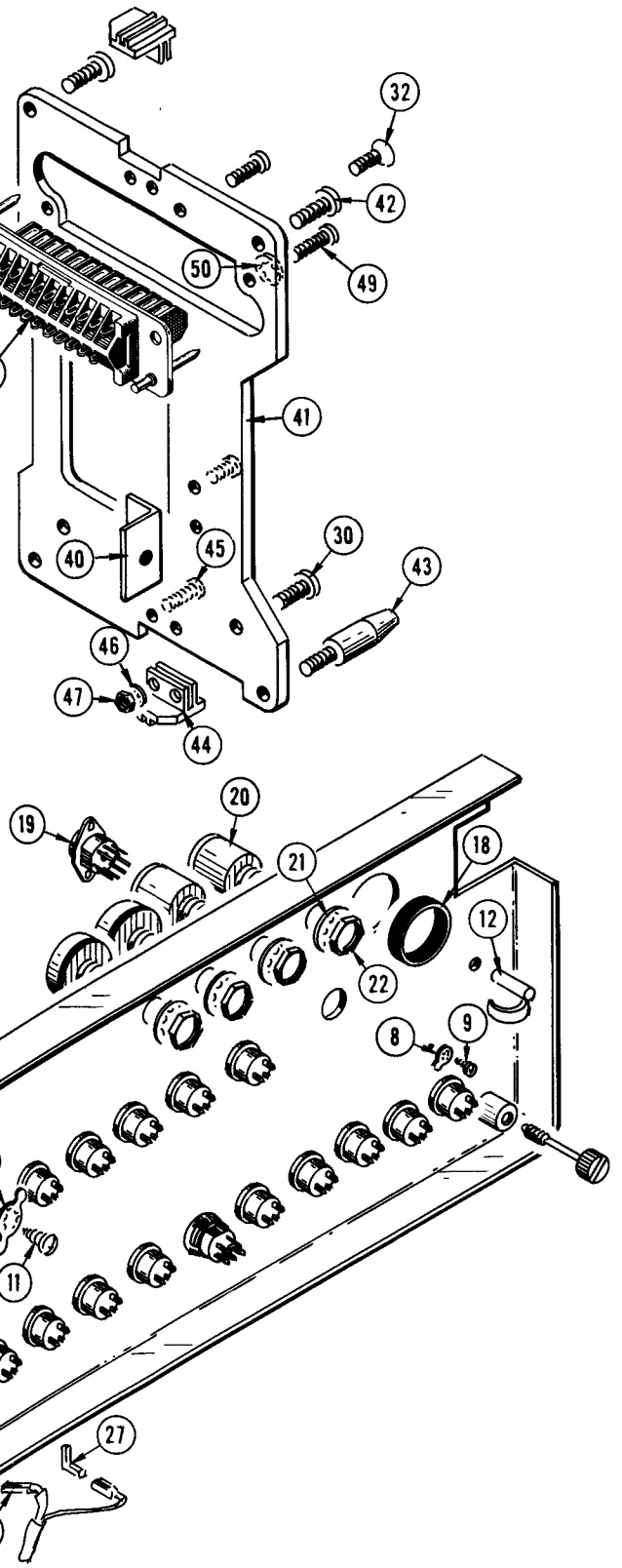
32
42
50
49
41
40
45
30
43
46
47
44
19
20
21
18
12
22
8
9
11
27

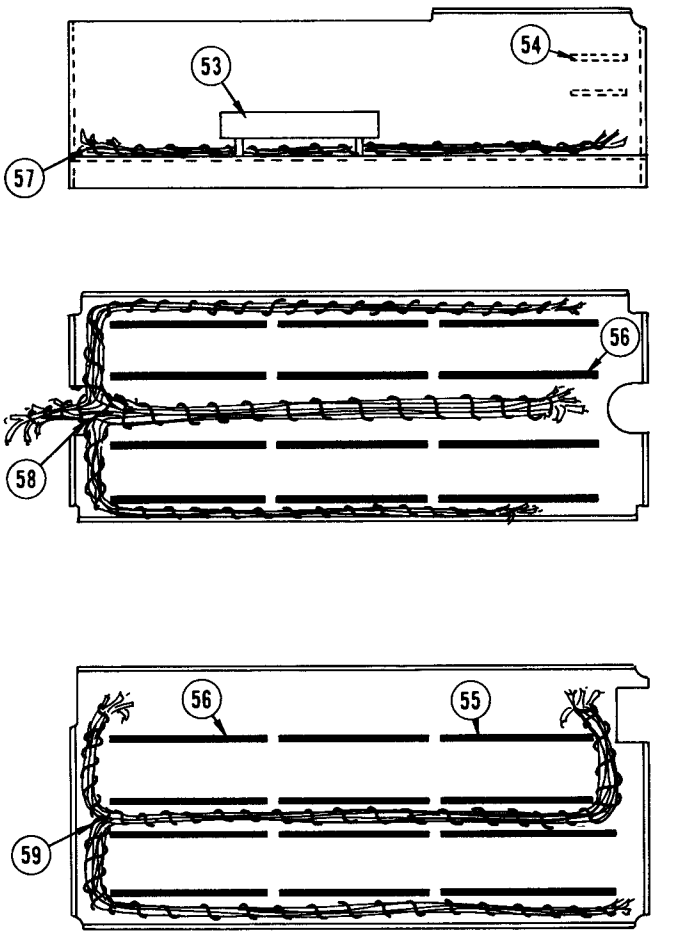
54
53
57
56
58
56
55
59

MANUAL CHANGE INFORMATION

At Tektronix, we continually strive to keep up with latest electronic developments by adding circuit and component improvements to our instruments as soon as they are developed and tested.

Sometimes, due to printing and shipping requirements, we can't get these changes immediately into printed manuals. Hence, your manual may contain new change information on following pages. If it does not, your manual is correct as printed.

TYPE 11B2A TENT SN 650

ELECTRICAL PARTS LIST CORRECTION

CHANGE TO:

D75	152-0279-00	1N751A	0.4 w, 5.1 V, ±5%
D343	152-0280-00	1N753A	0.4 w, 6.2 V, ±5%