#110

TEKTRONIX

Inter-Office Communication

To: Chuck Nolan

Date: March 18, 1964

BEAVERTON

From: George Edens

Subject: Brooklyn Navy Yard
Requirement for 515A Mod 760A
Ref: My March 10th memo

The attached IOC from George Muckenstrom lists some changes in Mod 760A desired by the customer. Will this be sufficient information for a quote on 3 scopes? Unless you need more details, please proceed with the quote.

Thanks.

George

George

GEE:jlb
cc: Ron Goard
GE-160

Inter-Office Communication

MAR 18 P.M.

TEKTRONIX, INC.

Date: March 17, 1964

LONG ISLAND

To: George Edens

From: George Muckenstrom

Subject: Brooklyn Navy Yard
Requirement for 515A Mod 760A

Dear George:

Mr. Cannova of the Navy yard is heading up a project to study shipboard power line transients. He knows very little about the amplitude, time or repetition rate of these transients and therefore needs equipment that will get him into the right ball park. The 515A mod 760A was shown to him by G.E., he feels and I agree, that this instrument along with a Beattie Coleman KD5HD automatic camera will enable him to make a preliminary study.

After the transients are defined, studies will be made to determine their source and effect on electronic equipment. Mr. Cannova hopes that further along in the project he will be able to duplicate shipboard conditions in the lab and proceed with conventional oscilloscopes.

At this stage Mr. Cannova will start the Navy's paperwork on 3 units as soon as we can quote price and delivery. The scope as is will do the job. However, if the following changes are practical we would like to have them considered.

1. Vertical input UHF connector. To eliminate possibility of probe damage, as the scope will be moved quite often. (Very Important) No Problem

2. Standard vertical input so that a x100 or x10 probe can be used to look at lower voltages. No Prob.

3. Calibrator available at the front panel for compensating probes. (Not necessary unless #2 is done.) No Prob.

4. Added sweep speed, 500 usec. (I recommended this as we're not sure of pulse width.) Extra

5. Automatic one hour timer replaced with a unit that will reset after each display.
(I can't see how this can be done economically, $50.00 or less. If you have something fine, if not, okay.)

That is all I have George. If you have any recommendations I'd be glad to hear them.

As to replacing the P6013 probe with a P6015, I doubt if the voltage capabilities of the P6013 will be exceeded and I think long term stability will be more important than performance.

Best,

George Muckenstrom

George Muckenstrom

GM:js

George Muckenstrom
Long Island

March 11, 1964

George Edens

Brooklyn Navy Yard
Requirement for 515A Mod. 760A

Dear George:

The enclosed material will give you a fair idea of Mod 760A. After you have looked it over and consulted with the customer, I hope you will have adequate information to give me a detailed writeup of the customer's requirements.

The P6015 has become available since the first 760A's were furnished. Perhaps it would be the best probe to use since the customer is uncertain of the voltages he will encounter. Besides, it's a much better probe than the P6013 in all other respects.

I will be looking forward to hearing from you.

Best regards,

George

GEE:jlb
complete description of Type 515A, Mod 760A
attached to IOC (pictures enclosed also)

Inter-Office Communication

To: Chuck Nolan

Date: March 10, 1964

From: George Edens

BEAVERTON

Subject: Brooklyn Navy Yard
Requirement for 1 to 5 Type
515A Mod 760A
Ref: Phone call from George Muckenstrom

George explained that a group at the Navy Yard have begun a project to analyze shipboard power systems for sources of transients and their effects on electrical equipment. They have seen one of the specials purchased by GE and have decided it is ideal for the job.

George is calling on the group again on Wednesday the 11th and would like to know whether we are interested in the requirement. If you agree, I would like to tell him we will supply a minimum quantity of 3 scopes. Price and availability information won't be needed immediately.

George

George

GEE:jlb
(GE-160)

3/13/64

Jessie: Si tells me that George has the ball on this one. We may quote it later.

RECEIVED
MAR 13 A.M.
TEKTRONIX, INC.

mj

TLX MARCH 11, 1964 TO GEORGE MUCKENSTROM, LONG ISLAND FROM GEORGE EDENS

RE: BROOKLYN NAVY YARD REQUEST FOR TYPE 515A MOD 760A.

WE ARE INTERESTED IN PURSUING THE REQUIREMENT. PREFER TO QUOTE ON A MINIMUM QUANTITY OF THREE SCOPES.

I AM MAILING YOU MATERIAL DESCRIBING THE SCOPE AS PREVIOUSLY SUPPLIED TO GENERAL ELECTRIC. TO ASSIST YOU IN DETERMINING SPECIFIC TECHNICAL REQUIREMENTS. PRICE AND AVAILABILITY QUOTE WILL BE WORKED UP AFTER WE ARE SURE OF ALL DETAILS OF THE CUSTOMERS REQUIREMENTS. AS A GUESS THE PRICE WILL BE AROUND $1,000.00 EACH ADDITIONAL TO STANDARD INSTRUMENT.

PLEASE PHONE ME TODAY IF YOU NEED MORE INFORMATION.

cc: RON GOARD
SI CORN

Inq # 96-160

BE780 3-11 GEORGE.NUCKENSTROH .LONG I FM GEORGE EDENS U. S. MARKETING
REFERENCE BROOKLYN NAVY YARD REQUEST FOR TYPE 515A MOD 760A.

WE ARE INTERESTED IN PURSUING THE REQUIREMENT. PREFER TO QUOTE ON A MINIMUM QUANTITY OF THREE SCOPES.

I AM MAILING YOU MATERIAL DESCRIBING THE SCOPES AS PREVIOUSLY SUPPLIED TO GENERAL ELECTRIC TO ASSIST YOU IN DETERMINING SPECIFIC TECHNICAL REQUIREMENTS. PRICE AND AVAILABILITY QUOTE WILL BE WORKED UP AFTER WE ARE SURE OF ALL DETAILS OF THE CUSTOMERS REQUIREMENTS. AS A GUESS THE PRICE WILL BE AROUND $1000 EACH ADDITIONAL TO STANDARD INSTRUMENT.

PLEASE PHONE ME TODAY IF YOU NEED MORE INFO.

cc: Ron Goard
Si Carn

GA PLS.

53(549,8/ 49',

TEKTRONIX ROSN.

Ans
Geo Muckenstrom 3)
~~F~~ used AN
515A mod 760A

d 760A

Geo Muckenstrom

navy got from GE Co.

Brooklyn Navy) and ~~the~~ groups studying
Ship board transients

300v to 2kv
doesn't know time duration

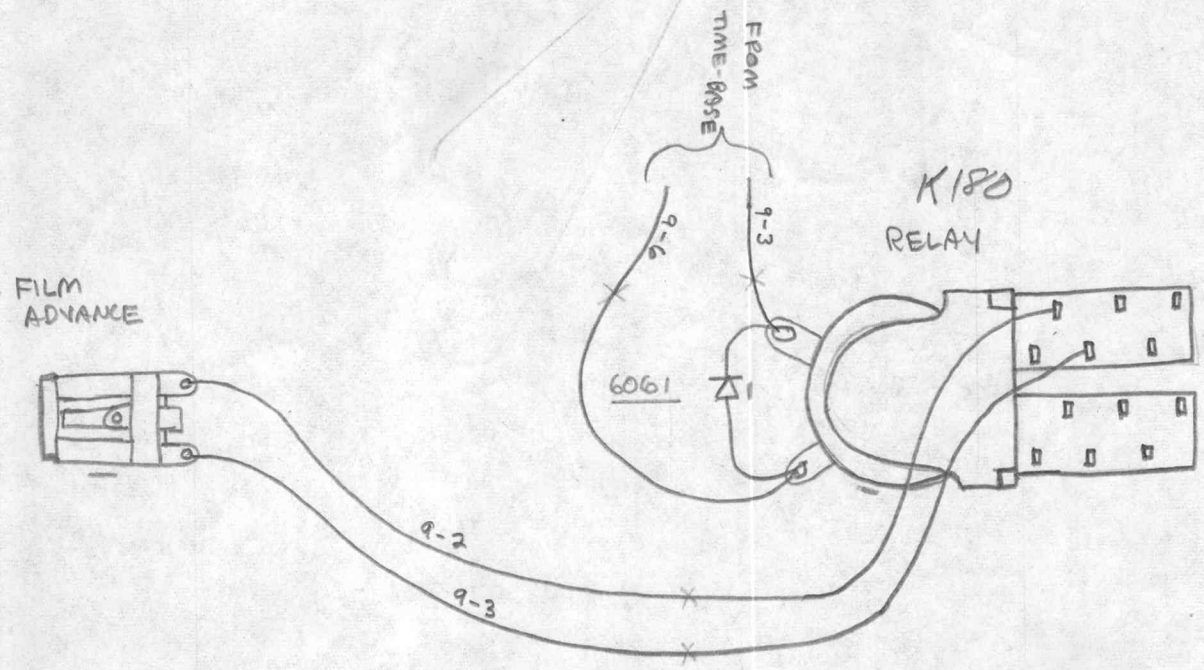

FILM ADVANCE RELAY

3

515A MOD 760C

790761

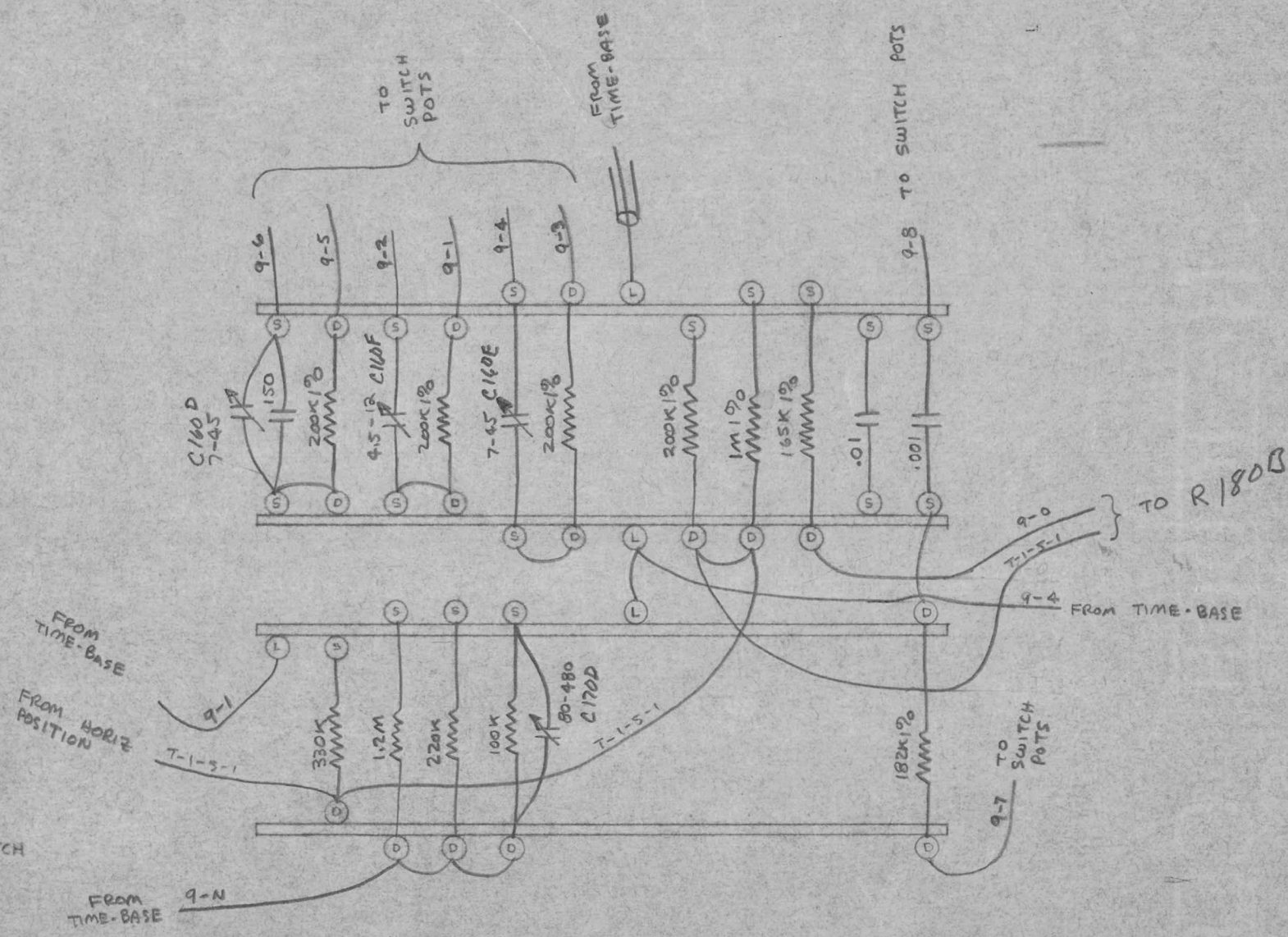

SWEEP DURATION SWITCH

515A mod 760 C
790761

4

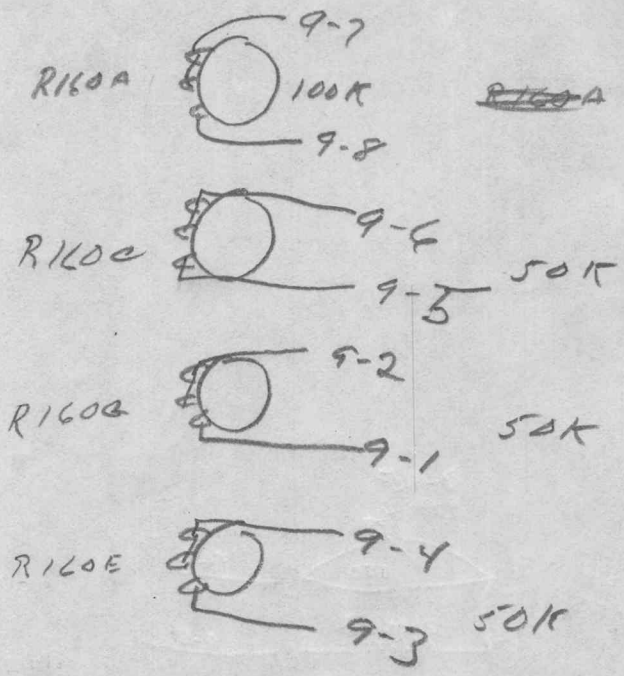
R160A
9-7
100K
9-8
~~R160A~~
R160C
9-6
9-5
50K
R160B
9-2
9-1
50K
R160E
9-4
9-3
50K

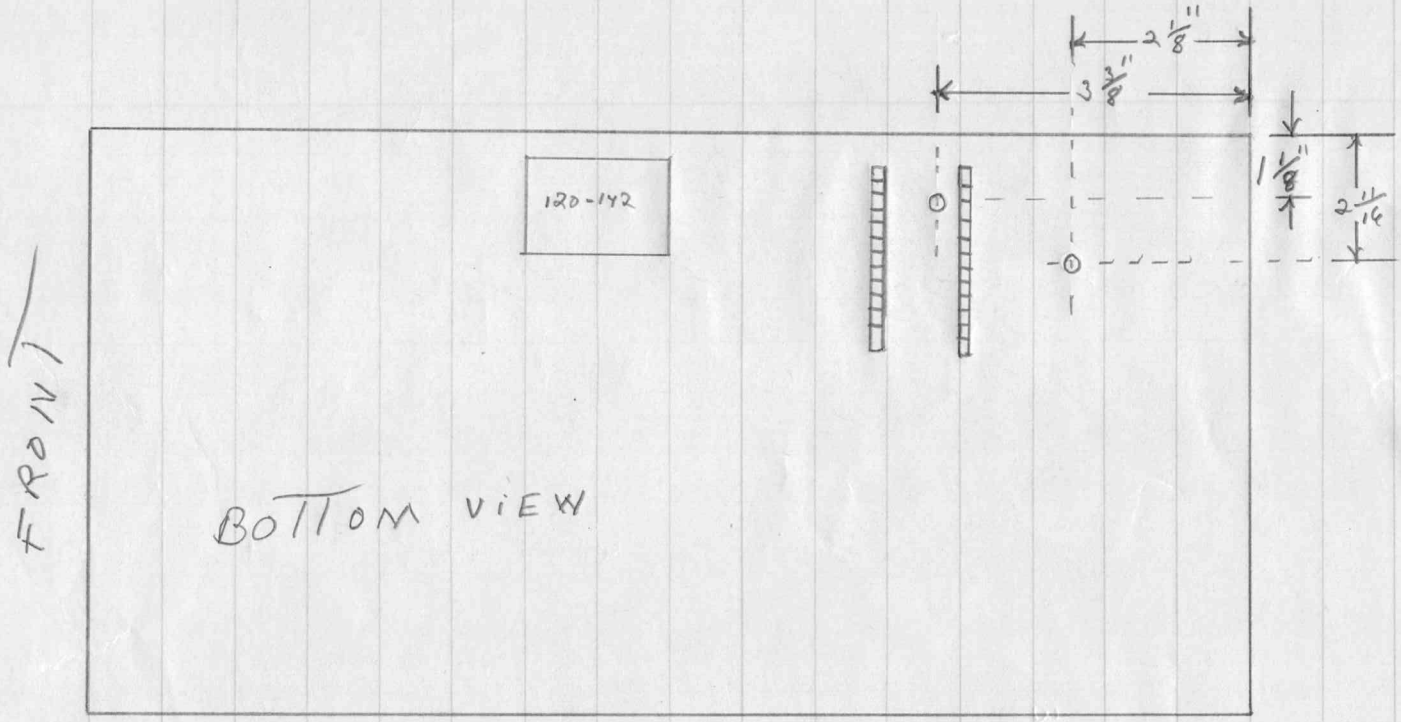
FRONT
BOTTOM VIEW
120-142
2 1/8"
3 3/8"
1 1/8"
2 1/16"

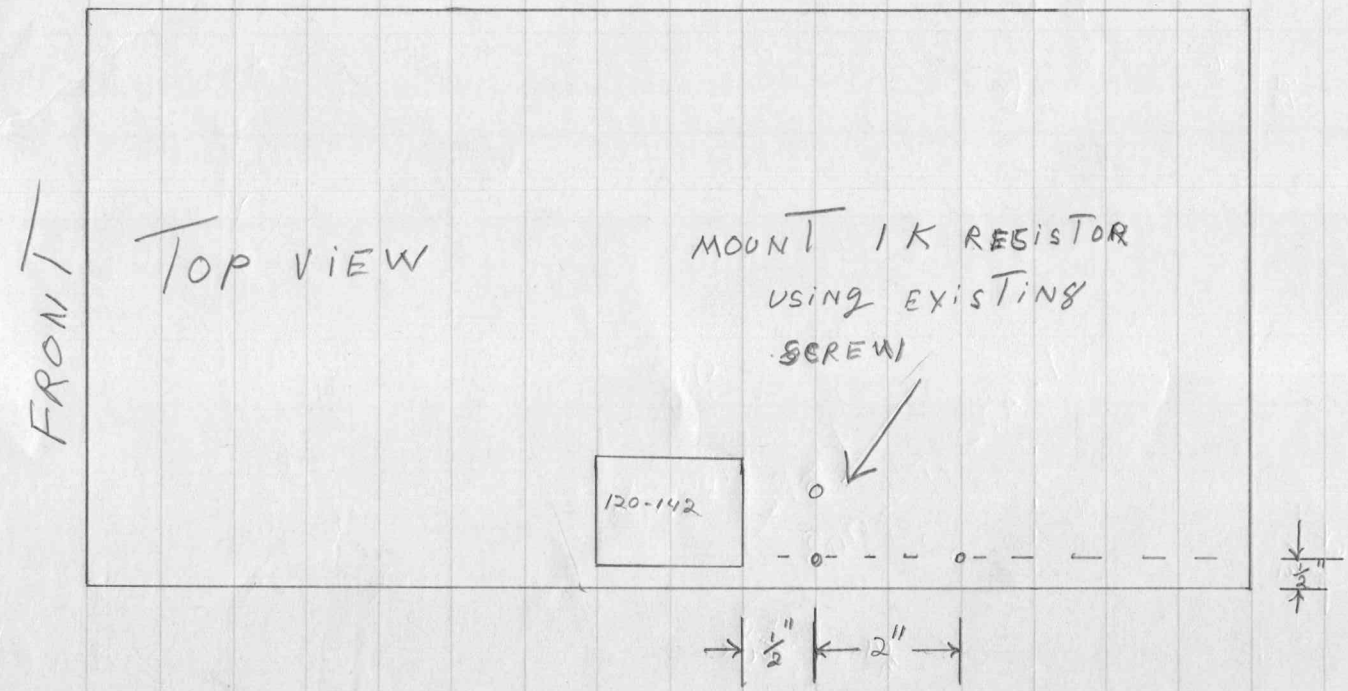
FRONT
TOP VIEW
MOUNT 1K RESISTOR
USING EXISTING
SCREW
120-142
1/2"
2"
1/2"

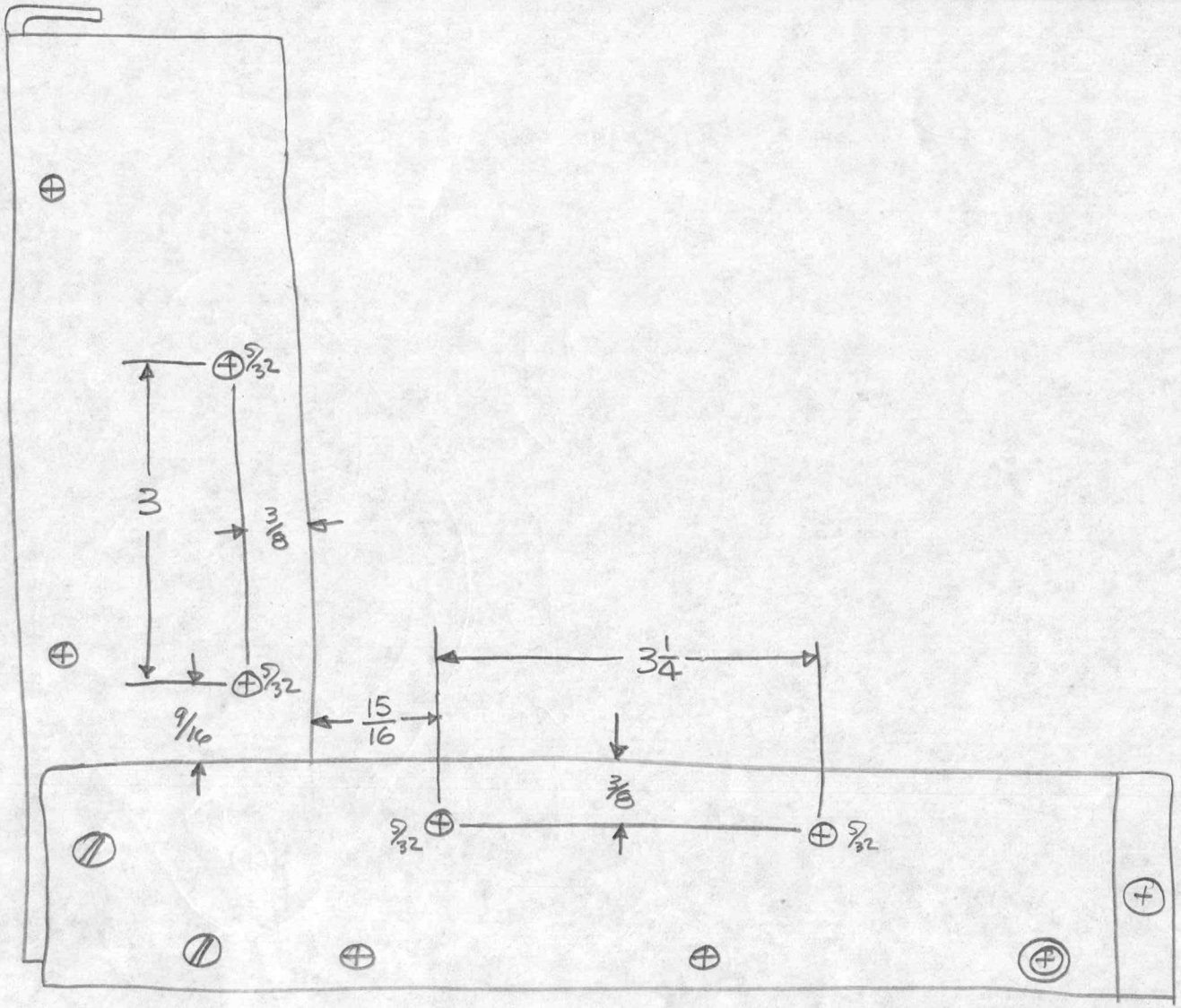

HOLES ADDED TO DELAY-LINE HOUSING

515 A MOD 760C 790761

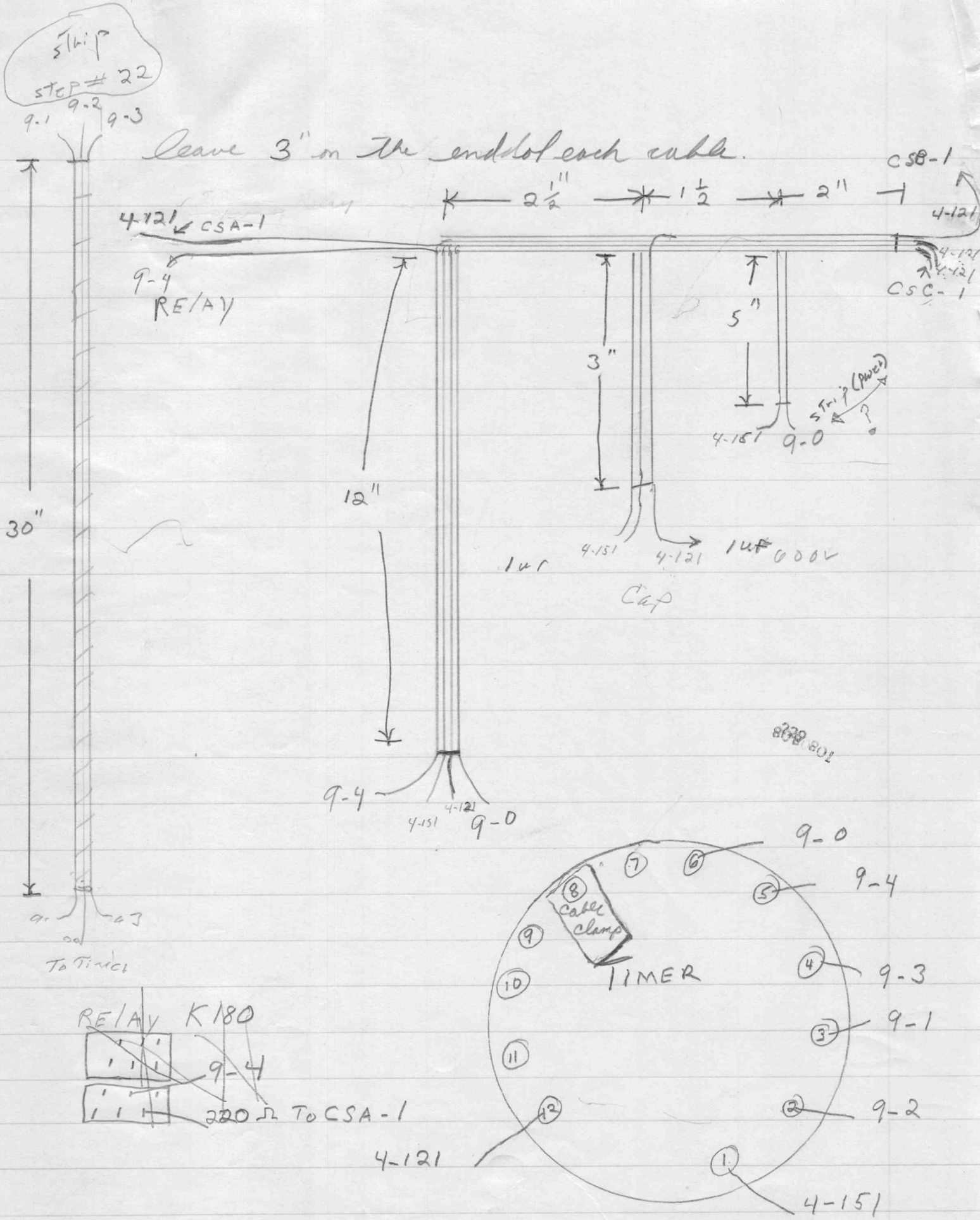
strip
step # 22
9-1
9-2
9-3
leave 3" on the end of each cable.
CSB-1
2 1/2"
1 1/2
2"
4-121
CSA-1
4-121
9-4
RELAY
CSC-1
5"
3"
strip (power)
4-151
9-0
12"
30"
4-151
4-121
1uf 600V
1uf
Cap
9-4
4-151
4-121
9-0
To Timer
9-0
9-4
cable clamp
TIMER
9-3
9-1
9-2
4-121
4-151
RELAY K180
9-4
220Ω To CSA-1

515 MOD 760 C H.V. CHANGE

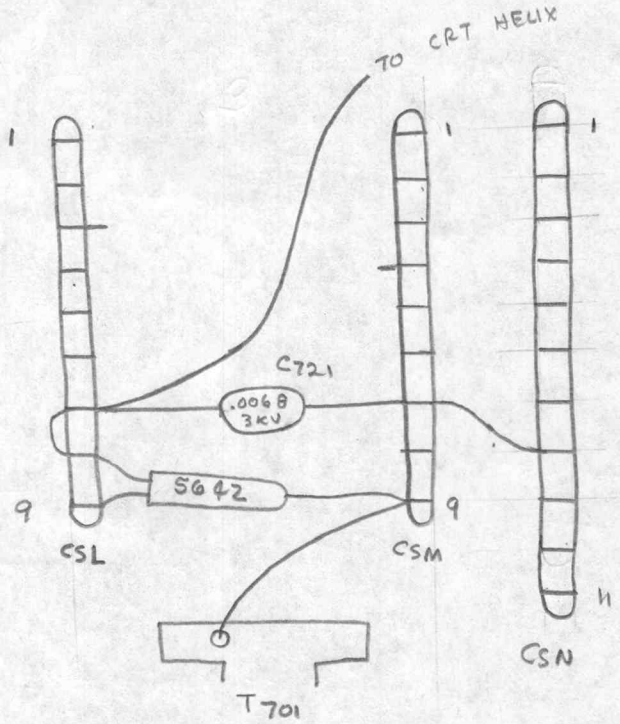

BEFORE

REMOVE

C721 .0068 3KV 283-043

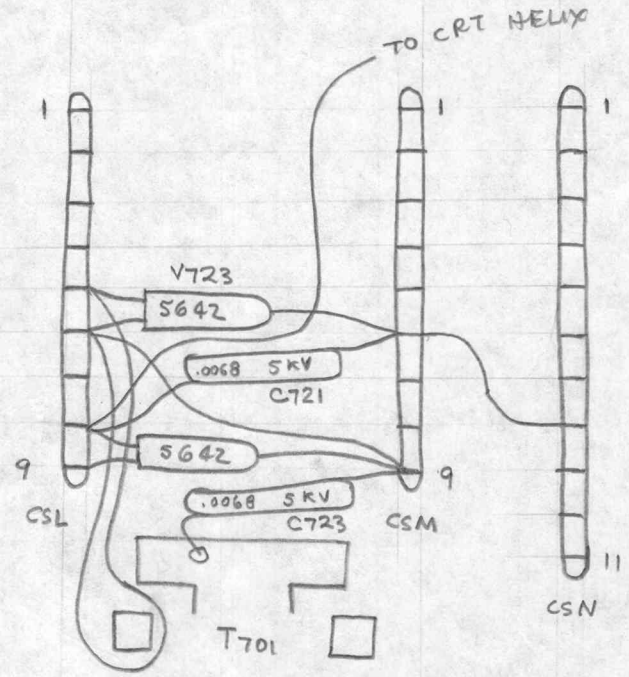

AFTER

ADD

C723	.0068	5KV	283-071
C721	.0068	5KV	283-071
V723	5642		154-051

515A MOD 760C 790761

1	SPECIAL	P.B. ML17D 4PDT 10K COIL RELAY
1	285-501	.001 µf 600V
1	285-515	.022 µf 400V
1	290-145	10 µf 50V
1	301-302	3K ½w 5%
1	302-153	15K ½w 10%
1	302-223	22K
1	302-103	10K
1	302-106	10M
1	302-104	100K
1	302-393	39K 1w
1	302-473	47K
2	152-061	6061 DIODES
1	331-051	.185 CM N.V. GRATICULE

515A MOD 760 C 790761

S	1	311-026	100K POT	(TRIG. LEVEL)
	1	302-334	330K ½W 10%	
	1	302-821	820Ω	
	1	302-222	2.2K	
	1	302-392	3.9K	
	1	302-103	10K	
	1	302-474	470K	
	3	316-336	33M ¼W 10%	
	1	285-510	.01μf 400V	
	1	311-018	20K POT	(HORIZ. POS.)
	1	323-396	130K ½W 1%	
	1	281-007	3-12 PF	
	1	124-088	4 NOTCH ¾ STRIP	
	1	124-090	9 " " "	
V	1	302-270	27Ω ½W 10%	
V/S	2	302-103	10K	
S	1	302-225	2.2M	
	1	302-105	1M	
	2	302 562	5.6K	
	2	152-008	T12G	
	2	283-000	.001μf 500V DISC	
	2	283-001	.005μf 500V	
	1	311-023	50K POT	(500μS TIME)
	1		POT BRACKET	

515A MOD 760C 790761

SWEEP DURATION SWITCH

1	031-00 -00	SWEEP SWITCH
1	281-010	4.5-25 PF VARIABLE
2	281-012	7-45 PF VARIABLE
1	~~281-544~~	150PF 10% MICA
1	285-665	.001 µf TEK
1	285-664	.01 µf TEK
1	302-334	330K ½W 10%
1	323-406	165K ½W 1%
4	323-414	200K
1	323-410	182K
1	323-481	1M
1	311-157	100K POT
3	311 329	50K
1	302-125	1.2M ½W 10%
1	302-224	220K
1	302-104	100K
1	281-044	80-480 VARIABLE
1	not Orbit	

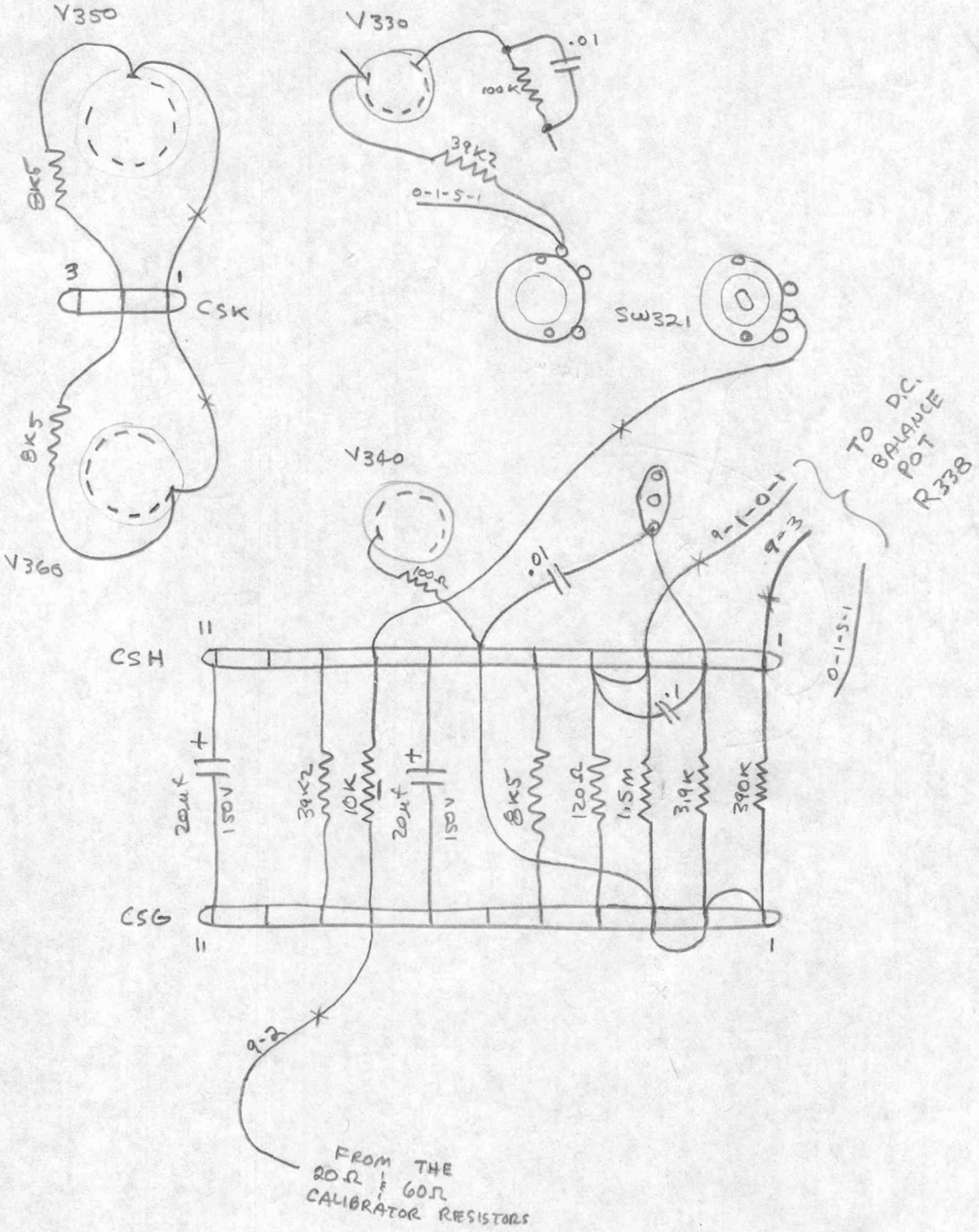

VERTICAL AMPLIFIER

515A MOD 760C 790761

AFTER

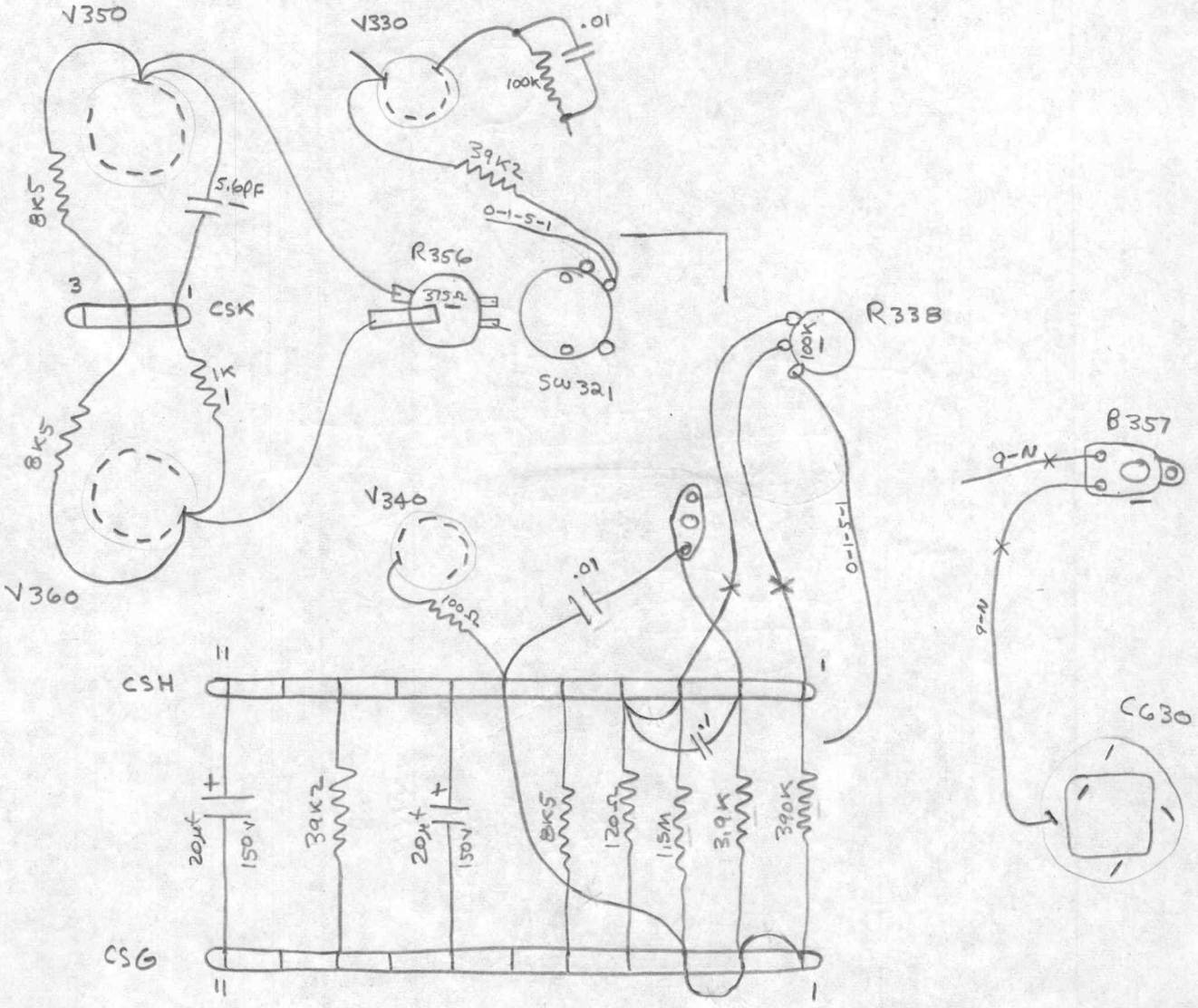

VERTICAL AMPLIFIER

515A MOD 760C 790761

BEFORE

7907C01 515A MOD 760C VERTICAL AMPLIFIER

TRIGGER PICK-OFF

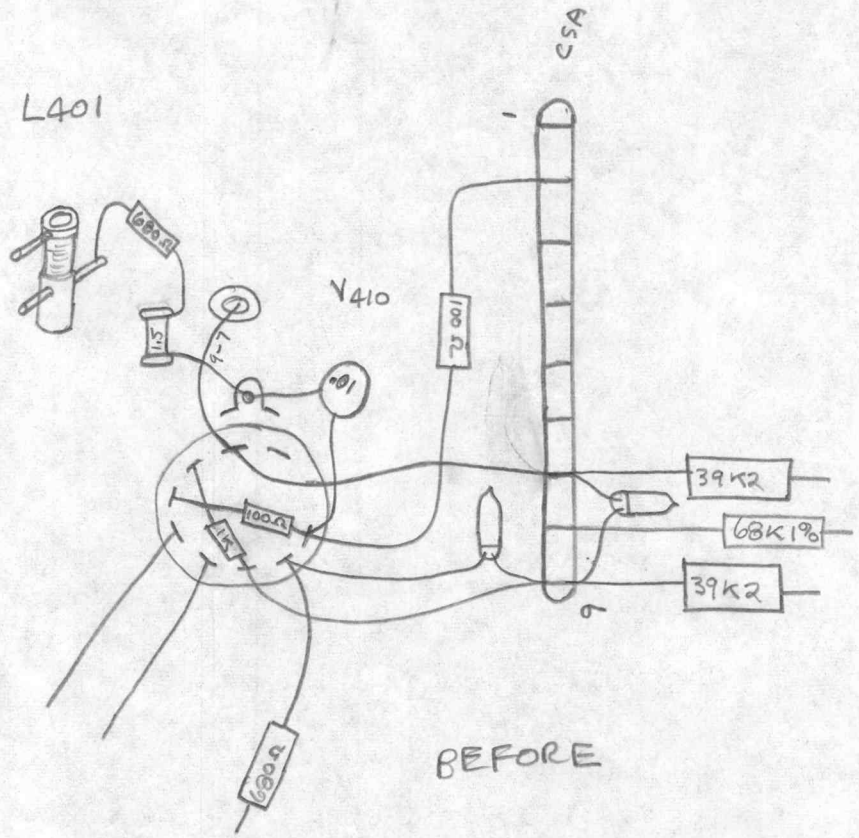

BEFORE

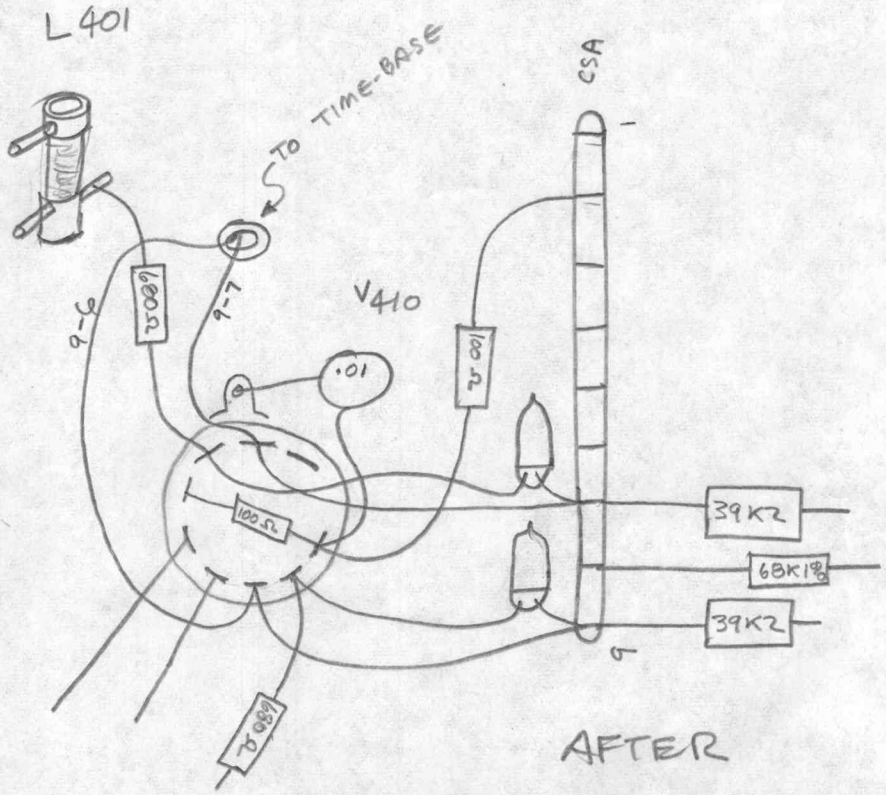

AFTER

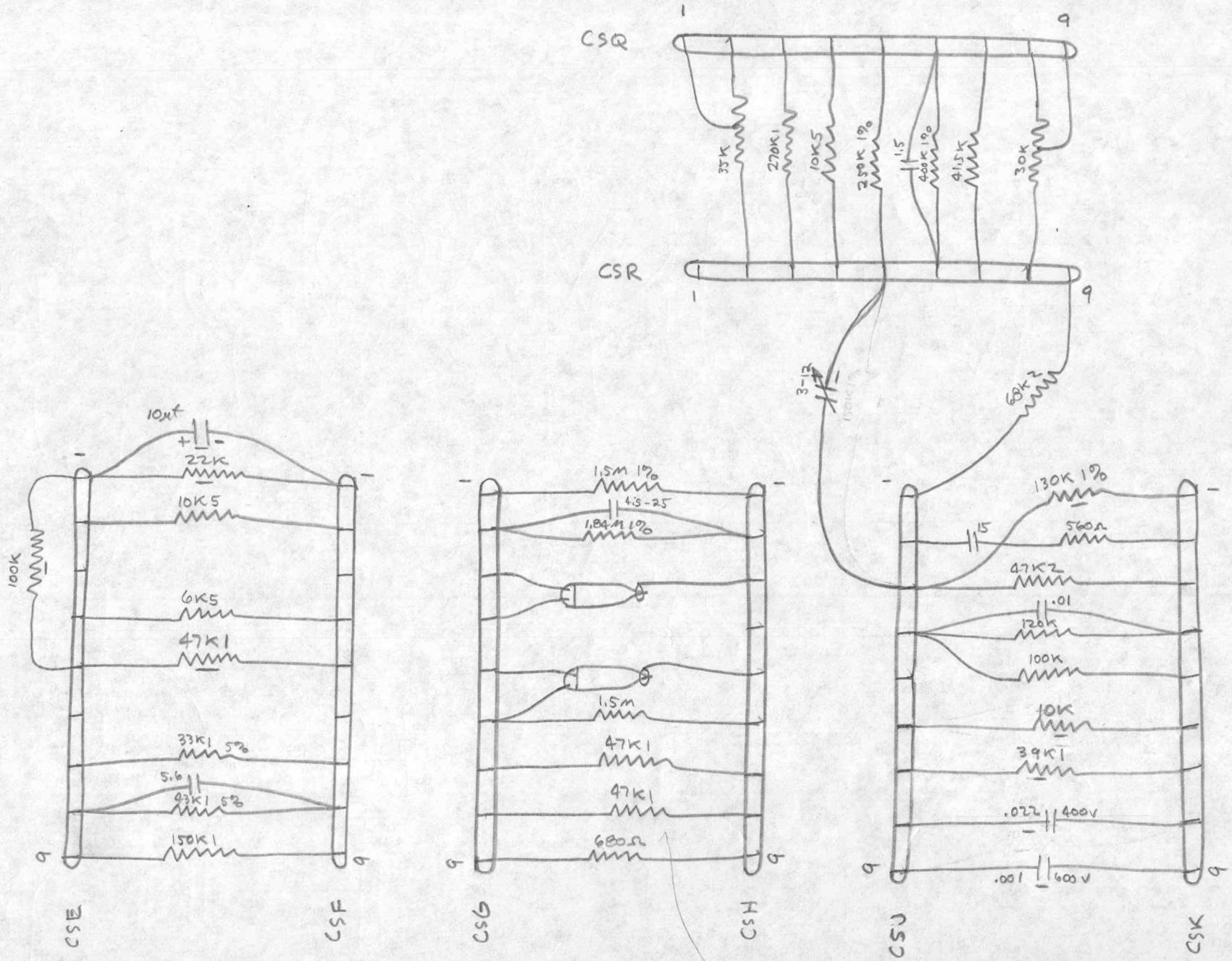

TIME-BASE

515A MOD 760C AFTER

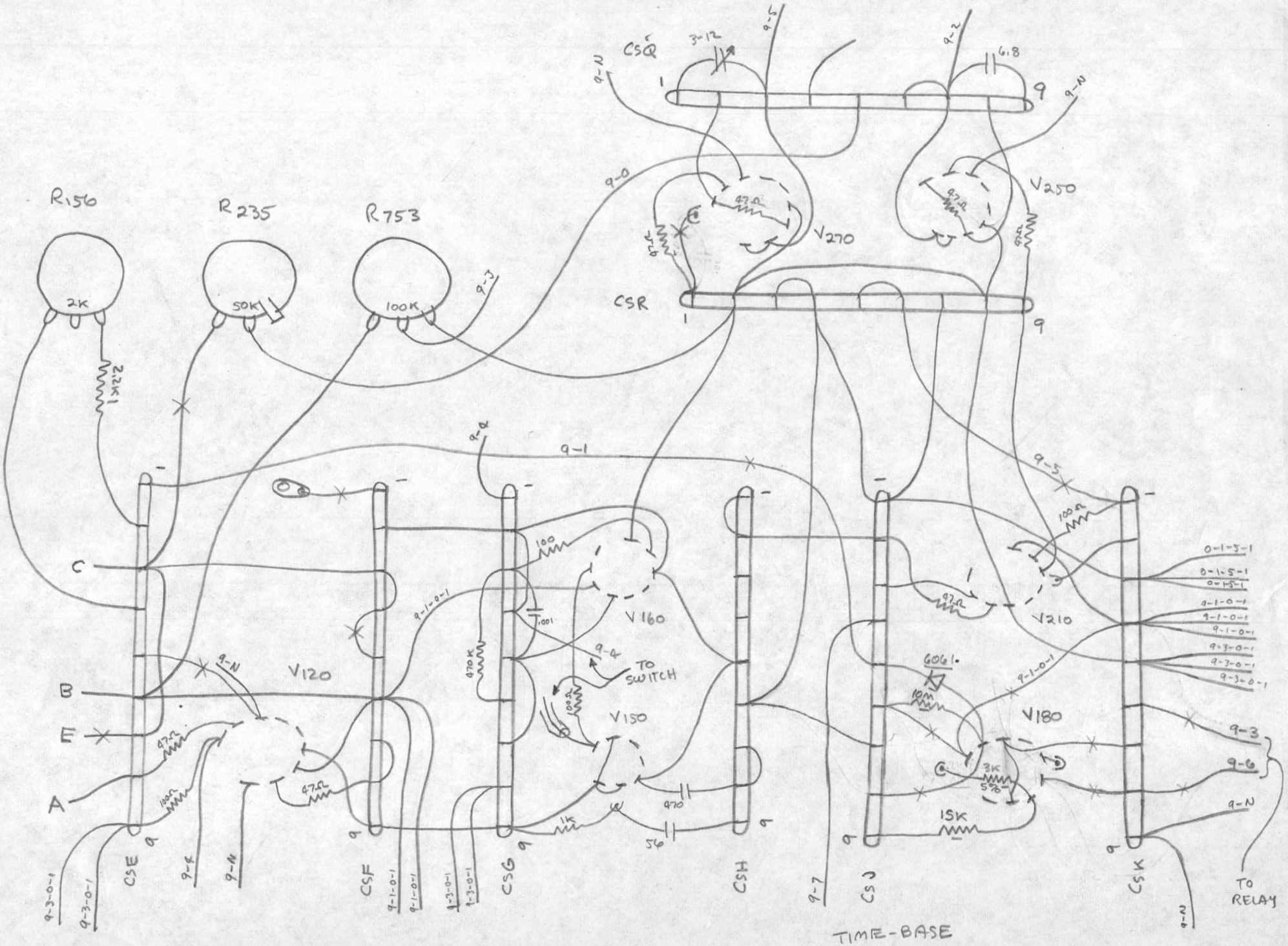

515A MOD 760 C AFTER

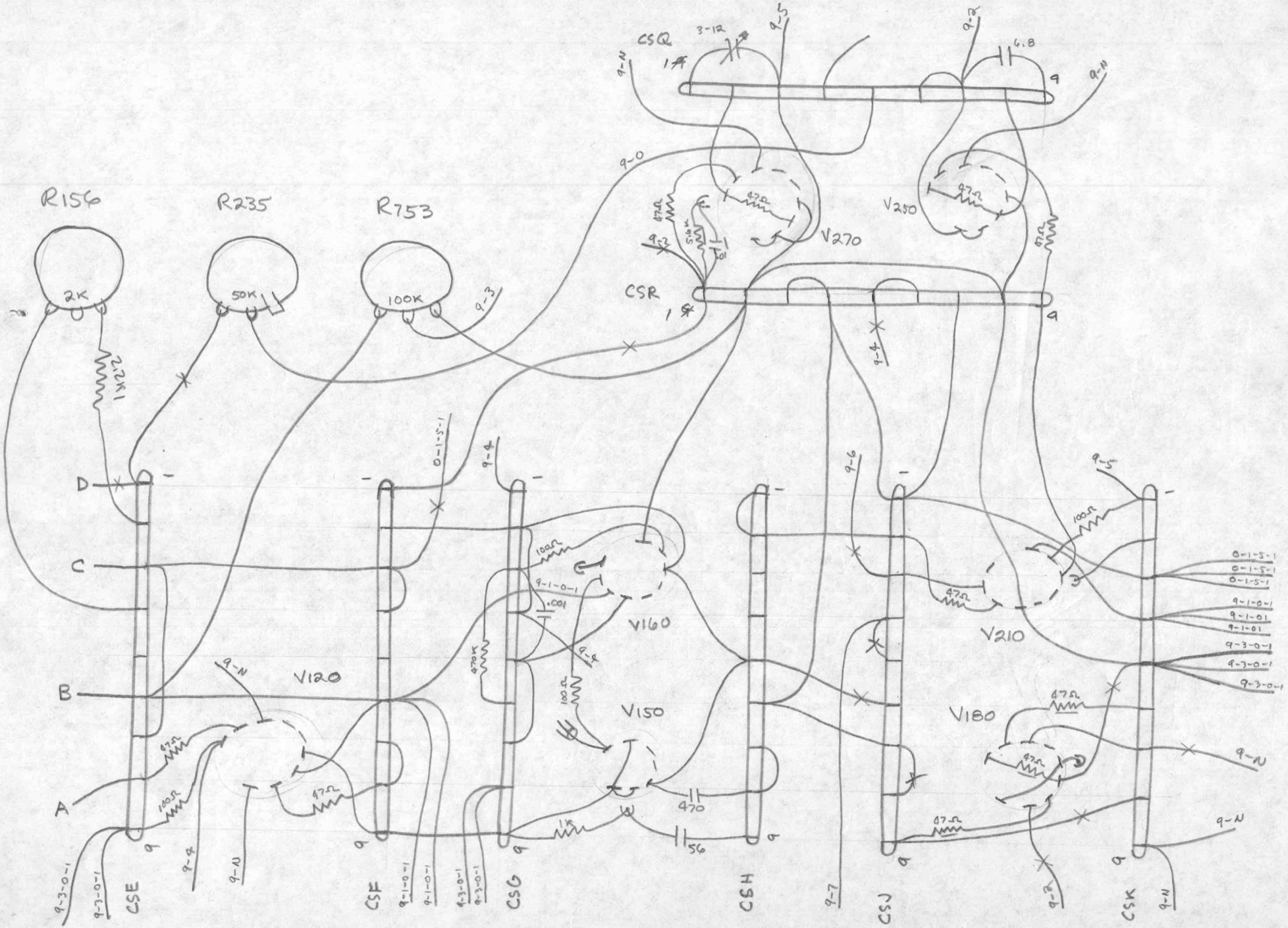

TIME-BASE

515A MOD 760C BEFORE

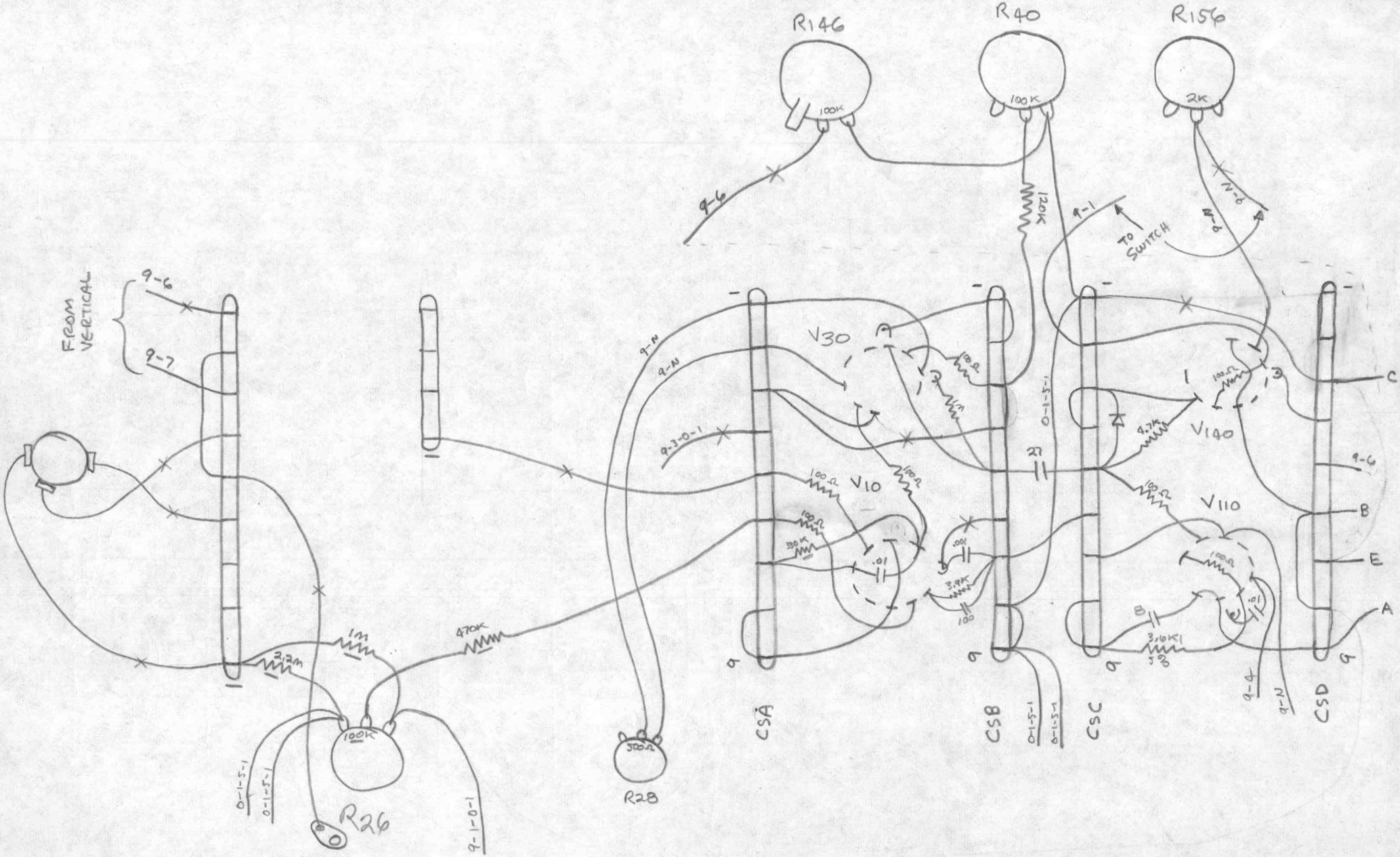

TIME-BASE 2

515A MOD 760C AFTER

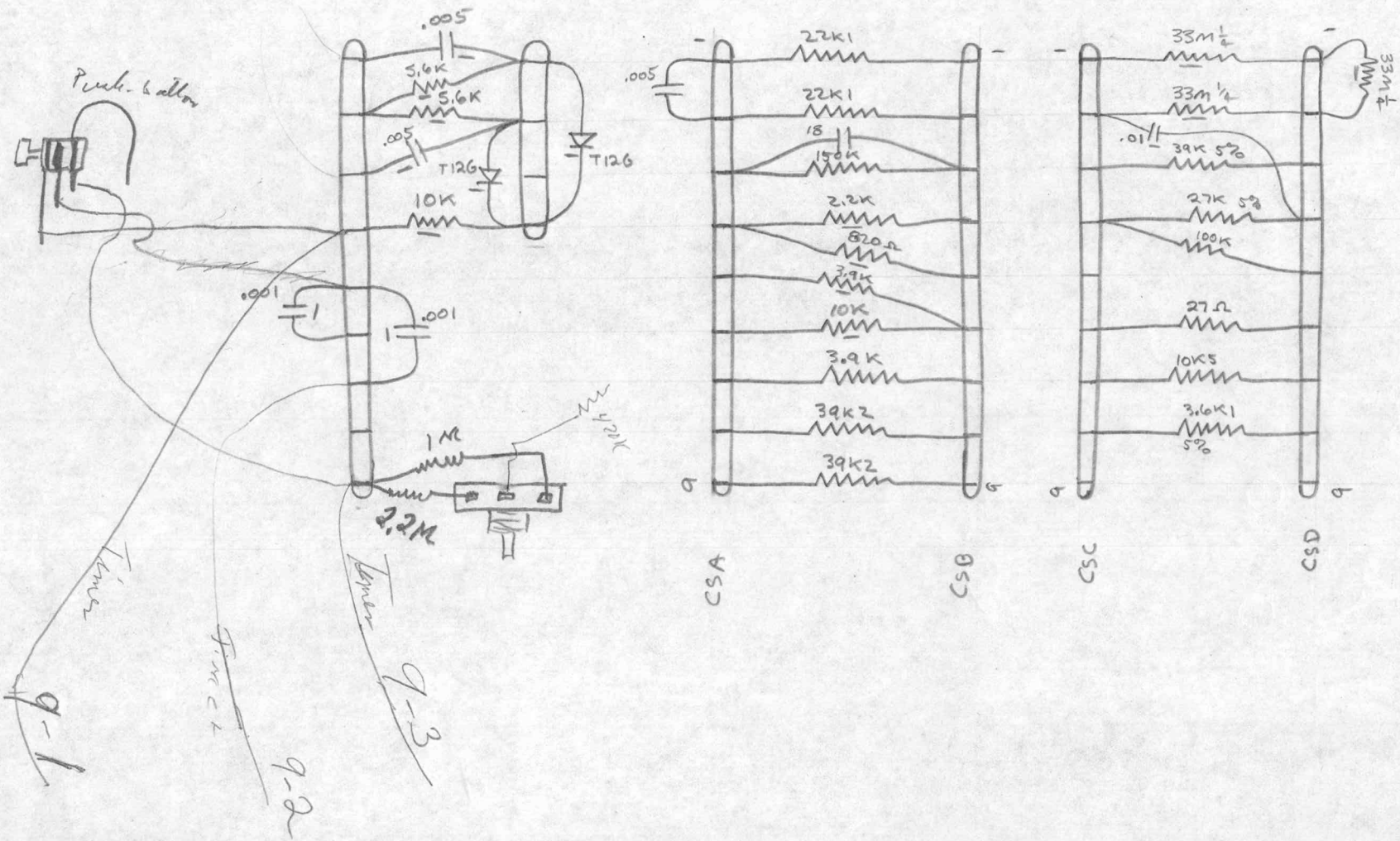

TIME-BASE

515A MOD 760C

AFTER

1

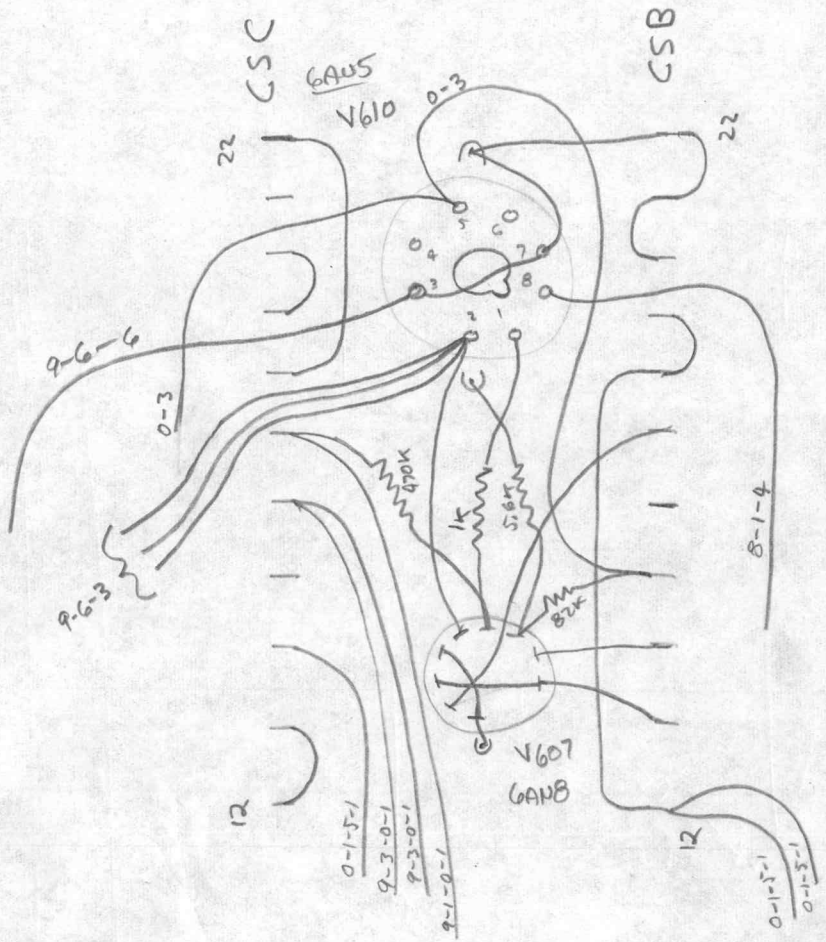

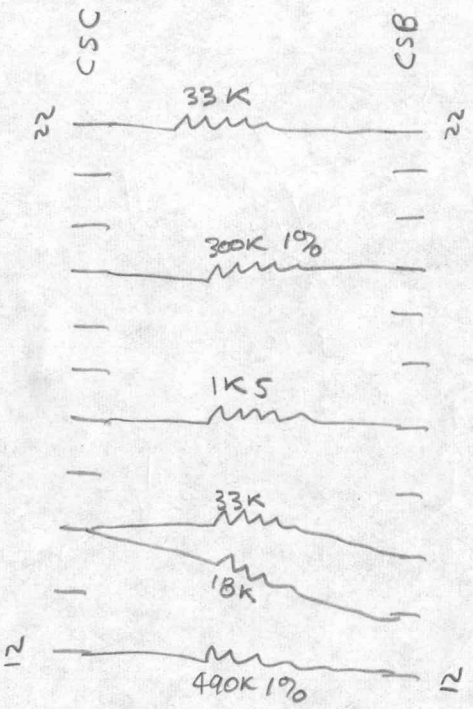

POWER SUPPLY

515A MOD 760C 790761

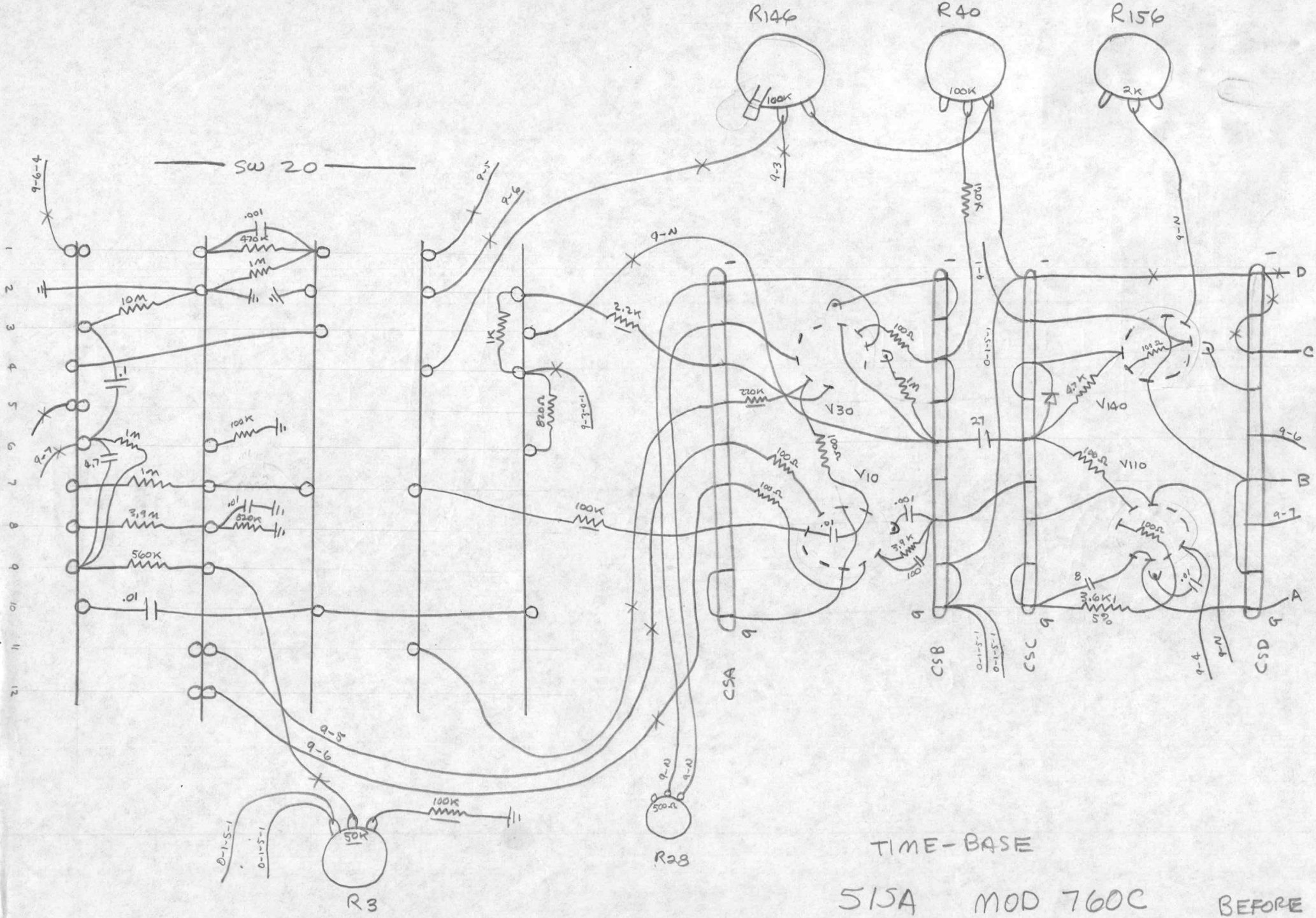
R146
R40
R156
SW 20
R3
R28
CSA
CSB
CSC
CSD
V10
V30
V110
V140
TIME-BASE
515A MOD 760C
BEFORE

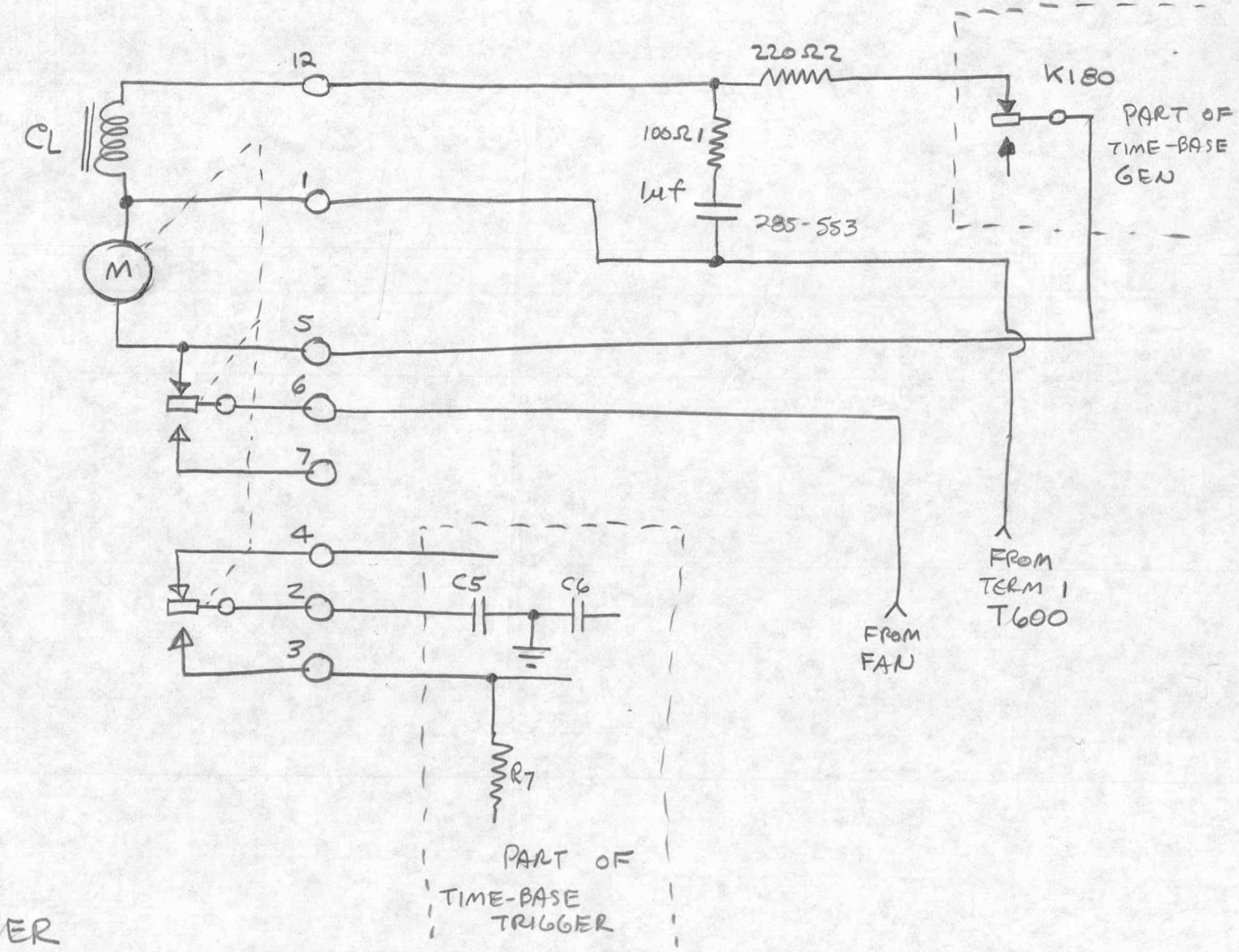

RESET TIMER

515A MOD 760 C

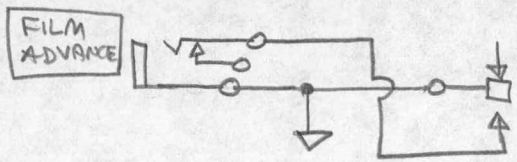

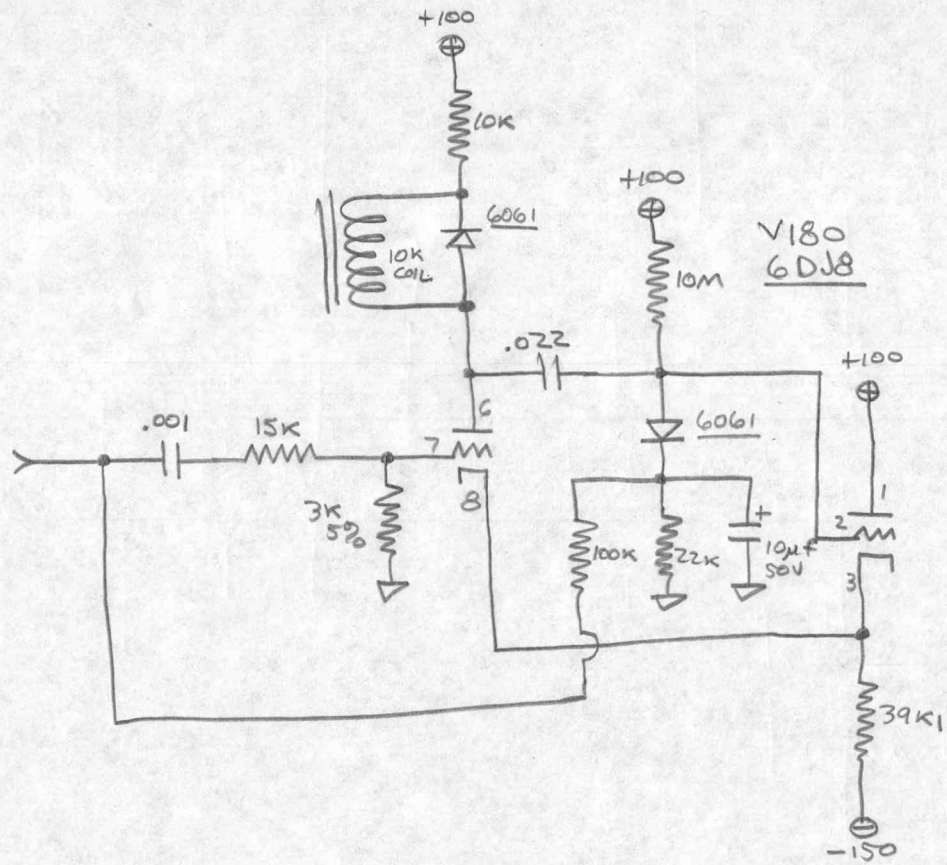

515A MOD 760C

FILM ADVANCE RELAY

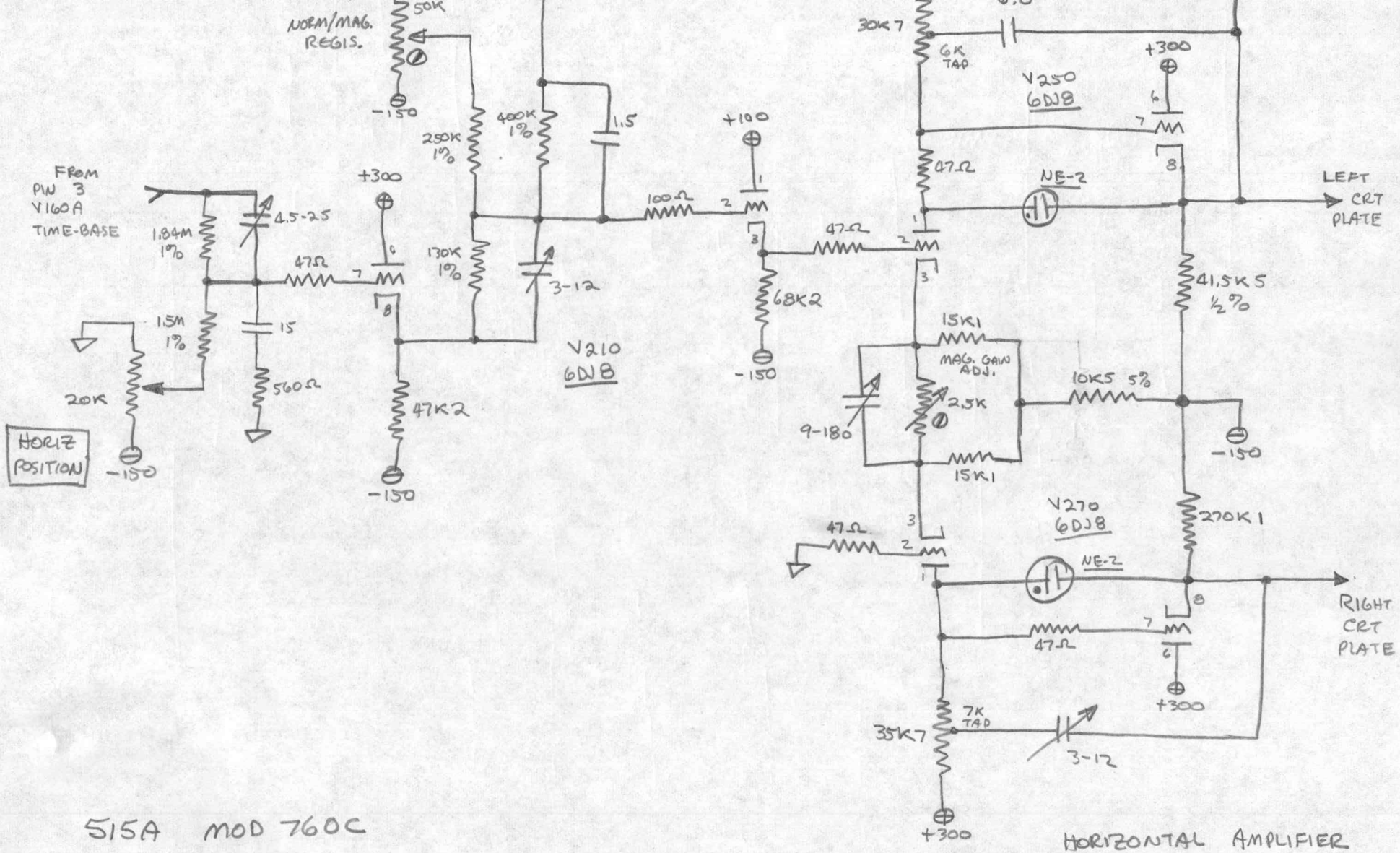

515A MOD 760C

HORIZONTAL AMPLIFIER

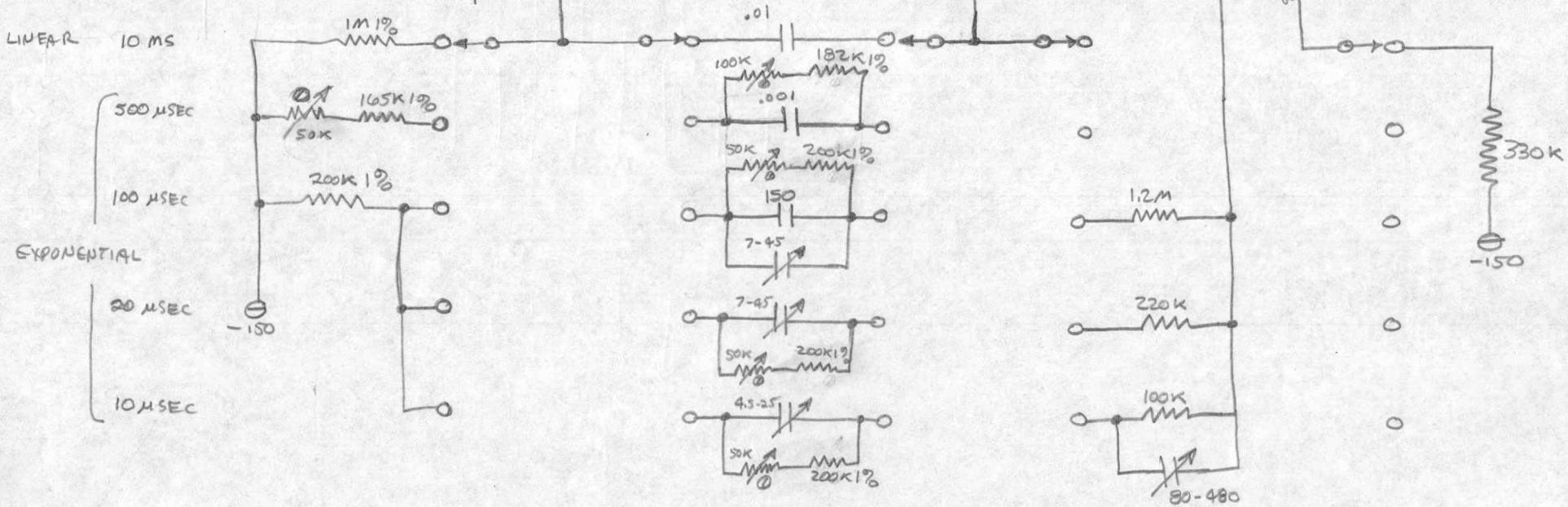

SWEEP DURATION SWITCH

(REPLACEMENT FOR 262-182)

30° INDEX

TYPE F

515A MOD 760C

790761

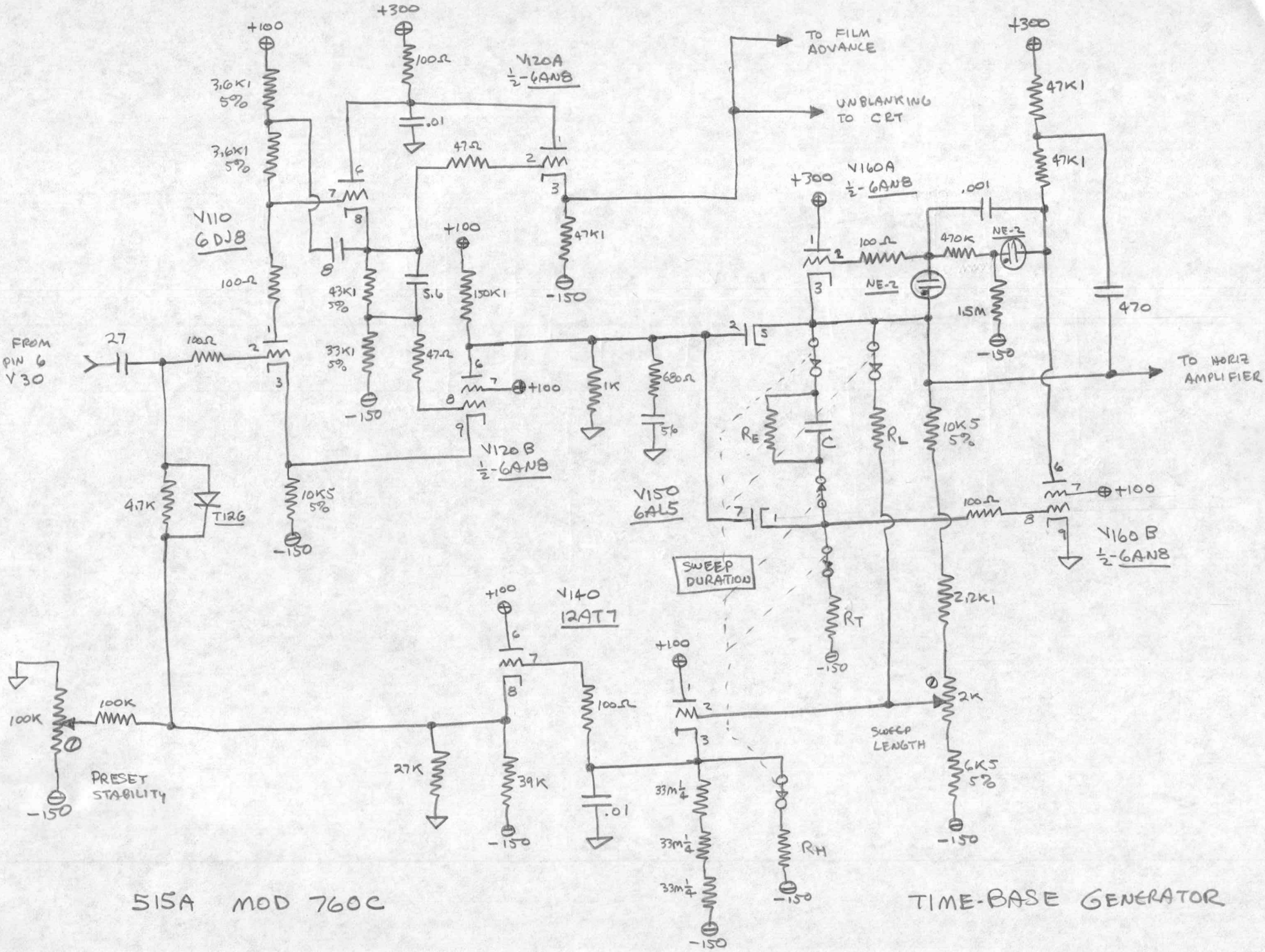

515A MOD 760C

TIME-BASE GENERATOR

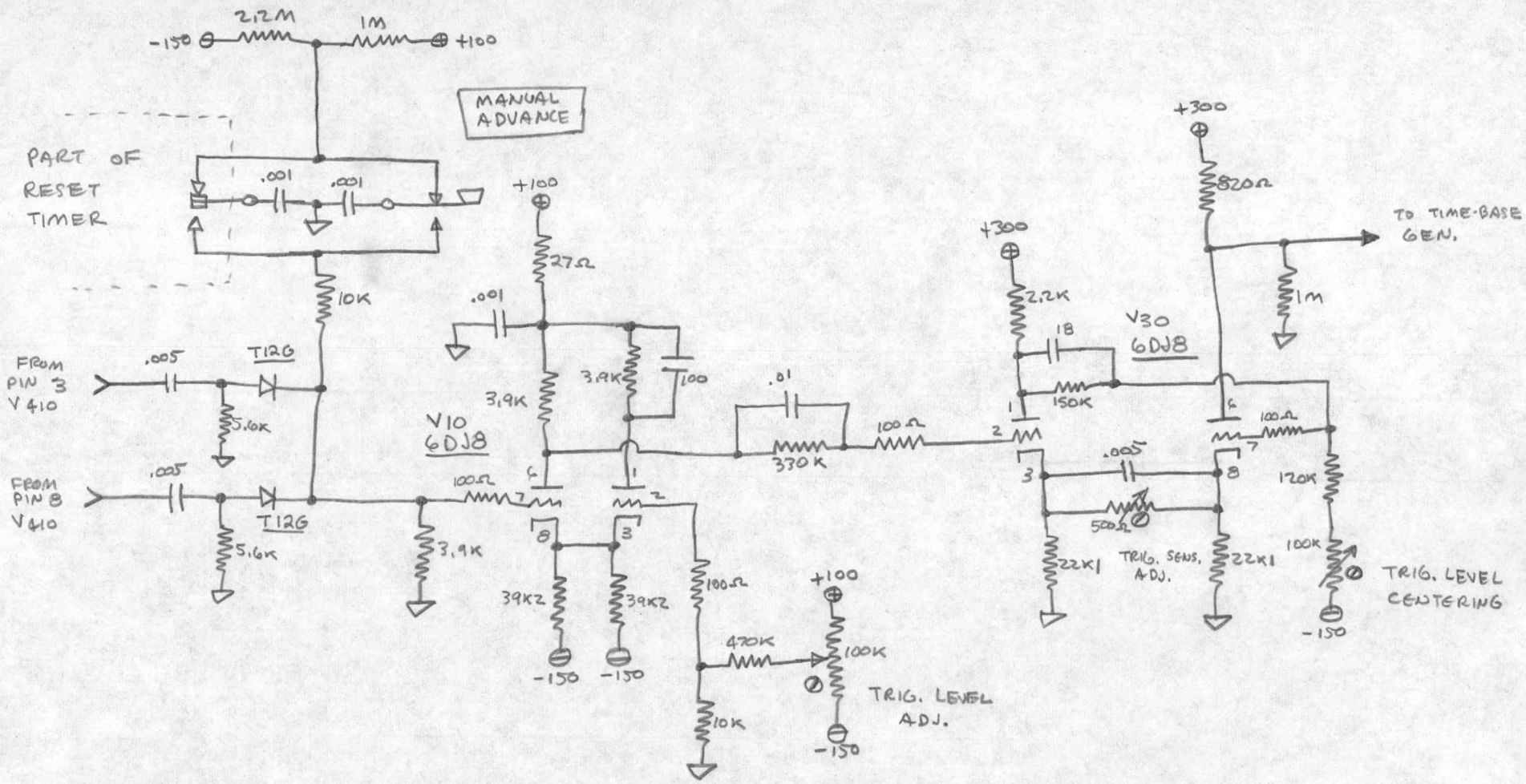

515A MOD 760C

TIME-BASE TRIGGER

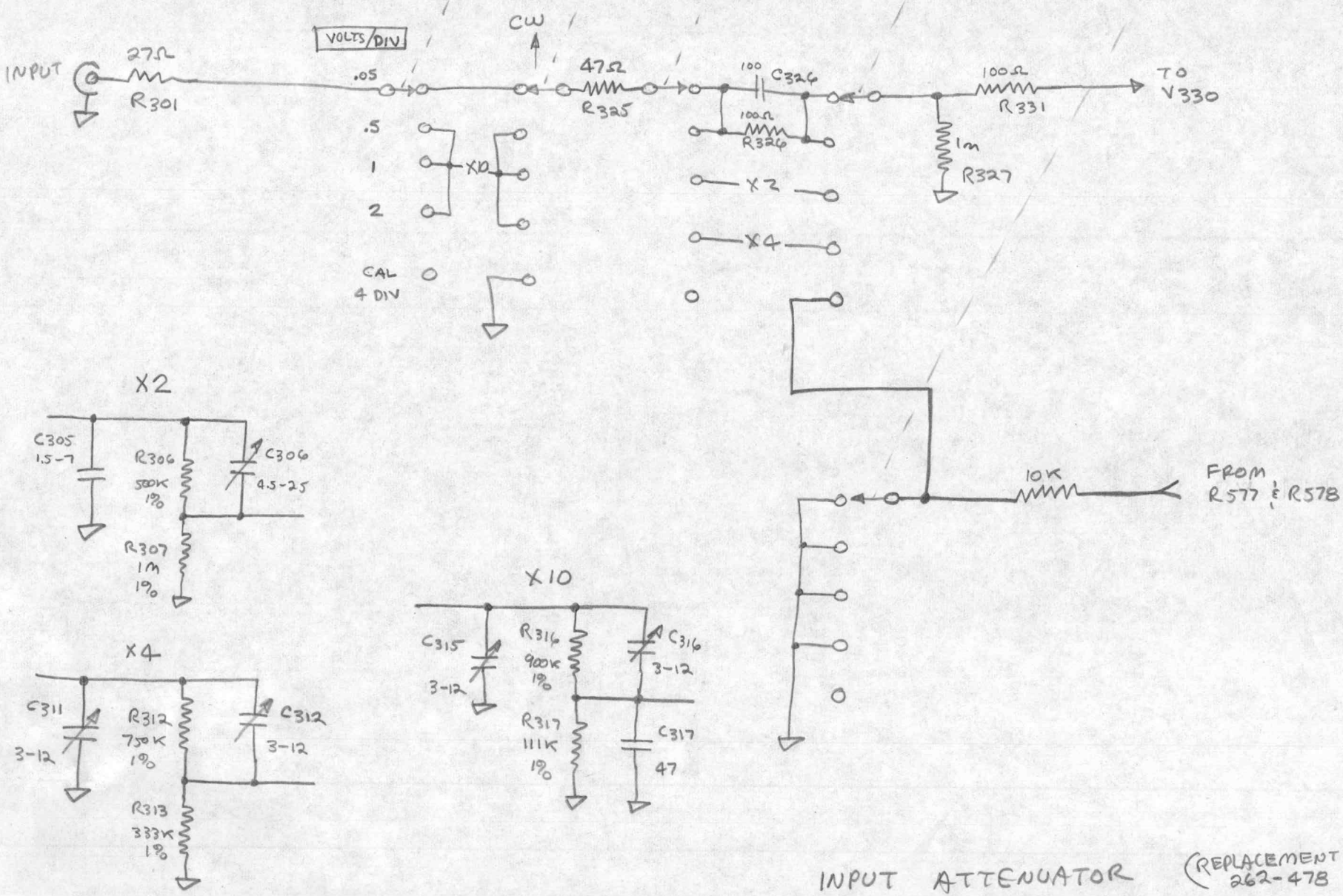

30° INDEX

INPUT ATTENUATOR (REPLACEMENT FOR 262-478)

515A MOD 760 C

790761

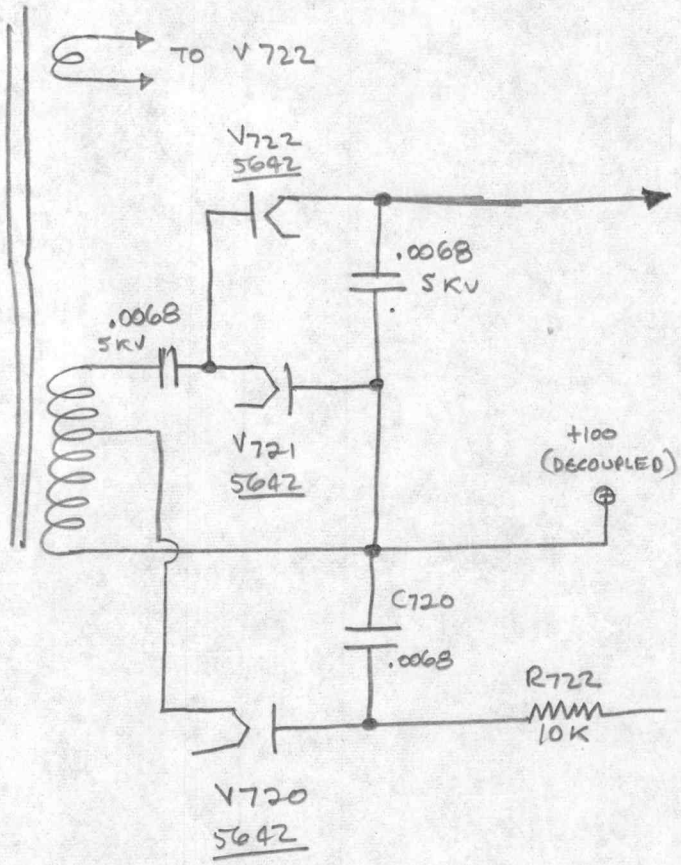

515A MOD 760C CRT CIRCUIT

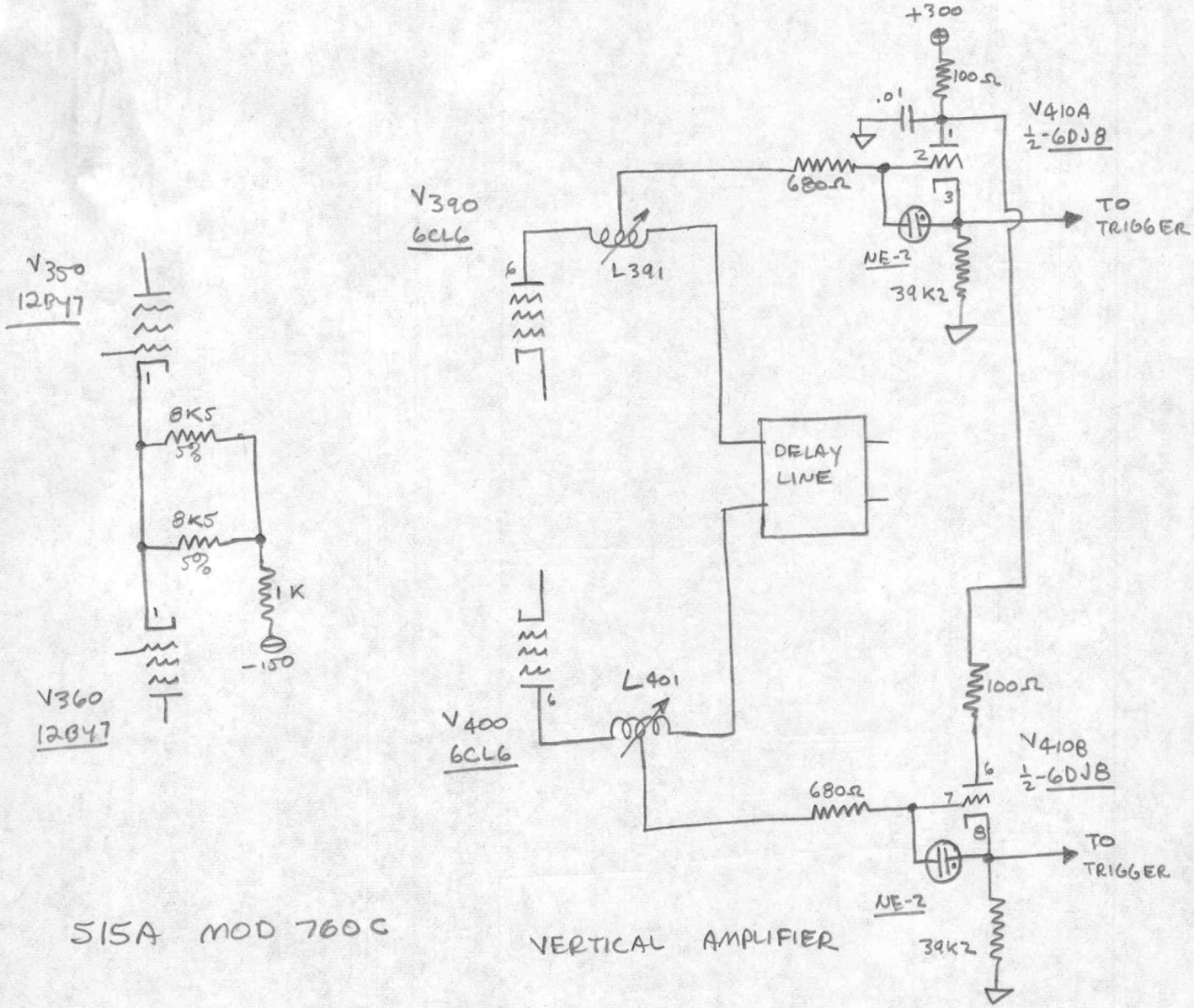

515A MOD 760C

VERTICAL AMPLIFIER

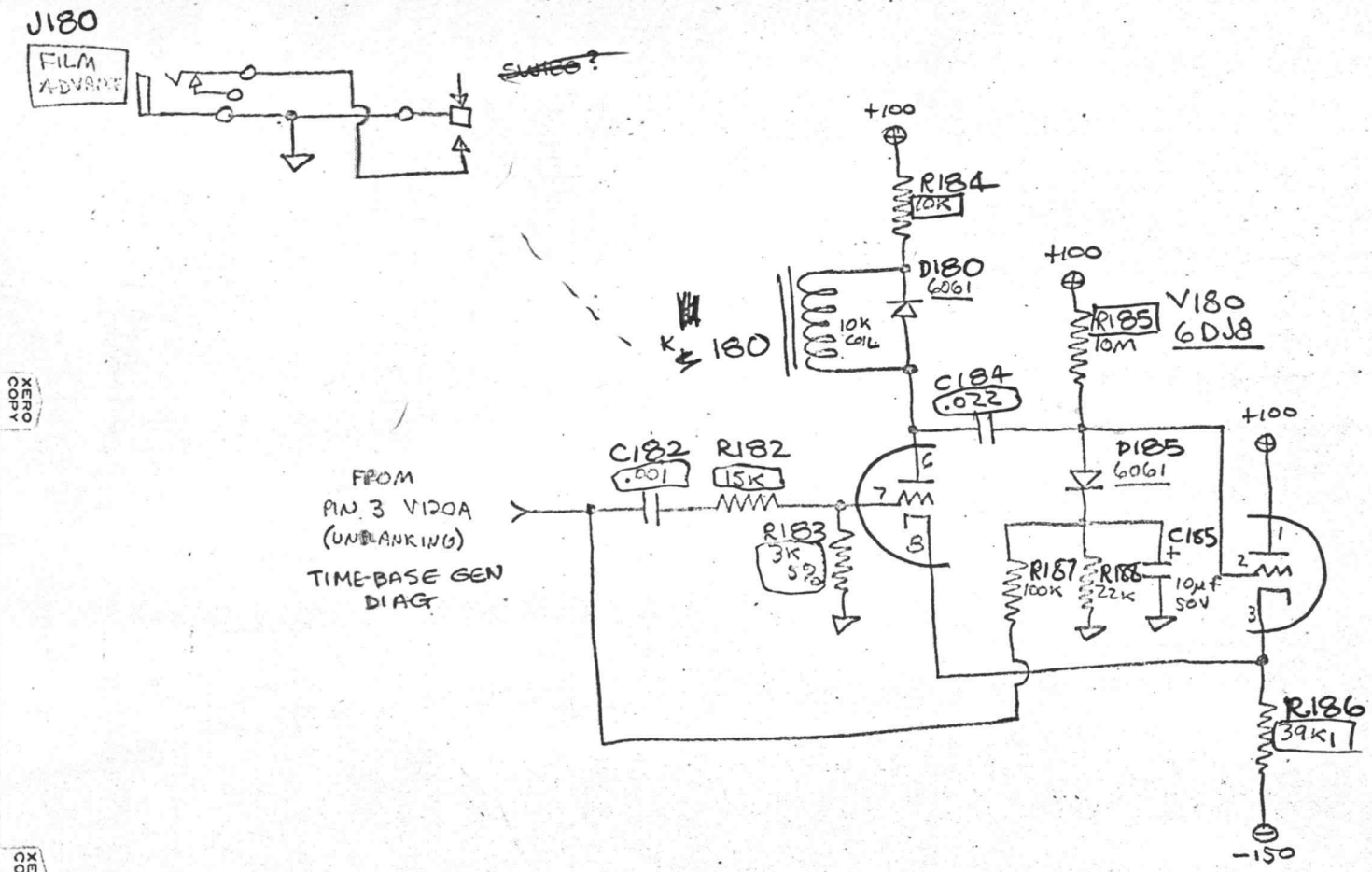

515A MOD 760C

FILM ADVANCE RELAY

515A MOD 760C

79 0761

①

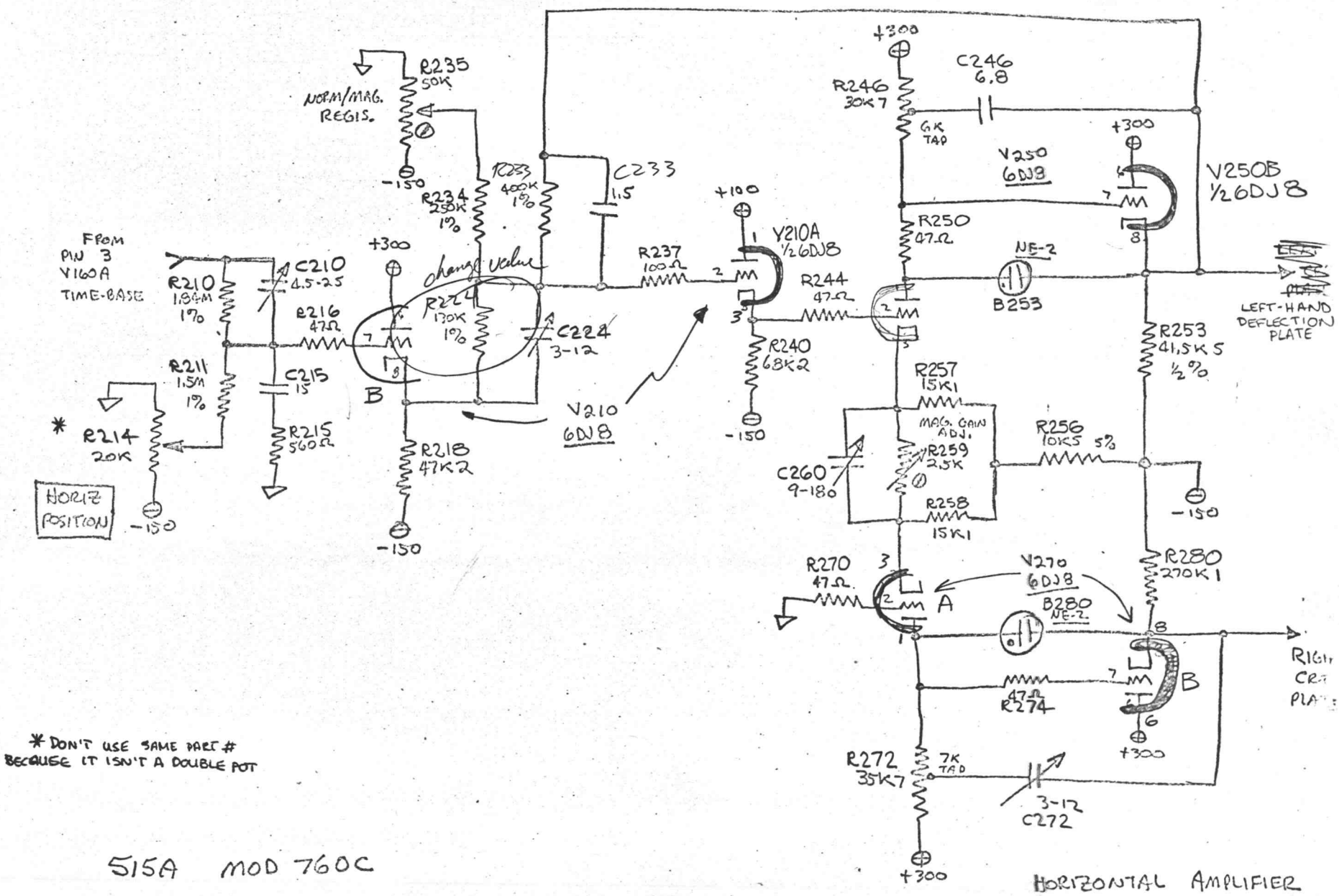

* DON'T USE SAME PART # BECAUSE IT ISN'T A DOUBLE POT

515A MOD 760C

HORIZONTAL AMPLIFIER

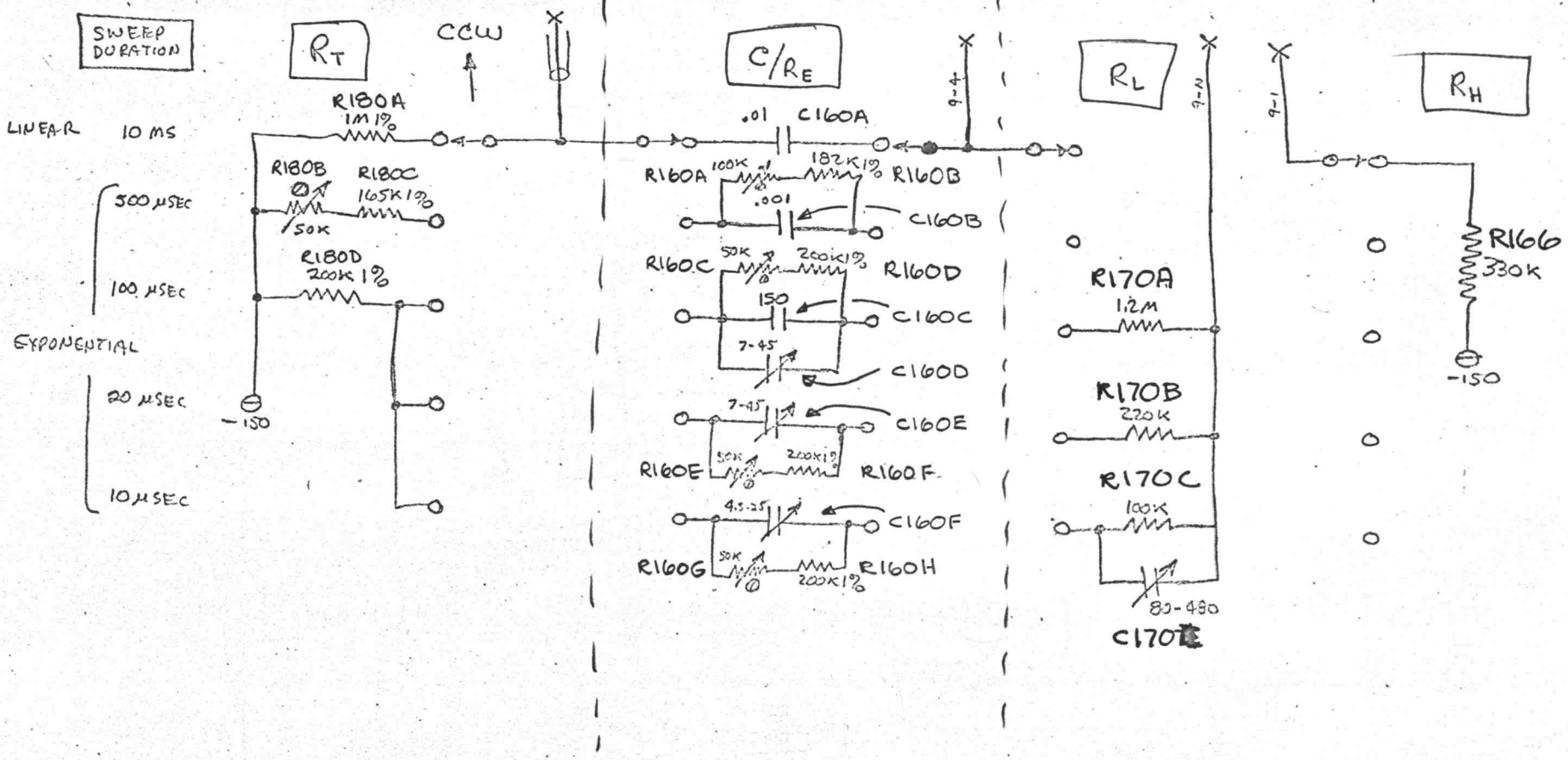

SWEEP DURATION SWITCH

(REPLACEMENT FOR 262-182)

30° INDEX

TYPE F

515A MOD 760C

790761

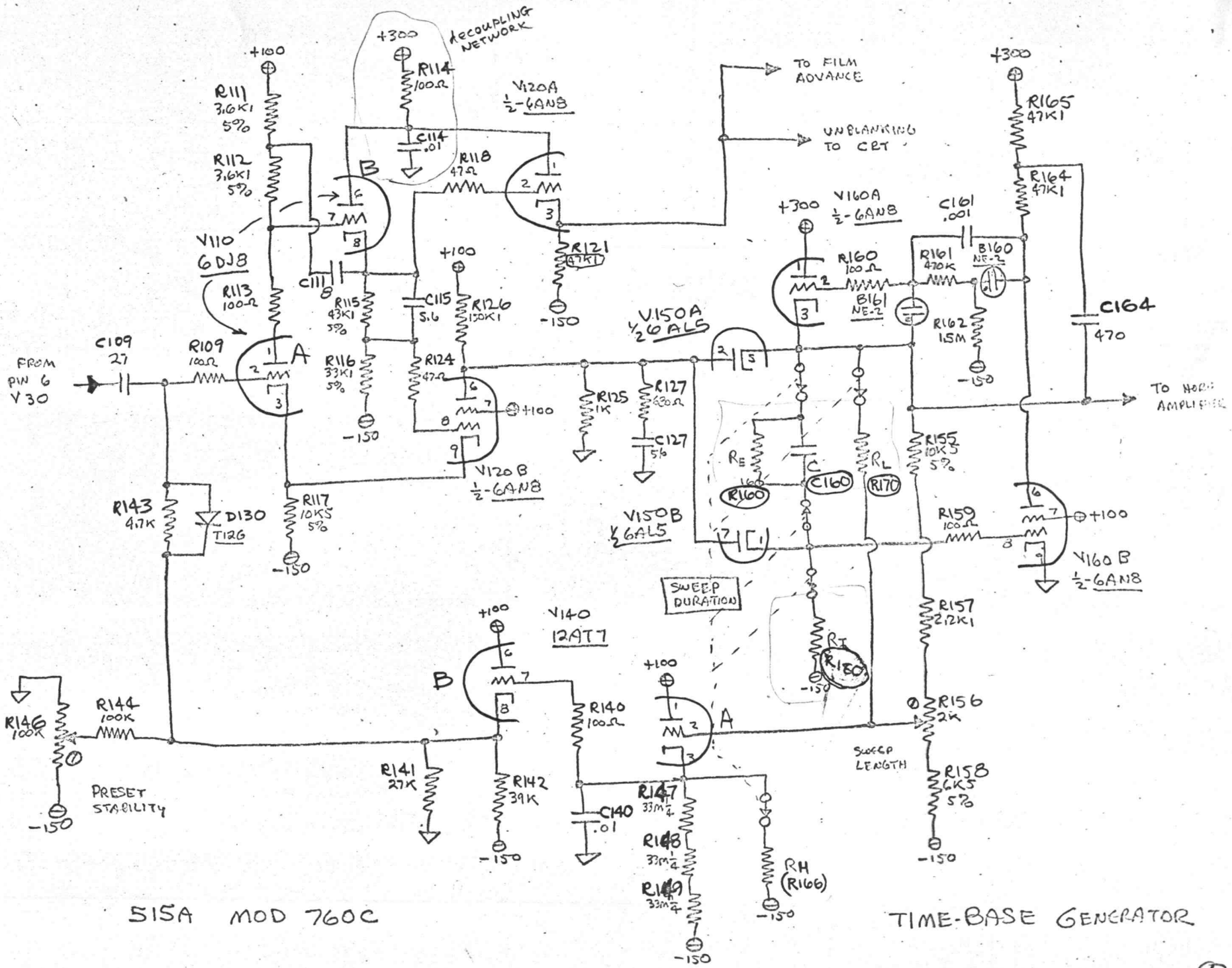
+300
DECOUPLING NETWORK
R114 100Ω
C114 .01
+100
R111 3.6K1 5%
R112 3.6K1 5%
V110 6DJ8
R113 100Ω
C111 8
R115 43K1 5%
R116 33K1 5%
-150
C115 5.6
R118 47Ω
V120A ½-6AN8
R121 47K1
TO FILM ADVANCE
UNBLANKING TO CRT
R126 150K1
R124 47Ω
V120B ½-6AN8
FROM PIN 6 V30
C109 27
R109 100Ω
R143 4.7K
D130 T12G
R117 10K5 5%
R125 1K
R127 680Ω
C127 5%
V150A ½6AL5
V150B ½6AL5
R160 100Ω
B161 NE-2
V160A ½-6AN8
C161 .001
R161 470K
B160 NE-2
R162 1.5M
R165 47K1
R164 47K1
C164 470
TO HORIZ AMPLIFIER
R155 10K5 5%
R159 100Ω
V160B ½-6AN8
R157 2.2K1
R156 2K
R158 6K5 5%
SWEEP DURATION
SWEEP LENGTH
V140 12AT7
R140 100Ω
R141 27K
R142 39K
C140 .01
R144 100K
R146 100K
PRESET STABILITY
R147 33M¼
R148 33M¼
R149 33M¼
RH (R166)
515A MOD 760C
TIME-BASE GENERATOR

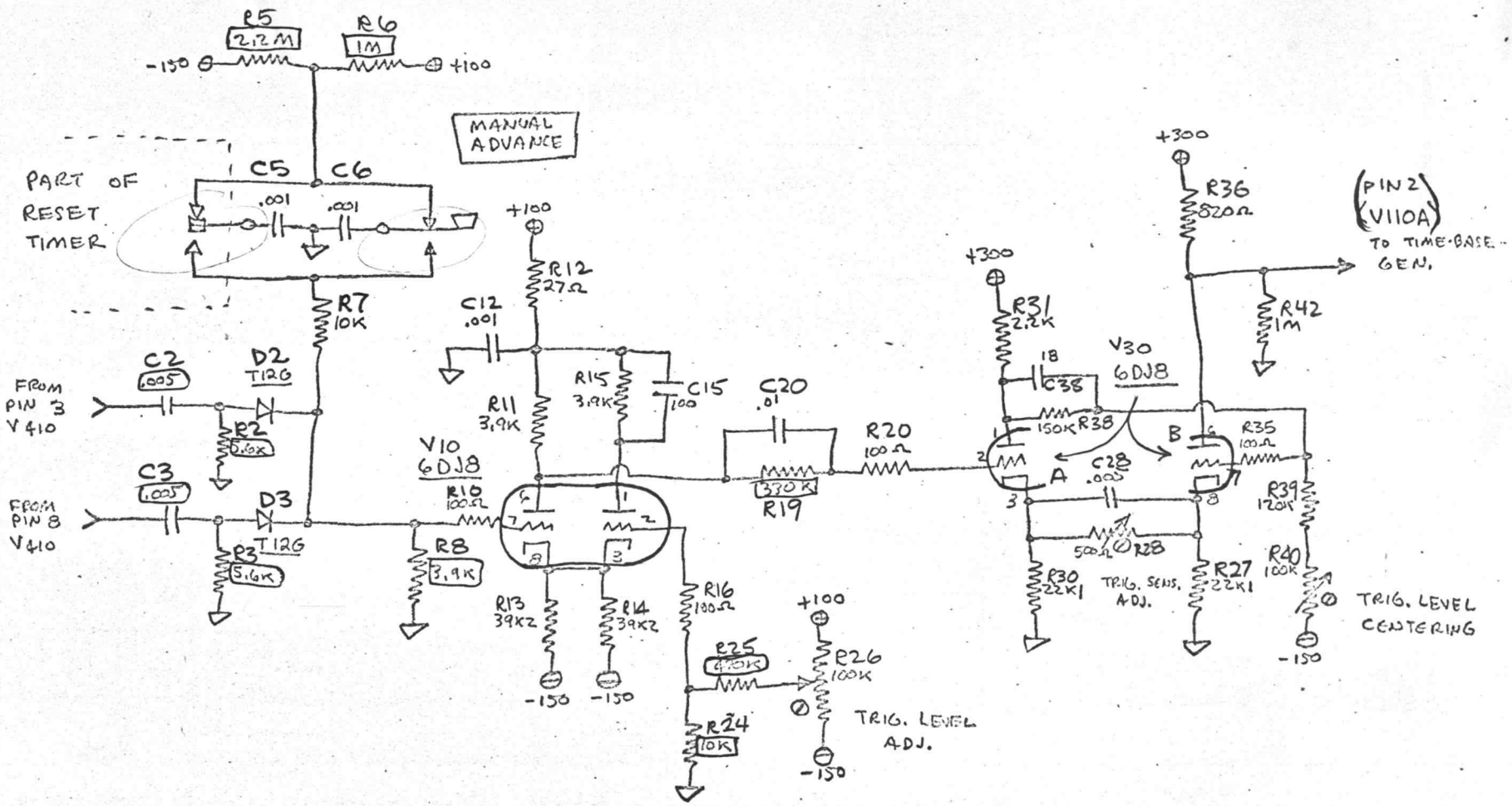

515A MOD 760C

TIME-BASE TRIGGER

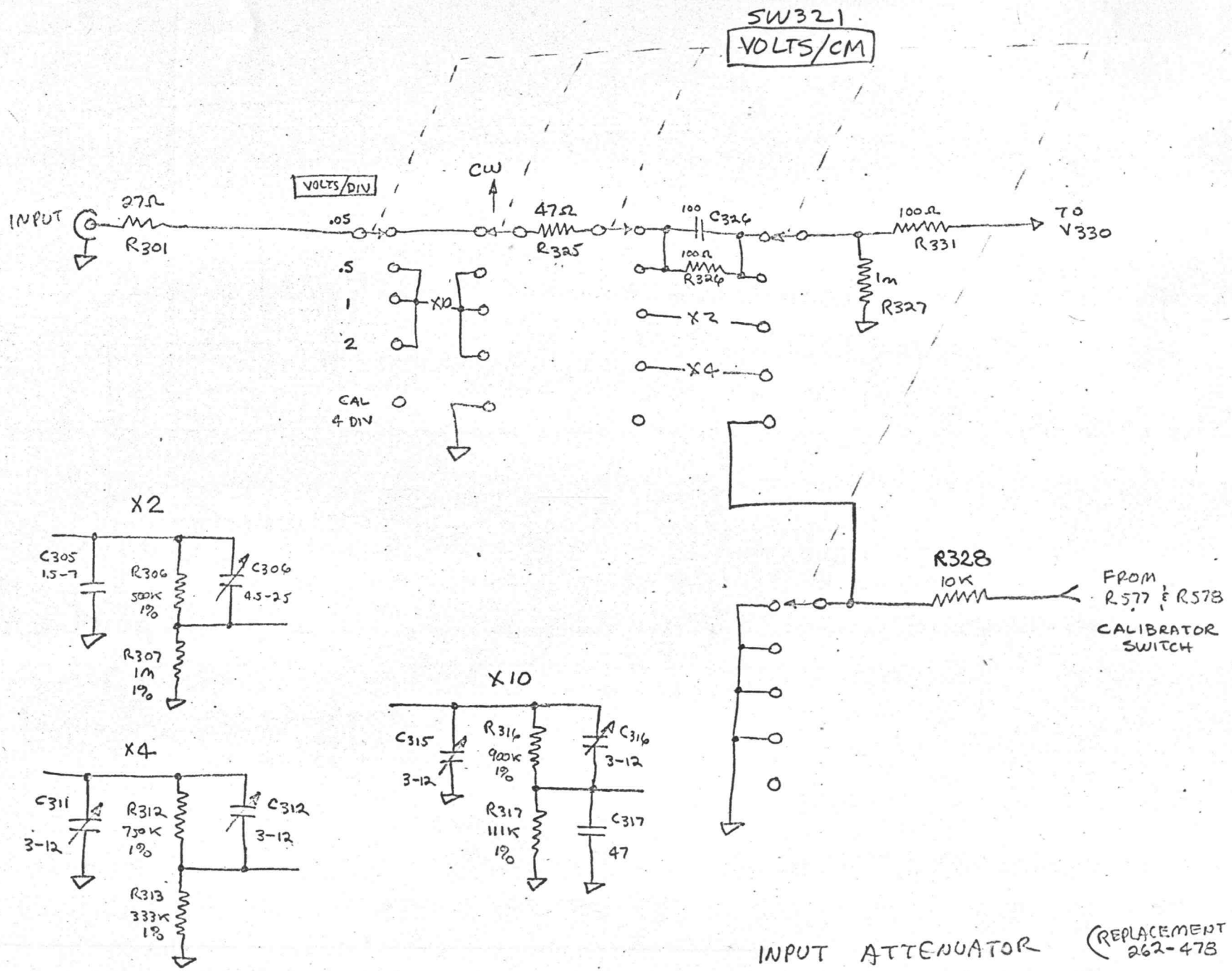

30° INDEX

INPUT ATTENUATOR (REPLACEMENT FOR 262-478)

515A MOD 760 C

790761

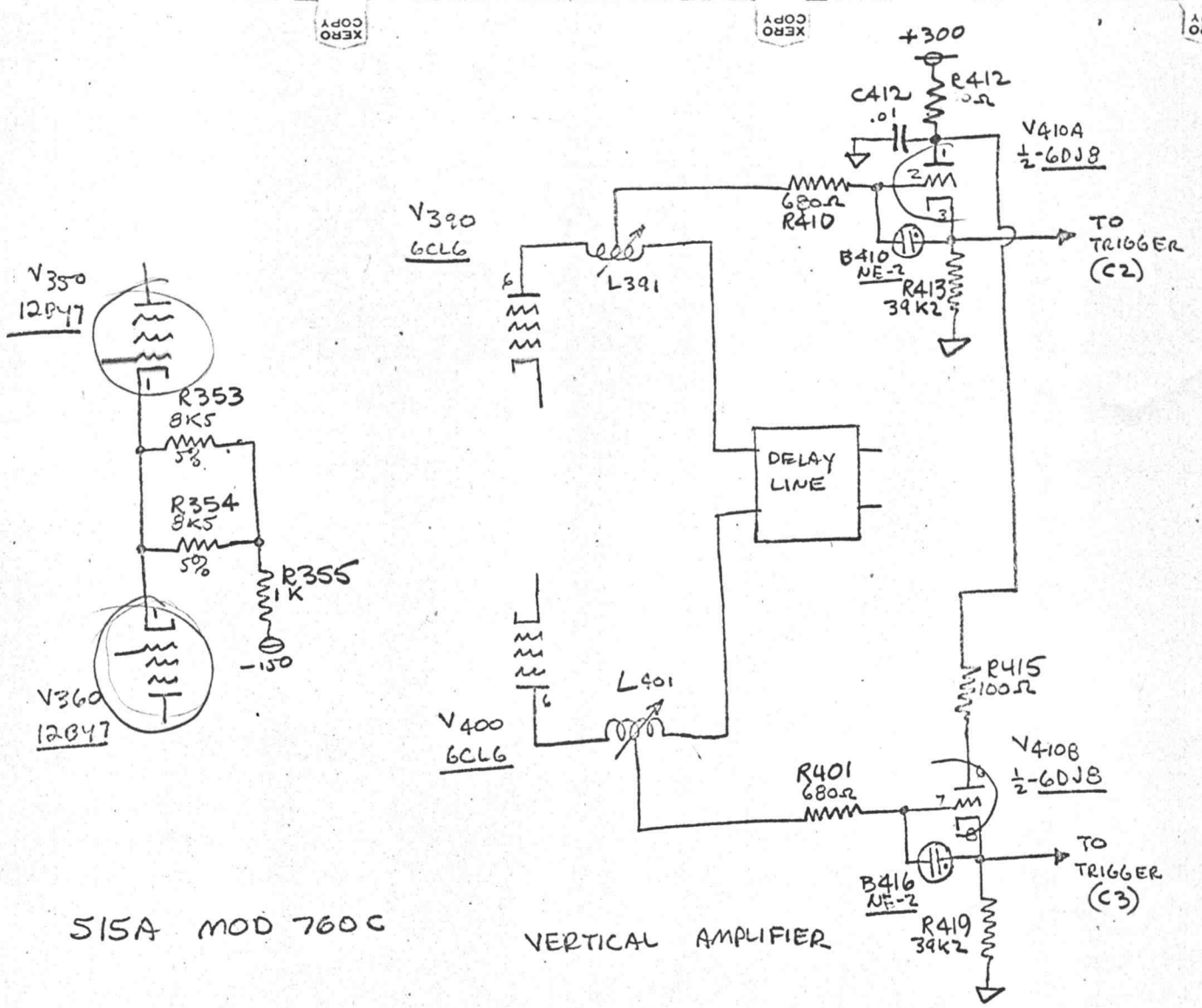

515A MOD 760C

VERTICAL AMPLIFIER

V

515A Mod 760C

790761

8/12/65
Dave Ollison

Preliminary Proc.

Make the following circuit changes before proceeding with the calibration of the instrument.

(a) Disable the 6DJ8 V180, and the delay circuit by removing the tube from its socket.

(b) Run a jumper from the 330K to the 9-1 wire on the front side of the second wafer on the time duration switch.

(c) Disconnect the 9-7 wire from pin 8, V410B but do this on sweep chassis by lifting the first .005 capacitor to the +12G diode so as to disable half of the trigger pickoff circuit. Then the sweep will always start on the rising portion of the waveform.

(d) Connect 100K in parallel with R25-470K which runs from the center arm of the trig. level adjust pot.

Cal. Proc.

(1) Vert amp.

Put the Sweep Duration switch to 10 msec linear position, Vert positioning controls so the dot on the knob is centered, and Volts/Div. switch to Cal. 4 Div. position, Turn calibrator to any position except off position. Now adjust R338 DC Balance control so the bottom of the calibrator waveform is on the center line of the graticule.

(2) Adjust R396 vert gain pot for 4 major division of calibrator display (be sure calibrator has been set up first)

③ To free run the trace to check hum and noise, put Volts/Div switch in .05V position, remove signal and adjust R146 preset stability pot for a trace. after checking reset stability pot.

④ change Volts/Div. switch to .05V position, connect a X10 probe to the output of a square wave generator (type 105). Set the 105 for 1K approx 4 major div. of display adj the probe trimmer for flat response.

⑤ Now since the probe compensation has been set up change Volts/Div switch to .5V position and adjust C315, C316 for attenuator compensation & input capacitance. change Volts/Div switch to 1V position and adjust C305, C306.

change Volts/Div switch to 2V position and adjust C311, C312

⑥ change Volts/Div switch to .05V position and connect a square wave generator (type 107) to input via 52 terms. change sweep Duration switch to 10 μsec position adj the 107 for 4 major Div. display & approx. 400K c. Then adjust high frequency compensation and delay line.

⑦ Triggering

Set up triggering by grounding pin 2 V10 with a clip lead. Then set Trig. Sens control fully counter clockwise and the trig. Level centering control fully clockwise. Turn the preset stability control counter clockwise until the trace disappears from the CRT screen.

⑧ change Volts/Div switch to 1V, set calibrator to .1V & jumper to vert input. adj triggering level centering to a point that a trace just appears on the screen. Then adj trig sens control for a stable display, adj both of the control back & forth until

515A MOD 760C

EXPONENTIAL SWEEP $t = .4 \ln \frac{10.9}{10.9 - d}$

GRATICULE DIVISION	SWEEP DURATION RANGE t μSEC			
d	500 μSEC	100 μSEC	20 μSEC	10 μSEC
0	0	0	0	0
1	19	3.8	.8	.4
2	40	8	1.6	.8
3	64	13	2.6	1.3
4	92	18	3.6	1.8
5	122	24	4.9	2.4
6	160	32	6.4	3.2
7	205	41	8.2	4.1
8	265	53	10.6	5.3
9	350	70	14	7.0
10	500	100	20	10

a stable display but not to sens. so that it will not osculate.

(9) Now remove clip lead, adj calibrator output for 1V, Sweep Duration switch to 10 m sec position. Now adjust trigger level control for a trigger display when 1 major div of signal is displayed on the screen, there will be a finer adjustment of the control later.

(10) Horiz. amp.

Now connect time mark generator type 180 to vert input, with 1 msec markers, position horiz. position control so the dot is centered, then adjust norm. mag. regis. control so the start of the trace is at the left hand edge of the graticule.

(11) Adjust sweep mag. gain pot for the basic timing, one marker per major div.

(12) Set sweep length to exactly 10 major div. long.

(13) Connect x10 probe to pin 3 V210, set test scope, Vert. .5 Volts/cm., Time/cm .2 m sec. Then change scope under calibration. Sweep Duration switch to 10 μ sec.

Now adj C210 (long time constant) for a flat base line on test scope, change test scope to 10 μ sec & adj C224 (now mounted on Horiz amp circuit) for short time constant for flat base line.

(14) Change sweep duration switch to 10 m sec position & adj horiz position control so the trace is on left edge of the graticule do not move this control while timing

Note: Refer to listed chart for timing & spec. The timing is done of 9th & 10th major div. The other major div shell fall with in ±1 minor div.

[ ] ← chart.

(15) change sweep Duration switch to 500 μsec position apply 500, 50, 10 μsec markers and adjust trigger level control for a stable display. (be sure to remove probe) adjust R___ and R___ together for the 500 μsec range

(16) change to 100 μsec position and apply 100, 10, 5 μsec markers and adjust trigger level control for a stable display adjust C___ & R___ together

(17) change to 20 μsec position and apply 10, 5, 1 μsec markers and adjust trigger level control for a stable display adjust C___ & R___

(18) change to 10 μsec position and apply 10, 5, 1 μsec marker and adjust trigger level control for a stable display adjust C___ & R___

(19) adjust C___ for exactly 10 major div. of length in 10 μsec sweep. Note: on the fast speed timing C224 may be adjusted very slightly to improve linearity for timing spec.

(20) Disconnect jumper, remove 100K resistor, solder back in .005 cap, also install tube. change to 10 msec sweep, connect Cal out to vert input & set volts/Div switch to .5V & calibrator to .2V. The display should be 2 minor div, now adj trig. level control for a stable display then back off till there is a dual triggered display both + and - triggers. change calibrator to .1 volts trace should disappear.

(21) Remove signal from vert. & press manual advance button there should be only one trace appears also check to see if the relay operates once.

(22) apply calibrator to vert, the calibrator to 1V & Volts/Div to .5V, Sweep Duration to 500 μsec position, connect X10 probe to pin 3 of V210 with test scope time/cm switch to .1 sec position, check for approx. 5 c.p.s. repetition rate. (approx. 200 m sec between sweeps)

(23) check the duration of the relay by connecting another X10 probe to film advance jack along with a VOM, put VOM in X100 in the ohm range, test scope in added position, volts/cm to .5V 180 to 1 sec marker, and to the vert of the scope under calibration. Set trigger from 180 to left trigger of the test scope. (1 sec). Then look at the duration that the relay is closed more than 100 msec and then make sure the sweep has finished be fore the relay closes in all position of the sweep duration switch.

(24) ~~Now~~ Check timer.

INSTRUCTION MANUAL

MODIFICATION INSERT

PROOF COPY
RETURN TO
MANUALS DEPT.

I NEED:

CALIBRATION (CHECK-OUT) FOR TIME-CLOCK

SWITCH PART NUMBERS

MECHANICAL PARTS LIST

IS H.V. TRANS. CHANGED? OR JUST LOOP ADDED?

yes

TYPE 515A
MOD 760C

This insert has been written to supp
Instruction Manual furnished with thi
instrument. The information given in
will supersede that given in the manual

This Insert Material Copyright © Tektronix, Inc., Beaverton, Oregon. Printed in the United States of America. All rights reserved. Contents of this insert may not be reproduced in any form without permission of the copyright owner.

TYPE 515A

MOD 760C

Tektronix, Inc.
S.W. Millikan Way • P. O. Box 500 • Beaverton, Oregon • Phone MI 4-0161 • Cables: Tektronix

ds

TYPE 515A
MOD 760C

The Oscilloscope for which this insert was prepared has been modified to provide a photographic record of line transients in the range of 25 volts to 12 kilovolts, using the 1000X Probe. The sweep may be triggered by three methods; once each hour by a built-in timer, in the normal manner when a pulse above a preset level causes a trigger, and manually by pressing the MANUAL ADVANCE button.

SPECIFICATIONS

The specifications listed below are different for this modified instrument from those listed in the manual.

Vertical Deflection System

Volts/Div---Four calibrated positions; .05, .5, 1, and 2 V/Div, plus a 4 Division Calibrated signal connected internally from the Calibrator.
Maximum Peak Input Voltage to 1000X Probe---12 kv
Input Impedance---100 meg, 2.5 pf with 1000X Probe.

Horizontal Deflection System

Sweep Duration---Five calibrated sweeps; 10, 20, 100 and 500 μsec Exponential, and 10 msec Linear.
Maximum Sweep Repetition Rate---Aproximately 5 cps.
Sweep Voltage rises Exponentially at approximately:

$$d=k(1-e^{-2.5t})$$

Where:
d=horizontal displacement in div.
k=approximately 10.9
t =fraction of total time

Magnifier---Deleted
Trigger Requirements---2 minor divisions of deflection.

Cathode Ray Tube

Type T55P11
Accelerating Potential---Approximately 6325 volts.

Graticule

Special High-Voltage. One graticule division equals .85 cm.

Output Signals Available

Calibrator Only

OPERATION

Front panel controls and connectors not needed for the operation of this instrument have been removed. These Include: INPUT SELECTOR, INPUT 1, DC BAL(moved to internal), VARIABLE VOLTS/CM, TRIGGER INPUT, TRIGGER SELECTOR, TRIGGER LEVEL (moved to internal), HORIZONTAL DISPLAY, EXT. HORIZ. INPUT, VARIABLE TIME/CM, + GATE OUT, and SAWTOOTH OUT. The TIME/CM switch has been replaced by the SWEEP DURATION switch. The MANUAL ADVANCE button has been added.

Triggering

When connected to photograph line transients, this instrument will be triggered by signals with amplitudes producing more than 2 minor divisions of CRT display and timed pulses from the automatic timer, and may also be triggered manually. Each time the sweep is triggered, a relay completes the film advance circuit for operating a camera.

A Time Clock, which is adjustable from 5 to 60 minutes, provides automatic triggers at preset intervals. When the timer reaches the preset time, one sweep is displayed and photographed. When a signal of suitable amplitude triggers the sweep, or when the MANUAL ADVANCE button is pressed, the Time Clock resets and starts a new time cycle. The Time Clock therefore, sets the maximum time between displays.

When the Trig. Level Adj. is adjusted as described in the calibration procedure which follows, the sweep will be triggered on any signal, either positive or negative, which produces more than 2 minor divisions of vertical deflection. All signals below this level will be locked out, and will not produce a trigger pulse. The triggering level may be adjusted however, so the sweep will trigger only on signals producing more than 2 minor divisions of vertical deflection. To do this, apply a signal giving the desired minimum deflection and adjust the Trig. Level Adj. to the minimum setting at which a sweep is produced. Do not adjust this control to trigger on signals producing less than 2 minor divisions of deflection. If it is set too sensitive, random noise will trigger the sweep.

NOTE: If it becomes neccesary to remove V610, first remove the four screws in the corners of the Time Clock. Move the clock out slightly and remove the tube. The wires need not be disconnected.

CALIBRATION

The following is a complete Calibration procedure which replaces the procedure in the manual.

Make the following circuit changes before proceeding with the calibration of the instrument:

a. Disable the 6DJ8, V180 and the relay circuit by removing the tube from its socket.

b. Connect a jumper from the 330k (R166) to the 9-1 wire (w, bn) on the front side of the second wafer on the TIME/DURATION switch.

c. Disconnect C3 (at the input of the trigger circuit). The sweep will now always start on the rising portion of the waveform.

d. Connect 100k in parallel with R25, 470k which is connected to the center arm of the Trigger Level Adjust pot.

Power Supply

All power supply voltages except the CRT voltages are available at the ceramic strip behind the transformer. The 10Ω resistors are ahead of the regulators and the bare wires carry the regulated voltages.

1. -150 volt Supply Adjustment

The -150 volt supply is the one to which all other supplies are referenced.

a. Connect an accurate voltmeter to the -150 volt bus.

b. Adjust the -150 ADJ control, located behind the delay line, to obtain a reading of -150 volts.

2. CRT Supply Adjustment

This adjustment determines the total accelerating voltage on the CRT and thus affects the deflection sensitivity.

a. Connect a voltmeter having a resistance of 5000Ω/volt or higher, from terminals 24 or 25 of the power transformer to ground.

b. Adjust the -1675 ADJ control located at the rear of the upper chassis, accessible from the right, to obtain a reading of 1675 volts.

3. Calibrator Adjustment

When the CALIBRATOR switch is turned off, the calibrator cathode follower, V570B remains conducting at the current required to develop 100 volts across the voltage divider. The CAL ADJ control, located just behind the CAL OUT connector, allows this voltage to be set accurately to 100 volts. Be careful to use an accurate meter as the accuracy of the calibrator can be better than 3 per cent if accurately set.

a. Turn the CALIBRATOR control OFF.

b. Connect the meter from ground to the pin jack labeled CAL TEST POINT, located behind the CALIBRATOR switch.

c. Adjust the CAL ADJ control for 100 volts.

Triggering

a. Set up triggering by grounding pin 2 of V10 with a clip lead. Then set the TRIGGER SENSITIVITY control fully counterclockwise and the TRIGGER LEVEL CENTERING control fully clockwise. Turn the PRESET STABILITY control counterclockwise until the trace disappears from the CRT screen.

b. Change the VOLTS/DIVISION switch to 1 volt. Set the CALIBRATOR to .1 volt and jumper to vertical INPUT. Adjust TRIGGER LEVEL CENTERING to a point that a trace just appears on the screen. Then adjust TRIGGER SENSITIVITY control for a stable display. Adjust both of the controls back and forth until a stable display is obtained. The trigger should not be so sensitive that it will oscillate.

c. Remove clip lead from pin 2 of V10, and adjust Calibrator Output for 1 volt. Set SWEEP DURATION switch to 10 msec position. Adjust TRIGGER LEVEL control for a triggered display when 1 major division of signal is displayed on the screen. There will be a finer adjustment of the control later.

CRT Geometry Adjustment

The GEOM ADJ control located in the top row of controls, varies the CRT second anode voltage to obtain the best possible linearity near the edge of the graticule.

a. Set the SWEEP DURATION switch to 10 msec position.

b. Display the CALIBRATOR waveform at a high amplitude so that the top and bottom of the waveform are beyond the deflection plate cutoff.

c. Adjust the GEOM ADJ control so the vertical lines near the edge of the graticule are straight.

Horizontal Amplifier

a. Connect Time Mark Generator (Type 180) to Vertical INPUT with 1 msec markers. Set HORIZONTAL POSITION control so the dot is centered. Adjust the MAG REGIS control so that the start of the trace is at the left-hand edge of the graticule.

b. Adjust MAG GAIN ADJ for the basic timing, one marker per division. Recheck MAG REGIS, step a.

c. Set SAWTOOTH AMPL (Sweep Length) to about 10 1/2 major divisions. The SAWTOOTH AMPL will be set exactly later.

d. Connect 10X Probe to pin 3 of V210. Set the test scope Vertical to .5 volts/cm and Time/Cm to .2 msec. Change SWEEP DURATION on scope under calibration to 10μsec. Adjust C210 (long time constant) for a flat base line on test scope. Change test scope to 10 μsec and adjust C224 (now mounted on horizontal amplifier circuit), fast time constant, for flat base line.

e. Change SWEEP DURATION to 10 msec and adjust HORIZONTAL POSITION control so that the trace is on the left edge of the graticule. Do not move this control while making timing adjustments.

Refer to the chart below for timing and specifications. The timing is done on 9th and 10th major divisions. The other major divisions will fall within ± 1 minor division.

Exponential Sweep $t = .4 \ln \frac{10.9}{10.9 - d}$

Graticule Division d	Sweep Duration Range t μsec 500μsec	100μsec	20μsec	10μsec
0	0	0	0	0
1	19	3.8	.8	.4
2	40	8	1.6	.8
3	64	13	2.6	1.3
4	92	18	3.6	1.8
5	122	24	4.9	2.4
6	160	32	6.4	3.2
7	205	41	8.2	4.1
8	265	53	10.6	5.3
9	350	70	14.0	7.0
10	500	100	20.0	10.0

f. Change SWEEP DURATION switch to 500μsec position. Apply 500,50, and 10μsec markers and adjust TRIGGER LEVEL control for a stable display. Adjust R180B and R160A together for the 500 μsec range. (Be sure to remove the probe).

g. Change to 100 μsec position and apply 100, 10 and 5 μsec markers and adjust TRIGGER LEVEL control for a stable display. Adjust C160D and R160C together.

h. Change to 20 μsec and apply 10, 5 and 1 μsec markers. Adjust TRIGGER LEVEL control. Adjust C160E and R160E.

i. Change to 10 μsec with same markers and adjust C160F and R160G. Note: On the fast speed, C224 may be adjusted slightly to improve linearity.

j. Change SWEEP DURATION to 100 μsec and adjust Sweep Length for exactly 100μsec. Check 10msec, 500μsec, and 20μsec positions for 10 divisions of length.

k. Adjust C170 for a sweep length of 10 μsec and 10 major divisions of length in 10μsec sweep.

TYPE 515A, MOD 760C

Vertical Amplifier

a. Set the Scope as follows:

SWEEP DURATION	10 msec Linear
VERTICAL POSITIONING	knob centered
VOLTS/DIVISION	Cal 4 Div
CALIBRATOR	On (any amplitude)

b. Adjust the DC Balance control so the bottom of the Calibrator waveform is on the center line of the graticule. (If neccesary, adjust PRESET STABILITY and TRIGGER LEVEL to obtain a trace.

c. Adjust VERTICAL GAIN (R396) for 4 major divisions of Calibrator display.

d. Turn VOLTS/DIV to .05 volts, remove signal and adjust PRESET STABILITY (R146) for a trace. Check hum and noise.

e. Connect a 10X probe to the output of a square wave generator (Type 105). Set the square wave generator for 1kc, and approximately 4 major divisions of display. Adjust the probe trimmer for a flat response.

f. Change VOLTS/DIV to .5 volts and adjust C315 and C316 for attenuator compensation and input capacitance. Change VOLTS/DIV to 1 volt and adjust C305 and C306. Change VOLTS/DIV to 2 volts and adjust C311 and C312.

g. Turn VOLTS/DIV to .05 volts and connect a square wave generator (Type 107) to input through 52Ω termination. Set SWEEP DURATION switch to 10μsec and adjust the Type 107 for 4 major divisions of display and approximately 400kc. Adjust high frequency compensation and delay line.

Final Adjustments

a. Disconnect jumper, remove 100k resistor, replace C3 and V180 (see preliminary steps). Change SWEEP DURATION to 10 msec. Connect Calibrator to Vertical INPUT and set VOLTS/DIV to .5 volts, Calibrator to .2 volts. The display should be 2 minor divisions. Adjust TRIGGER LEVEL for a stable display, and back off until there is a dual triggered display for both + and - triggers. Change Calibrator to .1 volts. The trace should disappear.

b. Remove signal from Vertical and press MANUAL ADVANCE button. Only one trace should appear. Also check to see if the relay operates.

c. Apply Calibrator to Vertical. Change the Calibrator to 1 volt and the VOLTS/DIVISION to .5 volts. Change SWEEP DURATION to 500 μsec. Connect 10X probe to pin 3 of V210 with test scope Time/Cm switch set to .1 sec. Check for approximately 5 c.p.s. repetition rate. (Approximately 200 msec between sweeps). If sweep cannot be obtained, replace V140. (Use low grid current tube.)

d. Check the duration of the relay by connecting another 10X probe to the Film Advance jack with a VOM. Put the VOM in X100. Put test scope in ADDED position, VOLTS/CM in .5 volts. Set the Type 180 to 1 sec markers, and apply to the Vertical Input of the scope under calibration. Connect external triggers from the 180 to the External Trigger Input of the test scope. (1 sec). Look at the time duration that the relay is closed. Should be more than 100msec. Make sure that the sweep has finished before the relay closes in all positions of the SWEEP DURATION switch.

PARTS LIST

The following parts have been added to this modified instrument. When ordering replacement parts, specify instrument type, serial number and MOD number. Include circuit number, part number, and description of the desired item.

CAPACITORS

C2	Change	283-0001-00	.005	500v		disc
C3	Change	283-0001-00	.005	500v		disc
C5	Add	283-0000-00	.001	500v		disc
C6	Add	283-0000-00	.001	500v		disc
C51	Add	285-0553-00	1μf	600v		PMC
C140	Add	285-0510-00	.01	400v		
C160A	Change	285-0664-00	.01			tek
C160B	Change	285-0665-00	.001			tek
C160C	Change	283-0544-00	150pf		10%	mica
C160D	Change	281-0012-00	7-45			var
C160E	Change	281-0012-00	7-45			var
C160F	Change	281-0010-00	4.5-25			var
C170	Add	281-0044-00	80-480			var
C182	Add	285-0501-00	.001	600v		
C184	Change	285-0515-00	.022	400v		
C185	Add	290-0145-00	10μf	50v		EMT
C224	Change	281-0007-00	3-12			var
C721	Change	283-0071-00	.0068	5kv		
C723	Add	283-0071-00	.0068	5kv		

DIODES

D2	Add	152-0008-00	T12G
D3	Add	152-0008-00	T12G
D180	Add	152-0061-00	6061
D185	Add	152-0061-00	6061

RELAYS

K180	Add	Special	4-pole double throw

RESISTORS

R2	Change	302-0562-00	5.6k	1/2w	10%	comp
R3	Change	302-0562-00	5.6k	1/2w	10%	comp
R5	Change	302-0225-00	2.2m	1/2w	10%	comp
R6	Change	302-0105-00	1m	1/2w	10%	comp
R7	Add	302-0103-00	10k	1/2w	10%	comp
R8	Change	302-0392-00	3.9k	1/2w	10%	comp

TYPE 515A, MOD 760C

R19	Change	302-0334-00	330k	1/2w	10%	comp
R24	Change	302-0103-00	10k	1/2w	10%	comp
R25	Change	302-0474-00	470k	1/2w	10%	comp
R26	Change	311-0026-00	100k	Trigger Level		pot
R50	Add	306-0221-00	220Ω	2w	10%	comp
R51	Add	304-0101-00	100Ω	1w	10%	comp
R121	Change	304-0473-00	47k	1w	10%	comp
R147	Add	316-0336-00	33m	1/4w	10%	comp
R148	Add	316-0336-00	33m	1/4w	10%	comp
R149	Add	316-0336-00	33m	1/4w	10%	comp
R160A	Change	311-0157-00	100k			pot
R160B	Change	323-0410-00	182k	1/2w	1%	film
R160C	Change	311-0329-00	50k			pot
R160D	Change	323-0414-00	200k	1/2w	1%	film
R160E	Change	311-0329-00	50k			pot
R160F	Change	323-0414-00	200k	1/2w	1%	film
R160G	Change	311-0329-00	50k			pot
R160H	Change	323-0414-00	200k	1/2w	1%	film
R166	Add	302-0334-00	330k	1/2w	10%	comp
R170A	Add	302-0125-00	1.2m	1/2w	10%	comp
R170B	Add	302-0224-00	220k	1/2w	10%	comp
R170C	Add	302-0104-00	100k	1/2w	10%	comp
R180A	Change	323-0481-00	1m	1/2w	1%	film
R180B	Change	311-0329-00	50k			pot
R180C	Add	323-0406-00	165k	1/2w	1%	film
R180D	Add	323-0414-00	200k	1/2w	1%	film
R182	Change	302-0153-00	15k	1/2w	10%	comp
R183	Change	301-0302-00	3k	1/2w	5%	comp
R184	Change	302-0103-00	10k	1/2w	10%	comp
R185	Change	302-0106-00	10m	1/2w	10%	comp
R185	Change	302-0106-00	10m	1/2w	10%	comp
R186	Add	304-0393-00	39k	1w	10%	comp
R187	Add	302-0104-00	100k	1/2w	10%	comp
R188	Add	302-0223-00	22k	1/2w	10%	comp
R214	Change	311-0018-00	20k			pot
R224	Change	323-0396-00	130k	1/2w	1%	film
R328	Add	302-0103-00	10k	1/2w	10%	comp

SWITCHES

SW10	Add	MANUAL ADVANCE
SW160	Change	SWEEP DURATION
SW321	Change	VOLTS/DIVISION

VACUUM TUBES

V723	Add	154-0051-00	5642

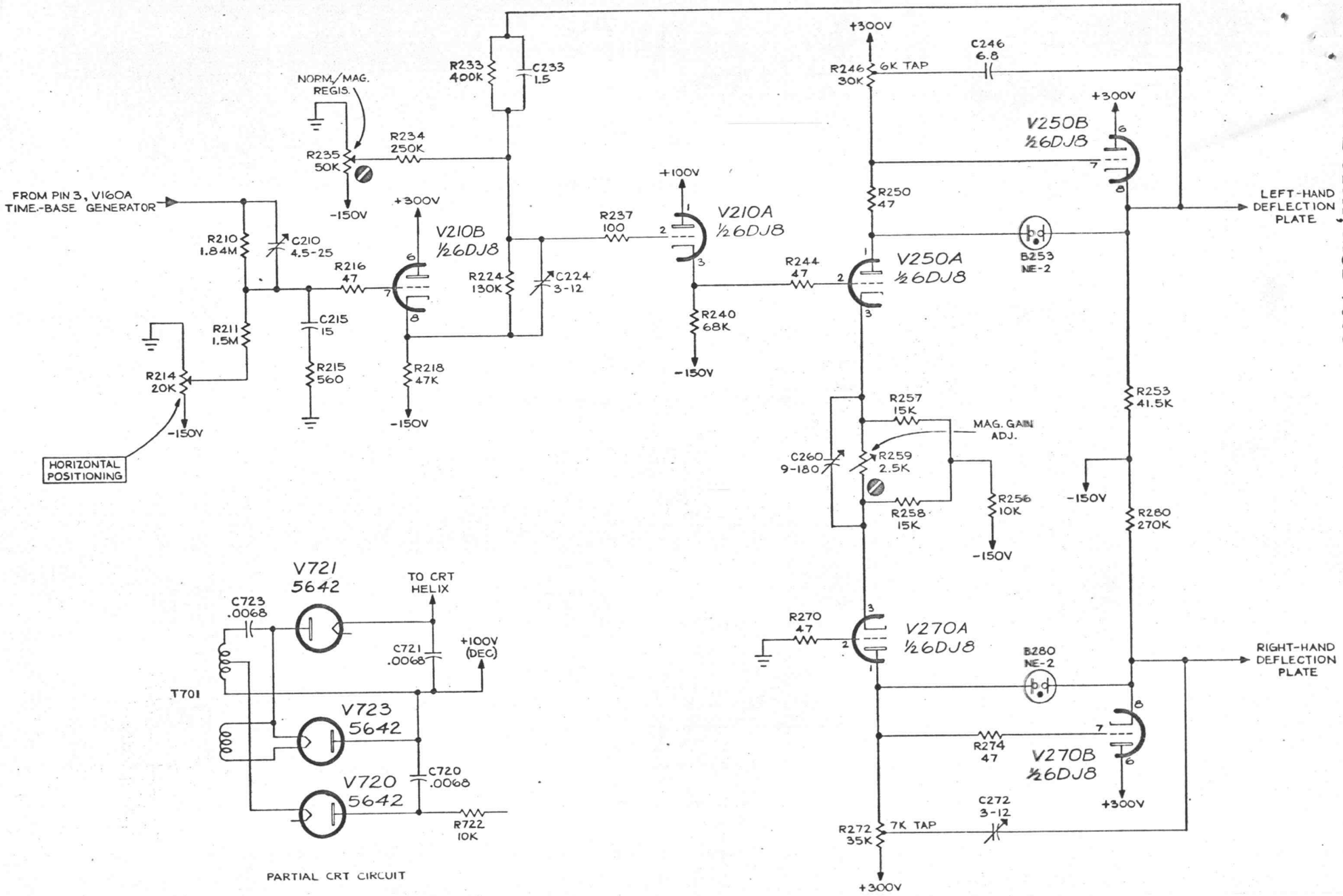

HORIZONTAL AMPLIFIER

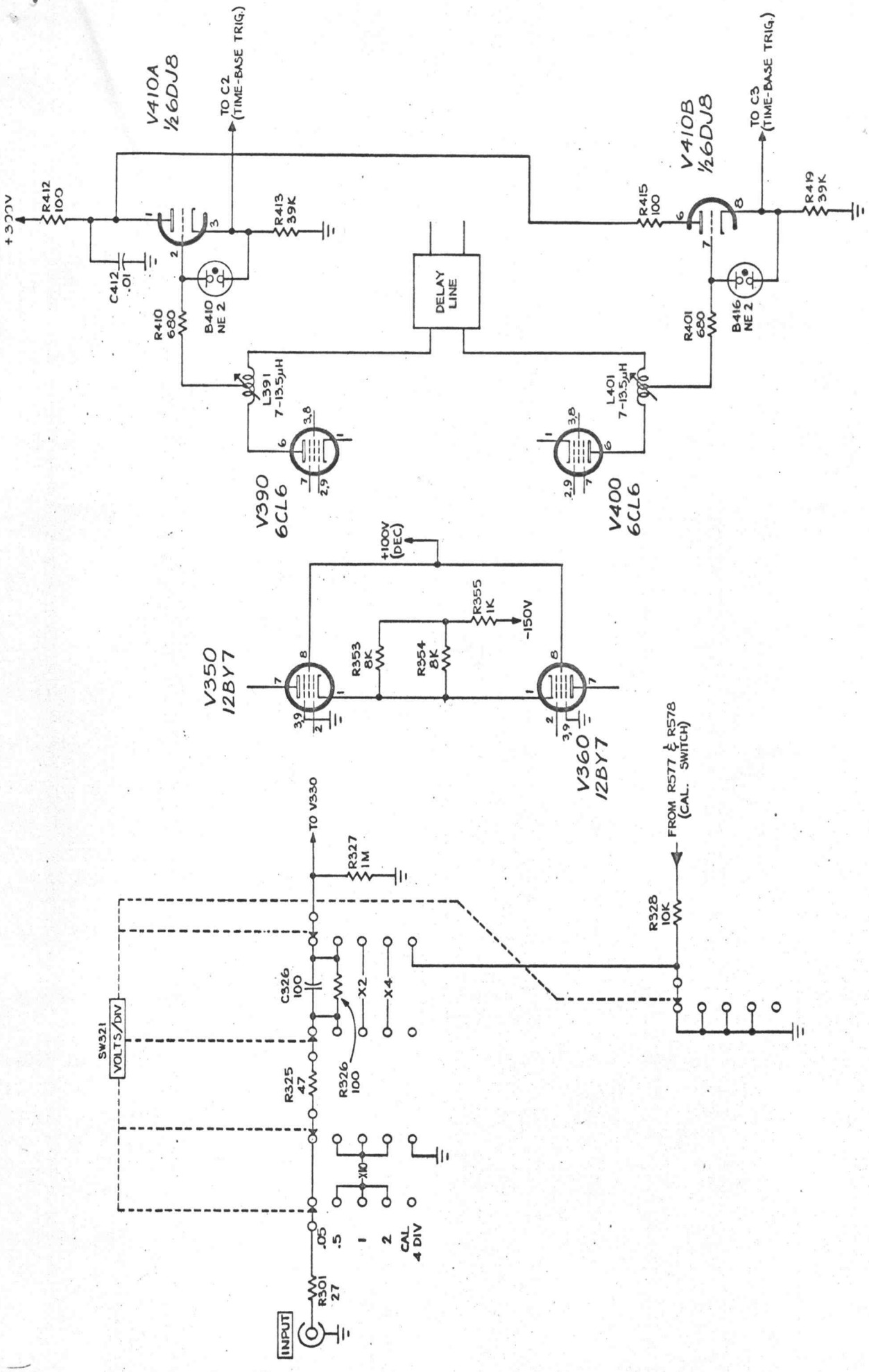

PARTIAL VERTICAL AMPLIFIER

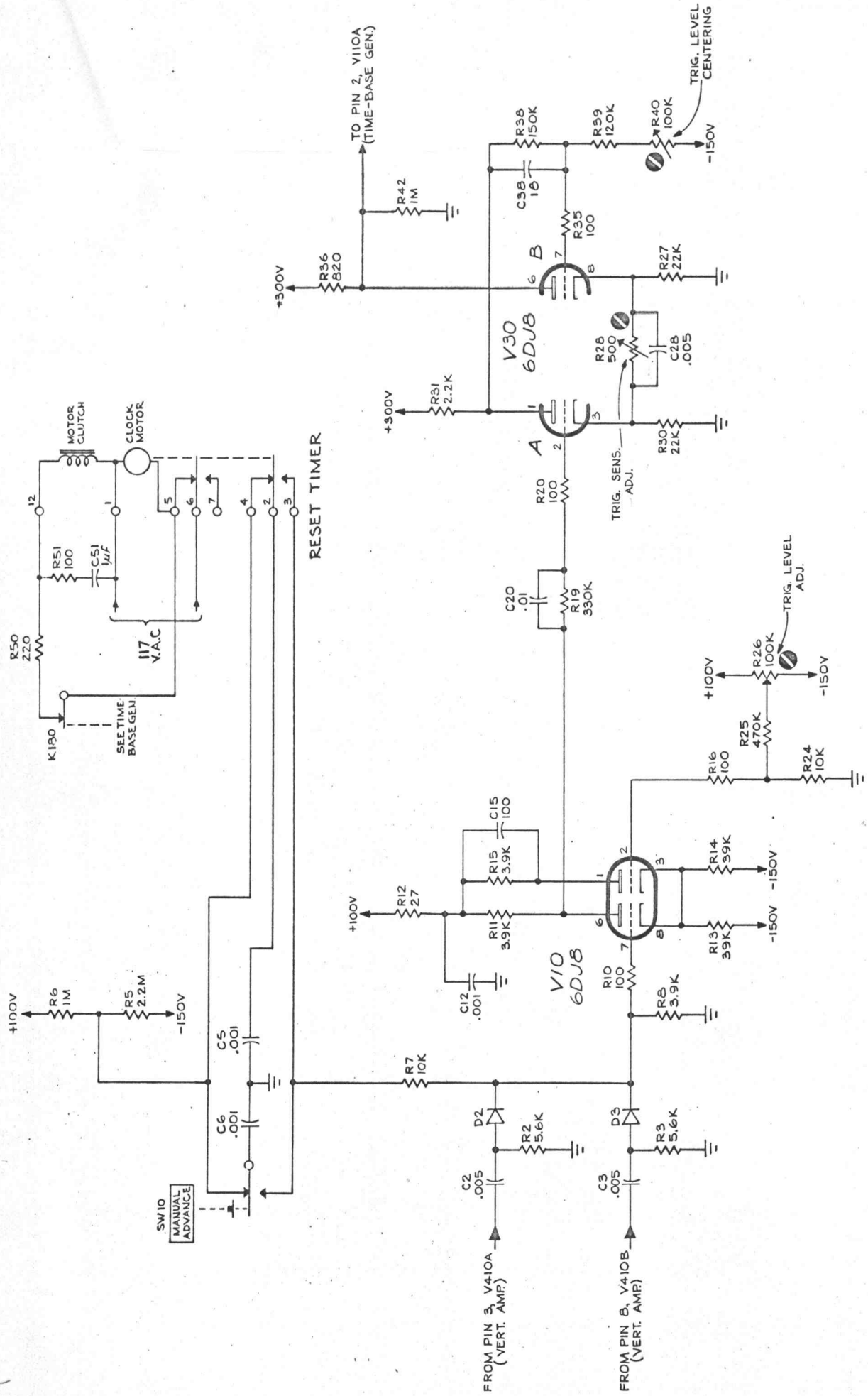

TIME-BASE TRIGGER

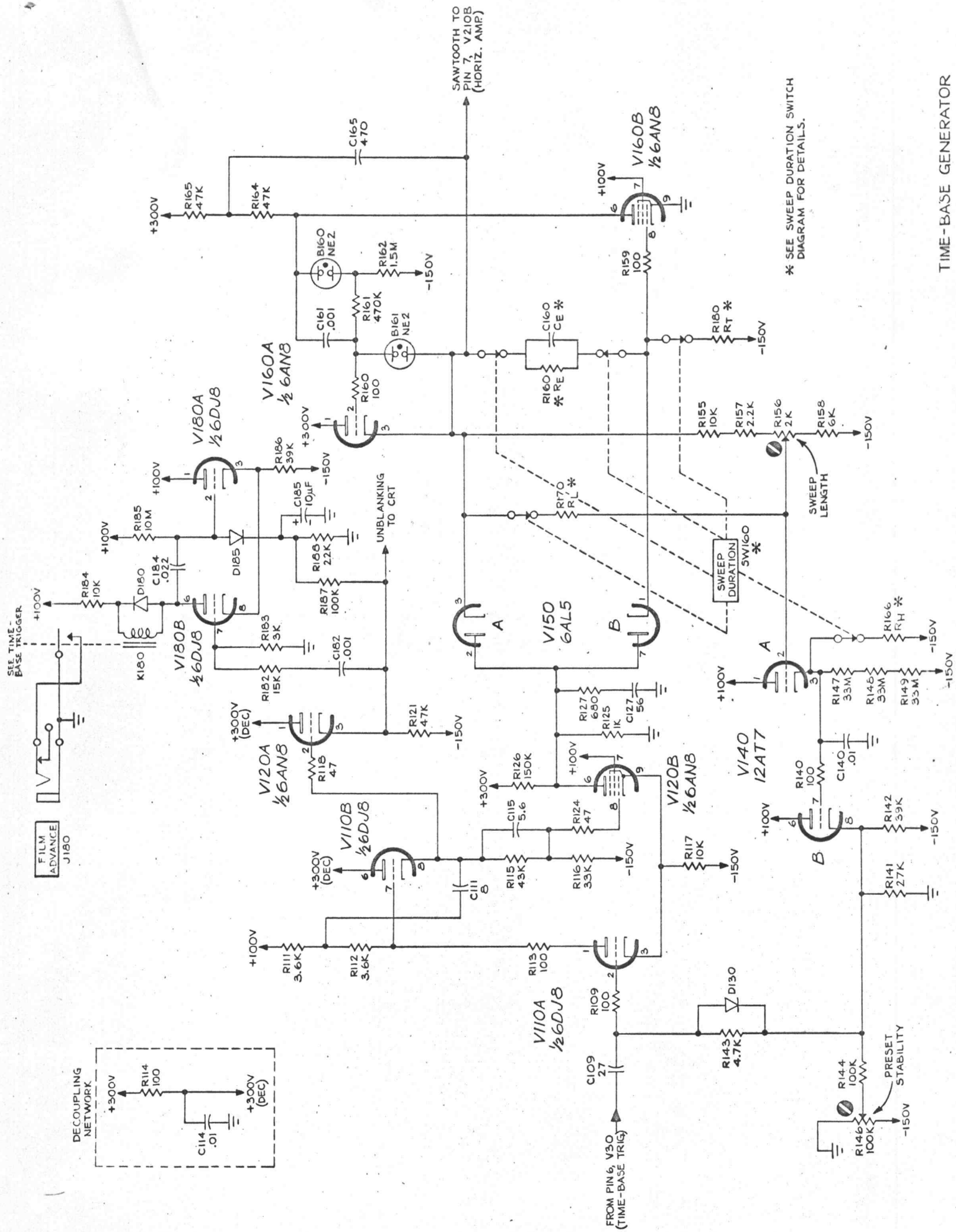
TIME-BASE GENERATOR
SAWTOOTH TO PIN 7, V210B (HORIZ. AMP.)
* SEE SWEEP DURATION SWITCH DIAGRAM FOR DETAILS.
V160B ½6AN8
V160A ½6AN8
V180A ½6DJ8
V180B ½6DJ8
V150 6AL5
V120A ½6AN8
V120B ½6AN8
V110B ½6DJ8
V110A ½6DJ8
V140 12AT7
SEE TIME-BASE TRIGGER
FILM ADVANCE J180
K180
D180
D185
D130
B160 NE2
B161 NE2
UNBLANKING TO CRT
SWEEP DURATION SW160 *
SWEEP LENGTH
PRESET STABILITY
FROM PIN 6, V30 (TIME-BASE TRIG.)
DECOUPLING NETWORK
+300V
+100V
-150V
+300V (DEC)
R165 47K
R164 47K
C165 470
R162 1.5M
R161 470K
C161 .001
R160 100
C160 CE *
R160 * RE
R159 100
R180 RT *
R155 10K
R157 2.2K
R156 2K
R158 6K
R170 RL *
R166 RH *
R147 33M
R146 33M
R149 33M
C140 .01
R140 100
R142 39K
R141 27K
R144 100K
R146 100K
R143 4.7K
R109 100
C109 27
R186 39K
R185 10M
C185 10µF
R184 10K
C184 .022
R188 22K
R187 100K
R183 3K
C182 .001
R182 15K
R121 47K
R118 47
R127 680
R125 1K
C127 56
R126 150K
C115 5.6
R124 47
R115 43K
R116 33K
C111 8
R117 10K
R111 3.6K
R112 3.6K
R113 100
R114 100
C114 .01

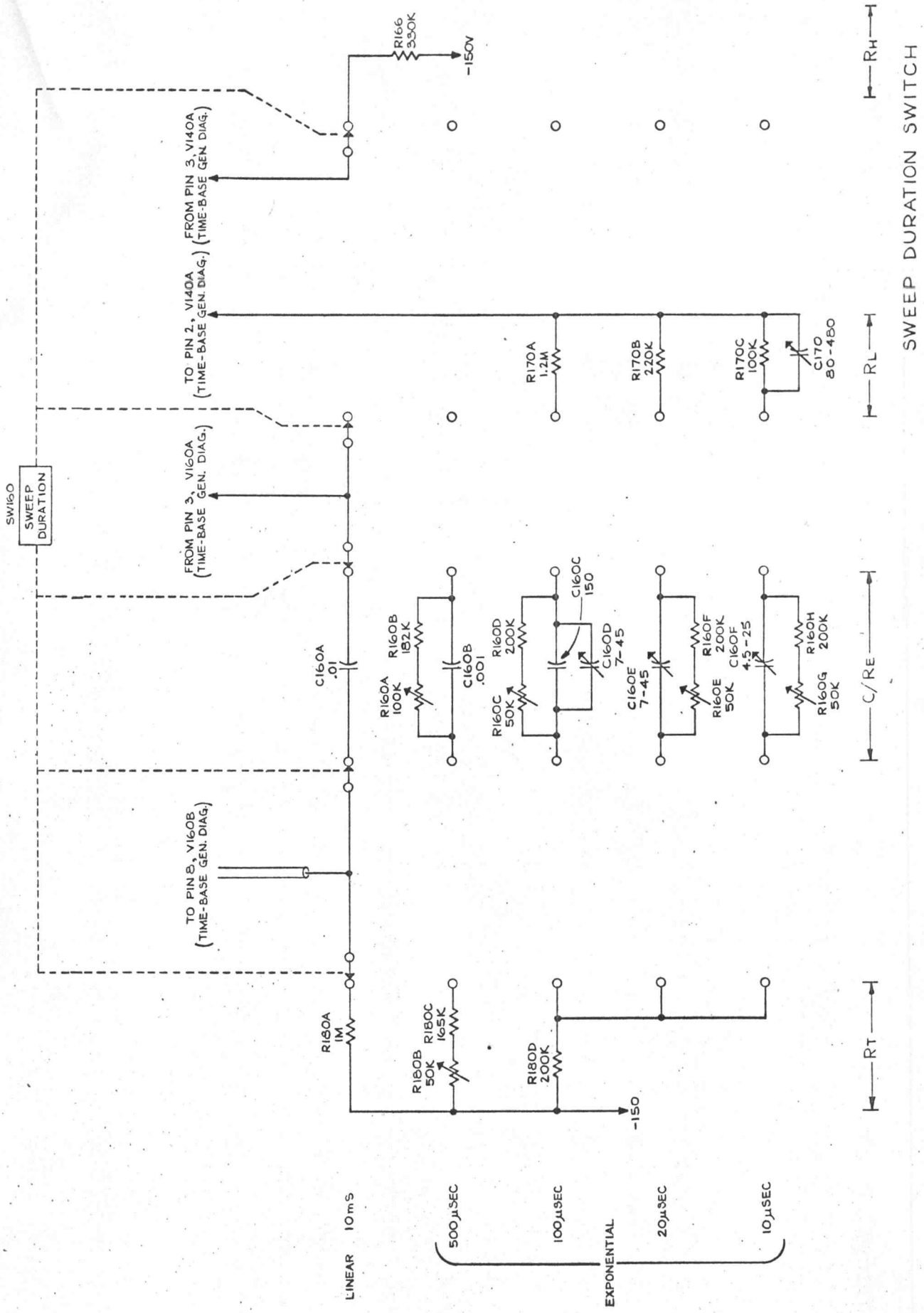
SW160
SWEEP DURATION
TO PIN 8, V160B (TIME-BASE GEN. DIAG.)
FROM PIN 3, V160A (TIME-BASE GEN. DIAG.)
TO PIN 2, V140A (TIME-BASE GEN. DIAG.)
FROM PIN 3, V140A (TIME-BASE GEN. DIAG.)
R166 330K
-150V
R180A 1M
R180B 50K
R180C 165K
R180D 200K
-150
C160A .01
R160A 100K
R160B 182K
C160B .001
R160C 50K
R160D 200K
C160C 150
C160D 7-45
C160E 7-45
R160E 50K
R160F 200K
C160F 4.5-25
R160G 50K
R160H 200K
R170A 1.2M
R170B 220K
R170C 100K
C170 80-480
RT
C/RE
RL
RH
LINEAR 10mS
500µSEC
100µSEC
20µSEC
10µSEC
EXPONENTIAL
SWEEP DURATION SWITCH

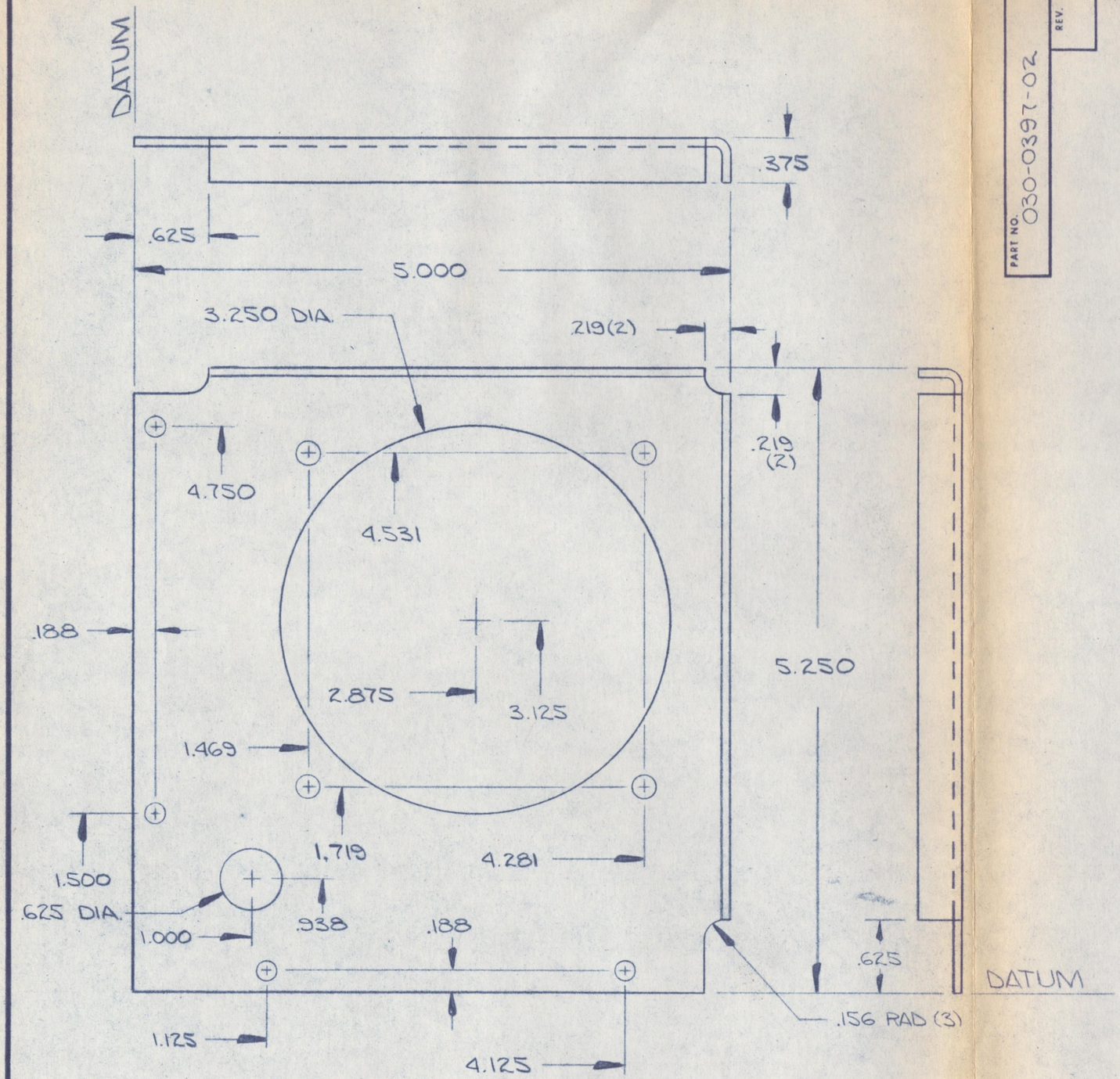

REV.	BY	REFER.	DESCRIPTION OF CHANGE	CKD BY	DATE

PART NO. 030-0397-02 REV.

PART NO. 030-0397-02 REV.

(2) UNMARKED HOLES ARE .156 DIA
(1) BEND RAD .063
NOTE:

TEKTRONIX, INC. BEAVERTON, OREGON, U.S.A.	TITLE BRACKET, TIMER			
	MATERIAL TEK# 251-180 .063 AL. SH, ASTM B 209 ALY 5052 H39			
	FINISH ETCH & LACQUER			
TOLERANCE UNLESS OTHERWISE SPECIFIED DEC ±.016 ANG ± 2° HOLES +.010 −.002 MM ±	DR. BY DUNKEN	9-25-65	ENGR. FRIED	
	CH. BY		PROD	
	SCALE FULL		FIRST USED 515A MOD 760C	
	SIZE B	PART NO. 030-0397-02		REV.

DO NOT SCALE DRAWING

PART NO.	REV.
030-0465-01	

REV.	BY	REFER.	DESCRIPTION OF CHANGE	CKD BY	DATE

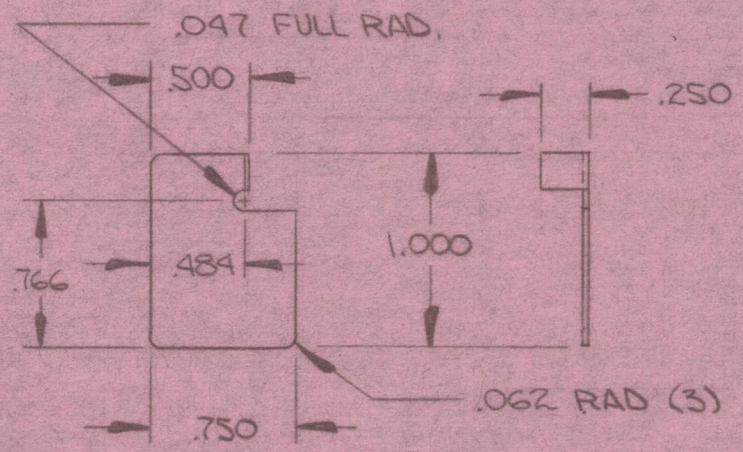

(1) BEND RAD .031 MAX.
NOTE:

TEKTRONIX, INC. BEAVERTON, OREGON, U.S.A.	TITLE SHIELD			
	MATERIAL TEK # 251-315 .016 BR. SH.			
	FINISH ALBALOY PLATE			
TOLERANCE UNLESS OTHERWISE SPECIFIED DEC ±.016 ANG ± 2° HOLES +.010 −.002 MM ±	DR. BY DUNKEN	9-27-65	ENGR. FRIED	
	CH. BY		PROD	
	SCALE FULL		FIRST USED 515A MOD 760C	
	SIZE A	PART NO. 030-0465-01		REV.

DO NOT SCALE DRAWING

			PART NO. 030-0462-01		REV.
REV.	BY	REFER.	DESCRIPTION OF CHANGE	CKD BY	DATE

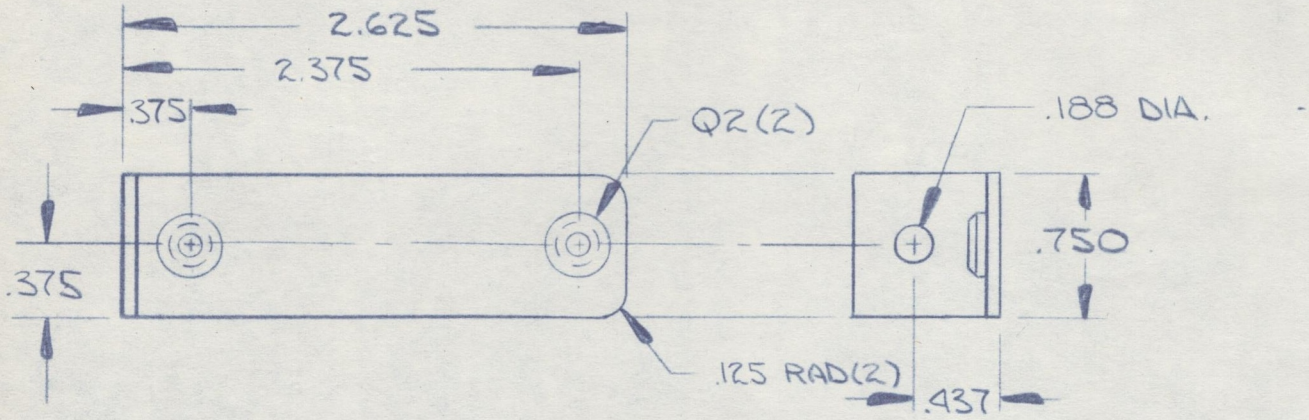

(2) BEND RAD .063
(1) Q2 = 210-0435-00 6-32 CAPTIVE NUT IN .213 $^{+.006}_{-.001}$ DIA HOLE

NOTE:

TEKTRONIX, INC. BEAVERTON, OREGON, U.S.A.	TITLE BRACKET, RESISTOR			
	MATERIAL TEK # 251-078 .080 AL. SH. ASTM B209 ALY 5052 H34			
	FINISH ETCH & LACQUER			
TOLERANCE UNLESS OTHERWISE SPECIFIED DEC ±.016 ANG ± 2° HOLES $^{+.010}_{-.002}$ MM ±	DR. BY DUNKEN	9-21-65	ENGR. FRIED	
	CH. BY		PROD	
	SCALE FULL		FIRST USED 515A MOD 760C	
	SIZE A	PART NO. 030-0462-01		REV.

DO NOT SCALE DRAWING

PART NO.	REV.
030-0460-01	

REV.	BY	REFER.	DESCRIPTION OF CHANGE	CKD BY	DATE

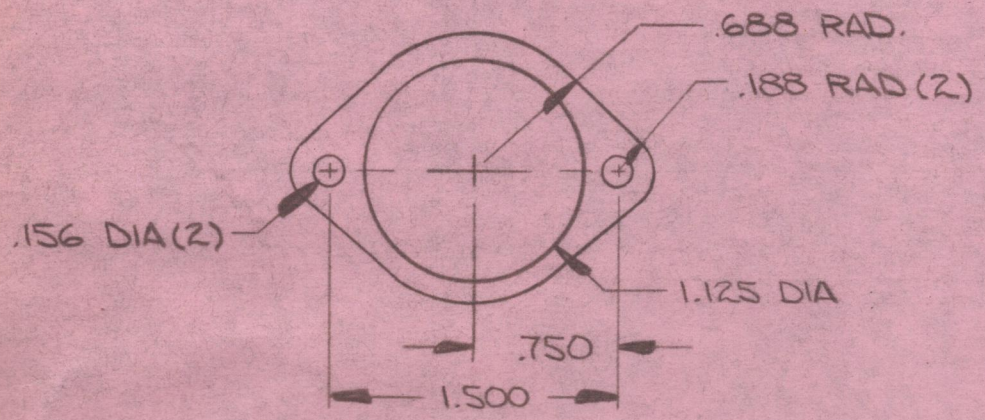

TEKTRONIX, INC.

BEAVERTON, OREGON, U.S.A.

TOLERANCE UNLESS OTHERWISE SPECIFIED

DEC ±.016
ANG ± 2°
HOLES +.010 −.002
MM ±

TITLE	FLANGE, SOCKET		
MATERIAL	TEK# 251-070 .090 AL. SH. ASTM B 209 ALY 5005 H34		
FINISH	ETCH & LACQUER		
DR. BY DUNKEN	9-21-65	ENGR. FRIED	
CH. BY		PROD	
SCALE FULL		FIRST USED 515A MOD 760C	
SIZE A	PART NO. 030-0460-01		REV.

DO NOT SCALE DRAWING

PART NO.	REV.
030-0461-01	

REV.	BY	REFER.	DESCRIPTION OF CHANGE	CKD BY	DATE

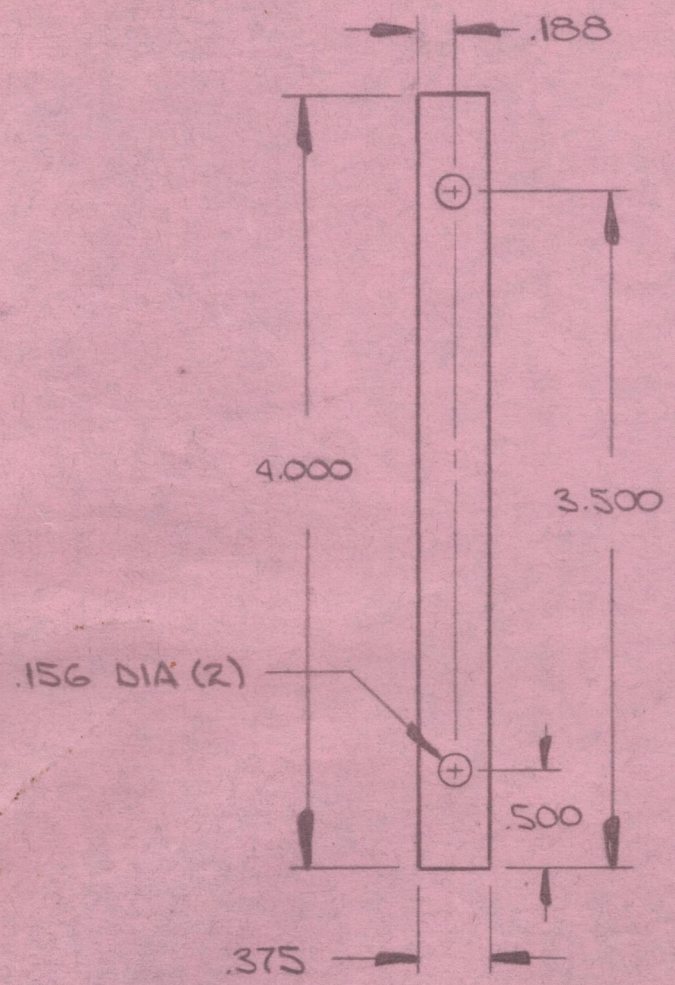

TEKTRONIX, INC. BEAVERTON, OREGON, U.S.A.	TITLE SPACER, BRACKET			
	MATERIAL TEK# 251-080 .063 AL. SH. ASTM B 209 ALY 5052 H34			
	FINISH ETCH & LACQUER			
TOLERANCE UNLESS OTHERWISE SPECIFIED DEC ±.016 ANG ± 2° HOLES +.010 −.002 MM ±	DR. BY DUNKEN	9-21-65	ENGR. FRIED	
	CH. BY		PROD	
	SCALE FULL		FIRST USED 515A MOD 760C	
	SIZE A	PART NO. 030-0461-01		REV.

DO NOT SCALE DRAWING