BEFORE READING

PLEASE CHECK FOR CHANGE INFORMATION AT THE REAR OF THIS MANUAL.

THIS MANUAL REPRINTED MAY 1978

TEKTRONIX®

RAMP GENERATOR RG 501

INSTRUCTION MANUAL

Tektronix, Inc.
P.O. Box 500
Beaverton, Oregon 97077

Serial Number _____

070-1352-01

First Printing JUL 1972

WARRANTY

All TEKTRONIX instruments are warranted against defective materials and workmanship for one year. Any questions with respect to the warranty should be taken up with your TEKTRONIX Field Engineer or representative.

All requests for repairs and replacement parts should be directed to the TEKTRONIX Field Office or representative in your area. This will assure you the fastest possible service. Please include the instrument Type Number or Part Number and Serial Number with all requests for parts or service.

Specifications and price change privileges reserved.

Copyright © 1972, new material 1976, by Tektronix, Inc., Beaverton, Oregon. Printed in the United States of America. All rights reserved. Contents of this publication may not be reproduced in any form without permission of Tektronix, Inc.

U.S.A. and foreign Tektronix products covered by U.S. and foreign patents and/or patents pending.

TEKTRONIX is a registered trademark of Tektronix, Inc.

TABLE OF CONTENTS

		Page
SECTION 1	OPERATING INSTRUCTIONS	1-1
SECTION 2	SPECIFICATION AND PERFORMANCE CHECK	2-1
SECTION 3	ADJUSTMENT	3-1
SECTION 4	MAINTENANCE	4-1
SECTION 5	CIRCUIT DESCRIPTION	5-1
SECTION 6	OPTIONS	6-1
SECTION 7	ELECTRICAL PARTS LIST	7-1
SECTION 8	DIAGRAM AND CIRCUIT BOARD ILLUSTRATION	8-1
SECTION 9	MECHANICAL PARTS LIST AND EXPLODED VIEW	9-1
CHANGE INFORMATION		

Fig. 1-1. RG 501 Ramp Generator Plug-In Module.

OPERATING INSTRUCTIONS

INSTRUMENT DESCRIPTION

The RG 501 Ramp Generator produces an adjustable 10 V ramp, either positive-going or negative-going, with selectable and variable durations from 10 s to 10 μs. A TTL-compatible gate signal coincident with the ramp duration is provided at the front panel.

The RG 501 has a full set of oscilloscope-type triggering controls providing normal or automatic triggering, slope and level selection, and triggers from three sources: line, internal, or external via a front panel BNC connector.

The RG 501 operates in a TEKTRONIX TM 500 Series Power Module only. It is completely compatible with other members of the system in terms of signal interconnections.

The RG 501 is designed to operate in ambient temperatures between 0° C and +50° C. It can be stored in temperatures ranging from −40° C to +75° C. After storage in these temperatures, allow the RG 501 chassis to return to room ambient temperature before applying power.

PREPARATION FOR USE

Installation and Removal

CAUTION

Turn the Power Module off before inserting the plug-in; otherwise, damage may occur to the plug-in circuitry.

Check to see that the plastic barriers on the interconnecting jack of the selected Power Module compartment match the cut-outs in the RG 501 circuit board edge connector.

Align the RG 501 chassis with the upper and lower guides of the selected compartment. Push the module in and press firmly to seat the circuit board in the interconnecting jack.

To remove the RG 501, pull on the release latch, located in the lower left corner, until the interconnecting jack disengages and the RG 501 will slide out.

Apply power to the RG 501 by pulling out the power switch knob of the Power Module.

Controls and Connectors

Refer to Fig. 1-2. Even though the RG 501 is fully calibrated and ready to use, the functions and actions of the controls and connectors should be reviewed before attempting to use it. Note that the POLARITY, AUTO TRIG, and SLOPE pushbuttons are push-push actions, while all the rest are self-cancelling actions. Note also that the DURATION MULTIPLIER knob skirt is illuminated from behind. This light is the only visual indication that power is being applied to the RG 501.

POLARITY Pushbutton

Selects positive-going ramps (button in) or negative-going ramps (button out).

RAMP AMPLITUDE Control

Varies peak amplitude of the ramp from about 50 mV at the ccw end to greater than 10 V at the cw end.

RAMP DURATION Pushbuttons

Select six ranges of ramp duration. Calibrated when DURATION MULTIplier is at 1.

TRIGGERING Pushbuttons

Pushbuttons select triggering mode, slope, and trigger source.

DURATION MULTIPLIER Control

Varies the RAMP DURATION from X1 (calibrated) at the cw end of rotation to about X11 at the ccw end. Control uncalibrated in between.

AUTO TRIG mode produces recurrent ramps of selected RAMP DURATIONS at rates determined by holdoff time. The AUTO TRIG mode prevails (1) in the absence of an adequate triggering signal or (2) in the presence of an adequate triggering signal but with the LEVEL control misadjusted or (3) in the presence of an adequate triggering signal running at 20 Hz or less.

LEVEL Control

Varies the amplitude point on the triggering signal at which the triggering window is placed.

NORM (button out) mode requires an adequate triggering signal and adjustment of the LEVEL control to produce a signal at the RAMP OUT connector.

EXT INPUT Connector

BNC connector providing an input for external triggering signals.

GATE OUTPUT Connectors

BNC connector providing front-panel access to the Gate signal, which is coincident with the Ramp signal.

SLOPE button in (+) or out (—) determines whether ramps will be initiated on the positive-going or negative-going portions of the triggering signal.

RAMP OUTPUT Connector

BNC connector providing front-panel access to signal output.

Pull-to-release latch.

EXT button pushed in selects the front panel BNC input EXT IN as the trigger signal source.

LINE button pushed in selects line-frequency voltage as the trigger signal source.

INT button pushed in selects internal trigger source input via rear interface connections.

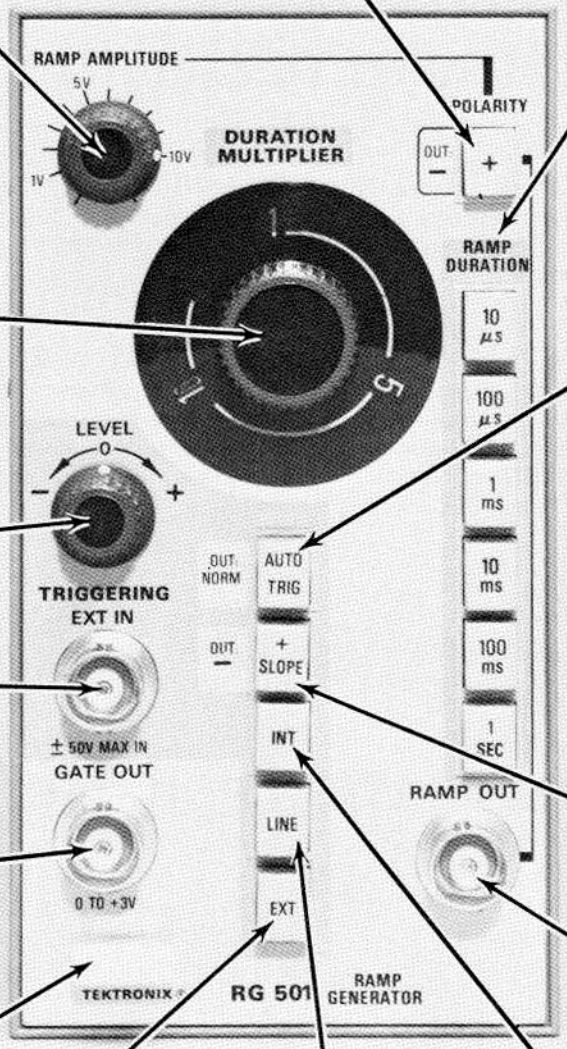

1352-02A

Fig. 1-2. Front panel controls and connectors.

APPLICATIONS

Function Generators

The RG 501 ramp is ideally suited to sweep the VCF or VCO inputs of most function generators. Selectable ramp polarity provides for sweeping frequencies up or down. Variable ramp amplitude and duration provide for controlling the range and rate of the frequency sweep. The RG 501 gate out signal provides for synchronizing the swept oscillator to the sweeper input.

A natural application of the RG 501 would be to pair it with another member of the TM 500 Series, the FG 501 Function Generator. The FG 501 frequency can be swept over a 1000:1 range with the RG 501's 0 to 10 V linear ramp. The output of the FG 501 can then be used to test the response characteristics of frequency sensitive circuits. See Fig. 1-3.

X-Y Monitors

The RG 501 can be used as a source for X- and Y-axis signals to convert an X-Y display to a Y-T display. Set the RG 501 to AUTO TRIG and use the RAMP OUT signal to drive the X-axis. A positive-going ramp will sweep most CRT displays from left to right. Vary the RAMP AMPLITUDE for the desired sweep length. The 10-volt range of the RG 501 should give a full-screen scan on just about any X-Y CRT display.

Use the GATE OUT signal, which is coincident with the RAMP OUT, to drive the Z-axis. The gate's +3 V amplitude is sufficient to unblank most CRT's and provide a usable intensity level.

If the event to be displayed in the Y-axis meets the triggering requirements, it can be used to externally trigger the RG 501, producing a stable display when the LEVEL control is correctly set.

Using time marks and a graticule for the CRT display, a calibrated 3% time base can be generated. See Fig. 1-4.

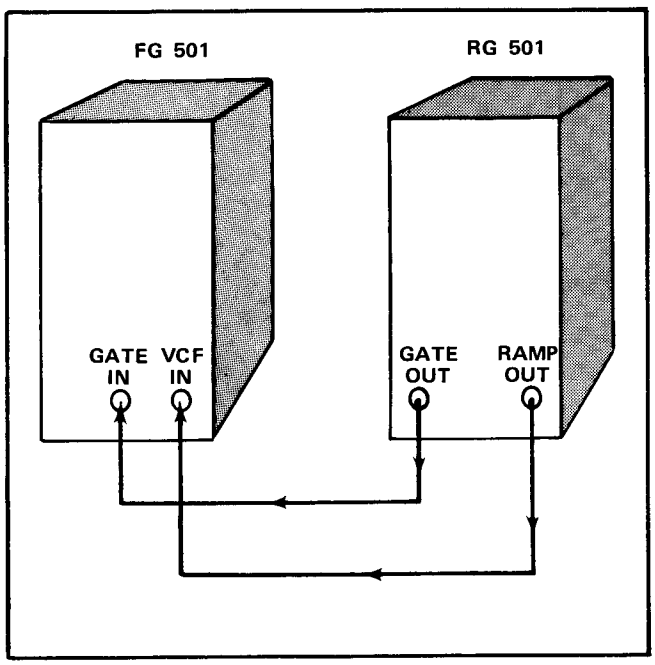

Fig. 1-3. Sweeping and gating a Function Generator synchronously.

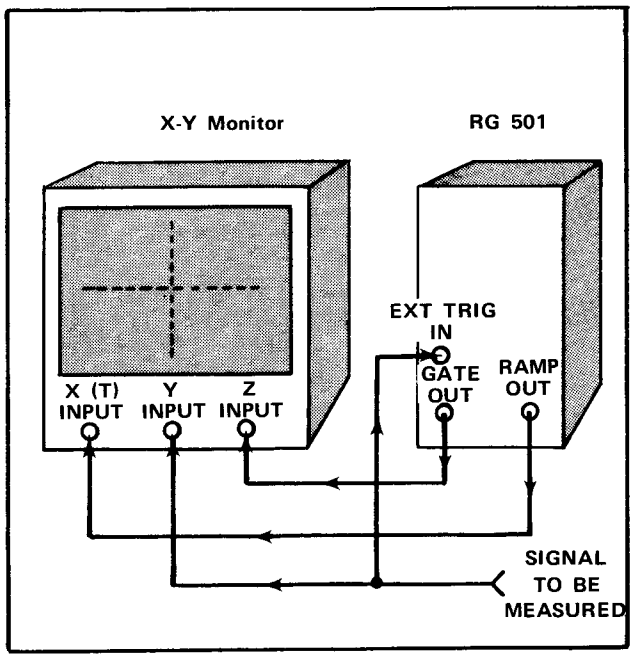

Fig. 1-4. Converting an X-Y display to a Y-T display.

Pulse Generators

The RG 501 can be used as a source for externally triggering pulse generators, such as the TM 500 Series PG 501 Pulse Generator. For applications where the pulse output period is controlled by the period of the triggering signal, such as the PG 501's External Trigger Mode, the fast-rising GATE OUT signal from the RG 501 can provide periods ranging from about 20 μs (50 kHz) to about 10 s (0.1 Hz) at voltage levels sufficient to trigger and reset the PG 501.

For applications where the pulse output period and duration are dependent on the period and duration of the triggering signal, such as the PG 501's External Duration Mode, the RG 501 can provide gating periods ranging from about 20 μs to about 10 s and gate durations from 10 μs, within 3%, to 1 s, within 3%, and to about 11 s using the uncalibrated DURATION MULTIPLIER. See Fig. 1-5.

The RG 501 RAMP OUT signal can be used as a calibrated delay trigger source for external trigger circuits having fixed trigger thresholds within the range of the RAMP AMPLITUDE control.

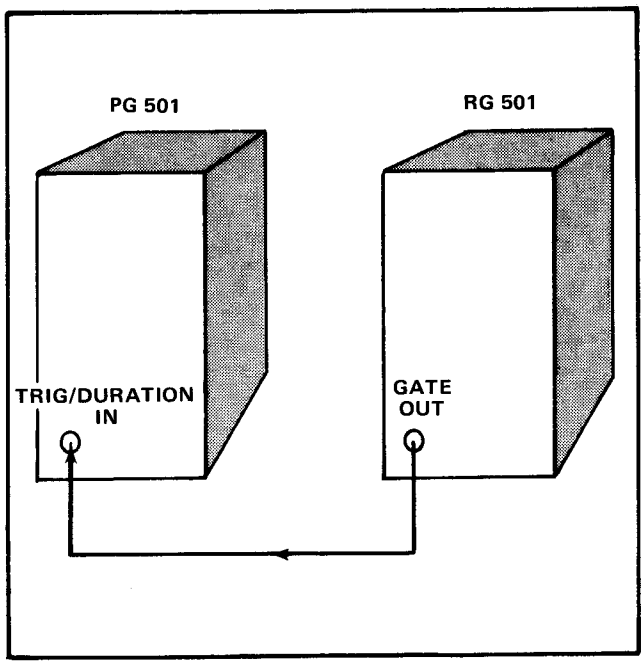

Fig. 1-5. Triggering or gating a Pulse Generator.

REPACKAGING FOR SHIPMENT

If the Tektronix instrument is to be shipped to a Tektronix Service Center for service or repair, attach a tag showing: owner (with address) and the name of an individual at your firm that can be contacted, complete instrument serial number and a description of the service required.

Save and re-use the package in which your instrument was shipped. If the original packaging is unfit for use or not available, repackage the instrument as follows:

1. Obtain a carton of corrugated cardboard having inside dimensions of no less than six inches more than the instrument dimensions; this will allow for cushioning. Refer to the following table for carton test strength requirements.

2. Surround the instrument with polyethylene sheeting to protect the finish of the instrument.

3. Cushion the instrument on all sides by tightly packing dunnage or urethane foam between carton and instrument, allowing three inches on all sides.

4. Seal carton with shipping tape or industrial stapler.

SHIPPING CARTON TEST STRENGTH

Gross Weight (lb)	Carton Test Strength (lb)
0-10	200
10-30	275
30-120	375
120-140	500
140-160	600

SPECIFICATION AND PERFORMANCE CHECK

SPECIFICATION

Ramp

Duration. Range, 1 s to 10 μs; Multiplier, X1 to at least X10; Accuracy, within 3% with MULTIPLIER set to 1 (MULTIPLIER not calibrated).

Linearity. Within 2% of a straight-line plot.

Amplitude. Range, variable from 50 mV or less to at least 10 V, either polarity; DC Level Between Ramps, O V, within 20 mV; Driving Capability, 3 kΩ minimum, 300 pF maximum.

Gate

DURATION. Coincident with ramp.

Amplitude. TTL-compatible, 0 V within 100 mV, to +3 V, within 0.6 V; Risetime, 100 ns or less; Falltime, 100 ns or less.

Source Impedance. 160 Ω, within 5%.

Triggering

Level. Range, at least ±1 V.

Auto. Sweep circuit free-runs in absence of an adequate internal or external signal or in the presence of a signal running at 20 Hz or less.

External. Sensitivity, at least 200 mV peak-to-peak; Response, DC to at least 100 kHz; Input Impedance, 10 kΩ to 20 kΩ, diode-protected; Max Input Voltage, 50 V (DC + peak AC).

Internal. Same as External except that the trigger input is via the rear interface.

Line. Triggers at the line frequency.

Other

Temperature. Operating, 0°C to +50°C; Nonoperating, −40°C to +75°C.

Altitude. Operating, To 15,000 feet; Nonoperating, To 50,000 feet.

PERFORMANCE CHECK

Introduction

This procedure checks the electrical characteristics of the RG 501 that appear at the beginning of this section. If the instrument fails to meet the requirements given in this performance check, the calibration procedure should be performed. This procedure can also be used by an incoming inspection facility to determine acceptability of performance.

The electrical characteristics in this section are valid only if the RG 501 is calibrated at an ambient temperature of +20°C to +30°C and operated at an ambient temperature of 0°C to +50°C.

Tolerances that are specified in this Performance Check procedure apply to the instrument under test and do not include test equipment error. Limits and tolerances

in this procedure are instrument performance requirements only if stated as such in the Specification part of this section.

Test equipment front-panel control settings are listed at the outset of each major segment of this procedure. Thus, only a part of the procedure need be performed if so desired. However, it is advisable to perform the complete procedure to completely verify the performance of the RG 501.

Test Equipment Required

The following test equipment, or equivalent, is required to perform the procedure. Test equipment characteristics listed are the minimum required to verify the performance of the RG 501. Substitute equipment must meet or exceed the stated requirements. All test equipment is assumed to be operating within tolerance.

Special test devices are used where necessary to facilitate the procedure. Most of these are available from Tektronix, Inc., and can be ordered through your local Tektronix Field Office or representative.

Special Interface Connections

The test equipment or the equipment under test may have been altered to fit special application requirements. In such cases, the procedure should be changed to accommodate the instrument alterations, or the instrument should be restored to its original configuration.

TABLE 2-1
List of Test Equipment Requirements

Description	Performance Requirements	Application	Example
Oscilloscope	Dual-trace with Add mode. Vertical sensitivity: 20 mV/div through 5 V/div. Sweep rate: 0.1 s/div, with 10X sweep magnification. Bandwidth: 10 MHz.	Amplitude and Time Measurements.	1. Tektronix T922 oscilloscope. 2. Tektronix 5440 oscilloscope, with 5A38 dual-trace vertical amplifier, and 5B40 Time Base.
Time Mark Generator	Marker period: 10 μs through 5 s, in 1-2-5 sequence. Marker amplitude: At least 200 mV in 50 Ω.	Triggering and timing measurements.	Tektronix TG 501 Time Mark Generator.
Sine Wave Generator	Frequency: 100 Hz to 100 kHz. Amplitude: 200 mV to 4 V p-p into approximately 10 kΩ.	Triggering measurements.	Tektronix SG 502 Oscillator.
Power Module	Three compartments or more.	All tests.	Tektronix TM 503.
Four coaxial cables	Impedance: 50 Ω. Connectors: Male bnc on both ends.	All tests.	Tektronix part no. 012-0057-01.
Two terminations	Impedance: 50 Ω Connectors: bnc.	All tests.	Tektronix part no. 011-0049-01.
Tee connector	Connectors: bnc, two female, and one male.	All tests.	Tektronix part no. 103-0030-00.

Preliminary Procedure

1. Ensure that all power switches are off.

2. Check the rear panel of the Power Module to ensure the indicated line voltage and the line voltage source are the same. Refer to the Installation section of the Power Module manual.

3. Ensure that all test equipment is suitably adapted to the line voltage to be applied.

4. Install the RG 501, Time Mark Generator, and Sine Wave Generator into the Power Module.

5. Connect all test equipment to a suitable line voltage source. Turn all equipment on and allow at least 20 minutes for the equipment to stabilize.

Initial Control Settings

Set the following controls during warm-up time:

RG 501 RAMP GENERATOR

RAMP	
AMPLITUDE	ccw
POLARITY	+
DURATION	1 ms
DURATION MULTIPLIER	cw
TRIGGERING	AUTO TRIG, + SLOPE, EXT.
LEVEL	0

OSCILLOSCOPE

Vertical Amplifier	
Channel 1	
Input Coupling	ac
Volts/Div	20 mV
Channel 2	
Input Coupling	dc
Volts/div	1
Display Mode	CH 1
Trigger Source	CH 1
Time Base	
Time/Div	.5 ms, unmagnified
Triggering	+ Slope, Auto Trigger AC Coupling Internal
Intensity and Focus	Adjust for well-defined display

TIME MARK GENERATOR

Marker Period	.1 ms, calibrated

PERFORMANCE CHECK PROCEDURE

1. Check + And − Ramp Start DC Level (0 volt within 20 mV)

a. Connect a coaxial cable from the RG 501 RAMP OUT connector to the Oscilloscope CH 1 input connector.

b. Adjust the RG 501 RAMP AMPLITUDE control for approximately eight divisions of display.

c. Set the CH 1 input coupling to gnd and center the oscilloscope trace.

d. Set the CH 1 input coupling to dc.

e. CHECK—That the start of the displayed ramp is within one vertical division of graticule center.

f. Set the RG 501 POLARITY switch to −.

g. CHECK—That the start of the displayed ramp is within one vertical division of graticule center.

h. Do not change connections or control settings.

2. Check + And − Ramp Amplitude (50 mV to at least 10 V)

a. Set the CH 1 Volts/Div switch to 10 mV, and vertically center the display.

b. Adjust the RG 501 RAMP AMPLITUDE control fully counter clockwise.

c. CHECK—That for each RAMP DURATION setting on the RG 501, the displayed signal amplitude is no more than five divisions (50 mV negative ramp).[1]

d. Set the RG 501 POLARITY switch to +, and center the display.

[1]If the display is left free-running, the oscilloscope Time/Div setting can be left unchanged at .5 ms/div for the entire step. Otherwise, set the Time/Div switch to provide an appropriate triggered display.

e. CHECK—That for each RAMP DURATION setting on the RG 501, the displayed signal amplitude is no more than five divisions (50 mV positive ramp).[1]

f. Set the RG 501 POLARITY switch to −.

g. Set the CH 1 Volts/Div switch to 2 V.

h. Adjust the RG 501 RAMP AMPLITUDE control fully clockwise, and center the display.

i. CHECK—That for each RAMP DURATION setting on the RG 501, the displayed signal amplitude is at least five divisions (10 V negative ramp).[1]

j. Set the RG 501 POLARITY switch to +, and center the display.

k. CHECK—That for each RAMP DURATION setting on the RG 501, the displayed signal amplitude is at least five divisions (10 V positive ramp).[1]

l. Do not change connections or control settings.

3. Check X1 Ramp Duration (within 3%)

a. Set the RG 501 RAMP DURATION control to 1 ms.

b. Set the Oscilloscope Time/Div switch to .1 ms, and the Trigger Source switch to Ext.

c. Set the Oscilloscope vertical mode to Add, the CH 1 input coupling to gnd, and the CH 1 Volts/Div switch to 5.

d. Position the trace two divisions below graticule center and to the left edge of graticule.

e. Set the CH 1 input coupling to dc.

f. Connect a coaxial cable from the RG 501 GATE OUT connector to the Time Base Ext Trig input connector.

g. Connect a bnc tee connector to the Marker Out connector. Connect a coaxial cable to each side of the bnc tee connector, and a 50 Ω termination at the end of each cable.

h. Connect one of the terminated coaxial cables to the RG 501 Ext In connector; connect the other coaxial cable to the CH 2 input connector.

i. Adjust the RG 501 LEVEL control and the Oscilloscope controls for a stable display.

j. Adjust the Horizontal Positioning of the Oscilloscope to place the last time mark over the center graticule line.

k. Select Swp Mag, and reposition the leading edge of the last displayed time mark to the center graticule line.

l. Disconnect the coaxial cable and termination from the CH 2 input connector.

m. CHECK—That the falling edge of the ramp starts at the center graticule line, within three divisions.

n. Release the Swp Mag button, and reposition the start of the trace to the left side of the graticule.

o. Do not change connections or control settings.

4. Check X11 Ramp Length (within 3%)

a. Reconnect the coaxial cable and termination to the CH 2 input connector.

b. Set the Time Mark Generator for 2 ms markers, and the oscilloscope Time/Div switch to 2 ms.

c. Set the RG 501 TRIGGERING SLOPE to −, and the DURATION MULTIPLIER fully counter clockwise (X11).

d. CHECK—Ramp ends between fifth and sixth markers.

e. Position the falling edge of the ramp at graticule center.

[1]If the display is left free-running, the oscilloscope Time/Div setting can be left unchanged at .5 ms/div for the entire step. Otherwise, set the Time/Div switch to provide an appropriate triggered display.

f. Select 10X Swp Mag, and position the time mark just preceding the ramp falling edge to the left edge of the graticule.

g. CHECK—Ramp ends at five divisions past marker, within 1.6 divisions.

h. Do not change connections or control settings.

5. Check Ramp Duration (within 3%)

a. Adjust the RG 501 DURATION MULTIPLIER control fully clockwise, and set the RAMP DURATION control to 10 μs.

b. Set the Oscilloscope Time/Div switch to 1 μs, and Swp Mag off.

c. Set the Time Mark Generator for 1 μs markers.

d. Adjust the RG 501 LEVEL control for a stable display.

e. Horizontally position the right-most displayed time mark over the center graticule line.

f. Disconnect the coaxial cable and termination from the CH 2 Input.

g. CHECK—That the ramp falling edge occurs at the center graticule line, within 0.3 division.

h. Using Table 2-2, repeat this check for the remaining RAMP DURATION setting.

TABLE 2-2
Ramp Duration Checks

Time/Div	Marker	RAMP DURATION
10 μs	10 μs	100 μs
.1 ms	.1 ms	1 ms
10 ms	10 ms	10 ms
.1 s	.1 s	1 s

NOTE

Unstable triggering may occur at the slower sweep rates, e.g., .1 s, with the RG 501 and the test oscilloscope triggering mode set at auto trigger. If this occurs, set the triggering mode to normal trigger and adjust the triggering controls for a stable display.

i. After completing this step, remove all cables.

Set the equipment controls as follows:

RG 501 RAMP GENERATOR

RAMP	
AMPLITUDE	cw
POLARITY	+
DURATION	1 s
DURATION MULTIPLIER	cw
TRIGGERING	AUTO TRIG, + SLOPE, EXT
LEVEL	0

OSCILLOSCOPE

Vertical Amplifer	
Channel 1	
Input Coupling	dc
Volts/Div	5
Channel 2	
Input Coupling	dc
Volts/Div	.5
Display Mode	CH 2
Trigger Source	CH 2
Time Base	
Time/Div	1 s, unmagnified
Triggering	+ Slope Auto Trigger AC Coupling Internal
Intensity and Focus	Adjust for well-defined display

TIME MARK GENERATOR

Marker Period	5 s, calibrated

6. Check Gate Out Amplitude (0 V within 100 mV to +3 V within 600 mV)

a. Position the CH 2 trace to the bottom graticule line.

b. Connect a coaxial cable from the RG 501 GATE OUT connector to the CH 2 input connector.

c. CHECK—(using Table 2-3) That for all RAMP DURATION settings of the RG 501, the lower level of the display is at the bottom graticule line, within 0.2 division and the upper level is 6 divisions above the bottom graticule line within 1.2 divisions.

TABLE 2-3
Gate Out Amplitude Checks

Oscilloscope Time/Div	RG 501 RAMP DURATION
1 s	1 s
.1 s	100 ms
10 ms	10 ms
1 ms	1 ms
.1 ms	100 μs
10 μs	10 μs

d. Do not change connections or control settings.

7. Check Gate Out Risetime and Falltime (less than 100 ns)

a. Position the bottom of the CH 2 display one division up from the bottom graticule line.

b. Adjust the Volts/Div Variable control for a five-division display.

c. Set the Oscilloscope Time/Div switch to .1 μs.

d. Adjust the Oscilloscope Trigger Level control for a triggered display and position the display for a risetime measurement.

e. CHECK—That the waveform rises from the 10% to 90% points, within 100 ns (one major horizontal division).

f. Set the Oscilloscope Trigger Slope switch to − and adjust the Level control for a triggered display.

g. CHECK—That the waveform falls from the 90% to 10% points, within 100 ns (one major horizontal division).

h. Set the Oscilloscope trigger controls to + Slope, and the CH 2 Volts/Div Variable control to the calibrated position.

i. Do not change connections or control settings.

8. Check Gate Out Duration (Coincident with ramp)

a. Connect a coaxial cable from the Time Mark Generator Marker Out connector, through a 50 Ω termination, to the RG 501 EXT IN connector.

b. Set the RG 501 triggering to EXT, + SLOPE, and NORM.

c. Connect a coaxial cable from the RG 501 RAMP OUT connector to the Oscilloscope CH 1 input connector.

d. Set the Oscilloscope CH 2 Volts/Div switch to 2, the Display Mode control to Dual Trace, the Trigger Source switch to CH2, and the Time/Div switch to 5 μs.

e. Set the Time Mark Generator Marker Period to 20 μs.

f. Adjust the RG 501 and Oscilloscope triggering level controls for a stable display.

g. CHECK—(Using Table 2-4) That at each RAMP DURATION setting, the ramp and the positive portion of the gate waveform occur for approximately the same length of time.

TABLE 2-4
Equipment Settings for Gate Duration Checks

RAMP DURATION	Time Marker Period	Time/Div
10 μs	20 μs	5 μs
100 μs	.2 ms	50 μs
1 ms	2 ms	.5 ms
10 ms	20 ms	5 ms
100 ms	.2 s	50 ms
1 s	2 s	.5 s

h. Disconnect all cables.

Set the Equipment Controls as follows:

RG 501 RAMP GENERATOR

RAMP	
AMPLITUDE	cw
POLARITY	+
DURATION	10 μs
DURATION MULTIPLIER	cw
TRIGGERING	AUTO, + SLOPE, EXT
LEVEL	0

OSCILLOSCOPE

Vertical Amplifer	
Channel 1	
Input Coupling	dc
Volts/Div	1
Channel 2	
Input Coupling	dc
Volts/Div	5
Display Mode	Add
Trigger Source	CH 1
Time Base	
Time/Div	.2 ms, unmagnified
Triggering	+ Slope, Auto Trigger AC Coupling Internal
Intensity and Focus	Adjust for well-defined display

SINE WAVE GENERATOR

Frequency	1 kHz
Attenuation	ccw (minimum amplitude)

9. Check + and − Slope Range (at least +1 V and −1 V)

a. Connect a bnc tee connector to the RG 501 EXT IN connector.

b. Connect a coaxial cable from the Sine Wave Generator sine-wave output connector to the bnc tee connector.

c. Vertically position the CH 1 trace at graticule center.

d. Horizontally position the start of the trace at the left edge of the graticule.

e. Connect a coaxial cable from the open side of the bnc tee connector to the CH 1 input connector.

f. Adjust the Sine Wave Generator Attenuation control for a four-division display.

g. Adjust the Oscilloscope Trigger Level control so that the start of the displayed sine wave occurs at the left edge of the graticule, equidistant from top and bottom of the graticule.

h. Connect a coaxial from the RG 501 RAMP OUT connector to the CH 2 input connector.

i. Adjust the RG 501 LEVEL control to position the markers at the center horizontal graticule line, i.e., equidistant from top and bottom.

j. CHECK—That the index dot on the RG 501 LEVEL control is near 0.

k. Adjust the RG 501 LEVEL control and observe that the marker can be positioned at least one major division below and at least one major division above graticule center before the marker disappears.

l. Change the RG 501 Triggering to − SLOPE.

m. Repeat part k of this step.

n. Disconnect all coaxial cables.

10. Check External Trigger Sensitivity (at least 200 mV dc to 100 kHz)

a. Set the Oscilloscope CH 1 Volts/Div switch to 50 mV, the Display Mode to CH 1, and the RG 501 Triggering to NORM, +SLOPE.

b. Connect a coaxial cable from the Sine Wave Generator sine-wave output connector, via a bnc tee connector, to the CH 1 input connector.

c. Adjust the Sine Wave Generator Attenuation control for a four-division display.

d. Connect a coaxial cable from the open side of the bnc tee connector to the RG 501 EXT IN connector.

e. Set the Sine Wave Generator Frequency controls to 100 kHz.

f. Set the CH 2 Volts/Div switch to 5, the Display Mode to CH 2, the Trigger Source switch to CH 2, and the Time/Div switch to 20 μs.

g. Connect a coaxial cable from the RG 501 RAMP OUT connector to the Oscilloscope CH 2 input connector.

h. CHECK—That by adjusting the RG 501 LEVEL control, a stable display can be obtained.

i. Set the Oscilloscope Time/Div switch to 10 ms, and the RAMP DURATION control to 10 ms.

j. Repeat part h of this step.

11. Check Norm/Auto Low Frequency Triggering

a. Set the Oscilloscope Trigger Source and Display Mode switches to CH 1, Norm trigger. Ensure that the RG 501 is set for AUTO triggering.

b. Set the Sine Wave Generator Frequency controls to 30 Hz.

c. Adjust the Oscilloscope Level control for a stable display.

d. Adjust the sine wave attenuation for a four-division display.

e. Set the Oscilloscope Trigger Source switch to CH 2 and the Display Mode switch to Dual Trace-Chopped.

f. CHECK—That a stable ramp signal display (one ramp per sine cycle) can be obtained by adjusting the RG 501 LEVEL control.

g. Decrease the sine wave frequency (and sweep rate to display to or more cycles) until the ramp signal becomes unstable or doubles in repetition rate.

h. CHECK—That the sine wave frequency is 20 Hz or less.

i. Select NORM trigger on the RG 501.

j. CHECK—That a stable ramp signal display can be obtained, and the triggering is one ramp per sine wave cycle.

12. Check Line Triggering

a. Set the RG 501 LINE switch in, and the Oscilloscope Time/Div switch to 2 ms.

b. CHECK—That the displayed ramp period is approximately 8.5 divisions.

c. Disconnect all cables and turn off all equipment. This completes the Performance Check procedure.

WARNING

THE FOLLOWING SERVICING INSTRUCTIONS ARE FOR USE BY QUALIFIED PERSONNEL ONLY. TO AVOID PERSONAL INJURY, DO NOT PERFORM ANY SERVICING OTHER THAN THAT CONTAINED IN OPERATING INSTRUCTIONS UNLESS YOU ARE QUALIFIED TO DO SO.

ADJUSTMENT

Introduction

This adjustment procedure is to be used to restore the RG 501 to original performance specifications. Adjustment need not be performed unless the instrument fails to meet the requirements listed in the Specification section, or the Performance Check cannot be completed satisfactorily.

Completion of all adjustment steps in this procedure ensures that the instrument will meet the performance requirements listed in the Specification section. However, to fully ensure satisfactory performance, it is recommended that the Performance Check be performed after any adjustment is made.

Services Available

Tektronix, Inc. provides complete instrument repair and adjustment at local Field Service Centers and at the Factory Service Center. Contact your local Tektronix Field Office or representative for further information.

Test Equipment Required

The test equipment listed at the beginning of the Performance Check, with the exception of the Sine-Wave Generator, is required to perform the Adjustment Procedure. In addition, a DC Voltmeter with the following specifications is required for checking the dc power supplies: Range: ±15 volts; Accuracy: 1% or better; Recommended equipment: Tektronix DM 501 Digital Multimeter.

A flexible plug-in extender, Tektronix Part No. 067-0645-01, is useful for troubleshooting or adjusting the RG 501; however, the complete Adjustment Procedure can be performed without use of the extender.

Preparation

a. Remove the left-hand side cover of the RG 501 to gain access to the component side of the circuit board. Pull the rear end of the side cover outward from the side of the instrument (the cover snaps into place).

b. If the RG 501 is to be adjusted without use of the flexible plug-in extender, remove the Power Module cabinet cover.

c. Install the RG 501 into the Power Module, or if appropriate, connect the RG 501 to the Power Module by means of the flexible plug-in extender.

d. Set the Power Module for the line voltage to be applied (see Power Module manual) and connect it to the line voltage source. Be sure that the power switch is off.

e. Install all TM 500-series equipment, including the RG 501, into the Power Module.

f. Connect all test equipment to a suitable line voltage source.

g. Turn on all test equipment and allow at least twenty minutes for the equipment to warm up and stabilize.

Initial Control Settings

Set the following controls during warm-up time:

RG 501 RAMP GENERATOR

RAMP	
AMPLITUDE	ccw
POLARITY	+
DURATION	1 ms
DURATION MULTIPLIER	cw
TRIGGERING	AUTO TRIG, + SLOPE, EXT.
LEVEL	0

OSCILLOSCOPE

Vertical Amplifier	
Channel 1	
Input Coupling	ac
Volts/Div	20 mV

Channel 2	
Input Coupling	dc
Volts/Div	1
Display Mode	CH 1
Trigger Source	CH 1
Time Base	
Time/Div	.5 ms, unmagnified
Triggering	+ Slope, Auto Trigger AC Coupling Internal
Intensity and Focus	Adjust for well-defined display

TIME MARK GENERATOR

Marker Period	.1 ms, calibrated

ADJUSTMENT PROCEDURE

1. Check Power Supplies

a. Connect the dc voltmeter leads to ground and the +5-volt test point. Refer to Fig. 3-1 for test point locations.

b. CHECK—For a voltmeter reading of +5 volts ±0.25 volt.

c. Move the positive meter lead to the +15-volt test point, leaving the other meter lead connected to ground.

d. CHECK—For a meter reading of +15 volts ±0.75 volt.

e. Connect the dc voltmeter leads between the −15-volt test point and ground.

f. CHECK—For a voltmeter reading of −15 volts ±0.75 volt.

g. Disconnect the meter leads from the RG 501.

2. Adjust + And − Ramp Start DC Level (0 volt within 20 mV)

a. Connect a coaxial cable from the RG 501 RAMP OUT connector the the Oscilloscope CH 1 input connector.

b. Adjust the RG 501 RAMP AMPLITUDE control for approximately eight divisions of display.

c. Set the CH 1 input coupling to gnd and center the oscilloscope trace.

d. Set the CH 1 input coupling to dc.

e. CHECK—That the start of the displayed ramp is within one vertical division of graticule center.

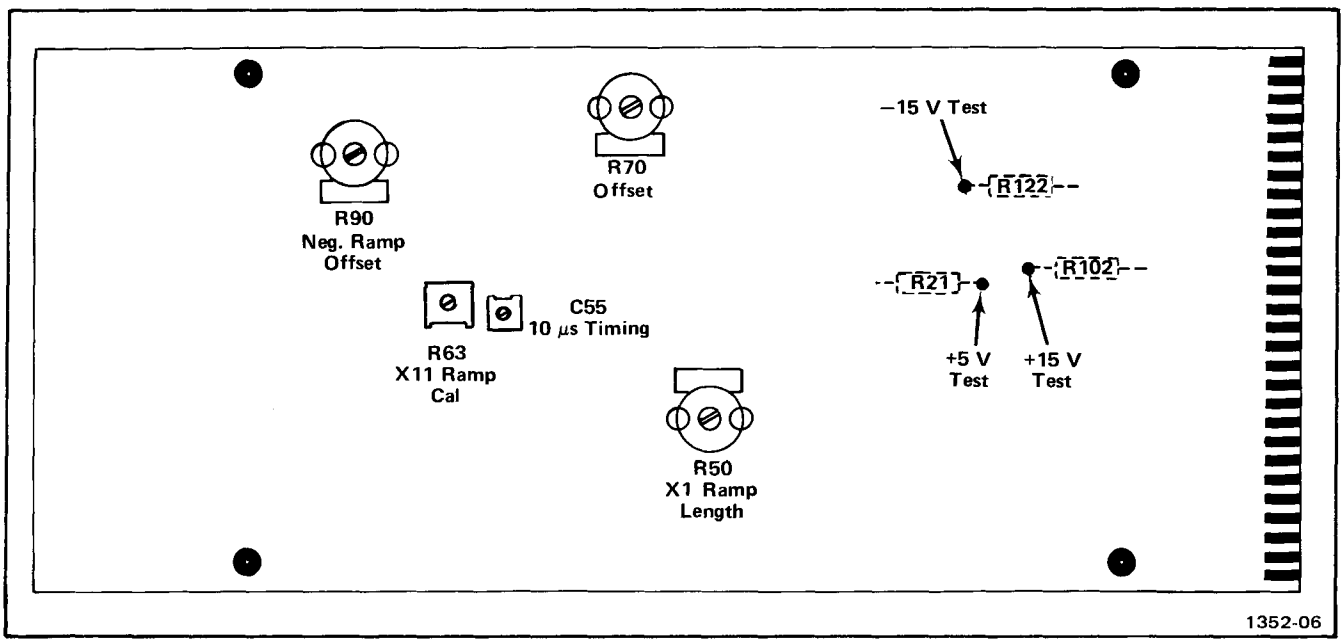

Fig. 3-1. Adjustment and Test Point locations.

f. ADJUST—R70, Offset, to position the start of the displayed ramp within one vertical division of graticule center.

g. Set the RG 501 POLARITY switch to −.

h. CHECK—That the start of the displayed ramp is within one vertical division of graticule center.

i. ADJUST—R90, Negative Ramp Offset, to position the start of the displayed ramp within one vertical division of graticule center.

3. Check X1 Ramp Duration (within 3%)

a. Set the RG 501 RAMP DURATION switch to 1 ms, the POLARITY switch to +, and the RAMP AMPLITUDE control fully clockwise.

b. Set the Oscilloscope Time/Div switch to .1 ms and the Trigger Source switch to Ext.

c. Set the Oscilloscope vertical mode to Add, the CH 1 input coupling to gnd, and the CH 1 Volts/Div to 5.

d. Position the trace two divisions below graticule center and to the left edge of graticule.

e. Set the CH 1 input coupling to dc.

f. Connect a coaxial cable from the RG 501 GATE OUT connector to the Time Base Ext Trig input connector.

g. Connect a bnc tee connector to the Marker Out connector. Connect a coaxial cable to each side of the bnc tee connector, and a 50 Ω termination at the end of each cable.

h. Connect one of the terminated coaxial cables to the RG 501 EXT IN connector; connect the other coaxial cable to the CH 2 input connector.

i. Adjust the RG 501 LEVEL control and the Oscilloscope controls for a stable display.

j. Adjust the Horizontal Positioning of the Oscilloscope to place the last time mark over the center graticule line.

k. Select Swp Mag, and reposition the leading edge of the last displayed time mark to the center graticule line.

l. Disconnect the coaxial cable and termination from the CH 2 input connector.

m. CHECK—That the falling edge of the ramp starts at the center graticule line, within three divisions.

n. ADJUST—R50, X1 Ramp Length, to position the falling edge of the ramp at the center graticule line, within three divisions.

o. Release the Swp Mag button, and reposition the start of the trace to the left side of the graticule.

p. Do not change connections or control settings.

4. Adjust X11 Ramp Length (within 3%)

a. Reconnect the coaxial cable and termination to the CH 2 input connector.

b. Set the Time Mark Generator for 2 ms markers, and the Oscilloscope Time/Div switch to 2 ms.

c. Set RG 501 TRIGGERING SLOPE switch to −, and the DURATION MULTIPLIER control fully counterclockwise (X11).

d. CHECK—Ramp ends between fifth and sixth markers.

e. Position the falling edge of the ramp at graticule center.

f. Select 10X Swp Mag, and position the time mark just preceding the ramp falling edge to the left edge of the graticule.

g. CHECK—Ramp ends at five divisions past marker, within 1.6 divisions.

h. ADJUST—R63, X11 Ramp Cal, until ramp ends at five divisions past marker, within 1.6 divisions.

i. Do not change connections or control settings.

5. Adjust Ramp Duration (within 3%)

a. Adjust the RG 501 DURATION MULTIPLIER control fully clockwise, and set the RAMP DURATION switch to 10 μs.

b. Set the Oscilloscope Time/Div to 1 μs, and Swp Mag off.

c. Set the Time Mark Generator for 1 μs markers.

d. Adjust the RG 501 LEVEL control for a stable display.

e. Horizontally position the right-most displayed time mark over the center graticule line.

f. Disconnect the coaxial cable and termination from the CH 2 Input.

g. CHECK—That the ramp falling edge occurs at the center graticule line, within 0.3 division.

h. ADJUST—C55, 10 μs Timing, to position the ramp falling edge at the center graticule line.

i. Using Table 3-1, repeat this check for the remaining RAMP DURATION settings.

TABLE 3-1

Ramp Duration Checks

Time/Div	Marker	RAMP DURATION
10 μs	10 μs	100 μs
.1 ms	.1 ms	1 ms
10 ms	10 ms	10 ms
.1 s	.1 s	1 s

NOTE

Unstable triggering may occur at the slower sweep rates, e.g., .1 s, with the RG 501 and the Oscilloscope triggering mode set at auto trigger. If this occurs, set the triggering mode to normal trigger and adjust the triggering controls for a stable display.

j. After completing this step, remove all cables.

MAINTENANCE

Preventive Maintenance

There are no special preventive maintenance procedures that apply to the RG 501. Refer to the Power Module instruction manual for general preventive maintenance procedures and instructions.

Corrective Maintenance

Refer to the Power Module instruction manual for general corrective maintenance procedures and instructions.

Troubleshooting

Use the Performance Check, Adjustment Procedure, and Circuit Description as aids to locate trouble in the event of equipment failure. The test equipment listed in the Performance Check and Adjustment Procedures will prove useful in troubleshooting the RG 501.

CIRCUIT DESCRIPTION

Introduction

This description is broken down into the following parts: Trigger Circuits, Sweep Logic, Miller Integrator, Timing Circuits, Output Amplifier, Gate Output Amplifier, and Power Supplies. Refer to Fig. 5-1, Functional Block Diagram, and the Ramp Generator Schematic Diagram while reading this description.

Trigger Circuits

Trigger Selection. Switch S10E (AUTO TRIG) disconnects a positive voltage level from pin 13 of U30, enabling bright baseline operation. The +SLOPE switch, S10D, connects a positive voltage level to pin 5 of U30 for positive-slope triggering. S10A, B, and C select triggering signals respectively from EXT IN, the line trigger source, and internally via the Power Module main interface board. The External and Internal circuits each provide a static 20 kΩ impedance at dc, changing to about 10 kΩ as the limiter diodes conduct to clip the incoming signal. The line circuit attenuates ac voltage from a secondary winding in the Power Module, producing a one-volt, line-frequency trigger signal.

Trigger Input Circuit. Emitter-follower Q15 is the current source through R19, driving pin 4 of the Sweep Logic IC, U30. The LEVEL control, R27, biases pin 4 of U30 to different current levels such that the IC can trigger at any point within ±1 V of the input signal.

Sweep Logic

U30 controls trigger initiation, slope selection, bright baseline operation, sweep start and stop, and holdoff timing. See Table 5-1.

Miller Integrator

U50 generates a linear, positive-going ramp, controls its length and timing, and resets the sweep logic in U30. See Table 5-2.

TABLE 5-1

Sweep Logic U30

Pin	Function
1,Reset	Current (logic 1, high state) for at least 20 ns ends ramp, regardless of how far the ramp has run up. No current (logic 0, low state) allows U30 to operate.
3,Ground	Circuit ground.
4,Trigger Input	Analog input, low impedance. Accepts analog current trigger signal. Trigger threshold: zero current, ±100 μA.
5,Slope Select	Logic 1 permits trigger to be initiated on the positive slope of the trigger signal. Logic 0 permits trigger to be initiated on the negative slope of the trigger signal.
6,Not Used	Held at logic 1.
8,GND, Substrate	Reference ground.
11,Holdoff Timing	Connects timing components which set trigger lockout period after end of ramp. Holdoff capacitor discharges when ramp starts and holdoff timing starts at end of ramp as holdoff capacitor charges. When upper threshold is reached, a new ramp can be started.
12,Bright Baseline Timing/Off	Used in Auto Triggered mode to connect timing components that set the time the bright baseline is off following trigger recognition. If triggering signal is absent or occurring at a rate less than 20 Hz, capacitor charges toward +3.5-volt threshold. Above this level, U30 is conditioned to provide a free running sweep at a rate determined by the sweep timing and holdoff RC. As soon as a trigger arrives at pin 4 of U30, pin 12 is driven to ground and C35 is discharged.

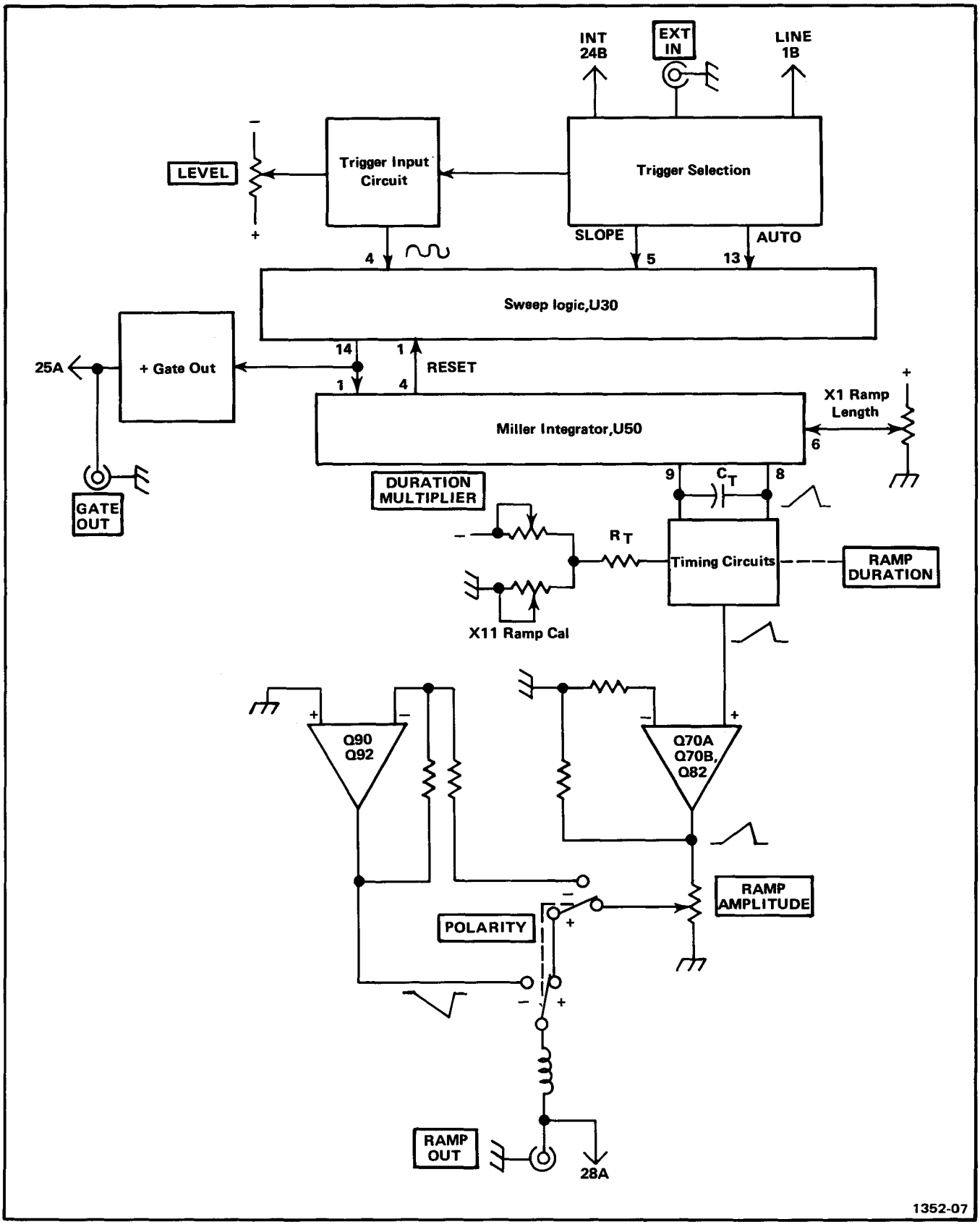

Fig. 5-1. Functional Block Diagram.

TABLE 5-1 (cont)

Pin	Function
13,Bright Baseline Control	Current into pin (logical 1 for ≥20 ns keeps pin 12 at ground, holding bright baseline off. Baseline remains off for one timing period after current level is removed. No input (logical 0) allows bright baseline to function (see pin 12).
14,+ Gate Out	Provides a +5 V (logic 1) source through R40 during ramp runup, driving current into pin 1 of the Miller Integrator. Logic 0 ends ramp.
16,Power Supply	Provides V_{CC} of +5 V.

TABLE 5-2

Miller Integrator U50

Pin	Function
1,Sweep Gate In	Current into pin 1 results in a linear voltage ramp at pin 8.
2,Oscillation Suppressor	Connects discrete components to prevent oscillation of the integrator.
3,Ground	Provides a reference ground.
4,Delayed Gate Out	Provides reset logic to pin 1, U30 when output level on pin 8 reaches the level set on pin 6 by R50.
5,Not Used	Held at logic 1.
6,Ramp Length	Provides the dc reference level for the internal comparator to set up "end of ramp" logic.
7,Power Supply	Provides V_{CC} of +15 volts.
8,Output	Produces a linear voltage ramp out when current is gated into pin 1. Ramp is positive-going with an amplitude of approximately 0 to 9 volts.
9,Timing Current Summing Node	Connects timing components which determine the ramp rate.
10,Substrate	≈ −13 mA from R42.

Timing Circuits

S50, RAMP DURATION, connects timing capacitors across pins 8 and 9 of U50 and connects holdoff timing components to pin 11 of U30. With DURATION MULTIPLIER R56 at X1 (fully cw), R55 is the common R_T for all the switched timing positions. R50, X1 Ramp Length, establishes the dc reference level at pin 6 of U50 for "end of ramp" logic. When R56 is fully ccw, R63 calibrates the ramp for a X11 value.

Output Amplifier

A positive-going ramp of about 9 V is fed into the non-inverting input of an operational amplifier formed by Q70A, Q70B, and Q82. R70 offsets the ramp-start potential at the positive input of the operational amplifier, providing adjustment for a zero-volt starting point of the output signal. Closed-loop gain of the stage is established by the ratio of R74 to R75. R75 feeds the output signal back to the inverting input, the base of Q70B. R85, RAMP

AMPLITUDE attenuates the signal to the output. Q78, R83 and CR80 act as a current limit for the output stage. L85 reduces any tendency to oscillate with reactive loads.

Q90 and Q92 form a unity gain, inverting feed-back amplifier. R90 and R92 offset the base of Q90, providing adjustment for zero volt starting point of the negative-going ramp. Open loop gain of the amplifier is set by the ratio of R95 to the forward resistance of CR89. Closed loop gain is set by the ratio of R94 to R86. CR89 also temperature-compenstates the emitter-base junction of Q90. Current limiting for short circuit protection is provided by R98 in the collector of Q92.

Gate Out Amplifier

Q44 and Q46 buffer the positive-going gate output signal from the Sweep Logic IC, U30. R47 is the effective output impedance at the front panel GATE OUT connector, J45.

Power Supplies

+5 V Supply. An unregulated dc voltage from the mainframe is supplied to the input of a three-terminal voltage regulating IC with built-in short-circuit protection. The +5 V output is decoupled by C110.

+15 V Supply. A 15 volt zener, VR100, establishes a reference voltage at the non-inverting input of U100, an operational amplifier connected in a voltage-follower configuration. Current to the load is supplied via R102 and an NPN series-pass transistor mounted in the Power Module. Changes in the load are fed back to the inverting input of U100. A short circuit in the load will cause a voltage drop across R102 sufficient to turn on Q100 which takes base current from the series-pass, thus shutting it off. C102 decouples the +15 V supply.

−15 V Supply. A 9 volt, temperature-compensated zener, VR120, establishes a reference voltage at the non-inverting input of U120, an operational amplifier connected in a voltage-follower configuration. The regulated output voltage of −15 V occurs as a result of the precision dividers R124 and R126 establishing −9 V at the inverting input. Current to the load is supplied via R122 and a PNP series-pass transistor mounted in the Power Module. Load changes are sensed across R124, causing U120 to change the base drive to the series-pass until the output returns to −15 V and the fed-back, inverting input of U120 returns to −9 V. Short circuit protection is provided by Q120. As a voltage drop occurs across R122, Q120 will begin to turn on and take output current from U120 until the series-pass is turned completely off. C122 decouples the −15 V supply.

OPTIONS

(No options are available at this time.)

REPLACEABLE ELECTRICAL PARTS

PARTS ORDERING INFORMATION

Replacement parts are available from or through your local Tektronix, Inc. Field Office or representative.

Changes to Tektronix instruments are sometimes made to accommodate improved components as they become available, and to give you the benefit of the latest circuit improvements developed in our engineering department. It is therefore important, when ordering parts, to include the following information in your order: Part number, instrument type or number, serial number, and modification number if applicable.

If a part you have ordered has been replaced with a new or improved part, your local Tektronix, Inc. Field Office or representative will contact you concerning any change in part number.

Change information, if any, is located at the rear of this manual.

SPECIAL NOTES AND SYMBOLS

X000	Part first added at this serial number
00X	Part removed after this serial number

ITEM NAME

In the Parts List, an Item Name is separated from the description by a colon (:). Because of space limitations, an Item Name may sometimes appear as incomplete. For further Item Name identification, the U.S. Federal Cataloging Handbook H6-1 can be utilized where possible.

ABBREVIATIONS

ACTR	ACTUATOR	PLSTC	PLASTIC
ASSY	ASSEMBLY	QTZ	QUARTZ
CAP	CAPACITOR	RECP	RECEPTACLE
CER	CERAMIC	RES	RESISTOR
CKT	CIRCUIT	RF	RADIO FREQUENCY
COMP	COMPOSITION	SEL	SELECTED
CONN	CONNECTOR	SEMICOND	SEMICONDUCTOR
ELCTLT	ELECTROLYTIC	SENS	SENSITIVE
ELEC	ELECTRICAL	VAR	VARIABLE
INCAND	INCANDESCENT	WW	WIREWOUND
LED	LIGHT EMITTING DIODE	XFMR	TRANSFORMER
NONWIR	NON WIREWOUND	XTAL	CRYSTAL

CROSS INDEX—MFR. CODE NUMBER TO MANUFACTURER

Mfr. Code	Manufacturer	Address	City, State, Zip
00853	SANGAMO ELECTRIC CO., S. CAROLINA DIV.	P O BOX 128	PICKENS, SC 29671
01121	ALLEN-BRADLEY COMPANY	1201 2ND STREET SOUTH	MILWAUKEE, WI 53204
04222	AVX CERAMICS, DIVISION OF AVX CORP.	P O BOX 867, 19TH AVE. SOUTH	MURTLE BEACH, SC 29577
04713	MOTOROLA, INC., SEMICONDUCTOR PROD. DIV.	5005 E MCDOWELL RD,PO BOX 20923	PHOENIX, AZ 85036
05091	TRI-ORDINATE CORPORATION	343 SNYDER AVENUE	BERKELEY HEIGHTS, NJ 07922
07910	TELEDYNE SEMICONDUCTOR	12515 CHADRON AVE.	HAWTHORNE, CA 90250
27014	NATIONAL SEMICONDUCTOR CORP.	2900 SEMICONDUCTOR DR.	SANTA CLARA, CA 95051
32997	BOURNS, INC., TRIMPOT PRODUCTS DIV.	1200 COLUMBIA AVE.	RIVERSIDE, CA 92507
34553	AMPEREX ELECTRONIC CORP., COMPONENT DIV.	35 HOFFMAN AVE.	HAPPAUGE, NY 11787
56289	SPRAGUE ELECTRIC CO.		NORTH ADAMS, MA 01247
71450	CTS CORP.	1142 W. BEARDSLEY AVE.	ELKHART, IN 46514
71744	CHICAGO MINIATURE LAMP WORKS	4433 RAVENSWOOD AVE.	CHICAGO, IL 60640
72982	ERIE TECHNOLOGICAL PRODUCTS, INC.	644 W. 12TH ST.	ERIE, PA 16512
80009	TEKTRONIX, INC.	P O BOX 500	BEAVERTON, OR 97077
87034	ILLUMINATED PRODUCTS INC., A SUB OF OAK INDUSTRIES, INC.	2620 SUSAN ST, PO BOX 11930	SANTA ANA, CA 92711
90201	MALLORY CAPACITOR CO., DIV. OF P. R. MALLORY AND CO., INC.	3029 E WASHINGTON STREET P O BOX 372	INDIANAPOLIS, IN 46206
91637	DALE ELECTRONICS, INC.	P. O. BOX 609	COLUMBUS, NE 68601

Ckt No.	Tektronix Part No.	Serial/Model No. Eff	Dscont	Name & Description	Mfr Code	Mfr Part Number
A1	670-2213-00	B010100	B041819	CKT BOARD ASSY:MAIN	80009	670-2213-00
A1	670-2213-01	B041820		CKT BOARD ASSY:MAIN	80009	670-2213-01
C5	281-0523-00			CAP.,FXD,CER DI:100PF,+/-20PF,500V	72982	301-000U2M0101M
C8	281-0523-00			CAP.,FXD,CER DI:100PF,+/-20PF,500V	72982	301-000U2M0101M
C10	283-0187-00	B010100	B029999	CAP.,FXD,CER DI:0.047UF,10%,400V	72982	8131N401X5R473K
C10	283-0341-00	B030000		CAP.,FXD,CER DI:0.047UF,10%,100V	72982	8131N145X7R0473K
C15	281-0523-00			CAP.,FXD,CER DI:100PF,+/-20PF,500V	72982	301-000U2M0101M
C35	290-0247-00			CAP.,FXD,ELCTLT:5.6UF,10%,6V	56289	162D565X9006CD2
C37	290-0244-00			CAP.,FXD,ELCTLT:0.47UF,5%,35V	56289	162D474X5035BC2
C38	281-0525-00			CAP.,FXD,CER DI:470PF,+/-94PF,500V	04222	7001-1364
C40	281-0504-00			CAP.,FXD,CER DI:10PF,+/-1PF,500V	72982	301-055C0G0100F
C42	283-0177-00			CAP.,FXD,CER DI:1UF,+80-20%,25V	72982	8131N039 E 105Z
C50	283-0003-00			CAP.,FXD,CER DI:0.01UF,+80-20%,150V	72982	855-558Z5U-103Z
C53	281-0518-00			CAP.,FXD,CER DI:47PF,+/-9.4PF,500V	72982	301-000U2J0470M
C54	281-0523-00			CAP.,FXD,CER DI:100PF,+/-20PF,500V	72982	301-000U2M0101M
C55	281-0184-00			CAP.,VAR,PLSTC:2-18PF,500VDC	34553	2222-809-05003
C56	283-0633-00			CAP.,FXD,MICA D:77PF,1%,100V	00853	D151E770F0
C57[1]	285-0754-01			CAP.,FXD,PLSTC:995PF,3.5%,400V	80009	285-0754-01
C58[1]	285-0753-01			CAP,FXD,PLASTIC:.01UF,3%,100V	80009	285-0753-01
C59[1]	285-0895-00			CAP.,FXD,PLSTC:1UF,3%,25V	80009	285-0895-00
C60[1]	285-0891-00			CAP.,FXD,PLSTC:0.1UF,3%,100V	80009	285-0891-00
C61[1]	285-0784-01			CAP.,FXD,PLSTC:10UF,3.5%,25V	80009	285-0784-01
C88	290-0512-00			CAP.,FXD,ELCTLT:22UF,20%,15V	56289	196D226X0015KA1
C98	283-0111-00			CAP.,FXD,CER DI:0.1UF,20%,50V	72982	8121-N088Z5U104M
C100	290-0512-00			CAP.,FXD,ELCTLT:22UF,20%,15V	56289	196D226X0015KA1
C102	290-0527-00			CAP.,FXD,ELCTLT:15UF,20%,20V	90201	TDC156M020FL
C110	290-0527-00			CAP.,FXD,ELCTLT:15UF,20%,20V	90201	TDC156M020FL
C120	290-0512-00			CAP.,FXD,ELCTLT:22UF,20%,15V	56289	196D226X0015KA1
C122	290-0527-00			CAP.,FXD,ELCTLT:15UF,20%,20V	90201	TDC156M020FL
CR5	152-0141-02			SEMICOND DEVICE:SILICON,30V,150MA	07910	1N4152
CR6	152-0141-02			SEMICOND DEVICE:SILICON,30V,150MA	07910	1N4152
CR8	152-0141-02			SEMICOND DEVICE:SILICON,30V,150MA	07910	1N4152
CR9	152-0141-02			SEMICOND DEVICE:SILICON,30V,150MA	07910	1N4152
CR21	152-0141-02			SEMICOND DEVICE:SILICON,30V,150MA	07910	1N4152
CR44	152-0141-02			SEMICOND DEVICE:SILICON,30V,150MA	07910	1N4152
CR71	152-0141-02			SEMICOND DEVICE:SILICON,30V,150MA	07910	1N4152
CR72	152-0141-02			SEMICOND DEVICE:SILICON,30V,150MA	07910	1N4152
CR80	152-0141-02			SEMICOND DEVICE:SILICON,30V,150MA	07910	1N4152
CR89	152-0141-02			SEMICOND DEVICE:SILICON,30V,150MA	07910	1N4152
DS56	150-0107-00	B010100	B041819	LAMP,INCAND:12V,0.04A,T-1	87034	227AS25
DS56	150-0109-00	B041820		LAMP,INCAND:18V,26MA	71744	CM7220
J40	131-0955-00			CONNECTOR,RCPT,:BNC,FEMALE,W/HARDWARE	05091	31-279
J45	131-0955-00			CONNECTOR,RCPT,:BNC,FEMALE,W/HARDWARE	05091	31-279
J90	131-0955-00			CONNECTOR,RCPT,:BNC,FEMALE,W/HARDWARE	05091	31-279
L85	120-0407-00			XFMR,TOROID:5 TURNS SINGLE	80009	120-0407-00
Q15	151-0219-00			TRANSISTOR:SILICON,PNP	80009	151-0219-00
Q44	151-0188-00			TRANSISTOR:SILICON,PNP	80009	151-0188-00
Q46	151-0188-00			TRANSISTOR:SILICON,PNP	80009	151-0188-00
Q70A,B	151-0232-00			TRANSISTOR:SILICON,NPN,DUAL	80009	151-0232-00
Q78	151-0188-00			TRANSISTOR:SILICON,PNP	80009	151-0188-00

[1]Available as a matched set; part number 295-0161-00. The letter suffix and the tolerance should be the same for all of the timing capacitors in the assembly.

Ckt No.	Tektronix Part No.	Serial/Model No. Eff	Dscont	Name & Description	Mfr Code	Mfr Part Number
Q82	151-0103-00			TRANSISTOR:SILICON,NPN	80009	151-0103-00
Q90	151-0188-00			TRANSISTOR:SILICON,PNP	80009	151-0188-00
Q92	151-0188-00			TRANSISTOR:SILICON,PNP	80009	151-0188-00
Q100	151-0302-00			TRANSISTOR:SILICON,NPN	04713	2N2222A
Q120	151-0301-00			TRANSISTOR:SILICON,PNP	04713	2N2907A
R5	315-0103-00			RES.,FXD,CMPSN:10K OHM,5%,0.25W	01121	CB1035
R8	315-0103-00			RES.,FXD,CMPSN:10K OHM,5%,0.25W	01121	CB1035
R10	315-0104-00			RES.,FXD,CMPSN:100K OHM,5%,0.25W	01121	CB1045
R12	315-0473-00			RES.,FXD,CMPSN:47K OHM,5%,0.25W	01121	CB4735
R13	315-0432-00			RES.,FXD,CMPSN:4.3K OHM,5%,0.25W	01121	CB4325
R15	315-0103-00			RES.,FXD,CMPSN:10K OHM,5%,0.25W	01121	CB1035
R18	315-0152-00			RES.,FXD,CMPSN:1.5K OHM,5%,0.25W	01121	CB1525
R19	315-0201-00			RES.,FXD,CMPSN:200 OHM,5%,0.25W	01121	CB2015
R21	315-0103-00			RES.,FXD,CMPSN:10K OHM,5%,0.25W	01121	CB1035
R23	315-0473-00	XB040000		RES.,FXD,CMPSN:47K OHM,5%,0.25W	01121	CB4735
R25	315-0392-00			RES.,FXD,CMPSN:3.9K OHM,5%,0.25W	01121	CB3925
R27	311-1368-00			RES.,VAR,NONWIR:5K OHM,20%,1W	01121	73A1G040L502M
R30	315-0682-00			RES.,FXD,CMPSN:6.8K OHM,5%,0.25W	01121	CB6825
R32	315-0682-00			RES.,FXD,CMPSN:6.8K OHM,5%,0.25W	01121	CB6825
R33	315-0682-00			RES.,FXD,CMPSN:6.8K OHM,5%,0.25W	01121	CB6825
R35	315-0223-00			RES.,FXD,CMPSN:22K OHM,5%,0.25W	01121	CB2235
R37	315-0303-00			RES.,FXD,CMPSN:30K OHM,5%,0.25W	01121	CB3035
R39	315-0104-00			RES.,FXD,CMPSN:100K OHM,5%,0.25W	01121	CB1045
R40	315-0682-00			RES.,FXD,CMPSN:6.8K OHM,5%,0.25W	01121	CB6825
R41	315-0105-00			RES.,FXD,CMPSN:1M OHM,5%,0.25W	01121	CB1055
R42	315-0621-00			RES.,FXD,CMPSN:620 OHM,5%,0.25W	01121	CB6215
R44	315-0512-00			RES.,FXD,CMPSN:5.1K OHM,5%,0.25W	01121	CB5125
R46	315-0471-00			RES.,FXD,CMPSN:470 OHM,5%,0.25W	01121	CB4715
R47	315-0161-00			RES.,FXD,CMPSN:160 OHM,5%,0.25W	01121	CB1615
R50	311-1370-00			RES.,VAR,NONWIR:2K OHM,30%,0.25W	71450	201-YA5556
R51	321-0262-00			RES.,FXD,FILM:5.23K OHM,1%,0.125W	91637	MFF1816G52300F
R52	321-0282-00			RES.,FXD,FILM:8.45K OHM,1%,0.125W	91637	MFF1816G84500F
R53	315-0682-00			RES.,FXD,CMPSN:6.8K OHM,5%,0.25W	01121	CB6825
R54	315-0101-00			RES.,FXD,CMPSN:100 OHM,5%,0.25W	01121	CB1015
R55	321-0406-02			RES.,FXD,FILM:165K OHM,0.5%,0.125W	91637	MFF1816D16502D
R56	311-1365-00	B010100	B010244	RES.,VAR,NONWIR:50K OHM,20%,1W	01121	11M164
R56	311-1470-00	B010245		RES.,VAR,NONWW:PNL,50K OHM,1W	01121	11M055
R57	303-0511-00	B010100	B041819	RES.,FXD,CMPSN:510 OHM,5%,1W	01121	GB5115
R57	303-0751-00	B041820		RES.,FXD,CMPSN:750 OHM,5%,1W	01121	GB7515
R59	321-0253-00			RES.,FXD,FILM:4.22K OHM,1%,0.125W	91637	MFF1816G42200F
R63	311-1226-00			RES.,VAR,NONWIR:2.5K OHM,20%,0.50W	32997	3386F-T04-252
R65	321-0126-00			RES.,FXD,FILM:200 OHM,1%,0.125W	91637	MFF1816G200R0F
R66	315-0153-00			RES.,FXD,CMPSN:15K OHM,5%,0.25W	01121	CB1535
R67	321-0193-00			RES.,FXD,FILM:1K OHM,1%,0.125W	91637	MFF1816G10000F
R69	321-0356-00			RES.,FXD,FILM:49.9K OHM,1%,0.125W	91637	MFF1816G49901F
R70	311-1363-00			RES.,VAR,NONWW:TRMR,50K OHM,0.25W	71450	201-YA5555
R72	315-0752-00			RES.,FXD,CMPSN:7.5K OHM,5%,0.25W	01121	CB7525
R74	321-0251-00			RES.,FXD,FILM:4.02K OHM,1%,0.125W	91637	MFF1816G40200F
R75	321-0193-00			RES.,FXD,FILM:1K OHM,1%,0.125W	91637	MFF1816G10000F
R76	315-0153-00			RES.,FXD,CMPSN:15K OHM,5%,0.25W	01121	CB1535
R78	315-0302-00			RES.,FXD,CMPSN:3K OHM,5%,0.25W	01121	CB3025
R79	315-0123-00			RES.,FXD,CMPSN:12K OHM,5%,0.25W	01121	CB1235
R81	315-0222-00			RES.,FXD,CMPSN:2.2K OHM,5%,0.25W	01121	CB2225

Ckt No.	Tektronix Part No.	Serial/Model No. Eff	Dscont	Name & Description	Mfr Code	Mfr Part Number
R83	315-0101-00			RES.,FXD,CMPSN:100 OHM,5%,0.25W	01121	CB1015
R84	307-0103-00			RES.,FXD,CMPSN:2.7 OHM,5%,0.25W	01121	CB27G5
R85	311-1369-00			RES.,VAR,NONWW:PNL,1K OHM,1W	01121	12M887
R86	321-0260-00			RES.,FXD,FILM:4.99K OHM,1%,0.125W	91637	MFF1816G49900F
R88	315-0100-00			RES.,FXD,CMPSN:10 OHM,5%,0.25W	01121	CB1005
R89	315-0202-00			RES.,FXD,CMPSN:2K OHM,5%,0.25W	01121	CB2025
R90	311-1363-00			RES.,VAR,NONWW:TRMR,50K OHM,0.25W	71450	201-YA5555
R92	321-0452-00			RES.,FXD,FILM:499K OHM,1%,0.125W	91637	MFF1816G49902F
R94	321-0261-00			RES.,FXD,FILM:5.11K OHM,1%,0.125W	91637	MFF1816G51100F
R95	315-0103-00			RES.,FXD,CMPSN:10K OHM,5%,0.25W	01121	CB1035
R97	315-0202-00			RES.,FXD,CMPSN:2K OHM,5%,0.25W	01121	CB2025
R98	303-0221-00			RES.,FXD,CMPSN:220 OHM,5%,1W	01121	GB2215
R100	315-0302-00			RES.,FXD,CMPSN:3K OHM,5%,0.25W	01121	CB3025
R102	307-0105-00			RES.,FXD,CMPSN:3.9 OHM,5%,0.25W	01121	CB39G5
R120	315-0242-00			RES.,FXD,CMPSN:2.4K OHM,5%,0.25W	01121	CB2425
R122	307-0105-00			RES.,FXD,CMPSN:3.9 OHM,5%,0.25W	01121	CB39G5
R124	321-0268-00			RES.,FXD,FILM:6.04K OHM,1%,0.125W	91637	MFF1816G60400F
R126	321-0285-00			RES.,FXD,FILM:9.09K OHM,1%,0.125W	91637	MFF1816G90900F
S10A, S10B, S10C, S10D, S10E	260-1437-00			SWITCH,PUSH:5 STA,NON-SHORT	80009	260-1437-00
S50A, S50B, S50C, S50D, S50E, S50F	260-1438-00			SWITCH,PUSH:6 STA,INTERLOCK,NON-SHORT	80009	260-1438-00
S90	260-1208-00			SWITCH,PUSH:DPDT	80009	260-1208-00
U30	155-0056-00			MICROCIRCUIT,DI:SWEEP CONTROL	80009	155-0056-00
U50	155-0042-03			MICROCIRCUIT,DI:MILLER INTEGRATOR	80009	155-0042-03
U100	156-0067-00			MICROCIRCUIT,LI:OPERATIONAL AMPLIFIER	80009	156-0067-00
U110	156-0277-00			MICROCIRCUIT,LI:VOLTAGE REGULATOR	27014	LM340T-5
U120	156-0067-00			MICROCIRCUIT,LI:OPERATIONAL AMPLIFIER	80009	156-0067-00
VR100	152-0243-00			SEMICOND DEVICE:ZENER,0.4W,15V,5%	80009	152-0243-00
VR120	152-0212-00			SEMICOND DEVICE:ZENER,0.5W,9V,5%	80009	152-0212-00

DIAGRAMS

Symbols and Reference Designators

Electrical components shown on the diagrams are in the following units unless noted otherwise:

Capacitors = Values one or greater are in picofarads (pF).
Values less than one are in microfarads (μF).
Resistors = Ohms (Ω).

Symbols used on the diagrams are based on ANSI Standard Y32.2-1970.

Logic symbology is based on ANSI Y32.14-1973 in terms of positive logic. Logic symbols depict the logic function performed and may differ from the manufacturer's data.

The following prefix letters are used as reference designators to identify components or assemblies on the diagrams.

A	Assembly, separable or repairable (circuit board, etc.)
AT	Attenuator, fixed or variable
B	Motor
BT	Battery
C	Capacitor, fixed or variable
CB	Circuit breaker
CR	Diode, signal or rectifier
DL	Delay line
DS	Indicating device (lamp)
E	Spark Gap
F	Fuse
FL	Filter
H	Heat dissipating device (heat sink, heat radiator, etc.)
HR	Heater
HY	Hybrid circuit
J	Connector, stationary portion
K	Relay
L	Inductor, fixed or variable
LR	Inductor/resistor combination
M	Meter
P	Connector, movable portion
Q	Transistor or silicon-controlled rectifier
R	Resistor, fixed or variable
RT	Thermistor
S	Switch
T	Transformer
TC	Thermocouple
TP	Test point
U	Assembly, inseparable or non-repairable (integrated circuit, etc.)
V	Electron tube
VR	Voltage regulator (zener diode, etc.)
Y	Crystal
Z	Phase shifter

The following special symbols are used on the diagrams:

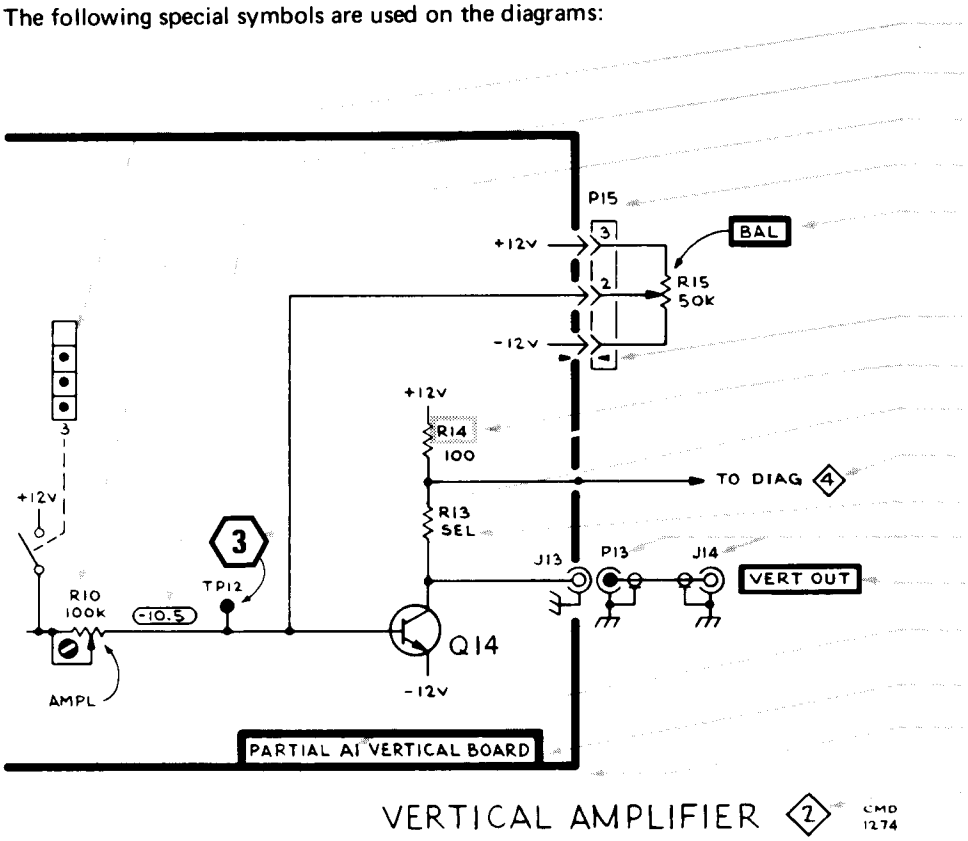

VERTICAL AMPLIFIER 2 CMD 1274

Cam Switch Closure Chart

Internal Screwdriver Adjustment

Test Voltage

Plug to E.C. Board

Panel Adjustment

Plug Index

Modified Component—See Parts List

Refer to Waveform

Refer to Diagram Number

SEL Value Selected at Factory

Coaxial Connector

Panel Connector

Assembly Number

Board Name

Etched Circuit Board Outlined in Black

Schematic Name and Number

PARTS LOCATION GRID

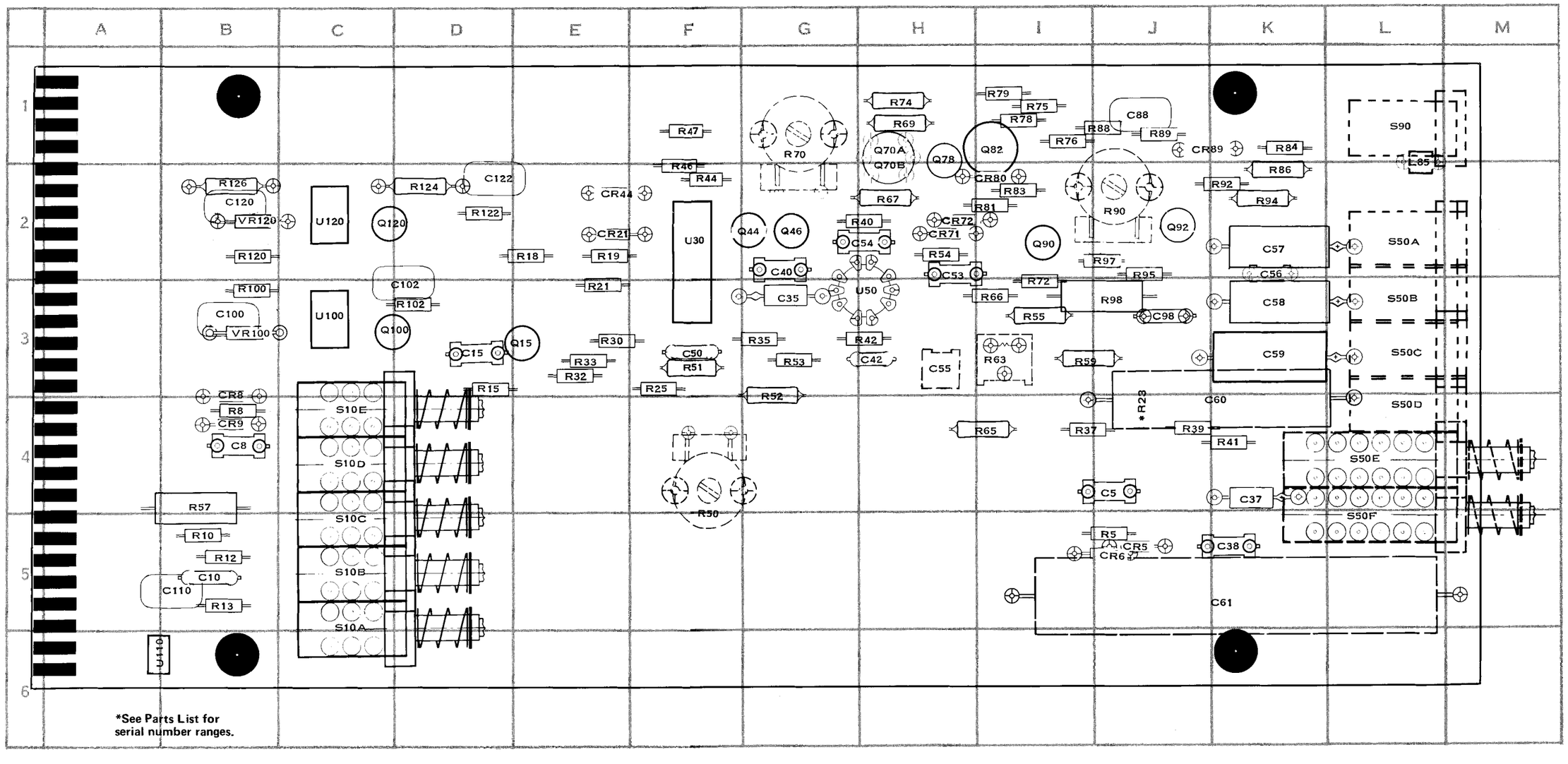

*See Parts List for serial number ranges.

NOTE: COMPONENTS SHOWN WITH DASHED LINES ARE LOCATED ON BACK SIDE OF BOARD.

VOLTAGE AND WAVEFORM CONDITIONS

The voltages and waveforms shown on diagram 1 were taken with no input signal and the RG 501 front panel controls set as follows:

Voltages		***Waveforms**	
RAMP AMPLITUDE	5 V	RAMP AMPLITUDE	5V
DURATION MULTIPLIER	1	DURATION MULTIPLIER	1
POLARITY	+	POLARITY	+
RAMP DURATION	10 μs	RAMP DURATION	10 μs
TRIGGERING: NORM, +SLOPE, EXT		TRIGGERING: AUTO, +SLOPE, INT	

***gnd reference: center horizontal graticule line**

1

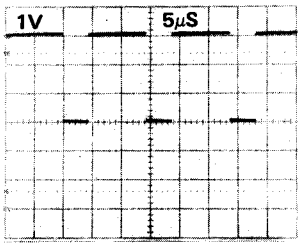

2

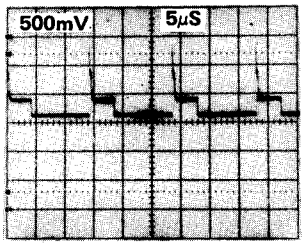

3

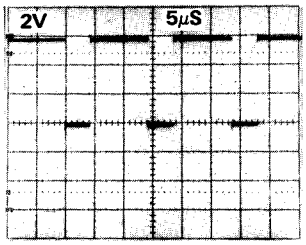

4

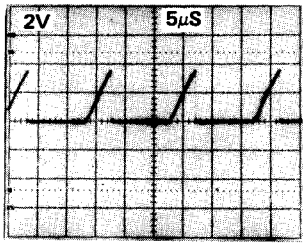

5

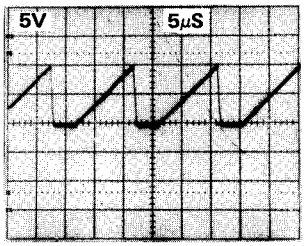

6

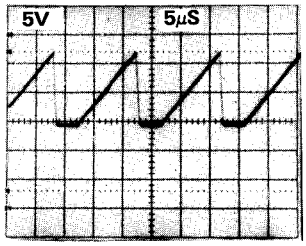

7

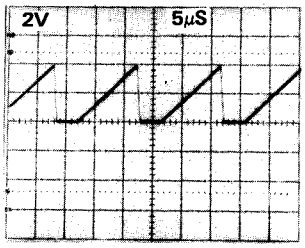

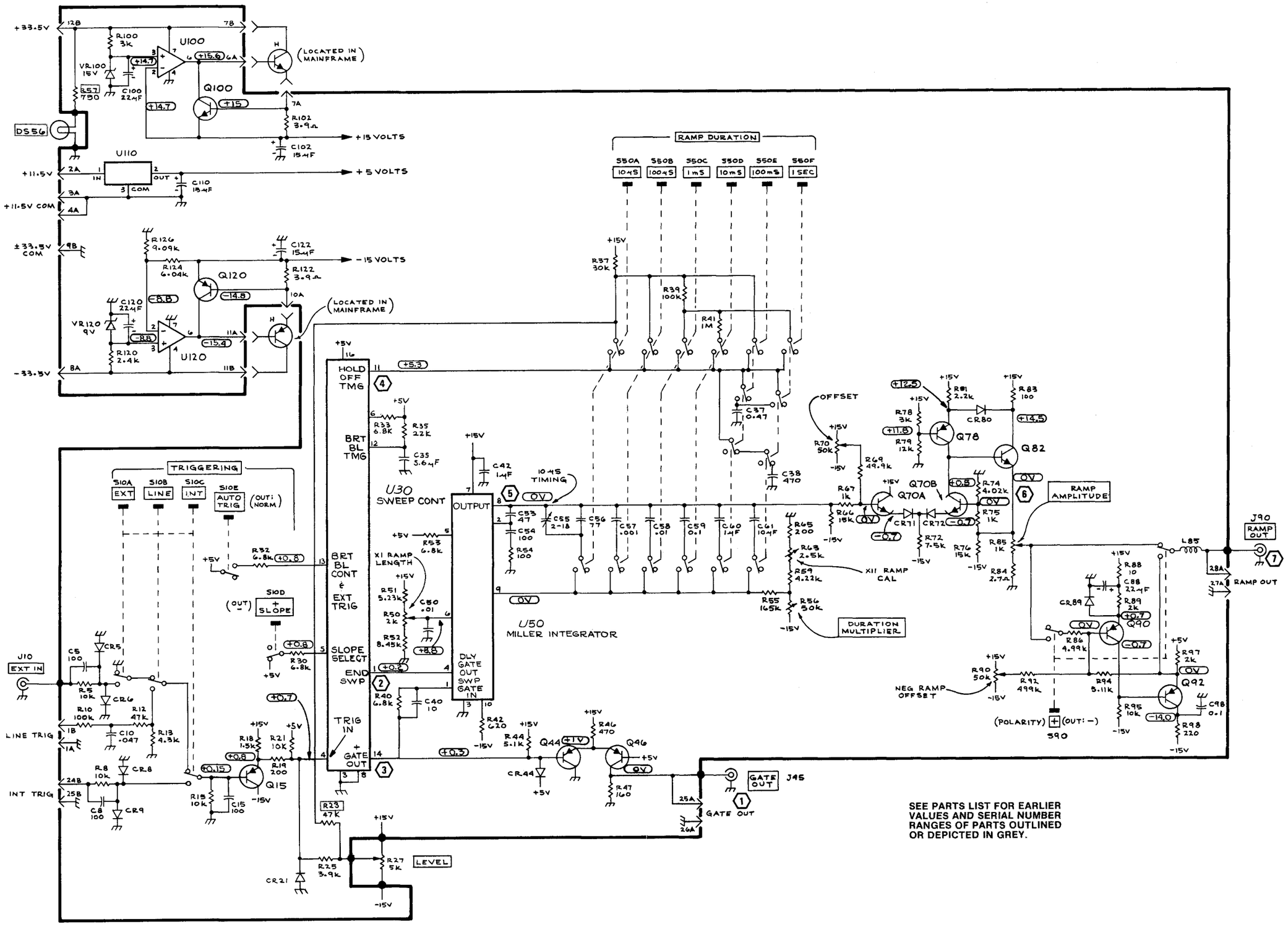

SEE PARTS LIST FOR EARLIER VALUES AND SERIAL NUMBER RANGES OF PARTS OUTLINED OR DEPICTED IN GREY.

REPLACEABLE MECHANICAL PARTS

PARTS ORDERING INFORMATION

Replacement parts are available from or through your local Tektronix, Inc. Field Office or representative.

Changes to Tektronix instruments are sometimes made to accommodate improved components as they become available, and to give you the benefit of the latest circuit improvements developed in our engineering department. It is therefore important, when ordering parts, to include the following information in your order: Part number, instrument type or number, serial number, and modification number if applicable.

If a part you have ordered has been replaced with a new or improved part, your local Tektronix, Inc. Field Office or representative will contact you concerning any change in part number.

Change information, if any, is located at the rear of this manual.

SPECIAL NOTES AND SYMBOLS

X000	Part first added at this serial number
00X	Part removed after this serial number

FIGURE AND INDEX NUMBERS

Items in this section are referenced by figure and index numbers to the illustrations.

INDENTATION SYSTEM

This mechanical parts list is indented to indicate item relationships. Following is an example of the indentation system used in the description column.

1 2 3 4 5 Name & Description

Assembly and/or Component
Attaching parts for Assembly and/or Component
- - - * - - -
Detail Part of Assembly and/or Component
Attaching parts for Detail Part
- - - * - - -
Parts of Detail Part
Attaching parts for Parts of Detail Part
- - - * - - -

Attaching Parts always appear in the same indentation as the item it mounts, while the detail parts are indented to the right. Indented items are part of, and included with, the next higher indentation. The separation symbol - - - * - - - indicates the end of attaching parts.

Attaching parts must be purchased separately, unless otherwise specified.

ITEM NAME

In the Parts List, an Item Name is separated from the description by a colon (:). Because of space limitations, an Item Name may sometimes appear as incomplete. For further Item Name identification, the U.S. Federal Cataloging Handbook H6-1 can be utilized where possible.

ABBREVIATIONS

"	INCH
#	NUMBER SIZE
ACTR	ACTUATOR
ADPTR	ADAPTER
ALIGN	ALIGNMENT
AL	ALUMINUM
ASSEM	ASSEMBLED
ASSY	ASSEMBLY
ATTEN	ATTENUATOR
AWG	AMERICAN WIRE GAGE
BD	BOARD
BRKT	BRACKET
BRS	BRASS
BRZ	BRONZE
BSHG	BUSHING
CAB	CABINET
CAP	CAPACITOR
CER	CERAMIC
CHAS	CHASSIS
CKT	CIRCUIT
COMP	COMPOSITION
CONN	CONNECTOR
COV	COVER
CPLG	COUPLING
CRT	CATHODE RAY TUBE
DEG	DEGREE
DWR	DRAWER
ELCTRN	ELECTRON
ELEC	ELECTRICAL
ELCTLT	ELECTROLYTIC
ELEM	ELEMENT
EPL	ELECTRICAL PARTS LIST
EQPT	EQUIPMENT
EXT	EXTERNAL
FIL	FILLISTER HEAD
FLEX	FLEXIBLE
FLH	FLAT HEAD
FLTR	FILTER
FR	FRAME or FRONT
FSTNR	FASTENER
FT	FOOT
FXD	FIXED
GSKT	GASKET
HDL	HANDLE
HEX	HEXAGON
HEX HD	HEXAGONAL HEAD
HEX SOC	HEXAGONAL SOCKET
HLCPS	HELICAL COMPRESSION
HLEXT	HELICAL EXTENSION
HV	HIGH VOLTAGE
IC	INTEGRATED CIRCUIT
ID	INSIDE DIAMETER
IDENT	IDENTIFICATION
IMPLR	IMPELLER
IN	INCH
INCAND	INCANDESCENT
INSUL	INSULATOR
INTL	INTERNAL
LPHLDR	LAMPHOLDER
MACH	MACHINE
MECH	MECHANICAL
MTG	MOUNTING
NIP	NIPPLE
NON WIRE	NOT WIRE WOUND
OBD	ORDER BY DESCRIPTION
OD	OUTSIDE DIAMETER
OVH	OVAL HEAD
PH BRZ	PHOSPHOR BRONZE
PL	PLAIN or PLATE
PLSTC	PLASTIC
PN	PART NUMBER
PNH	PAN HEAD
PWR	POWER
RCPT	RECEPTACLE
RES	RESISTOR
RGD	RIGID
RLF	RELIEF
RTNR	RETAINER
SCH	SOCKET HEAD
SCOPE	OSCILLOSCOPE
SCR	SCREW
SE	SINGLE END
SECT	SECTION
SEMICOND	SEMICONDUCTOR
SHLD	SHIELD
SHLDR	SHOULDERED
SKT	SOCKET
SL	SLIDE
SLFLKG	SELF-LOCKING
SLVG	SLEEVING
SPR	SPRING
SQ	SQUARE
SST	STAINLESS STEEL
STL	STEEL
SW	SWITCH
T	TUBE
TERM	TERMINAL
THD	THREAD
THK	THICK
TNSN	TENSION
TPG	TAPPING
TRH	TRUSS HEAD
V	VOLTAGE
VAR	VARIABLE
W/	WITH
WSHR	WASHER
XFMR	TRANSFORMER
XSTR	TRANSISTOR

CROSS INDEX—MFR. CODE NUMBER TO MANUFACTURER

Mfr. Code	Manufacturer	Address	City, State, Zip
05091	TRI-ORDINATE CORPORATION	343 SNYDER AVENUE	BERKELEY HEIGHTS, NJ 07922
08261	SPECTRA-STRIP CORP.	7100 LAMPSON AVE.	GARDEN GROVE, CA 92642
22526	BERG ELECTRONICS, INC.	YOUK EXPRESSWAY	NEW CUMBERLAND, PA 17070
45722	USM CORP., PARKER-KALON FASTENER DIV.		CAMPBELLSVILLE, KY 42718
73743	FISCHER SPECIAL MFG. CO.	446 MORGAN ST.	CINCINNATI, OH 45206
74445	HOLO-KROME CO.	31 BROOK ST. WEST	HARTFORD, CT 06110
79807	WROUGHT WASHER MFG. CO.	2100 S. O BAY ST.	MILWAUKEE, WI 53207
80009	TEKTRONIX, INC.	P O BOX 500	BEAVERTON, OR 97077
83385	CENTRAL SCREW CO.	2530 CRESCENT DR.	BROADVIEW, IL 60153
93907	CAMCAR SCREW AND MFG. CO.	600 18TH AVE.	ROCKFORD, IL 61101

Fig. & Index No.	Tektronix Part No.	Serial/Model No. Eff	Dscont	Qty	1 2 3 4 5 Name & Description	Mfr Code	Mfr Part Number
1-1	337-1399-00	B010100	B029999	2	SHLD,ELECTRICAL:SIDE	80009	337-1399-00
	337-1399-00	B030000		1	SHLD,ELECTRICAL:SIDE	80009	337-1399-00
	337-1399-02	B030000		1	SHLD,ELECTRICAL:SIDE WITH INSULATOR	80009	337-1399-02
-2	366-1428-00			1	KNOB:	80009	366-1428-00
	213-0153-00			1	. SETSCREW:5-40 X 0.125 INCH,HEX SOC STL	74445	OBD
-3	366-0494-00			1	KNOB:GRAY	80009	366-0494-00
	213-0153-00			1	. SETSCREW:5-40 X 0.125 INCH,HEX SOC STL	74445	OBD
-4	366-0494-00			1	KNOB:GRAY	80009	366-0494-00
	213-0153-00			1	. SETSCREW:5-40 X 0.125 INCH,HEX SOC STL	74445	OBD
-5	366-1257-26			1	PUSH BUTTON:GRAY--AUTO TRIG	80009	366-1257-26
-6	366-1257-28			1	PUSH BUTTON:GRAY--+SLOPE	80009	366-1257-28
-7	366-1402-27			1	PUSH BUTTON:GRAY--INT	80009	366-1402-27
-8	366-1257-23			1	PUSH BUTTON:LINE	80009	366-1257-23
-9	366-1257-24			1	PUSH BUTTON:GRAY--EXT	80009	366-1257-24
-10	366-1402-26			1	PUSH BUTTON:GRAY--+	80009	366-1402-26
-11	366-1257-60			1	PUSH BUTTON:GRAY--10US	80009	366-1257-60
-12	366-1257-50			1	PUSH BUTTON:GRAY--100US	80009	366-1257-50
-13	366-1257-49			1	PUSH BUTTON:GRAY--1MS	80009	366-1257-49
-14	366-1257-48			1	PUSH BUTTON:10 MS	80009	366-1257-48
-15	366-1257-47			1	PUSH BUTTON:100 MS	80009	366-1257-47
-16	366-1402-28			1	PUSH BUTTON:GRAY,1 SEC	80009	366-1402-28
-17	426-0681-00			12	FR,PUSH BUTTON:GRAY PLASTIC	80009	426-0681-00
-18	366-1422-00	B010100	B019999	1	KNOB:LATCH	80009	366-1422-00
	366-1422-01	B020000	B042369	1	KNOB:LATCH	80009	366-1422-01
	366-1690-00	B042370		1	KNOB,LATCH:	80009	366-1690-00
	214-1840-00	XB020000	B042369	1	PIN,KNOB SECRG:0.094 OD X 0.120 INCH LONG	80009	214-1840-00
-19	131-0955-00			1	CONNECTOR,RCPT,:BNC,FEMALE,W/HARDWARE	05091	31-279
-20	131-0955-00			2	CONNECTOR,RCPT,:BNC,FEMALE,W/HARDWARE	05091	31-279
					(ATTACHING PARTS FOR EACH)		
-21	210-0255-00			1	TERMINAL,LUG:0.391" ID INT TOOTH	80009	210-0255-00
					- - - * - - -		
-22	----- -----			3	RESISTOR,VAR:(SEE R27,R56,R85 EPL)		
					(ATTACHING PARTS FOR EACH)		
-23	210-0583-00			1	NUT,PLAIN,HEX.:0.25-32 X 0.312 INCH,BRS	73743	2X20224-402
-24	210-0940-00			1	WASHER,FLAT:0.25 ID X 0.375 INCH OD,STL	79807	OBD
					- - - * - - -		
-25	333-1641-00			1	PANEL,FRONT:	80009	333-1641-00
-26	384-1060-00			5	EXTENSION SHAFT:7.831 INCH LONG	80009	384-1060-00
-27	200-0935-00			1	BASE,LAMPHOLDER:0.29 OD X 0.19 CASE	80009	200-0935-00
-28	378-0635-00			1	LENS,LIGHT:WHITE	80009	378-0635-00
-29	352-0157-00			1	LAMPHOLDER:WHITE PLASTIC	80009	352-0157-00
-30	214-1513-00	B010100	B019999	1	LCH,PL-IN RTNG:PLASTIC	80009	214-1513-00
	214-1513-01	B020000	B042369	1	LCH,PLUG-IN RET:	80009	214-1513-01
	105-0719-00	B042370		1	LATCH,RETAINING:PLUG-IN	80009	105-0719-00
					(ATTACHING PARTS)		
-31	213-0254-00			1	SCR,TPG,THD CTG:2-32 X 0.250,100 DEG,FLH	45722	OBD
					- - - * - - -		
	105-0718-00	B042370		1	RELEASE,LATCH:	80009	105-0718-00
-32	386-2345-00			1	SPRT,REEDSW:	80009	386-2345-00
					(ATTACHING PARTS)		
-33	213-0229-00			4	SCR,TPG,THD FOR:6-20 X0.375"100 DEG,FLH STL	93907	OBD
					- - - * - - -		
-34	337-1690-00			1	SHIELD,ELEC:REAR SUBPANEL	80009	337-1690-00
-35	----- -----			1	CKT BOARD ASSY:MAIN(SEE A1 EPL)		
-36	136-0252-04			62	. SOCKET,PIN TERM:0.188 INCH LONG	22526	75060
-37	260-1437-00			1	. SWITCH,PUSH:5-STA,NON-SHORT	80009	260-1437-00
-38	260-1208-00			1	. SWITCH,PUSH:DPDT	80009	260-1208-00
-39	260-1438-00			1	. SWITCH,PUSH:6 STA,INTERLOCK,NON-SHORT	80009	260-1438-00
-40	361-0384-00			16	. SPACER,PB SW:0.133 INCH LONG	80009	361-0384-00
					(ATTACHING PARTS FOR CKT BD)		
-41	213-0146-00			4	SCR,TPG,THD FOR:6-20 X 0.313 INCH,PNH STL	83385	OBD
					- - - * - - -		

Fig. & Index No.	Tektronix Part No.	Serial/Model No. Eff	Dscont	Qty	1 2 3 4 5 Name & Description	Mfr Code	Mfr Part Number
1-42	175-0825-00			FT	WIRE,ELECTRICAL:2 WIRE RIBBON,2.75 INCHES L	08261	OBD
-43	175-0826-00			FT	WIRE,ELECTRICAL:3 WIRE RIBBON,6 INCHES L	08261	OBD
-44	426-0724-00			1	FR SECT,PLUG-IN:BOTTOM	80009	426-0724-00
	386-3657-00	XB042370		2	SUPPORT,PLUG-IN:	80009	386-3657-00
	210-1270-00	XB042370		2	WASHER,FLAT:0.141 ID X 0.40 THK,AL,0.219 OD	80009	210-1270-00
-45	426-0725-00			1	FR SECT,PLUG-IN:TOP	80009	426-0725-00

FIG. 1 EXPLODED

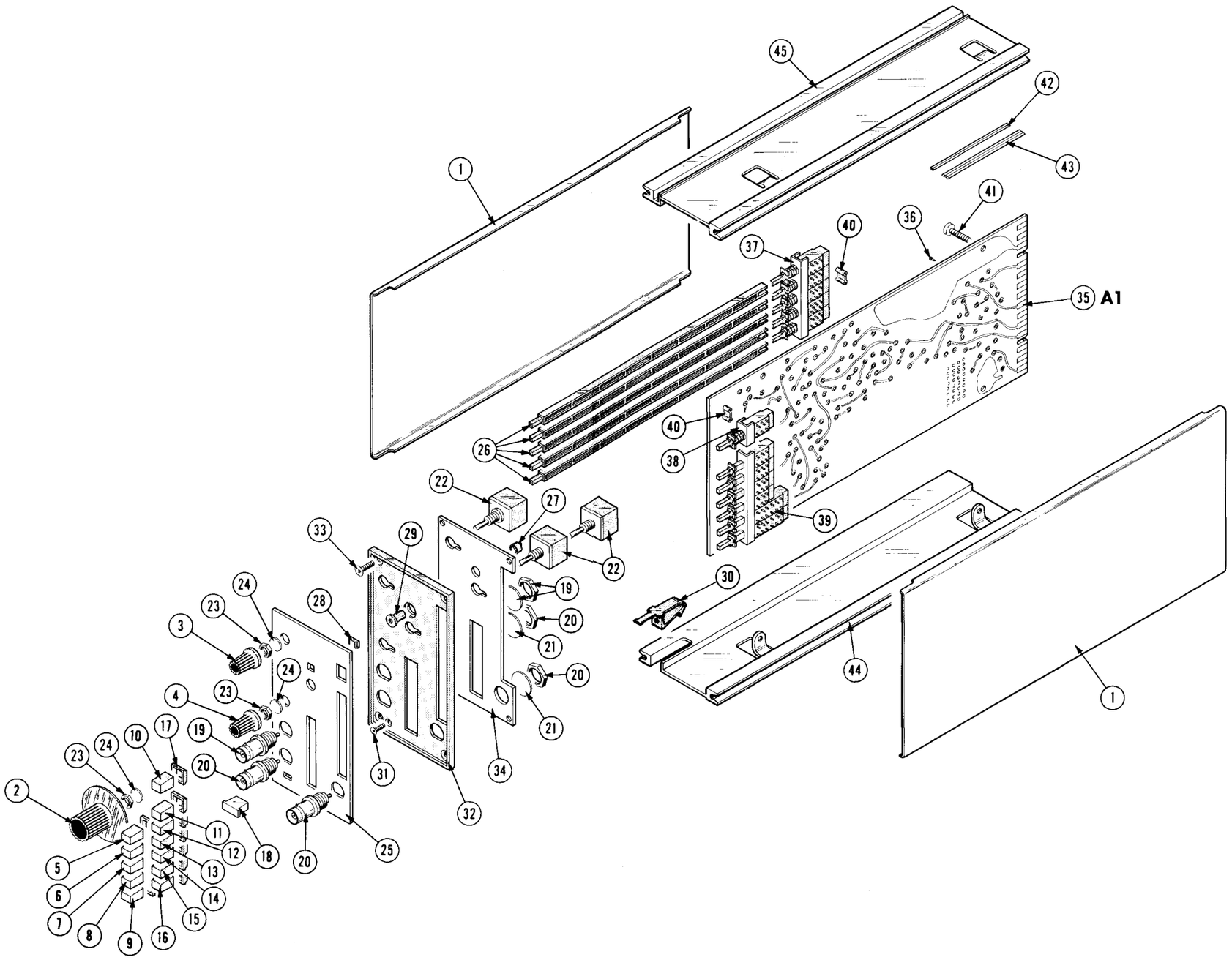

STANDARD ACCESSORIES

Index No.	Tektronix Part No.	Serial/Model No. Eff	Dscont	Qty	1 2 3 4 5	Name & Description	Mfr Code	Mfr Part Number
	070-1352-01			1		MANUAL:INSTRUCTION	80009	070-1352-01

MANUAL CHANGE INFORMATION

At Tektronix, we continually strive to keep up with latest electronic developments by adding circuit and component improvements to our instruments as soon as they are developed and tested.

Sometimes, due to printing and shipping requirements, we can't get these changes immediately into printed manuals. Hence, your manual may contain new change information on following pages.

A single change may affect several sections. Since the change information sheets are carried in the manual until all changes are permanently entered, some duplication may occur. If no such change pages appear following this page, your manual is correct as printed.

SERVICE NOTE

Because of the universal parts procurement problem, some electrical parts in your instrument may be different from those described in the Replaceable Electrical Parts List. The parts used will in no way alter or compromise the performance or reliability of this instrument. They are installed when necessary to ensure prompt delivery to the customer. Order replacement parts from the Replaceable Electrical Parts List.

CALIBRATION TEST EQUIPMENT REPLACEMENT

Calibration Test Equipment Chart

This chart compares TM 500 product performance to that of older Tektronix equipment. Only those characteristics where significant specification differences occur, are listed. In some cases the new instrument may not be a total functional replacement. Additional support instrumentation may be needed or a change in calibration procedure may be necessary.

Comparison of Main Characteristics

DM 501 replaces 7D13		
PG 501 replaces 107	PG 501 - Risetime less than 3.5 ns into 50 Ω.	107 - Risetime less than 3.0 ns into 50 Ω.
108	PG 501 - 5 V output pulse; 3.5 ns Risetime.	108 - 10 V output pulse; 1 ns Risetime.
111	PG 501 - Risetime less than 3.5 ns; 8 ns Pretrigger pulse delay.	111 - Risetime 0.5 ns; 30 to 250 ns Pretrigger Pulse delay.
114	PG 501 - ±5 V output.	114 - ±10 V output. Short proof output.
115	PG 501 - Does not have Paired, Burst, Gated, or Delayed pulse mode; ±5 V dc Offset. Has ±5 V output.	115 - Paired, Burst, Gated, and Delayed pulse mode; ±10 V output. Short-proof output.
PG 502 replaces 107		
108	PG 502 - 5 V output	108 - 10 V output.
111	PG 502 - Risetime less than 1 ns; 10 ns Pretrigger pulse delay.	111 - Risetime 0.5 ns; 30 to 250 ns Pretrigger pulse delay.
114	PG 502 - ±5 V output	114 - ±10 V output. Short proof output.
115	PG 502 - Does not have Paired, Burst, Gated, Delayed & Undelayed pulse mode; Has ±5 V output.	115 - Paired, Burst, Gated, Delayed & Undelayed pulse mode; ±10 V output. Short-proof output.
2101	PG 502 - Does not have Paired or Delayed pulse. Has ±5 V output.	2101 - Paired and Delayed pulse; 10 V output.
PG 506 replaces 106	PG 506 - Positive-going trigger output signal at least 1 V; High Amplitude output, 60 V.	106 - Positive and Negative-going trigger output signal, 50 ns and 1 V; High Amplitude output, 100 V.
067-0502-01	PG 506 - Does not have chopped feature.	0502-01 - Comparator output can be alternately chopped to a reference voltage.
SG 503 replaces 190, 190A, 190B	SG 503 - Amplitude range 5 mV to 5.5 V p-p.	190B - Amplitude range 40 mV to 10 V p-p.
191	SG 503 - Frequency range 250 kHz to 250 MHz.	191 - Frequency range 350 kHz to 100 MHz.
067-0532-01	SG 503 - Frequency range 250 kHz to 250 MHz.	0532-01 - Frequency range 65 MHz to 500 MHz.
TG 501 replaces 180, 180A	TG 501 - Marker outputs, 5 sec to 1 ns. Sinewave available at 5, 2, and 1 ns. Trigger output - slaved to marker output from 5 sec through 100 ns. One time-mark can be generated at a time.	180A - Marker outputs, 5 sec to 1 μs. Sinewave available at 20, 10, and 2 ns. Trigger pulses 1, 10, 100 Hz; 1, 10, and 100 kHz. Multiple time-marks can be generated simultaneously.
181	TG 501 - Marker outputs, 5 sec to 1 ns. Sinewave available at 5, 2, and 1 ns.	181 - Marker outputs, 1, 10, 100, 1000, and 10,000 μs, plus 10 ns sinewave.
184	TG 501 - Marker outputs, 5 sec to 1 ns. Sinewave available at 5, 2, and 1 ns. Trigger output - slaved to marker output from 5 sec through 100 ns. One time-mark can be generated at a time.	184 - Marker outputs, 5 sec to 2 ns. Sinewave available at 50, 20, 10, 5, and 2 ns. Separate trigger pulses of 1 and .1 sec; 10, 1, and .1 ms; 10 and 1 μs. Marker amplifier provides positive or negative time marks of 25 V min. Marker intervals of 1 and .1 sec; 10, 1, and .1 ms; 10 and 1 μs.
2901	TG 501 - Marker outputs, 5 sec to 1 ns. Sinewave available at 5, 2, and 1 ns. Trigger output - slaved to marker output from 5 sec through 100 ns. One time-mark can be generated at a time.	2901 - Marker outputs, 5 sec to 0.1 μs. Sinewave available to 50, 10, and 5 ns. Separate trigger pulses, from 5 sec to 0.1 μs. Multiple time-marks can be generated simultaneously.

NOTE: All TM 500 generator outputs are short-proof. All TM 500 plug-in instruments require TM 500-Series Power Module.