PRELIMINARY INSTRUCTION MANUAL

TYPE 6R1 DIGITAL UNIT

This is a preliminary instruction manual. It is not complete, and it may contain minor errors. We will send you the permanent instruction manual just as soon as it is ready. Be sure to complete and send in the attached card so that we can send the manual directly to the user of the instrument.

070-334

WARRANTY

All Tektronix instruments are warranted against defective materials and workmanship for one year. Tektronix transformers, manufactured in our own plant, are warranted for the life of the instrument.

Any questions with respect to the warranty mentioned above should be taken up with your Tektronix Field Engineer.

Tektronix repair and replacement-part service is geared directly to the field, therefore all requests for repairs and replacement parts should be directed to the Tektronix Field Office or Representative in your area. This procedure will assure you the fastest possible service. Please include the instrument Type and Serial number with all requests for parts or service.

Specifications and price change privileges reserved.

Tektronix, Inc.

S.W. Millikan Way ● P. O. Box 500 ● Beaverton, Oregon ● Phone MI 4-0161 ● Cables: Tektronix

Tektronix International A.G.

Terrassenweg 1A ● Zug, Switzerland ● PH. 042-49192 ● Cable: Tekintag, Zug Switzerland ● Telex 53.574

SECTION 1

CHARACTERISTICS

General Information

The Tektronix Type 6R1 Digital Unit presents, in digital form, measurements of time between percentages of pulse amplitudes, measurement of voltage, and the measurement of time difference between similar pulses when used with a dual-trace plug-in. The unit provides for automatic amplitude and time measurements with 4-digit readout plus unit of measure.

The Type 6R1 is designed for use in the Tektronix Type 567 Readout Oscilloscope. In conjunction with the "3" series of plug-ins, a wide variety of measurements can be made.

Operating Characteristics

Input

Internally from horizontal and vertical plug-in units.

Units of Measure

Volts: Readout in microvolts, millivolts, and volts.

Amperes: Readout in microamperes, milliamperes, and amperes.

Time: Readout in nanoseconds, microseconds, milliseconds, and seconds.

Numerical Range

Readout from .0001 to 9999

Accuracy of Readout

The number shown on the readout is accurate to within 3% ± 1 count.

Display Time

Variable from 2/3 second to 6 seconds.

Preset Limits

Front-panel controls set lower and upper limits. Front-panel lights show whether the number on the readout is between

the limits, or outside the limits.

Start and Stop Timing Switches

These switches consist of 7 fixed percentages (10% through 90%), which are accurate to within 1%, an uncalibrated manual control, and a Helidial which measures crt divisions from the 0% Zone and is accurate to within 1%.

Maximum Sweep Rate

Non-sampling type plug-ins.....10 μsec/div.

Sampling type plug-ins.....not limited.

External Programming

The Type 6R1 can be programmed externally from remote or automatic sequences.

Mechanical Specifications

Construction--Aluminum-alloy chassis.

Front panel--Photo-etched.

Net weight--10.2 pounds.

SECTION 2

OPERATING INSTRUCTIONS

General

The Type 6R1 Digital Unit is an accurate readout device for time and amplitude measurements. The Type 6R1 is designed for use with the Tektronix Type 567 Oscilloscope.

To get the most from your instrument, it is important to understand the function of each front-panel control. This section of the manual describes each control and its use in the operation of the instrument. As each control is described, note its location on the front panel of the Type 6R1.

For the purpose of this procedure, it is important that you understand the meaning of the terms "Intensified Zone" and "Slope". The following explanations define these terms as they apply to the Type 6R1.

The Type 6R1 produces three intensified zones on the display of the Type 567 Oscilloscope. Each zone appears as a brightened portion on the trace.

The first Intensified Zone is the 0% ZONE and appears at the start of the trace. This point is fixed on the display. The 0% Memory circuit takes a voltage sample at this point for use as a reference.

The second Intensified Zone is the START to STOP zone. The length and position of this zone depends on the setting of the START and STOP switches. When the MODE switch is in the TIME position, this zone shows the portion of the waveform being measured. The START to STOP Intensified Zone is extinguished when the MODE switch is set to a VOLTAGE position.

The third Intensified Zone is the 100% ZONE. The length of this zone is fixed and its position is variable with the A or B 100% ZONE SET control. The 100% Memory circuit takes a voltage sample at this point.

The 0% and 100% or the START to STOP zones can be turned off with the INTENSIFIED ZONES switches.

The term "Slope" refers to the rising or falling portion of a waveform. There are two kinds of slopes: a rising slope (positive going) and a falling slope (negative going). The SLOPE switches select the slope on which the measurement (time) starts and stops. The FIRST-SECOND switch selects either the first or second positive-going slope if the ± SLOPE switch is in the + position. If the ± SLOPE switch is in the - position, the FIRST-SECOND SLOPE switch will select either the first or second negative-going slope on the display. To use the SECOND SLOPE position you need at least 2 pulses or cycles since the second slope refers to slope on the second pulse or cycle, displayed on the oscilloscope (see Fig. 2-1).

FUNCTION OF CONTROLS

START BLOCK

The switches and controls in the start block are only used for time measurements. They are not used in voltage measurements.

FIRST-SECOND SLOPE	Selects the first or second slope on the display at which the measurement begins. To start on the second slope you need at least two cycles or pulses displayed on the crt. Always keep this switch in the FIRST position unless you are making a second slope measurement.
± SLOPE	Starts the measurement on the positive (+) or negative (-) slope of the waveform. To measure on a

positive-going slope, use the + position. For measurement on a negative slope, use the - position. This switch, in conjunction with a similar switch in the STOP portion of the instrument, gives a variety of combinations. Keep in mind that you must set the START to precede the STOP, otherwise, the display will be meaningless. Detailed use of this switch is covered later in this section.

TIMING START

MANUAL: In this position of the TIMING START switch, turn the red knob control on the front of the switch and manually set the start point of the measurement. (Be sure the SLOPE switches are in FIRST and + positions.) For example, if there were two pips on a waveform and you wanted to measure the time between them, first use this control to set the start of the intensified zone at the first pip, then use the MANUAL control on the TIMING STOP switch to set the end of the intensified zone at the second pip. The readout would give the time between pips.

A TRACE %: This precisely sets the percentage point at which the time

measurement will start on the A channel trace. For example, in a risetime measurement, set this switch to A TRACE 10% to start, and set the TIMING STOP switch to A TRACE 90%. The readout would give the risetime of the waveform.

B TRACE %: This starts the measurement on the B channel trace when dual-trace plug-ins are used. Normally when you start on B TRACE %, you also stop on B TRACE %. However, there are various combinations of A TRACE % and B TRACE % which will be described later in this section. Do not use B TRACE % positions with single-channel plug-in units.

TRACE A-B--START VOLTAGE: In this position of the TIMING START switch you use the Helidial just below the switch. Each major division on the Helidial is calibrated to represent 1 vertical division on the oscilloscope graticule, and will start the intensified zone at the point set by the Helidial. For example, with the Helidial set at 1, the time measurement will start 1 vertical division up from the 0% ZONE. The A-B refers to A or B channel and is set to the channel in use.

+ AND - Switch	Set to the polarity of the waveform being measured. Only used with the TIMING START Switch in A-B TRACE position.
Helidial	Calibrated to move the intensified zone 1 vertical graticule division up or down for each major division on the Helidial.
MODE Switch	TIME STOP (-) START: Position used for all TIME measurements. VOLTAGE A-B: Positions used for voltage measurements. The A and B refer to the appropriate channel of the vertical plug-in unit. With single-channel plug-in units, always use the A position. EXT. PROGRAM: Used when the instrument is set up to operate on external commands.
B VOLTAGE	Set to the polarity of the waveform being measured when the MODE switch is on B channel.
A VOLTAGE	Set to the polarity of the waveform being measured when the MODE switch is on A channel.
RESOLUTION Switch	AVERAGE OF TEN SWEEPS--LO - HI: Counts ten continuous sweeps, and moves the decimal point to indicate average. Right-hand digit (units)

blanked in LO, visible in HI.

ONE SWEEP---LO - UNSCALED: Measures one sweep of the displayed waveform. UNSCALED turns off unit of measure indicator (right side Nixie tube). Also, the count is direct and does not pass through the divide by 1, 2, 5 circuit. The number on the readout must be divided by 2 or 5 when the TIME/DIV. switch is in a 2 or 5 position.

DISPLAY TIME Control — Varies the time from one readout display to the next. During this period the readout holds the last number counted. No further count will be made until the display period ends.

CRT DISPLAY SWITCHES

A 100% ZONE SET — Sets the 100% zone (intensified) of the channel A waveform.

B 100% ZONE SET — Sets the 100% zone of the B channel waveform.

INTENSIFIED ZONES SWITCHES

0% AND 100% — Turns off the intensified portion of the waveform in the 0% and 100% zones.

START TO STOP — Turns off the intensified part of the waveform between start and stop.

STOP BLOCK

The switches and controls in the stop block are only used for time measurements. They are not used in voltage measurements.

FIRST-SECOND SLOPE — Selects the slope on the waveform at which the measurement stops. For example, the time of one cycle is found by setting the TIMING START switch to 50% FIRST SLOPE and setting the TIMING STOP switch to 50% SECOND SLOPE.

± SLOPE — Stops the measurement on the positive (+) or negative (-) slope of the waveform.

TIMING STOP

MANUAL: The red knob control on the front of the switch sets the STOP point on the displayed waveform. (Be sure the SLOPE switches are in FIRST and + positions.)

A TRACE %: Sets the percentage point on the A channel at which the measurement will stop.

B TRACE %: Sets the percentage point on the B channel at which the measurement will stop.

TRACE A-B--STOP VOLTAGE: In this position of the TIMING STOP switch, use the Helidial just below the switch. Each major division on the Helidial is calibrated to represent

	1 vertical division on the oscilloscope graticule, and will stop the intensified zone at the point set by the Helidial. For example, with the Helidial set at 3, the measurement will stop 3 divisions up or down from the 0% zone.
+ AND - Switch	Set to the polarity of the waveform being measured. Only used in the TRACE A-B position of the TIMING STOP switch.
Helidial	Calibrated to move the intensified zone 1 vertical graticule division for each major division of the Helidial.
LOWER LIMIT SET - READOUT LESS THAN	In go-no-go (accept or reject) type measurements, this switch sets the lower acceptable limit. If the number on the readout (Nixie tubes) is less than the number shown on this switch, the lower limit lamp will light. This information is also present at the external program plug for automatic reject mechanisms.
MID-ZONE	This light comes on when the number on the readout is within the limits set by the LOWER LIMIT SET and the UPPER LIMIT SET switches.
UPPER LIMIT SET - READOUT GREATER THAN	Sets the upper acceptable limit. If the number on the readout is

greater than the number shown on this switch, the upper limit lamp will light. This information is also present at the external program plug.

Digital Readout Indicator	The numbers (Nixie tubes) are read direct.
Unit of Measure	The right-hand Nixie tube gives the unit of measure in NS μS, MS, S, μA, MA, A, μV, MV, and V. This tube will be dark when the RESOLUTION switch is in the UNSCALED (MAX) position.
Decimal Point	The decimal point is automatically placed in the proper position by the TIME/DIV. switch when you measure time, or by the MV/DIV. switch when you measure voltage, on the accompanying plug-in units. No interpolation is necessary since the reading is always direct.

MEASUREMENTS WITH THE TYPE 6R1 DIGITAL UNIT

The following shows how to use the Type 6R1 Digital Unit. Four basic measurements are described. Once these basic techniques are mastered, you should be able to set up the instrument for other measurements.

In addition to the Type 567 Oscilloscope and two plug-in units (3S76 and 3T77), a signal source is required. A Tektronix Type 109, 110, or 111 Pulse Generator or a similar type generator, will serve this purpose.

PRELIMINARY SET UP

Set the front-panel controls as follows:

START	
SLOPE switches	First and +
TIMING START	A TRACE 10%
START VOLTAGE	+
Helidial	0
STOP	
SLOPE switches	FIRST and +
TIMING STOP	A TRACE 90%
STOP VOLTAGE	+
Helidial	0
MODE	TIME STOP (-) START
B VOLTAGE	Up
A VOLTAGE	Up
RESOLUTION	ONE SWEEP LO
DISPLAY TIME	Fully clockwise
CRT DISPLAY	
A 100% ZONE SET	Fully counterclockwise
B 100% ZONE SET	Fully counterclockwise
INTENSIFIED ZONES	
0% AND 100%	Up
START TO STOP	Up
LOWER LIMIT SET	0000
UPPER LIMIT SET	0000

Risetime Measurement

Risetime is the time it takes a waveform to rise from 10% of its amplitude to 90% of its amplitude. For example, assume you have a 100 millivolt peak-to-peak pulse. The pulse begins at zero and starts to rise. When it reaches 10 millivolts (10% point) the count starts (microseconds,

milliseconds, etc.). When the pulse amplitude reaches 90 millivolts (90% point), the unit stops. The readout indicates the risetime of the pulse.

To make a risetime measurement proceed as follows (any control not mentioned should remain in the position called out in the preliminary set up):

1. Apply the signal to the vertical amplifier plug-in A channel and display a single pulse on the crt. (Adjust the delay or trigger on the sweep plug-in so that the start of the pulse and the 0% zone coincide.)
2. Adjust the A 100% ZONE SET to place the 100% intensified zone at the peak of the waveform. Be sure the TIMING START switch is set to A TRACE 10% and the TIMING STOP switch to A TRACE 90%.
3. Turn the DISPLAY TIME control to mid-range. Each flicker of the readout represents a new count.
4. Read the risetime directly from the readout. This is the risetime of the pulse (see Fig. 2-2).

Notice the three intensified zones. First, on the left is the 0% zone. Next is the zone between 10% and 90% (start to stop zone) which was just measured. Last is the 100% zone. You can turn off the 0% and 100% zones by moving the INTENSIFIED ZONES 0% AND 100% switch to OFF. This switch is located in the center, bottom portion of the front panel. In the OFF position, the 0% and 100% zones will not be intensified.

Falltime Measurement

This is similar to the risetime measurement except that this is the time it takes the pulse to fall from 90% of its amplitude to 10% of its amplitude. In the case of a positive pulse, the measurement is on the first negative slope of the pulse. (For a negative pulse, use the first positive slope

for this measurement.) Return all controls to their preliminary position.

1. Adjust the A 100% ZONE SET control to set the intensified 100% zone at the peak amplitude of the displayed pulse.
2. Set the SLOPE switches in the START block to FIRST and -.
3. Set the TIMING START switch to A TRACE 90%.
4. Set the SLOPE switches in the STOP block to FIRST and -.
5. Set the TIMING STOP switch to A TRACE 10%.
6. Read the falltime on the readout.

This measurement shows one important thing. Starting on the left side of the crt and moving to the right, you must always meet the START intensified zone first. In the above measurement, moving from left to right on the trace, you encounter the 90% zone on the negative slope before you reach the 10% zone on the same slope (see Fig. 2-3).

Voltage Measurement

Using the same pulse as for the risetime measurement, the following steps show how to measure the peak amplitude (voltage) of this pulse.

1. Set the MODE switch to VOLTAGE A.
2. Set the A VOLTAGE switch up. (If the pulse were negative-going, this switch would be down.)
3. Turn the A 100% ZONE SET control until the intensified zone is on the peak of the pulse. (In cases where the pulse has overshoot, set the 100% zone on the flattened part of the pulse beyond the overshoot.)
4. Read the voltage shown on the readout. This is the peak amplitude of the pulse. (To include the overshoot, if any, move the 100% zone to the peak of the overshoot and note the reading. For amplitude of the overshoot only, subtract the first reading from this, the remainder will be the amplitude

of the overshoot.)

Thie measurement shows that voltage readings are taken between the 0% and 100% zones. Since you can move the 100% zone to any point, you can measure the amplitude at any point on a waveform. This may also suggest a way of checking the calibration of the vertical amplifier plug-in.

Frequency Measurement

This measurement counts the repetition rate or pulses per second. The counter starts at the 50% point on one pulse and stops at the 50% point on the following pulse. This gives the time of one pulse. The reciprocal of the time, in seconds, equals the frequency in pulses per second ($\frac{1}{T} = F$). Return all controls to their preliminary position.

To measure frequency, proceed as follows:

1. Adjust the horizontal plug-in to display two cycles or pulses.
2. Adjust the 100% ZONE SET control to place the 100% intensified zone on the peak of the first pulse.
3. Set the MODE switch to TIME STOP (-) START.
4. Set the TIMING START switch to A TRACE 50%.
5. Set the SLOPE switch in the STOP block to SECOND.
6. Set the TIMING STOP switch to A TRACE 50%.
7. Read the time of one cycle on the readout. Divide 1 by the indicated time to get the frequency in cps or pps.

Phase or Time-Difference Measurement

The following steps show how to measure the time difference between two similar pulses, one in channel A and the other in channel B. You measure the time from the 50% point on the channel A pulse to the 50% point on the channel B pulse. This is the time difference between channel B and A. Return the controls to their preliminary setting. To make a

time-difference measurement, proceed as follows:

1. Set both START and STOP slope switches to FIRST and +.
2. Set the TIMING START switch to A TRACE 50%.
3. Set the TIMING STOP switch to B TRACE 50%.
4. The number shown on the readout is the delay of channel B with respect to channel A (see Fig. 2-4).

In this example you could have had channel A delayed, in which case you would start on B TRACE 50% and stop on A TRACE 50%.

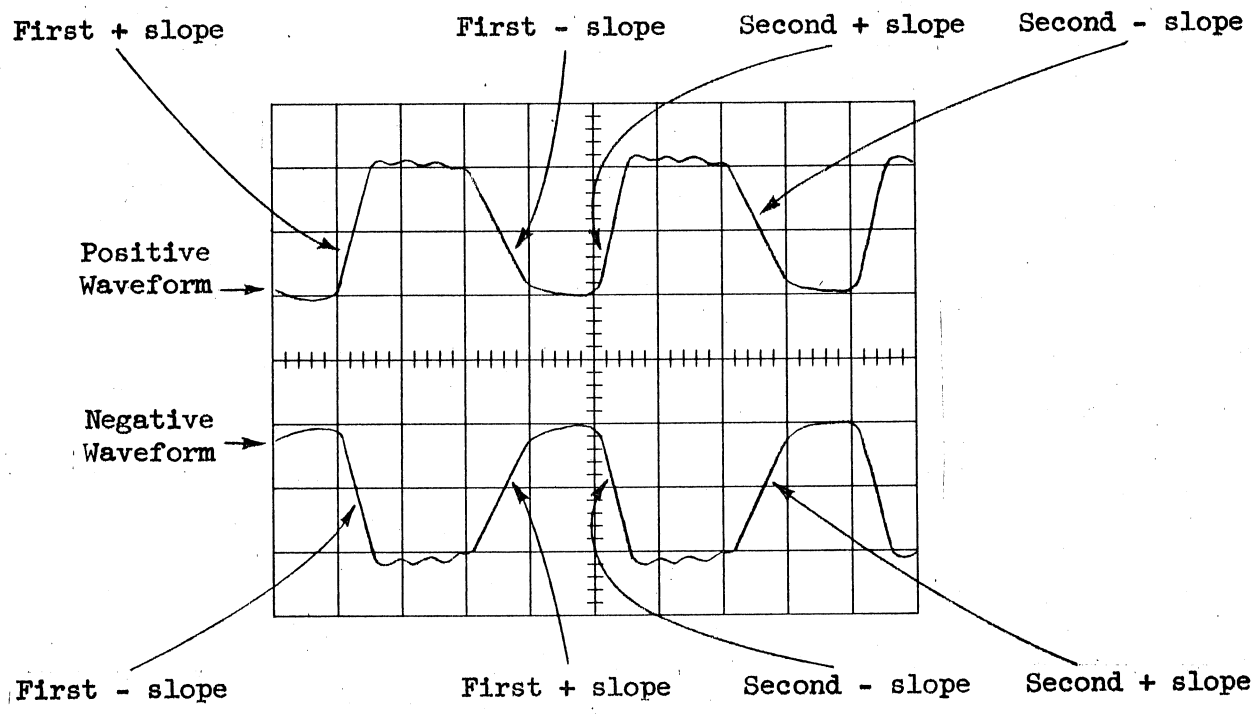

Fig. 2-1. Waveform slope definitions.

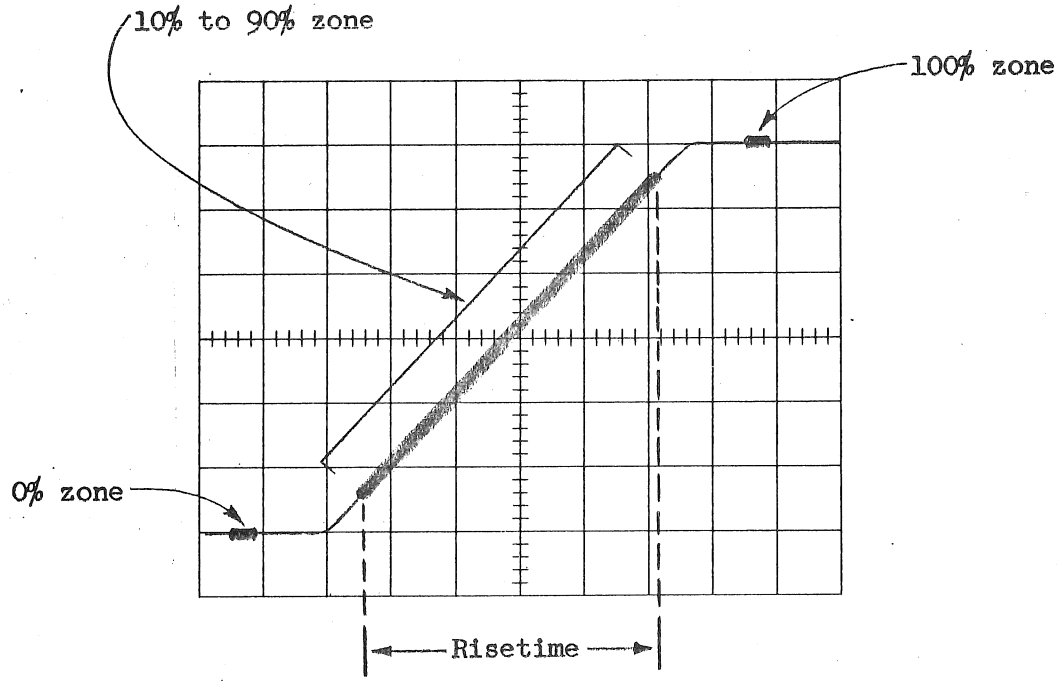

Fig. 2-2. Risetime measurement.

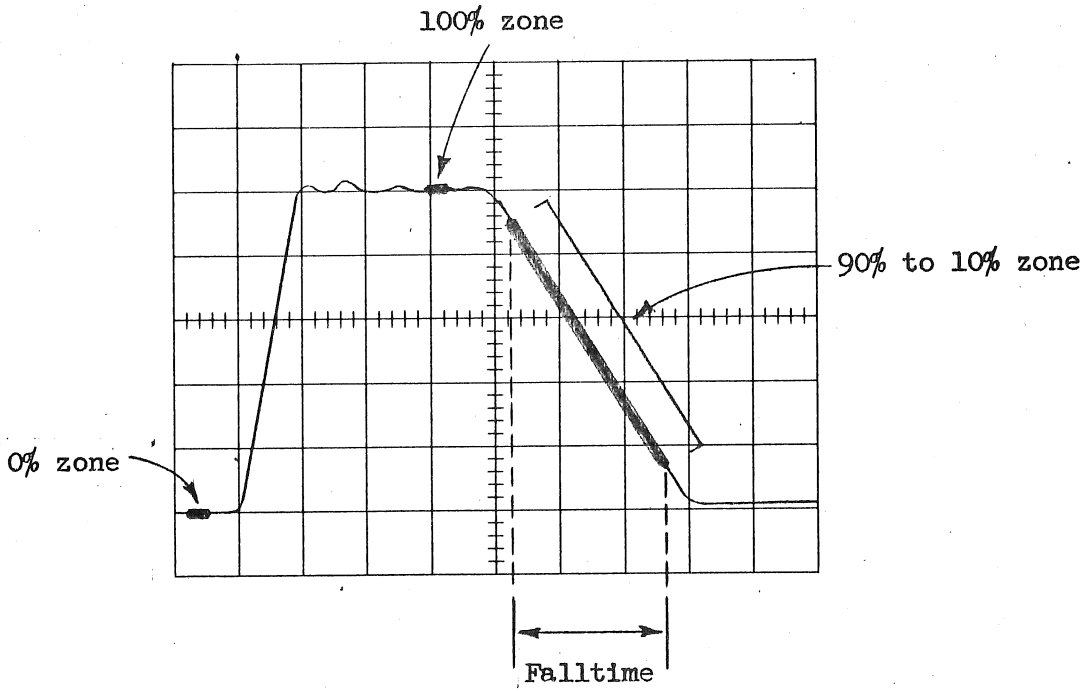

Fig. 2-3. Falltime measurement.

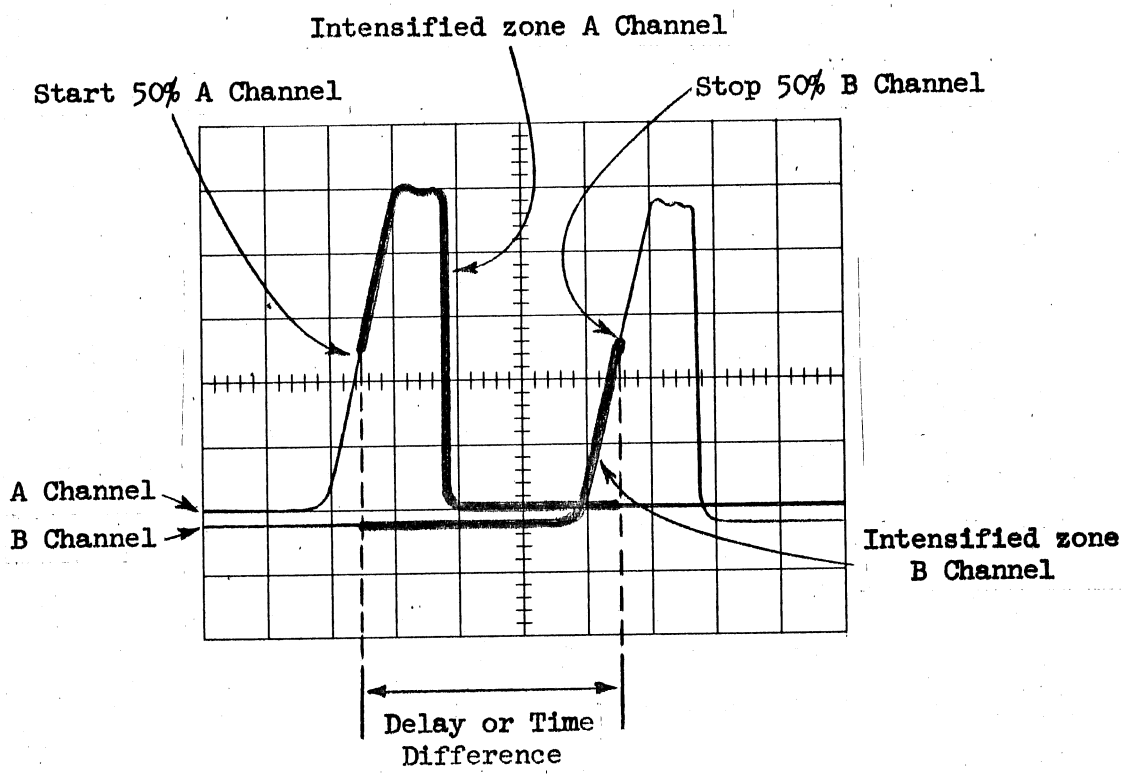

Fig. 2-4. Delay or time-difference measurement.

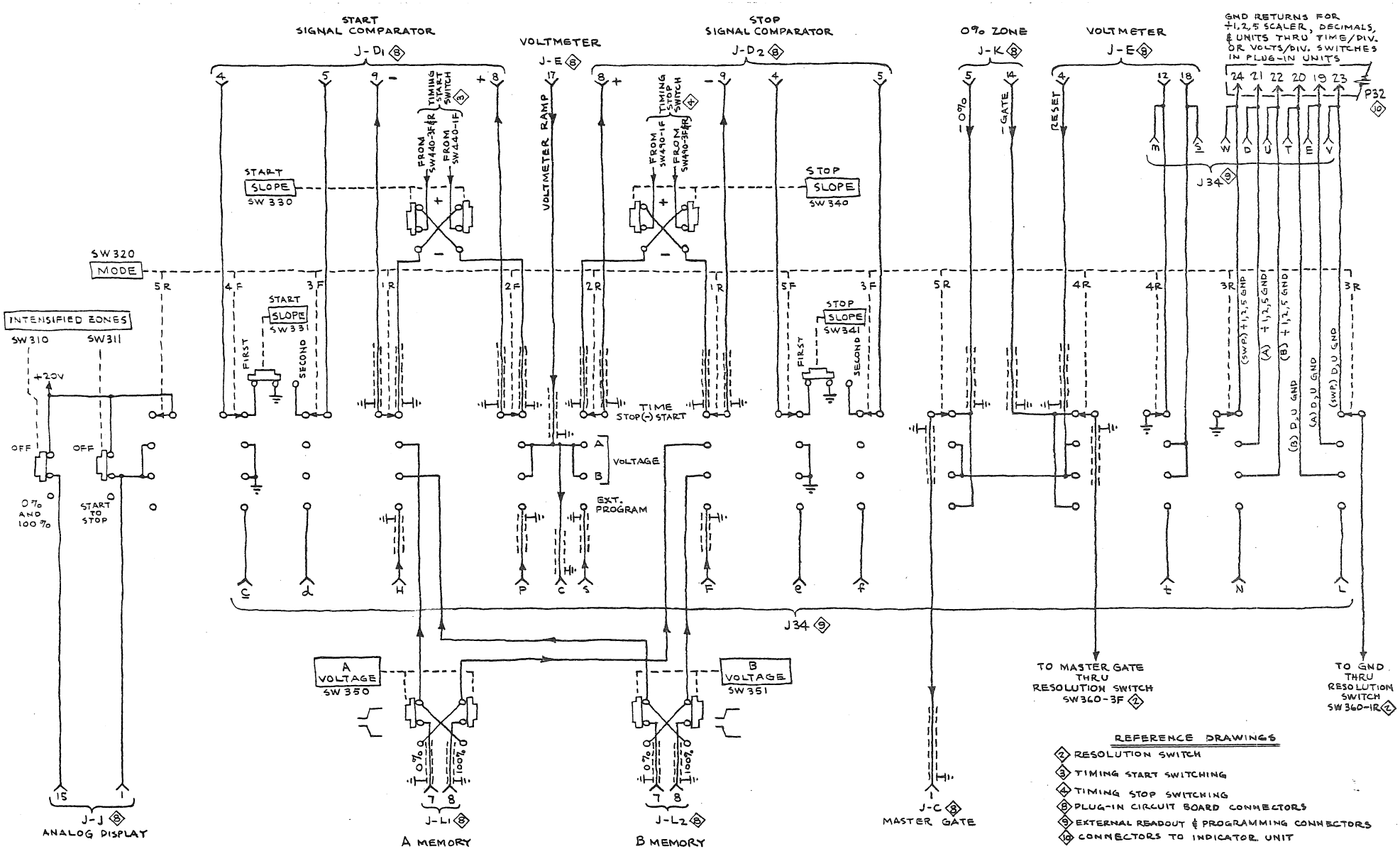

TYPE GR1

MODE SWITCH

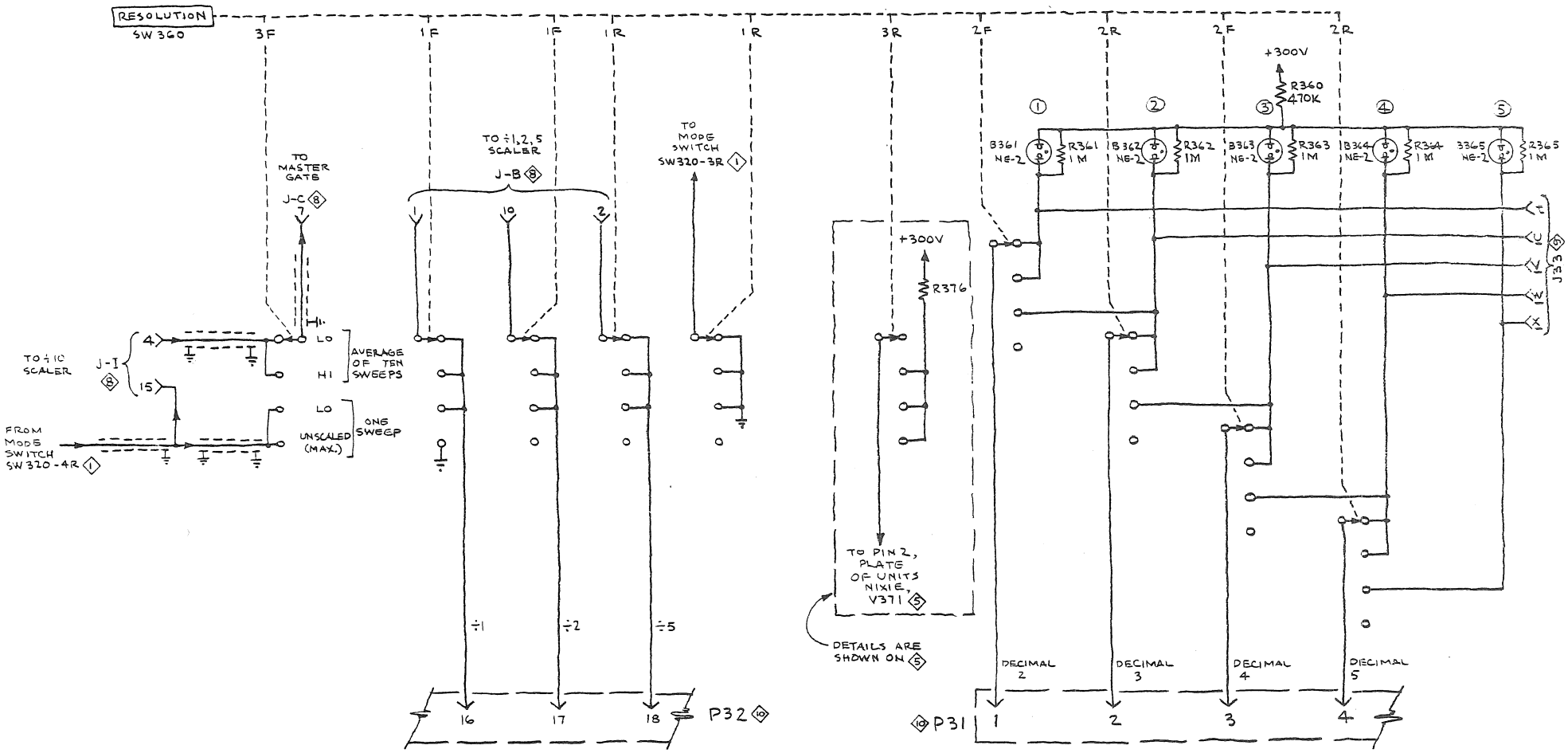

REFERENCE DRAWINGS

- 1 MODE SWITCH
- 5 READOUT TUBES
- 8 PLUG-IN CIRCUIT BOARD CONNECTORS
- 9 EXTERNAL READOUT & PROGRAMMING CONNECTORS
- 10 CONNECTORS TO INDICATOR UNIT

6R1

RESOLUTION SWITCH

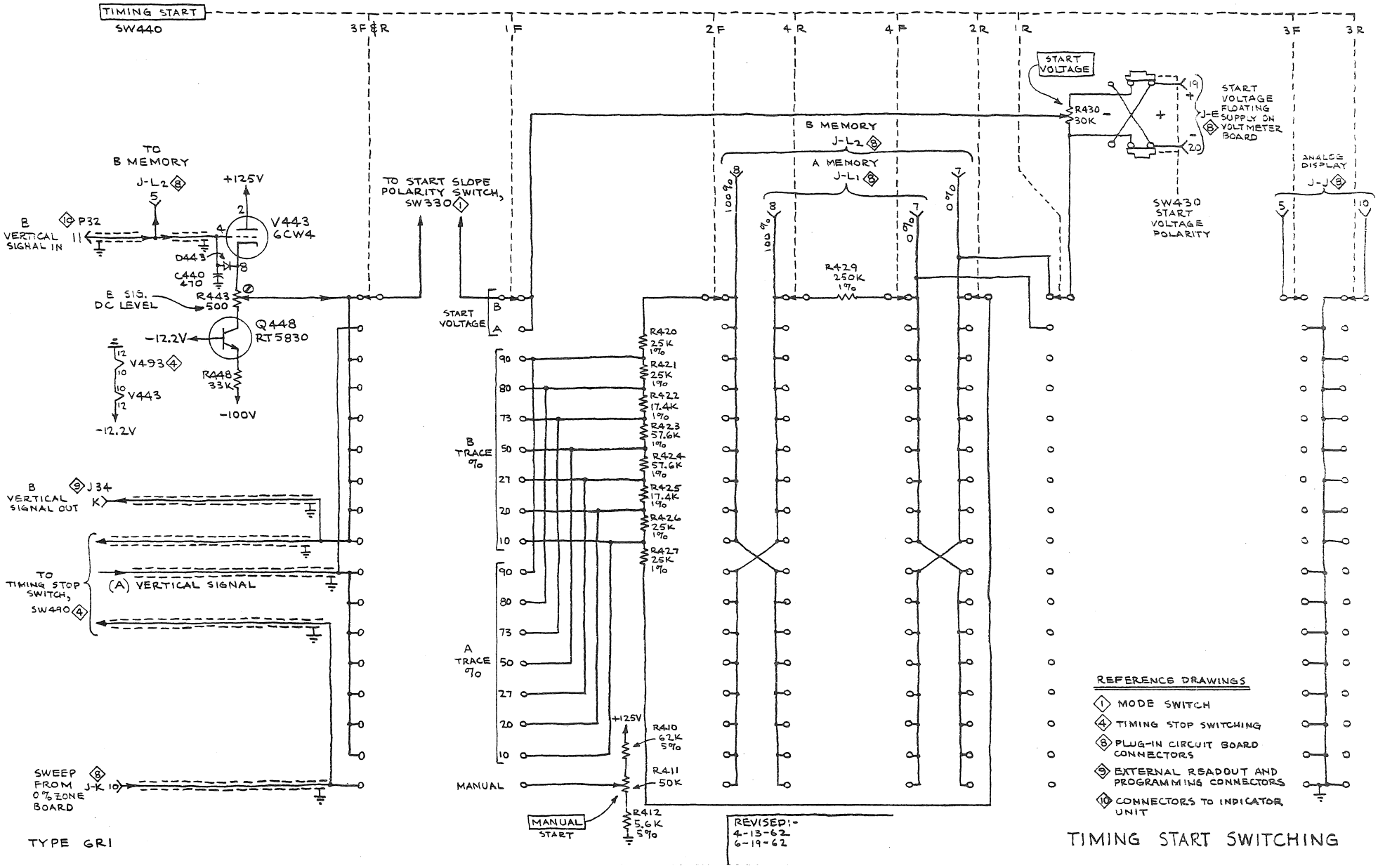
TIMING START
SW440
3F & R
1F
2F
4R
4F
2R
1R
3F
3R
START VOLTAGE
R430 30K
START VOLTAGE FLOATING SUPPLY ON VOLT METER BOARD
J-E
SW430 START VOLTAGE POLARITY
ANALOG DISPLAY
J-J
B MEMORY
J-L2
A MEMORY
J-L1
R429 250K 1%
TO B MEMORY
J-L2
+125V
V443 6CW4
B VERTICAL SIGNAL IN
P32
D443
C440 470
R443 500
B SIG. DC LEVEL
Q448 RT5830
-12.2V
V493
V443
R448 33K
-100V
-12.2V
TO START SLOPE POLARITY SWITCH, SW330
START VOLTAGE
B
A
B TRACE %
A TRACE %
R420 25K 1%
R421 25K 1%
R422 17.4K 1%
R423 57.6K 1%
R424 57.6K 1%
R425 17.4K 1%
R426 25K 1%
R427 25K 1%
B VERTICAL SIGNAL OUT
J34
TO TIMING STOP SWITCH, SW490
(A) VERTICAL SIGNAL
SWEEP FROM 0% ZONE BOARD
J-K
MANUAL
MANUAL START
R410 62K 5%
R411 50K
R412 5.6K 5%
REVISED:- 4-13-62 6-19-62
REFERENCE DRAWINGS
1 MODE SWITCH
4 TIMING STOP SWITCHING
8 PLUG-IN CIRCUIT BOARD CONNECTORS
9 EXTERNAL READOUT AND PROGRAMMING CONNECTORS
10 CONNECTORS TO INDICATOR UNIT
TYPE GR1
TIMING START SWITCHING

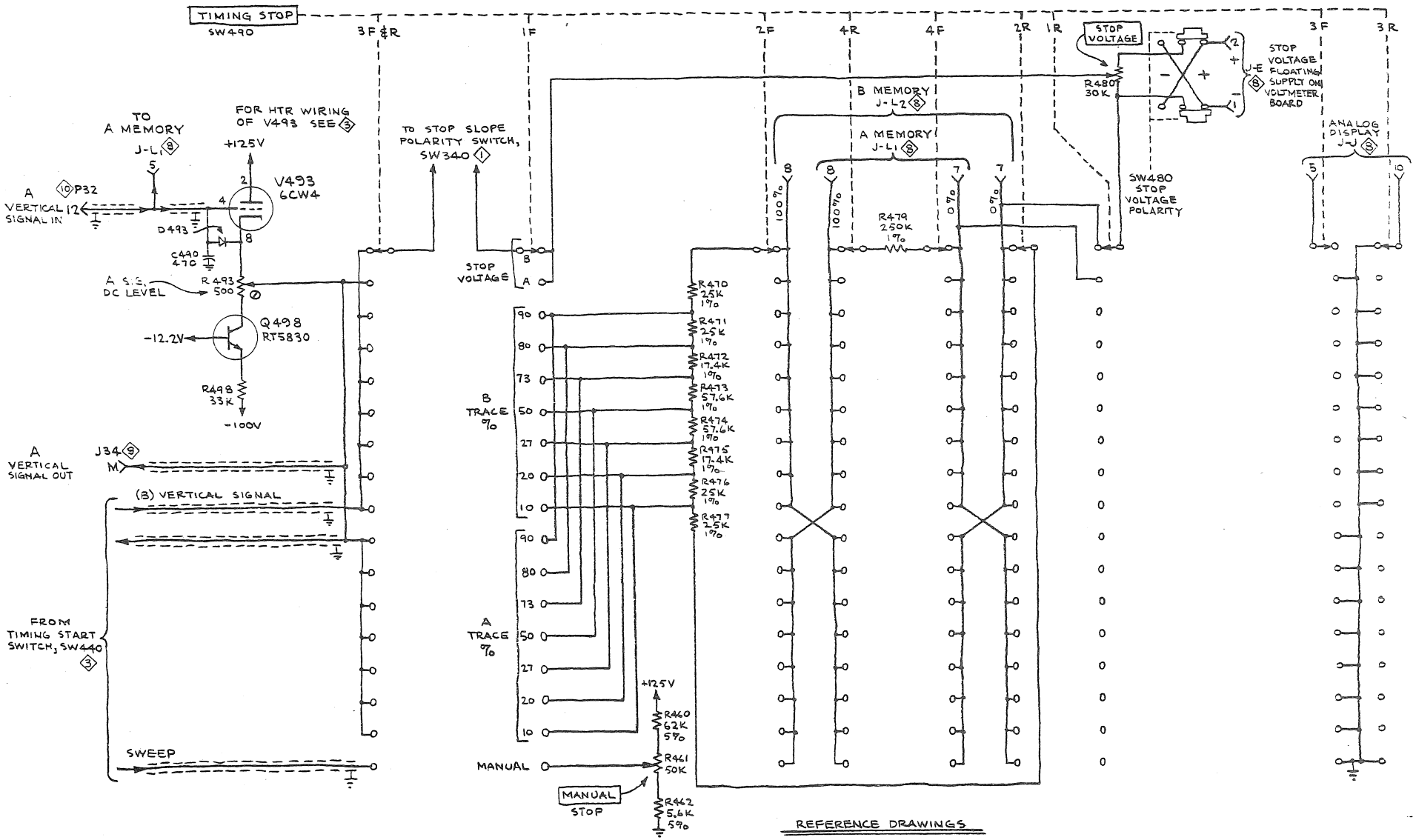

REFERENCE DRAWINGS

1 MODE SWITCH
3 TIMING START SWITCHING
8 PLUG-IN CIRCUIT BOARD CONNECTORS
9 EXTERNAL READOUT AND PROGRAMMING CONNECTORS
10 CONNECTORS TO INDICATOR UNIT

REVISED:-
6-19-62

TYPE GR1

TIMING STOP SWITCHING

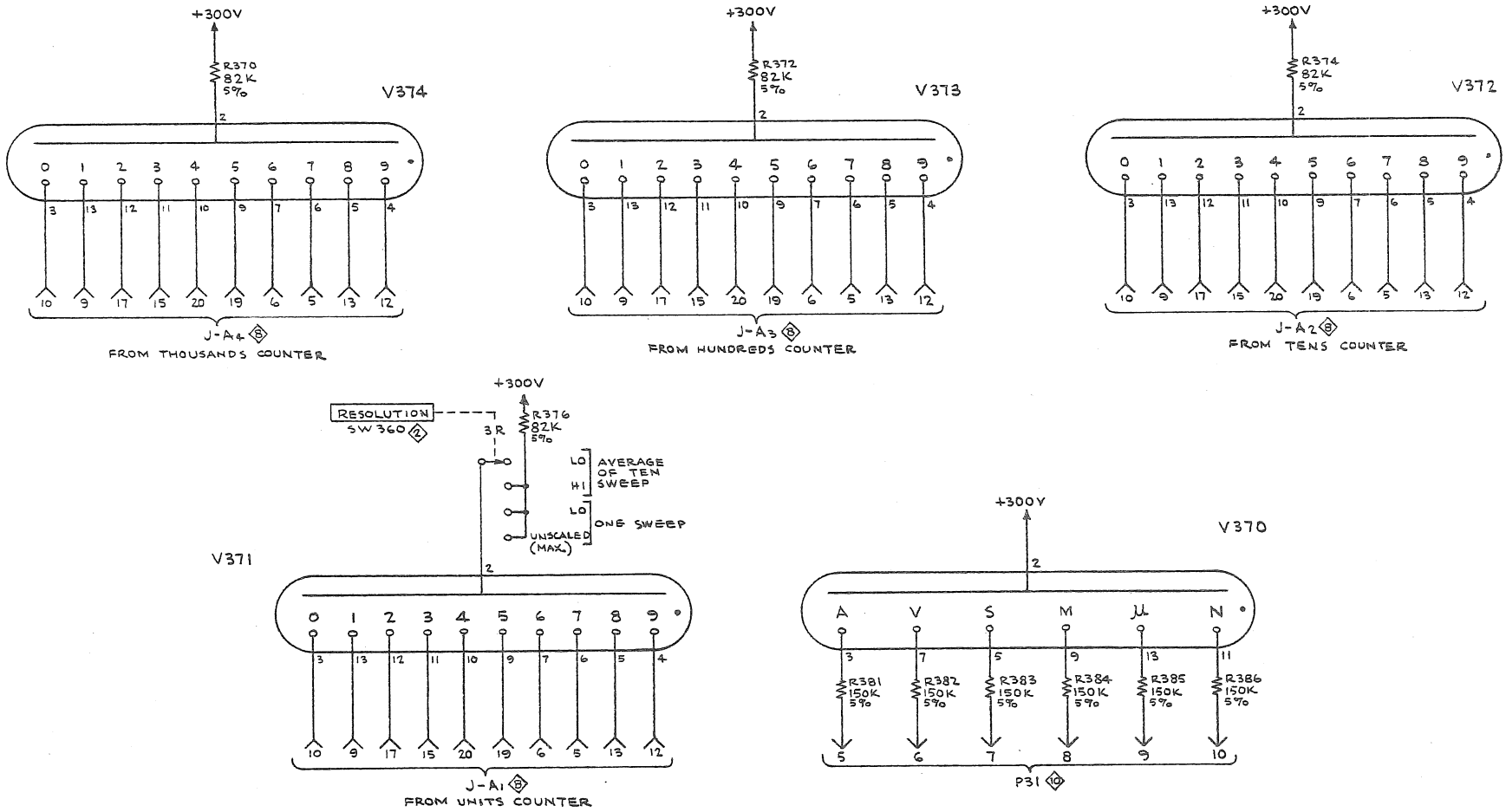

REFERENCE DRAWINGS

4 RESOLUTION SWITCH
8 PLUG-IN CIRCUIT BOARD CONNECTORS
10 CONNECTORS TO INDICATOR UNIT

TYPE GR1

READOUT TUBES

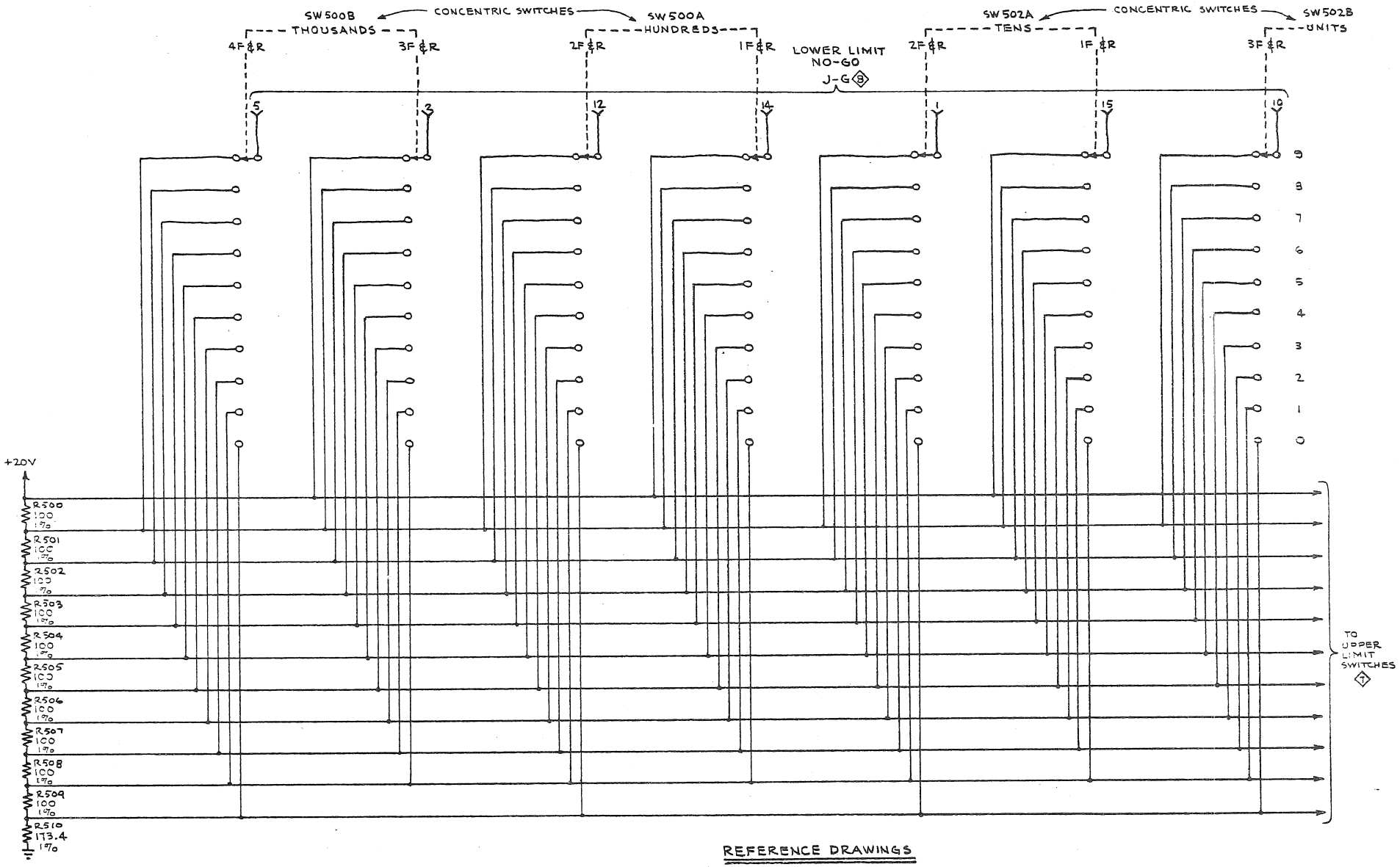

REFERENCE DRAWINGS

7 UPPER LIMIT SWITCHES

8 PLUG-IN CIRCUIT BOARD CONNECTOR

TYPE 6R1

LOWER LIMIT SWITCHES

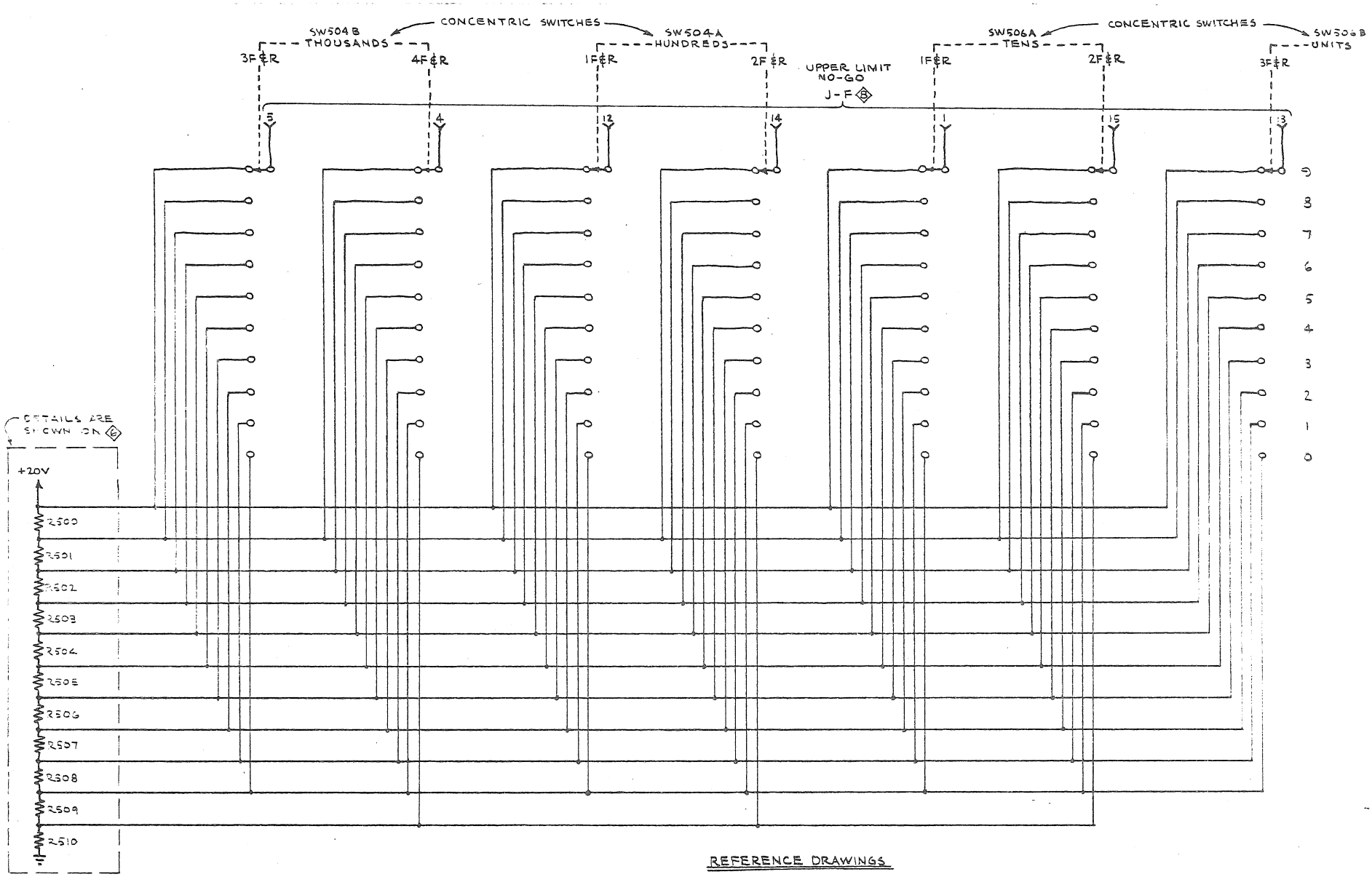

REFERENCE DRAWINGS

LOWER LIMIT SWITCHES

PLUG-IN CIRCUIT BOARD CONNECTORS

UPPER LIMIT SWITCHES

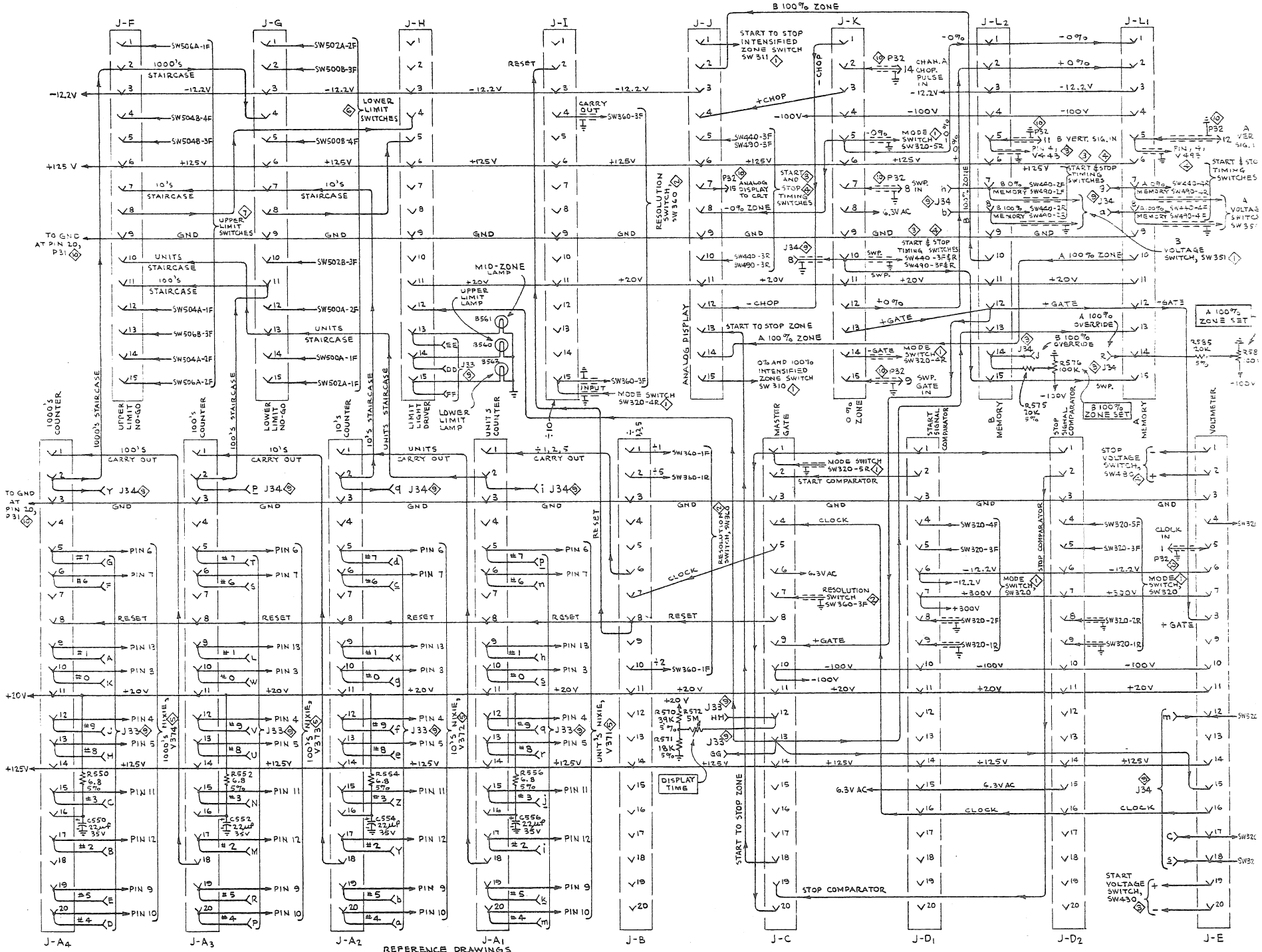

PLUG-IN CIRCUIT BOARD CONNECTORS

EXTERNAL READOUT

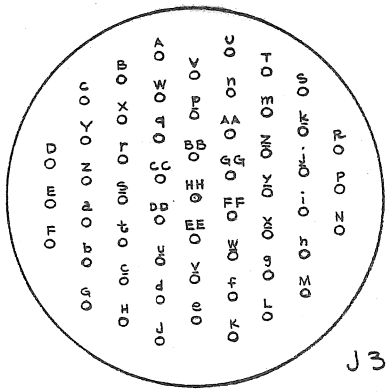

J33

A	1000'S - 1,	PIN 9,	J-A4 (8)	f	10'S - 9, PIN 12, J-A2 (8)
B	" 2,	" 17,	"	g	" 0, " 10, "
C	" 3,	" 15,	"	h	1'S - 1, PIN 9, J-A1 (8)
D	" 4,	" 20,	"	i	" 2, " 17, "
E	" 5,	" 19,	"	j	" 3, " 15, "
F	" 6,	" 6,	"	k	" 4, " 20, "
G	" 7,	" 5,	"	m	" 5, " 19, "
H	" 8,	" 13,	"	n	" 6, " 6, "
J	" 9,	" 12,	"	p	" 7, " 5, "
K	" 0,	" 10,	"	q	" 8, " 13, "
L	100'S - 1,	PIN 9,	J-A3 (8)	r	" 9, " 12, "
M	" 2,	" 17,	"	s	" 0, " 10, "
N	" 3,	" 15,	"	t	DECIMAL 1 FROM SW360-2F (2)
P	" 4,	" 20,	"	u	" 2 " " 2F & R (2)
R	" 5,	" 19,	"	v	" 3 " " 2R & F (4)
S	" 6,	" 6,	"	w	" 4 " " 2F & R (2)
T	" 7,	" 5,	"	x	" 5 " " 2R (2)
U	" 8,	" 13,	"	y	m FROM PIN 8, P31 (10)
V	" 9,	" 12,	"	z	n " " 10, "
W	" 0,	" 10,	"	AA	μ " " 9, "
X	10'S - 1,	PIN 9,	J-A2 (8)	BB	V " " 6, "
Y	" 2,	" 17,	"	CC	S " " 7, "
Z	" 3,	" 15,	"	DD	NO-GO UPPER LIMIT FROM PIN 14, J-H (8)
a	" 4,	" 20,	"	EE	" MID-ZONE " " 13, "
b	" 5,	" 19,	"	FF	" LOWER LIMIT " " 15, "
c	" 6,	" 6,	"	GG	PRINT COMMAND FROM PIN 13, J-C (8)
d	" 7,	" 5,	"	HH	DISPLAY TIME FROM PIN 12, J-C (8)
e	" 8,	" 13,	"		

TYPE 6R1

EXTERNAL PROGRAMMING

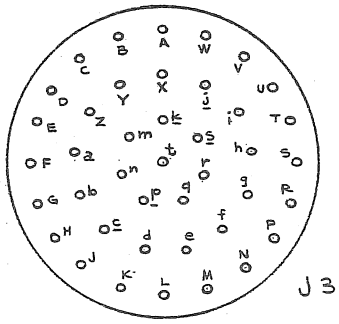

J34

A	GROUND	a	100% A MEMORY FROM PIN 8, J-L1 (8)
B	SWEEP OUT FROM PIN 10, J-K (8)	b	100% B MEMORY FROM PIN 8, J-L2 (8)
C	VOLTMETER RAMP FROM PIN 17, J-E (8)	c	1ST START SLOPE TO SW320-4F (1)
D	A VERT. ÷1,2,5 GND TO PIN 21, P32 (10)	d	2ND START SLOPE TO SW320-3F (1)
E	A VERT. DEC., UNITS GND TO PIN 19, P32 (10)	e	1ST STOP SLOPE TO SW320-5F (1)
F	-STOP COMPARATOR TO SW320-1R (1)	f	2ND STOP SLOPE TO SW320-3F (1)
G	+20V	g	0% A MEMORY FROM PIN 7, J-L1 (8)
H	-START COMPARATOR TO SW320-1R (1)	h	0% B MEMORY FROM PIN 7, J-L2 (8)
J	B 100% OVERRIDE TO PIN 14, J-L2 (8)	i	SPARE
K	B SIGNAL FROM START, SW440, 3F & R (3)	j	1'S STAIRCASE FROM PIN 2, J-A1 (8)
L	DEC., UNITS RETURN FROM SW320-3R (1)	k	SPARE
M	A SIGNAL FROM STOP, SW490, 3F & R (4)	m	TIME CLOCK TO PIN 12, J-E (8)
N	÷1,2,5 RETURN FROM SW320-3R (1)	n	SPARE
P	+START COMPARATOR TO SW320-2F (1)	p	100'S STAIRCASE FROM PIN 2, J-A3 (8)
R	A 100% OVERRIDE TO PIN 14, J-L1 (8)	q	10'S STAIRCASE FROM PIN 2, J-A2 (8)
S	+STOP COMPARATOR TO SW320-2R (1)	r	SPARE
T	B VERT. DEC., UNITS GND TO PIN 20, P32 (10)	s	VOLT METER OSC TO PIN 18, J-E (8)
U	B VERT. ÷1,2,5 GND TO PIN 22, P32 (10)	t	VM OSC, TIME CLOCK RETURN FROM SW320-4R (1)
V	HORIZ. DEC., UNITS GND TO PIN 23, P32 (10)		
W	HORIZ. ÷1,2,5 GND TO PIN 24, P32 (10)		
X	SPARE		
Y	1000'S STAIRCASE FROM PIN 2, J-A4 (8)		
Z	SPARE		

REFERENCE DRAWINGS
- (3) TIMING START SWITCHING
- (4) TIMING STOP SWITCHING
- (1) MODE SWITCH
- (2) RESOLUTION SWITCH
- (8) PLUG-IN CIRCUIT BOARD CONNECTORS
- (10) CONNECTOR TO INDICATOR UNIT

EXTERNAL READOUT & PROGRAMMING CONNECTORS

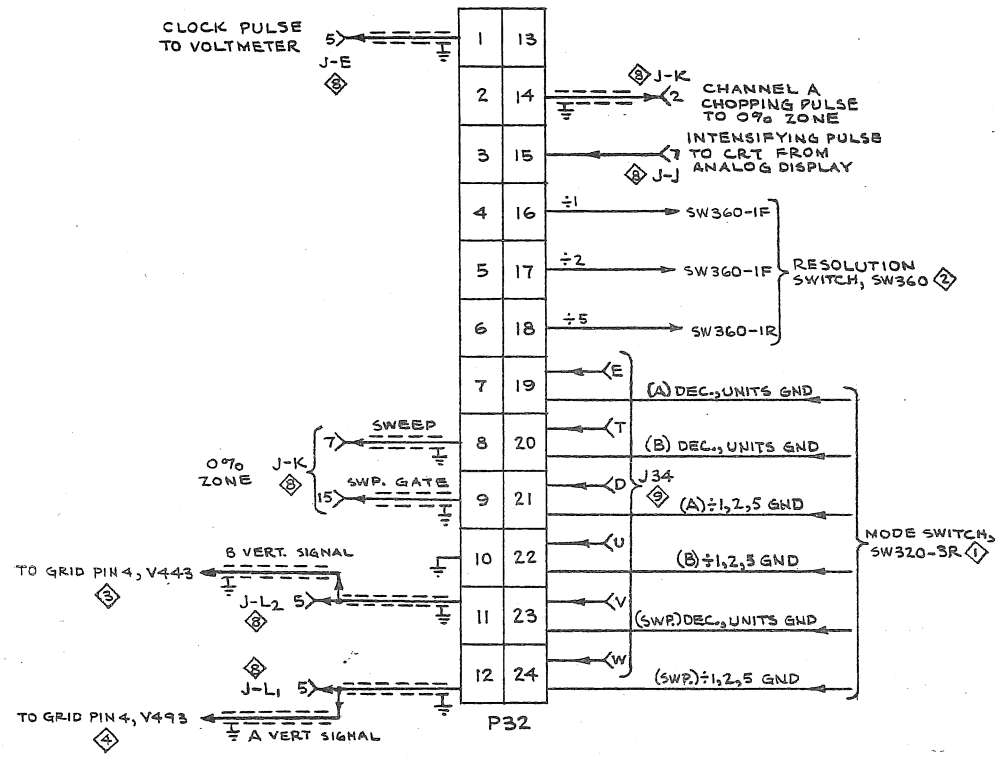

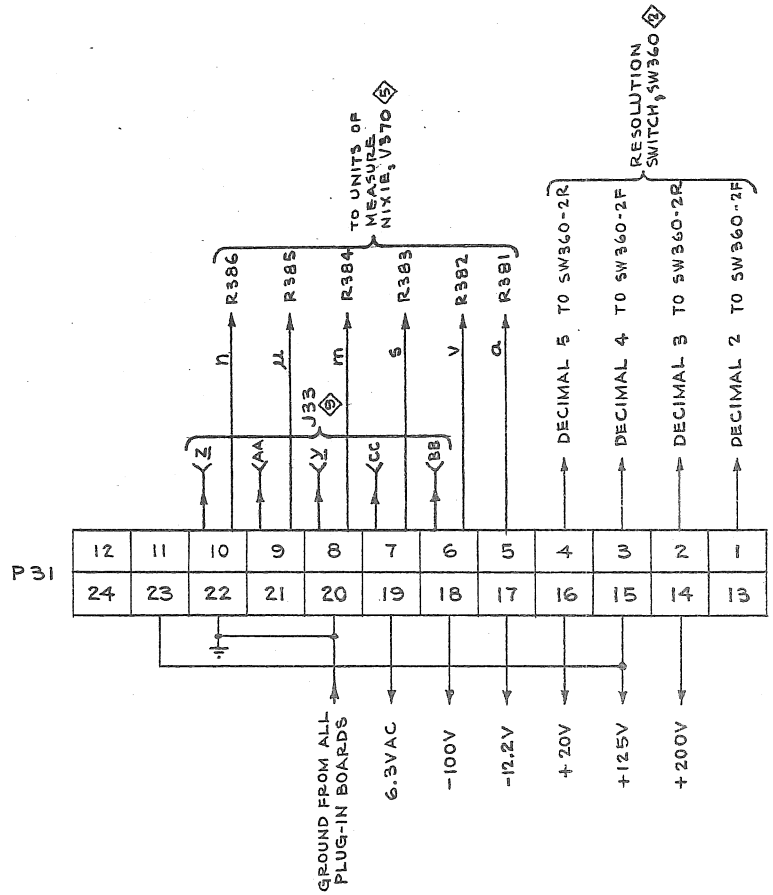

REFERENCE DRAWINGS

1. MODE SWITCH
2. RESOLUTION SWITCH
3. TIMING START SWITCHING
5. READOUT TUBES
8. PLUG-IN CIRCUIT BOARD CONNECTORS
9. EXTERNAL READOUT & PROGRAMMING CONNECTORS
4. TIMING STOP SWITCHING

GAD

TYPE 6R1

CONNECTORS TO INDICATOR UNIT

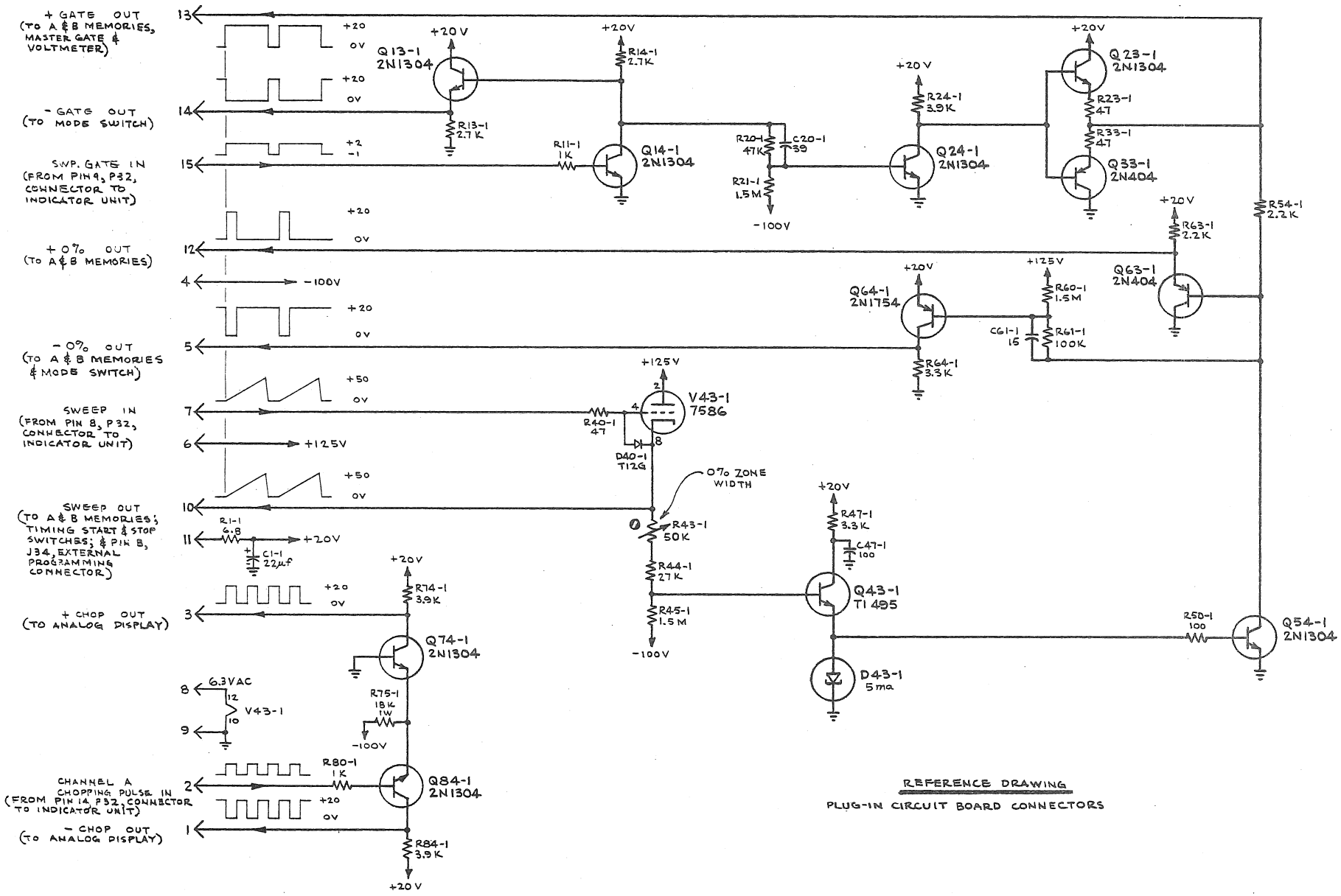

TYPE GR1

0% ZONE

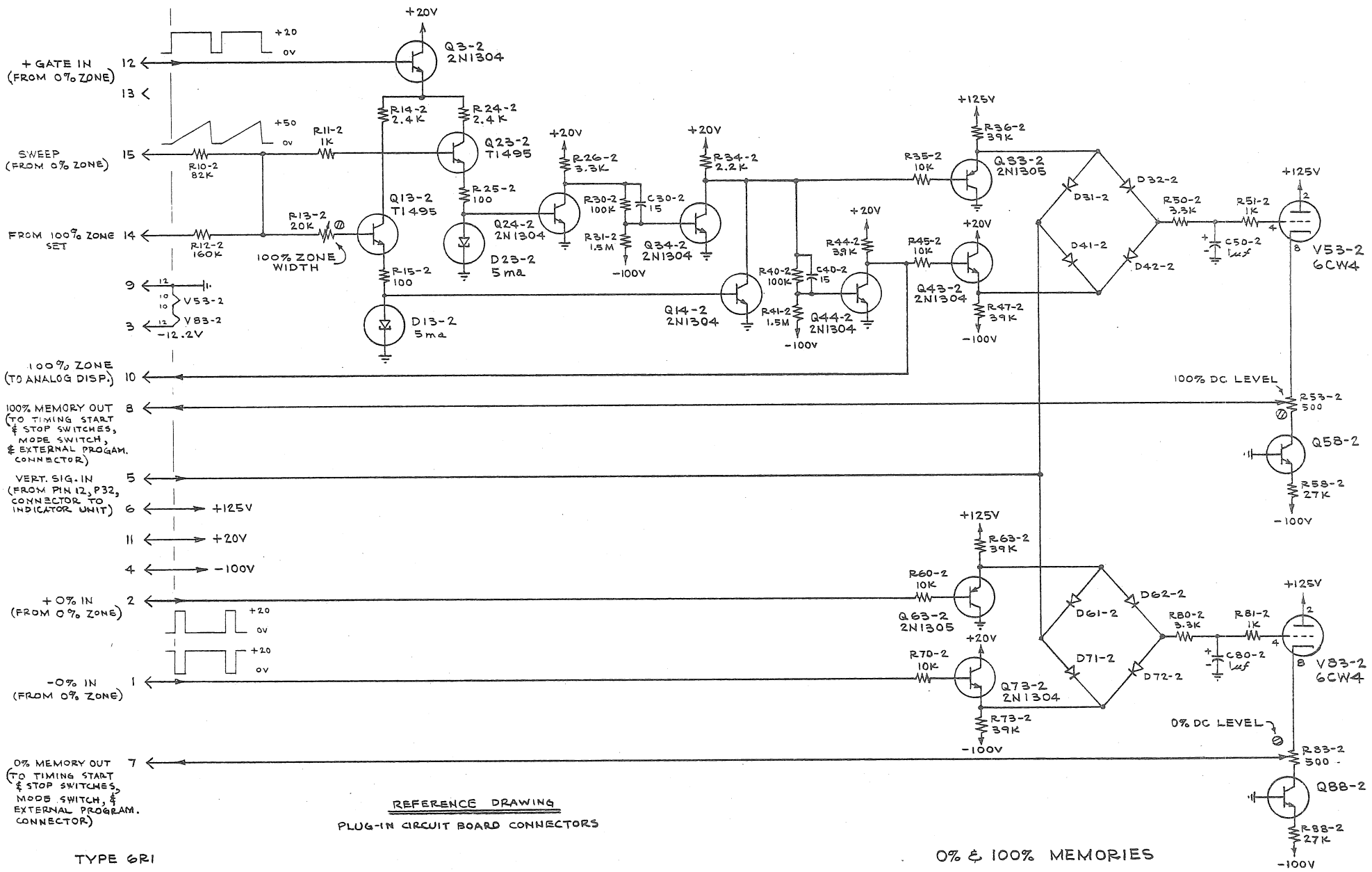

REFERENCE DRAWING

PLUG-IN CIRCUIT BOARD CONNECTORS

TYPE 6R1

0% & 100% MEMORIES

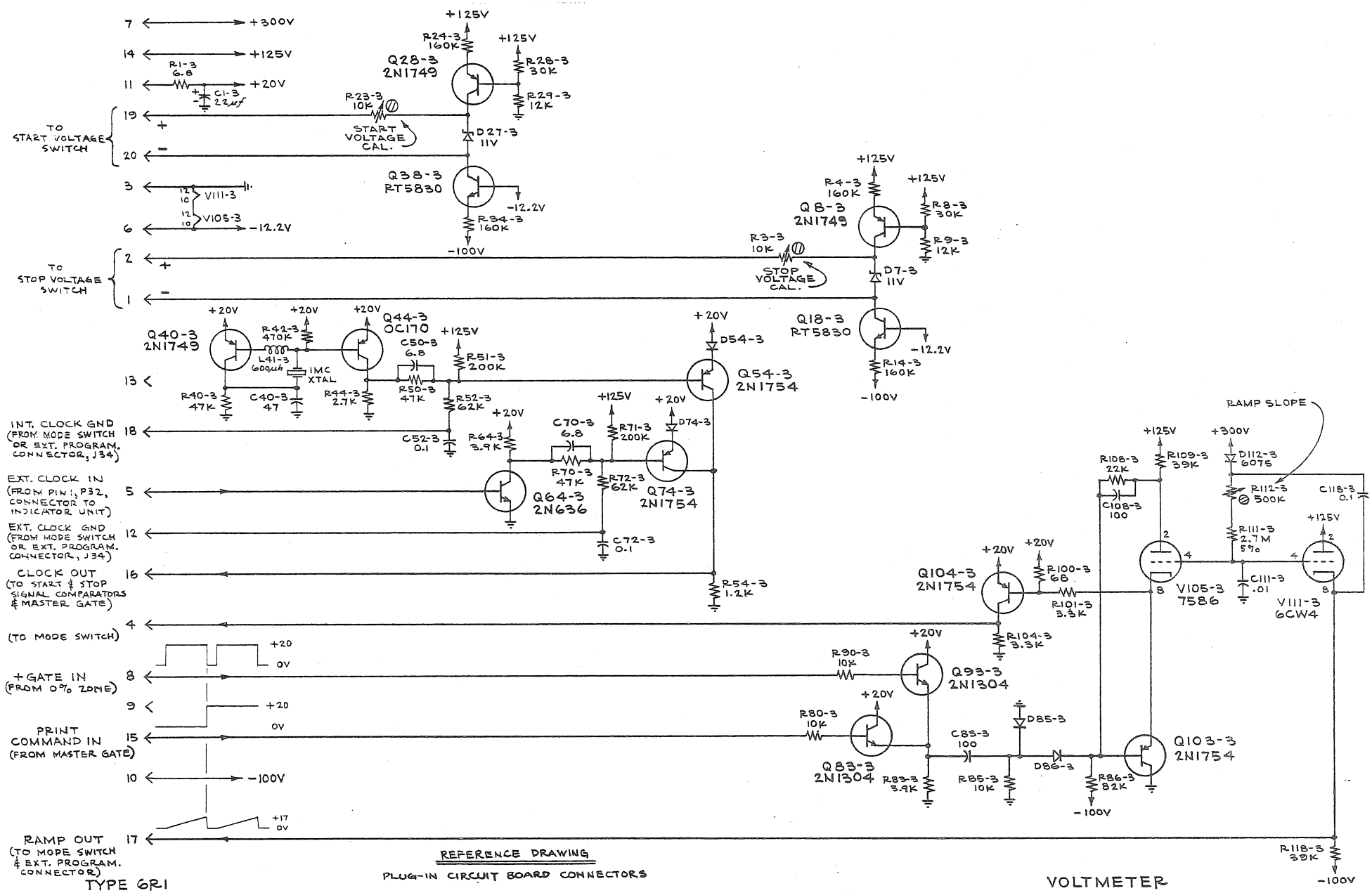

REFERENCE DRAWING

PLUG-IN CIRCUIT BOARD CONNECTORS

TYPE 6R1

VOLTMETER

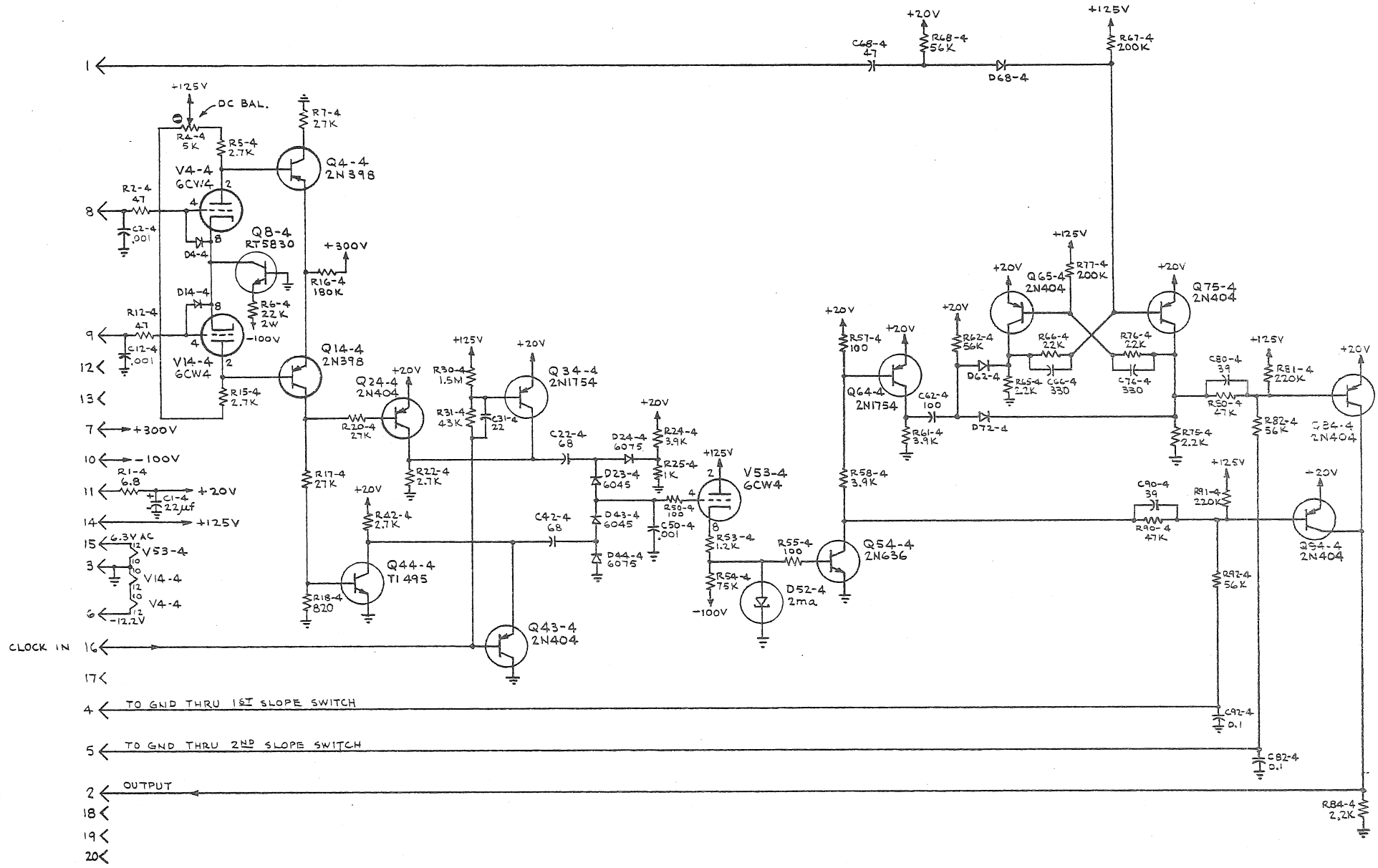

TYPE 6R1

SIGNAL COMPARATOR

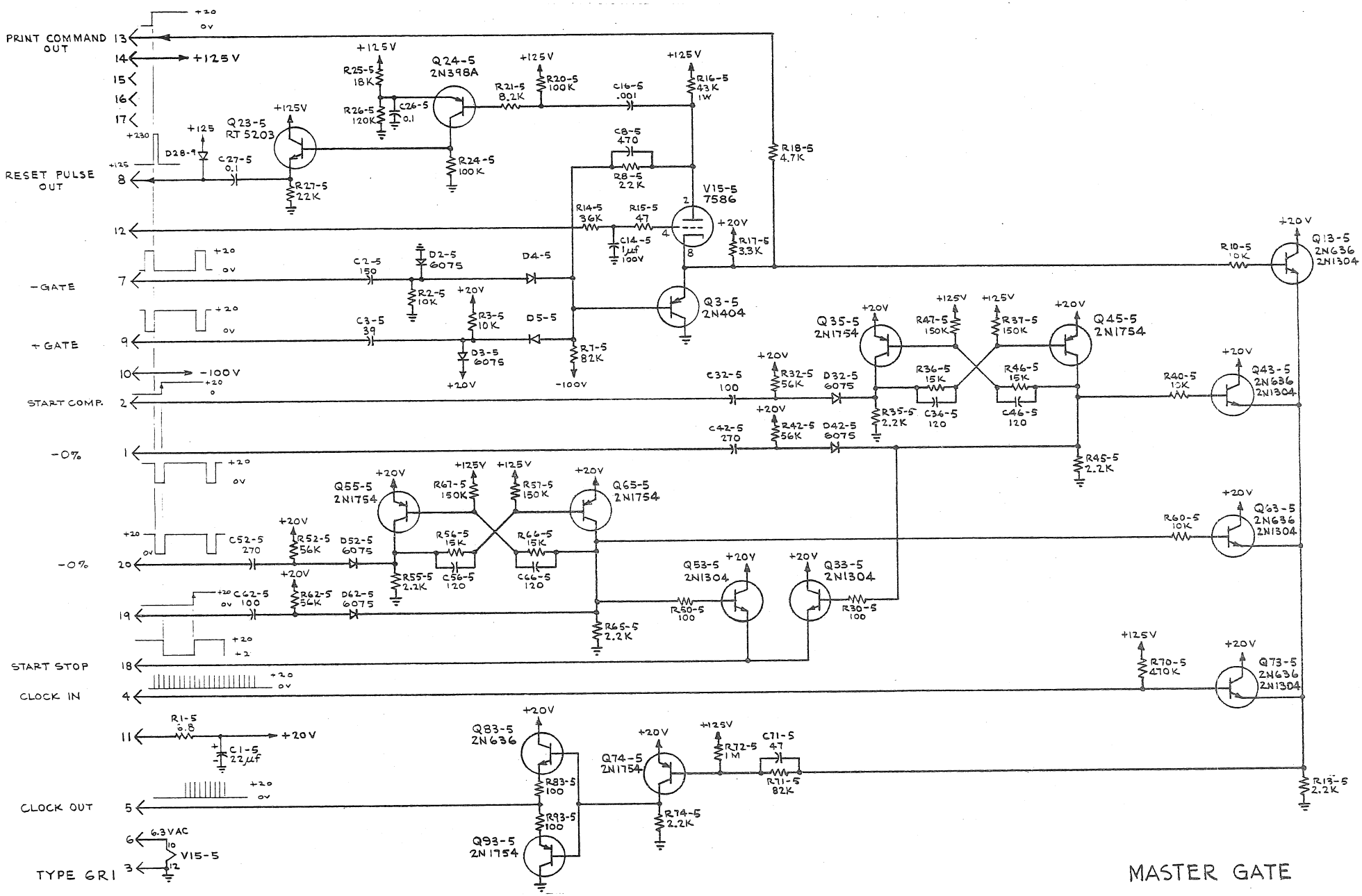
PRINT COMMAND OUT
+125V
RESET PULSE OUT
-GATE
+GATE
-100V
START COMP.
-0%
-0%
START STOP
CLOCK IN
CLOCK OUT
TYPE 6R1
6.3VAC
V15-5
Q24-5 2N398A
Q23-5 RT 5203
V15-5 7586
Q3-5 2N404
Q35-5 2N1754
Q45-5 2N1754
Q55-5 2N1754
Q65-5 2N1754
Q13-5 2N636 2N1304
Q43-5 2N636 2N1304
Q63-5 2N636 2N1304
Q73-5 2N636 2N1304
Q53-5 2N1304
Q33-5 2N1304
Q83-5 2N636
Q93-5 2N1754
Q74-5 2N1754
R25-5 18K
R26-5 120K
C26-5 0.1
R21-5 8.2K
R20-5 100K
C16-5 .001
R16-5 43K 1W
R18-5 4.7K
C8-5 470
R8-5 22K
R24-5 100K
R27-5 22K
C27-5 0.1
D28-9
R14-5 36K
R15-5 47
C14-5 1μf 100V
R17-5 3.3K
C2-5 150
D2-5 6075
D4-5
R2-5 10K
C3-5 39
R3-5 10K
D5-5
D3-5 6075
R7-5 82K
C32-5 100
R32-5 56K
D32-5 6075
R35-5 2.2K
R36-5 15K
C36-5 120
R47-5 150K
R37-5 150K
R46-5 15K
C46-5 120
R40-5 10K
R45-5 2.2K
C42-5 270
R42-5 56K
D42-5 6075
R10-5 10K
C52-5 270
R52-5 56K
D52-5 6075
R55-5 2.2K
R56-5 15K
C56-5 120
R67-5 150K
R57-5 150K
R66-5 15K
C66-5 120
R60-5 10K
C62-5 100
R62-5 56K
D62-5 6075
R65-5 2.2K
R50-5 100
R30-5 100
R70-5 470K
R1-5 3.8
C1-5 22μf
R83-5 100
R93-5 100
R72-5 1M
C71-5 47
R71-5 82K
R74-5 2.2K
R13-5 2.2K

MASTER GATE

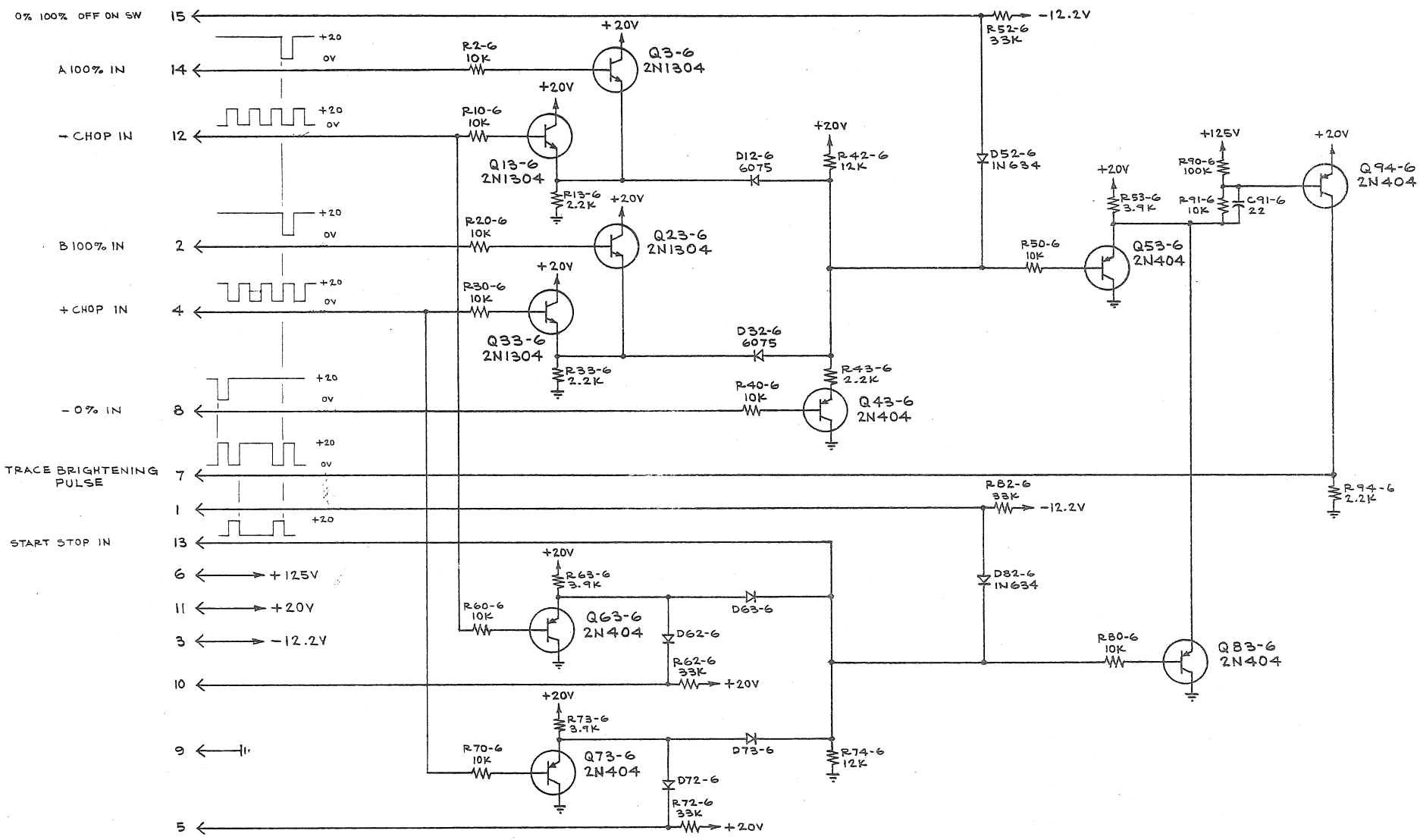

TYPE 6R1

ANALOG DISPLAY

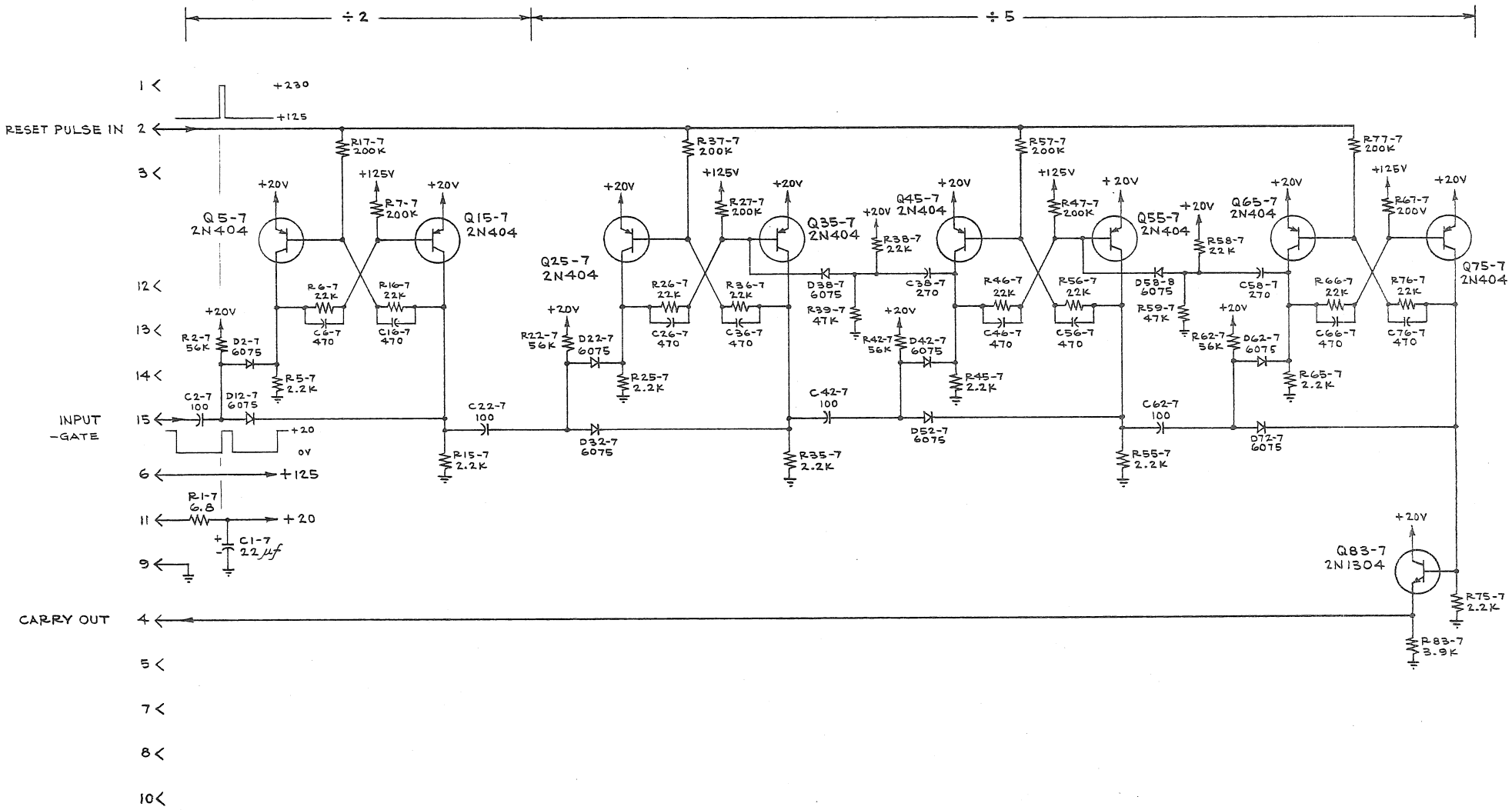
÷ 2
÷ 5
RESET PULSE IN
INPUT
-GATE
CARRY OUT
+230
+125
+20
0V
Q5-7 2N404
Q15-7 2N404
Q25-7 2N404
Q35-7 2N404
Q45-7 2N404
Q55-7 2N404
Q65-7 2N404
Q75-7 2N404
Q83-7 2N1304
R17-7 200K
R7-7 200K
R37-7 200K
R27-7 200K
R57-7 200K
R47-7 200K
R77-7 200K
R67-7 200V
R6-7 22K
R16-7 22K
R26-7 22K
R36-7 22K
R46-7 22K
R56-7 22K
R66-7 22K
R76-7 22K
C6-7 470
C16-7 470
C26-7 470
C36-7 470
C46-7 470
C56-7 470
C66-7 470
C76-7 470
R2-7 56K
D2-7 6075
R5-7 2.2K
R22-7 56K
D22-7 6075
R25-7 2.2K
R38-7 22K
D38-7 6075
R39-7 47K
C38-7 270
R42-7 56K
D42-7 6075
R45-7 2.2K
R58-7 22K
D58-8 6075
R59-7 47K
C58-7 270
R62-7 56K
D62-7 6075
R65-7 2.2K
C2-7 100
D12-7 6075
C22-7 100
D32-7 6075
R15-7 2.2K
C42-7 100
D52-7 6075
R35-7 2.2K
C62-7 100
D72-7 6075
R55-7 2.2K
R1-7 6.8
C1-7 22μf
R75-7 2.2K
R83-7 3.9K

TYPE 6R1

÷ 10

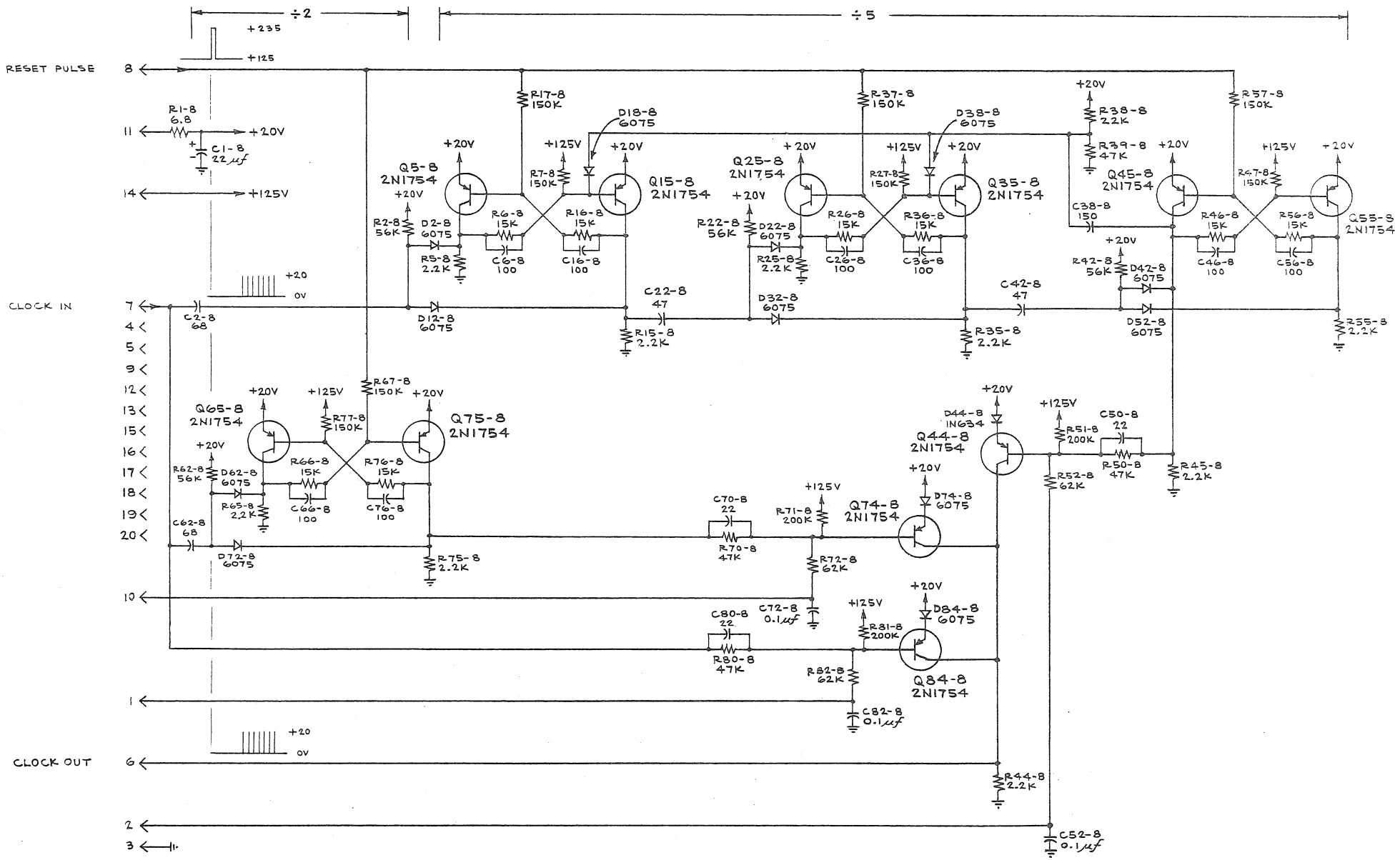
÷2
÷5
+235
+125
RESET PULSE
8
R1-8 6.8
11
+20V
C1-8 22 μf
14
+125V
CLOCK IN
7
C2-8 68
+20
0V
4
5
9
12
13
15
16
17
18
19
20
10
1
CLOCK OUT
6
2
3
R17-8 150K
D18-8 6075
Q5-8 2N1754
Q15-8 2N1754
R2-8 56K
D2-8 6075
R5-8 2.2K
R6-8 15K
C6-8 100
R16-8 15K
C16-8 100
R7-8 150K
D12-8 6075
C22-8 47
R15-8 2.2K
R37-8 150K
D38-8 6075
Q25-8 2N1754
Q35-8 2N1754
R22-8 56K
D22-8 6075
R25-8 2.2K
R26-8 15K
C26-8 100
R36-8 15K
C36-8 100
R27-8 150K
D32-8 6075
R35-8 2.2K
C42-8 47
R38-8 22K
R39-8 47K
C38-8 150
Q45-8 2N1754
Q55-8 2N1754
R42-8 56K
D42-8 6075
D52-8 6075
R46-8 15K
C46-8 100
R56-8 15K
C56-8 100
R47-8 150K
R57-8 150K
R55-8 2.2K
Q65-8 2N1754
Q75-8 2N1754
R62-8 56K
D62-8 6075
R65-8 2.2K
R66-8 15K
C66-8 100
R76-8 15K
C76-8 100
R67-8 150K
R77-8 150K
C62-8 68
D72-8 6075
R75-8 2.2K
C70-8 22
R70-8 47K
R71-8 200K
Q74-8 2N1754
D74-8 6075
R72-8 62K
C72-8 0.1μf
C80-8 22
R80-8 47K
R81-8 200K
D84-8 6075
Q84-8 2N1754
R82-8 62K
C82-8 0.1μf
D44-8 1N634
Q44-8 2N1754
R51-8 200K
C50-8 22
R50-8 47K
R52-8 62K
R45-8 2.2K
R44-8 2.2K
C52-8 0.1μf

TYPE 6R1

÷ 1, 2, 5

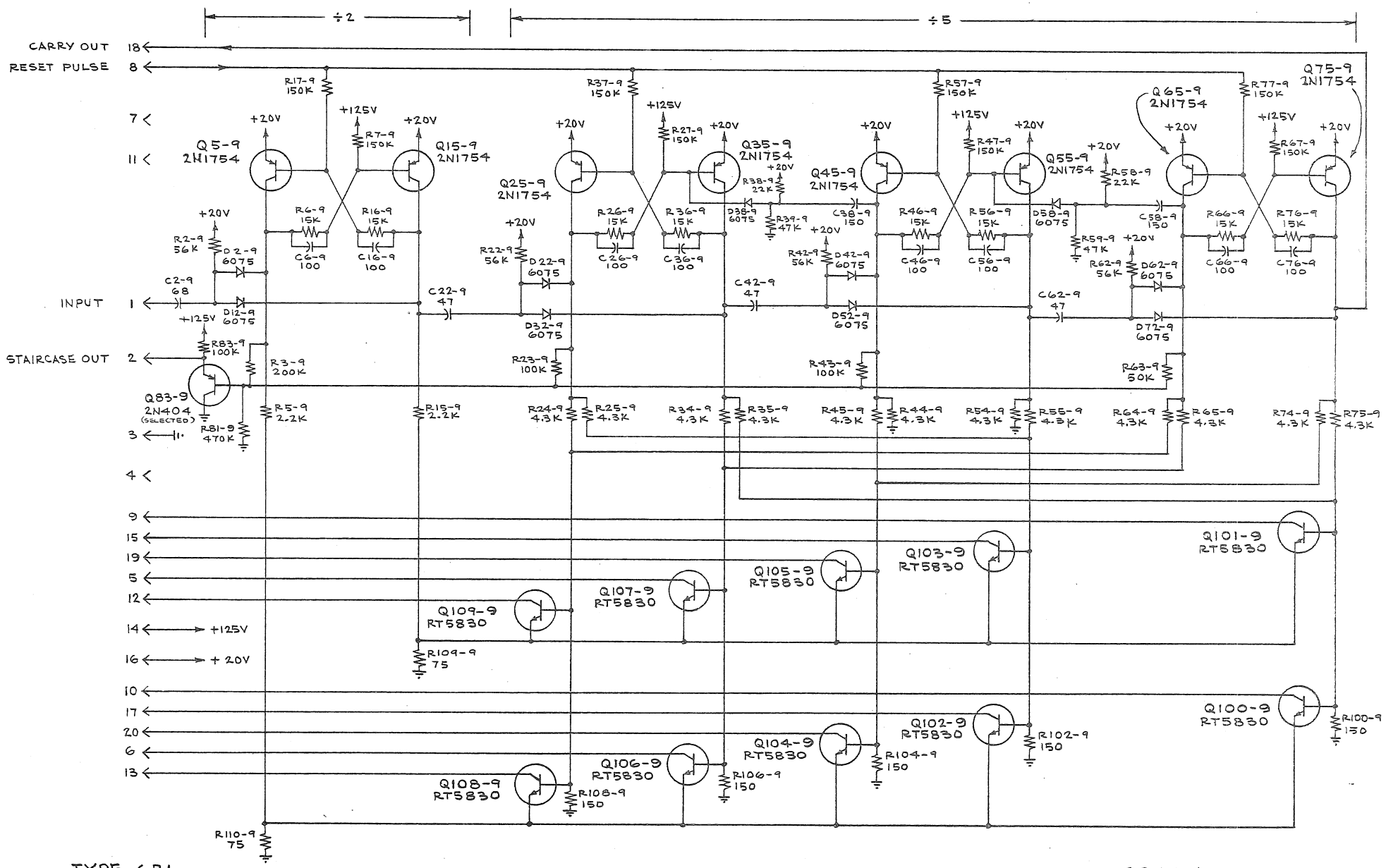

TYPE 6R1

COUNTER

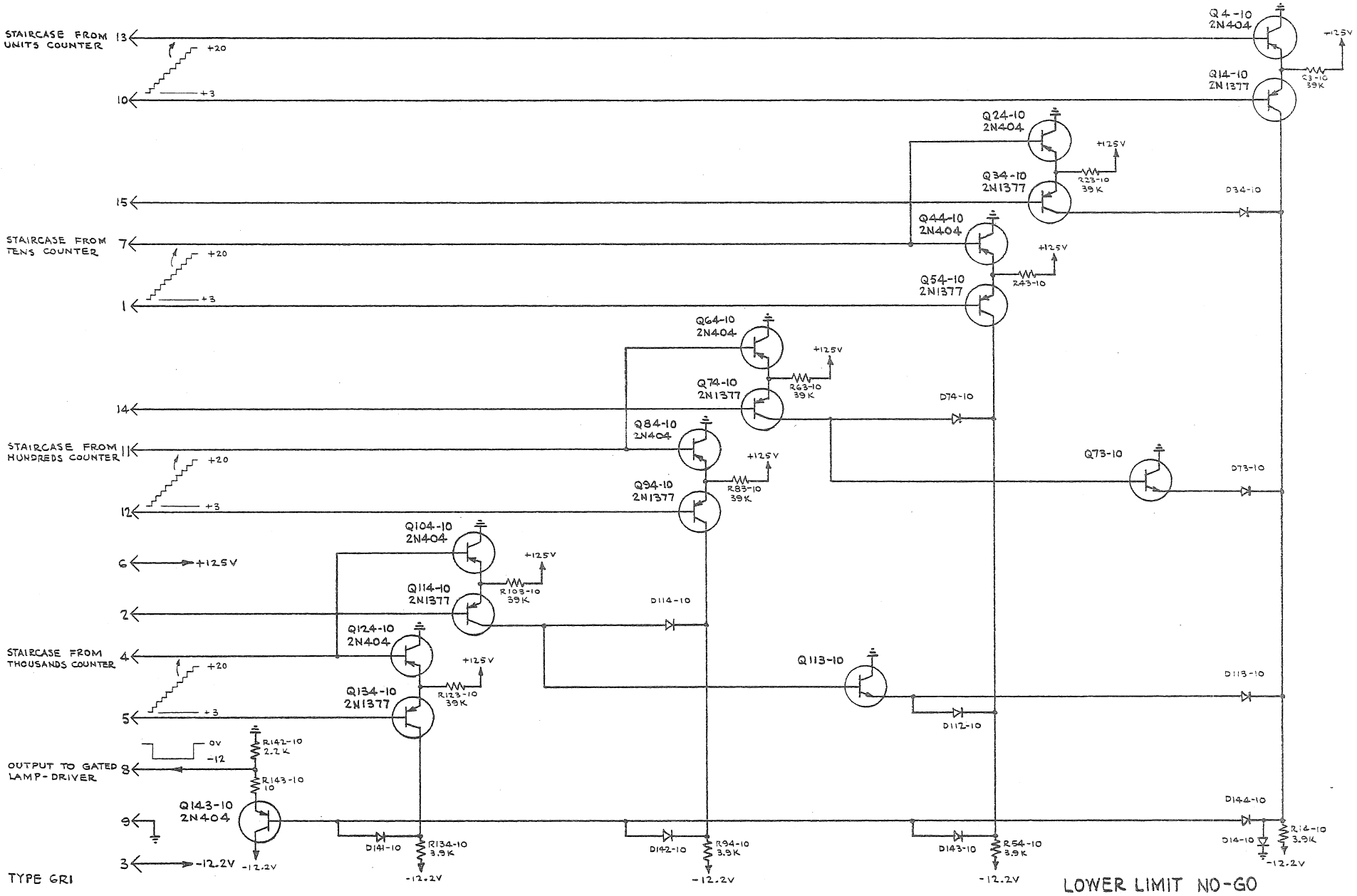
STAIRCASE FROM UNITS COUNTER
STAIRCASE FROM TENS COUNTER
STAIRCASE FROM HUNDREDS COUNTER
STAIRCASE FROM THOUSANDS COUNTER
OUTPUT TO GATED LAMP-DRIVER
+20
+3
0V
-12
+125V
-12.2V
Q4-10 2N404
Q14-10 2N1377
R3-10 39K
Q24-10 2N404
Q34-10 2N1377
R23-10 39K
D34-10
Q44-10 2N404
Q54-10 2N1377
R43-10
Q64-10 2N404
Q74-10 2N1377
R63-10 39K
D74-10
Q84-10 2N404
Q94-10 2N1377
R83-10 39K
Q73-10
D73-10
Q104-10 2N404
Q114-10 2N1377
R103-10 39K
D114-10
Q124-10 2N404
Q134-10 2N1377
R123-10 39K
Q113-10
D113-10
D112-10
R142-10 2.2K
R143-10 10
Q143-10 2N404
D141-10
R134-10 3.9K
D142-10
R94-10 3.9K
D143-10
R54-10 3.9K
D144-10
D14-10
R14-10 3.9K
TYPE GRI
LOWER LIMIT NO-GO

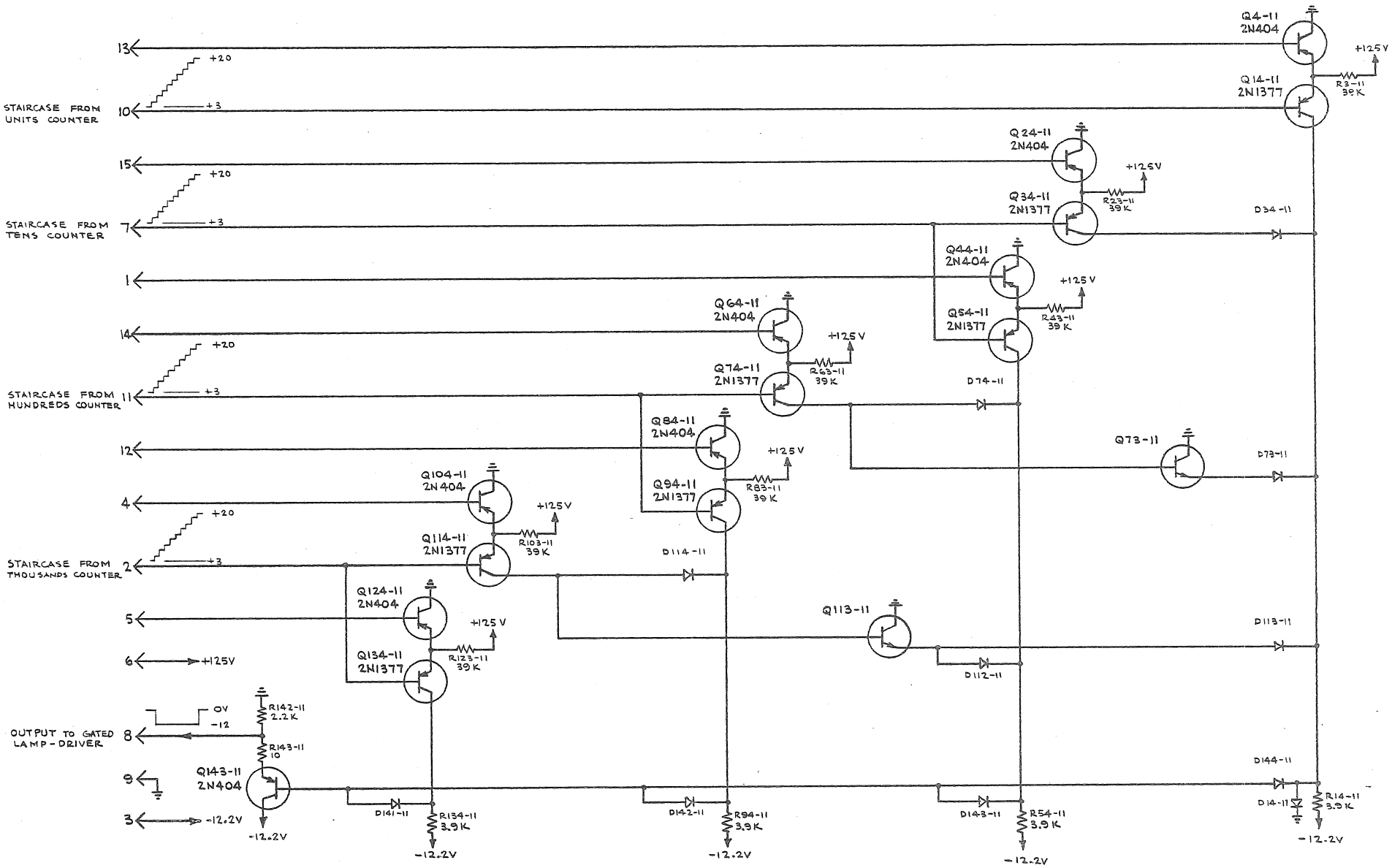

TYPE GR1

UPPER LIMIT NO-GO

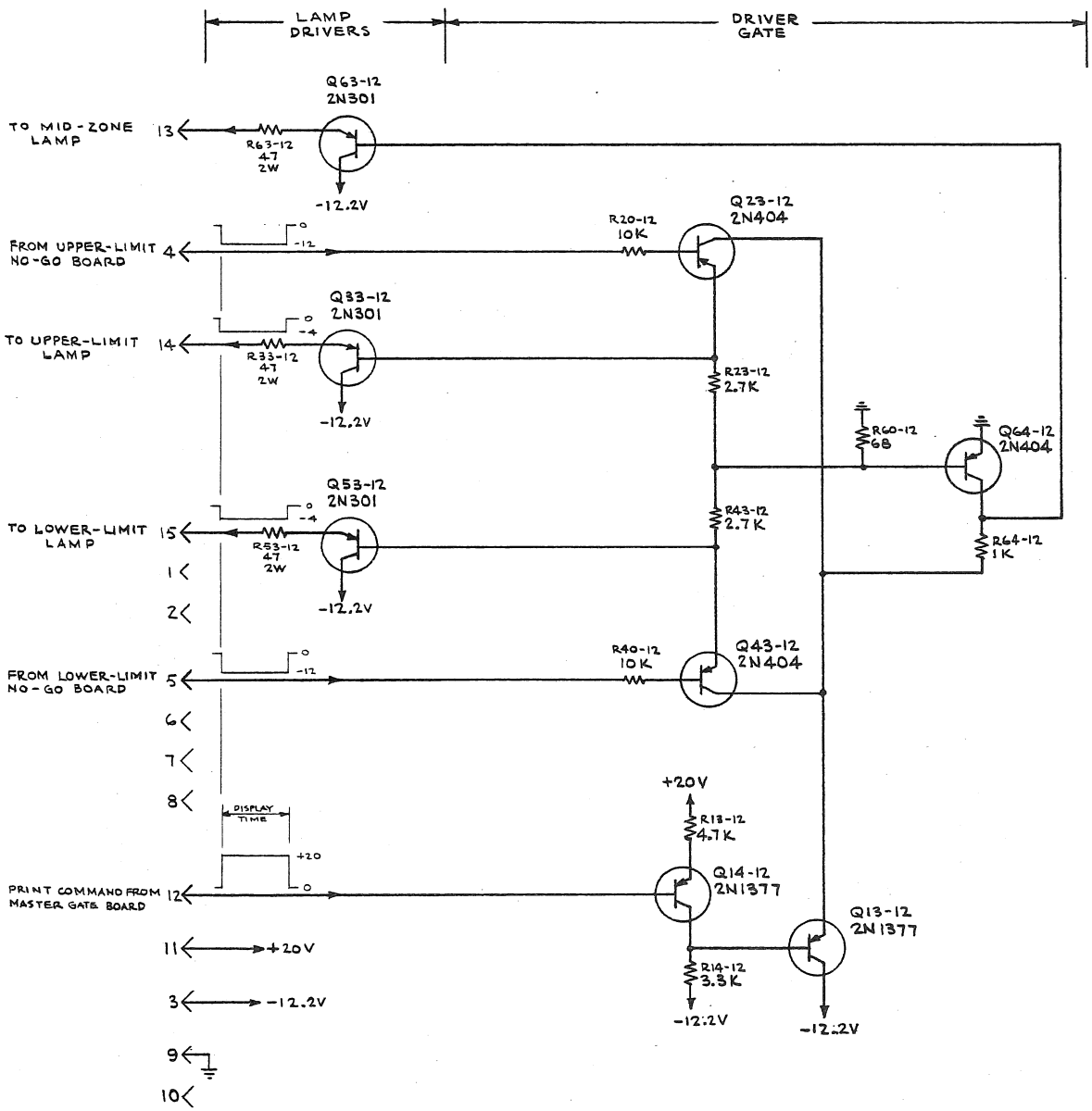

TYPE 6R1

LIMIT LIGHT DRIVER