TELEQUIPMENT

VERTICAL MODULE

TYPE V3

Illustrated above is the registered trade mark
of the TELEQUIPMENT division of TEKTRONIX U.K. Ltd.

Tektronix U.K. Ltd.
313 Chase Road,
Southgate,
London, N14 6JJ,
England.

Telephone: 01-882-1166

Telex: 262004

Cables: TELEQUIPT LONDON N.14

TEKTRONIX, INC.,
P.O. Box 500,
Beaverton,
Oregon (97005).

Telephone: (503) 644-0161

Telex: 36-0485

Cables: TEKTRONIX.

070-1428-00

Issue 2 (1008)

MARCH, 1973

INTRODUCTION

The V3, a single channel, high gain, differential module, provides the parent unit with a high sensitivity vertical facility with up to 100,000 : 1 common mode rejection ratio and maximum bandwidth of 2 MHz.

This manual should be read in conjunction with those manuals mentioned below. References are annotated "PU" and "S" for the parent unit and sweep module respectively.

The design of this instrument is subject to continuous development and improvement, consequently this instrument may incorporate minor changes in detail from the information contained herein, which would, in the main affect the Component List and Circuit Diagrams. The reader should pay particular attention to the notes at the beginning of Chapter 5.

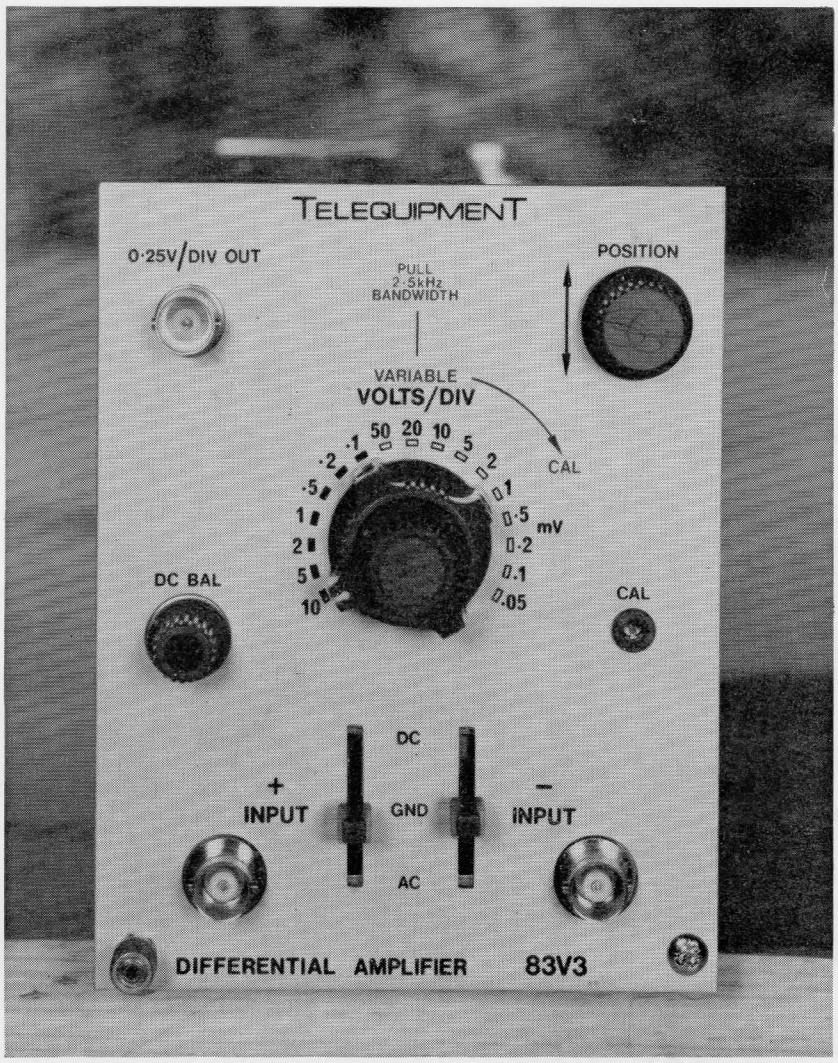

NOTICE TO OWNER

In the event of this Instrument being returned to TELEQUIPMENT for servicing, do NOT send the following items unless they are suspect, in order to prevent damage during transit and facilitate packaging

Manual
Probes

CONTENTS

CHAPTER 1
SPECIFICATIONS

1.1 VERTICAL SYSTEM

1.1.1 Deflection Sensitivity

Calibrated (17 ranges 1-2-5 steps)	50 μV/div — 10 V/div ±3%
Uncalibrated (with variable) ...	deflection factor increased X3

1.1.2 Bandwidth and Risetime

Deflection factor	−3 dB Bandwidth Min. D.C. or 2 Hz to	Risetime Max. (10% — 90%)
0·05 mV/div	150 kHz	2·4 μs
0·1 mV/div	300 kHz	1·2 μs
0·2 mV/div	600 kHz	0·60 μs
0·5 mV/div	1·2 MHz	0·30 μs
1 mV/div	1·6 MHz	0·22 μs
2 mV/div — 10 V/div	2 MHz	0·18 μs

Bandwidth limited to about 2·5 kHz on all VOLTS/DIV ranges by operation of pull switch associated with VARIABLE control.

1.1.3 Common-Mode Rejection Ratio (minimum)

Range	CMRR.	
	DC to 5 kHz	5 kHz to 100 kHz
0·05 to 0·5 mV	100,000	10,000
1 and 2 mV	50,000	5,000
5 and 10 mV	20,000	2,000
20 mV to 10 V	1,000	200

When the input is AC-coupled, CMRR at 50 and 60 Hz is reduced to 1000 on ranges 0·05 to 10 mV and to 500 on ranges 20 mV to 10 V.

1.1.4 Common-Mode Input Voltage Limits

V/DIV	Peak V
0·05 to 10 mV	±12 V
20 mV to 0·1 V	±120 V
0·2 V to 10 V	±400 V

Reduced to ±12 V on ranges 0·05 mV to 1 V/div when the high common-mode input resistance condition is selected.

1.1.5 Input Impedance.

Normally 1 MΩ ±1% in parallel with 40 pF max. at each input.

When the two-pin plug is removed from the attenuator board, the common-mode input resistance on ranges 0·5 mV to 1 V/div is increased to at least 100 MΩ, the differential input resistance remaining at 2 MΩ ±1%. The input resistance on range 2, 5 and 10 V/div is unchanged by removal of the plug.

1.1.6 Output ... ... 0·25 V/DIV, direct coupled.

CHAPTER 2
OPERATING INSTRUCTIONS

2.1 FUNCTION OF CONTROLS AND CONNECTORS

These are situated on the front panel except where otherwise specified. For those controls not covered below, reference should be made to Chapter 2, of the manuals for the parent unit and "S" module.

2.1.1 **CRT** "PU" Manual.

2.1.2 **SWEEP** "S" Manual.

2.1.3 **TRIGGER** "S" Manual.

2.1.4 **CONTROLS**

VOLTS/DIV	provides seventeen steps of attenuation of input signal. Calibrated sensitivities are only valid when **VARIABLE** is fully clockwise.
VARIABLE	enables all deflection sensitivities between that selected by the VOLTS/DIV switch and the next below to be covered. The control must be fully clockwise for a calibrated display. Pull for 2·5 kHz Bandwidth. Restricts bandwidth, thus reducing displayed noise and improving internal trigger.
DC-GND-AC	moves the trace in the coupling. In the DC position, the signal from the INPUT connector is coupled directly to the attenuator. In the AC position a capacitor is inserted in series. In the GND position the input to the attenuator is grounded and the input socket is disconnected. Where only one input socket is in use, the input switch associated with the unused socket should be set to GND. When DC BAL is being adjusted or when the zero level of the signal is to be ascertained, both switches should be set to GND.
POSITION	moves the trace in the vertical axis.
CAL	a preset; adjusted to correct the sensitivity of the VOLTS/DIV. **NOTE:** VARIABLE should be fully clockwise.
DC BAL	adjusted to eliminate trace movement when the VOLTS / DIV control is turned through its range.

2.1.5 **CONNECTORS**

INPUTS

±INPUT	A positive voltage applied to the + socket deflects the trace upwards; a similar signal applied to the − socket gives a downward deflection. Coupling selection refer to DC-GND-AC (para. 2.1.4). A differential signal is connected to both INPUTS. DC-GND-AC set the same.

OUTPUT

0·25 V/div Out	A BNC socket, providing a direct-coupled output signal of about 0·25 V per displayed division.
GND	this is connected to the chassis of the instrument.
INTERFACE	an edge connector situated at the rear of the module; connects with the mother board in the parent unit.

2.2 PRE-OPERATIONAL CHECK

2.2.1 **POWER SUPPLY** Refer to "PU" Manual.

2.2.2 **CONTROL SETTING**

1. CRT. Refer to "PU" Manual.
2. "S" Module. Refer to "S" Manual.
3. Set controls as follows:

POSITION	CENTRAL
VOLTS/DIV	5 mV
VARIABLE	Fully clockwise
DC-GND-AC	DC
INPUT CONNECTION	+ INPUT

2.3 OPERATION

Refer to "PU" Manual.

CHAPTER 3
CIRCUIT DESCRIPTION

3.1 Differential amplifier type V3 is a three-stage amplifier, providing a calibrated current output to the display unit vertical amplifier. An additional amplifying stage provides a ground-level output at a front panel BNC socket. Fig. 1 shows the input coupling circuitry and the circuitry associated with the VOLTS/DIV switch; Fig. 2 shows the circuitry of the remainder of the amplifier.

3.2 S902 is the + INPUT coupling switch. It allows the + INPUT to be connected directly to the + INPUT socket, or via a 100 nF D.C. — blocking capacitor C901, or to be grounded when not in use. S903 gives similar control to the — INPUT. On the eight VOLTS/DIV position 0·05 to 10 mV, signals connected to both + and — INPUT sockets are connected directly to the amplifier input without attenuation. Adjustment of C906 allows the input capacitance of the — INPUT to be made equal to that of the + INPUT on these VOLTS/DIV positions. On the 0·05 mV/DIV position the amplifier operates at maximum gain. On the 0·1 to 10 mV/DIV positions, the gain of the amplifier input stage is progressively reduced by connecting resistors R918 to R925 between the collectors of TR605 and TR606. C924 and C925 maintain constant bandwidth on all positions from 2 mV to 10 V/DIV. On the 20, 50 mV and 0·1 V/DIV positions, a capacity compensated attenuator reduces the amplitude of each input signal by a factor of 10 before it appears at the amplifier input. Amplifier gain on these positions is arranged to be the same as on the 2, 5 and 10 mV/DIV positions, by selecting appropriate resistors in the R918 to R925 group. R901, R907, R908 and associated capacitors provide the ten-times attenuation for the + INPUT; R906, R916 and associated capacitors attenuate the — input signal by the same factor. Adjustment of R908 allows the attenuation of the low-frequency components of the two input signals to be equalized so that the low-frequency common mode response of the amplifier is minimized. C916 is adjusted to make the attenuation of the — input signal the same at all frequencies within the range of the amplifier. Adjustment of C911 allows the high-frequency attenuation of the + input signal to be made equal to that of the — input signal, so that the high-frequency common-mode response of the amplifier is minimized. C903 and C909 are adjusted to make the input capacitance of both inputs the same on all positions from 0·05 mV to 0·1 V/DIV. On positions 0·2, 0·5 and 1 V/DIV each input is attenuated by a factor of 100 and on positions 2, 5 and 10 V/DIV by a factor of 1000. The ÷100 and ÷1000 attenuator sections are similar in operation and adjustment to the ÷10 sections described above.

3.3 When plug PL901 is removed from its socket SK905, the common line of the ÷10 and ÷100 attenuator sections and the common point of input resistors R601 and R602 (Fig. 2) are disconnected from chassis potential. This increases the common-mode input resistance to about 100 MΩ on all ranges except 2, 5 and 10 V/DIV. If either or both input switches are set to GND, removal of PL901 is ineffective.

3.4 D601 and D602 supply a small current to the + INPUT, which is adjusted by means of R607 to compensate for the reverse leakage of D607, D609 and the gate leakage of TR601A. D607 and D609 are low-leakage diodes whose function is to protect the input FET, TR601, if a large input voltage is applied to the + INPUT. As soon as the input voltage reaches + 21 V, D607 and D605 conduct and the gate voltage is prevented from exceeding this value. If a large negative voltage is applied, D609 and D606 conduct. If the excess voltage is large enough and the signal source can supply sufficient current, fuse FS601 will blow, isolating the input FET. D603 and D604 provide leakage current compensation to the — INPUT. D608, D611 and FS602 protect TR601B from large input voltages.

3.5 The input stage consists of TR601 A and B, TR605 and TR606 connected as a cascode long-tailed pair providing a maximum gain of about 130; TR602, TR603, TR604 which serve to improve the common-mode rejection of the stage and provide a neutralization signal. TR602 maintains the total source current of TR601 constant. This current is adjusted by R618 to give the required mean D.C. voltage at the collectors of TR605 and TR606. TR603 and TR604 are cascaded emitter followers which, in conjunction with D613, ensure that the common-mode signal appearing at the sources of TR601 is accurately reproduced at the bases of TR605 and TR606. Connecting the positive end of R621 to the positive end of D613 maintains constant emitter current in TR603, so that the high differential resistance of the source circuit is not significantly degraded. R619 is adjusted for maximum differential resistance at the collector of TR602, C608 is adjusted for zero effective capacitance at this point. R624 provides an amplified and inverted version of the common-mode signal, suitable for neutralizing unwanted signals at the gates of TR601. These unwanted signals, coupled to the gates by stray capacitance both inside and outside TR601, are cancelled by the correct adjustment of C603 and C604. R614, R615 and R616 provide sufficient negative feedback to stabilize the gain of the stage. R616 is a coarse D.C. balance control, which compensates for differences between TR601A and B. R631, the front panel D.C. BAL control, is used to compensate variations in TR601 balance occurring during operation. C612 is adjusted to equalize the capacitance between base and collector of TR605 and TR606, thus decreasing the high frequency common-mode response of the stage. As described earlier in this section, the gain of the stage is varied as required at any particular setting of the VOLTS/DIV control by selecting the resistance connected between the collectors of TR605 and TR606. (Connexions 134/4 and 134/5.)

3.6 The second stage comprises TR607, TR608, TR609, TR611 and associated components. The gain of the stage is determined by the feedback resistors R641, R642, R645 and R646 as modified by the setting of R643, the front panel VARIABLE control. The negative-feedback in this stage serves to increase the input

resistance of TR607 and TR608, so that loading on the preceding stage is negligible. This is important in maintaining the accuracy of the VOLTS/DIV steps. R649 is adjusted to prevent the trace moving when the VARIABLE control is operated in the absence of a signal. The base of TR611 is a low resistance point and so is a convenient point for mixing in the position-control current, derived from the front panel POSITION control. A current adjustable by means of R627 is also injected at this point, with the purpose of balancing the later stages of the amplifier. With VARIABLE set to CAL, the voltage gain of this stage is 17.

3.7 The signal at the collectors of TR609 and TR611 is connected both to the third stage of the amplifier, TR613 and TR614, and to an auxiliary stage which provides an output at the front panel socket. The transfer-conductance of the third stage is determined by the resistance connected between the emitter of TR613 and TR614. The front panel preset CAL potentiometer, R662 is part of this resistance. R671, R672 and C619 constitutes a low-pass filter, selected by operating a pull switch associated with the VARIABLE control. By limiting the bandwidth, this filter reduces displayed noise and improves triggering at low deflection factors. TR612 defines the D.C. current in TR613 and TR614 as required for the first stage of the vertical amplifier in the display unit.

TR615 and TR616 supply the front-panel output socket. R658 is adjusted to provide zero output voltage when the trace is in the middle of the screen.

CHAPTER 4
MAINTENANCE AND CALIBRATION

4.1.0 GENERAL

4.1.1 This manual should be read in conjunction with the manuals for the parent unit and sweep module in use.

4.1.2 Before it is assumed a fault condition exists, controls setting should be verified with reference to the pre-operational checks, para. 2.2. Where components are replaced it is advised that the calibration check detailed in para. 4.4.0 be carried out.

4.2.0 MECHANICAL

4.2.1 **ACCESS TO INTERIOR**

Withdraw module and remove covers.

4.2.2 **LOCATION OF PRESET CONTROLS**

Attenuator (PC135) is situated on the right, vertical amplifier (PC134) on the left.

4.3.0 CALIBRATION

4.3.1 The following procedure enables a calibration check of the module to be accomplished. It is advised that isolated adjustments are not made, due to risk of interaction with settings made in earlier checks. A functional check be carried out as detailed in para. 4.4 below, checking parameters are met, then proceeding to the next check.

The following tools and facilities will be required:

TOOLS
- Screwdriver
  - Plain 4 mm blade.
  - Low-capacitance.
- Fixture, Exten. Flex 067-0689-00.
- Leads
  - Co-axial c/w BNC plugs.
  - Three-way co-axial splitter (1 BNC socket to 3 BNC plugs).
- Probe X10 c/w earth lead.
- Probe for voltage measurements.

FACILITIES
- Voltage measurement to 30 V.
- Input signals
  - 100 V DC
  - Sinewave
  - Squarewave

Sinewave		Squarewave	
5 V	100 kHz	10 V	1 Hz
10 V	100 kHz	25 mV(1%)	1 kHz
			100 kHz

4.3.2 **INITIAL CONTROL SETTING**

(a) Set both DC-GND-ACs to GND.
(b) Push and turn VARIABLE fully clockwise.
(c) Set DC BAL to mid-range.

Note: Reference should be made to 'PU' and 'S' manuals for the respective control settings.

4.4.0 CALIBRATION

Note: Remove 'V' module and module cover, connect extension lead 067-0689-00 to 'PU.'

4.4.1 **TRANSISTOR TR612 COLLECTOR VOLTAGE.**

1.0 Check TR612 collector voltage.

1.1 Set POSITION to mid-range.
1.2 Set DC BAL to mid-range.
1.3 Set VOLTS/DIV to 10 mV.
1.4 Push and turn VARIABLE fully clockwise.
1.5 Set both DC-GND-AC to GND.
1.6 Measure DC voltage at collector (can) of TR612.
1.7 CHECK reading = +4·5 V.
1.8 Adjust R618. PC134.

4.4.2 **CONTROLS, Front Panel.**

1.0 Check POSITION range symmetry.

1.1 Repeat para. 4.4.1, Ops. 1.2 through 1.5.
1.2 Observe trace is central.
1.3 Adjust R627.

2.0 Check DC BAL range symmetry.

2.1 Repeat para. 4.4.1, Ops. 1.2 through 1.5.
2.2 Set VOLTS/DIV to 1 mV.
2.3 Rotate DC BAL to extremities.
2.4 CHECK trace travel equidistant of centre.
2.5 Adjust R616. PC134.

4.4.3 **TRANSISTOR, TR605 and TR606 MATCHING.**

1.0 Check TR605 and TR606 match.

1.1 Set VOLTS/DIV to 0·05 mV.
1.2 Set both DC-GND-AC to DC.
1.3 Push and turn VARIABLE fully clockwise.
1.4 Link INPUTS.
1.5 Connect 10 V, DC to link (Op. 1.4).
1.6 Observe deflection.
1.7 If deflection >1 division, change either or both transistor, selecting a pair giving a deflection <1 division.
1.8 If a transistor has been changed repeat Ops. 2.1 to 2.4.

4.4.4 **VERTICAL AMPLIFIER**

1.0 Check L.F. CMRR.

1.1 Set VOLTS/DIV to 10 mV.
1.2 Repeat Ops. 1.2 through 1.5 above.
1.3 Observe deflection.
1.4 Adjust R619. PC134 for zero deflection.
1.5 Disconnect link.
1.6 Repeat para. 4.4.2, Op. 2.0.

2.0 Check variable balance.

2.1 Set VOLTS/DIV to 10 mV.
2.2 Set both AC-GND-DC to GND.
2.3 Rotate VARIABLE through range.
2.4 Observe for movement.
2.5 Adjust R649, PC134, to eliminate movement.

3.0 Check gate current compensation.

3.1 Set VOLTS/DIV to 0·05 mV.
3.2 Push and turn VARIABLE fully clockwise.
3.3 Connect both INPUTS to earth.
3.4 NOTE position of trace.
3.5 Set + DC-GND-AC to AC.
3.6 Observe for trace shift.
3.7 Adjust R607, PC134, to eliminate shift.
3.8 Set DC-GND-ACs; + to GND, — to AC.
3.9 Observe for trace shift.
3.10 Adjust R608 to eliminate shift.

4.0 Check calibration and variable function.

4.1 Set VOLTS/DIV to 5 mV.
4.2 Push and turn VARIABLE fully clockwise.
4.3 Connect 25 mV (±1%) 1 kHz squarewave to —INPUT.
4.4 CHECK amplitude=5 div.
4.5 Adjust CAL.
4.6 Turn VARIABLE fully anti-clockwise.
4.7 CHECK amplitude <2·0 div.

5.0 Check 0·25 Volt/Div. Out balance and accuracy.

5.1 Set VOLTS/DIV to 10 mV.
5.2 Push and turn VARIABLE fully clockwise.
5.3 Set both DC-GND-ACs to GND.
5.4 Adjust POSITION to centralize trace.
5.5 Connect Volt Meter between 0·25 V/DIV OUT and chassis.
5.6 Check Meter reading=0.
5.7 Adjust R658, PC134.
5.8 Turn POSITION to move trace vertically 2 div.
5.9 CHECK Meter reading=0·5 V ±0·1 V.

6.0 Check pulse response.

6.1 Connect 100 kHz squarewave via terminator to +INPUT.
6.2 Set VOLTS/DIV to 2 mV.
6.3 Push VARIABLE and turn fully clockwise.
6.4 Observe trace for over and undershoot.
6.5 Adjust C606, PC135, for optimum response.
6.6 Reduce squarewave frequency to 10 kHz.
6.7 Observe response. If necessary adjust C607 and R618.

7.0 Check −input neutralization.

7.1 Connect 1 kHz squarewave to +INPUT.
7.2 Set VOLTS/DIV to 10 mV.
7.3 Push VARIABLE and turn fully clockwise.
7.4 Set both DC-GND-AC to DC.
7.5 Observe trace for over and undershoot.
7.6 Adjust C603, PC135, for optimum response.

8.0 Check +Input neutralization.

8.1 Connect 1 kHz squarewave to −INPUT.
8.2 Repeat Ops. 7.2 through 7.5.
8.3 Adjust C604, PC135, for optimum response:

4.4.5 **ATTENUATOR**

1.0 Check L.F. CMRR.

1.1 Link INPUTS.
1.2 Connect 100 V DC to link (Op. 4.1).
1.3 Set VOLTS/DIV to 20 mV.
1.4 Repeat Ops. 7.3 and 7.4, para. 4.4.4.
1.5 Observe trace deflection <1 division.
1.6 Adjust R913 to minimize deflection.
1.7 Set VOLTS/DIV to 0·2 V.
1.8 Observe trace deflection <0·1 division.
1.9 Adjust R911 to minimize deflection.
1.10 Set VOLTS/DIV to 2 V.
1.11 Adjust R908 to eliminate deflection.

2.0 Check H.F. compensation.

2.1 Link INPUTS.
2.2 Push and turn VARIABLE fully clockwise.
2.3 Set DC-GND-AC to Col. 1 & 2.
2.4 Set VOLTS/DIV to Col. 3.
2.5 Connect signal, Col. 4, to link.
2.6 Observe trace for under or overshoot.
2.7 Adjust Cir. Ref., Col. 5, to minimize under or overshoot.

+INPUT	−INPUT	VOLTS/DIV	SQUAREWAVE 10 kHz	ADJUST
DC	GND	20 mV	100 mV	C913
GND	DC	20 mV	100 mV	C916
GND	DC	0·2 V	1 V	C915
DC	GND	0·2 V	1 V	C912
DC	GND	2 V	10 V	C911
GND	DC	2 V	10 V	C914

3.0 Check H.F. CMRR (amplifier).

3.1 Link INPUTS.
3.2 Connect 5 V 100 kHz sinewave to link.
3.3 Repeat Ops. 7.3 and 7.4, para. 4.4.4.
3.4 Set VOLTS/DIV to 0·05 mV.
3.5 Observe trace deflection <8 div.
3.6 Adjust C612 to minimize deflection.
3.7 Set VOLTS/DIV to 10 mV.
3.8 Observe trace deflection <0·2 div.
3.9 Adjust C608 to minimize deflection.
3.10 Repeat Ops. 3.3 through 3.8 above.

4.0 Check H.F. CMRR (Attenuator).

4.1 Link INPUTS.
4.2 Connect 10 V 100 kHz sinewave to link.
4.3 Repeat Ops. 7.3 and 7.4, para. 4.4.4.
4.4 Set VOLTS/DIV to Col. 1 below.
4.5 Observe trace deflection <, Col. 2.
4.6 Adjust Cir. Ref., Col. 3, to minimize Col. 2.

1	2	3
VOLTS/DIV	Deflection (div) Permissible	Adjust
20 mV	2	C913
50 mV	0·8	C913
0·1 V	0·1	C913
0·2 V	0·2	C912
2 V	NIL	C911

5.0 Check Input capacitance.

5.1 Connect 1 kHz squarewave to +INPUT via X10 probe.
5.2 Set VOLTS/DIV to 10 mV.
5.3 Push and turn VARIABLE fully clockwise.
5.4 Set DC-GND-ACs; + to DC, − to GND.
5.5 Observe trace for under and overshoot.
5.6 Adjust probe to minimize under or overshoot. (Refer to probe leaflet.)
5.7 Set VOLTS/DIV to Col. 1 below.
5.8 Observe trace for under and overshoot.
5.9 Adjust Cir. Ref. Col. 2 to minimize under or overshoot.

1	2
VOLTS/DIV	Adjust
20 mV	C905
0·2 V	C904
2 V	C903

5.10 Connect probe (Op. 5.1) to −INPUT.
5.11 Set DC-GND-ACs; + to GND, − to DC.
5.12 Repeat Ops. 5.7 to 5.9 referring to table below.

1	2
VOLTS/DIV	Adjust
10 mV	C906
20 mV	C909
0·2 V	C908
2 V	C907

6.0 Check Bandwidth.

6.1 Set VOLTS/DIV to Col. 1.
6.2 Connect Col. 2 signal to +INPUT.
6.3 Adjust Signal Generator to give 6 div amplitude.
6.4 Adjust Signal Generator to give Col. 3 signal.
6.5 Check amplitude >4·2 divisions.

Col. 1 VOLTS/DIV	Col. 2 Sinewave Signal kHz	Col. 3 Sinewave Signal Hz
0·05 mV	1	150 k
0·1 mV	1	300 k
0·2 mV	1	600 k
0·5 mV	50	1·2 M
1·0 mV	50	1·6 M
2 mV - 10 V	50	2·0 M

	−INPUT		+INPUT		GAIN SWITCHING
	ATTENUATION				
SWITCH POSITION	**SELECTED BY WAFER 1F and R** EYELET No.:	**SELECTED BY WAFER 2F and R** EYELET No.:	**SELECTED BY WAFER 3F and R** EYELET No.:	**SELECTED BY WAFER 4F and R** EYELET No.:	**SELECTED BY WAFERS 5 and 6**
10 V	135/11	135/8	135/5	135/1	R918, R919, R921, R922, R923, R924, R925, C924, C925
5 V	135/11	135/8	135/5	135/1	R918, R919, R921, R922, R923, R925, C925
2 V	135/11	135/8	135/5	135/1	R918, R919, R921, R922, R923
1 V	135/12	135/9	135/6	135/2	R918, R919, R921, R922, R923, R924 R925, C924, C925
0·5 V	135/12	135/9	135/6	135/2	R918, R919, R921, R922, R923, R925, C925
0·2 V	135/12	135/9	135/6	135/2	R918, R919, R921, R922, R923
0·1 V	135/13	135/10	135/7	135/3	R918, R919, R921, R922, R923, R924 R925, C924, C925
50 mV	135/13	135/10	135/7	135/3	R918, R919, R921, R922, R923, R925, C925
20 mV	135/13	135/10	135/7	135/3	R918, R919, R921, R922, R923
10 mV	—	—	—	—	R918, R919, R921, R922, R923, R924, R925, C924, C925
5 mV	—	—	—	—	R918, R919, R921, R922, R923, R925, C925
2 mV	—	—	—	—	R918, R919, R921, R922, R923
1 mV	—	—	—	—	R918, R919, R922, R923
0·5 mV	—	—	—	—	R918, R922, R923
0·2 mV	—	—	—	—	R922, R923
0·1 mV	—	—	—	—	R923
0·05 mV	—	—	—	—	—

TABLE — VOLTS/DIV SWITCH CONNEXIONS

CHAPTER 5
COMPONENTS LIST

Values of resistors are stated in ohms or multiples of ohms; ratings at 70°C are in watts or sub-multiples of watts. Values of capacitors are stated in sub-multiples of farads; ratings at 70°C are in volts or kilovolts.

Whenever possible, exact replacements for components should be used, although locally available alternative may be satisfactory for standard components.

Any order for replacement parts should include:

1. Instrument type
2. Instrument serial number
3. Component circuit reference
4. Component part number
5. Component Value

CIRCUIT REFERENCE BLOCKS

The table below gives the blocks of circuit references, so that the reader can relate the items listed in this chapter and their location in the circuitry and printed circuit boards in Chapter 6.

Circuit Reference		Circuit	Fig.	P.C. Board No.
From	To			
601	700	Differential Amplifier	2	134
900	950	Volts/Div Switch	1	135

ABBREVIATIONS

BM	Button mica	CMP	Cermet preset	PS	Polystyrene
C	Carbon	E	Electrolytic	Se	Selenium
CP	Carbon preset	Ge	Germanium	Si	Silicon
CV	Carbon variable	MF	Metal film	SM	Silver mica
CER	Ceramic	MO	Metal oxide	WW	Wire-wound
CT	Ceramic trimmer	PE	Polyester	WWP	Wire-wound preset
CM	Cermet thick film	PP	Polypropylene	WWV	Wire-wound variable

TELEQUIPMENT, division of TEKTRONIX U.K. LIMITED

313 Chase Road Southgate London N14 6JJ England

Telephone: 01-882 1166 Telex: 262004 Cables: TELEQUIPT LONDON N14

All requests for repairs or replacement parts should be directed to the Tektronix Field Office or representative in your area. This procedure will assure you the fastest possible service.

Cir Ref	Part Number	Description Value F	Type	Tol %	Rating V
C601	281-0710-00	10 n	CER		250
C602	281-0710-00	10 n	CER		250
C603	281-0156-00	1·4-6·4 p	PP		500
C604	281-0156-00	1·4-6·4 p	PP		500
C605	285-1054-00	270 p	PS	1	350
C606	281-0157-00	5·5-65·5 p	PP		500
C607	281-0154-00	2-12 p	PP		500
C608	281-0154-00	2-12 p	PP		500
C609	283-0662-00	7·5 p	SM	0·5 p	350
C610	281-0710-00	10 n	CER		250
C611	285-0915-00	100 n	PE	20	100
C612	281-0156-00	1·4-6·4 p	PP		500
C613	281-0711-00	3·9 p	CER		750
C614	281-0710-00	10 n	CER		250
C615	281-0710-00	10 n	CER		250
C616	281-0710-00	10 n	CER		250
C617	285-1014-00	1 μ	PE	20	63
C618	285-1034-00	1 μ	PE	20	100
C619	285-0915-00	100 n	PE	20	100

Cir Ref	Part Number	Description Value F	Type	Tol %	Rating V
C901 †C902	285-1019-00	100 n	PE	10	400
C903	281-0155-00	2-22 p	PP		500
C904	281-0155-00	2-22 p	PP		500
C905	281-0155-00	2-22 p	PP		500
C906	281-0154-00	2-12 p	PP		500
C907	281-0155-00	2-22 p	PP		500
C908	281-0155-00	2-22 p	PP		500
C909	281-0155-00	2-22 p	PP		500
C911	281-0156-00	1·4-6·4 p	PP		500
C912	281-0156-00	1·4-6·4 p	PP		500
C913	281-0156-00	1·4-6·4 p	PP		500
C914	281-0156-00	1·4-6·4 p	PP		500
C915	281-0156-00	1·4-6·4 p	PP		500
C916	281-0156-00	1·4-6·4 p	PP		500
C917	285-0886-00	4·7 n	PE	20	100
C918	285-0874-00	470 p	PS	5	125
C919	285-0867-00	20 p	PS	1 p	350
C921	285-0886-00	4·7 n	PE	20	100
C922	285-0874-00	470 p	PS	5	125
C923	285-0867-00	20 p	PS	1 p	350
C924	285-1018-00	22 p	PS	1 p	350
C925	285-0940-00	12 p	PS	1 p	350

†Matched pair

Cir Ref	Part Number	Value V	Description	Type	Tol %	Rating
D601	152-0062-01		1N914/1N4148	Si		75 V
D602	152-0062-01		1N914/1N4148	Si		75 V
D603	152-0062-01		1N914/1N4148	Si		75 V
D604	152-0062-01		1N914/1N4148	Si		75 V
D605	152-0410-00	20	Zener	Si	5	330 mW
D606	152-0410-00	20	Zener	Si	5	330 mW
D607	152-0324-00		Tektronix spec.	Si		50 V
D608	152-0324-00		Tektronix spec.	Si		50 V
D609	152-0324-00		Tektronix spec.	Si		50 V
D611	152-0324-00		Tektronix spec.	Si		50 V
D612	152-0347-00	7·5	Zener	Si	5	330 mW
D613	152-0545-00	10	Zener	Si	5	330 mW
D614	152-0511-00	51	Zener	Si	5	700 mW

Cir Ref	Part Number	Description	Rating
FB	276-0597-00	Ferrite bead Mullard FX1115	
FS601	159-0108-00	Fuse	60 mA
FS602	159-0108-00	Fuse	60 mA

Cir Ref	Part Number	Description Value ohms	Type	Tol %	Rating W
R601	321-0481-48	1 M	MF	1	125 m
R602	321-0481-48	1 M	MF	1	125 m
R603	315-0207-01	200 M	C	+100 −0	250 m
R604	315-0207-01	200 M	C	+100 −0	250 m
R605	307-0186-00	22 M	C	20	250 m
R606	307-0186-00	22 M	C	20	250 m
R607	311-0765-00	100 k	CP	20	250 m
R608	311-0765-00	100 k	CP	20	250 m
R609	315-0472-02	4·7 k	C	5	250 m
R610	315-0472-02	4·7 k	C	5	250 m
R611	315-0123-02	12 k	C	5	250 m
R612	315-0123-02	12 k	C	5	250 m
R613	311-1069-00	150 k	CP	20	250 m
R614	321-0126-48	200	MF	1	125 m
R615	321-0126-48	200	MF	1	125 m
R616	311-1379-00	47	WWP	10	1
R617	315-0302-02	3 k	C	5	250 m
R618	311-0851-00	1 k	CP	20	250 m
R619	311-1380-00	2·2 M	CP	20	250 m
R620	317-0105-01	1 M	C	5	125 m
R621	315-0103-01	10 k	C	5	250 m
R622	316-0474-01	470 k	C	10	250 m
R623	316-0102-01	1 k	C	10	250 m
R624	301-0153-01	15 k	C	5	500 m
R625	315-0822-02	8·2 k	C	5	250 m
R626	315-0333-02	33 k	C	5	250 m
R627	311-0765-00	100 k	CP	20	250 m
R628	321-0356-42	49·9 k	MF	0·5	125 m
R629	321-0356-42	49·9 k	MF	0·5	125 m
R630	316-0334-01	330 k	C	10	250 m
R631	311-1360-00	220	CV	20	250 m
R632	316-0101-01	100	C	10	250 m
R633	316-0101-01	100	C	10	250 m
R634	311-1357-00	100 k	CV	20	250 m
R635	316-0224-01	220 k	C	10	250 m
R636	316-0394-01	390 k	C	10	250 m
R637	315-0334-01	390 k	C	10	250 m
R638	321-1392-48	120 k	MF	1	125 m
R639	315-0393-02	39 k	C	5	250 m
R640	315-0393-02	39 k	C	5	250 m
R641	321-0844-48	2·2 k	MF	1	125 m
R642	321-0844-48	2·2 k	MF	1	125 m
R643	311-1490-00	10 k	CV	20	125 m
R644	321-1392-48	120 k	MF	1	125 m
R645	321-0874-48	39 k	MF	1	125 m
R646	321-0874-48	39 k	MF	1	125 m
R647	321-0373-48	75 k	MF	1	125 m
R648	321-0373-48	75 k	MF	1	125 m
R649	311-0802-00	4·7 k	CP	20	250 m
R651	316-0683-01	68 k	C	10	250 m

Cir Ref	Part Number	Description Value ohms	Type	Tol %	Rating W	
R652	316-0683-01	68 k	C	10	250 m	
R653	321-0220-48	1·91 k	MF	1	125 m	
R654	315-0122-02	1·2 k	C	5	250 m	
R655	315-0122-02	1·2 k	C	5	250 m	
R656	315-0332-01	3·3 k	C	5	250 m	
R657	315-0332-01	3·3 k	C	5	250 m	
R658	311-0995-00	680	CP	20	250 m	(99.
R659	317-0131-01	130	C	5	125 m	(100
R661	317-0131-01	130	C	5	125 m	(100
R662	311-1574-00	470	CV	20	250 m	(100
R663	315-0622-02	6·2 k	C	5	250 m	
R664	315-0471-01	470	C	5	250 m	
R665	315-0122-02	1·2 k	C	5	250 m	
R666	316-0101-01	100	C	10	250 m	
R667	301-0272-01	2·7 k	C	5	500 m	
R668	316-0101-01	100	C	10	250 m	
R671	315-0221-02	220	C	5	250 m	
R672	315-0221-02	220	C	5	250 m	
R901	321-0481-42	1 M	MF	0·5	125 m	
R902	325-0124-00	990 k	MF	0·5	125 m	
R903	325-0125-00	900 k	MF	0·5	125 m	
R904	321-0481-42	1 M	MF	0·5	125 m	
R905	325-0124-00	990 k	MF	0·5	125 m	
R906	325-0125-00	900 k	MF	0·5	125 m	
R907	321-0192-42	976	MF	0·5	125 m	
R908	311-1382-00	68	WWP	10	1	
R909	321-0971-42	9·88 k	MF	0·5	125 m	
R911	311-1381-00	680	WWP	10	1	
R912	321-0388-42	107 k	MF	0·5	125 m	
R913	311-1383-00	10 k	WWP	10	1	
R914	321-0193-42	1 k	MF	0·5	125 m	
R915	321-1289-42	10·1 k	MF	0·5	125 m	
R916	321-1389-42	111 k	MF	0·5	125 m	
R918	321-1310-42	16·7 k	MF	0·5	125 m	
R919	321-0289-42	10 k	MF	0·5	125 m	
R921	321-0260-42	4·99 k	MF	0·5	125 m	
R922	321-0356-42	49·9 k	MF	0·5	125 m	
R923	321-0385-42	100 k	MF	0·5	125 m	
R924	321-0193-42	1 k	MF	0·5	125 m	
R925	321-0972-42	1·67 k	MF	0·5	125 m	

*With S601

Cir Ref	Part Number	Value
S601	311-1490-00	Pull (with R643)
S901	260-1413-00	Rotary (17-position)
S902	260-1271-00	Lever (3-position)
S903	260-1271-00	Lever (3-position)
SK905	136-0295-00	Socket

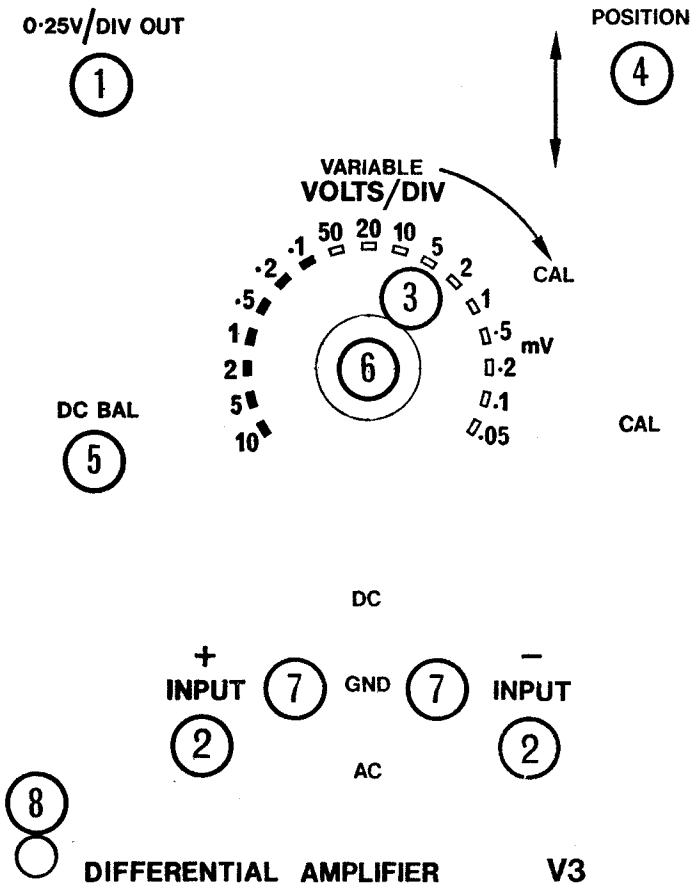

FRONT PANEL

MECHANICAL

	Part Number	Description	Location
	136-0235-00	Base Transistor, 6 Contact	PCB
	136-0317-00	Base Transistor, T05	PCB
(970)	136-0183-00	Base Transistor	TR604
	136-0243-00	Base Transistor, T018	PCB
	344-0247-00	Clip, Fuse	PC134
	131-0650-01	Connector, Bulkhead Socket	1
	131-0649-00	Connector, Male BNC	Accessory
	131-0651-01	Connector Panel Jack BNC	2
	210-0735-00	Eyelet, L.613	PCB
	210-0739-00	Eyelet, L.737	PCB
	003-0674-00	Key, Allen, 1·5 A/F	3-7
	366-1241-00	Knob, Grey	3
	366-1239-00	Knob, Grey/Black	4
	366-1266-00	Knob, Grey/Black	5
	366-1240-00	Knob, Red/Black	6
	366-0214-03	Knob, Lever	7
	220-0527-00	Nut, Chrome	3-7
	220-0647-00	Nut, Terminal	8
	004-1143-00	Packaging	Accessory
	134-0100-00	Plug, 2 pole	
	129-0374-00	Post, Terminal	8
	213-0248-00	Screw, Socket, 3 x 3 mm	3-7
	136-0295-00	Socket, R.557	PC135
	105-0346-00	Stop	Rear of Mod.
	210-0275-00	Tag, Solder, ⅜" id.	

CHAPTER 6

CIRCUIT DIAGRAMS

To minimize the risk of misinterpretation of component values on circuit diagrams, the decimal point has been replaced by the multiplier or sub-multiplier of the basic unit. For instance, 2·2 megohms is shown as 2M2 and 1·8 picofarads is shown as 1p8.

To aid the reader further, in addition to the block Circuit Reference Table in Chapter 5.1, to locate a component in the circuit diagrams, a table is provided at the top of each circuit diagram, in which the circuit reference will appear, where practicable, directly above the component being sought.

PRINTED CIRCUIT

Blue shows the rear track as seen through the board. Yellow the component side track.

RESISTORS	901 902 903 904 905 906 907 908 909 911 912 913 914 915 916
CAPACITORS	901 902 903 904 905 906 907 908 909 911 912 913 914 915 916 917 918 919 921 922 923
MISC.	S902 S903 S901 SK903 SK904 SK905 PL901

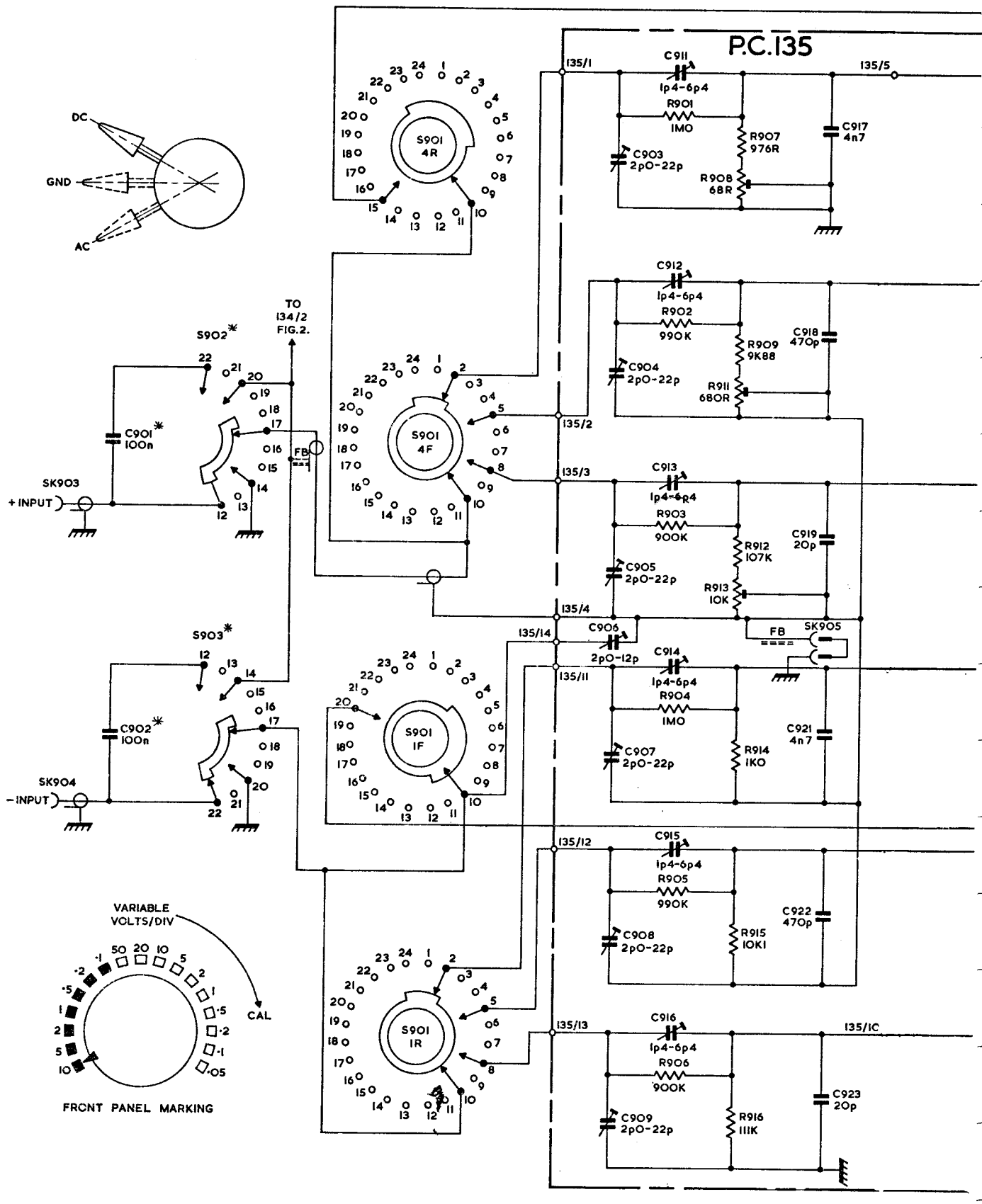

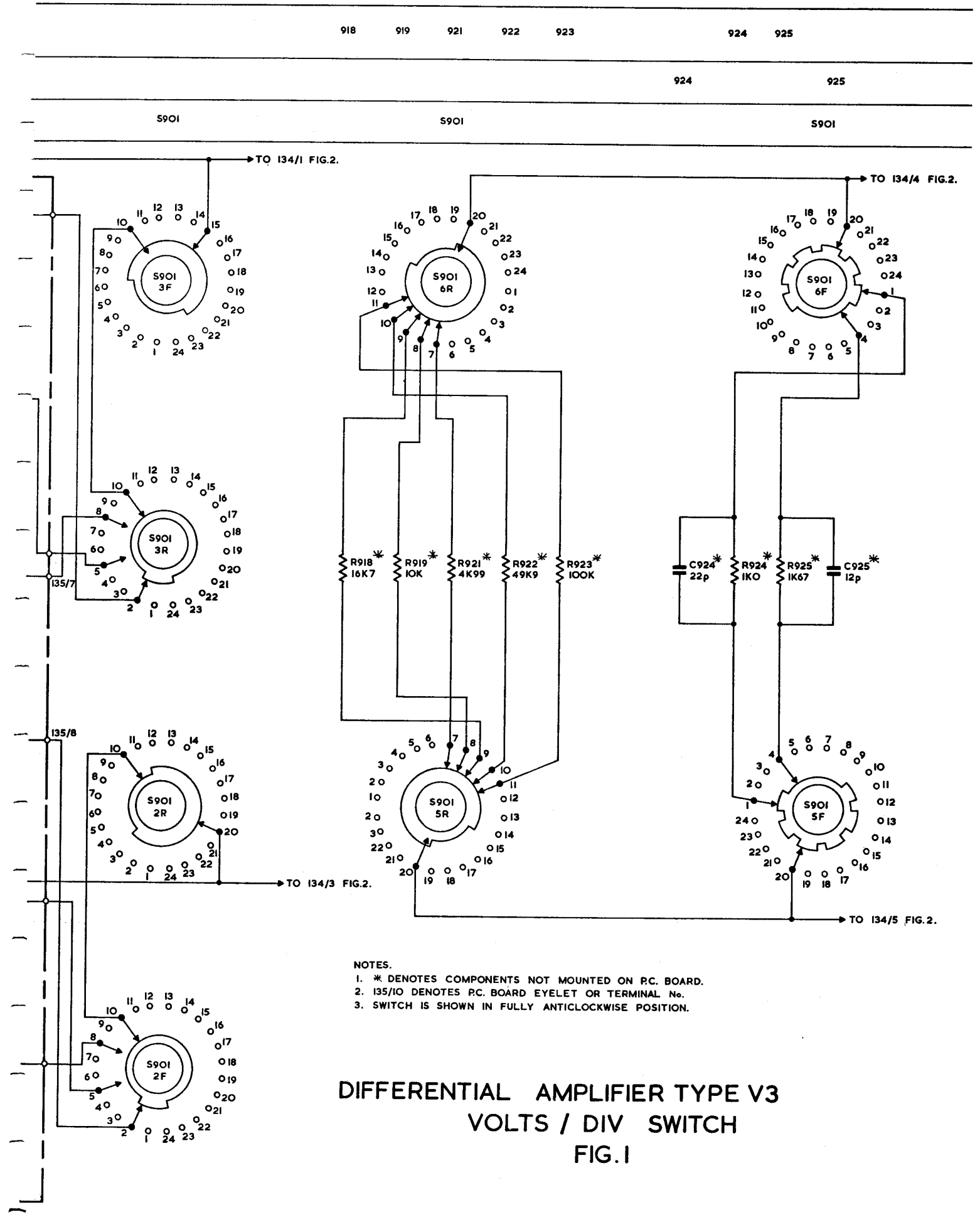

NOTES.
1. * DENOTES COMPONENTS NOT MOUNTED ON P.C. BOARD.
2. 135/10 DENOTES P.C. BOARD EYELET OR TERMINAL No.
3. SWITCH IS SHOWN IN FULLY ANTICLOCKWISE POSITION.

DIFFERENTIAL AMPLIFIER TYPE V3
VOLTS / DIV SWITCH
FIG. 1

RESISTORS	601 602	603 604 605 606	607 608	609 610	611 612	613	666	614 615 616	617 618	620	619	621
CAPACITORS	601 602	603 604	605	606	607	617	608	609	610		
MISC.	D601 D603	D602 D604	FS601 FS602	D605 D606	D609 D611	D607 D608	TR601A TR601B	TR602	TR603 D612		

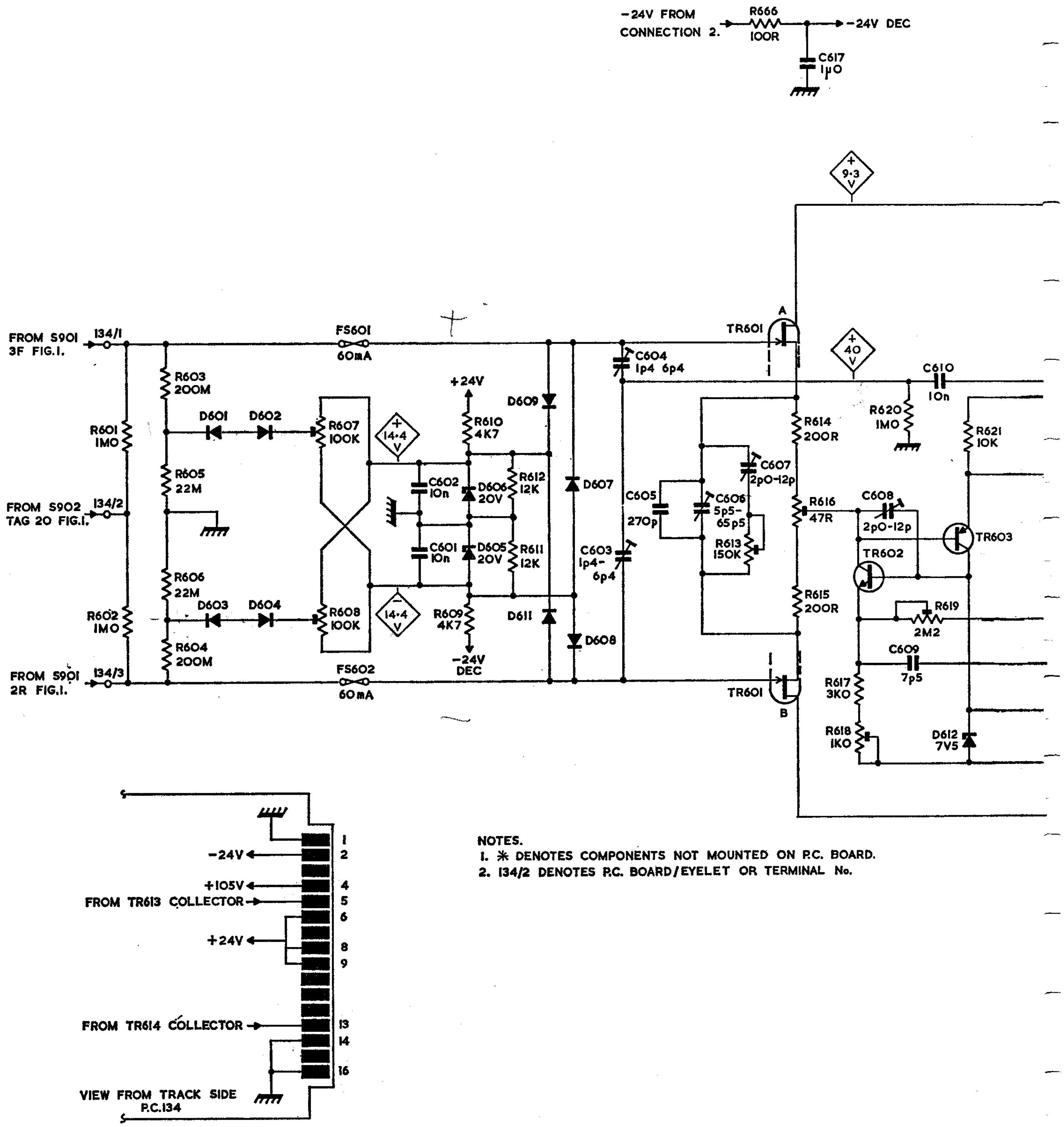

NOTES.
1. ✻ DENOTES COMPONENTS NOT MOUNTED ON P.C. BOARD.
2. 134/2 DENOTES P.C. BOARD/EYELET OR TERMINAL No.

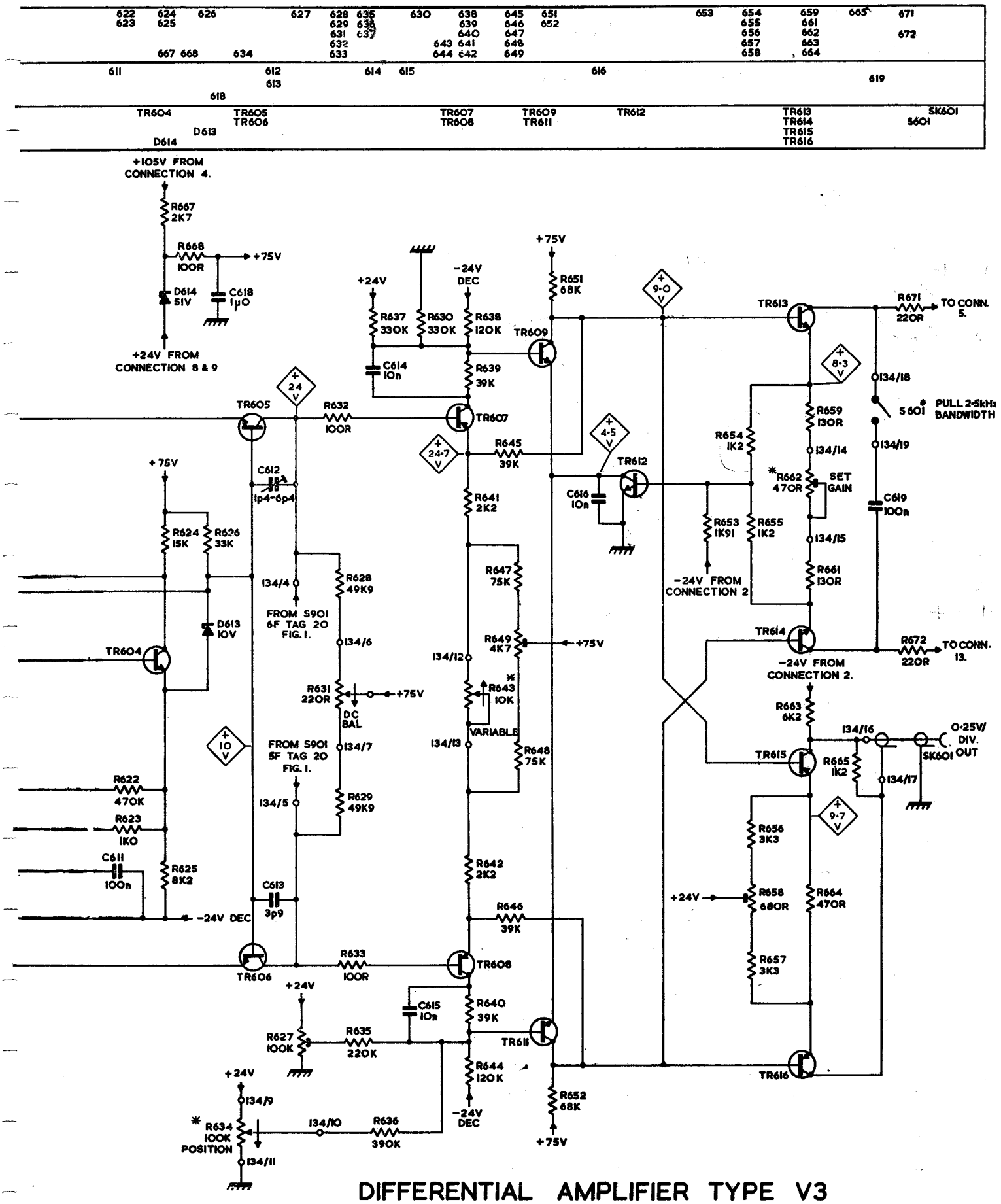

DIFFERENTIAL AMPLIFIER TYPE V3

P.C.134 FIG. 2.

Cir Ref	Grid Location
C601	3—C3
C602	3—C1
C603	3—C2
C604	3—C3
C605	3—D2
C606	3—D2
C607	3—D2
C608	3—D2
C609	3—D3
C611	3—D3
C612	3—D3
C613	3—D3
C614	3—E3
C615	3—E2
C616	3—F1
C617	3—F3
C618	3—E3

Cir Ref	Grid Location
C901	
C902	
C903	3—G6
C904	3—F6
C905	3—E4
C906	3—E4
C907	3—G5
C908	3—F5
C909	3—E4
C911	3—G6
C912	3—F6
C913	3—F6
C914	3—G5
C915	3—F5
C916	3—F5
C917	3—G5
C918	3—F5
C919	3—F5
C921	3—G5
C922	3—F5
C923	3—F5

Cir Ref	Grid Location
C924	
C925	
D601	3—B3
D602	3—C3
D603	3—B1
D604	3—C1
D605	3—C3
D606	3—C1
D607	3—C2
D608	3—C2
D609	3—C2
D611	3—C2
D612	3—D3
D613	3—D2
D614	3—F2

Cir Ref	Grid Location
FS601	3—C3
FS602	3—C2
R601	3—C2
R602	3—C2
R603	3—B2
R604	3—B2
R605	3—B3
R606	3—B2
R607	3—C2
R608	3—C1
R609	3—D3
R610	3—D1
R611	3—D3
R612	3—D1

Cir Ref	Grid Location
R613	
R614	3—D2
R615	
R616	3—D3
R617	3—D3
R618	3—E3
R619	3—C3
R621	3—D2
R622	3—D3
R623	3—D3
R624	3—D2
R625	3—E3
R626	3—D2
R627	3—E1
R628	3—E3
R629	3—E2
R630	
R631	
R632	3—E3
R633	3—E2
R634	3—E1
R635	

Cir Ref	Grid Location
R636	
R637	3—F3
R638	3—F3
R639	3—E3
R640	3—E2
R641	3—E2
R642	
R643	
R644	3—F2
R645	3—E3
R646	3—E2
R647	3—E2
R648	
R649	3—E2
R651	3—F3
R652	3—F2
R653	3—F3
R654	
R655	3—F2
R656	3—F2
R657	

Cir Ref	Grid Location
R658	3—G2
R659	3—F3
R661	
R662	
R663	3—G3
R664	3—F3
R665	3—G2
R666	3—F3
R667	3—F2
R668	3—E3
R901	3—G6
R902	3—G6
R903	3—F6
R904	3—G5
R905	3—F5
R906	3—F5
R907	3—G5

Cir Ref	Grid Location
R908	3—G5
R909	3—F5
R911	3—F5
R912	3—F5
R913	3—F5
R914	3—G5
R915	3—F5
R916	
R918	
R919	
R921	
R922	
R923	
R924	
R925	

Cir Ref	Grid Location
TR601A	3—C2
TR601B	
TR602	3—D3
TR603	
TR604	3—D2
TR605	3—D3
TR606	3—D2
TR607	3—E2
TR608	3—E2
TR609	3—F3
TR611	3—F2
TR612	3—F1
TR613	3—G3
TR614	3—G2
TR615	3—G3
TR616	3—G2
S901	
S902	
S903	

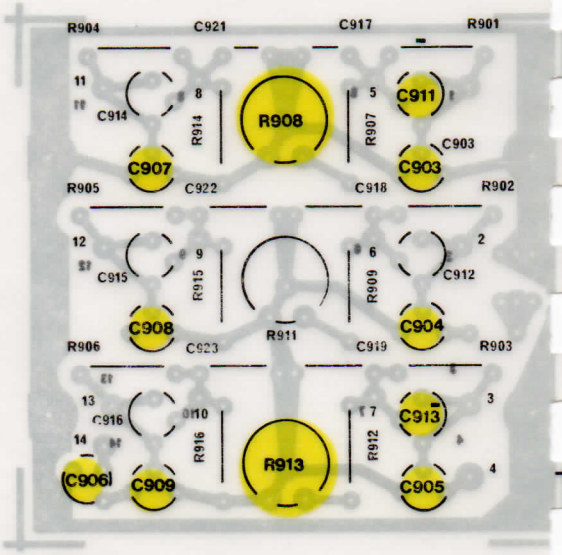

Ref. Figure 1

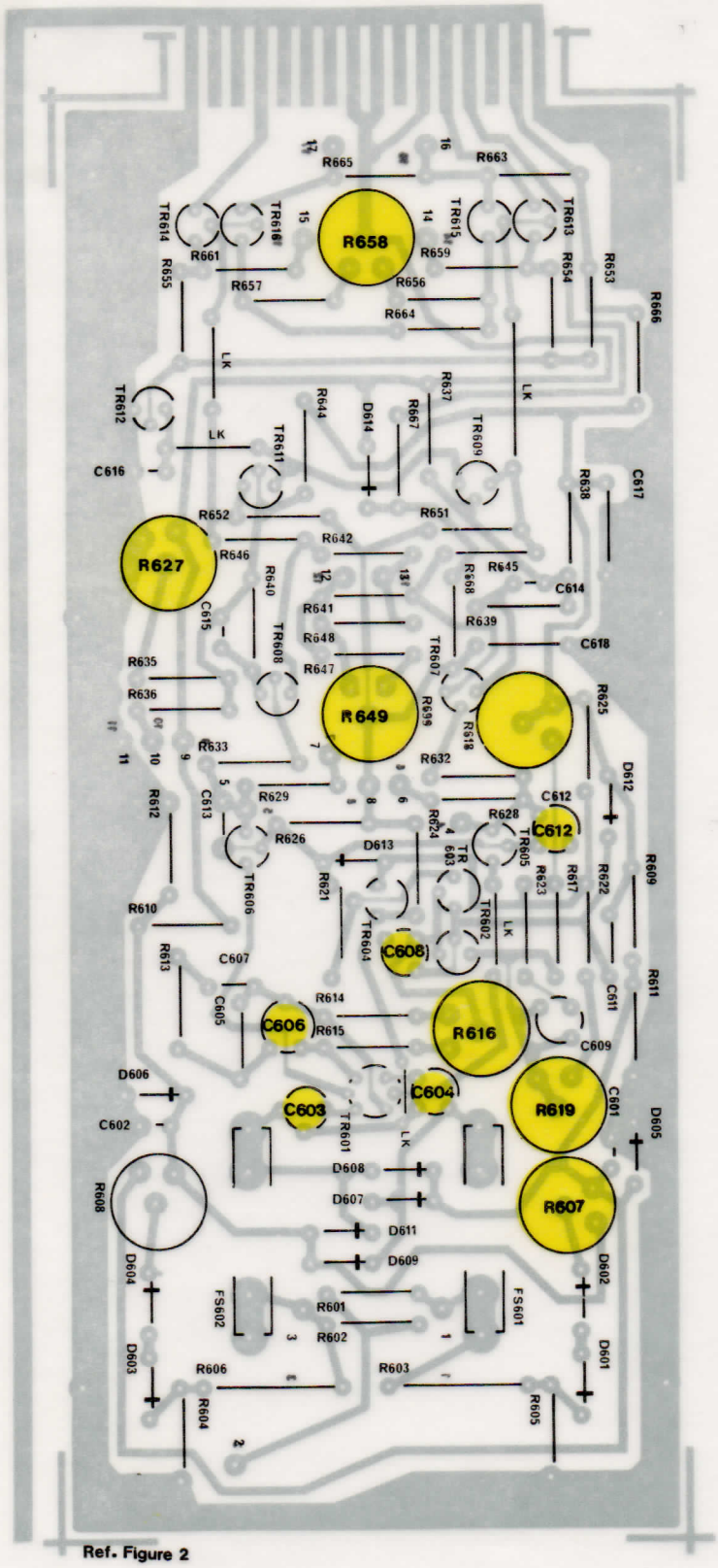

Ref. Figure 2

Figure 3
COMPONENT REFERENCE