TEKTRONIX®

DC 508
1 GHz COUNTER

INSTRUCTION MANUAL

Tektronix, Inc.
P.O. Box 500
Beaverton, Oregon 97077

Serial Number _____

070-2460-00

First Printing MAR 1978

WARRANTY

This Tektronix product is warranted against defective materials and workmanship, under normal use, for a period of one year from date of initial shipment. Tektronix will repair or replace, at its option, those products determined to be defective within the warranty period and returned, freight prepaid, to a Tektronix Service Center. There is no implied warranty for fitness of purpose.

Please direct all requests for service or replacement parts to the nearest Tektronix Service Center or Field Office; include the type or part number of the product and its serial number.

Products of Tektronix, Inc. and its subsidiaries are covered by U.S. and foreign patents and/or pending patents.

Printed in U.S.A. Specification and price change privileges are reserved.

TABLE OF CONTENTS

WARNING

The following servicing instructions are for use by qualified personnel only. To avoid personal injury, do not perform any servicing other than that contained in operating instructions unless you are qualified to do so.

TABLE OF CONTENTS (cont)

SAFETY INFORMATION

The following general safety information applies to all operators and service personnel. Specific warnings appear throughout the manual where they apply and should be followed in each instance.

WARNING statements identify conditions or practices which could result in personal injury or loss of life.

CAUTION statements identify conditions or practices which could result in damage to the equipment or other property.

The word DANGER on the equipment identifies areas of immediate hazard which could result in personal injury or loss of life.

The following safety symbol appears on the equipment:

⚠ Refer to the manual

Do Not Operate in an Explosive Atmosphere

To avoid explosion, do not operate this instrument in an area where flammable gases or fumes are present. Such operation could cause an explosion.

Avoid Excessive Moisture

To prevent damage from arcing, circuit boards and components must be dry before applying power.

Do Not Operate Without Covers

To avoid personal injury, do not operate the instrument without the panels or covers installed. Do not perform any servicing other than that described in the operating instructions unless you are a qualified serviceperson.

Do Not Service Alone

Do not attempt internal service or adjustment unless another person capable of rendering first aid and cardio-pulmonary resuscitation is present.

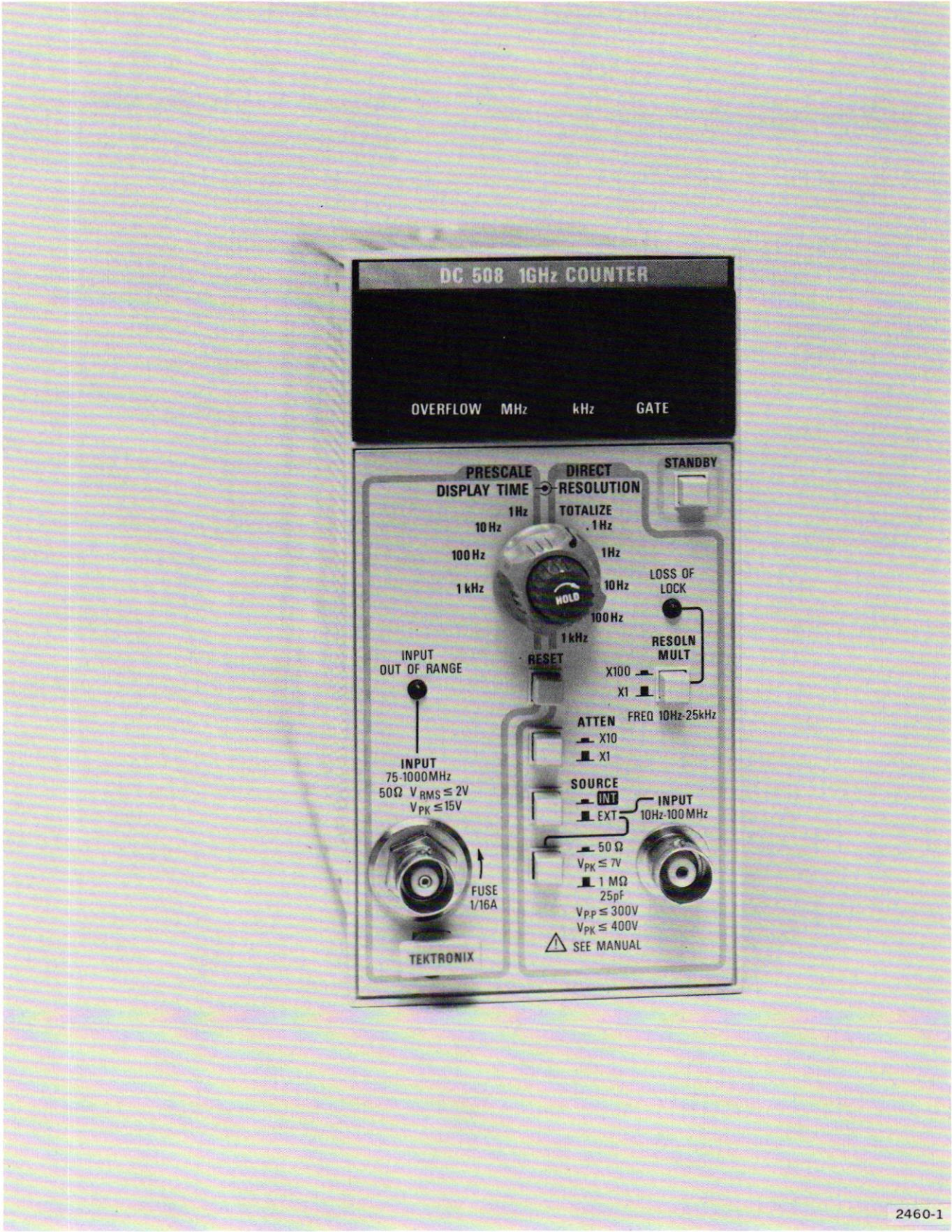

The DC 508 1 GHz Counter.

OPERATING INSTRUCTIONS

Instrument Description

The DC 508 1 GHz Counter measures frequency from 10 Hz to 1 GHz. Frequencies from 10 Hz to 100 MHz are measured using the direct input and from 75 MHz to 1 GHz using the prescaler input. The counter also totalizes events from 0 to 999,999,999. Nine 7-segment light emitting diodes (LED) provide a visual numerical display which allows resolutions of 1 kHz to 1 Hz (0.1 Hz when using the direct input). The decimal point is automatically positioned and leading zeros to the left of the most significant digit or decimal point are blanked. Digit overflow is indicated by a front panel LED.

The 50 ohm prescale input has a vswr of 2.2:1 or less and is protected by an easily replaced front-panel fuse which opens at approximately 9 V rms. A wide-band limiting amplifier with automatic gain control allows an input sensitivity of 20 mV rms over the frequency range of the prescaler input. If the input signal falls below the minimum level allowable for error free prescale counting, the LED display is blanked and an input error light is lit.

Direct input signals can be applied to either a front-panel bnc connector or to the rear interface connector. The DC 508 is designed to operate in a TM 500-Series power module.

Repackaging Information

If the Tektronix instrument is to be shipped to a Tektronix Service Center for service or repair, attach a tag showing owner (with address) and the name of an individual at your firm that can be contacted. Include the complete instrument serial number and a description of the service required.

Save and re-use the package in which your instrument was shipped. If the original packaging is unfit for use or not available, repackage the instrument as follows:

Surround the instrument with polyethylene sheeting to protect the finish of the instrument. Obtain a carton of corrugated cardboard of the correct carton strength and having inside dimensions of no less than six inches more than the instrument dimensions. Cushion the instrument by tightly packing three inches of dunnage or urethane foam between carton and instrument on all sides. Seal the carton with shipping tape or an industrial stapler.

The carton test strength for this instrument is 200 pounds per square inch.

Preparation For Use

CAUTION

Turn the power module off before inserting the plug in; otherwise, damage may occur to the plug-in circuitry.

Check to see that the plastic barriers on the interconnecting jack of the selected power module compartment match the cut-outs in the DC 508 circuit board edge connector. Align the DC 508 chassis with the upper and lower guides (see Fig. 1-1) of the selected compartment. Push the module in and press firmly to seat the circuit board in the interconnecting jack.

To remove the DC 508, pull on the release latch (located in the lower left corner) until the interconnecting jack disengages and the DC 508 slides out.

Controls and Connectors

See Fig. 1-2 for a description of the front panel controls and connectors.

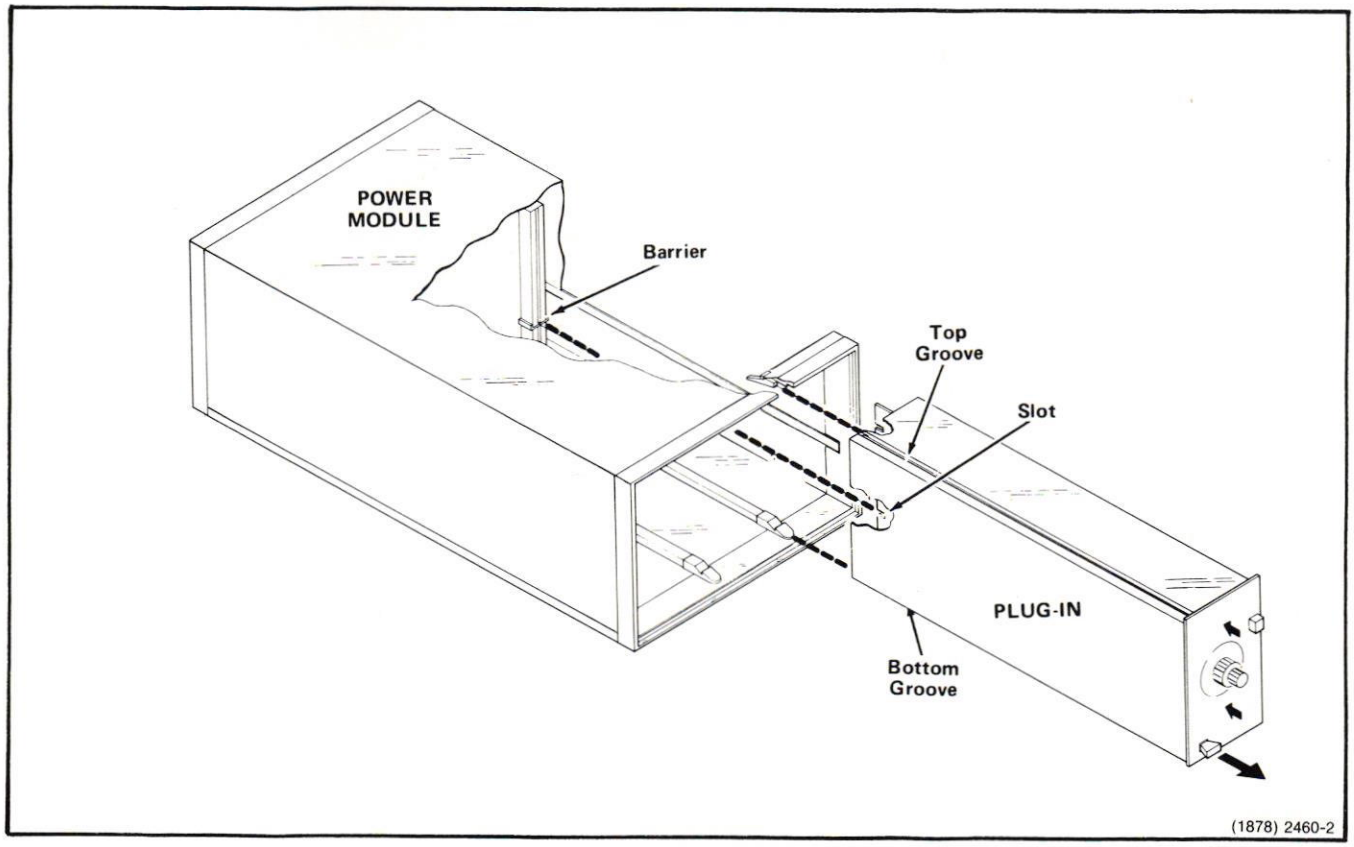

Fig. 1-1. Plug-in module installation and removal.

CONTROLS AND CONNECTORS

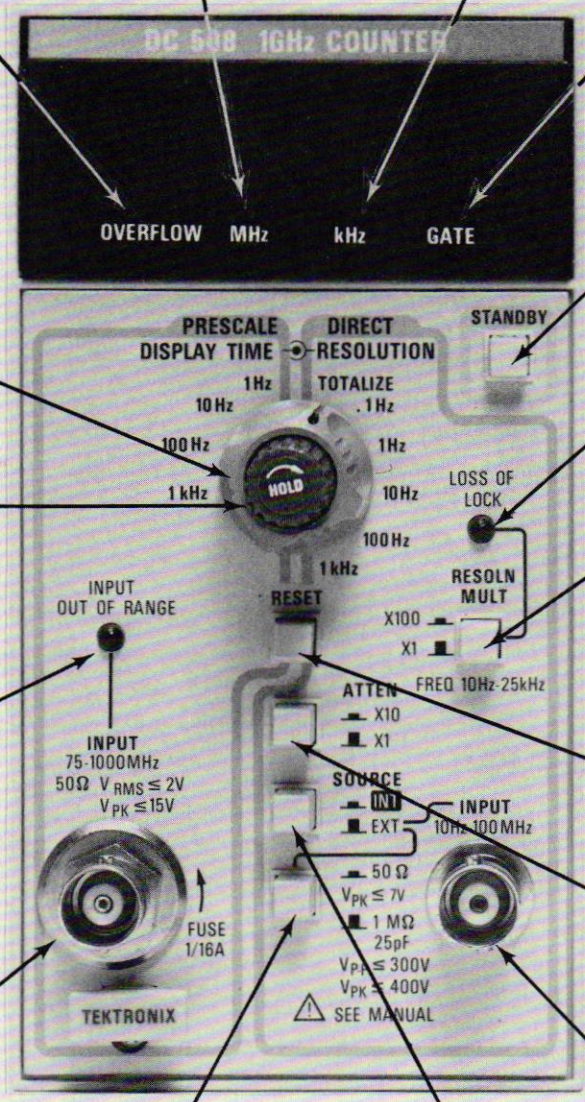

(14) MHz

Illuminated when counter units are in megahertz.

(15) kHz

Illuminated when counter units are in kilohertz.

(13) OVERFLOW

Illuminated when decimal counting units are full, i.e. after all digits in the display are nines.

(16) GATE

Illuminated during the measurement interval.

(1) RESOLUTION

Selects counter resolution in DIRECT or PRESCALE mode. Also selects TOTALIZE mode. RESOLN MULT switch must be in the X1 position for TOTALIZE operation.

(2) DISPLAY TIME

Selects time from end of one measurement gate to the start of the next gate.

(3) STANDBY

Button out removes power from all circuitry except the optional time base oscillator circuitry and crystal heater.

(4) LOSS OF LOCK

Illuminates when phase locked loop for RESOLN MULT is unlocked.

(5) RESOLN MULT

Button in multiplies frequency counted, from 10 Hz to 25 kHz, by 100 for greater resolution. Button out counts input frequency without multiplication. Button must be out for frequencies above 25 kHz, and when in TOTALIZE mode.

(12 INPUT OUT OF RANGE

Illuminated when amplitude or frequency is too low for proper operation.

(6) RESET

Momentary pushbutton which resets counter and illuminates all digits for segment check.

(7) ATTEN

Button in provides X10 attenuation for input signal, button out X1 attenuation.

(11) INPUT

Input connector for 75 MHz to 1000 MHz signals (PRESCALE INPUT).

(10) INPUT

Input connector for 10 Hz to 100 MHz signals (DIRECT INPUT).

(9) 50 Ω —1 MΩ

Button in selects input impedance of 50 Ω for DIRECT INPUT connector, button out selects 1 MΩ.

(8) SOURCE

Button in selects rear interface connector input, button out selects front panel input.

2460-3

Fig. 1-2. Front panel controls and connectors.

OPERATOR FAMILIARIZATION

CAUTION

To avoid instrument damage, make certain the voltages applied to the INPUT terminals do not exceed the maximums for low frequency signals, as stated on the front panel. See Fig. 1-3 for an explanation of terms and the Specification section for higher frequency limits.

Direct Input

For input frequencies from 10 Hz to 100 MHz use the DIRECT INPUT. To use the front-panel input bnc connector, make certain the SOURCE pushbutton is released. Depress the SOURCE pushbutton if the rear interface connector input is used. Select either the 50 Ω (pushbutton depressed) or the 1 MΩ input impedance (button released). Use the maximum practical attenuation to improve triggering and reduce the possibility of noise on the input signal causing erroneous triggering. See Fig. 1-4.

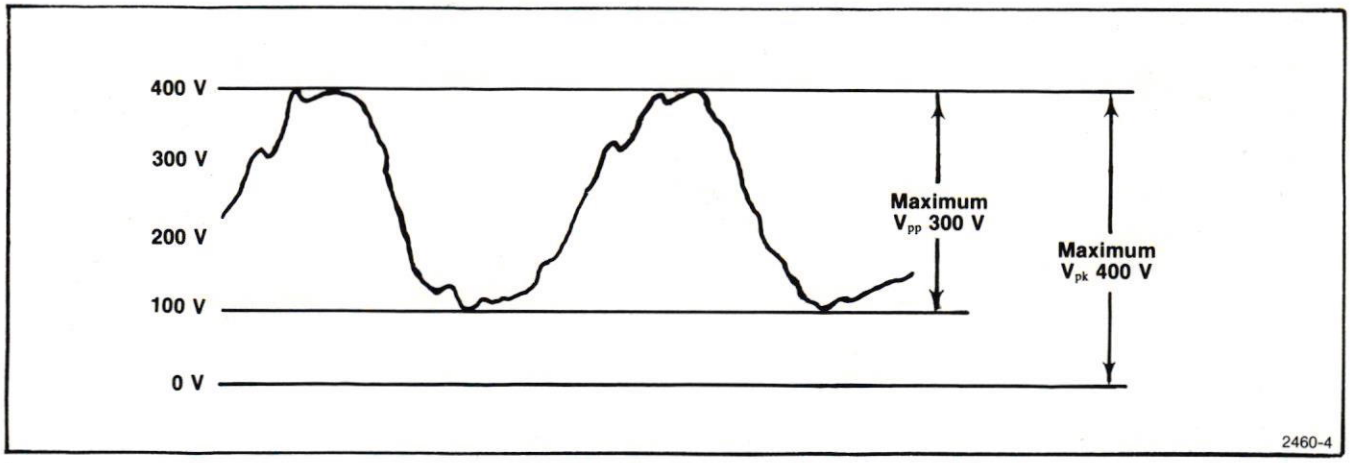

Fig. 1-3. Maximum front panel DIRECT INPUT voltages.

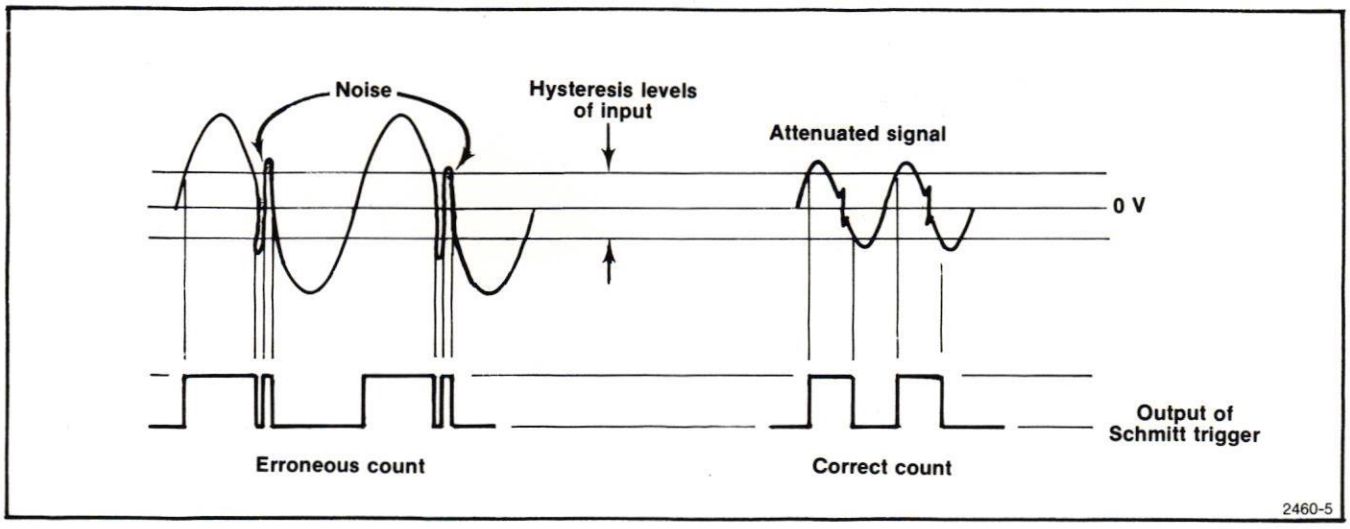

Fig. 1-4. An advantage in attenuating input signal.

Another way to couple signals into the DIRECT INPUT is through a 10X probe. Use a probe capable of compensating for the input capacitance of the DC 508 (≈20 pF).

Prescale Input

This input is terminated internally into 50 Ω. It is also fused to protect the input circuitry.

When using this input or the DIRECT INPUT terminated into 50 Ω for high frequency signals, use high quality 50 Ω cable, components, attenuators, etc. to prevent reflections or ringing caused by false counting. If the input amplitude or frequency at the PRESCALE INPUT drops below usable levels, the INPUT OUT OF RANGE light illuminates.

Frequency Measurements

Set the RESOLUTION control to the desired resolution for either the DIRECT or PRESCALE inputs. Note that a light appears under either the MHz or kHz nomenclature on the display. Make certain the STANDBY switch is depressed. Adjust the DISPLAY TIME control as desired. When this control is fully clockwise, the display is held and no further measurements are made. The lower the resolution, the faster the count sampling rate as indicated by the GATE light. The counter is accurate even though the OVERFLOW light is illuminated if the digits to the left of the most significant displayed digit are known. For greater resolution, operate the counter with the most significant digits dropped from the display and the OVERFLOW light illuminated. To reset the counter, push the RESET button.

When measuring frequencies from 10 Hz to 25 kHz, select the X1 or X100 resolution multiplication factor. The X100 position of the RESOLN MULT provides two additional digits to the right of the decimal point for additional resolution. In either the X1 or X100 position of the RESOLN MULT, the LOSS OF LOCK light illuminates when the multiplier is no longer locked to the incoming signal. This may be caused by either the input signal having insufficient amplitude, a frequency outside the specified range, or too much deviation if frequency modulated.

Totalize Mode

Place the RESOLUTION switch in the TOTALIZE mode. Connect the events signal to be counted to the INPUT connector, observing the same operating conditions, with respect to the input as in the counter mode.

NOTE

Make certain the RESOLN MULT pushbutton is out.

Ignore the loss of lock light. The GATE light remains on continuously. With no count, the least significant digit in the display always displays zero. To reset the counter to zero, press the RESET button.

SPECIFICATION

Performance Conditions

The electrical characteristics are valid only if the DC 508 has been calibrated at an ambient temperature between +20° C and +30° C and is operating at an ambient temperature between 0° C and +50° C, unless otherwise noted.

Items listed in the Performance Requirements column of the Electrical Characteristics are verified by completing the Performance Check in the Service Section of this manual. Items listed in the Supplemental Information column are not verified in this manual. They are either explanatory notes or performance characteristics for which no limits are specified.

Table 2-1

ELECTRICAL CHARACTERISTICS

Characteristics	Performance Requirements	Supplemental Information
	PRESCALE INPUT	
Frequency Range	≤75 MHz to at least 1 GHz.	Prescale divides input frequency by 8.
Gate Times (Resolution)		8 ms, 80 ms, 800 ms, and 8 s (1 kHz, 100 Hz, 10 Hz, and 1 Hz).
Sensitivity (measured from a 50 Ω source)	≤20 mV rms (−21 dBm) from ≤75 MHz to ≥1 GHz.	A two-pole high pass filter at about 75 MHz prevents erroneous counting if frequency is too low.
Impedance		50 Ω ac coupled
VSWR		≤2.2:1
Maximum Operating Input Voltage	≤2 V rms (+19 dBm) over the specified operating frequency range.	V_{pk}≤15 V
Input Protection Voltage		Input fuse opens at ≈9 V rms (+30 dBm).
Input OUT OF RANGE light		Lights when input voltage is below safe level for error-free counting. Indicates input voltage is too low or frequency is too high or too low. Display is blanked after the gate time when the signal has not met the minimum input requirements.

Table 2-1 (cont)

Characteristics	Performance Requirements	Supplemental Information
	DIRECT INPUT	
Frequency Range	≤10 Hz to at least 100 MHz.	
Gate Times (resolution)		1 ms, 10 ms, 100 ms, 1 s, 10 s, and totalize (1 kHz, 100 Hz, 10 Hz, 1 Hz, and .1 Hz).
External Sensitivity	≤15 mV rms from ≤10 Hz to ≥100 MHz.	
External Impedance		Input is ac coupled. On 50 Ω range termination is dc connected.
50 Ω		50 Ω ±10%.
1 MΩ		Approximately 1 MΩ in parallel with approximately 25 pF.
External Maximum Safe Input Voltage		
50 Ω		$V_{pk} \leq 7$ V.
1 MΩ, 1X Attenuation		$V_{pk} \leq 400$ V, $V_{p=p} \leq 300$ V from dc to 0.75 MHz. $V_{pk} \leq 400$ V, $V_{p=p} \leq 225 \div f_{MHz}$ from 0.75 MHz to 22 MHz. $V_{pk} \leq 400$ V, $V_{p=p} \leq$ 10 V above 22 MHz. Pulse: $V_{pk} \leq 400$ V, $\frac{dV}{dt} \leq 5$ V/ns.
1 MΩ, 10X Attenuation		$V_{pk} \leq 400$ V, $V_{p=p} \leq 300$ V from dc to 1 MHz. $V_{pk} \leq 400$ V, $V_{p=p} \leq 300 \div f_{MHz}$ from 1 MHz to 6 MHz. $V_{pk} \leq 400$ V, $V_{p=p} \leq 100$ V above 6 MHz.
Rear Interface Internal Input		
Sensitivity		≤125 mV rms from ≤10 Hz to ≥100 MHz.
Impedance		50 Ω ±10%.
Maximum Safe Input Voltage		$V_{pk} \leq 4$ V.
Resolution Multiplier		
Frequency Range	≤10 Hz to ≥25 kHz.	
Multiplication	X100.	
Lock Time	≤5 s.	

Table 2-1 (cont)

Characteristics	Performance Requirements	Supplemental Information
COUNTER ACCURACY		
Accuracy	The overall DC 508 Counter accuracy is: Accuracy (% of reading) = ± [time base accuracy + (1 ÷ total displayed counts)] X 100. Time base accuracy = ± [calibration accuracy + temperature stability + (aging rate X time since calibration) + short term stability]. Calibration accuracy = ± (calibrating standard accuracy + adjustment resolution)	
STANDARD INTERNAL TIME BASE		
Frequency		10 MHz.
Temperature Stability (0°C to +50°C)	±5 ppm.	
Aging		≤1 ppm/year.
OPTION 1 INTERNAL TIME BASE		
Frequency		10 MHz with proportional oven.
Temperature Stability (0°C to +50°C)	±0.2 ppm after warmup.	
Warm-up Time	Within ±0.2 ppm of final frequency in less than 10 minutes when cold started at 25°C ambient.	STANDBY switch allows power to oven to remain on while power is removed from remainder of instrument.
Aging		
At time of shipping		1×10^{-8}/day maximum.
After 30 days of continuous operation.		4×10^{-8}/week maximum.
After 60 days of continuous operation.		<1 ppm/year.
Short Term Stability		≤1×10^{-9} rms based on 60 consecutive 1 second measurements.
Adjustment Resolution		±2 parts in 10^{-8} or better.
Adjustment Range		Sufficient for 8 years of aging.

Table 2-1 (cont)

Characteristics	Performance Requirements	Supplemental Information
POWER CONSUMPTION		
Standard Instrument		≈15 W
With Option 1		≈17 W

Table 2-2

ENVIRONMENTAL CHARACTERISTICS

Characteristics	Performance Requirements	Supplemental Information
Temperature		Test to procedures of MIL-STD-810C Methods 502.1 and 501.1 using Procedure I as specified in MIL-T-28800B paragraph 4.5.5.1.3 and 4.5.5.1.4.
Operating	0°C to +50°C.	
Non-operating	−55°C to +75°C.	
Humidity		
Operating		+50°C to 95% relative humidity.
Non-operating		+60°C to 95% relative humidity. Test to MIL-STD-810C Method 507.1 Procedure IV, modified as specified in MIL-T-28800B paragraph 4.5.5.1.1.2.
Altitude		Test to MIL-STD-810C Method 500.1 Procedure I as specified in MIL-T-28800B paragraph 4.5.5.2.
Operating		To 15,000 feet.
Non-operating		To 50,000 feet.
Vibration		
Operating and Non-operating		With the instrument operating, the vibration frequency is swept from 10 to 55 to 10 Hz. Vibrate 15 minutes in each of the three major axes at 0.015″ total displacement. Hold 10 minutes at any major resonance, or if none, at 55 Hz. Total time, 75 minutes.
Shock		
Non-operating		30 g's, 1/2 sine, 11 ms duration, 3 shocks in each direction along 3 major axes, for a total of 18 shocks.
Transportation		Qualified under National Safe Transit Committee Test Procedure 1 A, Category II.

Table 2-3

PHYSICAL CHARACTERISTICS

Characteristics	Information
Maximum Overall Dimensions	
Height	4.969 inches (12.621 cm).
Width	2.638 inches (6.701 cm).
Length	12.088 inches (30.704 cm).
Front Panel	
Finish	Anodized aluminum.
Net Weight	Standard Instrument ≈2 lbs. 2 oz. (0.964 kg). Instrument with option 1 and 7 ≈2 lbs. 5 oz. (1.5 kg).

PERFORMANCE CHECK PROCEDURE

Introduction

This procedure checks the Electrical Performance Requirements as listed under Specification in this manual. Perform the adjustment procedure if the instrument fails to meet the requirements of these checks. In some cases, recalibration may not correct the discrepancy; circuit troubleshooting is then indicated. Also, use this procedure to determine acceptability of performance in an incoming inspection facility.

Test Equipment Required

The following test equipment, or equivalent, is suggested to perform this procedure.

Table 3-1

Description	Performance Requirements	Used For	Suggested Equipment
Sine-wave generator	10 Hz to 100 MHz, 15 mV. 75 Hz to 1 GHz, 20 mV.	Frequency range and sensitivity, 10 Hz to 1 GHz; maximum operating input voltage, 75 MHz to 1 GHz; resolution multiplier frequency range, 10 Hz to 25 kHz; resolution multiplier lock time, 10 Hz to 25 kHz.	TEKTRONIX SG 502, SG 503 and SG 504 or equivalent.
Frequency Standard, 1 MHz	1 MHz with $1 + 10^{-7}$ accuracy.	Internal time base temperature stability.	Hewlett-Packard 105A Frequency Standard or equivalent.
Precision 50 Ω coaxial cable		SG 503 output connection.	Tektronix Part Number 012-0482-00 or equivalent.
Coaxial cable	50 Ω.	All steps.	Tektronix Part Number 012-0057-01 or equivalent.
Bnc male to GR connector	50 Ω.	Prescale threshold adjust.	Tektronix Part Number 017-0063-00 or equivalent.
Timing device		Resolution multiplier lock time.	Stopwatch or equivalent.
Power module		All steps.	Tektronix TM series power module as required.

Preliminary Procedure

With the power module turned off, install the DC 508 in the power module. Turn all equipment on. Depress the STANDBY pushbutton. Allow at least 30 minutes warm up time.

Preliminary Control Settings

Set controls as follows before each step.

STANDBY	In
RESOLUTION	1 Hz DIRECT
DISPLAY TIME	ccw
RESOLN MULT	Out
RESET	Out
ATTEN	Out
SOURCE	Out
50 Ω	In

1. Check Frequency Range and Sensitivity

a. Connect the signal generator, capable of 75 MHz to 1 GHz, through a 50 Ω coaxial cable to the PRESCALE INPUT.

b. Set the RESOLUTION to 1 Hz for the PRESCALE INPUT.

c. Set the Amplitude of the signal generator to 0.02 V rms into 50 Ω.

d. Vary the signal generator output frequency from 75 MHz to 1 GHz.

e. Check—that the display tracks the signal generator over the entire frequency range.

f. Set the output amplitude of the sine-wave generator, capable of 10 Hz to 100 MHz, for 0.015 V rms into 50 Ω.

g. Connect the sine-wave generator to the DIRECT INPUT connector through a 50 Ω coaxial cable.

h. Set the controls to the preliminary control settings.

i. Vary the signal generator output frequency from 10 Hz to 100 MHz.

j. Check—that the display tracks the signal generator over the entire frequency range.

k. Disconnect all cables.

2. Check Maximum Operating Input Voltages

a. Set the output voltage from the sine-wave generators, covering the frequency range from 75 MHz to 1 GHz, at 2 V rms.

b. Connect the output of the selected sine-wave generator to the PRESCALE INPUT connector through a 50 Ω coaxial cable.

c. Set the RESOLUTION control to the 1 Hz PRESCALE position.

d. Vary the output of the sine-wave generator from 75 MHz to 1 GHz.

e. Check—that the counter display tracks the frequency of the signal generator.

f. Disconnect all cables and return the controls to the preliminary settings.

3. Check Resolution Multiplier Frequency Range

a. Connect a 10 Hz to 25 kHz sine-wave generator to the DIRECT INPUT.

b. Set the output amplitude of the sine-wave generator for an amplitude of ⩾15 mV into 50 Ω.

c. Check—that the LOSS OF LOCK light is off for all frequencies from 10 Hz to 25 kHz.

d. Leave this setup for the next step.

4. Check Resolution Multiplication Factor

a. Connect the 10 Hz to 25 kHz sine-wave generator to the DIRECT INPUT.

b. Obtain a stable counter display of any frequency between 10 Hz and 25 kHz.

c. Check—that the most significant digit shifts two places to the left and the count remains stable when the RESOLN MULT button is depressed. Release the button.

d. Leave this setup for the next step.

5. Check Resolution Multiplier Lock Time

a. Connect the output of a sine-wave generator capable of frequencies from 10 Hz to 25 kHz to the DIRECT INPUT.

b. Set the frequency of the sine-wave at 25 kHz and the amplitude at ⩾15 mV.

c. Obtain a stable counter display.

d. Rapidly shift the frequency of the generator to 10 Hz. Note that the LOSS OF LOCK light illuminates.

e. Check—that the LOSS OF LOCK light goes out in ⩽5 s.

f. Disconnect all cables.

6. Check Time Base Temperature Stability

a. Connect the 1 MHz frequency standard to the DIRECT INPUT on the DC 508.

b. Check—that the least significant digit in the display varies less than 5 digits (5 ppm) as the instrument is varied from 0°C to 50°C ambient temperature.

c. Disconnect all cables.

NOTE

The following steps are applicable to Option 1 or 7 equipped instruments only.

7. Check Optional Time Base Temperature Stability

a. Connect the 1 MHz frequency standard to the DIRECT INPUT on the DC 508.

b. Check—that the least significant digit in the display changes no more than two digits after warmup over the ambient temperature range of 0°C to 50°C.

c. Leave this setup for the next step.

8. Check Optional Time Base Warmup Time

a. Connect the 1 MHz frequency standard to the DIRECT INPUT connector.

b. Set the DIRECT RESOLUTION control to .1 Hz.

c. After complete warmup, note the displayed frequency on the DC 508.

d. Remove the counter from the power module and allow the DC 508 to cool for at least two hours at 25°C ambient.

e. Place the counter in the power module at an ambient temperature of 25°C and apply power to the module.

f. Check—that within 10 minutes after reinstalling the counter in the power module the least significant digit is within two counts of the previously noted reading.

g. Disconnect all cables.

This completes the procedure.

WARNING

THE FOLLOWING SERVICING INSTRUCTIONS ARE FOR USE BY QUALIFIED PERSONNEL ONLY. TO AVOID PERSONAL INJURY, DO NOT PERFORM ANY SERVICING OTHER THAN THAT CONTAINED IN OPERATING INSTRUCTIONS UNLESS YOU ARE QUALIFIED TO DO SO.

ADJUSTMENT PROCEDURE

Introduction

Use this adjustment procedure to restore the DC 508 to original preformance requirements. This procedure need not be performed unless the instrument fails to meet the performance requirements of the electrical characteristics listed in the Specification Section, or the performance check cannot be completed satisfactorily.

Completion of all adjustment steps in this procedure insures that the instrument will meet the performance requirements.

To ensure instrument accuracy, check the calibration every 2000 hours of operation, or at a minimum of every six months if used infrequently.

Services Available

Tektronix, Inc. provides complete instrument repair and adjustment at local field service centers and at the factory service center. Contact your local Tektronix field office or representative for further information.

Test Equipment Required

The test equipment (or equivalent) listed in Table 4-1 is required for adjustment of the DC 508. Specifications given for the test equipment are the minimum necessary for accurate adjustment. All test equipment is assumed to be correctly calibrated and operating within specifications.

If other test equipment is substituted, control settings or calibration setup may need to be altered to meet the requirements of the equipment used.

A flexible plug-in extender, Tektronix Part Number 067-0645-03, is useful for obtaining access to the adjustments.

Table 4-1

TEST EQUIPMENT REQUIRED

Description	Performance Requirements	Use	Equipment Recommended
Digital voltmeter	±15 V range, 3 1/2 digit, 0.5% accuracy.	Check power supply accuracy.	TEKTRONIX DM 502 or equivalent.
Oscilloscope	0.1 μs sweep rate, external triggering and vertical sensitivity with probe of at least 2 V/div.	Clock frequency check.	TEKTRONIX SC 502 or equivalent.
Oscilloscope probe	10 X attenuation	Clock frequency check.	TEKTRONIX P6108 or equivalent.
Frequency standard, 1 MHz	Standard time base: ≤0.1 ppm; accuracy; optional time base: ≤2.0 X 10^{-9} accuracy.	Clock frequency check.	Hewlett Packard 105A or equivalent.
Sine-wave generator	300 MHz at ≤1.5 V p-p.	Prescale threshold adjust.	TEKTRONIX SG 504 or equivalent.
Power meter	3.57 μW at 300 MHz.	Prescale threshold adjust.	Hewlett Packard 435A with 8481A head or equivalent.
Power T with GR connectors	50 Ω impedance.	Prescale threshold adjust.	Tektronix Part Number 017-0082-00 or equivalent.
2 ea bnc 5X attenuators	5X attenuation.	Prescaler threshold adjust.	Tektronix Part Number 011-0049-01 or equivalent.
Bnc female to GR connector	50 Ω.	Prescale threshold adjust.	Tektronix Part Number 017-0063-00 or equivalent.
N female to GR adapter	50 Ω.	Prescale threshold adjust.	Tektronix Part Number 017-0062-00.

Preparation

Remove the left side cover of the DC 508 to gain access to the adjustments. Pull the rear of the side cover outward from the instrument. Adjustment locations are shown in the illustration located in the pullout pages at the rear of this manual.

Connect the DC 508 to the power module via the flexible plug-in extender. Connect all test equipment to a suitable line voltage source. Turn on all test equipment and the DC 508; allow at least 30 minutes for equipment warm up and stabilization. Make adjustments at an ambient temperature from +20°C to +30°C (+68°F to +86°F).

1. Check Power Supply Voltages

a. Using the digital voltmeter check the power supply voltages according to Table 4-2.

Table 4-2

Voltage	Range
+15 V	14.25 V to 15.75 V
−15 V	−13.95 V to −16.05 V
−2 V	−1.8 V to −2.2 V
+5 V	+4.75 V to +5.25 V

2. Adjust Time-Base Accuracy

a. Connect the 10 X probe from the oscilloscope vertical input, set to measure a 2 V signal, to the oscillator test point (TP1436) as shown in the Adjustment Location pullout page.

b. Set the oscilloscope sweep rate at .1 μs/div.

c. Connect the external trigger input of the oscilloscope to the frequency standard.

d. Set the oscilloscope for external triggering.

e. Adjust the oscilloscope for stable triggering.

f. Adjust the counter time-base (see Adjustment Location) so that the time marks are horizontally stable (do not move) on the oscilloscope crt.

g. Disconnect all cables and probes.

3. Adjust Prescaler Threshold

a. Make certain the STANDBY button is in. Set the PRESCALE switch to any PRESCALE position.

b. Connect the SG 504 output head to the bnc 5 X attenuator, the bnc to GR adapter, and to the GR power tee.

c. Connect a 5 X attenuator from one side of the power tee, through a GR to bnc connector, to the PRESCALE INPUT on the DC 508.

d. Connect the power meter, through the GR to N adapter, to the other side of the power tee.

e. Adjust the output of the SG 504, set for 300 MHz, for a reading of 89.8 μW on the power meter. This corresponds to 13.4 mV rms at the input connector of the DC 508.

f. Turn the Threshold Adjust, R2422, clockwise until the INPUT OUT OF RANGE light goes out. Then adjust the potentiometer ccw until the light comes on. Now adjust the control clockwise until the light just goes out.

g. Disconnect all cables from the test equipment and the DC 508. This complete the adjustment procedure.

MAINTENANCE AND INTERFACING INFORMATION

Preventive Maintenance

There are no special preventive maintenance procedures that apply to the DC 508. Refer to the power module instruction manual for general preventive maintenance procedures and instructions.

Corrective Maintenance

Refer to the power module instruction manual for general corrective maintenance procedures and instructions.

Prescaler Fuse Replacement

To replace the fuse, unscrew the bnc connector using a 7/16" wrench. Remove the connector shell and the metal spacer surrounding the fuse. If the fuse doesn't come out with the connector, grasp the fuse lead with pliers and pull. Notice the small insulating washers on the fuse leads. Make certain the washers, with the flanges toward the fuse, are reinstalled on the leads before reassembly. If the washer remains in the instrument when the fuse is removed, the fuse lead can be installed back into the instrument without removing the insulator. See Fig. 5-1.

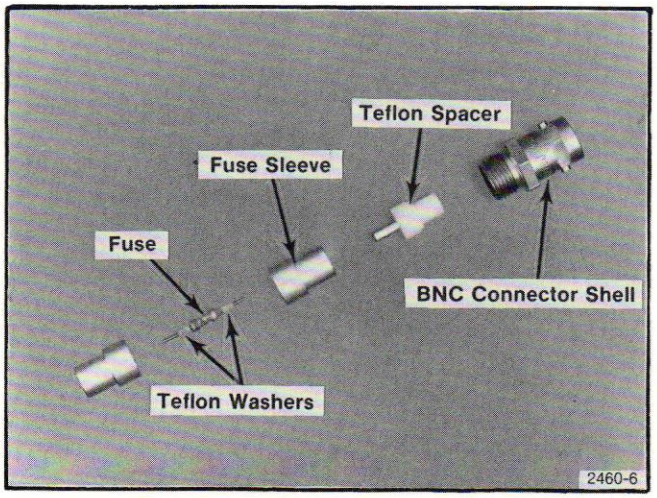

Fig. 5-1. Front panel fuse assembly.

Prescaler Removal

To remove the prescaler, first remove the flat-head screw and nut attaching the angle bracket to the top of the plug-in. Then remove the recessed screw on the left side of the prescaler. Next, remove the screw attaching the lower rear mounting post, for the prescaler board, to the main board. This screw is accessed through a hole in the resolution multiplier board. Next, remove capacitor C1230 (Option 1 and 7 instruments only) to gain access to the screw attaching the upper rear mounting post to the main board. Remove the screw attaching this post to the main board. Finally, remove the two coaxial connections to the prescaler, and remove the plug attaching the four wires to the main board.

Prescaler Troubleshooting

Transistor failures can often be determined by voltage measurements. When the unit is operating, measure the voltage from the collector of the rf transistor to ground. The collector is the large pad nearest to this transistor. This voltage should be approximately 7 V dc. The prescaler waveform can also be viewed by using a 500 Ω ac coupled sampling probe. Connect the sampling probe to the collector pads described above.

FUNCTIONS AVAILABLE AT REAR CONNECTOR

A slot between pins 21 and 22 on the rear connector identifies the DC 508 as a member of the counter family. Insert a barrier in the corresponding position of the power module jack to prevent other than signal source plug-ins from being used in that compartment. This protects the plug-in if specialized connections are made to that compartment. Consult the Building a System section of the power module manual for further information. Signal outputs, or other specialized connections, may be made to the rear interface connectors as shown in the input-output assignments illustration in the pull-out pages at the rear of this manual. A description of these connections follows.

BCD Output Data (contacts 20B, 20A, 21B, and 19A)

These contacts provide bcd data (8, 4, 2, 1, code) directly to the power module interface. The count (front-panel display) is transmitted in serial-by-decimal digit sequences. The decimal-digit sequence is from left to right (msd to lsd) as observed on the front-panel display. The binary levels are positive-true logic. Each output data line is capable of driving five TTL loads (8 mA). During time slot zero, all four bcd lines are high.

Decimal Point Scanned Output (contact 27B)

A decimal point to the left of a selected digit is scanned (made active) during its particular time slot. Contact 27B goes high and remains high for one scan-clock period, indicating that a decimal point is scanned. This data line will drive nine TTL loads (15 mA).

Time Slot Zero Output (contact 25A)

This line provides a reference time indication for proper demultiplexing of the display bcd information. This pulse is negative-going and equal in width to one scan-clock period. The negative-going leading edge is time-coincident with the rising edge of the scan-clock line. The next rising edge of the scan-clock line places the first (msd) digit of bcd information on the four bcd output lines. This connection will drive five TTL loads (8 mA).

Scan Clock Output (contact 24B)

This output line provides about a 5 kHz square-wave signal at the rear interface. A different front-panel digit is displayed on each rising edge of the scan-clock waveform. The display scans from time slot zero to the most significant digit, and then through the digits in sequence to the least significant digit on succeeding scan clock cycles.

The corresponding bcd information is transferred to the output on each scan clock positive-going edge. To allow for propagation delays, the data should be transferred to external memory on the following negative-going edge. This output data line will drive two TTL loads (3.2 mA).

Data Good Output (contact 19B)

This output line provides a low data good (latch) pulse. The pulse duration is determined by the measurement interval plus the display time and occurs after each updating of the display storage latches. The accumulated count is transferred to the latches when this line is high and is actually latched on the falling edge. Data should not be acquired until after the falling edge to avoid errors. This data line will drive one TTL load (1.6 mA).

Overflow Output (contact 23B)

Contact 23B is normally at a low level and goes high to indicate that the counter is in an overflow condition. Contact 23B is at a high level any time that the front-panel OVERFLOW light is on. This output data line will drive two TTL loads (3.2 mA).

Reset Input-Output (contact 26A)

The counter is cleared to zero when a low is applied to 26A. This is accomplished from the front-panel by pushing the RESET button or moving the RESOLUTION control between detents. When used as an output, this line will drive two TTL loads (3.2 mA). Contact 26A also goes low momentarily during power-up reset, when the counter prepares itself for operation. This contact does not go low when the internal circuitry clears itself for another count. This output will drive two TTL loads (3.2 mA).

When contact 26A is used as a reset input function, the external circuit must be able to drive 15 TTL loads; a discrete transistor capable of 24 mA can be used.

Gate Out (contact 28B)

This contact provides a gate out signal that is high during the time that the internal gate is open (while an input signal is gated into the decade counter units). This output line will drive five TTL loads (8 mA).

Internal Signal Input (contacts 16A and 17A)

Input signals can be applied through the rear interface via contact 16A, with 17A serving as a ground reference (coaxial-cable shield connection). To select input signals via contact 16A, depress the front-panel SOURCE switch, to the INT position. The input signals are ac coupled. Contact 16A is terminated in a nominal 50 Ω load impedance. Connections should be made using 50 Ω coaxial cable with leads as short as possible for full bandwidth operation.

External Clock Input (contacts 14A and 17A)

An external clock signal can be used instead of the internal 10 MHz clock by applying the input to 14A and using 17A to ground a coaxial-cable shield. To use the external clock signal, set the internal jumper to the EXT position. The internal frequency selection jumper should be properly placed for 1, 5, or 10 MHz depending on the external clock frequency. The input signal should be a TTL level signal capable of driving an ac-coupled 1 kΩ load.

Start Count Input (contact 18B)

For instruments without Option 7, this line initiates the DC 508 measurement cycle by an external trigger signal. When the SOURCE switch is depressed and a signal is present on the rear interface (pins 16A and 17A), a measurement may be initiated by bringing this line high. A single measurement is made if the line is pulled low before the gate and display times have elapsed. If the line is held high, the counter makes continuous readings. The load is one TTL (1.6 mA). See the Options section for functions with Option 7 equipped instruments.

Counter Identify Output (contact 23A)

This line is low when the SOURCE switch is depressed (Internal) for instruments without Option 7. This indicates that the instrument is in the count on command mode as explained in the Start Count description. This output provides 16 mA, equivalent to 10 TTL loads. This contact is disconnected in Option 7 equipped instruments.

Counter Identify Output—Option 7 (contact 17B)

This contact is grounded internally in the DC 508. Their is no connection to this pin in instruments without Option 7.

100 kHz Resolution Input—Option 7 (contact 16B)

When this contact is low and the instrument is equipped with Option 7, the counter goes to a 10 μs gate time for a resolution of 100 kHz. When this line is high, the counter operates normally. This input requires 3.2 mA, equivalent to two TTL loads. This contact has no function in instruments without Option 7.

Sweep Input—Option 7 (contact 15B)

When this contact is low and the instrument is equipped with Option 7, the counter operates continuously; when high, the instrument counts only when contact 18B, start count, goes high. This contact outputs 1.6 mA, equivalent to one TTL load. This contact is unwired in instruments without Option 7.

Source Identify Input—Option 7 (contact 14B)

When this contact is low, all Option 7 functions are enabled; when this contact is high, the counter operates normally. This contact requires 4.8 mA, equivalent to three TTL loads. This contact is unwired in instruments without Option 7.

Gate Output—Option 7 (contact 18A)

This contact goes low during the measurement interval in instruments equipped with Option 7. It outputs 15 mA, equivalent to nine TTL loads. There is no connection to this contact in instruments without Option 7.

CIRCUIT DESCRIPTION

Direct Input

The signal applied to the DIRECT INPUT connector passes through the SOURCE switch to the gate of Q1790. Switch S1790 places a 47 Ω resistor in parallel with the input in the 50 Ω position. The 1 MΩ input impedance in the 1 MΩ position is determined by R1596. SOURCE switch S1690 selects either the front panel EXT input or the rear interface connector input (INT), which always has a 50 Ω input impedance. Ten times attenuation is provided by R1593 and R1594, and compensated by C1592 and C1599. The attenuator is switched in or out of the circuit by S1590. Diodes CR1680 and CR1790 provide overvoltage protection for Q1790. MOSFET Q1790 operates as a phase splitter. Constant current to Q1790 is supplied by Q1792 and associated circuitry. The 180° out of phase signals from the drain and source of Q1790 feed the inputs of U1670B at pins 9 and 10. This integrated component is a triple line receiver and operates as a differential amplifier. The output of the first unit drives the second unit at pins 4 and 5. Each of the first two stages of the line receiver have gains of about five. The third line receiver, U1670C, is configured as a Schmitt trigger circuit. Input peaking for the higher frequencies is accomplished by C1673. Output from the Schmitt trigger is taken at pin 15 at ECL logic levels (3.4 V to 4.2 V) and fed to the resolution multiplier and RESOLN MULT switch. The output of this switch goes to the electronic switch which selects either the prescale or direct inputs.

Resolution Multiplier

Transistor Q4310 operates as an ECL to TTL converter. The signal, at the same frequency as the DIRECT INPUT, is inverted and buffered for a 10 V swing by U4220C and fed to pin 14 of U4230. This integrated circuit consists of a phase comparator and voltage controlled oscillator; only the phase comparator is used. The dc voltage at the gate of U4130, pin 3, determines the oscillator frequency.

To understand the operation of oscillator circuitry, assume that the emitter of Q4242 is at 10 V. Current flows through U4130A and R4334 charging capacitor C4130. Pin 10 of U4130C is at about 10 V, pin 12 at about 0 V and the base of Q4242 at about 10 V. Transistor Q4242 is off. The drain of U4130A goes negative at a rate determined by the current through U4130A. When the voltage at the drain of U4130A drops to about 5 V, pin 12 of U4130C switches to about 10 V and pin 8 goes low turning Q4242 on. As current flows through Q4242, the voltage drop across R4334 increases turning on Q4240. Current flow through Q4240 is much greater than through U4130A and pin 10 of U4130C rises rapidly until U4130C and B change state turning off Q4242 and repeating the cycle. The output waveform at the collector of Q4242 is a fast spike from 0 V to about +5 V. The frequency of this circuit varies from about 500 Hz to about 35 MHz. This is accomplished by varying the current through U4130A and consequently the charge time of C4130.

The positive-going 0 V to about +5 V spike at varying frequencies is fed to U4220A, buffered and inverted and then fed to the input of U4322 at pin 4. This integrated circuit divides the output signal frequency by 100. The output of U4322 at pin 13 is fed to U4220B, at pins 4 and 5, a TTL to MOS converter. The output (0 V to +10 V signal) of U4220B, is fed to the second input, pin 3, of the phase comparator.

In summary, if the frequency of the waveform at the collector of Q4242 goes higher than exactly 100 times the frequency of the input waveform at pin 14 of U4230, the output voltage at pin 13 of U4230 goes more negative, reducing the frequency of the oscillator until both frequencies are in lock. When the circuit is out of lock, pin 1 of U4230 goes low turning Q4120 and Q4110 on. This illuminates the LOSS OF LOCK light and places a low on pin 13 of U4220D. This action prevents the 100 times frequency from passing through U4220D to the X1—X100 switch.

The signal from the direct input circuitry or the resolution multiplier passes to pin 10, U1570C. When the counter operates in the direct input mode, switch S1380-13 is open. This places pin 11, U1570C, low and the signal at pin 10 is inverted and sent to pin 13 of U1570D. Pins 6 and 7, U1570B, are also low causing a high at pin 3. This disables U1570A so that no signals from the prescaler pass through U1570A. When the prescaler is used, S1380-13 is closed; this disables U1570C and enables U1570A. The output signal from the prescaler now passes through U1570D to the counting circuitry.

Prescaler

The block diagram for the DC 508 prescaler can be broken into several sections. These sections are: input protection, automatic gain control, wide band amplifier, peak detector, and prescaling dividers. See the Prescaler Block Diagram in the pullout pages at the rear of this manual.

Input signals to the prescaler pass through a 1/16 A fuse used for input protection (the fuse blows with about 9 V rms applied to the input). The signals then pass through C2110 and associated resistors. A 3.5 dB attenuator (R2210, R2212 and R2214) limits the current in the clamp diodes under transient conditions. This attenuator also improves the vswr at the input connector when the agc diode (CR2214) attenuates. Diodes CR2218 and CR2216 operate as clamp diodes limiting the positive and negative voltage peaks into the amplifier. At low signal levels, the agc diode is forward biased at about 10 mA; this presents a low impedance to the rf signals. As the signal level increases, current through CR2214 reduces, raising the rf impedance and attenuating the input signal. This system maintains a constant signal level at the input of the uhf amplifier. The 3.5 dB attenuator is sufficient to keep input vswr at or below 2.2:1 even when CR2214 presents a very high rf impedance.

The uhf amplifier consists of four identical stages with about 9 dB gain each. These amplifiers are designed for gain flatness to above 1000 MHz. The input and output impedance of each stage is approximately 50 Ω.

The gain stages are common emitter amplifiers using uhf transistors. Impedance matching between stages is accomplished by microstrip transmission lines. At high frequencies the gain is almost entirely determined by these transmission lines. The bias of each transistor is controlled by active bias supplies. These transistors are: Q2125 biasing Q2226, Q2135 supplying bias for Q2236; Q2145 biasing Q2246, and Q2155 biasing Q2256. These bias supplies provide constant collector current and maintain the collector-to-emitter voltage independent of the rf transistors' current gain. This circuit configuration maximizes the high frequency gain of each transistor. Diode clamps CR2242 and CR2245 are provided at the collector of the third gain stage. These diodes prevent hard overdrive of the fourth amplifier stage. The output of the last stage, Q2256, limits at about 1 V p-p. This provides proper drive level for the divide-by-four prescaler, U2350A.

A peak detector consisting of CR2460, C2460, and U2330A monitors the output of the amplifier to sense when enough wignal exists to drive U2350A properly. A high pass filter consisting of L2362, C2362, R2368, and R2466 rolls off frequencies below about 75 MHz. The purpose of this filter is to prevent false counting if the frequency of the applied signal is too low. If too low a frequency or too little amplitude is applied to the prescale input, the peak detector applies a high to the reset of the second divider, U2345, to inhibit its output. Transistor Q2436 inverts and buffers the inhibit signal to provide a blank signal to the main board. Diode CR2460 provides temperature compensation for the peak detector. Adjustment R2422 simultaneously sets the thresholds of the peak detector and the agc. Operational amplifier U2330B provides automatic gain control current for the agc diode, CR2214. As the output amplitude increases at the anode of CR2462, pin 6 of U2330B goes more positive. This causes pin 7 to go more negative reducing current flow through agc diode CR2214, thus attenuating the input signal to Q2226.

The input to U2350A is matched to about 50 Ω by R2350 and a shorted transmission line. The second prescaling divider, U2345, divides by two. The input is ac coupled through C2356 to improve the temperature tracking with U2350A. The output of U2345, which equals the input frequency divided by eight, is coupled to the main board through R2440. This resistor improves the impedance match between the output of U2345 and the switching gates on the main board.

Standard Time Base

The clock frequency is generated by Q1422 operating as a Colpitts oscillator; the frequency is determined by Y1410. A small frequency change is accomplished by C1310 used for precise adjustment. Zener diode VR1310 provides +12 V at the junction of R1312 and R1424. The output is fed to the base of amplifier Q1420. Diode CR1420 prevents C1426 from charging due to rectification of the 10 MHz signal by the base-emitter junction of Q1420. The 10 MHz clock frequency is fed to pin 1 of J1432.

Optional Time Base

The 25 V ac from the power module is bridge rectified by CR1210, filtered by C1230, C1132 and C1112, and applied to the input of regulator U1110. This regulator provides +24 V dc output and is protected internally from overloads. The +24 V is applied to the oscillator and crystal oven for precise crystal temperature control. When the counter is equipped with the optional time base, all standard time base components are removed. The signal is fed to pin 1 of J1432.

External Clock

An external clock can be fed through terminal 14A of the rear interface connector. This signal passes to the base of Q1290, which amplifies the signal and delivers it to the internal-external selection jumpers. Diode CR1290 prevents capacitor C1290 from charging due to rectification of the external clock signal by the base-emitter junction of Q1290. This diode also protects Q1290 from negative transients.

When the internal clock is used, jumper J1290 must be connected between pins 4 and 5. This allows U1190 to operate as a divide-by-ten counter feeding 1 MHz clock signals to U1170 and S1380-5. If the external clock signal is a frequency other than 10 MHz, change the jumper on J1290 to either the 1 MHz or 5 MHz position, depending on the frequency of the external clock. Changing the jumper on J1290 to the 5 MHz position takes the output from U1190, after passing through the divide-by-five counter. The divider, U1190, is bypassed when the shorting strap for J1290 is between pins 1 and 2.

Gate Generating Circuitry

This circuitry provides the proper gating waveforms for timing the counting and display cycles. In the direct mode of operation the 1 MHz clock signal passes through S1380-5 to the external input of U1280, a programmed divider. In the prescale mode of operation, the 1 MHz clock signal is divided by eight to 125 kHz by U1170. This is done because the prescaler also divides the incoming signal by eight. This keeps the display in the correct units. In the prescale mode, the output of U1170 is fed to the input of U1280 through S1380-6. The clear pulse, at pin 3, resets U1170 to all nines. Pin 2 of U1170 and pin 13 of U1270B are held high by R1385 connected to +5 V.

The 1 MHz or 125 kHz clock signal is fed to the external input terminal of U1280. The clock frequency is divided by U1280 so that the frequency of the signal at pin 1 is the clock frequency divided by the selected divider ratio. See Table 6-1. Pin 1 of U1280 connects to the D input of U1270B. The clock is inverted by Q1182 and fed to the clock input of U1270B. Pin 1 of U1280 goes low at the end of the selected clock division. On the next negative-going clock pulse, pin 8 of U1270B goes high. The purpose of U1270 is to prevent any time jitter on the pulse at pin 1 of U1280 from transferring to pin 8 of U1270B.

Refer to the timing diagram, located in the pullout pages at the rear of this manual. The clear pulse goes high at the beginning of the gate-latch-display cycle. Pin 1 of U1280 goes to the high state. The clear at pin 10 of U1270B goes low when the clear to pin 6 of U1280 goes high, causing pin 8 of U1270B to go low. The clear pulse also causes pin 2 of U1740A to go high, which causes pin 14 of U1740B to go low, because of the high on the set (pin 12) of U1740B. This action causes a high on pin 11 and a low on pin 10 of U1760. Pin 14 of U1760 is now low as well as of U1760. In the nontotalize modes, pin 12 of U1760 is low, and S1380-1 is open. Pin 15 of U1760 is in the high state and the base of Q1660 in the low state. The collector of Q1660 is high and neither of the gate waveforms are asserted. Counter U1280 is now at the highest state.

Table 6-1

Resolution	Clock Divider Ratio, U1280	Input Code for U1280				Gate Times
		Pin 11	Pin 12	Pin 13	Pin 14	
		2^3	2^2	2^1	2^0	
.1 Hz	10^7	0	1	1	1	10 s
1 Hz	10^6	0	1	1	0	1 s
10 Hz	10^5	0	1	0	1	.1 s
100 Hz	10^4	0	1	0	0	10 ms
1 kHz	10^3	0	0	1	1	1 ms
100 kHz[a]	10^1	0	0	0	1	1 μs

[a] Option 7 instruments only. See Options section.

The positive-going clear pulse is approximately 60 μs wide. On the next negative-going 1 MHz clock transition, pin 1 of U1280 goes low. The counter is now in its lowest state. This action sets the D terminal, pin 12, of U1270B low. The next negative-going 1 MHz clock transition causes a high on pin 8 of U1270B. This low-to-high transition causes pin 2 of U1740A to go low, which causes pin 15 of U1760 to go low and pin 9 to go high, asserting the $\overline{\text{gate}}$ signal.

If the selected resolution is 1 Hz, U1280 will divide by 10^6. After one half (10^3) of the counts are completed, the time-out connection, pin 1, of U1280 goes high. On the next negative-going 1 MHz clock pulse, pin 8 of U1270B goes low and stays low until the end of the gate cycle. After the last half of the counts are completed by U1280, the time-out goes low. On the next negative-going 1 MHz clock transition pin 8 of U1270B goes high. This action causes pin 14 of U1740B to go high which causes $\overline{\text{gate}}$ to go high completing the gate cycle.

Display Timer

During the time the $\overline{\text{gate}}$ is low, pin 11 of U1533D is high and unijunction transistor Q1732 is not conducting. When pin 11 of U1533D is high, Q1632 conducts turning on the front panel GATE light. Transistor Q1640, in conjunction with C1640, serves as a pulse stretcher so that the GATE light is visible even for very short gate times.

During the gate time, Q1733 conducts. At the end of the gate time, Q1733 ceases conduction and the emitter of unijunction transistor Q1732 goes positive at a rate determined by the setting of the DISPLAY TIME control and the value of C1630. When the emitter of Q1732 reaches about 7.5 V, Q1732 conducts discharging C1630 through R1739. This action causes a positive-going short pulse at the base of Q1630 and a corresponding negative-going pulse at the collector of Q1630. This negative-going signal, at the collector of Q1630, is also duplicated by pushing the front panel RESET pushbutton or by the closure of switch contact S1380-12 when switching between the various resolution ranges. The low at pins 11 and 12 of U1532 causes a high at pin 13 and a low at pin 1 of U1532A. The signal at pin 1 of U1532A stays low for the time required for C1630 to discharge and then returns to the high state. On the low-to-high transition at pin 12 of U1530B, pin 9 of U1530B outputs a TTL low lasting about 60 μs. This action also causes pin 6 of U1533B to output a 60 μs high TTL pulse which is the clear pulse.

As mentioned earlier, when the reset button is pressed or contact S1380-12 closes, the clear is asserted. Pushing the reset button lowers pin 5 of U1533B causing pin 6 to go high. When the $\overline{\text{RESET}}$ line goes high, U1530B triggers through diode CR1550.

The power-up reset provides a clear pulse upon power up and increases the duration of the clear pulse initiated by the manual reset. When voltage is first applied to the instrument, C1160 charges toward +5 V. This causes Q1160 to conduct, lowering the voltage at the anode of Q1160. This negative voltage at the anode of Q1160 couples to the base of Q1152 through C1168. This causes Q1152 and Q1154 to conduct which pulls the RESET line low. Feedback to the base of Q1152 through C1250 causes Q1152 and Q1154 to remain in conduction for about 100 ms.

Count Processing Circuitry

The $\overline{\text{gate}}$ appears at pin 7 of U1660A. The clock signal appears at pin 9. When the gate signal is low, the negative to positive-going clock transition causes a low at pin 2 of U1660A. In the totalize mode, the U1660A reset (pin 4) is held high by switch S1380-1 continuously enabling the input of U1660B. The clear pulse at pin 5 of U1660A causes the Q output to go high and remain high for the duration of the clear signal. When pin 11 of U1660B is low, the low to high input signal transitions at pin 9 are counted by U1660B. This action effectively divides the input signal at the clock terminal by two during gate-on time. The $\overline{\text{Q}}$ output signal, from U1660B, passes to the emitter of Q1642 which converts from ECL to TTL logic levels. The signal passes to pin 26 of U1330 as the least significant bit for the least significant digit of the display.

Integrated circuit U1330 is a bcd counter and nine digit display multiplexer. The ninth (lsd), eighth, seventh and sixth digits are counted and converted to bcd format by counters external to U1330. For the fifth through the first (msd) digits, U1330 counts and seven-segment decodes the appropriate information. The sixth and seventh digits are counted by U1440 and the eighth digit by U1430. Integrated circuit U1330 also contains nine decades of latches which latch the output of the external and internal bcd counters. Integrated circuit U1330 also contains a nine digit multiplexer. The input signal for U1430, at pin 14, comes from the collector (most significant bit) of Q1643 as a TTL signal. This signal is the most significant bit from the least significant digit of the display. The clear signal inputs at pin 2. The most significant bit from the eighth decade at pin 11 of U1430 drives the input of a dual decade counter, U1440. The input to the A section divide-by-two is pin 1. The output of this divide-by-two section is

the least significant bit of the seventh decade and drives the input of the B section divide-by-five counter. These outputs form the second, third, and fourth binary lines for the seventh decade. The most significant bit line, pin 7, connects to the input of the A2 section divide-by-two counter at pin 15. The output of the second section divide-by-two counter, pin 13, connects to the second section divide-by-five counter which inputs bcd information for the sixth digit to U1330. The most significant bit for the sixth decade drives the base of Q1460, a TTL to MOS converter. The signal feeds the remaining five decades of bcd counters, contained in U1330, through pin 5. The clear pulse resets all counters to 0 and inputs to U1430 at pin 2, U1440 at pins 14 and 2 and U1330 at pin 6.

When the $\overline{\text{gate}}$ goes high, at the end of the measurement interval, pin 10 of U1533C goes high. This causes pin 8 to go low which fires U1530A, a one shot multivibrator. Pin 7 of U1530A goes low for about 20 μs causing, when S1380-7 is open, pin 3 of U1533A to go high for the same period. When pin 3 goes low again, after 20 μs, the falling edge at pin 11 of U1330 stores the accumulated bcd count in the latches contained in U1330.

The scan clock, an astable multivibrator composed of Q1350 and Q1352, runs continuously. On each negative-going excursion at pin 8 of U1330, the bcd output data from the latches in U1330 changes for the next digit displayed. This bcd data is present at pins 13, 14, 16, and 17 of U1330. Integrated circuit U1130 decodes this bcd information for the seven segment LED displays.

The respective digit line, $\overline{\text{D1}}$ through $\overline{\text{D9}}$ is low while the bcd information is present. The appropriate seven lines to the segments of the display modules connect to the cathodes of the light emitting diodes in the modules. The respective digit line for the digit to be displayed, D1 through D9, then goes low. This action raises the collectors of one of the nine transistors connected to the anodes of the appropriate segments of the digit. This illuminates the digit.

The D4 through D8 digit select lines also activate the decimal points in the corresponding digits through portions of S1380 RESOLUTION and S1570 RESOLN MULT switches. When the digit select lines for the respective digit goes low, depending on the resolution chosen, pin 9 of U1230D goes low. Pin 8 then goes low, activating the decimal point for that digit.

Leading Zero Blanking

The digits are scanned from the most significant digit to the least significant digit (left to right). Time slot zero, $\overline{\text{DX}}$, at pin 20 of U1330 precedes the most significant digit. This pin goes low before $\overline{\text{D1}}$. Flip flop U1230C buffers $\overline{\text{DX}}$ and resets pin 9 of U1360B low. Pin 5 of U1130, the ripple blanking input of U1130, is set low, blanking the display. If there are zeros on the bcd lines from U1330 to pin 4 of U1130, the blanking-input-ripple-blanking-output line (pin 4) goes low. The low (for leading zeros) goes to pin 12 of U1360B. On the next rising edge from Q1352 (scan clock), the low is clocked to the Q output (pin 9, which remains low) and passes to pin 5 of U1130 keeping the displayed digit blanked. This action continues as long as leading zeros are present, until a decimal point is needed, or D9 is enabled in the totalize mode.

If a decimal point is required after the leading zeros are blanked, pin 11 of U1260C goes low. This creates a high on pin 8 which in turn ensures a low on pin 6 of U1260B. This action causes pin 9 to go high unblanking the display for the decimal point and all digits to the right of the decimal point. If a nonzero digit follows the leading zero(s), pin 4 of U1130 is internally driven high. This places a high on the D input to U1360B. The next rising edge from the scan clock transfers this high to the Q output and unblanks the display through internal action in U1130.

The D9 digit is never blanked except when the unit is operating in the prescale mode and the input signal is out of range. (INPUT OUT OF RANGE light is illuminated.) This is insured through the D9 strobe line at pin 13 of U1260A. When pin 13 of U1260A goes low, pin 12 goes high ensuring a low at pin 6 of U1260B. This sets pin 9 of U1360 high, unblanking the display through U1130.

In the case of overflow it is necessary to ensure that no blanking occurs. When overflow occurs pin 19 of U1330 goes low. The collector of Q1172 goes high, illuminating the OVERFLOW light through Q1170 placing a high on pin 5 of U1260B. This ensures a low on pin 6 of U1260B and pin 10 of U1360B. This action causes a high on pin 9, which unblanks the display.

Prescaler Unblanking

When the prescaler input is out of range, pin 4 of U1270A goes low. This illuminates the INPUT OUT OF RANGE light through CR1362 and sets U1270A placing a high on the Q output, pin 5. On the rising edge of the latch pulse Q, pin 6 of U1360A, is clocked low blanking the display through diode CR1360 and U1130. This action also causes the data good line to remain low, indicating that the data in the latches in U1330 and present on the bcd lines from U1330 to U1130 and at the rear interface is not valid data.

Power Supplies

Integrated circuit U1510 supplies the reference voltage for the +5 V and −15 V supplies. The +15 V operates from U1112, which provides its own reference voltage. The −2 V supply is referenced to the −15 V supply.

The +5 V reference voltage from U1510 appears internally from U1510 at pin 6. This is divided by R1612 and R1714 to pin 5. Current flows from the +11.5 V mainframe supply, through the npn series-pass transistor in the mainframe, and through R1710 (the current sensing resistor) to the +5 V load. The +5 V load voltage is regulated within design limits by varying the voltage on the base of the series-pass transistor in the mainframe through U1510. Should current to the +5 V load exceed about 2 A, voltage drop across R1710 becomes great enough to limit the current by reducing the voltage on the base of the series-pass transistor in the mainframe. This over-current voltage is sensed at pins 2 and 3 of U1510. Feedback input from +5 V for voltage regulation occurs at pin 4. Capacitor C1522 is used to frequency compensate U1510.

The −15 V supply is referenced, at the base of Q1522, from +5 V at pin 6 of U1510. Should the voltage across the −15 V load go slightly more positive, the voltage at the base of Q1522 goes more positive. This action increases conduction in Q1624, which increases conduction in the series-pass transistor located in the mainframe. More current now flows through the series-pass transistor lowering the −15 V until the correct voltage is reached. If the current drawn from this supply exceeds about 200 mA, the voltage drop across R1726 becomes large enough to cause Q1623 to conduct. This action effectively limits the current through the series-pass transistor.

Reference voltage for the −2 V supply comes from the −15 V supply, at pin 3 of U1520. Should the −2 V go more positive, pin 6 of U1520 goes more negative, increasing conduction through Q1620, and lowering the −2 V to the correct level. Excessive current through R1729 reduces conduction through Q1620 by increasing conduction through Q1730. This action limits the current to about 150 mA.

The +15 V supply operates from a three terminal regulator, U1112.

Clamp diodes CR1120, CR1710, CR1722, and CR1720 are connected to the voltage output buses to prevent component damage due to reverse polarity.

OPTIONS

OPTION 1

This option provides a more accurate time base for the DC 508. The specification, adjustment instructions, circuit description, and schematic diagrams are included in the respective sections of this manual. In instruments equipped with this option, for proper operation, make certain the power module line-voltage selector is set correctly for the line voltage used.

OPTION 7

Introduction

The DC 508 Option 7 operates with a spectrum analyzer and a tracking generator, or other suitable device, to provide an accurate readout of a selected frequency. During the DC 508 frequency measurement interval, a dot on the swept frequency display shows the location of the frequency being measured. At the conclusion of the count, the sweep is resumed. The accuracy of the count is 100 kHz when the spectrum analyzer is not phase locked, and manually selected by the RESOLUTION control when the phase lock is on.

The DC 508 Option 7 also includes the higher accuracy and stability for the counter's internal time base described under Option 1. The specification, adjustment instructions, and schematic diagrams are included in the respective sections of this manual. The installation, operating instructions, and circuit description follow.

Installation

The DC 508 Option 7 Digital Counter and signal source must be installed in specific compartments of a TM 500-series power module equipped with Option 7. This option adds the wires necessary to interface the two units via their rear panel connectors. If Option 7 is not ordered with the power module, it can be field-installed by ordering Field Modification Kit 040-0789-00.

Connect the DC 508 input (either direct or prescale INPUT) to the signal source output with a coaxial cable (standard accessory).

The operation of the DC 508 Option 7 in a system without a tracking generator or sweep generator, or in a power module without Option 7, is the same as a standard DC 508 with Option 1 installed.

Sweeping Mode Operation

In any of the sweeping modes, operation of the DC 508 Option 7 is as follows:

1. The DISPLAY TIME control is inoperative.

2. The RESOLUTION control is set for the resolution desired when the spectrum analyzer is phase locked.

3. When the spectrum analyzer is not phase locked, the counter resolution is automatically set for 100 kHz.

The spectrum analyzer will sweep until it reaches the level set by the TR 502 Sweep Trigger Level adjustment. The trigger output then turns the spectrum analyzer sweep off, which causes the spectrum analyzer to stay at midfrequency. After a short settling time, the tracking generator sends a count command to the counter, which returns a gate signal to the spectrum analyzer for the count duration. This causes an intensified dot to be displayed on the crt showing the location of the frequency count on the display. At the end of the count, the sweep continues from the dot frequency.

Operation of the DC 508 with the SW 503 is similar except the sweep is stopped when the generator reaches the point defined by the DOT POSITION control.

NOTE

When the signal source is operating in the swept mode, the first DC 508 count after the RESOLUTION control is changed or the RESET button is pushed may be erroneous and should be disregarded.

Nonsweeping Mode Operation

In this mode, the spectrum analyzer sweep (and hence the tracking generator frequency) is controlled either manually or by an external signal. The DC 508 Option 7 gate time will be determined in the same manner as above (either automatically or specifically set). The gate cycles continuously at a frequency determined by the DISPLAY TIME control. The gate can also be initiated by the RESET button. Further details of operation are included in the TR 502 and SW 503 Instruction Manuals.

Circuit Description

The $\overline{\text{latch}}$ pulse (pin 7, U1530A) from the DC 508 sets the Q output, pin 11 of U4330, high. A start count high is received at rear interface pin 18B. This transfers to pin 5 of U4240C, is inverted, and clears U4330, through pin 6. This causes pin 5 of U4340B to go low producing a $\overline{\text{gate}}$ signal to the external equipment and also causes pin 4 of U4340B to go high. The gate generator is started for another measurement cycle. If rear interface connector pin 15B is held low, pin 4 of U4340B is held high and the DC 508 counts continuously.

When rear interface pins 14B and 16B are both low, the DC 508 is held to a gate time of 10 μs with a resolution of 100 kHz. Lows on pins 8 and 9 of U1532C cause a high on pin 10. This translates to a low on pin 10 of U4240E. This in turn causes lows on pin 3 of U4140A, 12 of U4340D and 9 of U4340C. The low on pin 3 of U4140A ensures a high on pin 14 of U1280. The high on pin 10 of U1532C ensures lows on pins 9 and 11 of U4140C and D, respectively. This action, irrespective of the RESOLUTION switch setting, sets the divider ratio of U1280 to 10^1, which results in a gate time of 10 μs. If either rear interface pin 14B or 16B, is not low, the logic of the circuit just described is reversed and the RESOLUTION switch controls the divider ratio of U1280. In this case inverter U4240F ensures that pin 14 of U1280 is low or high as determined by the RESOLUTION switch. The high on pin 10 of U1532C ensures a low on pin 4 of U4140B, which illuminates the MHz light on the front panel. The low on pin 9 of U4340C ensures a high on pin 10, turning off the front panel kHz light. Inverter U4240D causes the kHz light to operate properly when the unit is not operating in the 100 kHz resolution mode.

In the 10 μs gate mode, the decimal point is fixed in the least significant digit module (time slot 9). Pin 2 of U4340A is high and pin 3 goes high when the D9 digit strobe appears. This action causes pin 1 to go low, illuminating the decimal point. When the 100 kHz resolution mode is deactivated, U4340A deactivates and pin 13 of U4340D goes low as determined by the decimal point select switches, activated through U4240B and U4340D.

REPLACEABLE ELECTRICAL PARTS

PARTS ORDERING INFORMATION

Replacement parts are available from or through your local Tektronix, Inc. Field Office or representative.

Changes to Tektronix instruments are sometimes made to accommodate improved components as they become available, and to give you the benefit of the latest circuit improvements developed in our engineering department. It is therefore important, when ordering parts, to include the following information in your order: Part number, instrument type or number, serial number, and modification number if applicable.

If a part you have ordered has been replaced with a new or improved part, your local Tektronix, Inc. Field Office or representative will contact you concerning any change in part number.

Change information, if any, is located at the rear of this manual.

SPECIAL NOTES AND SYMBOLS

X000	Part first added at this serial number
00X	Part removed after this serial number

ITEM NAME

In the Parts List, an Item Name is separated from the description by a colon (:). Because of space limitations, an Item Name may sometimes appear as incomplete. For further Item Name identification, the U.S. Federal Cataloging Handbook H6-1 can be utilized where possible.

ABBREVIATIONS

ACTR	ACTUATOR	PLSTC	PLASTIC
ASSY	ASSEMBLY	QTZ	QUARTZ
CAP	CAPACITOR	RECP	RECEPTACLE
CER	CERAMIC	RES	RESISTOR
CKT	CIRCUIT	RF	RADIO FREQUENCY
COMP	COMPOSITION	SEL	SELECTED
CONN	CONNECTOR	SEMICOND	SEMICONDUCTOR
ELCTLT	ELECTROLYTIC	SENS	SENSITIVE
ELEC	ELECTRICAL	VAR	VARIABLE
INCAND	INCANDESCENT	WW	WIREWOUND
LED	LIGHT EMITTING DIODE	XFMR	TRANSFORMER
NONWIR	NON WIREWOUND	XTAL	CRYSTAL

CROSS INDEX—MFR. CODE NUMBER TO MANUFACTURER

Mfr. Code	Manufacturer	Address	City, State, Zip
000BG	SCHADOW SWITCHES	8081 WALLACE ROAD	EDEN PRAIRIE, MN 55343
0000L	MATSUHITA ELECTRIC	200 PARK AVENUE, 54TH FLOOR	NEW YORK, NY 10017
01121	ALLEN-BRADLEY COMPANY	1201 2ND STREET SOUTH	MILWAUKEE, WI 53204
01295	TEXAS INSTRUMENTS, INC., SEMICONDUCTOR GROUP	P O BOX 5012, 13500 N CENTRAL EXPRESSWAY	DALLAS, TX 75222
02735	RCA CORPORATION, SOLID STATE DIVISION	ROUTE 202	SOMERVILLE, NY 08876
03508	GENERAL ELECTRIC COMPANY, SEMI-CONDUCTOR PRODUCTS DEPARTMENT	ELECTRONICS PARK	SYRACUSE, NY 13201
03888	KDI PYROFILM CORPORATION	60 S JEFFERSON ROAD	WHIPPANY, NJ 07981
04713	MOTOROLA, INC., SEMICONDUCTOR PROD. DIV.	5005 E MCDOWELL RD,PO BOX 20923	PHOENIX, AZ 85036
05091	TRI-ORDINATE CORPORATION	343 SNYDER AVENUE	BERKELEY HEIGHTS, NJ 07922
07263	FAIRCHILD SEMICONDUCTOR, A DIV. OF FAIRCHILD CAMERA AND INSTRUMENT CORP.	464 ELLIS STREET	MOUNTAIN VIEW, CA 94042
07910	TELEDYNE SEMICONDUCTOR	12515 CHADRON AVE.	HAWTHORNE, CA 90250
12697	CLAROSTAT MFG. CO., INC.	LOWER WASHINGTON STREET	DOVER, NH 03820
16546	U.S. CAPACITOR CORP/CENTRALAB ELECTRONICS DIV.	4561 COLORADO	LOS ANGELES, CA 90039
18324	SIGNETICS CORP.	811 E. ARQUES	SUNNYVALE, CA 94086
24931	SPECIALTY CONNECTOR CO., INC.	3560 MADISON AVE.	INDIANAPOLIS, IN 46227
27014	NATIONAL SEMICONDUCTOR CORP.	2900 SEMICONDUCTOR DR.	SANTA CLARA, CA 95051
28480	HEWLETT-PACKARD CO., CORPORATE HQ.	1501 PAGE MILL RD.	PALO ALTO, CA 94304
32159	WEST-CAP ARIZONA	2201 E. ELVIRA ROAD	TUCSON, AZ 85706
32997	BOURNS, INC., TRIMPOT PRODUCTS DIV.	1200 COLUMBIA AVE.	RIVERSIDE, CA 92507
33096	COLORADO CRYSTAL CORPORATION	2303 W 8TH STREET	LOVELAND, CO 80537
50088	MOSTEK CORP.	1400 UPFIELD DR.	CARROLLTON, TX 75006
50522	MONSANTO CO., ELECTRONIC SPECIAL PRODUCTS	3400 HILLVIEW AVENUE	PALO ALTO, CA 94304
50579	LITRONIX INC.	19000 HOMESTEAD RD.	CUPERTINO, CA 95014
52262	B AND H ELECTRONICS, INC., DBA MICRO COMPONENTS ASSOCIATES	202 E STEVENS ST., SUITE 6	SANTA ANA, CA 92707
56289	SPRAGUE ELECTRIC CO.		NORTH ADAMS, MA 01247
72982	ERIE TECHNOLOGICAL PRODUCTS, INC.	644 W. 12TH ST.	ERIE, PA 16512
74970	JOHNSON, E. F., CO.	299 10TH AVE. S. W.	WASECA, MN 56093
75915	LITTELFUSE, INC.	800 E. NORTHWEST HWY	DES PLAINES, IL 60016
76493	BELL INDUSTRIES, INC., MILLER, J. W., DIV.	19070 REYES AVE., P O BOX 5825	COMPTON, CA 90224
80009	TEKTRONIX, INC.	P O BOX 500	BEAVERTON, OR 97077
91637	DALE ELECTRONICS, INC.	P. O. BOX 609	COLUMBUS, NE 68601

Ckt No.	Tektronix Part No.	Serial/Model No. Eff	Dscont	Name & Description	Mfr Code	Mfr Part Number
A1	670-5102-00			CKT BOARD ASSY:MAIN OPT. 7	80009	670-5102-00
A1	670-5345-00			CKT BOARD ASSY:MAIN OPT. 1	80009	670-5345-00
A1	670-5427-00			CKT BOARD ASSY:MAIN	80009	670-5427-00
A2	670-5352-00			CKT BOARD ASSY:RESOLUTION MULTIPLIER OPT. 7	80009	670-5352-00
A2	670-5103-00			CKT BOARD ASSY:RESOLUTION MULTIPLIER	80009	670-5103-00
A3	670-5101-00			CKT BOARD ASSY:DISPLAY	80009	670-5101-00
A4	670-5104-00			CKT BOARD ASSY:PRE-SCALE	80009	670-5104-00
C1110[1,2]	281-0775-00			CAP.,FXD,CER DI:0.1UF,20%,50V	72982	8005D9AABZ5U104M
C1112[1,2]	281-0775-00			CAP.,FXD,CER DI:0.1UF,20%,50V	72982	8005D9AABZ5U104M
C1113	281-0775-00			CAP.,FXD,CER DI:0.1UF,20%,50V	72982	8005D9AABZ5U104M
C1114	281-0775-00			CAP.,FXD,CER DI:0.1UF,20%,50V	72982	8005D9AABZ5U104M
C1130	281-0775-00			CAP.,FXD,CER DI:0.1UF,20%,50V	72982	8005D9AABZ5U104M
C1132[1,2]	290-0667-00			CAP.,FXD,ELCTLT:330UF,+75-10%,50V	56289	500D158
C1150	290-0776-00			CAP.,FXD,ELCTLT:22UF,+50-10%,10V	0000L	ECE-A10V22L
C1160	290-0776-00			CAP.,FXD,ELCTLT:22UF,+50-10%,10V	0000L	ECE-A10V22L
C1168	281-0775-00			CAP.,FXD,CER DI:0.1UF,20%,50V	72982	8005D9AABZ5U104M
C1220	281-0775-00			CAP.,FXD,CER DI:0.1UF,20%,50V	72982	8005D9AABZ5U104M
C1230[1,2]	290-0667-00			CAP.,FXD,ELCTLT:330UF,+75-10%,50V	56289	500D158
C1250	290-0776-00			CAP.,FXD,ELCTLT:22UF,+50-10%,10V	0000L	ECE-A10V22L
C1290	283-0000-00			CAP.,FXD,CER DI:0.001UF,+100-0%,500V	72982	831-516E102P
C1292	281-0775-00			CAP.,FXD,CER DI:0.1UF,20%,50V	72982	8005D9AABZ5U104M
C1310	281-0081-00			CAP.,VAR,AIR DI:1.8-13PF,375VDC	74970	189-6-5
C1354	281-0772-00			CAP.,FXD,CER DI:0.0047UF,10%,100V	72982	8005H9AADW5R472K
C1356	281-0772-00			CAP.,FXD,CER DI:0.0047UF,10%,100V	72982	8005H9AADW5R472K
C1420	281-0811-00			CAP.,FXD,CER DI:10PF,10%,100V	72982	8035D2AADC1G100K
C1421	281-0775-00			CAP.,FXD,CER DI:0.1UF,20%,50V	72982	8005D9AABZ5U104M
C1422	281-0564-00			CAP.,FXD,CER DI:24PF,5%,500V	72982	301-000C0G0240J
C1423	281-0630-00			CAP.,FXD,CER DI:390PF,5%,500V	72982	630000Y5D391J
C1424	281-0630-00			CAP.,FXD,CER DI:390PF,5%,500V	72982	630000Y5D391J
C1426	281-0773-00			CAP.,FXD,CER DI:0.01UF,10%,100V	72982	8005H9AADW5R103K
C1430	281-0772-00			CAP.,FXD,CER DI:0.0047UF,10%,100V	72982	8005H9AADW5R472K
C1440	281-0775-00			CAP.,FXD,CER DI:0.1UF,20%,50V	72982	8005D9AABZ5U104M
C1454	281-0775-00			CAP.,FXD,CER DI:0.1UF,20%,50V	72982	8005D9AABZ5U104M
C1456	281-0775-00			CAP.,FXD,CER DI:0.1UF,20%,50V	72982	8005D9AABZ5U104M
C1510	281-0773-00			CAP.,FXD,CER DI:0.01UF,10%,100V	72982	8005H9AADW5R103K
C1512	281-0773-00			CAP.,FXD,CER DI:0.01UF,10%,100V	72982	8005H9AADW5R103K
C1522	281-0812-00			CAP.,FXD,CER DI:1000PF,10%,100V	72982	8035D9AADX7R102K
C1526	281-0775-00			CAP.,FXD,CER DI:0.1UF,20%,50V	72982	8005D9AABZ5U104M
C1546	281-0775-00			CAP.,FXD,CER DI:0.1UF,20%,50V	72982	8005D9AABZ5U104M
C1569	281-0775-00			CAP.,FXD,CER DI:0.1UF,20%,50V	72982	8005D9AABZ5U104M
C1580	281-0775-00			CAP.,FXD,CER DI:0.1UF,20%,50V	72982	8005D9AABZ5U104M
C1585	290-0718-00			CAP.,FXD,ELCTLT:22UF,20%,35V	56289	196D226X0035PE4
C1586	281-0773-00			CAP.,FXD,CER DI:0.01UF,10%,100V	72982	8005H9AADW5R103K
C1589	281-0785-00			CAP.,FXD,CER DI:68PF,10%,100V	72982	8035D2AADC0G680K
C1590	290-0804-00			CAP.,FXD,ELCTLT:10UF,+50-10%,25V	56289	502D(ADVISE)
C1592	281-0662-00			CAP.,FXD,CER DI:10PF,+/-0.5PF,500V	72982	301-000H3M0100D
C1593	290-0720-00			CAP.,FXD,ELCTLT:68UF,20%,15V	56289	196D686X0015PE3
C1594	281-0574-00			CAP.,FXD,CER DI:82PF,10%,500V	72982	308000S2H820K
C1596	281-0775-00			CAP.,FXD,CER DI:0.1UF,20%,50V	72982	8005D9AABZ5U104M
C1630	290-0804-00			CAP.,FXD,ELCTLT:10UF,+50-10%,25V	56289	502D(ADVISE)
C1634	281-0775-00			CAP.,FXD,CER DI:0.1UF,20%,50V	72982	8005D9AABZ5U104M
C1636	281-0772-00			CAP.,FXD,CER DI:0.0047UF,10%,100V	72982	8005H9AADW5R472K

[1]Option 1
[2]Option 7

Ckt No.	Tektronix Part No.	Serial/Model No. Eff	Dscont	Name & Description	Mfr Code	Mfr Part Number
C1640	281-0775-00			CAP.,FXD,CER DI:0.1UF,20%,50V	72982	8005D9AABZ5U104M
C1673	281-0785-00			CAP.,FXD,CER DI:68PF,10%,100V	72982	8035D2AADC0G680K
C1690	283-0189-00			CAP.,FXD,CER DI:0.1UF,20%,400V	72982	8151N401C104M
C1710	290-0746-00			CAP.,FXD,ELCTLT:47UF,+50-10%,16V	56289	502D226
C1712	281-0775-00			CAP.,FXD,CER DI:0.1UF,20%,50V	72982	8005D9AABZ5U104M
C1720	290-0779-00			CAP.,FXD,ELCTLT:10UF,+50-10%,50VDC	56289	502D237
C1728	281-0773-00			CAP.,FXD,CER DI:0.01UF,10%,100V	72982	8005H9AADW5R103K
C1730	290-0776-00			CAP.,FXD,ELCTLT:22UF,+50-10%,10V	0000L	ECE-A10V22L
C1756	281-0775-00			CAP.,FXD,CER DI:0.1UF,20%,50V	72982	8005D9AABZ5U104M
C1774	281-0775-00			CAP.,FXD,CER DI:0.1UF,20%,50V	72982	8005D9AABZ5U104M
C1790	290-0720-00			CAP.,FXD,ELCTLT:68UF,20%,15V	56289	196D686X0015PE3
C1792	290-0804-00			CAP.,FXD,ELCTLT:10UF,+50-10%,25V	56289	502D(ADVISE)
C2110	283-0324-00			CAP.,FXD,CER DI:0.01PF,20%,50V	72982	A01AA9AZLW5R103Z
C2121	283-0324-00			CAP.,FXD,CER DI:0.01PF,20%,50V	72982	A01AA9AZLW5R103Z
C2122	281-0812-00			CAP.,FXD,CER DI:1000PF,10%,100V	72982	8035D9AADX7R102K
C2127	283-0252-00			CAP.,FXD,CER DI:1000PF,10%,50V	72982	A01AL0A2LW5R102K
C2128	283-0353-00			CAP.,FXD,CER DI:0.1UF,10%,50V	16546	W050FH104KPSS
C2131	283-0324-00			CAP.,FXD,CER DI:0.01PF,20%,50V	72982	A01AA9AZLW5R103Z
C2133	281-0812-00			CAP.,FXD,CER DI:1000PF,10%,100V	72982	8035D9AADX7R102K
C2137	283-0252-00			CAP.,FXD,CER DI:1000PF,10%,50V	72982	A01AL0A2LW5R102K
C2141	283-0324-00			CAP.,FXD,CER DI:0.01PF,20%,50V	72982	A01AA9AZLW5R103Z
C2143	281-0812-00			CAP.,FXD,CER DI:1000PF,10%,100V	72982	8035D9AADX7R102K
C2147	283-0252-00			CAP.,FXD,CER DI:1000PF,10%,50V	72982	A01AL0A2LW5R102K
C2148	283-0353-00			CAP.,FXD,CER DI:0.1UF,10%,50V	16546	W050FH104KPSS
C2151	283-0324-00			CAP.,FXD,CER DI:0.01PF,20%,50V	72982	A01AA9AZLW5R103Z
C2153	281-0812-00			CAP.,FXD,CER DI:1000PF,10%,100V	72982	8035D9AADX7R102K
C2157	283-0252-00			CAP.,FXD,CER DI:1000PF,10%,50V	72982	A01AL0A2LW5R102K
C2160	283-0324-00			CAP.,FXD,CER DI:0.01PF,20%,50V	72982	A01AA9AZLW5R103Z
C2212	283-0252-00			CAP.,FXD,CER DI:1000PF,10%,50V	72982	A01AL0A2LW5R102K
C2214	283-0252-00			CAP.,FXD,CER DI:1000PF,10%,50V	72982	A01AL0A2LW5R102K
C2240	283-0252-00			CAP.,FXD,CER DI:1000PF,10%,50V	72982	A01AL0A2LW5R102K
C2246	283-0324-00			CAP.,FXD,CER DI:0.01PF,20%,50V	72982	A01AA9AZLW5R103Z
C2250	283-0252-00			CAP.,FXD,CER DI:1000PF,10%,50V	72982	A01AL0A2LW5R102K
C2322	283-0324-00			CAP.,FXD,CER DI:0.01PF,20%,50V	72982	A01AA9AZLW5R103Z
C2324	281-0773-00			CAP.,FXD,CER DI:0.01UF,10%,100V	72982	8005H9AADW5R103K
C2330	283-0252-00			CAP.,FXD,CER DI:1000PF,10%,50V	72982	A01AL0A2LW5R102K
C2332	281-0775-00			CAP.,FXD,CER DI:0.1UF,20%,50V	72982	8005D9AABZ5U104M
C2336	281-0775-00			CAP.,FXD,CER DI:0.1UF,20%,50V	72982	8005D9AABZ5U104M
C2340	281-0775-00			CAP.,FXD,CER DI:0.1UF,20%,50V	72982	8005D9AABZ5U104M
C2344	283-0324-00			CAP.,FXD,CER DI:0.01PF,20%,50V	72982	A01AA9AZLW5R103Z
C2350	283-0324-00			CAP.,FXD,CER DI:0.01PF,20%,50V	72982	A01AA9AZLW5R103Z
C2352	283-0324-00			CAP.,FXD,CER DI:0.01PF,20%,50V	72982	A01AA9AZLW5R103Z
C2354	283-0324-00			CAP.,FXD,CER DI:0.01PF,20%,50V	72982	A01AA9AZLW5R103Z
C2356	283-0324-00			CAP.,FXD,CER DI:0.01PF,20%,50V	72982	A01AA9AZLW5R103Z
C2360	283-0324-00			CAP.,FXD,CER DI:0.01PF,20%,50V	72982	A01AA9AZLW5R103Z
C2362	283-0311-00			CAP.,FXD,CER DI:4.7PF,+/-0.25PF,100V	72982	A02AL4AALC0G479C
C2430	283-0324-00			CAP.,FXD,CER DI:0.01PF,20%,50V	72982	A01AA9AZLW5R103Z
C2460	283-0324-00			CAP.,FXD,CER DI:0.01PF,20%,50V	72982	A01AA9AZLW5R103Z
C2464	283-0324-00			CAP.,FXD,CER DI:0.01PF,20%,50V	72982	A01AA9AZLW5R103Z
C4120	283-0194-00			CAP.,FXD,CER DI:4.7UF,20%,50V	72982	8151N057Z5U0475M
C4122	281-0775-00			CAP.,FXD,CER DI:0.1UF,20%,50V	72982	8005D9AABZ5U104M
C4130	281-0638-00			CAP.,FXD,CER DI:240PF,5%,500V	72982	301000Z5D241J
C4132	281-0814-00			CAP.,FXD,CER DI:100PF,10%,100V	72982	8005D2AADC1G101K

Ckt No.	Tektronix Part No.	Serial/Model No. Eff	Dscont	Name & Description	Mfr Code	Mfr Part Number
C4320	290-0255-00			CAP.,FXD,ELCTLT:20UF,50V	56289	30D206G050DC9
C4321	281-0775-00			CAP.,FXD,CER DI:0.1UF,20%,50V	72982	8005D9AABZ5U104M
C4322	281-0775-00			CAP.,FXD,CER DI:0.1UF,20%,50V	72982	8005D9AABZ5U104M
C4330[1]	281-0775-00			CAP.,FXD,CER DI:0.1UF,20%,50V	72982	8005D9AABZ5U104M
C4340	281-0775-00			CAP.,FXD,CER DI:0.1UF,20%,50V	72982	8005D9AABZ5U104M
C5030	281-0649-00			CAP.,FXD,CER DI:1000PF,+80-20%,500V	72982	2404039X5V102Z
C5032	281-0649-00			CAP.,FXD,CER DI:1000PF,+80-20%,500V	72982	2404039X5V102Z
C5034	281-0649-00			CAP.,FXD,CER DI:1000PF,+80-20%,500V	72982	2404039X5V102Z
C5038	281-0649-00			CAP.,FXD,CER DI:1000PF,+80-20%,500V	72982	2404039X5V102Z
CR1120	152-0066-00			SEMICOND DEVICE:SILICON,400V,750MA	80009	152-0066-00
CR1160	152-0141-02			SEMICOND DEVICE:SILICON,30V,150MA	07910	1N4152
CR1210[1,2]	152-0585-00			SEMICOND DEVICE:SILICON,BRIDGE,75V,75MA	80009	152-0585-00
CR1260	152-0008-00			SEMICOND DEVICE:GERMANIUM,75V,60MA	80009	152-0008-00
CR1290	152-0141-02			SEMICOND DEVICE:SILICON,30V,150MA	07910	1N4152
CR1360	152-0008-00			SEMICOND DEVICE:GERMANIUM,75V,60MA	80009	152-0008-00
CR1362	152-0141-02			SEMICOND DEVICE:SILICON,30V,150MA	07910	1N4152
CR1390	152-0141-02			SEMICOND DEVICE:SILICON,30V,150MA	07910	1N4152
CR1420	152-0141-02			SEMICOND DEVICE:SILICON,30V,150MA	07910	1N4152
CR1440	152-0008-00			SEMICOND DEVICE:GERMANIUM,75V,60MA	80009	152-0008-00
CR1460	152-0008-00			SEMICOND DEVICE:GERMANIUM,75V,60MA	80009	152-0008-00
CR1520	152-0141-02			SEMICOND DEVICE:SILICON,30V,150MA	07910	1N4152
CR1550	152-0333-00			SEMICOND DEVICE:SILICON,55V,200MA	80009	152-0333-00
CR1570	152-0141-02			SEMICOND DEVICE:SILICON,30V,150MA	07910	1N4152
CR1640	152-0141-02			SEMICOND DEVICE:SILICON,30V,150MA	07910	1N4152
CR1680	152-0141-02			SEMICOND DEVICE:SILICON,30V,150MA	07910	1N4152
CR1710	152-0066-00			SEMICOND DEVICE:SILICON,400V,750MA	80009	152-0066-00
CR1720	152-0066-00			SEMICOND DEVICE:SILICON,400V,750MA	80009	152-0066-00
CR1722	152-0066-00			SEMICOND DEVICE:SILICON,400V,750MA	80009	152-0066-00
CR1790	152-0141-02			SEMICOND DEVICE:SILICON,30V,150MA	07910	1N4152
CR2214	152-0524-00			SEMICOND DEVICE:100V,100MA	80009	152-0524-00
CR2216	152-0322-00			SEMICOND DEVICE:SILICON,15V,HOT CARRIER	28480	5082-2672
CR2218	152-0322-00			SEMICOND DEVICE:SILICON,15V,HOT CARRIER	28480	5082-2672
CR2242	152-0141-02			SEMICOND DEVICE:SILICON,30V,150MA	07910	1N4152
CR2245	152-0141-02			SEMICOND DEVICE:SILICON,30V,150MA	07910	1N4152
CR2320	152-0066-00			SEMICOND DEVICE:SILICON,400V,750MA	80009	152-0066-00
CR2335	152-0141-02			SEMICOND DEVICE:SILICON,30V,150MA	07910	1N4152
CR2420	152-0066-00			SEMICOND DEVICE:SILICON,400V,750MA	80009	152-0066-00
CR2460	152-0322-00			SEMICOND DEVICE:SILICON,15V,HOT CARRIER	28480	5082-2672
CR2462	152-0322-00			SEMICOND DEVICE:SILICON,15V,HOT CARRIER	28480	5082-2672
CR4210	152-0333-00			SEMICOND DEVICE:SILICON,55V,200MA	80009	152-0333-00
CR4330	152-0333-00			SEMICOND DEVICE:SILICON,55V,200MA	80009	152-0333-00
DS3210	150-1036-00			LAMP,LED:RED,3.0V,40MA	50522	MU5074C
DS3220	150-1036-00			LAMP,LED:RED,3.0V,40MA	50522	MU5074C
DS3224	150-1036-00			LAMP,LED:RED,3.0V,40MA	50522	MU5074C
DS3230	150-1036-00			LAMP,LED:RED,3.0V,40MA	50522	MU5074C
DS5023	150-1036-00			LAMP,LED:RED,3.0V,40MA	50522	MU5074C
DS5028	150-1036-00			LAMP,LED:RED,3.0V,40MA	50522	MU5074C
F5020	159-0148-00			FUSE,WIRE LEAD:0.062A,125V,5SEC	75915	275.062
J1770	131-1003-00			CONNECTOR BODY,:CKT CD MT,3 PRONG	80009	131-1003-00
J5001	131-0955-00			CONNECTOR,RCPT,:BNC,FEMALE,W/HARDWARE	05091	31-279
J5021	103-0194-00			ADAPTER,CONN:BNC TO SMB,W/OUT FUSE	24931	29JJ120-1

[1]Option 7
[2]Option 1

Ckt No.	Tektronix Part No.	Serial/Model No. Eff	Dscont	Name & Description	Mfr Code	Mfr Part Number
L1588	108-0240-00			COIL,RF:820UH	76493	B5147
L1590	108-0317-00			COIL,RF:15UH	32159	71501M
L1713	108-0422-00			COIL,RF:80UH	80009	108-0422-00
L2210	108-0509-00			COIL,RF:2.5UH	80009	108-0509-00
L2218	108-0509-00			COIL,RF:2.5UH	80009	108-0509-00
L2344	108-0509-00			COIL,RF:2.5UH	80009	108-0509-00
L2362	108-0736-00			COIL,RF:825NH	80009	108-0736-00
L2420	108-0509-00			COIL,RF:2.5UH	80009	108-0509-00
L2426	108-0509-00			COIL,RF:2.5UH	80009	108-0509-00
L2450	108-0509-00			COIL,RF:2.5UH	80009	108-0509-00
L2452	108-0509-00			COIL,RF:2.5UH	80009	108-0509-00
L2464	108-0455-00			COIL,RF:FIXED,40NH	80009	108-0455-00
L2466	108-0509-00			COIL,RF:2.5UH	80009	108-0509-00
Q1140	151-0301-00			TRANSISTOR:SILICON,PNP	04713	2N2907A
Q1142	151-0301-00			TRANSISTOR:SILICON,PNP	04713	2N2907A
Q1143	151-0301-00			TRANSISTOR:SILICON,PNP	04713	2N2907A
Q1150	151-0301-00			TRANSISTOR:SILICON,PNP	04713	2N2907A
Q1152	151-0188-00			TRANSISTOR:SILICON,PNP	80009	151-0188-00
Q1153	151-0301-00			TRANSISTOR:SILICON,PNP	04713	2N2907A
Q1154	151-0302-00			TRANSISTOR:SILICON,NPN	04713	2N2222A
Q1160	151-0503-00			TRANSISTOR:SCR,30V,0.8A	04713	2N5060
Q1170	151-0341-00			TRANSISTOR:SILICON,NPN	07263	S040065
Q1172	151-0341-00			TRANSISTOR:SILICON,NPN	07263	S040065
Q1180	151-0424-00			TRANSISTOR:SILICON,NPN	80009	151-0424-00
Q1182	151-0424-00			TRANSISTOR:SILICON,NPN	80009	151-0424-00
Q1240	151-0301-00			TRANSISTOR:SILICON,PNP	04713	2N2907A
Q1242	151-0301-00			TRANSISTOR:SILICON,PNP	04713	2N2907A
Q1243	151-0301-00			TRANSISTOR:SILICON,PNP	04713	2N2907A
Q1250	151-0301-00			TRANSISTOR:SILICON,PNP	04713	2N2907A
Q1290	151-0190-00			TRANSISTOR:SILICON,NPN	80009	151-0190-00
Q1350	151-0341-00			TRANSISTOR:SILICON,NPN	07263	S040065
Q1352	151-0341-00			TRANSISTOR:SILICON,NPN	07263	S040065
Q1420	151-0190-00			TRANSISTOR:SILICON,NPN	80009	151-0190-00
Q1422	151-0190-00			TRANSISTOR:SILICON,NPN	80009	151-0190-00
Q1460	151-0188-00			TRANSISTOR:SILICON,PNP	80009	151-0188-00
Q1520	151-0188-00			TRANSISTOR:SILICON,PNP	80009	151-0188-00
Q1522	151-0188-00			TRANSISTOR:SILICON,PNP	80009	151-0188-00
Q1550	151-0341-00			TRANSISTOR:SILICON,NPN	07263	S040065
Q1552	151-0188-00			TRANSISTOR:SILICON,PNP	80009	151-0188-00
Q1553	151-0188-00			TRANSISTOR:SILICON,PNP	80009	151-0188-00
Q1620	151-0463-00			TRANSISTOR:SILICON,PNP	03508	D41E7
Q1623	151-0302-00			TRANSISTOR:SILICON,NPN	04713	2N2222A
Q1624	151-0302-00			TRANSISTOR:SILICON,NPN	04713	2N2222A
Q1630	151-0341-00			TRANSISTOR:SILICON,NPN	07263	S040065
Q1632	151-0341-00			TRANSISTOR:SILICON,NPN	07263	S040065
Q1640	151-0342-00			TRANSISTOR:SILICON,PNP	80009	151-0342-00
Q1642	151-0188-00			TRANSISTOR:SILICON,PNP	80009	151-0188-00
Q1643	151-0188-00			TRANSISTOR:SILICON,PNP	80009	151-0188-00
Q1660	151-0188-00			TRANSISTOR:SILICON,PNP	80009	151-0188-00
Q1730	151-0301-00			TRANSISTOR:SILICON,PNP	04713	2N2907A
Q1732	151-0504-00			TRANSISTOR:SILICON,N-CHAN,UNIJUNCTION	04713	2N4851
Q1733	151-0302-00			TRANSISTOR:SILICON,NPN	04713	2N2222A
Q1790	151-1103-00			TRANSISTOR:SILICON,FE,N-CHANNEL	18324	SD210

Ckt No.	Tektronix Part No.	Serial/Model No. Eff	Dscont	Name & Description	Mfr Code	Mfr Part Number
Q1792	151-0190-00			TRANSISTOR:SILICON,NPN	80009	151-0190-00
Q2125	151-0188-00			TRANSISTOR:SILICON,PNP	80009	151-0188-00
Q2135	151-0188-00			TRANSISTOR:SILICON,PNP	80009	151-0188-00
Q2145	151-0188-00			TRANSISTOR:SILICON,PNP	80009	151-0188-00
Q2155	151-0188-00			TRANSISTOR:SILICON,PNP	80009	151-0188-00
Q2226	151-0636-00			TRANSISTOR:SILICON,NPN	80009	151-0636-00
Q2236	151-0636-00			TRANSISTOR:SILICON,NPN	80009	151-0636-00
Q2246	151-0636-00			TRANSISTOR:SILICON,NPN	80009	151-0636-00
Q2256	151-0636-00			TRANSISTOR:SILICON,NPN	80009	151-0636-00
Q2436	151-0190-00			TRANSISTOR:SILICON,NPN	80009	151-0190-00
Q4110	151-0190-00			TRANSISTOR:SILICON,NPN	80009	151-0190-00
Q4120	151-0188-00			TRANSISTOR:SILICON,PNP	80009	151-0188-00
Q4240	151-0301-00			TRANSISTOR:SILICON,PNP	04713	2N2907A
Q4242	151-0301-00			TRANSISTOR:SILICON,PNP	04713	2N2907A
Q4310	151-0188-00			TRANSISTOR:SILICON,PNP	80009	151-0188-00
Q4312	151-0190-00			TRANSISTOR:SILICON,NPN	80009	151-0190-00
R1120	308-0240-00			RES.,FXD,WW:2 OHM,5%,3W	91637	RS2B-D2R000J
R1122	315-0750-00			RES.,FXD,CMPSN:75 OHM,5%,0.25W	01121	CB7505
R1123	315-0750-00			RES.,FXD,CMPSN:75 OHM,5%,0.25W	01121	CB7505
R1124	315-0750-00			RES.,FXD,CMPSN:75 OHM,5%,0.25W	01121	CB7505
R1125	315-0750-00			RES.,FXD,CMPSN:75 OHM,5%,0.25W	01121	CB7505
R1126	315-0750-00			RES.,FXD,CMPSN:75 OHM,5%,0.25W	01121	CB7505
R1128	315-0750-00			RES.,FXD,CMPSN:75 OHM,5%,0.25W	01121	CB7505
R1129	315-0750-00			RES.,FXD,CMPSN:75 OHM,5%,0.25W	01121	CB7505
R1131	315-0102-00			RES.,FXD,CMPSN:1K OHM,5%,0.25W	01121	CB1025
R1132	315-0102-00			RES.,FXD,CMPSN:1K OHM,5%,0.25W	01121	CB1025
R1140	315-0102-00			RES.,FXD,CMPSN:1K OHM,5%,0.25W	01121	CB1025
R1142	315-0102-00			RES.,FXD,CMPSN:1K OHM,5%,0.25W	01121	CB1025
R1143	315-0151-00			RES.,FXD,CMPSN:150 OHM,5%,0.25W	01121	CB1515
R1150	315-0361-00			RES.,FXD,CMPSN:360 OHM,5%,0.25W	01121	CB3615
R1160	315-0103-00			RES.,FXD,CMPSN:10K OHM,5%,0.25W	01121	CB1035
R1162	315-0202-00			RES.,FXD,CMPSN:2K OHM,5%,0.25W	01121	CB2025
R1163	315-0102-00			RES.,FXD,CMPSN:1K OHM,5%,0.25W	01121	CB1025
R1164	315-0512-00			RES.,FXD,CMPSN:5.1K OHM,5%,0.25W	01121	CB5125
R1166	315-0202-00			RES.,FXD,CMPSN:2K OHM,5%,0.25W	01121	CB2025
R1170	315-0123-00			RES.,FXD,CMPSN:12K OHM,5%,0.25W	01121	CB1235
R1172	315-0102-00			RES.,FXD,CMPSN:1K OHM,5%,0.25W	01121	CB1025
R1173	315-0512-00			RES.,FXD,CMPSN:5.1K OHM,5%,0.25W	01121	CB5125
R1174	315-0301-00			RES.,FXD,CMPSN:300 OHM,5%,0.25W	01121	CB3015
R1182	315-0102-00			RES.,FXD,CMPSN:1K OHM,5%,0.25W	01121	CB1025
R1183	315-0512-00			RES.,FXD,CMPSN:5.1K OHM,5%,0.25W	01121	CB5125
R1190	315-0512-00			RES.,FXD,CMPSN:5.1K OHM,5%,0.25W	01121	CB5125
R1224	301-0271-00			RES.,FXD,CMPSN:270 OHM,5%,0.50W	01121	EB2715
R1230	315-0103-00			RES.,FXD,CMPSN:10K OHM,5%,0.25W	01121	CB1035
R1232	315-0102-00			RES.,FXD,CMPSN:1K OHM,5%,0.25W	01121	CB1025
R1234	315-0102-00			RES.,FXD,CMPSN:1K OHM,5%,0.25W	01121	CB1025
R1240	315-0102-00			RES.,FXD,CMPSN:1K OHM,5%,0.25W	01121	CB1025
R1241	315-0272-00			RES.,FXD,CMPSN:2.7K OHM,5%,0.25W	01121	CB2725
R1242	315-0102-00			RES.,FXD,CMPSN:1K OHM,5%,0.25W	01121	CB1025
R1243	315-0272-00			RES.,FXD,CMPSN:2.7K OHM,5%,0.25W	01121	CB2725
R1244	315-0102-00			RES.,FXD,CMPSN:1K OHM,5%,0.25W	01121	CB1025
R1245	315-0102-00			RES.,FXD,CMPSN:1K OHM,5%,0.25W	01121	CB1025

Ckt No.	Tektronix Part No.	Serial/Model No. Eff	Dscont	Name & Description	Mfr Code	Mfr Part Number
R1246	315-0272-00			RES.,FXD,CMPSN:2.7K OHM,5%,0.25W	01121	CB2725
R1247	315-0272-00			RES.,FXD,CMPSN:2.7K OHM,5%,0.25W	01121	CB2725
R1248	315-0272-00			RES.,FXD,CMPSN:2.7K OHM,5%,0.25W	01121	CB2725
R1249	315-0102-00			RES.,FXD,CMPSN:1K OHM,5%,0.25W	01121	CB1025
R1250	315-0102-00			RES.,FXD,CMPSN:1K OHM,5%,0.25W	01121	CB1025
R1251	315-0102-00			RES.,FXD,CMPSN:1K OHM,5%,0.25W	01121	CB1025
R1252	315-0272-00			RES.,FXD,CMPSN:2.7K OHM,5%,0.25W	01121	CB2725
R1253	315-0272-00			RES.,FXD,CMPSN:2.7K OHM,5%,0.25W	01121	CB2725
R1254	315-0272-00			RES.,FXD,CMPSN:2.7K OHM,5%,0.25W	01121	CB2725
R1256	315-0512-00			RES.,FXD,CMPSN:5.1K OHM,5%,0.25W	01121	CB5125
R1257	315-0272-00			RES.,FXD,CMPSN:2.7K OHM,5%,0.25W	01121	CB2725
R1258	315-0102-00			RES.,FXD,CMPSN:1K OHM,5%,0.25W	01121	CB1025
R1290	315-0102-00			RES.,FXD,CMPSN:1K OHM,5%,0.25W	01121	CB1025
R1312	315-0201-00			RES.,FXD,CMPSN:200 OHM,5%,0.25W	01121	CB2015
R1350	315-0102-00			RES.,FXD,CMPSN:1K OHM,5%,0.25W	01121	CB1025
R1352	315-0512-00			RES.,FXD,CMPSN:5.1K OHM,5%,0.25W	01121	CB5125
R1353	315-0333-00			RES.,FXD,CMPSN:33K OHM,5%,0.25W	01121	CB3335
R1358	315-0333-00			RES.,FXD,CMPSN:33K OHM,5%,0.25W	01121	CB3335
R1370	315-0301-00			RES.,FXD,CMPSN:300 OHM,5%,0.25W	01121	CB3015
R1385	307-0445-00			RES,NTWK,FXD,FI:4.7K OHM,20%,C9) RES	03888	A3HT07
R1390	315-0271-00			RES.,FXD,CMPSN:270 OHM,5%,0.25W	01121	CB2715
R1392	315-0102-00			RES.,FXD,CMPSN:1K OHM,5%,0.25W	01121	CB1025
R1393	315-0202-00			RES.,FXD,CMPSN:2K OHM,5%,0.25W	01121	CB2025
R1410	301-0560-00			RES.,FXD,CMPSN:56 OHM,5%,0.50W	01121	EB5605
R1412	315-0471-00			RES.,FXD,CMPSN:470 OHM,5%,0.25W	01121	CB4715
R1413	315-0183-00			RES.,FXD,CMPSN:18K OHM,5%,0.25W	01121	CB1835
R1420	315-0103-00			RES.,FXD,CMPSN:10K OHM,5%,0.25W	01121	CB1035
R1421	315-0102-00			RES.,FXD,CMPSN:1K OHM,5%,0.25W	01121	CB1025
R1424	315-0152-00			RES.,FXD,CMPSN:1.5K OHM,5%,0.25W	01121	CB1525
R1428	315-0562-00			RES.,FXD,CMPSN:5.6K OHM,5%,0.25W	01121	CB5625
R1429	315-0102-00			RES.,FXD,CMPSN:1K OHM,5%,0.25W	01121	CB1025
R1432	315-0393-00			RES.,FXD,CMPSN:39K OHM,5%,0.25W	01121	CB3935
R1435	307-0445-00			RES,NTWK,FXD,FI:4.7K OHM,20%,C9) RES	03888	A3HT07
R1442	315-0470-00			RES.,FXD,CMPSN:47 OHM,5%,0.25W	01121	CB4705
R1445	307-0445-00			RES,NTWK,FXD,FI:4.7K OHM,20%,C9) RES	03888	A3HT07
R1450	315-0332-00			RES.,FXD,CMPSN:3.3K OHM,5%,0.25W	01121	CB3325
R1452	315-0152-00			RES.,FXD,CMPSN:1.5K OHM,5%,0.25W	01121	CB1525
R1455	315-0222-00			RES.,FXD,CMPSN:2.2K OHM,5%,0.25W	01121	CB2225
R1457	315-0512-00			RES.,FXD,CMPSN:5.1K OHM,5%,0.25W	01121	CB5125
R1458	315-0512-00			RES.,FXD,CMPSN:5.1K OHM,5%,0.25W	01121	CB5125
R1460	311-1342-00			RES.,VAR,NON WW:PNL,500K OHM,0.5W,W/SW	12697	CM39425NP
R1462	315-0222-00			RES.,FXD,CMPSN:2.2K OHM,5%,0.25W	01121	CB2225
R1464	315-0301-00			RES.,FXD,CMPSN:300 OHM,5%,0.25W	01121	CB3015
R1470	315-0301-00			RES.,FXD,CMPSN:300 OHM,5%,0.25W	01121	CB3015
R1472	315-0301-00			RES.,FXD,CMPSN:300 OHM,5%,0.25W	01121	CB3015
R1523	315-0472-00			RES.,FXD,CMPSN:4.7K OHM,5%,0.25W	01121	CB4725
R1524	315-0362-00			RES.,FXD,CMPSN:3.6K OHM,5%,0.25W	01121	CB3625
R1543	315-0512-00			RES.,FXD,CMPSN:5.1K OHM,5%,0.25W	01121	CB5125
R1544	315-0512-00			RES.,FXD,CMPSN:5.1K OHM,5%,0.25W	01121	CB5125
R1548	315-0561-00			RES.,FXD,CMPSN:560 OHM,5%,0.25W	01121	CB5615
R1549	315-0221-00			RES.,FXD,CMPSN:220 OHM,5%,0.25W	01121	CB2215
R1550	315-0561-00			RES.,FXD,CMPSN:560 OHM,5%,0.25W	01121	CB5615
R1552	315-0300-00			RES.,FXD,CMPSN:30 OHM,5%,0.25W	01121	CB3005

Ckt No.	Tektronix Part No.	Serial/Model No. Eff	Dscont	Name & Description	Mfr Code	Mfr Part Number
R1553	315-0300-00			RES.,FXD,CMPSN:30 OHM,5%,0.25W	01121	CB3005
R1554	315-0561-00			RES.,FXD,CMPSN:560 OHM,5%,0.25W	01121	CB5615
R1560	315-0561-00			RES.,FXD,CMPSN:560 OHM,5%,0.25W	01121	CB5615
R1562	315-0511-00			RES.,FXD,CMPSN:510 OHM,5%,0.25W	01121	CB5115
R1563	315-0561-00			RES.,FXD,CMPSN:560 OHM,5%,0.25W	01121	CB5615
R1564	315-0561-00			RES.,FXD,CMPSN:560 OHM,5%,0.25W	01121	CB5615
R1565	315-0302-00			RES.,FXD,CMPSN:3K OHM,5%,0.25W	01121	CB3025
R1566	315-0561-00			RES.,FXD,CMPSN:560 OHM,5%,0.25W	01121	CB5615
R1568	315-0561-00			RES.,FXD,CMPSN:560 OHM,5%,0.25W	01121	CB5615
R1572	315-0681-00			RES.,FXD,CMPSN:680 OHM,5%,0.25W	01121	CB6815
R1573	315-0102-00			RES.,FXD,CMPSN:1K OHM,5%,0.25W	01121	CB1025
R1576	315-0271-00			RES.,FXD,CMPSN:270 OHM,5%,0.25W	01121	CB2715
R1578	315-0271-00			RES.,FXD,CMPSN:270 OHM,5%,0.25W	01121	CB2715
R1583	315-0271-00			RES.,FXD,CMPSN:270 OHM,5%,0.25W	01121	CB2715
R1584	315-0181-00			RES.,FXD,CMPSN:180 OHM,5%,0.25W	01121	CB1815
R1587	315-0121-00			RES.,FXD,CMPSN:120 OHM,5%,0.25W	01121	CB1215
R1592	315-0104-00			RES.,FXD,CMPSN:100K OHM,5%,0.25W	01121	CB1045
R1593	321-0807-00			RES.,FXD,FILM:900K OHM,1%,0.125W	91637	HFF1104F90002F
R1594	321-0617-00			RES.,FXD,FILM:111K OHM,1%,0.125W	91637	MFF1816G11102F
R1596	321-0481-00			RES.,FXD,FILM:1M OHM,1%,0.125W	91637	MFF1816G10003F
R1610	315-0162-00			RES.,FXD,CMPSN:1.6K OHM,5%,0.25W	01121	CB1625
R1612	321-0225-00			RES.,FXD,FILM:2.15K OHM,1%,0.125W	91637	MFF1816G21500F
R1620	321-0260-00			RES.,FXD,FILM:4.99K OHM,1%,0.125W	91637	MFF1816G49900F
R1622	321-0291-00			RES.,FXD,FILM:10.5K OHM,1%,0.125W	91637	MFF1816G10501F
R1623	315-0102-00			RES.,FXD,CMPSN:1K OHM,5%,0.25W	01121	CB1025
R1624	321-0300-00			RES.,FXD,FILM:13K OHM,1%,0.125W	91637	MFF1816G13001F
R1626	321-0222-00			RES.,FXD,FILM:2K OHM,1%,0.125W	91637	MFF1816G20000F
R1630	315-0202-00			RES.,FXD,CMPSN:2K OHM,5%,0.25W	01121	CB2025
R1632	315-0123-00			RES.,FXD,CMPSN:12K OHM,5%,0.25W	01121	CB1235
R1633	315-0102-00			RES.,FXD,CMPSN:1K OHM,5%,0.25W	01121	CB1025
R1642	315-0474-00			RES.,FXD,CMPSN:470K OHM,5%,0.25W	01121	CB4745
R1643	315-0103-00			RES.,FXD,CMPSN:10K OHM,5%,0.25W	01121	CB1035
R1644	315-0512-00			RES.,FXD,CMPSN:5.1K OHM,5%,0.25W	01121	CB5125
R1650	315-0511-00			RES.,FXD,CMPSN:510 OHM,5%,0.25W	01121	CB5115
R1652	315-0240-00			RES.,FXD,CMPSN:24 OHM,5%,0.25W	01121	CB2405
R1653	315-0300-00			RES.,FXD,CMPSN:30 OHM,5%,0.25W	01121	CB3005
R1654	315-0561-00			RES.,FXD,CMPSN:560 OHM,5%,0.25W	01121	CB5615
R1655	315-0391-00			RES.,FXD,CMPSN:390 OHM,5%,0.25W	01121	CB3915
R1656	315-0561-00			RES.,FXD,CMPSN:560 OHM,5%,0.25W	01121	CB5615
R1658	315-0561-00			RES.,FXD,CMPSN:560 OHM,5%,0.25W	01121	CB5615
R1660	315-0151-00			RES.,FXD,CMPSN:150 OHM,5%,0.25W	01121	CB1515
R1670	315-0561-00			RES.,FXD,CMPSN:560 OHM,5%,0.25W	01121	CB5615
R1672	315-0561-00			RES.,FXD,CMPSN:560 OHM,5%,0.25W	01121	CB5615
R1674	315-0390-00			RES.,FXD,CMPSN:39 OHM,5%,0.25W	01121	CB3905
R1676	315-0101-00			RES.,FXD,CMPSN:100 OHM,5%,0.25W	01121	CB1015
R1680	315-0561-00			RES.,FXD,CMPSN:560 OHM,5%,0.25W	01121	CB5615
R1682	315-0162-00			RES.,FXD,CMPSN:1.6K OHM,5%,0.25W	01121	CB1625
R1683	315-0162-00			RES.,FXD,CMPSN:1.6K OHM,5%,0.25W	01121	CB1625
R1684	315-0221-00			RES.,FXD,CMPSN:220 OHM,5%,0.25W	01121	CB2215
R1690	315-0101-00			RES.,FXD,CMPSN:100 OHM,5%,0.25W	01121	CB1015
R1692	315-0221-00			RES.,FXD,CMPSN:220 OHM,5%,0.25W	01121	CB2215
R1710	308-0244-00			RES.,FXD,WW:0.3 OHM,10%,2W	91637	RS2B162ER3000K
R1714	321-0260-00			RES.,FXD,FILM:4.99K OHM,1%,0.125W	91637	MFF1816G49900F

Ckt No.	Tektronix Part No.	Serial/Model No. Eff	Dscont	Name & Description	Mfr Code	Mfr Part Number
R1720	315-0152-00			RES.,FXD,CMPSN:1.5K OHM,5%,0.25W	01121	CB1525
R1722	315-0132-00			RES.,FXD,CMPSN:1.3K OHM,5%,0.25W	01121	CB1325
R1723	315-0102-00			RES.,FXD,CMPSN:1K OHM,5%,0.25W	01121	CB1025
R1724	315-0101-00			RES.,FXD,CMPSN:100 OHM,5%,0.25W	01121	CB1015
R1726	308-0441-00			RES.,FXD,WW:3 OHM,5%,3W	91637	RS2B-D3R000J
R1729	307-0023-00			RES.,FXD,CMPSN:4.7 OHM,10%,0.50W	01121	EB47G1
R1730	315-0102-00			RES.,FXD,CMPSN:1K OHM,5%,0.25W	01121	CB1025
R1732	315-0102-00			RES.,FXD,CMPSN:1K OHM,5%,0.25W	01121	CB1025
R1734	315-0102-00			RES.,FXD,CMPSN:1K OHM,5%,0.25W	01121	CB1025
R1736	315-0102-00			RES.,FXD,CMPSN:1K OHM,5%,0.25W	01121	CB1025
R1738	315-0512-00			RES.,FXD,CMPSN:5.1K OHM,5%,0.25W	01121	CB5125
R1739	315-0200-00			RES.,FXD,CMPSN:20 OHM,5%,0.25W	01121	CB2005
R1740	315-0153-00			RES.,FXD,CMPSN:15K OHM,5%,0.25W	01121	CB1535
R1742	315-0300-00			RES.,FXD,CMPSN:30 OHM,5%,0.25W	01121	CB3005
R1750	315-0561-00			RES.,FXD,CMPSN:560 OHM,5%,0.25W	01121	CB5615
R1752	315-0561-00			RES.,FXD,CMPSN:560 OHM,5%,0.25W	01121	CB5615
R1753	315-0302-00			RES.,FXD,CMPSN:3K OHM,5%,0.25W	01121	CB3025
R1754	315-0681-00			RES.,FXD,CMPSN:680 OHM,5%,0.25W	01121	CB6815
R1755	315-0391-00			RES.,FXD,CMPSN:390 OHM,5%,0.25W	01121	CB3915
R1758	315-0391-00			RES.,FXD,CMPSN:390 OHM,5%,0.25W	01121	CB3915
R1759	315-0681-00			RES.,FXD,CMPSN:680 OHM,5%,0.25W	01121	CB6815
R1760	315-0561-00			RES.,FXD,CMPSN:560 OHM,5%,0.25W	01121	CB5615
R1762	315-0561-00			RES.,FXD,CMPSN:560 OHM,5%,0.25W	01121	CB5615
R1763	315-0561-00			RES.,FXD,CMPSN:560 OHM,5%,0.25W	01121	CB5615
R1770	315-0561-00			RES.,FXD,CMPSN:560 OHM,5%,0.25W	01121	CB5615
R1772	315-0302-00			RES.,FXD,CMPSN:3K OHM,5%,0.25W	01121	CB3025
R1773	315-0561-00			RES.,FXD,CMPSN:560 OHM,5%,0.25W	01121	CB5615
R1775	315-0271-00			RES.,FXD,CMPSN:270 OHM,5%,0.25W	01121	CB2715
R1776	315-0162-00			RES.,FXD,CMPSN:1.6K OHM,5%,0.25W	01121	CB1625
R1778	315-0162-00			RES.,FXD,CMPSN:1.6K OHM,5%,0.25W	01121	CB1625
R1780	315-0221-00			RES.,FXD,CMPSN:220 OHM,5%,0.25W	01121	CB2215
R1782	315-0221-00			RES.,FXD,CMPSN:220 OHM,5%,0.25W	01121	CB2215
R1783	315-0561-00			RES.,FXD,CMPSN:560 OHM,5%,0.25W	01121	CB5615
R1784	315-0391-00			RES.,FXD,CMPSN:390 OHM,5%,0.25W	01121	CB3915
R1790	315-0510-00			RES.,FXD,CMPSN:51 OHM,5%,0.25W	01121	CB5105
R1792	315-0182-00			RES.,FXD,CMPSN:1.8K OHM,5%,0.25W	01121	CB1825
R1793	315-0681-00			RES.,FXD,CMPSN:680 OHM,5%,0.25W	01121	CB6815
R1794	315-0272-00			RES.,FXD,CMPSN:2.7K OHM,5%,0.25W	01121	CB2725
R1796	305-0470-00			RES.,FXD,CMPSN:47 OHM,5%,2W	01121	HB4705
R2115	315-0103-00			RES.,FXD,CMPSN:10K OHM,5%,0.25W	01121	CB1035
R2120	315-0103-00			RES.,FXD,CMPSN:10K OHM,5%,0.25W	01121	CB1035
R2124	315-0331-00			RES.,FXD,CMPSN:330 OHM,5%,0.25W	01121	CB3315
R2126	315-0102-00			RES.,FXD,CMPSN:1K OHM,5%,0.25W	01121	CB1025
R2130	315-0103-00			RES.,FXD,CMPSN:10K OHM,5%,0.25W	01121	CB1035
R2132	315-0103-00			RES.,FXD,CMPSN:10K OHM,5%,0.25W	01121	CB1035
R2134	315-0102-00			RES.,FXD,CMPSN:1K OHM,5%,0.25W	01121	CB1025
R2136	315-0331-00			RES.,FXD,CMPSN:330 OHM,5%,0.25W	01121	CB3315
R2140	315-0103-00			RES.,FXD,CMPSN:10K OHM,5%,0.25W	01121	CB1035
R2142	315-0103-00			RES.,FXD,CMPSN:10K OHM,5%,0.25W	01121	CB1035
R2144	315-0102-00			RES.,FXD,CMPSN:1K OHM,5%,0.25W	01121	CB1025
R2146	315-0331-00			RES.,FXD,CMPSN:330 OHM,5%,0.25W	01121	CB3315
R2150	315-0103-00			RES.,FXD,CMPSN:10K OHM,5%,0.25W	01121	CB1035
R2152	315-0103-00			RES.,FXD,CMPSN:10K OHM,5%,0.25W	01121	CB1035

Ckt No.	Tektronix Part No.	Serial/Model No. Eff	Dscont	Name & Description	Mfr Code	Mfr Part Number
R2154	315-0102-00			RES.,FXD,CMPSN:1K OHM,5%,0.25W	01121	CB1025
R2156	315-0331-00			RES.,FXD,CMPSN:330 OHM,5%,0.25W	01121	CB3315
R2210	301-0181-00			RES.,FXD,CMPSN:180 OHM,5%,0.50W	01121	EB1815
R2212	301-0200-00			RES.,FXD,CMPSN:20 OHM,5%,0.50W	01121	EB2005
R2214	301-0131-00			RES.,FXD,CMPSN:130 OHM,5%,0.50W	01121	EB1315
R2220	317-0470-00			RES.,FXD,CMPSN:47 OHM,5%,0.125W	01121	BB4705
R2224	317-0510-00			RES.,FXD,CMPSN:51 OHM,5%,0.125W	01121	BB5105
R2227	307-0552-00			RES.,FXD,FILM:5 OHM,5%,0.075 W	52262	MCRA5R0JZ
R2230	317-0470-00			RES.,FXD,CMPSN:47 OHM,5%,0.125W	01121	BB4705
R2234	317-0510-00			RES.,FXD,CMPSN:51 OHM,5%,0.125W	01121	BB5105
R2237	307-0552-00			RES.,FXD,FILM:5 OHM,5%,0.075 W	52262	MCRA5R0JZ
R2240	317-0470-00			RES.,FXD,CMPSN:47 OHM,5%,0.125W	01121	BB4705
R2244	317-0510-00			RES.,FXD,CMPSN:51 OHM,5%,0.125W	01121	BB5105
R2247	307-0552-00			RES.,FXD,FILM:5 OHM,5%,0.075 W	52262	MCRA5R0JZ
R2250	317-0470-00			RES.,FXD,CMPSN:47 OHM,5%,0.125W	01121	BB4705
R2256	317-0510-00			RES.,FXD,CMPSN:51 OHM,5%,0.125W	01121	BB5105
R2257	307-0552-00			RES.,FXD,FILM:5 OHM,5%,0.075 W	52262	MCRA5R0JZ
R2320	315-0131-00			RES.,FXD,CMPSN:130 OHM,5%,0.25W	01121	CB1315
R2330	315-0102-00			RES.,FXD,CMPSN:1K OHM,5%,0.25W	01121	CB1025
R2335	315-0102-00			RES.,FXD,CMPSN:1K OHM,5%,0.25W	01121	CB1025
R2337	315-0226-00			RES.,FXD,CMPSN:22M OHM,5%,0.25W	01121	CB2265
R2338	315-0273-00			RES.,FXD,CMPSN:27K OHM,5%,0.25W	01121	CB2735
R2360	317-0620-00			RES.,FXD,CMPSN:62 OHM,5%,0.125W	01121	BB6205
R2368	317-0151-00			RES.,FXD,CMPSN:150 OHM,5%,0.125W	01121	BB1515
R2422	311-1227-00			RES.,VAR,NONWIR:5K OHM,20%,0.50W	32997	3386F-T04-502
R2423	315-0513-00			RES.,FXD,CMPSN:51K OHM,5%,0.25W	01121	CB5135
R2424	315-0392-00			RES.,FXD,CMPSN:3.9K OHM,5%,0.25W	01121	CB3925
R2425	315-0393-00			RES.,FXD,CMPSN:39K OHM,5%,0.25W	01121	CB3935
R2430	315-0361-00			RES.,FXD,CMPSN:360 OHM,5%,0.25W	01121	CB3615
R2432	315-0102-00			RES.,FXD,CMPSN:1K OHM,5%,0.25W	01121	CB1025
R2434	315-0512-00			RES.,FXD,CMPSN:5.1K OHM,5%,0.25W	01121	CB5125
R2436	315-0512-00			RES.,FXD,CMPSN:5.1K OHM,5%,0.25W	01121	CB5125
R2438	315-0101-00			RES.,FXD,CMPSN:100 OHM,5%,0.25W	01121	CB1015
R2439	315-0102-00			RES.,FXD,CMPSN:1K OHM,5%,0.25W	01121	CB1025
R2440	315-0390-00			RES.,FXD,CMPSN:39 OHM,5%,0.25W	01121	CB3905
R2442	315-0271-00			RES.,FXD,CMPSN:270 OHM,5%,0.25W	01121	CB2715
R2444	315-0271-00			RES.,FXD,CMPSN:270 OHM,5%,0.25W	01121	CB2715
R2446	315-0102-00			RES.,FXD,CMPSN:1K OHM,5%,0.25W	01121	CB1025
R2448	315-0102-00			RES.,FXD,CMPSN:1K OHM,5%,0.25W	01121	CB1025
R2454	315-0271-00			RES.,FXD,CMPSN:270 OHM,5%,0.25W	01121	CB2715
R2456	315-0271-00			RES.,FXD,CMPSN:270 OHM,5%,0.25W	01121	CB2715
R2458	315-0393-00			RES.,FXD,CMPSN:39K OHM,5%,0.25W	01121	CB3935
R2464	315-0164-00			RES.,FXD,CMPSN:160K OHM,5%,0.25W	01121	CB1645
R2466	317-0201-00			RES.,FXD,CMPSN:200 OHM,5%,0.125W	01121	BB2015
R4110	315-0512-00			RES.,FXD,CMPSN:5.1K OHM,5%,0.25W	01121	CB5125
R4112	315-0471-00			RES.,FXD,CMPSN:470 OHM,5%,0.25W	01121	CB4715
R4114	315-0393-00			RES.,FXD,CMPSN:39K OHM,5%,0.25W	01121	CB3935
R4120	315-0103-00			RES.,FXD,CMPSN:10K OHM,5%,0.25W	01121	CB1035
R4122	315-0682-00			RES.,FXD,CMPSN:6.8K OHM,5%,0.25W	01121	CB6825
R4124	315-0154-00			RES.,FXD,CMPSN:150K OHM,5%,0.25W	01121	CB1545
R4134	315-0162-00			RES.,FXD,CMPSN:1.6K OHM,5%,0.25W	01121	CB1625
R4140	315-0107-00			RES.,FXD,CMPSN:100M OHM,5%,0.25W	01121	CB1075
R4142[1]	315-0102-00			RES.,FXD,CMPSN:1K OHM,5%,0.25W	01121	CB1025

[1]Option 7

Ckt No.	Tektronix Part No.	Serial/Model No. Eff	Dscont	Name & Description	Mfr Code	Mfr Part Number
R4150[1]	315-0512-00			RES.,FXD,CMPSN:5.1K OHM,5%,0.25W	01121	CB5125
R4210	315-0271-00			RES.,FXD,CMPSN:270 OHM,5%,0.25W	01121	CB2715
R4212	315-0821-00			RES.,FXD,CMPSN:820 OHM,5%,0.25W	01121	CB8215
R4214	315-0181-00			RES.,FXD,CMPSN:180 OHM,5%,0.25W	01121	CB1815
R4216	315-0102-00			RES.,FXD,CMPSN:1K OHM,5%,0.25W	01121	CB1025
R4218	315-0201-00			RES.,FXD,CMPSN:200 OHM,5%,0.25W	01121	CB2015
R4220	315-0103-00			RES.,FXD,CMPSN:10K OHM,5%,0.25W	01121	CB1035
R4222	315-0103-00			RES.,FXD,CMPSN:10K OHM,5%,0.25W	01121	CB1035
R4224	315-0224-00			RES.,FXD,CMPSN:220K OHM,5%,0.25W	01121	CB2245
R4230	315-0561-00			RES.,FXD,CMPSN:560 OHM,5%,0.25W	01121	CB5615
R4240	315-0270-00			RES.,FXD,CMPSN:27 OHM,5%,0.25W	01121	CB2705
R4250[1]	315-0512-00			RES.,FXD,CMPSN:5.1K OHM,5%,0.25W	01121	CB5125
R4310	315-0361-00			RES.,FXD,CMPSN:360 OHM,5%,0.25W	01121	CB3615
R4332	315-0201-00			RES.,FXD,CMPSN:200 OHM,5%,0.25W	01121	CB2015
R4334	315-0101-00			RES.,FXD,CMPSN:100 OHM,5%,0.25W	01121	CB1015
R4342[1]	315-0102-00			RES.,FXD,CMPSN:1K OHM,5%,0.25W	01121	CB1025
R4344[1]	315-0102-00			RES.,FXD,CMPSN:1K OHM,5%,0.25W	01121	CB1025
R5002	317-0027-00			RES.,FXD,CMPSN:	01121	BB2R705
S1320	260-1849-01			SWITCH,PUSH:DPDT,4A,250VAC	000BG	OBD
S1380	263-1168-00			SW CAM ACTR AS:DISPLAY	80009	263-1168-00
S1460	311-1342-00			RES.,VAR,NON WW:PNL,500K OHM,0.5W,W/SW	12697	CM39425NP
S1550	260-1421-00			SWITCH,PUSH:1 STA,MOMENTARY,NON-SHORT	80009	260-1421-00
S1570	260-1208-00			SWITCH,PUSH:DPDT	80009	260-1208-00
S1590	260-1448-00			SWITCH,PUSH:3 STA,NON-SHORT	80009	260-1448-00
S1690	260-1448-00			SWITCH,PUSH:3 STA,NON-SHORT	80009	260-1448-00
S1790	260-1448-00			SWITCH,PUSH:3 STA,NON-SHORT	80009	260-1448-00
U1110[2]	156-0926-00			MICROCIRCUIT,LI:VOLTAGE REGULATOR	80009	156-0926-00
U1112	156-0988-00			MICROCIRCUIT,DI:REGULATOR	80009	156-0988-00
U1130	156-0128-00			MICROCIRCUIT,DI:SGL BCD TO 7-SEG DCDR/DRVR	01295	SN7447AN
U1170	156-0032-00			MICROCIRCUIT,DI:4-BIT BINARY COUNTER	01295	SN7493AN
U1190	156-0079-00			MICROCIRCUIT,DI:DECADE COUNTER,TTL	07263	9390PC
U1230A-D	156-0140-00			MICROCIRCUIT,DI:HEX BFR,15V,TTL	01295	SN7417N
U1260A-C	156-0178-00			MICROCIRCUIT,DI:TRIPLE 3-INPUT NOR GATE	01295	SN7427N
U1270A,B	156-0041-00			MICROCIRCUIT,DI:DUAL D-TYPE FLIP-FLOP	27014	DM7474N
U1280	156-0410-00			MICROCIRCUIT,DI:COUNTER TIME BASE	50088	MK5009P
U1330	155-0119-00			MICROCIRCUIT,DI:BCD COUNTER	80009	155-0119-00
U1360A,B	156-0041-00			MICROCIRCUIT,DI:DUAL D-TYPE FLIP-FLOP	27014	DM7474N
U1430	156-0079-00			MICROCIRCUIT,DI:DECADE COUNTER,TTL	07263	9390PC
U1440A,B	156-0910-00			MICROCIRCUIT,DI:DUAL DECADE COUNTER	80009	156-0910-00
U1510	156-0071-00			MICROCIRCUIT,LI:VOLTAGE REGULATOR	80009	156-0071-00
U1520	156-0067-00			MICROCIRCUIT,LI:OPERATIONAL AMPLIFIER	80009	156-0067-00
U1530A,B	156-0405-00			MICROCIRCUIT,DI:DUAL RETRIG MONOSTABLE MV	07263	9602PC
U1532A-C	156-0043-00			MICROCIRCUIT,DI:QUAD 2-INPUT POS NOR GATE	80009	156-0043-00
U1533A-D	156-0150-00			MICROCIRCUIT,DI:QUAD 2-INPUT POS NAND BFR	01295	SN7437N
U1550	156-0642-00			MICROCIRCUIT,DI:BI-QUINARY CNTR	04713	MC10138L
U1570A-D	156-0205-00			MICROCIRCUIT,DI:QUAD 2-INPUT NOR GATE	80009	156-0205-00
U1660A,B	156-0880-00			MICROCIRCUIT,DI:DUAL D MASTER SLAVE FF	80009	156-0880-00
U1670A-C	156-0369-00			MICROCIRCUIT,LI:TRIPLE LINE RE	80009	156-0369-00
U1740A,B	156-0230-00			MICROCIRCUIT,DI:DUAL D MA-SLAVE FLIP-FLOP	80009	156-0230-00
U1760A-D	156-0205-00			MICROCIRCUIT,DI:QUAD 2-INPUT NOR GATE	80009	156-0205-00
U2330	156-0853-00			MICROCIRCUIT,LI:OPERATIONAL AMPLIFIER,DUAL	27014	LM358N
U2345	156-0228-00			MICROCIRCUIT,DI:MASTER SLAVE TYPE D F-F	80009	156-0228-00

[1]Option 7
[2]Option 1

Ckt No.	Tektronix Part No.	Serial/Model No. Eff	Dscont	Name & Description	Mfr Code	Mfr Part Number
U2350	156-0923-00			MICROCIRCUIT,DI:PRESCALER DIVBY 4 AT 1GHZ	04713	MC1697P
U3110	150-1025-00			LAMP,LED,DSPL:3 DIGIT,7 SEGMENT,RED	50579	DL883A
U3120	150-1025-00			LAMP,LED,DSPL:3 DIGIT,7 SEGMENT,RED	50579	DL883A
U3130	150-1025-00			LAMP,LED,DSPL:3 DIGIT,7 SEGMENT,RED	50579	DL883A
U4140A-D[1]	156-0057-00			MICROCIRCUIT,DI:QUAD 2-INPUT NAND GATE	07263	7401PC
U4130	156-0352-00			MICROCIRCUIT,DI:DUAL COMPL PAIR PLUS INVER	02735	CD4007AE
U4220	156-0112-00			MICROCIRCUIT,DI:QUAD 2-INPUT POS NAND GATE	01295	SN7426N
U4230	156-0704-00			MICROCIRCUIT,LI:PHASE LOCK LOO	04713	MC14046CP
U4240A-F[1]	156-0058-00			MICROCIRCUIT,DI:HEX.INVERTER	01295	SN7404N
U4322	156-0910-00			MICROCIRCUIT,DI:DUAL DECADE COUNTER	80009	156-0910-00
U4330[1]	156-0731-00			MICROCIRCUIT,DI:DUAL J-K FF W/PRESET CLR	80009	156-0731-00
U4340A-D[1]	156-0057-00			MICROCIRCUIT,DI:QUAD 2-INPUT NAND GATE	07263	7401PC
VR1230	152-0279-00			SEMICOND DEVICE:ZENER,0.4W,5.1V,5%	80009	152-0279-00
VR1310	152-0168-00			SEMICOND DEVICE:ZENER,0.4W,12V,5%	04713	1N963B
VR4310	152-0055-00			SEMICOND DEVICE:ZENER,0.4W,11V,5%	04713	1N962B
Y1410	158-0129-00			XTAL UNIT,QTZ:10MHZ,0.001%,PARALLEL	33096	PB1109
Y1430[1,2]	119-0894-00			OSCILLATOR,RF:10MHZ,24VDC	80009	119-0894-00

[1]Option 7
[2]Option 1

DIAGRAMS AND CIRCUIT BOARD ILLUSTRATIONS

Symbols and Reference Designators

Electrical components shown on the diagrams are in the following units unless noted otherwise:

Capacitors = Values one or greater are in picofarads (pF).
Values less than one are in microfarads (μF).
Resistors = Ohms (Ω).

Graphic symbols and class designation letters are based on ANSI Standard Y32.2-1975.

Logic symbology is based on ANSI Y32.14-1973 in terms of positive logic. Logic symbols depict the logic function performed and may differ from the manufacturer's data.

Abbreviations are based on ANSI Y1.1-1972.
Other ANSI standards that are used in the preparation of diagrams by Tektronix, Inc. are:

Y14.15, 1966	Drafting Practices.
Y14.2, 1973	Line Conventions and Lettering.
Y10.5, 1968	Letter Symbols for Quantities Used in Electrical Science and Electrical Engineering.

The following prefix letters are used as reference designators to identify components or assemblies on the diagrams.

A	Assembly, separable or repairable (circuit board, etc)	H	Heat dissipating device (heat sink, heat radiator, etc)	S	Switch or contactor
AT	Attenuator, fixed or variable	HR	Heater	T	Transformer
B	Motor	HY	Hybrid circuit	TC	Thermocouple
BT	Battery	J	Connector, stationary portion	TP	Test point
C	Capacitor, fixed or variable	K	Relay	U	Assembly, inseparable or non-repairable (integrated circuit, etc.)
CB	Circuit breaker	L	Inductor, fixed or variable	V	Electron tube
CR	Diode, signal or rectifier	M	Meter	VR	Voltage regulator (zener diode, etc.)
DL	Delay line	P	Connector, movable portion	W	Wirestrap or cable
DS	Indicating device (lamp)	Q	Transistor or silicon-controlled rectifier	Y	Crystal
E	Spark Gap, Ferrite bead	R	Resistor, fixed or variable	Z	Phase shifter
F	Fuse	RT	Thermistor		
FL	Filter				

The following special symbols may appear on the diagrams:

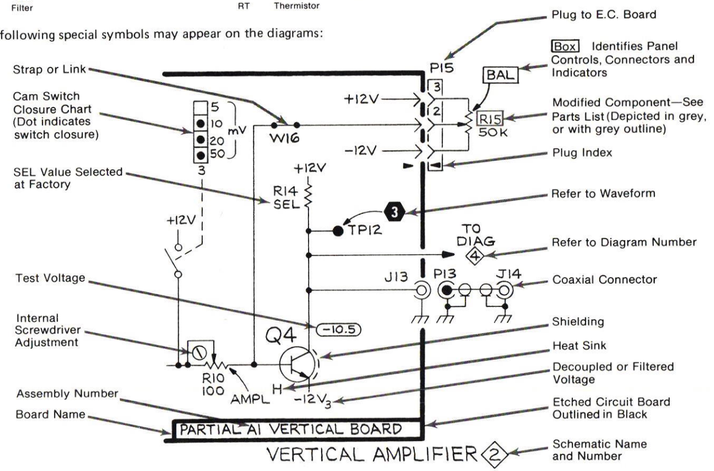

@

DC 508 BLOCK DIAGRAM

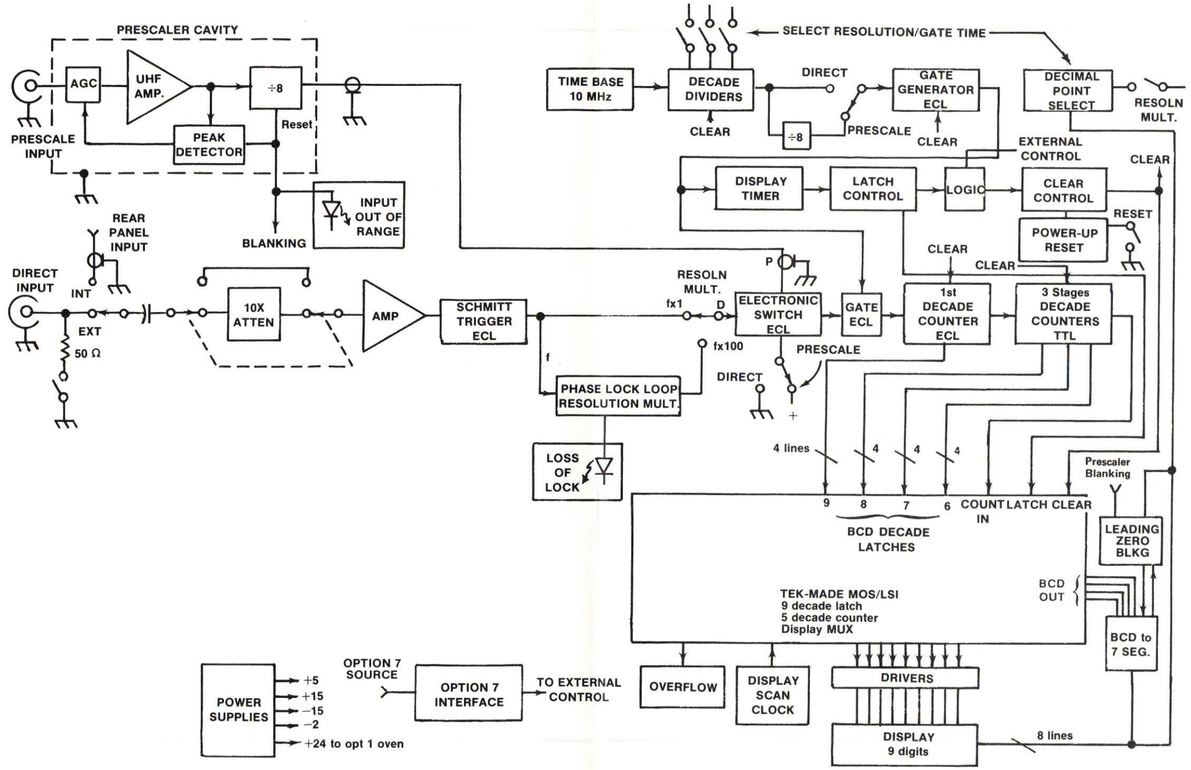

PRESCALER BLOCK DIAGRAM

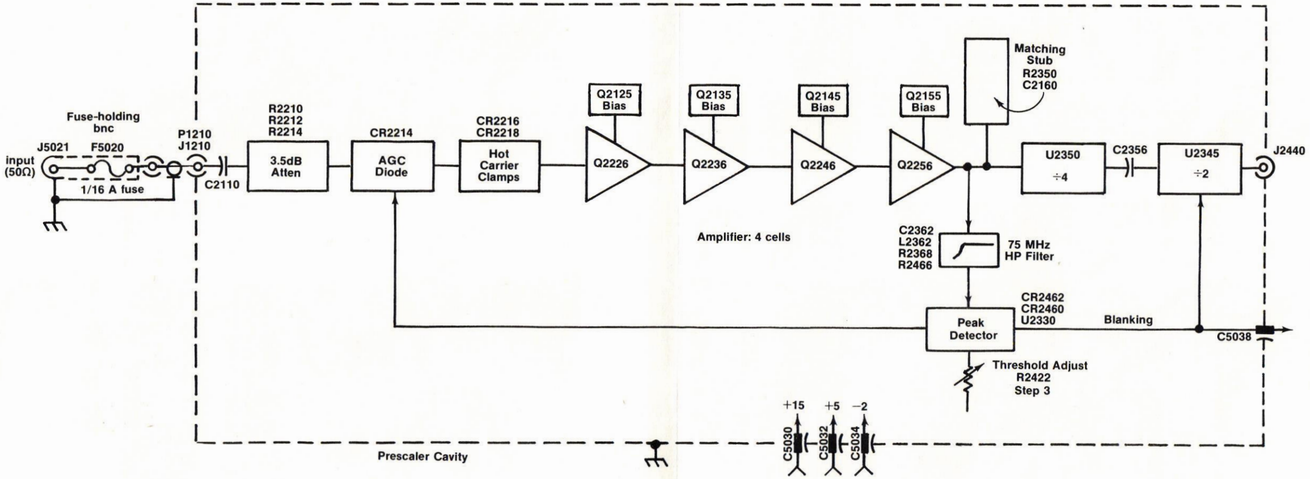

MAIN BOARD (Front side)

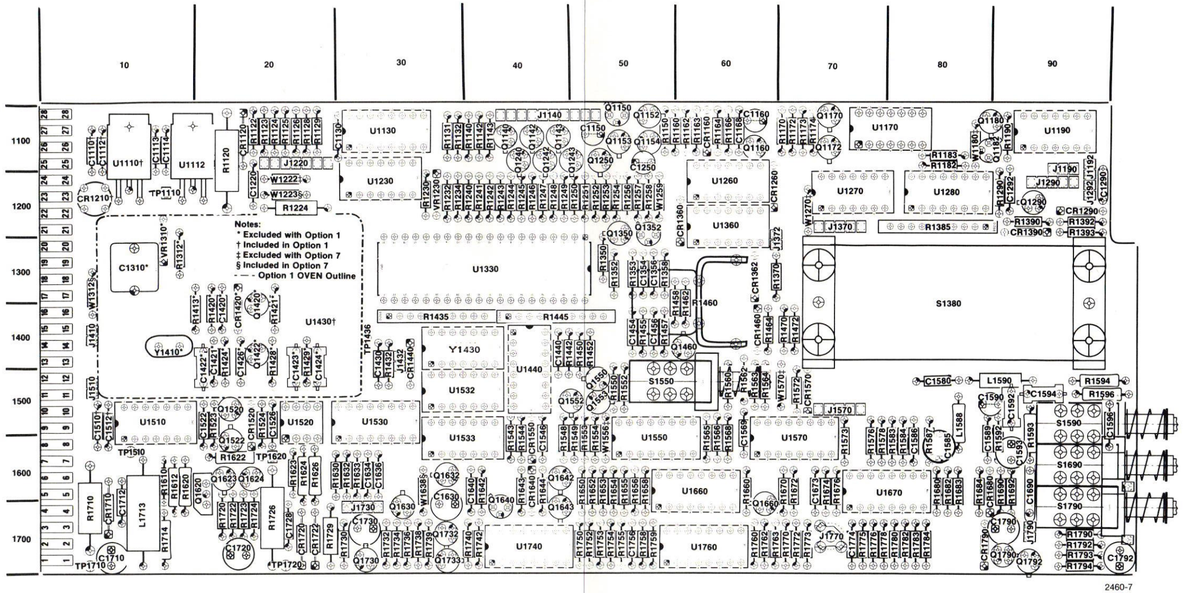

Fig. 9-1.

TIMING DIAGRAMS

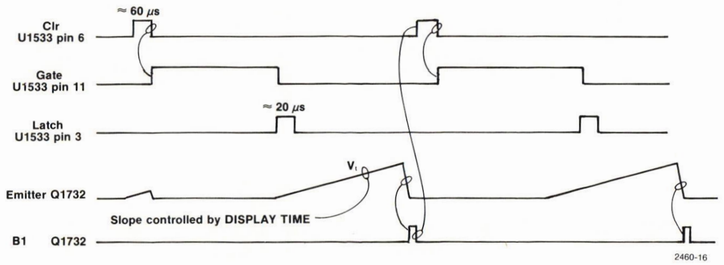

Fig. 9-2. Measurement Cycle Timing.

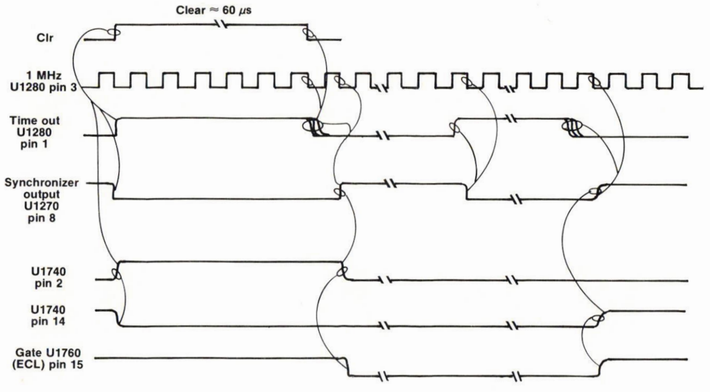

Fig. 9-3. Gate Generator Timing.

MAIN BOARD (Back side)

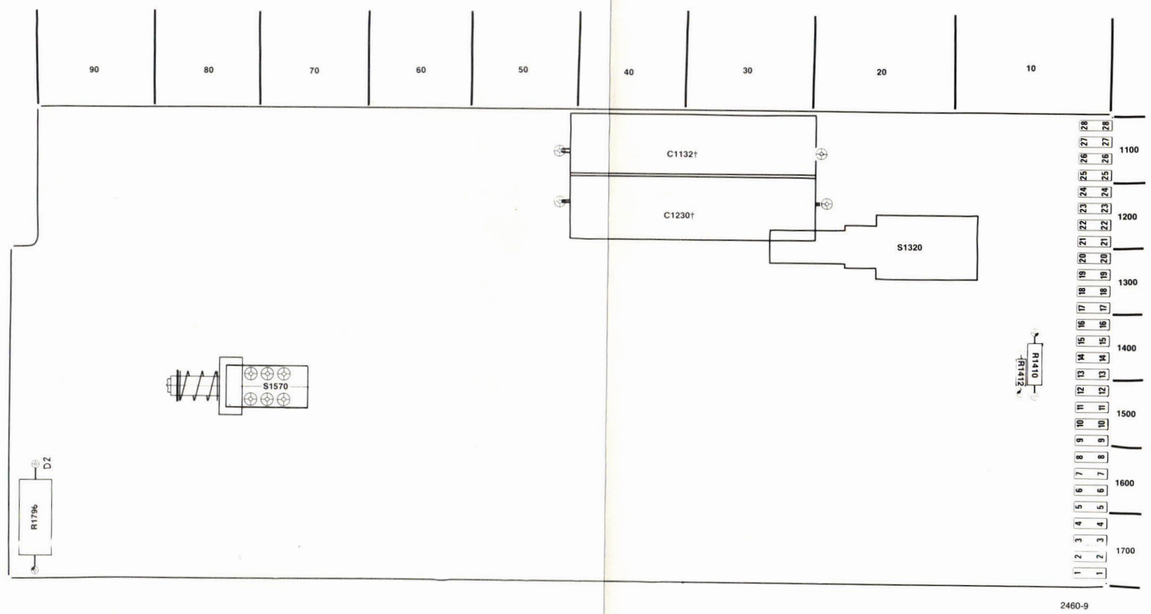

Fig. 9-4.

REAR INTERFACE CONNECTIONS

Remarks	Maximum Recommended Loads	Active Level	Output or Input	PIN B	Rear view	PIN A	Output or Input	Active Level	Maximum Recommended Loads	Remarks
	5TTL	HI	Gate Output	28		28				
	9TTL	HI	Decimal Point Scanned Output	27		27				
				26		26	$\overline{\text{Reset}}$ Input/Output	Low	2TTL	Input 24 mA Output 3.2 mA
				25		25	$\overline{\text{TS-O}}$ Output	Low	5TTL	
	2TTL	⊓	Internal Scan Clock Output	24		24				
	2TTL	HI	Overflow Output	23	Measurement Barrier Slot	23	$\overline{\text{Counter}}$ $\overline{\text{Identify}}$ Output	Low	10TTL	Low=Counter Present
				22		22				
	5TTL	HI	BCD (2) Output	21		21				
	5TTL	HI	BCD (8) Output	20		20	BCD (4) Output	HI	5TTL	
	1TTL	⊓	$\overline{\text{Data}}$ $\overline{\text{Good}}$ (Latch) Output	19		19	BCD (1) Output	HI	5TTL	
HI=Continuous Count	1TTL	⊓	Start Count Input	18		18	$\overline{\text{Gate}}$ Output—Option 7	Low	5TTL	
Ground		Low	$\overline{\text{Counter}}$ $\overline{\text{Identify}}$ Output—Option 7	17		17	Internal Input Ground			
	1TTL	Low	$\overline{\text{100 kHz}}$ $\overline{\text{Resolution}}$ Input—Option 7	16		16	Direct Internal Input		50Ω	Direct Input Only
		Low	$\overline{\text{Sweep}}$ Input—Option 7	15		15				
		Low	$\overline{\text{Source}}$ $\overline{\text{Identify}}$ Input—Option 7	14		14	External Clock Input		Rin=1 kΩ	TTL
			25 Vac winding	13		13	25 Vac winding			
			33.5 V filtered dc	12		12*	33.5 V filtered dc			
			Collector Lead of PNP Series-Pass	11*		11*	Base Lead of PNP Series-Pass			
			Transformer/ shield lead	10		10*	Emitter Lead of PNP Series-Pass			
			33.5 V common return	9*		9	33.5 V common return			
			33.5 filtered dc	8*		8	33.5 V filtered dc			
			Collector Lead of NPN Series-Pass	7*	TM 500 Barrier Slot	7*	Emitter Lead of NPN Series-Pass			
			No connection	6		6*	Base Lead of NPN Series-Pass			
			17.5 Vac winding	5		5	17.5 Vac winding			
			11.5 V common return	4		4*	11.5 V common return			
			11.5 V common return	3		3*	11.5 V common return			
			11.5 V filtered dc	2*		2	11.5 V filtered dc			
			25 Vac winding	1	Rear-View of plug-in	1	25 Vac winding			
				B		A				

2460-10

Fig. 9-5.

Assignments listed for pins 1A—13A and 1B—13B are available in all power modules; however only those pins marked with an asterisk (*) are used by the DC 508.

@

ADJUSTMENT LOCATIONS

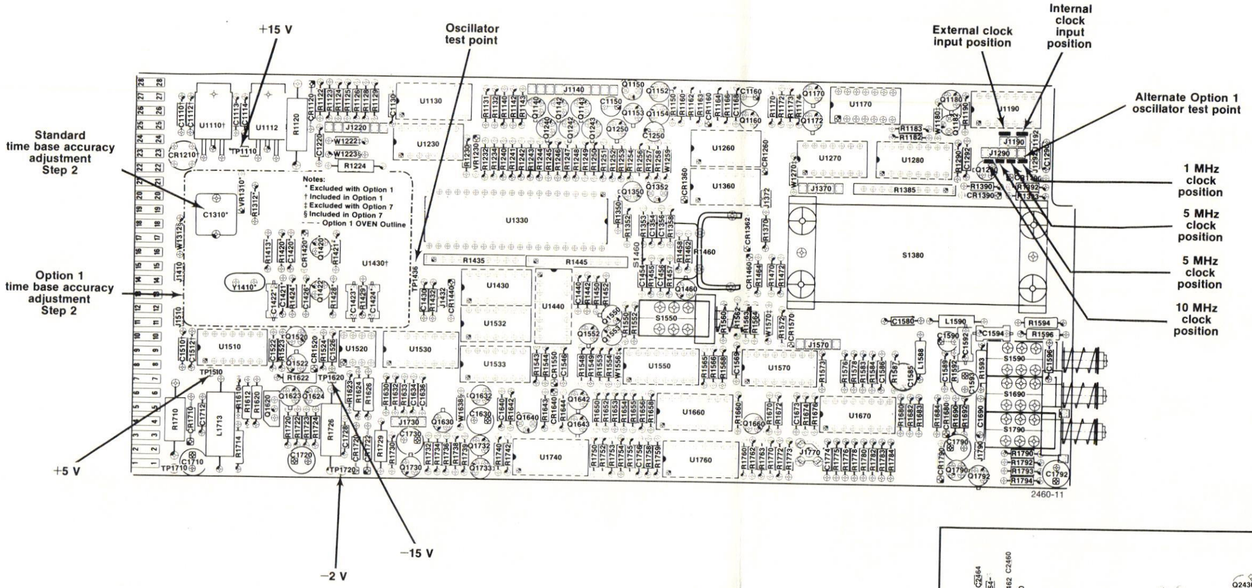

Fig. 9-6.

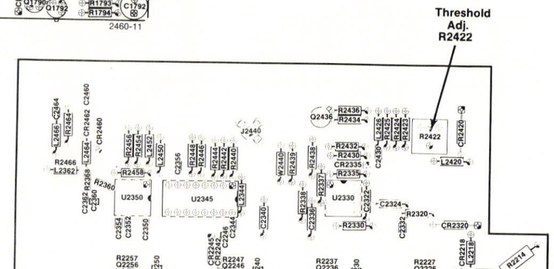

RESOLUTION MULTIPLIER BOARD

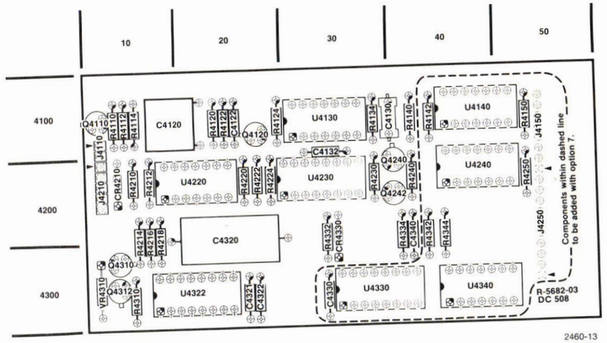

2460-13

Fig. 9-7.

Table 9-1
GRID LOCATIONS

CKT NO	GRID LOC	CKT NO	GRID LOC	CKT NO	GRID LOC	CKT NO	GRID LOC
C1580	H7	Q1790	E6	R1776	H6	S1590	D5
C1585	E6	Q1792	E7	R1778	H6	S1690	C5
C1586	J6	Q4110	H2	R1780	H6	S1790	B6
C1589	D6	Q4120	F2	R1783	F6		
C1590	F7	Q4240	E3	R1784	E5		
C1592	D6	Q4242	H3	R1790	C7	TP1710	A6
C1593	E6	Q4310	C3	R1792	E7		
C1594	D6	Q4312	C1	R1793	E7		
C1673	J6			R1794	E7	U1570A	L7
C1690	C6	R1410	B7	R1796	B6	U1570B	K7
C1774	H7	R1412	B7	R2414	J3	U1570C	K6
C1790	E6	R1562	B3	R4110	H2	U1570D	L6
C1792	E7	R1563	L6	R4112	H2	U1670	H8
C4120	E4	R1564	L6	R4114	H2	U1670A	H6
C4122	F2	R1573	J8	R4120	D3	U1670B	F6
C4130	E3	R1576	J6	R4122	E4	U1670C	J6
C4132	D3	R1578	J6	R4124	E4	U4130A	E3
C4321	C2	R1583	H6	R4134	F3	U4130B	F3
C4322	D2	R1584	J6	R4140	E3	U4130C	E3
C4340	C2	R1587	E6	R4210	J3	U4220A	H3
		R1592	D6	R4212	J4	U4220B	E5
		R1593	D6	R4216	H3	U4220C	C3
CR1570	J7	R1594	D6	R4218	C3	U4220D	J3
CR1680	E6	R1596	D6	R4220	D3	U4230	D3
CR1790	E6	R1670	L8	R4222	D3	U4322A	F4
CR4210	C3	R1672	K8	R4224	F2	U4322B	E4
CR4320	C2	R1674	B8	R4230	F3		
CR4330	H3	R1676	J6	R4240	E3		
		R1680	F6	R4310	C1		
		R1682	F6	R4332	H3		
DS5023	K1	R1683	F6	R4334	H3	VR4310	C2
		R1684	F6	R5002	A6		
		R1690	E6				
L1588	E8	R1692	F6	S1380	J7		
L1590	H7	R1775	H5	S1570A	K5		

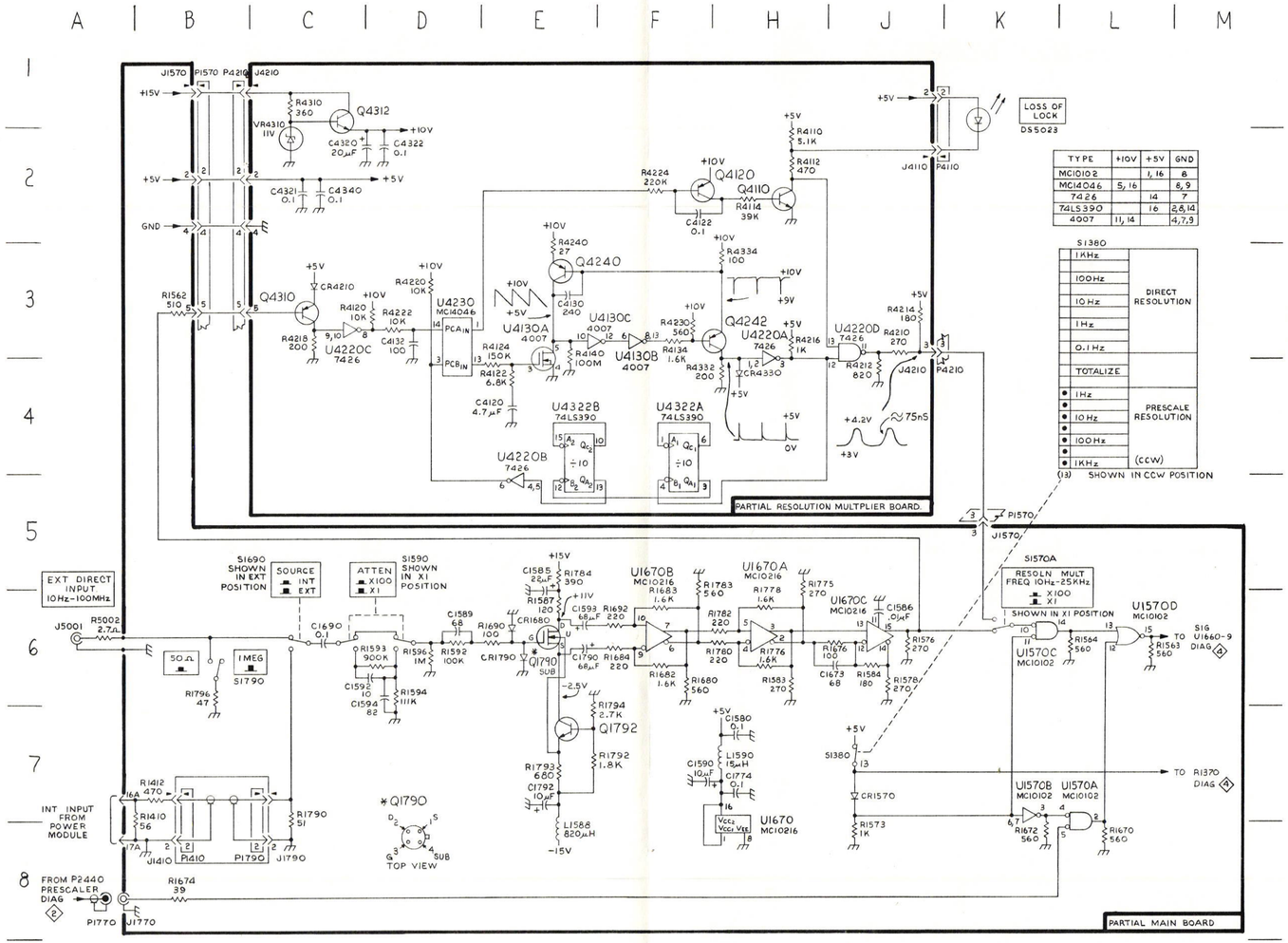

DC508 @ DIRECT INPUT & RESOLUTION MULTIPLIER 1 JP

PRESCALER BOARD

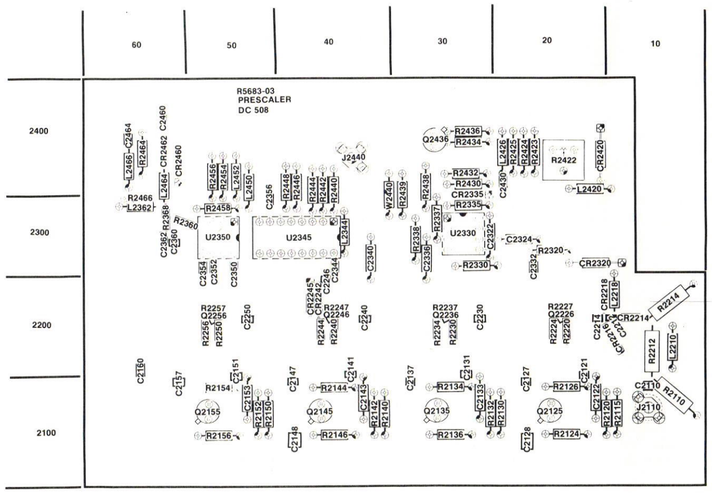

Fig. 9-8.

DISPLAY BOARD

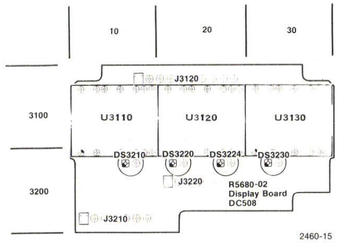

Fig. 9-9.

@

Table 9-2
GRID LOCATIONS

CKT NO	GRID LOC	CKT NO	GRID LOC	CKT NO	GRID LOC	CKT NO	GRID LOC
C2110	B2	C5030	B6	Q2226	D2	R2257	E5
C2121	D2	C5032	B7	Q2236	F2	R2320	H6
C2122	D2	C5034	B8	Q2246	J2	R2330	J5
C2127	E1	C5038	M5	Q2256	E4	R2335	K4
C2128	D1			Q2436	L5	R2337	J6
C2131	F2					R2338	J7
C2133	F2	CR2214	C2	R2115	D2	R2360	H4
C2137	H1	CR2216	C3	R2120	D1	R2368	F5
C2141	J2	CR2218	C2	R2124	D1	R2422	H7
C2143	J1	CR2242	K2	R2126	D2	R2423	H7
C2147	K1	CR2245	K2	R2130	F2	R2424	H7
C2148	J1	CR2320	B6	R2132	F1	R2425	H6
C2151	E4	CR2335	K4	R2134	F2	R2430	K4
C2153	D4	CR2420	B8	R2136	F1	R2432	K4
C2157	E3	CR2460	J7	R2140	J1	R2434	L5
C2160	H5	CR2462	H5	R2142	J1	R2436	K5
C2212	C2			R2144	J2	R2438	J5
C2214	C2			R2146	J1	R2439	J7
C2240	H2	F5020	B2	R2150	D4	R2442	L4
C2246	K2			R2152	D4	R2444	L5
C2250	L2			R2154	E4	R2446	L4
C2322	C8	L2210	B6	R2156	E3	R2448	L5
C2324	J6	L2218	H6	R2210	B3	R2454	J4
C2330	E2	L2344	B7	R2212	B2	R2456	J5
C2332	D7	L2362	H6	R2214	B3	R2458	H4
C2336	J5	L2420	B8	R2220	D2	R2464	H5
C2340	D7	L2426	B6	R2224	D2	R2466	F5
C2344	E7	L2450	C8	R2227	D3		
C2350	F7	L2452	B7	R2230	F2		
C2352	J5	L2464	H5	R2234	F2	U2330	D7
C2354	F7	L2466	C8	R2237	F2	U2330A	J5
C2356	K4			R2240	J2	U2330B	J6
C2360	H4			R2440	L4	U2345	L4
C2362	F5	Q2125	D2	R2244	J2	U2350A	J4
C2430	D7	Q2135	F1	R2247	J2		
C2460	H5	Q2145	J1	R2250	D4	W2440	C8
C2464	C8	Q2155	E4	R2256	E4		

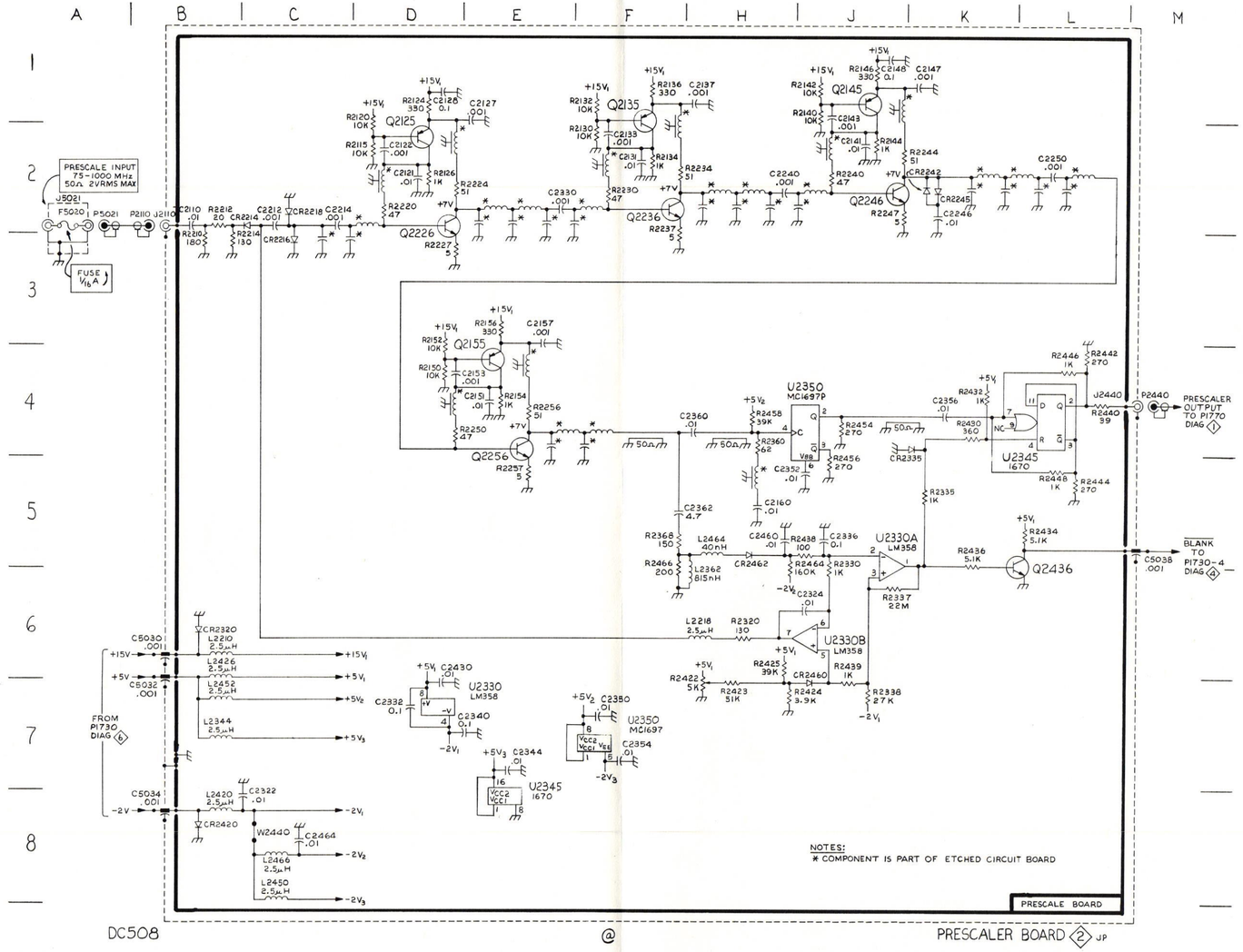

DC508 @ PRESCALER BOARD 2 JP

PRESCALER

Table 9-3
GRID LOCATIONS

CKT NO	GRID LOC	CKT NO	GRID LOC	CKT NO	GRID LOC	CKT NO	GRID LOC
C1110	D7	Q1290	C3	R1424	H7	U1190	C5
C1112	C7	Q1420	J8	R1428	H8	U1270B	H4
C1132	C7	Q1422	H8	R1429	H8	U1280	F4
C1230	C7	Q1660	L4	R1572	H4	U1740A	J4
C1290	B3			R1660	M4	U1740B	K4
C1292	F4			R1750	K4	U1760A	K4
C1310	H8	R1182	C3	R1752	J5	U1760B	L4
C1420	J7	R1183	E6	R1753	J4		
C1421	J7	R1190	F6	R1754	J4		
C1422	H8	R1290	F6	R1755	J4	VR1310	H7
C1423	H8	R1312	H7	R1758	H4		
C1424	H8	R1385	E5	R1760	J4		
C1426	J7	R1385A	E6	R1762	L4	W1180	F5
C1510	B7	R1385B	E5	R1763	L4		
C1512	B7	R1385C	E4	R1770	L4		
		R1385E	E4	R1772	H4	Y1410	F8
CR1210	B7	R1385F	F4	R1773	K5	Y1430	E8
CR1290	B3	R1385J	D6				
CR1390	L3	R1390	F4				
CR1420	J7	R1392	B3	TP1436	B5		
		R1393	L4				
		R1412	J7				
Q1180	F6	R1413	H8	U1110	D7		
Q1182	E6	R1421	J8	U1170	D6		

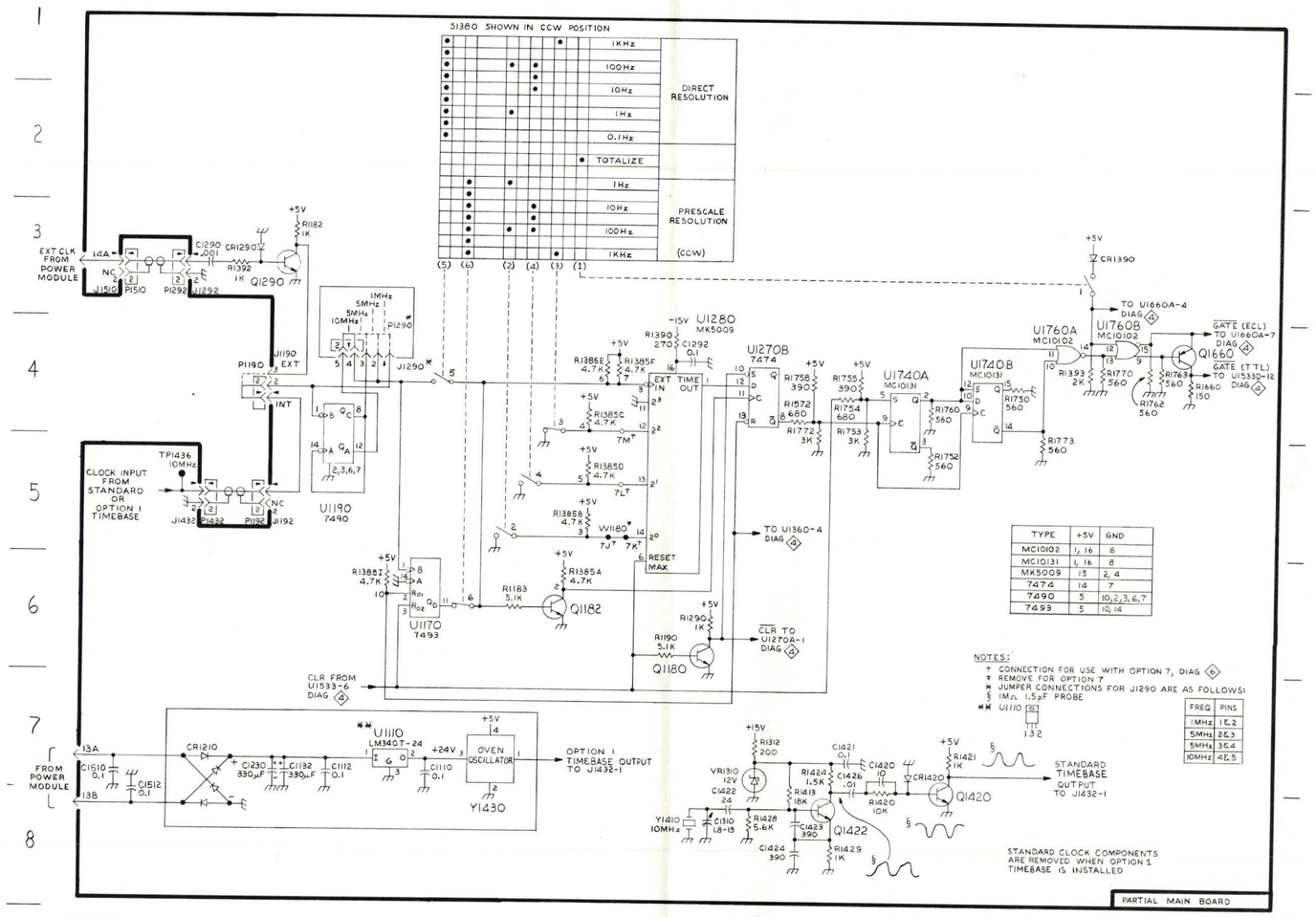

TYPE	+5V	GND
MC10102	1, 16	8
MC10131	1, 16	8
MK5009	15	2, 4
7474	14	7
7490	5	10,2,3,6,7
7493	5	10, 14

FREQ	PINS
1MHz	1&2
5MHz	2&3
5MHz	3&4
10MHz	4&5

DC508 @ GATE GENERATOR & TIME BASES 3 JP

Table 9-4
GRID LOCATIONS

CKT NO	GRID LOC	CKT NO	GRID LOC	CKT NO	GRID LOC	CKT NO	GRID LOC
C1160	D8	Q1630	E6	R1452	D1	R1742	D6
C1250	D8	Q1632	C6	R1455	K6	R1759	A2
C1354	K7	Q1640	B5	R1457	K5		
C1356	L7	Q1642	H3	R1458	K7	S1460	D5
C1430	F4	Q1643	E1	R1460	D6	S1550	F8
C1440	K4	Q1732	D6	R1462	K5	S1690A	D3
C1454	K1	Q1733	D6	R1464	C5		
C1456	L5			R1543	A6		
C1460	C5			R1544	B6	U1270A	B8
C1546	D1	R1150	E7	R1548	H3	U1360A	K8
C1596	D3	R1160	E8	R1549	E2	U1430	J3
C1630	D6	R1162	E7	R1550	F2	U1440	J4
C1636	J6	R1163	E7	R1552	F2	U1530A	J7
		R1164	D7	R1553	E2	U1530B	F4
CR1160	E7	R1166	D7	R1554	F2	U1532A	F4
CR1260	D8	R1168	D7	R1560	E2	U1532B	E4
CR1360	K8	R1170	D7	R1565	B2	U1532C	E3
CR1362	B8	R1224	L1	R1566	B2	U1532D	E4
CR1440	K8	R1256	L7	R1568	F3	U1533A	K7
CR1460	K8	R1350	H3	R1632	J6	U1533B	H4
CR1550	E5	R1352	K6	R1633	D6	U1533C	J7
CR1640	C6	R1353	K7	R1642	C5	U1533D	B6
		R1358	L7	R1643	B6	U1550	D2
		R1370	A7	R1644	C6	U1660A	B2
DS5028	B7	R1385H	K7	R1650	D1	U1660B	C2
		R1385I	K8	R1652	D2		
		R1432	F4	R1653	F3		
Q1152	E7	R1435	K3	R1654	D2	VR1230	L1
Q1154	E8	R1435A	E4	R1655	B1		
Q1160	D7	R1435B	E4	R1656	C2		
Q1350	L7	R1435C	E3	R1658	E2	W1222	D3
Q1352	K7	R1435E	K8	R1734	E6	W1223	D3
Q1460	K5	R1442	D1	R1736	E6	W1259	F7
Q1550	D1	R1445	K4	R1738	C6	W1312	D3
Q1552	E2	R1445H	M6	R1739	D6	W1566	D2
Q1553	F2	R1450	D1	R1740	D6	W1638	D3

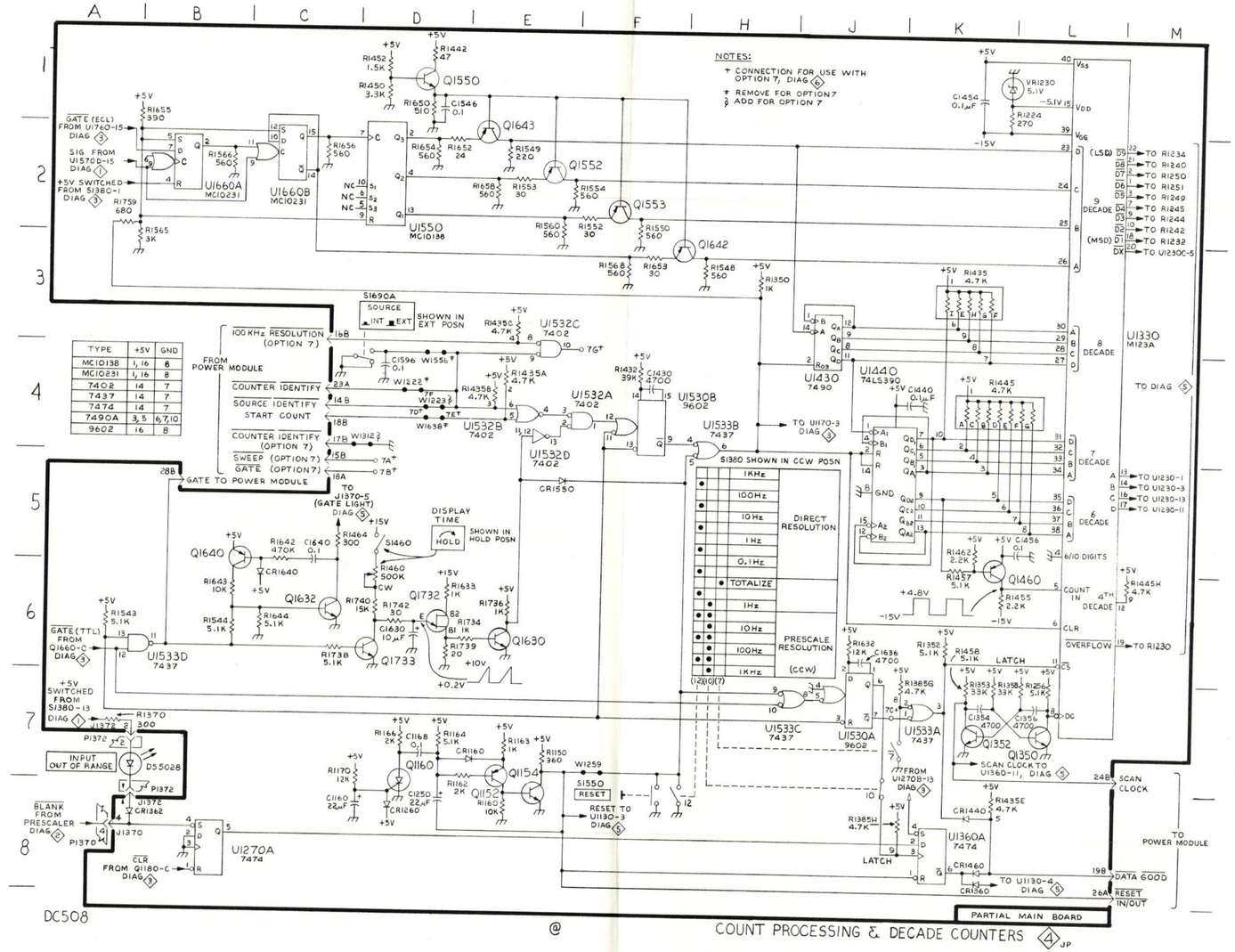

Table 9-5
GRID LOCATIONS

CKT NO	GRID LOC	CKT NO	GRID LOC	CKT NO	GRID LOC	CKT NO	GRID LOC
C1130	C7	R1124	H6	R1245	H2	U1230C	B8
		R1125	H6	R1246	H2	U1230D	D4
DS3210	E5	R1126	H6	R1247	J2	U1230E	E7
DS3220	F5	R1128	H6	R1248	J2	U1230F	E7
DS3224	F5	R1129	H6	R1249	H2	U1260A	B8
DS3230	F5	R1131	H6	R1250	K2	U1260B	D8
		R1132	F7	R1251	J2	U1260C	D7
Q1140	F2	R1140	F6	R1252	J2	U1360B	E8
Q1142	H2	R1142	F7	R1253	K2	U3110	H3
Q1143	J2	R1143	D4	R1254	K2	U3120	K3
Q1150	L2	R1172	D8	R1257	L2	U3130	L3
Q1153	L2	R1173	E6	R1258	B8		
Q1170	E6	R1174	E5	R1470	F5	W1270	D4
Q1172	D8	R1230	D8	R1472	F5	W1570	F6
Q1240	H2	R1232	F2				
Q1242	J2	R1234	K2	S1380	A6		
Q1243	J2	R1240	K2	S1570B	D2		
Q1250	K2	R1241	F2				
		R1242	F2	U1130	H6		
R1122	H6	R1243	F2	U1230A	E7		
R1122	H6	R1244	F2	U1230B	E7		

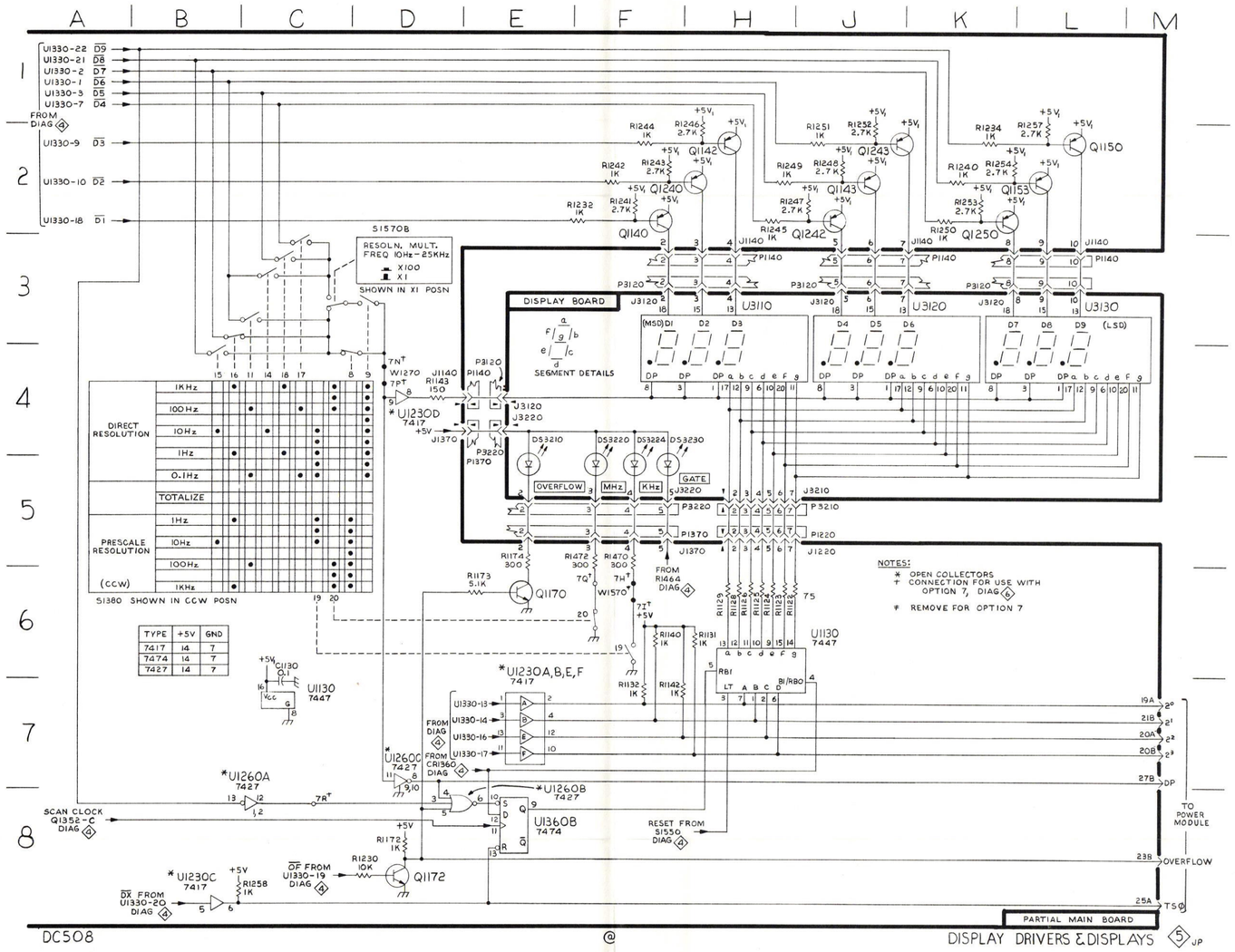

Table 9-6
GRID LOCATIONS

CKT NO	GRID LOC	CKT NO	GRID LOC	CKT NO	GRID LOC	CKT NO	GRID LOC
C1113	F2	L1713	C3	R1714	F4	U1112	F2
C1114	H2			R1720	H6	U1510	E4
C1150	L3			R1722	F7	U1520	K5
C1220	K4	Q1520	F6	R1723	H7	U4140A	C4
C1522	H4	Q1522	F6	R1724	H6	U4140B	B3
C1526	K4	Q1620	K6	R1726	H7	U4140C	B3
C1569	K4	Q1623	H7	R1729	K6	U4140D	B4
C1634	L6	Q1624	H6	R1730	K6	U4042B	B5
C1710	J4	Q1730	K5	R1732	J6	U4240C	B7
C1712	K4			R4142	B3	U4240D	B5
C1720	J7	R1120	F2	R4150	C4	U4240E	B4
C1728	F7	R1523	F6	R4344	C5	U4240F	B4
C1730	L6	R1524	F6			U4250	B5
C1756	K4	R1610	H4	S1320	E2	U4330	B6
C4330	B7	R1612	F4			U4340A	B4
		R1620	H6			U4340B	C5
		R1622	J6	TP1110	L2	U4340C	C5
CR1120	H2	R1623	K5	TP1510	L3	U4340D	C5
CR1520	F6	R1624	J6	TP1620	K7	U4342	B6
CR1710	K3	R1626	J5	TP1720	L6		
CR1720	J8	R1630	K5				
CR1722	L6	R1710	J3				

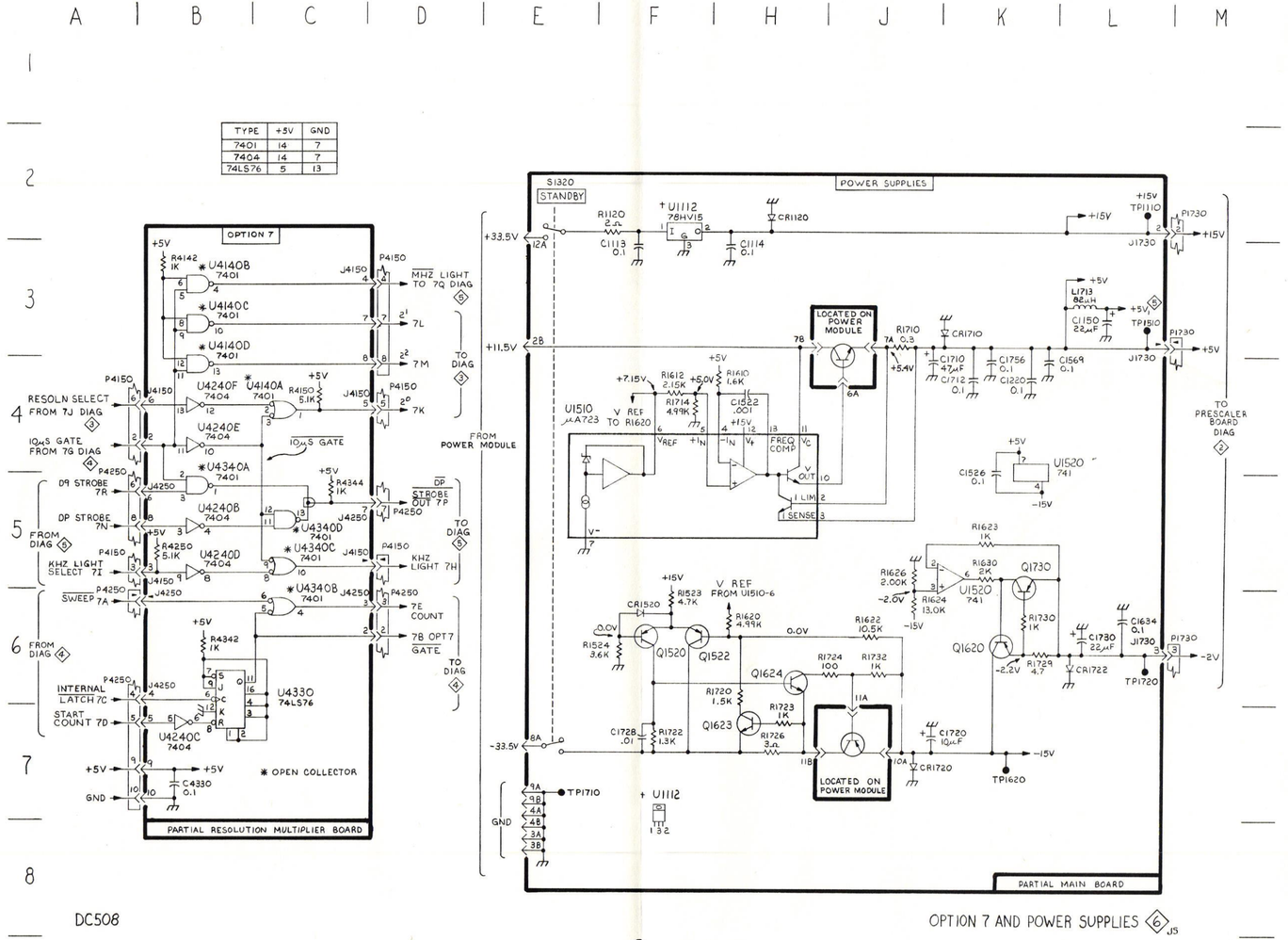

REPLACEABLE MECHANICAL PARTS

PARTS ORDERING INFORMATION

Replacement parts are available from or through your local Tektronix, Inc. Field Office or representative.

Changes to Tektronix instruments are sometimes made to accommodate improved components as they become available, and to give you the benefit of the latest circuit improvements developed in our engineering department. It is therefore important, when ordering parts, to include the following information in your order: Part number, instrument type or number, serial number, and modification number if applicable.

If a part you have ordered has been replaced with a new or improved part, your local Tektronix, Inc. Field Office or representative will contact you concerning any change in part number.

Change information, if any, is located at the rear of this manual.

SPECIAL NOTES AND SYMBOLS

X000	Part first added at this serial number
00X	Part removed after this serial number

FIGURE AND INDEX NUMBERS

Items in this section are referenced by figure and index numbers to the illustrations.

INDENTATION SYSTEM

This mechanical parts list is indented to indicate item relationships. Following is an example of the indentation system used in the description column.

1 2 3 4 5 Name & Description

Assembly and/or Component
Attaching parts for Assembly and/or Component
- - - * - - -
Detail Part of Assembly and/or Component
Attaching parts for Detail Part
- - - * - - -
Parts of Detail Part
Attaching parts for Parts of Detail Part
- - - * - - -

Attaching Parts always appear in the same indentation as the item it mounts, while the detail parts are indented to the right. Indented items are part of, and included with, the next higher indentation. The separation symbol - - - * - - - indicates the end of attaching parts.

Attaching parts must be purchased separately, unless otherwise specified.

ITEM NAME

In the Parts List, an Item Name is separated from the description by a colon (:). Because of space limitations, an Item Name may sometimes appear as incomplete. For further Item Name identification, the U.S. Federal Cataloging Handbook H6-1 can be utilized where possible.

ABBREVIATIONS

"	INCH
#	NUMBER SIZE
ACTR	ACTUATOR
ADPTR	ADAPTER
ALIGN	ALIGNMENT
AL	ALUMINUM
ASSEM	ASSEMBLED
ASSY	ASSEMBLY
ATTEN	ATTENUATOR
AWG	AMERICAN WIRE GAGE
BD	BOARD
BRKT	BRACKET
BRS	BRASS
BRZ	BRONZE
BSHG	BUSHING
CAB	CABINET
CAP	CAPACITOR
CER	CERAMIC
CHAS	CHASSIS
CKT	CIRCUIT
COMP	COMPOSITION
CONN	CONNECTOR
COV	COVER
CPLG	COUPLING
CRT	CATHODE RAY TUBE
DEG	DEGREE
DWR	DRAWER
ELCTRN	ELECTRON
ELEC	ELECTRICAL
ELCTLT	ELECTROLYTIC
ELEM	ELEMENT
EPL	ELECTRICAL PARTS LIST
EQPT	EQUIPMENT
EXT	EXTERNAL
FIL	FILLISTER HEAD
FLEX	FLEXIBLE
FLH	FLAT HEAD
FLTR	FILTER
FR	FRAME or FRONT
FSTNR	FASTENER
FT	FOOT
FXD	FIXED
GSKT	GASKET
HDL	HANDLE
HEX	HEXAGON
HEX HD	HEXAGONAL HEAD
HEX SOC	HEXAGONAL SOCKET
HLCPS	HELICAL COMPRESSION
HLEXT	HELICAL EXTENSION
HV	HIGH VOLTAGE
IC	INTEGRATED CIRCUIT
ID	INSIDE DIAMETER
IDENT	IDENTIFICATION
IMPLR	IMPELLER
IN	INCH
INCAND	INCANDESCENT
INSUL	INSULATOR
INTL	INTERNAL
LPHLDR	LAMPHOLDER
MACH	MACHINE
MECH	MECHANICAL
MTG	MOUNTING
NIP	NIPPLE
NON WIRE	NOT WIRE WOUND
OBD	ORDER BY DESCRIPTION
OD	OUTSIDE DIAMETER
OVH	OVAL HEAD
PH BRZ	PHOSPHOR BRONZE
PL	PLAIN or PLATE
PLSTC	PLASTIC
PN	PART NUMBER
PNH	PAN HEAD
PWR	POWER
RCPT	RECEPTACLE
RES	RESISTOR
RGD	RIGID
RLF	RELIEF
RTNR	RETAINER
SCH	SOCKET HEAD
SCOPE	OSCILLOSCOPE
SCR	SCREW
SE	SINGLE END
SECT	SECTION
SEMICOND	SEMICONDUCTOR
SHLD	SHIELD
SHLDR	SHOULDERED
SKT	SOCKET
SL	SLIDE
SLFLKG	SELF-LOCKING
SLVG	SLEEVING
SPR	SPRING
SQ	SQUARE
SST	STAINLESS STEEL
STL	STEEL
SW	SWITCH
T	TUBE
TERM	TERMINAL
THD	THREAD
THK	THICK
TNSN	TENSION
TPG	TAPPING
TRH	TRUSS HEAD
V	VOLTAGE
VAR	VARIABLE
W/	WITH
WSHR	WASHER
XFMR	TRANSFORMER
XSTR	TRANSISTOR

CROSS INDEX—MFR. CODE NUMBER TO MANUFACTURER

Mfr. Code	Manufacturer	Address	City, State, Zip
00779	AMP, INC.	P O BOX 3608	HARRISBURG, PA 17105
01295	TEXAS INSTRUMENTS, INC., SEMICONDUCTOR GROUP	P O BOX 5012, 13500 N CENTRAL EXPRESSWAY	DALLAS, TX 75222
08261	SPECTRA-STRIP CORP.	7100 LAMPSON AVE.	GARDEN GROVE, CA 92642
22526	BERG ELECTRONICS, INC.	YOUK EXPRESSWAY	NEW CUMBERLAND, PA 17070
24931	SPECIALTY CONNECTOR CO., INC.	3560 MADISON AVE.	INDIANAPOLIS, IN 46227
49671	RCA CORPORATION	30 ROCKEFELLER PLAZA	NEW YORK, NY 10020
55210	GETTIG ENG. AND MFG. COMPANY	PO BOX 85, OFF ROUTE 45	SPRING MILLS, PA 16875
71159	BRISTOL SOCKET SCREW, DIV. OF AMERICAN CHAIN AND CABLE CO., INC.	P O BOX 2244, 40 BRISTOL ST.	WATERBURY, CT 06720
73743	FISCHER SPECIAL MFG. CO.	446 MORGAN ST.	CINCINNATI, OH 45206
73803	TEXAS INSTRUMENTS, INC., METALLURGICAL MATERIALS DIV.	34 FOREST STREET	ATTLEBORO, MA 02703
74445	HOLO-KROME CO.	31 BROOK ST. WEST	HARTFORD, CT 06110
78189	ILLINOIS TOOL WORKS, INC. SHAKEPROOF DIVISION	ST. CHARLES ROAD	ELGIN, IL 60120
78471	TILLEY MFG. CO.	900 INDUSTRIAL RD.	SAN CARLOS, CA 94070
79136	WALDES, KOHINOOR, INC.	47-16 AUSTEL PLACE	LONG ISLAND CITY, NY 11101
80009	TEKTRONIX, INC.	P O BOX 500	BEAVERTON, OR 97077
82647	TEXAS INSTRUMENTS, INC., CONTROL PRODUCTS DIV.	34 FOREST ST.	ATTLEBORO, MA 02703
83385	CENTRAL SCREW CO.	2530 CRESCENT DR.	BROADVIEW, IL 60153
98291	SEALECTRO CORP.	225 HOYT	MAMARONECK, NY 10544

Fig. & Index No.	Tektronix Part No.	Serial/Model No. Eff	Dscont	Qty	1 2 3 4 5 Name & Description	Mfr Code	Mfr Part Number
1-1	337-1399-05			2	SHIELD,ELEC:SIDE	80009	337-1399-05
-2	366-1031-09			1	KNOB:	80009	366-1031-09
	213-0246-00			1	. SETSCREW:5-40 X 0.093 INCH L,HEX SOC	71159	OBD
-3	366-1170-03			1	KNOB:GRAY,0.25 ID X 0.706 OD,0.6H	80009	366-1170-03
	213-0153-00			2	. SETSCREW:5-40 X 0.125 INCH,HEX SOC STL	74445	OBD
-4	366-1559-00			6	PUSH BUTTON:GRAY	80009	366-1559-00
-5	366-1690-00			1	KNOB,LATCH:	80009	366-1690-00
-6	----- -----			1	ADAPTER,CONN:(SEE J502 EPL)		
					(ATTACHING PARTS)		
-7	220-0497-00			1	NUT,PLAIN,HEX.:0.5-28 X 0.562 INCH HEX,BRS	73743	OBD
-8	210-1039-00			1	WASHER,LOCK:INT,0.521 ID X 0.625 INCH OD	24931	OBD
					- - - * - - -		
-9	----- -----			1	CONNECTOR,RCPT,:(SEE J5001 EPL)		
-10	210-0255-00			1	TERMINAL,LUG:0.391" ID INT TOOTH	80009	210-0255-00
-11	358-0029-00			1	BSHG,MACH.THD:HEX,0.375-32 X 0.438"LONG	80009	358-0029-00
					(ATTACHING PARTS)		
-12	210-0590-00			1	NUT,PLAIN,HEX.:0.375 X 0.438 INCH,STL	73743	2X28269-402
-13	210-0978-00			1	WASHER,FLAT:0.375 ID X 0.50 INCH OD,STL	78471	OBD
					- - - * - - -		
-14	105-0719-00			1	LATCH,RETAINING:PLUG-IN	80009	105-0719-00
					(ATTACHING PARTS)		
-15	213-0113-00			1	SCR,TPG,THD FOR:2-32 X 0.312 INCH,PNH STL	83385	OBD
					- - - * - - -		
-16	105-0718-00			1	RELEASE,LATCH:	80009	105-0718-00
-17	426-1072-00			6	FRAME,PUSH BTN:PLASTIC	80009	426-1072-00
-18	334-3144-00			1	MARKER,IDENT:MARKED DC508 IGHZ COUNTER	80009	334-3144-00
-19	378-2030-01			1	LENS,LED DSPL:RED,W/MARKINGS	80009	378-2030-01
-20	----- -----			1	CKT BOARD ASSY:DISPLAY(SEE A3 EPL)		
					(ATTACHING PARTS)		
-21	210-0407-00			2	NUT,PLAIN,HEX.:6-32 X 0.25 INCH,BRS	73743	3038-0228-402
					- - - * - - -		
	----- -----			-	. CKT BOARD ASSY INCLUDES:		
-22	131-0608-00			15	. CONTACT,ELEC:0.365 L X 0.25 PH BRZ GOLD PL	22526	47357
-23	136-0252-04			8	. SOCKET,PIN TERM:0.188 INCH LONG	22526	75060
-24	131-1425-00			1	. CONTACT SET,ELE:R ANGLE,0.150" L,STR OF 36	22526	65521-136
-25	333-2365-00			1	PANEL,FRONT:	80009	333-2365-00
-26	200-0935-00			2	BASE,LAMPHOLDER:0.29 OD X 0.19 CASE	80009	200-0935-00
-27	352-0157-00			2	LAMPHOLDER:WHITE PLASTIC	80009	352-0157-00
-28	386-3825-00			1	SUBPANEL,FRONT:	80009	386-3825-00
					(ATTACHING PARTS)		
-29	213-0229-00			2	SCR,TPG,THD FOR:6-20 X0.375"100 DEG,FLH STL	83385	OBD
-30	211-0531-00			2	SCREW,MACHINE:6-32 X 0.375,FIL,STL	83385	OBD
					- - - * - - -		
-31	337-2478-00			1	SHIELD,ELEC:REAR,SUBPANEL	80009	337-2478-00
-32	384-1101-00			1	EXTENSION SHAFT:4.14 INCH LONG	80009	384-1101-00
-33	384-1341-00			1	EXTENSION SHAFT:2.183 INCH LONG,OFFSET	80009	384-1341-00
-34	384-1058-00			1	EXTENSION SHAFT:8.157 INCH LONG	80009	384-1058-00
-35	----- -----			1	CKT BOARD ASSY:RESOLN MULTR(SEE A2 EPL)		
					(ATTACHING PARTS)		
-36	211-0244-00			3	SCR,ASSEM WSHR:4-40 X 0.312 INCH,PNH STL	78189	OBD
					- - - * - - -		
	----- -----			-	. CKT BOARD ASSY INCLUDES:		
-37	131-1426-00			1	. CONTACT SET,ELE:R ANGLE,0.250L,STRIP OF 36	22526	65524-436
-38	136-0269-02			2	. SOCKET,PLUG-IN:14 CONTACT,LOW CLEARANCE	01295	C951401
	136-0269-02 [1]			7	. SOCKET,PLUG-IN:14 CONTACT,LOW CLEARANCE	01295	C951401
-39	136-0260-02			2	. SOCKET,PLUG-IN:16 CONTACT,LOW CLEARANCE	82647	C951601
	198-3795-00 [1]			1	. WIRE SET,ELEC:	80009	198-3795-00
-40	352-0166-07 [1]			1	. . CONN BODY,PL,EL:8 WIRE VIOLET	80009	352-0166-07
-41	352-0168-00 [1]			1	. . CONN BODY,PL,EL:10 WIRE BLACK	80009	352-0168-00
-42	131-0707-00 [1]			18	. . CONNECTOR,TERM.:0.48" L,22-26AWG WIRE	22526	75691-005
-43	175-0828-00 [1]			FT	. . WIRE,ELECTRICAL:5 WIRE RIBBON,1.229 FT	08261	OBD
-44	175-0831-00 [1]			FT	. . WIRE,ELECTRICAL:8 WIRE RIBBON,.792 FT	08261	OBD

[1] Option 7 only.

Fig. & Index No.	Tektronix Part No.	Serial/Model No. Eff	Dscont	Qty	1 2 3 4 5 Name & Description	Mfr Code	Mfr Part Number
1-45	129-0425-00			1	SPACER,POST:0.90 L,W/4-40 THD THRU,AL,0.25 HEX	80009	129-0425-00
					(ATTACHING PARTS)		
-46	211-0101-00			1	SCREW,MACHINE:4-40 X 0.25" 100 DEG,FLH STL	83385	OBD
-47	211-0008-00			1	SCREW,MACHINE:4-40 X 0.25 INCH,PNH STL	83385	OBD
-48	210-1178-00			1	WSHR,SHOULDERED:FOR MTG TO-220 TRANSISTOR	49671	DF 137A
-49	342-0224-00			1	INSULATOR,PLATE:TRANSISTOR	80009	342-0224-00
					- - - * - - -		
-50	----- -----			1	CKT BOARD ASSY:PRE-SCALE(SEE A4 EPL)		
					(ATTACHING PARTS)		
-51	211-0244-00			2	SCR,ASSEM WSHR:4-40 X 0.312 INCH,PNH STL	78189	OBD
-52	211-0538-00			1	SCREW,MACHINE:6-32 X 0.312"100 DEG,FLH STL	83385	OBD
-53	210-0457-00			1	NUT,PLAIN,EXT W:6-32 X 0.312 INCH,STL	83385	OBD
					- - - * - - -		
	----- -----			-	. CKT BOARD ASSY INCLUDES:		
-54	166-0032-00			1	. SPACER,SLEEVE:0.18 ID X 0.313 INCH LONG	80009	166-0032-00
					(ATTACHING PARTS)		
-55	211-0016-00			1	. SCREW,MACHINE:4-40 X 0.625 INCH,PNH STL	83385	OBD
					- - - * - - -		
-56	337-2479-00			1	. SHIELD,ELEC:CIRCUIT BOARD,TOP	80009	337-2479-00
					(ATTACHING PARTS)		
-57	211-0022-00			6	. SCREW,MACHINE:2-56 X 0.188 INCH,PNH STL	83385	OBD
-58	210-0053-00			6	. WASHER,LOCK:INTL,0.092 ID X 0.175"OD,STL	83385	OBD
					- - - * - - -		
-59	211-0012-00			1	. SCREW,MACHINE:4-40 X 0.375 INCH,PNH STL	83385	OBD
-60	361-0225-00			1	. SPACER,SLEEVE:	80009	361-0225-00
-61	211-0097-00			1	. SCREW,MACHINE:4-40 X 0.312 INCH,PNH STL	83385	OBD
-62	129-0517-00			1	. POST,ELEC-MECH:0.25 L X 0.25 HEX,AL	80009	129-0517-00
-63	131-0566-00			1	. LINK,TERM.CONNE:0.086 DIA X 2.375 INCH L	55210	L-2007-1
-64	136-0252-04			23	. SOCKET,PIN TERM:0.188 INCH LONG	22526	75060
-65	131-0938-00			2	. CONNECTOR,RCPT,:50 OHM MALE SNAP-ON	98291	051-043-0349
-66	337-2482-00			1	. SHIELD,ELEC:CIRCUIT BOARD,FRONT	80009	337-2482-00
					(ATTACHING PARTS)		
-67	211-0022-00			5	. SCREW,MACHINE:2-56 X 0.188 INCH,PNH STL	83385	OBD
-68	337-2481-00			1	. SHIELD,ELEC:CIRCUIT BOARD,REAR	80009	337-2481-00
					(ATTACHING PARTS)		
-69	211-0022-00			5	. SCREW,MACHINE:2-56 X 0.188 INCH,PNH STL	83385	OBD
					- - - * - - -		
-70	407-2064-00			1	. BRACKET,ANGLE:ELECTRICAL SHIELD,AL	80009	407-2064-00
-71	129-0463-00			1	. SPACER,POST:0.188 HEX X 0.937"L,W/4-40 THD	80009	129-0463-00
-72	211-0116-00			1	. SCR,ASSEM WSHR:4-40 X 0.312 INCH,PNH BRS	83385	OBD
-73	210-0054-00			1	. WASHER,LOCK:SPLIT,0.118 ID X 0.212"OD STL	83385	OBD
					- - - * - - -		
-74	129-0692-00			1	. SPACER,POST:1.016 L,W/4-40 THRU THD	80009	129-0692-00
					(ATTACHING PARTS)		
-75	211-0007-00			1	. SCREW,MACHINE:4-40 X 0.188 INCH,PNH STL	83385	OBD
-76	210-0054-00			1	. WASHER,LOCK:SPLIT,0.118 ID X 0.212"OD STL	83385	OBD
					- - - * - - -		
-77	337-2480-00			1	. SHIELD,ELEC:CIRCUIT BOARD,BOTTOM	80009	337-2480-00
					(ATTACHING PARTS)		
-78	211-0116-00			1	. SCR,ASSEM WSHR:4-40 X 0.312 INCH,PNH BRS	83385	OBD
					- - - * - - -		
	198-3875-00			1	. WIRE SET,ELEC:	80009	198-3875-00
-79	352-0162-04			1	. . CONN BODY,PL,EL:4 WIRE YELLOW	80009	352-0162-04
-80	131-0707-00			4	. . CONNECTOR,TERM.:0.48" L,22-26AWG WIRE	22526	75691-005
-81	175-0827-00			FT	. . WIRE,ELECTRICAL:4 WIRE RIBBON,.958 FT	08261	OBD
-82	337-2504-00			1	SHIELD,ELEC:INPUT	80009	337-2504-00
	672-0698-00			1	CKT BOARD ASSY:MATRIX ASSY	80009	672-0698-00
					(ATTACHING PARTS)		
-83	213-0146-00			4	SCR,TPG,THD FOR:6-20 X 0.313 INCH,PNH STL	83385	OBD
					- - - * - - -		
	131-0963-00			1	CONTACT,ELEC:GROUNDING	80009	131-0963-00
	----- -----			-	. CKT BOARD ASSY INCLUDES:		
-84	384-0923-00			1	. EXTENSION SHAFT:5.06 INCH LONG	80009	384-0923-00

Fig. & Index No.	Tektronix Part No.	Serial/Model No. Eff	Dscont	Qty	1 2 3 4 5 Name & Description	Mfr Code	Mfr Part Number
1-85	376-0051-00			1	. CPLG,SHAFT,FLEX:FOR 0.125 INCH DIA SHAFTS	80009	376-0051-00
	213-0022-00			4	. . SETSCREW:4-40 X 0.188,STL BLK OXD	74445	OBD
-86	----- -----			1	. RES NONWIR:(SEE R1460 EPL)		
					(ATTACHING PARTS)		
-87	210-0583-00			1	. NUT,PLAIN,HEX.:0.25-32 X 0.312 INCH,BRS	73743	2X20224-402
-88	210-0046-00			1	. WASHER,LOCK:INTL,0.26 ID X 0.40" OD,STL	78189	1214-05-00-0541C
					- - - * - - -		
-89	407-0803-00			1	. BRACKET,CMPNT:	80009	407-0803-00
	----- -----			-	. SW CAM ACTR AS:DISPLAY(SEE S1380 EPL)		
					(ATTACHING PARTS)		
-90	211-0244-00			4	. SCR,ASSEM WSHR:4-40 X 0.312 INCH,PNH STL	78189	OBD
					- - - * - - -		
	----- -----			-	. . SW CAM ACTR ASSY INCLUDES:		
-91	200-2123-00			1	. . COVER,CAM SW:	80009	200-2123-00
					(ATTACHING PARTS)		
-92	211-0008-00			4	. . SCREW,MACHINE:4-40 X 0.25 INCH,PNH STL	83385	OBD
-93	210-0004-00			4	. . WASHER,LOCK:INTL,0.12 ID X 0.26"OD,STL	78189	1204-00-00-0541C
					- - - * - - -		
-94	131-0963-00			1	. . CONTACT,ELEC:GROUNDING	80009	131-0963-00
-95	210-0406-00			4	. . NUT,PLAIN,HEX.:4-40 X 0.188 INCH,BRS	73743	2X12161-402
-96	214-1752-00			2	. . ROLLER,DETENT:	80009	214-1752-00
-97	214-1139-02			1	. . SPRING,FLAT:GREEN COLORED	80009	214-1139-02
	214-1139-03			1	. . SPRING,FLAT:RED COLORED	80009	214-1139-03
-98	401-0180-00			1	. . BEARING,CAM SW:FRONT	80009	401-0180-00
					(ATTACHING PARTS)		
-99	354-0390-00			1	. . RING,RETAINING:0.338 ID X 0.025" THK,STL	79136	5100-37MD
					- - - * - - -		
-100	384-0878-18			1	. . SHAFT CAM SW:OUTER CNCTRC,W/DRVR,TIME/CM	80009	348-0878-18
-101	105-0762-00			1	. . ACTUATOR,CAM SW:DISPLAY	80009	105-0762-00
-102	210-0406-00			2	. . NUT,PLAIN,HEX.:4-40 X 0.188 INCH,BRS	73743	2X12161-402
-103	401-0178-01			1	. . BEARING,CAM SW:CENTER/REAR	80009	401-0178-01
-104	----- -----			-	. CKT BOARD ASSY:MAIN(SEE A1 EPL)		
-105	----- -----			1	. . SWITCH,PUSH:(SEE S1590,S1690,S1790 EPL)		
-106	361-0383-00			4	. . SPACER,PB SW:CHARCOAL,0.33 INCH LONG	80009	361-0383-00
-107	----- -----			1	. . CONN,RCPT,ELEC:(SEE J1770 EPL)		
-108	136-0252-04			5	. . SOCKET,PIN TERM:0.188 INCH LONG	22526	75060
-109	----- -----			1	. . SWITCH,PUSH:(SEE S1570 EPL)		
-110	361-0384-00			2	. . SPACER,PB SW:0.133 INCH LONG	80009	361-0384-00
-111	----- -----			1	. . SWITCH,PUSH:(SEE S1320 EPL)		
-112	131-0608-00			53	. . CONTACT,ELEC:0.365 L X 0.25 PH BRZ GOLD PL	22526	47357
-113	131-0566-00			7	. . LINK,TERM.CONNE:0.086 DIA X 2.375 INCH L	55210	L-2007-1
-114	----- -----			1	. . TRANSISTOR:(SEE U1112 EPL)		
-115	136-0623-00			1	. . SOCKET,PLUG-IN:40 DIP,LOW PROFILE	73803	C954002
-116	136-0269-02			10	. . SOCKET,PLUG-IN:14 CONTACT,LOW CLEARANCE	01295	C951401
-117	136-0514-00			1	. . SOCKET,PLUG IN:MICROCIRCUIT,8 CONTACT	73803	C950802
-118	136-0260-02			10	. . SOCKET,PLUG-IN:16 CONTACT,LOW CLEARANCE	82647	C951601
-119	----- -----			1	. . SWITCH,PUSH:(SEE S1550 EPL)		
-120	361-0383-00			2	. . SPACER,PB SW:CHARCOAL,0.33 INCH LONG	80009	361-0383-00
	131-1426-00			1	. . CONTACT SET,ELE:R ANGLE,0.250L,STRIP OF 36	22526	65524-436
-121	131-0604-00			20	. . CONTACT,ELEC:CKT CD SW,SPR	80009	131-0604-00
-122	131-0993-00			2	. . LINK,TERM.CONNE:2 WIRE BLACK	00779	530153-2
-123	129-0277-00			2	. . SPACER,POST:0.78 L,W/4-40 THD,THRU	80009	129-0277-00
-124	----- -----[1]			1	. . OSCILLATOR,RF:(SEE Y1430 EPL)		
					(ATTACHING PARTS)		
-125	211-0097-00[1]			1	. . SCREW,MACHINE:4-40 X 0.312 INCH,PNH STL	83385	OBD
-126	210-1127-00[1]			1	. . WASHER,FLAT:0.203 ID X 0.048 THK,STL CD	80009	210-1127-00
					- - - * - - -		
-127	----- -----[1]			1	. . MICROCIRCUIT,LI:(SEE U1110 EPL)		
					(ATTACHING PARTS)		
-128	211-0507-00[1]			1	. . SCREW,MACHINE:6-32 X 0.312,PNH STL	83385	OBD
-129	210-0407-00[1]			1	. . NUT,PLAIN,HEX:6-32 X 0.25,BRS,CD PL	73743	3038-0228-402
					- - - * - - -		
	198-3794-00			1	. . WIRE SET,ELEC:	80009	198-3794-00

[1]Options 1 & 7.

Fig. & Index No.	Tektronix Part No.	Serial/Model No. Eff	Dscont	Qty	1 2 3 4 5 Name & Description	Mfr Code	Mfr Part Number
1-130	352-0169-01			2	. . . CONN BODY,PL,EL:2 WIRE BROWN	80009	352-0169-01
	352-0169-02			2	. . . CONN BODY,PL,EL:2 WIRE RED	80009	352-0169-00
	352-0169-03			2	. . . CONN BODY,PL,EL:2 WIRE ORANGE	80009	352-0169-03
-131	131-0707-00			12	. . . CONNECTOR,TERM.:0.48" L,22-26AWG WIRE	22526	75691-005
	198-3795-00			1	. . WIRE SET,ELEC:	80009	198-3795-00
	352-0166-07			1	. . . CONN BODY,PL,EL:8 WIRE VIOLET	80009	352-0166-07
	352-0168-00			1	. . . CONN BODY,PL,EL:10 WIRE BLACK	80009	352-0168-00
	131-0707-00			18	. . . CONNECTOR,TERM:0.48" L,22-26 AWG WIRE	22526	75691-005
	175-0828-00			FT	. . . WIRE,ELECTRICAL:5 WIRE RIBBON,1.229 FT	08261	OBD
	175-0831-00			FT	. . . WIRE,ELECTRICAL:8 WIRE RIBBON,.792 FT	08261	OBD
-132	214-1061-00			1	SPRING,GROUND:FLAT	80009	214-1061-00
-133	426-0725-19			1	FR SECT,PLUG-IN:TOP	80009	426-0725-19
-134	426-0724-04			1	FR SECT,PLUG-IN:BOTTOM	80009	426-0724-04
	198-3793-00			1	WIRE SET,ELEC:	80009	198-3793-00
-135	175-0825-00			FT	. WIRE,ELECTRICAL:2 WIRE RIBBON,.750 FT	08261	OBD
-136	175-0828-00			FT	. WIRE,ELECTRICAL:5 WIRE RIBBON,.625 FT	08261	OBD
-137	175-0830-00			FT	. WIRE,ELECTRICAL:7 WIRE RIBBON,.896 FT	08261	OBD
-138	175-0833-00			FT	. WIRE,ELECTRICAL:10 WIRE RIBBON,.521 FT	08261	OBD
-139	352-0169-02			1	. CONN BODY,PL,EL:2 WIRE RED	80009	352-0169-00
	352-0169-03			1	. CONN BODY,PL,EL:2 WIRE ORANGE	80009	352-0169-03
-140	352-0163-05			4	. CONN BODY,PL,EL:5 WIRE GREEN	80009	352-0163-05
-141	352-0165-07			2	. CONN BODY,PL,EL:7 WIRE VIOLET	80009	352-0165-07
-142	352-0168-00			2	. CONN BODY,PL,EL:10 WIRE BLACK	80009	352-0168-00
-143	131-0707-00			62	. CONNECTOR,TERM.:0.48" L,22-26AWG WIRE	22526	75691-005
-144	210-0774-00			1	. EYELET,METALLIC:0.152 OD X 0.245 INCH L,BRS	80009	210-0774-00
-145	210-0775-00			1	. EYELET,METALLIC:0.126 OD X 0.23 INCH L,BRS	80009	210-0775-00
-146	131-0375-00			3	. CONNECTOR,PLUG,:RIGHT ANGLE	98291	051-028-0079-220

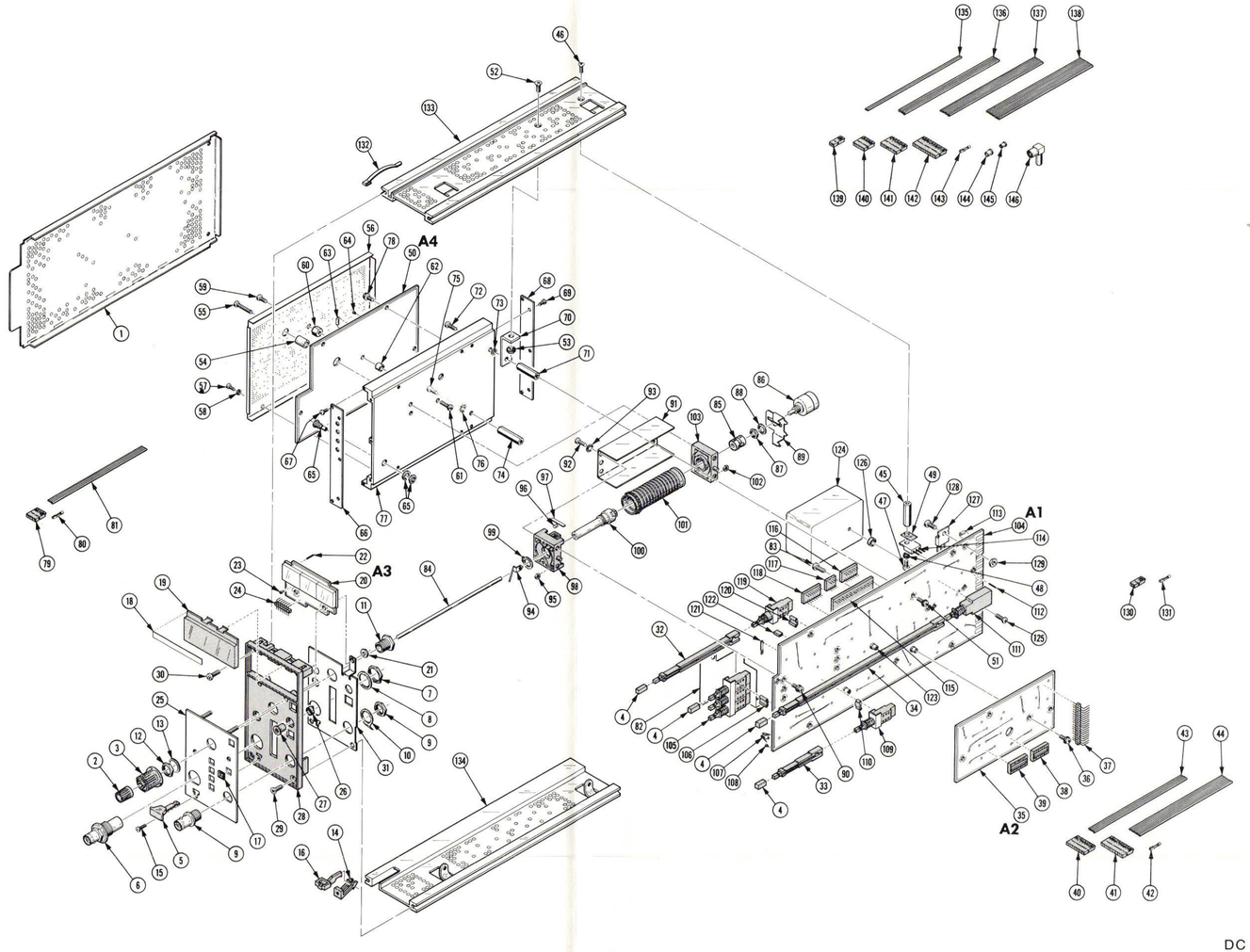

ACCESSORIES

Fig. & Index No.	Tektronix Part No.	Serial/Model No. Eff	Dscont	Qty	1 2 3 4 5	Name & Description	Mfr Code	Mfr Part Number
	070-2460-00			1		MANUAL,TECH:INSTRUCTION	80009	070-2460-00

MANUAL CHANGE INFORMATION

At Tektronix, we continually strive to keep up with latest electronic developments by adding circuit and component improvements to our instruments as soon as they are developed and tested.

Sometimes, due to printing and shipping requirements, we can't get these changes immediately into printed manuals. Hence, your manual may contain new change information on following pages.

A single change may affect several sections. Since the change information sheets are carried in the manual until all changes are permanently entered, some duplication may occur. If no such change pages appear following this page, your manual is correct as printed.

SERVICE NOTE

Because of the universal parts procurement problem, some electrical parts in your instrument may be different from those described in the Replaceable Electrical Parts List. The parts used will in no way alter or compromise the performance or reliability of this instrument. They are installed when necessary to ensure prompt delivery to the customer. Order replacement parts from the Replaceable Electrical Parts List.

CALIBRATION TEST EQUIPMENT REPLACEMENT

Calibration Test Equipment Chart

This chart compares TM 500 product performance to that of older Tektronix equipment. Only those characteristics where significant specification differences occur, are listed. In some cases the new instrument may not be a total functional replacement. Additional support instrumentation may be needed or a change in calibration procedure may be necessary.

Comparison of Main Characteristics

DM 501 replaces 7D13		
PG 501 replaces 107	PG 501 - Risetime less than 3.5 ns into 50 Ω.	107 - Risetime less than 3.0 ns into 50 Ω.
108	PG 501 - 5 V output pulse; 3.5 ns Risetime.	108 - 10 V output pulse; 1 ns Risetime.
111	PG 501 - Risetime less than 3.5 ns; 8 ns Pretrigger pulse delay.	111 - Risetime 0.5 ns; 30 to 250 ns Pretrigger Pulse delay.
114	PG 501 - ±5 V output.	114 - ±10 V output. Short proof output.
115	PG 501 - Does not have Paired, Burst, Gated, or Delayed pulse mode; ±5 V dc Offset. Has ±5 V output.	115 - Paired, Burst, Gated, and Delayed pulse mode; ±10 V output. Short-proof output.
PG 502 replaces 107		
108	PG 502 - 5 V output	108 - 10 V output.
111	PG 502 - Risetime less than 1 ns; 10 ns Pretrigger pulse delay.	111 - Risetime 0.5 ns; 30 to 250 ns Pretrigger pulse delay.
114	PG 502 - ±5 V output	114 - ±10 V output. Short proof output.
115	PG 502 - Does not have Paired, Burst, Gated, Delayed & Undelayed pulse mode; Has ±5 V output.	115 - Paired, Burst, Gated, Delayed & Undelayed pulse mode; ±10 V output. Short-proof output.
2101	PG 502 - Does not have Paired or Delayed pulse. Has ±5 V output.	2101 - Paired and Delayed pulse; 10 V output.
PG 506 replaces 106	PG 506 - Positive-going trigger output signal at least 1 V; High Amplitude output, 60 V.	106 - Positive and Negative-going trigger output signal, 50 ns and 1 V; High Amplitude output, 100 V.
067-0502-01	PG 506 - Does not have chopped feature.	0502-01 - Comparator output can be alternately chopped to a reference voltage.
SG 503 replaces 190, 190A, 190B	SG 503 - Amplitude range 5 mV to 5.5 V p-p.	190B - Amplitude range 40 mV to 10 V p-p.
191	SG 503 - Frequency range 250 kHz to 250 MHz.	191 - Frequency range 350 kHz to 100 MHz.
067-0532-01	SG 503 - Frequency range 250 kHz to 250 MHz.	0532-01 - Frequency range 65 MHz to 500 MHz.
TG 501 replaces 180, 180A	TG 501 - Marker outputs, 5 sec to 1 ns. Sinewave available at 5, 2, and 1 ns. Trigger output - slaved to marker output from 5 sec through 100 ns. One time-mark can be generated at a time.	180A - Marker outputs, 5 sec to 1 μs. Sinewave available at 20, 10, and 2 ns. Trigger pulses 1, 10, 100 Hz; 1, 10, and 100 kHz. Multiple time-marks can be generated simultaneously.
181	TG 501 - Marker outputs, 5 sec to 1 ns. Sinewave available at 5, 2, and 1 ns.	181 - Marker outputs, 1, 10, 100, 1000, and 10,000 μs, plus 10 ns sinewave.
184	TG 501 - Marker outputs, 5 sec to 1 ns. Sinewave available at 5, 2, and 1 ns. Trigger output - slaved to marker output from 5 sec through 100 ns. One time-mark can be generated at a time.	184 - Marker outputs, 5 sec to 2 ns. Sinewave available at 50, 20, 10, 5, and 2 ns. Separate trigger pulses of 1 and .1 sec; 10, 1, and .1 ms; 10 and 1 μs. Marker amplifier provides positive or negative time marks of 25 V min. Marker intervals of 1 and .1 sec; 10, 1, and .1 ms; 10 and 1 μs.
2901	TG 501 - Marker outputs, 5 sec to 1 ns. Sinewave available at 5, 2, and 1 ns. Trigger output - slaved to marker output from 5 sec through 100 ns. One time-mark can be generated at a time.	2901 - Marker outputs, 5 sec to 0.1 μs. Sinewave available to 50, 10, and 5 ns. Separate trigger pulses, from 5 sec to 0.1 μs. Multiple time-marks can be generated simultaneously.

NOTE: All TM 500 generator outputs are short-proof. All TM 500 plug-in instruments require TM 500-Series Power Module.

MANUAL CHANGE INFORMATION

TEKTRONIX®
committed to technical excellence

PRODUCT DC 508	CHANGE REFERENCE C1/478
070-2460-00	DATE 4-10-78

CHANGE:	DESCRIPTION

EFF ALL SN

Pilot Changes #2 & #3

ELECTRICAL PARTS LIST AND SCHEMATIC CHANGES

ADD:

C1558	281-0775-00	CAP.,FXD,CER DI:0.1UF,20%,50V

MECHANICAL PARTS LIST CHANGES

ADD:

175-0250-00	3.5"	CABLE,SP,ELEC,4,28 AWG,SHIELDED
162-0531-00	2	INSUL,SLVG,ELEC,HEAT SHRINK,0.188 ID,5/8"
210-0054-00	2	WASHER,LOCK,#4 SPLIT,0.025
211-0008-00	2	SCREW,MACHINE,4-40 X 0.188 STL,CD,PL,POZ

DIAGRAM 4 COUNT PROCESSING & DECADE COUNTERS - Partial

DIAGRAM 5 DISPLAY DRIVERS & DISPLAYS - Partial

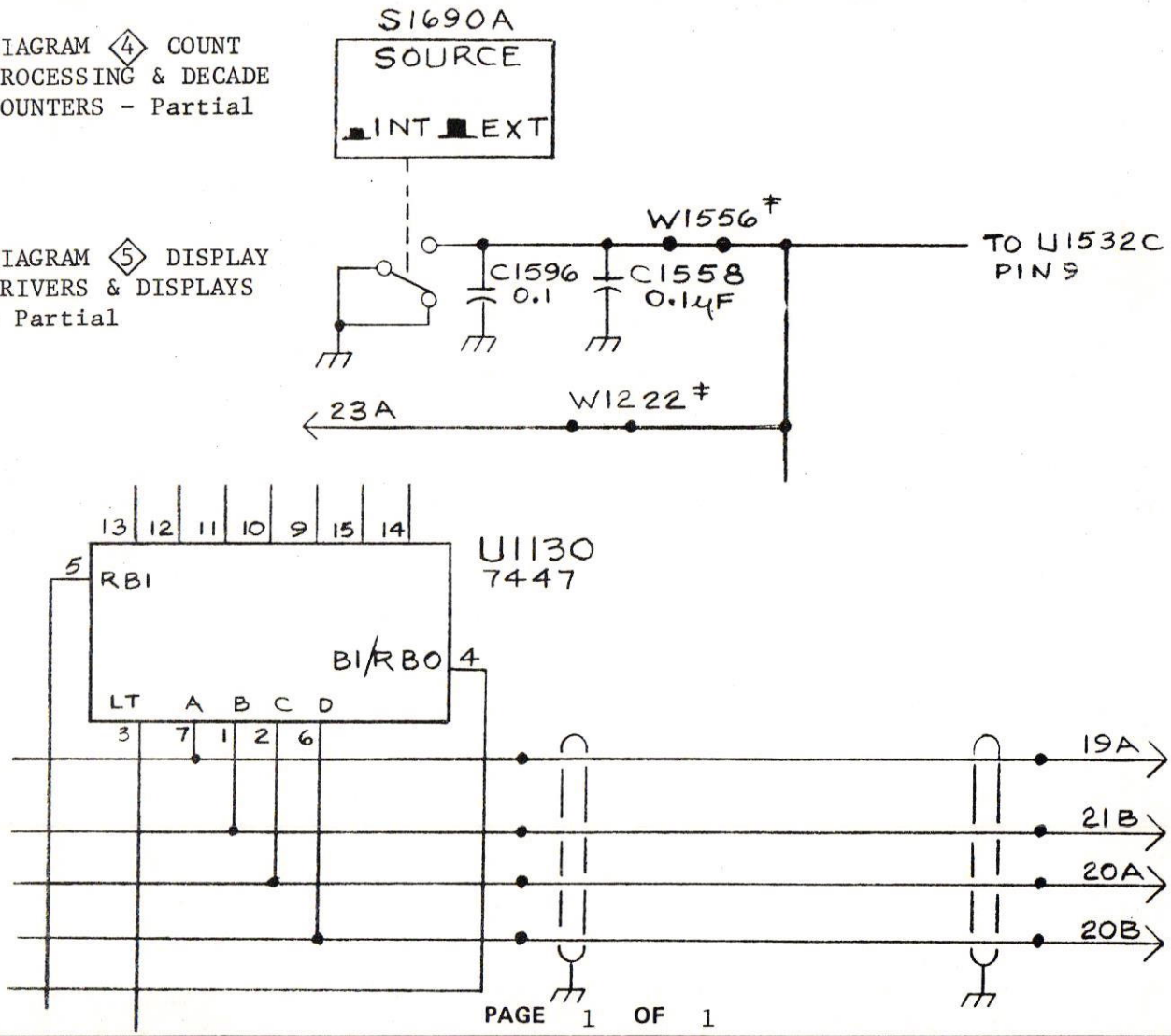

MANUAL CHANGE INFORMATION

TEKTRONIX®
committed to technical excellence

PRODUCT DC 508
070-2460-00

CHANGE REFERENCE C2/478
DATE 4-26-78

CHANGE:	DESCRIPTION

EFF SN B010100 Pilot Change #4

ELECTRICAL PARTS LIST AND SCHEMATIC CHANGES

ADD:

C2258	283-0252-00	CAP.,FXD,CER DI:1000PF,10%,50V
C2264	283-0252-00	CAP.,FXD,CER DI:1000PF,10%,50V
CR2262	152-0524-00	SEMICOND DEVICE:100V,100MA
L2263	108-0509-00	COIL,RF:2.5UH
Q2321	151-0188-00	TRANSISTOR:SILICON,PNP,2N3906
R2252	315-0331-00	RES.,FXD,CMPSN: 330 OHM,5%,0.25W
R2325	315-0104-00	RES.,FXD,CMPSN:100K OHM,5%,0.25W

DIAGRAM 2 PRESCALER - Partial

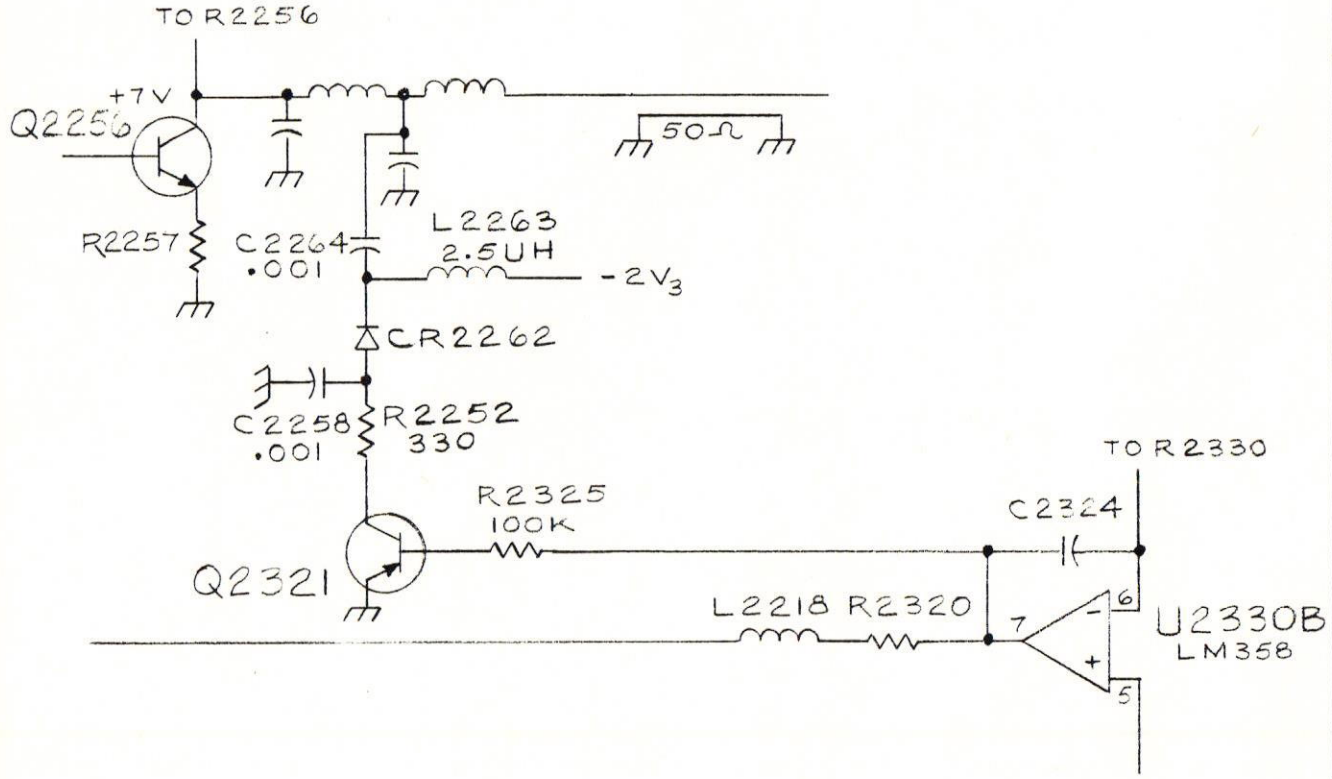

TEKTRONIX®
committed to technical excellence

MANUAL CHANGE INFORMATION

PRODUCT DC 508
070-2460-00

CHANGE REFERENCE C3/478
DATE 4-26-78

CHANGE:	DESCRIPTION

ELECTRICAL PARTS LIST CORRECTIONS

CHANGE TO:

C2110 C2121 C2131 C2141 C2151 C2160 C2246 C2322 C2344 C2350 C2352 C2354 C2356 C2360 C2430 C2460 C2464	283-0324-00	CAP.,FXD,CER DI:0.01UF,+80-20%,50V

TEXT CORRECTIONS

Page 1-5, left column, first paragraph, last line;
CHANGE: 20 pF to 25 pF

Page 1-5, left column, third paragraph, fourth line:
CHANGE: the words "caused by" to "causing"

Page 2-2, right column, fourth row
CHANGE TO READ: 50 Ω ±10% paralled by ≈ 25 pF

Page 2-2, left column, tenth row:
CHANGE TO READ: Impedance (dc coupled)

Page 3-1, Table 3-1, second column, first row, second line;
CHANGE TO READ: MHz to 1GHz, 20 mV.

Page 3-1, Table 3-1, second column, second row;
CHANGE TO READ: 1MHz with 1×10^{-7} accuracy (10^{-9} accuracy required for optional time base).

Page 3-1, Table 3-1, first column, fifth row;
CHANGE TO READ: Bnc female to GR connector

Page 3-3, right column, following Step 7a
ADD: b. Set the RESOLUTION control to 0.1 Hz DIRECT.
RELABEL: the existing steps b and c to read c and d respectively.

CHANGE:	DESCRIPTION

Page 4-2, Table 4-1, right column, eighth row;

CHANGE: 011-0049-01 to 011-0060-02

Page 4-2, Table 4-1;

ADD: The following row to the bottom of the table:

Bnc male to GR connector	50 Ω	Prescale threshold adjust	Tektronix Part Number 017-0064-00

Page 6-1, right column, first paragraph, sixth line;

CHANGE: 35 MHz to 3.5 MHz

Page 6-2, left column, third paragraph, last line;

CHANGE: U2350A to U2350.

Page 6-2, left column, last paragraph, first line;

CHANGE: CR2460 to read CR2462.

Page 6-2, left column, last paragraph, third line;

CHANGE TO READ: enough signal exists to drive U2350 properly. A high

Page 6-2, right column, top of page. Insert the following text under Prescaler, between end of first paragraph and beginning of second paragraph.

The automatic gain control circuit consisting of Q2321, CR2262, C2264, and related components prevent overdriving U2350 when large amplitude signals above 75 mHz are applied to the input.

Page 6-2, right column, second paragraph, first and fifth lines;

CHANGE TO READ: The input to U2350 is matched to about 50 Ω by R2360.... U2350. The output of U2345, which equals the input.....