Tektronix®
COMMITTED TO EXCELLENCE

WARNING

THE FOLLOWING SERVICING INSTRUCTIONS ARE FOR USE BY QUALIFIED PERSONNEL ONLY. TO AVOID PERSONAL INJURY, DO NOT PERFORM ANY SERVICING OTHER THAN THAT CONTAINED IN OPERATING INSTRUCTIONS UNLESS YOU ARE QUALIFIED TO DO SO.

PLEASE CHECK FOR CHANGE INFORMATION AT THE REAR OF THIS MANUAL.

851 DIGITAL TESTER SERVICE

INSTRUCTION MANUAL

Tektronix, Inc.
P.O. Box 500
Beaverton, Oregon 97077

070-2192-01
Product Group 35

Serial Number _____

First Printing OCT 1977
Revised FEB 1982

EBAMAN.COM

preserving our technical legacy

This manual is provided FREE OF CHARGE from EBAMAN.COM as a service to the technical community.

It was uploaded by someone who wanted to help you repair and maintain your equipment.

If you paid for this manual, you paid someone who is making a profit from the free labor of others without asking their permission.

Thousands of files are available without charge from:
EBAMAN.COM

Visit up at http://ebaman.com

This file was provided by:
Jerry Ingordo W2JI

Copyright © 1977, 1978 Tektronix, Inc. All rights reserved. Contents of this publication may not be reproduced in any form without the written permission of Tektronix, Inc.

Products of Tektronix, Inc. and its subsidiaries are covered by U.S. and foreign patents and/or pending patents.

TEKTRONIX, TEK, SCOPE-MOBILE, and are registered trademarks of Tektronix, Inc. TELEQUIPMENT is a registered trademark of Tektronix U.K. Limited.

Printed in U.S.A. Specification and price change privileges are reserved.

TABLE OF CONTENTS

		Page
	List of Illustrations	vi
	List of Tables	ix
	Safety Summary	xi
SECTION 1	**GENERAL INFORMATION**	
	INTRODUCTION	1-1
	STANDARD ACCESSORIES	1-1
	OPTIONAL ACCESSORIES	1-1
	SPECIFICATION	1-2
	ELECTRICAL	1-2
	ENVIRONMENTAL	1-9
	MECHANICAL	1-9
SECTION 2	**OPERATING INSTRUCTIONS**	
	OPERATING VOLTAGE	2-1
	PROBES	2-1
	PROBING TECHNIQUES	2-1
	OPERATOR CHECKS AND ADJUSTMENTS	2-1
	EXTERNAL CONTROLS, CONNECTORS AND INDICATORS	2-3
	POWER CONTROLS	2-3
	SELF TEST	2-3
	INPUT CONTROLS	2-3
	READOUT	2-4
	DISPLAY AND RANGE CONTROLS	2-4
SECTION 3	**PERFORMANCE CHECK**	
	INTRODUCTION	3-1
	LIMITS AND TOLERANCES	3-1
	EQUIPMENT REQUIRED	3-1
	INDEX TO PERFORMANCE CHECK (SHORT FORM PROCEDURE)	3-4
	PERFORMANCE CHECK PROCEDURE (PART ONE)	3-4
	PERFORMANCE CHECK PROCEDURE (PART TWO)	3-19

TABLE OF CONTENTS (cont)

		Page
SECTION 4	**ADJUSTMENTS**	
	INTRODUCTION	4-1
	PURPOSE	4-1
	ADJUSTMENT INTERVAL	4-1
	LIMITS AND TOLERANCES	4-1
	ADJUSTMENT LOCATIONS AND TEST POINTS	4-1
	TEST EQUIPMENT REQUIRED	4-1
	CABINET REMOVAL	4-1
	THRESHOLD SETTING	4-1
	PRELIMINARY PROCEDURE	4-1
	INDEX TO PROCEDURE (SHORT FORM PROCEDURE)	4-3
	ADJUSTMENT PROCEDURE	4-4
SECTION 5	**MAINTENANCE**	
	CABINET SEPARATION	5-1
	CHANGING POWER CORD PLUG TYPE	5-1
	CIRCUIT BOARD IDENTIFICATION	5-1
	MAINTENANCE PRECAUTIONS	5-1
	PREVENTIVE MAINTENANCE	5-4
	CLEANING	5-4
	VISUAL INSPECTION	5-5
	SEMICONDUCTOR CHECKS	5-5
	RECALIBRATION	5-5
	DD501 MODIFICATION (FOR PERFORMANCE CHECK)	5-5
	TROUBLESHOOTING	5-8
	RECOMMENDED TEST EQUIPMENT	5-8
	TROUBLESHOOTING CHART	5-8
	CHECKING INDIVIDUAL COMPONENTS	5-8
	CIRCUIT TROUBLESHOOTING NOTES	5-11
	CORRECTIVE MAINTENANCE	5-12
	OBTAINING REPLACEMENT PARTS	5-12
	DISASSEMBLY INSTRUCTIONS	5-12
	Front Cabinet Half Removal	5-12
	Power Supply—Front Circuit Board Assembly Separation	5-12
	Comparator Board Removal	5-13
	DMM Board Removal	5-13
	IO Board—Counter Board Separation	5-14
	Power Supply Board Removal	5-15
	FUNCTION Switch	5-15
	MAINTENANCE AIDS	5-20

TABLE OF CONTENTS (cont)

SECTION 6	THEORY OF OPERATION	Page
	LOGIC SYMBOLS	6-1
	OVERALL OPERATION OF EACH FUNCTION	6-2
	PEAK	6-2
	PERCENT DUTY FACTOR	6-2
	FREQ	6-2
	PERIOD	6-2
	WIDTH	6-2
	TRNSN TIME	6-2
	TOTALIZE	6-3
	FREQ RATIO	6-3
	A COUNT (B→C)	6-3
	A TRNSN (B→C)	6-3
	TIME (B→C)	6-3
	TIME (B·C)	6-3
	THRESHOLD FUNCTIONS	6-3
	LINE	6-3
	OVERALL BLOCK DIAGRAM	6-4
	DIGITAL MULTIMETER (DMM)	6-6
	DMM BLOCK DIAGRAM DISCUSSION	6-6
	OHMS CONVERTER	6-8
	Reference Current Source	6-8
	Measurement Current Source	6-9
	OHMS Protection	6-9
	AC TO DC CONVERTER	6-10
	TEMPERATURE CONVERTER	6-11
	ANALOG TO DIGITAL CONVERTER	6-12
	Low Pass Filter	6-12
	Integrator and Comparator	6-13
	Polarity Flip Flop	6-15
	Zero Crossing Logic	6-16
	State Counter	6-17
	DMM Overrange Logic	6-17
	State Switching Logic	6-18
	DMM Latch Strobe Logic	6-20
	DMM Clock Logic	6-20
	DMM RANGE DECODE	6-23
	ATTENUATOR	6-23
	COUNTER INPUT	6-24
	INPUT COMPARATOR CELL	6-25
	Input Amplifier and Comparator	6-25
	Schmitt Trigger	6-25

TABLE OF CONTENTS (cont)

SECTION 6	THEORY OF OPERATION (cont)	Page
	INPUT FILTER	6-26
	Current Sources	6-26
	Individual Filter Cells	6-27
	Overall Channel B Input Filter Operation	6-28
	Overall Channel A Input Filter Operation	6-29
	SLOPE SWITCHES	6-30
	DELAY LINE	6-30
	LOGIC LIGHTS	6-30
	Logic Light Cell	6-30
	A Interrogation Control	6-31
	B and C Interrogation Control	6-33
	A Logic Lights Overall Operation	6-33
	B and C Logic Lights Overall Operation	6-33
	DUTY FACTOR CONVERTER	6-34
	PEAK DETECTOR AND A COMPARISON VOLTAGE CONTROL	6-35
	+Peak Detector	6-36
	−Peak Detector	6-36
	A Comparison Voltage Control	6-38
	TRANSITION TIME START-STOP	6-41
	COUNTER	6-42
	A SIGNAL TRANSITIONS SENSE LOGIC	6-43
	COUNTER SOURCE SELECTION LOGIC	6-44
	TIME AND FREQUENCY AUTORANGE DECODE	6-46
	DECADE COUNTERS	6-46
	STORAGE REGISTERS	6-47
	COUNTER GATE LOGIC	6-48
	Normal Operation	6-48
	Overrange Operation	6-48
	Totalize Operation	6-48
	COUNTER GATE RESET AND HOLDOFF LOGIC	6-50
	LATCH STROBE LOGIC	6-52
	DMM Latching	6-52
	Non-DMM Latching	6-52
	COUNTER RESET LOGIC	6-54
	COUNTER OVERRANGE LOGIC	6-56
	COUNTER OVERRANGE BLANKING LOGIC	6-56
	Overrange Operation	6-56
	Underrange Operation	6-56
	COUNTER UNDERRANGE LOGIC	6-58
	Non-Underrange Operation	6-58
	Underrange Operation	6-59
	DMM UNDERRANGE LOGIC	6-59
	Non-Underrange Operation	6-59
	Underrange Operation	6-59

TABLE OF CONTENTS (cont)

		Page
SECTION 6	THEORY OF OPERATION (cont)	
	DISPLAY	6-60
	SIGN ENABLE LOGIC	6-60
	POLARITY INDICATION	6-62
	RANGE INDICATION LOGIC	6-62
	DECIMAL POINT LOGIC	6-62
	LEADING ZERO SUPPRESSION LOGIC	6-64
	BCD TO SEVEN-SEGMENT DECODER DRIVER	6-64
	SEVEN SEGMENT DISPLAYS	6-65
	DIGIT SELECT LOGIC	6-65
	AUTORANGE LOGIC	6-66
	AUTORANGE BLOCK DIAGRAM DESCRIPTION	6-66
	RANGE COUNTER	6-66
	RANGE CHANGE INITIATION LOGIC	6-68
	Change Due To An Overrange Condition	6-68
	Change Due To An Underrange Condition or Manual Downranging	6-69
	UPRANGE-DOWNRANGE SELECT LOGIC	6-69
	MINIMUM RANGE LOGIC	6-70
	MAXIMUM RANGE LOGIC	6-70
	MANUAL MINIMUM TO MAXIMUM RANGE STEP LOGIC	6-71
	ILLEGAL STATES LOGIC	6-71
	MASTER CLOCK AND CALIBRATOR	6-72
	MASTER CLOCK	6-72
	CALIBRATOR	6-72
	5 kHz Gate	6-72
	Clamping Circuit	6-72
	POWER SUPPLY	6-73
	PRIMARY CIRCUIT	6-73
	SUPPLY REGULATORS	6-74
	OVERCURRENT PROTECTION	6-75
	Current Limit	6-75
	Current Foldover	6-75
	HIGH-EFFICIENCY +5 VOLT SUPPLY	6-76
	Regulation	6-76
	Current Limit	6-77
	SUPPLY REFERENCES	6-77
SECTION 7	OPTIONS	7-1
SECTION 8	REPLACEABLE ELECTRICAL PARTS	
SECTION 9	DIAGRAMS AND CIRCUIT BOARD ILLUSTRATIONS	
SECTION 10	REPLACEABLE MECHANICAL PARTS	
CHANGE INFORMATION		

LIST OF ILLUSTRATIONS

Figure No.		Page
Frontis	851 Digital Tester	x
1-1	851 dimensional drawing	1-10
2-1	851 Digital Tester external controls, connectors, and indicators	2-3
3-1	Sealed portion of optional temperature probe	3-9
3-2	Temperature equalizing block	3-9
3-3	Test equipment and setup for INPUT FILTER check	3-12
3-4	Pulse generator output for INPUT FILTER check	3-13
3-5	Test equipment and setup for % DUTY FACTOR check	3-15
3-6	Test equipment setup for high-frequency sinewave PEAK accuracy check	3-16
3-7	Test equipment setup for + and − PEAK check (40 Hz)	3-17
3-8	Test setup for 851 timing checks	3-21
3-9	Test equipment setup for CHANNEL A 14 ns sensitivity check	3-25
3-10	Test setup for CHANNEL B and C 14 ns sensitivity check	3-27
4-1	Sealed portion of temperature probe	4-6
4-2	Test equipment setup for Input Compensation Adjustment	4-8
4-3	Test equipment setup for INPUT FILTER adjustments	4-11
4-4	INPUT FILTER adjustment waveforms	4-12
4-5	Test equipment setup for DUTY FACTOR adjustments	4-13
4-6	Test equipment setup for CHANNEL B and C delay equalization	4-14
4-7	Comparator board delay line taps for equalizing the delay between CHANNEL B and CHANNEL C	4-15
5-1	851 cabinet separation	5-3
5-2	851 circuit board identification	5-4
5-3	DD501 modification for Performance Check Part 2	5-6
5-4	Setup for checking modified DD501 output (idealized waveform)	5-7
5-5	Semiconductor lead configuration	5-9
5-6	Color codes	5-10
5-7	Front cabinet half removal	5-13
5-8	Comparator board removal	5-14
5-9	DMM Board removal	5-14
5-10	Power Supply board removal	5-15
5-11	FUNCTION switch lubrication	5-16
5-12	FUNCTION switch contact height	5-16
5-13	FUNCTION switch subassembly—part 1	5-17
5-14	FUNCTION switch subassembly—part 2	5-18
5-15	FUNCTION switch subassembly—part 3	5-19

LIST OF ILLUSTRATIONS (cont)

Figure No.		Page
6-1	Logic symbols	6-1
6-2	Basic block diagram of the 851	6-4
6-3	Simplified block diagram of the DMM portion of the 851	6-6
6-4	Simplified diagram of the Ohms Converter	6-8
6-5	Simplified diagram of the Ohms Protection circuit	6-9
6-6	Simplified diagram of the Ac to Dc Converter	6-10
6-7	Simplified diagram of the Temperature Converter	6-11
6-8	Timing diagram of the signals generated in the Analog to Digital Converter	6-12
6-9	Diagram of the Low-Pass Filter	6-13
6-10A	Simplified diagram of the Integrator and Comparator in the auto zero interval	6-13
6-10B	Simplified diagram of the Integrator and Comparator in the signal integrate interval	6-14
6-10C	Simplified diagram of the Integrator and Comparator in the reference integrate interval	6-15
6-11	Simplified diagram of the Zero Crossing Logic	6-16
6-12	Simplified diagram of the State Counter with a timing diagram	6-17
6-13	Simplified diagram of the DMM Overrange Logic with a timing diagram	6-18
6-14	Simplified diagram of the State Switching Logic with a timing diagram	6-19
6-15	DMM Latch Strobe Logic with a timing diagram	6-20
6-16	Simplified diagram of the DMM Clock Logic with a timing diagram	6-21
6-17	Simplified diagrams of the DMM Range Decode circuit	6-22
6-18	Simplified diagram of the Counter Input Circuitry	6-24
6-19	Simplified diagram of an Input Comparator Cell	6-25
6-20	Input Filter Current Source	6-26
6-21	Channel B negative edge Input Filter Cell	6-27
6-22	Overall block diagram of the Channel B Input Filter	6-28
6-23	Overall block diagram of the Channel A Input Filter	6-29
6-24	Simplified diagram of the A HI Logic Light Cell	6-30
6-25	Simplified diagram of the A Interrogation Control circuit	6-31
6-26	Simplified diagram of the B Interrogation Control circuit	6-32
6-27	Overall relationship of the individual circuits in the A Logic Lights circuit	6-32
6-28	Overall relationship of the individual circuits in the B Logic Lights circuit	6-33
6-29	Simplified diagram of the Duty Factor Converter	6-34
6-30	Block diagram of the Peak Detectors and the A Comparison Voltage Control circuits	6-35
6-31	Simplified diagram of the + Peak Detector and the A HI Comparator Cell	6-37
6-32	Simplified diagram of the A Comparison Voltage Control circuit	6-38
6-33	Simplified diagram of the Transition Start-Stop circuit with a timing diagram	6-40
6-34	Block diagram of the Counter	6-42
6-35	Simplified diagram of the A Transitions Sense Logic with a timing diagram	6-43
6-36	Counter Source Selection Logic	6-45
6-37	Simplified diagram of the Counter Gate Logic with a timing diagram	6-49
6-38	Counter Gate Reset and Holdoff Logic	6-51
6-39	Simplified diagram of the Latch Strobe Logic	6-53
6-40	Counter Reset Logic with a timing diagram	6-55
6-41	Counter Overrange Logic and Counter Overrange Blanking Logic	6-57
6-42	Counter Underrange Logic with a timing diagram	6-58
6-43	DMM Underrange Logic	6-59
6-44	Block diagram of the Display circuit	6-61
6-45	Simplified diagram of the Sign Enable Logic	6-61
6-46	Diagram of the Polarity Indication Logic with a truth table	6-62
6-47	Block diagram of the Autoranging Logic	6-67
6-48	Range Change Initiation Logic	6-68

LIST OF ILLUSTRATIONS (cont)

Figure No.		Page
6-49	Uprange — Downrange Select Logic	6-69
6-50	Minimum Range Logic	6-70
6-51	Diagram of a positive voltage power supply regulator	6-74
6-52	Diagram of a positive voltage supply with current limiting	6-74
6-53	Diagram of the −5 Volt Supply Overcurrent protection circuit	6-75
6-54	Simplified diagram of the High-Effeciency +5 Volt Supply	6-76
9-1	Semiconductor lead configuration.	
9-2	Troubleshooting tree—part 1.	
9-3	Adjustment locations.	
9-4	Troubleshooting tree—part 2.	
9-5	A1 - IO board component locations.	
9-6	A7 - DMM board component locations.	
9-7	A11 - Switch #1 component locations.	
9-8	A12 - Switch #2 component locations.	
9-9	A4 - Comparator board component locations.	
9-10	A9 - Counter board component locations.	
9-11	A8 - Edge Trigger board component locations.	
9-12	A16 - Power Supply board component locations.	
10-1	Front Panel and Input Output exploded view.	
10-2	Circuit boards exploded view.	
10-3	Accessories.	

LIST OF TABLES

Table No.		Page
1-1	Electrical Specification	1-2
1-2	Environmental Specification	1-9
1-3	Mechanical Specification	1-9
2-1	Self Test Checkout	2-2
2-2	Decimal Points And Range Indicators	2-5
2-3	Function Switch Description	2-6
3-1	Test Equipment Required	3-1
3-2	DCV Accuracy	3-5
3-3	ACV Accuracy	3-5
3-4	DC Normal-Mode Rejection	3-6
3-5	Check DC Zero	3-6
3-6	Check AC Zero	3-7
3-7	AC Common-Mode Rejection	3-7
3-8	DC Common-Mode Rejection	3-8
3-9	Ω Accuracy	3-8
3-10	Logic State Indications	3-12
3-11	+ And − (minus) PEAK (High Frequencies)	3-16
3-12	+ And − (minus) PEAK (Low Frequencies)	3-16
3-13	+ And − (minus) PEAK (DC)	3-17
3-14	+ And − (minus) PEAK (40 Hz) Check	3-18
3-15	Calibrator Check	3-19
3-16	Freq Check	3-20
3-17	Period Accuracy	3-20
3-18	Width Check	3-22
3-19	Freq Ratio A/C Accuracy Check	3-23
3-20	A Count (B→C) Check	3-23
3-21	A Trnsn (B→C) Check	3-23
3-22	Time (B→C) Check	3-24
3-23	Time (B·C) Check	3-24
4-1	Test Equipment Required	4-2
4-2	Power Supply Tolerances	4-4
6-1	Counter Source Selection Logic Operation	6-44
6-2	Time and Frequency Range Decode	6-46
6-3	Decimal Points and Range Lights Displayed For All Combinations of 851 Functions and Ranges	6-63

OPERATORS SAFETY SUMMARY

The general safety information in this part of the summary is for both operating and servicing personnel. Specific warnings and cautions will be found throughout the manual where they apply, but may not appear in this summary.

TERMS

In This Manual

CAUTION statements identify conditions or practices that could result in damage to the equipment or other property.

WARNING statements identify conditions or practices that could result in personal injury or loss of life.

As Marked on Equipment

CAUTION indicates a personal injury hazard not immediately accessible as one reads the marking, or a hazard to property including the equipment itself.

DANGER indicates a personal injury hazard immediately accessible as one reads the marking.

SYMBOLS

In This Manual

⚠ This symbol indicates where applicable cautionary or other information is to be found.

As Marked on Equipment

ϟ DANGER — High voltage.

⏚ Protective ground (earth) terminal.

⚠ ATTENTION — refer to manual.

Grounding the Product

This product is grounded through the grounding conductor of the power cord. To avoid electrical shock, plug the power cord into a properly wired receptacle before connecting to the product input or output terminals. A protective ground connection by way of the grounding conductor in the power cord is essential for safe operation.

Use the Proper Power Cord

Use only the power cord and connector specified for your product.
Use only a power cord that is in good condition.

Refer cord and connector changes to qualified service personnel.

Use the Proper Fuse

To avoid fire hazard, use only the fuse specified in the parts list for your product, and which is identical in type, voltage rating, and current rating.

Refer fuse replacement to qualified service personnel.

Do Not Operate In Explosive Atmospheres

To avoid explosion, do not operate this product in an atmosphere of explosive gases unless it has been specifically certified for such operation.

Do Not Remove Covers or Panels

To avoid personal injury, do not remove the product covers or panels. Do not operate the product without the covers and panels properly installed.

@ NOV 1978

SERVICING SAFETY SUMMARY

FOR QUALIFIED SERVICE PERSONNEL ONLY

Refer also to the preceding Operators Safety Summary.

Do Not Service Alone

Do not perform internal service or adjustment of this product unless another person capable of rendering first aid and resuscitation is present.

Use Care When Servicing With Power On

Dangerous voltages exist at several points in this product. To avoid personal injury, do not touch exposed connections and components while power is on.

Disconnect power before removing protective panels, soldering, or replacing components.

Power Source

This product is intended to operate from a power source that will not apply more than 250 volts rms between the supply conductors or between either supply conductor and ground. A protective ground connection by way of the grounding conductor in the power cord is essential for safe operation.

851 Digital Tester

@ NOV 1978

GENERAL INFORMATION

This section contains a description of the instrument and its performance characteristics, the accessories and documents supplied, and the accessories recommended for use with the instrument.

INTRODUCTION

The 851 is an easy-to-operate portable instrument for servicing digital equipment.

The instrument contains a DMM, a counter, and input signal conditioning circuits.

The DMM is an auto ranging 4 1/2-digit multimeter with floating inputs. In addition to the multimeter functions, it features capability for measuring peak voltage, temperature, its own line voltage, and internal logic threshold levels.

The counter is an auto ranging 5-digit, 35 MHz universal counter with 3 input channels. A variable pulse width discriminator provides all channels with pulse rejection for all input pulses that have less width than that selected.

Channel A has a dual-threshold input that reacts only to signal levels at or exceeding upper and lower limits. These limits are selectable (either preset TTL or variable threshold level). Variable Threshold range is −30 to +30 volts.

Each of the other channels (B and C) has a separate single threshold level control. Threshold levels can be set for TTL (detent position) or varied from −30 to +30 volts.

Each channel has separate logic level-indicating LEDs.

The 851 also provides a calibrated gated square-wave output at 5 kHz. This output is suitable for probe compensation and for verifying instrument operation.

STANDARD ACCESSORIES

3 Counter Probe Packages (length, 2 meters; color coded)
1 Set DMM Test Leads (color coded)
1 Operators Manual
1 Service Manual

OPTIONAL ACCESSORIES

P6430 Temperature Probe
Rain Jacket

NOTE

For further information about Standard and Optional Accessories, see Fig. 3 ACCESSORIES tab page at the back of this manual.

SPECIFICATION

The following instrument characteristics apply over an ambient temperature range of +15°C to +40°C unless otherwise specified.

Table 1-1

ELECTRICAL

DMM

Characteristic	Performance Requirement
Inputs	
Resistance and Capacitance	10 MΩ ±1% and approximately 100 pF, red to black terminal (volts only).
Maximun Safe Input Voltage	±500 V (peak), red terminal to ground, dc to 1 kHz. ±500 V (peak), black terminal to ground, dc to 1 kHz. ±500 V (peak), red to black terminal, dc to 1 kHz. ±250 V (peak), red to black terminal, in Ω function, dc to 1 kHz.
Resistance	
Ranges	200 Ω, 2 kΩ, 20 kΩ, 200 kΩ, 2 MΩ, 20 MΩ, and 50 mΩ.
Accuracy	
200 Ω, 2 kΩ, 20 kΩ, and 200 kΩ	±0.3% of reading ±4 counts (plus probe resistance).
2 MΩ	±0.5% of reading ±4 counts.
20 MΩ	±5% of reading ±10 counts.
50 MΩ	±10% of reading ±20 counts.
Extended Temperature Range	Add ±0.2% on 200 Ω through 2 MΩ and ±5% on 20 MΩ and 50 MΩ ranges to measurement accuracy for ambient temperature between +5°C and +15°C or +40°C and +50°C.
AC Volts (Average Responding, RMS Reading)	Calibrated for sine wave.
Ranges	2 V, 20 V, 200 V, and 350 V.
Accuracy	
2 V and 20 V	
40 Hz to 1 kHz	±0.5% of reading ±4 counts.
1 kHz to 25 kHz	±2% of reading ±4 counts (>9% full scale).
200 V and 350 V	
40 Hz to 1 kHz	±0.5% of reading ±4 counts.
Extended Temperature Range	Add ±0.2% to measurement accuracy for ambient temperature between +5°C and +15°C or +40°C and +50°C.
Common-Mode Rejection Ratio	⩾80 dB at dc; ⩾60 dB at 50 to 60 Hz (52 dB on 350 V range).

Table 1-1 (cont)

Characteristic	Performance Requirement
DMM (cont)	
DC Volts	
Ranges	2 V, 20 V, 200 V, and 500 V.
Accuracy	
2 V, 20 V, and 200 V	±0.1% of reading ±3 counts.
500 V	±0.15% of reading ±3 counts.
Extended Temperature Range	Add ±0.05% to measurement accuracy for ambient temperature between +5°C and +15°C or +40°C and +50°C.
Normal-Mode Rejection Ratio	⩾60 dB at 50 to 60 Hz (peak ac ⩽5 times full scale).
Common-Mode Rejection Ratio	⩾80 dB at dc; ⩾60 dB at 50 to 60 Hz.
Line Voltage Measurement	
Ranges	90 to 132 V and 180 to 250 V.
Accuracy	±3% of reading (from 48 to 440 Hz).
Temperature Measurement	
Range	−55°C to +150°C on surface measured.
Accuracy	±2°C (0.01°C resolution).
Extended Ambient Temperature	Add ±1°C to measurement accuracy for ambient temperature between +5°C and +15°C or +40°C and +50°C.
Maximum Safe Voltage (Component to Temperature Probe Tip)	±100 V peak.
+ and − Peak Volts Range	±30 V.
Accuracy	
Pulse	±2% of reading ±3% of p-p signal ±90 mV. Maximum time between recurrent peaks, 25 ms. Peak amplitude must be maintained for at least 25 ns.
Sine Wave	
40 Hz to 5 MHz	±2% of reading ±3% of peak-to-peak signal ±90 mV.
>5 MHz to 25 MHz	±2% of reading ±10% of peak-to-peak signal ±90 mV.
Extended temperature range	Add ±1% of reading ±1% of peak-to-peak signal ±10 mV.

Table 1-1 (cont)

COUNTER	
Characteristic	**Performance Requirement**
Inputs (3 probes—one for each channel: A, B, and C. All Input Characteristics are referenced to probe tip).	
Resistance and Capacitance	10 MΩ and approximately 12 pF.
Maximum Safe Input Voltage at Probe Tip	500 V peak (50 kHz or less). Linearly derated to 30 volts peak at 35 MHz.
Frequency	
Ranges	100 kHz, (1 Hz resolution), 1 MHz, 10 MHz, and 35 MHz.
Accuracy	±0.005% of reading ±1 count.
Maximum Input Frequency	35 MHz.
Minimum Input Pulse Width	14 ns.
Period	
Ranges	1 ms, (10 ns resolution), 10 ms, 100 ms, 1 s, and 10 s.
Accuracy	±0.005% of reading ±1 count ±Trigger Error[a] counts.
Minimum Input Pulse Width	14 ns.
Minimum Input Period	28 ns.
Pulse Width	
Ranges	1 ms, (10 ns resolution), 10 ms, 100 ms, 1 s, and 10 s.
Accuracy	±0.005% of reading ±1 count ±Trigger Error[a] counts.
Maximum Repetition Rate	30 MHz.
Minimum Measurable Pulse Width	20 ns.
Transition Time (CH A)	
Ranges	1 ms (10ns resolution), 10 ms, 100 ms, 1 s and 10 s.
Accuracy	±0.005% of reading ±1 count ±Trigger Error[a] counts.
Maximum Input Repetition Rate	30 MHz.
Minimum Measurable Time Interval	20 ns.

[a]See TRIGGER ERROR, Time Trigger Error, at end of Counter Characteristics.

Table 1-1 (cont)

Characteristic	Performance Requirement
COUNTER (cont)	
Time Interval (B→C)	
Ranges	1 ms (10 ns resolution), 10 ms, 100 ms, 1 s, and 10 s.
Accuracy	±0.005% of reading ±1 count ±Trigger Error[a] counts.
Maximum Repetition Rate	30 MHz.
Minimum Measurable Time Interval	20 ns.
Minimum Input Pulse Width	14 ns.
Coincidence Time (B · C)	
Ranges	1 ms (10 ns resolution), 10 ms, 100 ms, 1 s, and 10 s.
Accuracy	±0.005% of reading ±1 count ±Trigger Error[a] counts.
Maximum Repetition Rate	30 MHz.
Minimum Measurable Time Interval	20 ns.
Totalize (CH A) Range	0 to 99999 (one count resolution).
Maximum Input Frequency	35 MHz.
Minimum Input Pulse Width	14 ns.
Freqency Ratio (A/C)	
Range	0 to 99999 (one count resolution).
Accuracy	±1 count ±Count Trigger Error[b] counts.
Maximum Frequency Input	35 MHz (freq A ⩾ freq C).
Minimum Pulse Width A and C	14 ns.
Count A (B→C)	
Range	0 to 99999 (one count resolution).
Accuracy	±1 count ±Count Trigger Error[b] counts.
Maximum A Input Frequency	35 MHz.
Minimum Input Pulse Width A, B, and C	14 ns.

[a]See TRIGGER ERROR, Time Trigger Error, at end of Counter Characteristics.

[b]See TRIGGER ERROR, Count Trigger Error, at end of Counter Characteristics.

Table 1-1 (cont)

Characteristic	Performance Requirement
COUNTER (cont)	
Transitions A (B→C)	
Range	0 to 99999 (one count resolution).
Accuracy	±1 count ±Count Trigger Error[b] counts.
Maximum Input Frequency	17.5 MHz.
Minimum Input Pulse Width	
CH A	25 ns.
CH B and C	14 ns.
Duty Factor	
Range	0 to 100%.
Accuracy	±3% of full scale ±Duty Factor Trigger Error[c] counts. Minimum Pulse Width, HI or LO, not less than 50 ns.
Input Frequency Ranges	DC and 40 Hz to 10 MHz.
Threshold Levels Variable (4 controls)	
Range	±30 V, minimum.
Setability	±10 mV, maximum.
TTL	(Nominal, in detent position).
Input A	
LO	+0.7 V.
HI	+2.1 V.
Inputs B and C	+1.4 V.
Threshold Error (maximum difference between a displayed threshold voltage or TTL threshold voltage and the actual signal voltage at threshold crossing)	
Input A	
For Pulse at least 14 ns wide at threshold crossing	±100 mV ±2% of threshold voltage ±3% of p-p signal.
Inputs B and C	
For Pulses at least 14 ns wide at threshold crossing	±100 mV ±2% of threshold voltage ±8% of p-p signal.
Extended Temperature Range	Add ±20 mV ±2% of p-p signal to measurement accuracy for ambient temperature between +5°C and +15°C or +40°C and +50°C.

[b] See TRIGGER ERROR, Count Trigger Error, at end of Counter Characteristics.

[c] See TRIGGER ERROR, Duty Factor Trigger Error, at end of Counter Characteristics.

Table 1-1 (cont)

Characteristic	Performance Requirement
COUNTER (cont)	
Input Filter	
Narrow Pulse Rejection	
Range (Variable)	Off and 50 ns to >300 ns.
Accuracy	
50 ns	±20%.
Maximum Repetition Rate for Pulse Rejection	20 MHz.
Channel to Channel Delay mismatch	>100% of filter setting.

TRIGGER ERROR

(Maximum, in seconds)

$$\text{Duty Factor Trigger error (in percent)} = \pm \frac{\text{Time Trigger Error} \times 100}{\text{Period}}$$

$$\text{Time Trigger Error (in seconds)} = \pm \frac{\text{Threshold Error (see below for THRESHOLD ERROR)}}{\text{dv/dt of Signal}^{d} \text{ at Time of Start Threshold}}$$

$$\pm \frac{\text{Threshold Error (see below for THRESHOLD ERROR)}}{\text{dv/dt of Signal}^{d} \text{ at Time of Stop Threshold}}$$

± INPUT FILTER setting (sec).

Count Trigger = ± CH A Input Event Frequency or Transition Frequency, multiplied by Time Trigger Error.

THRESHOLD ERROR

Threshold Error is defined as the maximum difference between a displayed threshold voltage or TTL threshold voltage and the actual voltage at threshold crossing. Performance requirements follow:

CH A (HI and LO Thresholds). ±100 mV for pulses at least 14 ns wide, ±2% of threshold setting ±3% of p-p signal voltage.

CH B and CH C. ±100 mV for pulses at least 14 ns wide, ±2% of threshold setting ±8% of p-p signal voltage.

(For all channels, add ±20 mV ±2% of p-p signal for ambient temperature between +5°C and +15°C or +40°C and +50°C.)

[d]**Refer to the appropriate Input (CH A, CH B, or CH C) for the measurement being made.**

Table 1-1 (cont)

DISPLAY

Characteristic	Performance Requirement
Readout	
Digital	5 digits, fully buffered. 7-segment, 0.5" LEDS. Leading zero suppression.
Counter Gate	"+" indication when gate is open.
Polarity Indication	+ for positive readings, − for negative readings.
Over Range and Error Indication	Display flashes.
Upranging	Occurs at 100% of display range.
Downranging	
DMM	Occurs at 9% of DMM range.
Counter	Occurs at 8% of Counter range.
Range Indicators	LEDs show function and ranges in Ω, kΩ, MΩ, MHz, kHz, ms, μs, and V.
Logic State Indicators	Red, yellow, and green LEDs show valid and invalid logic state inputs with respect to thresholds set for Channel A. Red and green LEDs show a logic state above or below the threshold set for Channels B and C. Red LED indicates when Channel A LO and HI thresholds are locked together (LO threshold setting higher than HI setting).

CALIBRATOR

Characteristic	Performance Requirement
Calibrator	
Frequency	5 kHz.
Square-Wave Voltage	+8 V peak. −4 V peak.
Accuracy	±1%.
Pulse Width	100 μs.
Accuracy	±2% (measured with 851 using TTL presets).
Transition Time	0.25 μs to 0.70 μs (measured with 851 using TTL presets).

POWER REQUIREMENTS

Characteristic	Performance Requirement
Line Voltage (Selectable)	90 to 132 V or 180 to 250 V.
Frequency	48-440 Hz.
Power Consumption	57 watts maximum.
Fuse	See Replaceable Electrical Parts at the rear of this manual.

Table 1-2

ENVIRONMENTAL

Characteristic	Performance Requirement
Temperature	
Operating	+15°C to +40°C.
Extended	+5°C to +50°C.
Non-Operating	−40°C to +75°C.
Altitude	
Operating	To 10,000 ft.
Non-Operating	To 35,000 ft.
Shock	Two shocks at 30 G, 1/2 sine, 11 ms duration each direction along each major axis, total of 11 shocks.
Relative Humidity	To 90% at 30°C. To 40% at 50°C.
EMI	Reference Mil Standard 461A-462. Susceptability as specified. Conducted emission, relax 10 dB. Radiated emission, relax 15 dB <100 MHz and relax 25 dB ⩾100 MHz.
Warmup Time	None, if stored within operating temperature limits (relative humidity <70%) and no condensation is present. Otherwise, 1/2-hour maximum.
Vibration	
Operating	15 minutes along each of three major axes at a total displacement of 0.025-inch, p-p (4 g's at 55 Hz) with frequency varied from 10 Hz to 55 Hz to 10 Hz in one minute sweeps. After sweep vibration in each axis, hold frequency for ten minutes. All major resonances must be above 55 Hz.

Table 1-3

MECHANICAL

Characteristic	Performance Requirement
Weight (approximate)	
With Front Cover, No Accessories	6.3 kg (13 pounds, 14 ounces).
Without Front Cover, No Accessories	5.7 kg (12 pounds, 10 ounces).
With Front Cover, Standard Accessories	6.6 kg (14 pounds, 10 ounces).
Dimensions	
Width	33.3 cm (13 1/8 inches).
Height	31.75 cm (12 1/2 inches).
Depth	18.4 cm (7 1/4 inches).

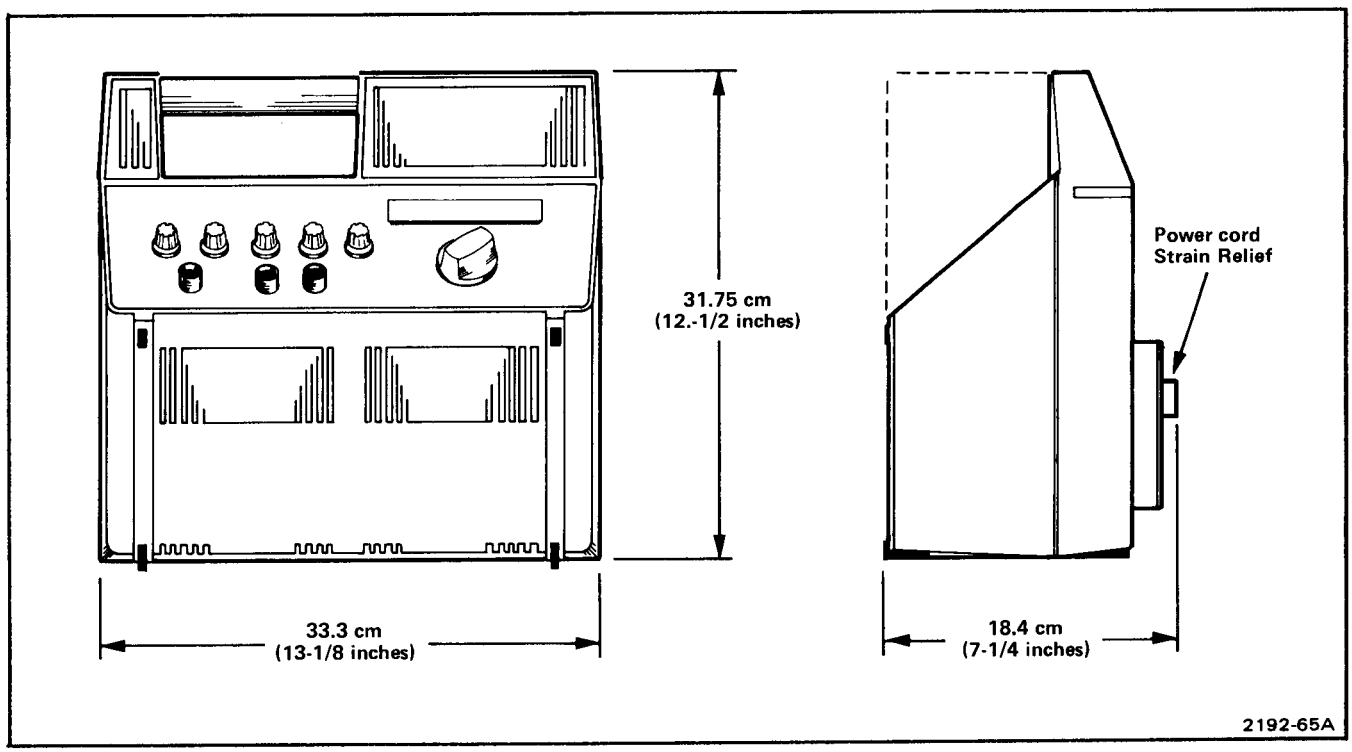

Fig. 1-1. 851 dimensional drawing.

@ NOV 1978

OPERATING INSTRUCTIONS

This section of the manual will help the operator or technician become familiar with the instrument. It covers power requirements, location and operation of external controls, connectors and indicators, and instrument checkout.

OPERATING VOLTAGE

The 851 is normally set to operate from a 90 to 132 volt ac power source. The 851 may be operated from a 180 to 250 volt ac power source by changing the Line Selector switch position (on bottom of cabinet) and replacing the fuse. Correct fuse values for each line voltage are listed in fuse data on back of the 851 cabinet.

PROBES

Use only the probes supplied with the instrument. Probes other than direct replacements may create safety hazards, damage the instrument, or give incorrect readings. CH A, CH B, CH C, and DMM probes may be interchanged with probes of the same types. CH A INPUT ADJUST must be reset if the CH A probe is replaced. See Operator Check and Adjustments.

The TEMP °C function must be internally recalibrated if the temperature probe is replaced. Refer to qualified service personnel.

Push in the CH A, CH B, or CH C INPUT outer ring to connect or disconnect the cable. Moderate pushing or pulling force is required to connect or disconnect the probe cable.

A color-coding ring (blue for CH A, green for CH B, and yellow for CH C) snaps into an annular groove near each end of the probe cable.

PROBING TECHNIQUES

CH A, CH B, and CH C probes must be grounded (ground leads are supplied, or grounding may be provided by use of a bnc-to-probe tip adapter) to minimize errors caused by ringing or high frequency noise. Probe grounding is especially important for PEAK V measurements.

CAUTION

Probe-tip voltage must not exceed ±500 V peak.

Do not exceed the Maximum Safe Input Voltages shown at the DMM connectors.

When measuring ACV or DCV, connect the black DMM terminal to the low, common, or ground side of the voltage source (via the black cable probe) and the DMM red terminal to the high, signal, or active side of the voltage source (through the red cable probe) to minimize capacitive loading effects and errors produced by common-mode signals.

To obtain the most accurate measurements of resistance values of 10 kΩ or less, first short the DMM probes together and note the probe resistance reading (less than 1 Ω). Then, subtract this reading from subsequent resistance readings.

The temperature probe should be applied to the surface to be measured as shown in the probe manual. The voltage on a conductive surface being measured must not exceed ±100 V peak with respect to ground. See the probe manual for more detail.

OPERATOR CHECKS AND ADJUSTMENTS

The following procedure is a functional checkout of the 851. The procedure indicates whether the selected function is operational; it is not a performance verification procedure. For performance verification, see Section 3 of this manual.

1. Connect the 851 to an appropriate power source and release POWER switch to the ON position. Set DISPLAY switch to CLEAR/TEST and hold. Readout should be ±8.8.8.8.8 while CLEAR/TEST is held down.

2. Set:

DISPLAY	NORM
RANGE	AUTO
A,B, and C SLOPE	POS
A and B THRESHOLD	TTL (detent)
C THRESHOLD	between −3.00 and 0.00 V

NOTE

To set threshold control voltages, set the 851 FUNCTION switch to the appropriate position (THRESHOLD A LO, THRESH A HI, THRESH B, or THRESH C). Adjust associated Threshold control for an 851 digital readout of the desired voltage. Return FUNCTION switch to desired setting.

3. Connect CH A, CH B, CH C, and red DMM probes to CAL OUT connector. Connect DMM black probe to gnd (input with ground symbol).

4. Set FUNCTION switch to positions shown in the left column of Table 2-1.

5. CHECK—that the readout is within the limits given for the FUNCTION selected.

Table 2-1

SELF TEST CHECKOUT

FUNCTION Switch Position	Readout (or limits)
−PEAK V	−3.500 to −4.500 V for 8 seconds of each 10. Approaches +8 V for 2 seconds of each 10.
+PEAK V (use for probe compensation)	+7.66 to +8.34 V. The CAL OUT signal alternates between a dc reference level and a square wave. When CH C indicates a HI input, read the reference level; while CH C HI and LO flash, set INPUT ADJUST for a reading within ±0.06 V of the reference level.

Table 2-1 (cont)

FUNCTION Switch Position	Readout (or limits)
% DUTY FACTOR	46.00 to 54.00
FREQ	4.999 to 5.001 kHz
PERIOD	199.99 to 200.01 μs
WIDTH	98.000 to 102.00 μs
TRNSN TIME (HI→LO)	0.25 to 0.70 μs
TOTALIZE	Continuously Changing
FREQ RATIO A/C	01
A COUNT (B→C)	01
A TRNSN (B→C)	02
TIME (B→C)	199.00 to 201.00 μs
TIME (B·C)	98.000 to 102.00 μs
THRESHOLD A LO	+0.600 to +0.800 V
THRESH A HI	+2.000 to +2.200 V
THRESH B	+1.300 to +1.500 V
THRESH C	0.00 to −3.00 (as set in step 2)
LINE V	90 to 132 V or 180 to 250 V
TEMP° C	Measure ambient room temperature (in °C) when optional temperature probe attached. Otherwise readings are irrelevant.

EXTERNAL CONTROLS, CONNECTORS, AND INDICATORS

POWER CONTROLS

(1) Line Selector (115-230) Switch (accessible through bottom panel). Set the instrument for operation on the available line voltage. Install appropriate fuse value; see fuse data on back of instrument cabinet.

(2) POWER. Push and release to turn on; push again to turn off. (Power is on when button is in out position.)

SELF TEST

(3) CAL OUT. Square-wave signal for checking instrument and for making CH A input compensation adjustment.

(4) INPUT ADJUST. Screwdriver adjustment for setting CH A input compensation.

(5) INPUT. Shielded connectors for CH A, CH B, and CH C.

(6) Ground. Chassis ground connector.

(7) DMM. Floating inputs for DCV, ACV, and Ω.

(8) TEMP. Temperature probe input.

INPUT CONTROLS

(9) THRESHOLD. Two threshold controls for CH A and one each for CH B and CH C set the input threshold voltage for the respective channel. Each control has a preset TTL detent position, and is continuously variable between −30 and +30 volts. Backlash type controls combine both coarse and fine adjustments. The fine range is approximately 1 volt.

The CH A LO threshold sets the trigger point for high-to-low edges to indicate invalid logic levels and minimize the effects of CH A signal noise and ringing. Set the LO and HI threshold levels for the worst case logic high and low input levels for the circuit under test. CH A preset TTL thresholds, 0.7 and 2.1 volts, respectively, correspond to worst case TTL input levels, 0.8 and 2.0 volts, with 0.1-volt margin to ensure invalid logic detection.

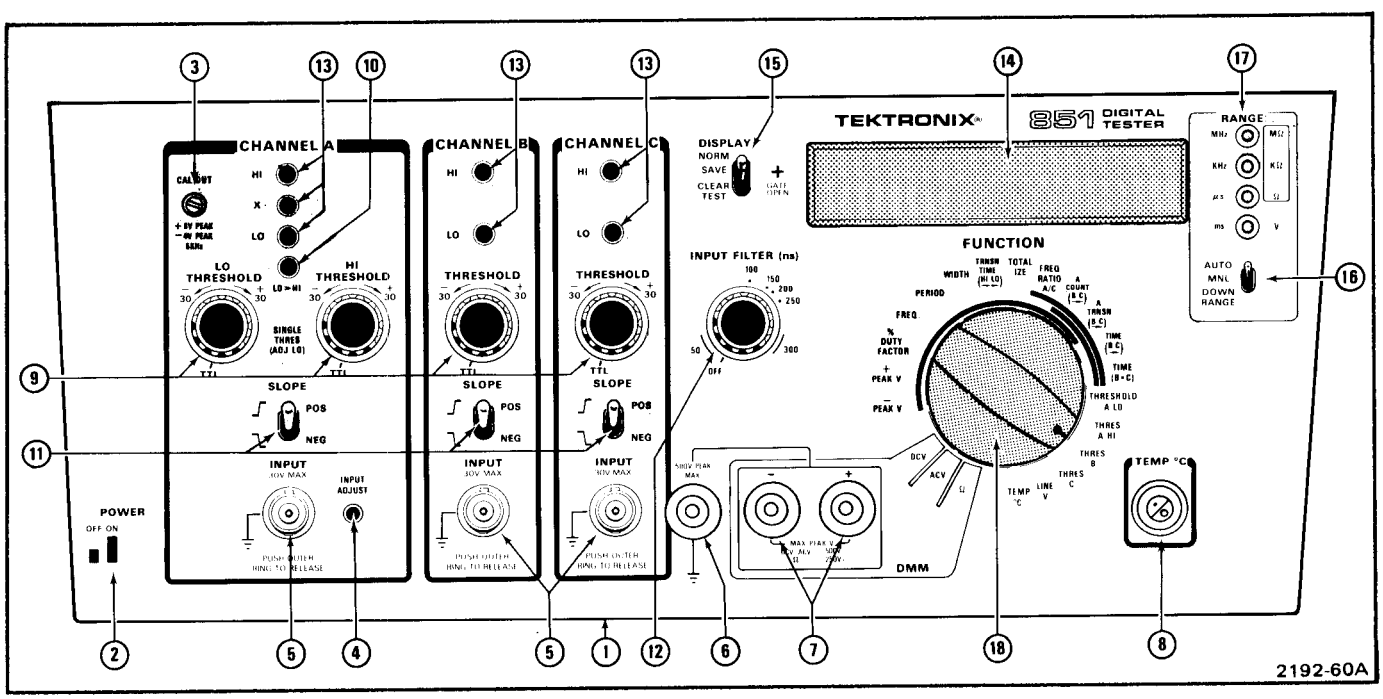

Fig. 2-1. 851 Digital Tester external contols, connectors, and indicators.

(10) LO>HI. Indicates when the LO THRESHOLD control is set to a voltage higher than that set by the HI THRESHOLD control. When LO>HI LED is lit, both thresholds are set by the LO THRESHOLD control (HI THRESHOLD control is inoperative). To set separate LO and HI thresholds, first adjust LO, then HI. For convenience, where a single CH A threshold is adequate, set HI THRESHOLD just out of TTL preset position; then set LO THRESHOLD to the desired single threshold level.

(11) SLOPE (one for each input: CH A, CH B, and CH C). Selects the signal direction to which the instrument responds.

(12) INPUT FILTER (ns). Rejects pulses less than the selected width in CH A (except in +PEAK V, −PEAK V, and TRNSN TIME), CH B, and CH C.

READOUT

NOTE

When FUNCTION switch (item 18) is set to +PEAK VOLTS or to −PEAK VOLTS and a signal is applied to the CHANNEL A INPUT: For SN B020550-up, the X indicator will be activated at fairly constant intensity after the first few seconds and the HI and LO indicators will not be illuminated (regardless of signal levels, signal amplitudes or THRESHOLD settings); For SN below B020550, the LO and HI logic state indicators may be fully illuminated or may flash alternately and the X (transition) indicator may vary in intensity (depending on signal levels, signal amplitudes and CHANNEL A THRESHOLD settings).

(13) Logic State Indicators. CH A HI, X, and LO indicate signals more positive than the HI threshold, between thresholds, and more negative than the LO threshold, respectively. CH B and CH C HI and LO indicate signals more positive or more negative than the CH B and CH C thresholds, respectively. Flashing HI or LO indicates that the signal crosses the respective threshold; for example, CH A LO flashing without CH A flashing indicates that the signal is active around the LO threshold but does not reach the HI threshold. CH A X brightness indicates the proportion of the total time that the signal is between thresholds, normally an invalid logic level.

(14) Digital Display. Up to 5-digit decimal readout. Plus or minus sign displayed indicates polarity for +PEAK V, −PEAK V, THRESHOLDS, and DCV. A plus or minus sign displayed for a temperature measurement indicates direction from 0 degrees Celsius.

The plus sign also indicates that a time measurement or a gated count is being made. If the plus sign is not lit in a time measurement or a count function, the initiating condition has not occurred. If the plus sign does not extinguish in a time measurement or count function, the terminating condition has not occurred.

DISPLAY AND RANGE CONTROLS

(15) DISPLAY

NORM: The display updates up to three times per second. The display holds a time measurement or gated count until a new measurement or count occurs.

SAVE: The display updates after one measurement cycle and holds the result (except in TOTALIZE, the accumualtion of counts stops and the display holds the total count). However, the display information may change if the FUNCTION switch setting is changed.

CLEAR TEST: Gives a display test reading of ±8.8.8.8.8 when pushed to CLEAR TEST; initiates one measurement cycle when released (except in TOTALIZE, the display holds zero).

(16) RANGE

AUTO: Fully automatic ranging for all functions.

MNL: Holds any selected range.

DOWN RANGE: Momentarily push to DOWN RANGE to select the next lower range or to select the highest range if the lowest was previously selected.

The most frequent use of manual ranging is to prevent the instrument from changing ranges during an adjustment procedure.

(17) RANGE Indicators. Indicate the physical units of a measurement. To determine the full-scale range of the display, refer to Table 2-2.

(18) FUNCTION. Refer to Table 2-3 for detailed description of the FUNCTION SWITCH.

Table 2-2

DECIMAL POINTS AND RANGE INDICATORS

Function	Range	Zero Display	Max Absolute Value	Range Indicator
PEAK V	20 V	0.00	19.99	V
	30 V	0.0	30.0	V
	30 V (MNL only)	0.	30.	V
% DUTY FACTOR		0.00	100.00	
FREQUENCY	100 kHz	0.000	99.999	kHz
	1 MHz	0.00	999.99	kHz
	10 MHz	0.0000	9.9999	MHz
	35 MHz	0.000	35.000	MHz
PERIOD, WIDTH, TRNSN TIME, TIME (B→C),and TIME (B·C)	1 ms	0.00	999.99	μs
	10 ms	0.0000	9.9999	ms
	100 ms	0.000	99.999	ms
	1 s	0.00	999.99	ms
	10 s	0.0	9999.9	ms
TEMP °C		0.00	150.00	
THRESHOLD, LINE V, ACV, and DCV	2 V[a]	0.0000	1.9999	V
	20 V	0.000	19.999	V
	200 V	0.00	199.99	V
	350 V[b]	0.0	350.0	V
	500 V[c]	0.0	500.0	V
Ω	200 Ω	0.00	199.99	Ω
	2 kΩ	0.0000	1.9999	kΩ
	20 kΩ	0.000	19.999	kΩ
	200 kΩ	0.00	199.99	kΩ
	2 MΩ	0.0000	1.9999	MΩ
	20 MΩ	0.000	19.999	MΩ
	50 MΩ	0.00	50.0	MΩ

[a] **2 V RANGE only in ACV and DCV functions.**

[b] **AC Voltages only.**

[c] **DC Voltages only.**

Table 2-3

FUNCTION SWITCH DESCRIPTION

Function Switch Position (Related Controls)	Functional Description	Signal Inputs (Waveforms Shown for POS Slope Settings)
−PEAK V (Display, Range)	Measures the most negative peak value of a repetitive signal.	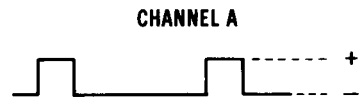
+PEAK V (Display, Range)	Measures the most positive peak value of a repetitive signal.	
% DUTY FACTOR (Display, Input Filter, Thresholds, Slope)	Measures the ratio of pulse width to pulse period for repetitive signals. The SLOPE control selects the positive or negative portion of the signal.	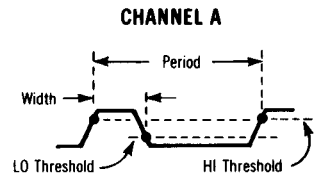
FREQ (Display, Input Filter, Range, Thresholds, Slope)	Measures the frequency of a signal.	
PERIOD (Display, Input Filter, Range, Thresholds, Slope)	Measures the time for one cycle of a signal.	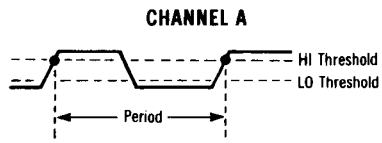
WIDTH (Display, Input Filter, Range, Thresholds, Slope)	Measures the width of a pulse. The SLOPE control selects the positive or negative portion of the signal.	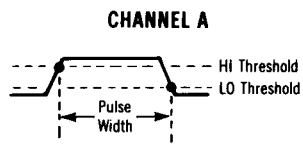
TRNSN TIME (LO→HI) (Display, Range, Thresholds, Slope)	Measures the time the signal takes to change from one threshold to the other (transition time). The SLOPE control selects the positive-going or negative-going transition.	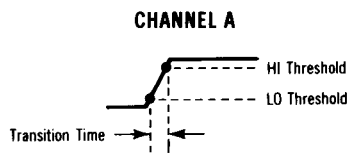
TOTALIZE (Display, Input Filter, Thresholds, Slope)	Continuously counts events. Initialize by switching the DISPLAY switch to CLEAR/TEST and back to NORM.	
FREQ RATIO A/C (Display, Input Filter, Thresholds, Slope)	Counts the number of events on CH A during the period of one event on CH C (Ratio ⩾ 1).	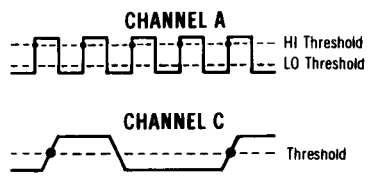
A COUNT (B→C) (Display, Input Filter, Thresholds, Slope)	Counts events on CH A during the interval starting with a transition on CH B and ending with a transition on CH C. The SLOPE controls select positive or negative transitions for counting, starting, and stopping.	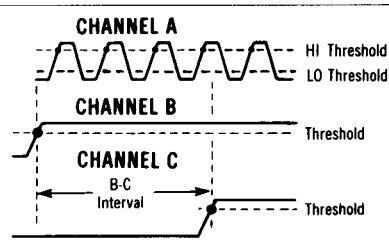

Table 2-3 (cont)

FUNCTION SWITCH DESCRIPTION

Switch Position (Related Controls)	Functional Description	Signal Inputs (Waveforms Shown for POS Slope Settings)
A TRNSN (B→C) (Display, Input Filter, Thresholds, B, C Slopes)	Counts all transitions on CH A during the interval starting with a transition on CH B and ending with a transition on CH C. CH B and CH C SLOPE controls select positive or negative transitions for starting and stopping.	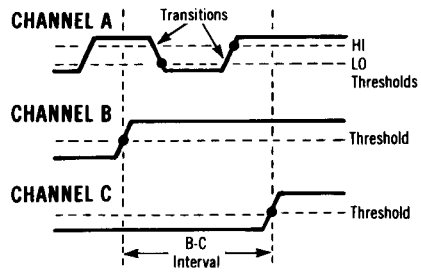
TIME (B→C) (Display, Range, Input Filter, Thresholds, Slopes)	Measures the interval starting with a transition on CH B and ending with a transition on CH C. The SLOPE controls select positive or negative transitions for starting and stopping.	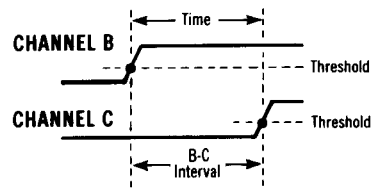
TIME (B·C) (Display, Range, Input Filter, Thresholds, Slopes)	Measures the time that the signals on CH B and CH C are coincident. The SLOPE controls determine the areas of coincidence (e.g., a positive pulse and a negative pulse may be coincident if the positive SLOPE for one and the negative SLOPE for the other is selected).	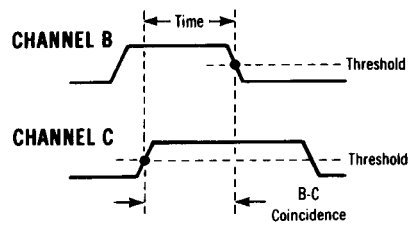
THRESHOLD A LO (Display, Range, Threshold)	Measures the CH A LO threshold.	INTERNALLY GENERATED THRESHOLD VOLTAGES. USE FOR SETTING VARIABLE THRESHOLDS.
THRESHOLD A HI (Display, Range, Threshold)	Measures the CH A HI threshold.	
THRESHOLD B (Display, Range, Threshold)	Measures the CH B threshold.	
THRESHOLD C (Display, Range, Threshold)	Measures the CH C threshold.	
LINE (Display, Range)	Measures the power-line voltage.	Internal Source.
TEMP °C (Display)	Measures temperature in degrees Celsius.	Temperature probe.
Ω (Display, Range)	Measures resistance.	Red and black DMM inputs.
ACV (Display, Range)	Measures ac voltage.	Red and black DMM inputs.
DCV (Display, Range)	Measures dc voltage.	Red and black DMM inputs.

PERFORMANCE CHECK

INTRODUCTION

PURPOSE

Use this procedure to verify performance of a newly purchased or a recently calibrated 851.

LIMITS AND TOLERANCES

The limits and tolerances given in this procedure assume the 851 was calibrated (and is being tested) at an ambient temperature between +20°C and +30°C. No warmup time is required if the 851 was stored at a relative humidity of less than 70% and no condensation is present. Maximum warmup time if these conditions are not met is 30 minutes.

All test limits given in this procedure are for the 851 under test and do not include test equipment error.

EQUIPMENT REQUIRED

To accomplish a complete Performance Check, you will need the equipment listed in Table 3-1.

Table 3-1

TEST EQUIPMENT REQUIRED

Description	Minimum Specifications	Use	Example
1. DC Voltage Calibrator	Voltage, 10 mV to 500 V; accuracy, within .01%.	DCV accuracy. DC common mode rejection. Logic state indicators. + and − PEAK accuracy.	1. Fluke 341A DC Voltage Calibrator.
2. AC Voltage Calibrator with Amplifier	Voltage, 10 mV to 350 V rms; accuracy, .05% 20 Hz −20 kHz.	ACV accuracy. DC normal mode rejection. AC common mode rejection. Transition time.	1. Fluke 5200A/5215A Voltage Calibrator. 2. Fluke 5200A/5205A Voltage Calibrator.
3. Resistance Standard	Ω Range, 10 Ω to 18 MΩ; accuracy, 0.03%.	Ohms accuracy.	1. ESI Decabox, model 65. Resistance standard.
10 MΩ resistor	0.1% tolerance.	Ohms accuracy.	
15 MΩ resistor	0.1% tolerance.	Ohms accuracy.	
40 to 50 MΩ resistor	0.1% tolerance.	Ohms accuracy.	
4. Temperature equalizing block[a]		TEMP °C accuracy.	See Fig. 3-2.

[a]Required only if instrument is to be used with optional temperature probe accessory or with Option 1 instruments.

Table 3-1 (cont)

Description	Minimum Specifications	Use	Example
5. Container[a]	Insulated.	Fill with water and crushed ice for Temp °C accuracy.	
6. Thermometer[a]	Range, 0°C to above maximum room temperature; accuracy, within 0.2°C.	Temp °C accuracy.	1. ASTM 67C, Nurnberg Catalog Number 5790.
7. Test Oscilloscope (with included or accessory 10X probe)	200 MHz B.W.	Input filter. Duty Factor accuracy PEAK FREQ PERIOD WIDTH TOTALIZE FREQ RATIO A/C CHANNEL A 14 ns Sensitivity CHANNEL B 14 ns Sensitivity CHANNEL C 14 ns Sensitivity A COUNT B→C A TRNSN B→C TIME B→C TIME B·C	1. TEKTRONIX 485[b] portable oscilloscope. 2. TEKTRONIX 7904 oscilloscope with 7A19 and either 7B92A, 7B80 or 7B85 plug-ins.
8. Leveled sine-wave Generator	Flatness: Amplitude flat within 1% from 50 kHz to 35 MHz.	DUTY FACTOR. PEAK. Channel A 14 ns Sensitivity Channel B 14 ns Sensitivity Channel C 14 ns Sensitivity	1. TEKTRONIX SG 503[c] with included precision 50 Ω cable.
9. Pulse Generator	Minimum pulse width at 40 Hz of 5 ns, or less; risetime and falltime, less than 1 ns.	Input Filter. PEAK CHANNEL A 14 ns Sensitivity CHANNEL B 14 ns Sensitivity CHANNEL C 14 ns Sensitivity	1. TEKTRONIX PG 502.[c]
10. Digital Delay	Pulse Counting to >50 MHz (should have Trig View output).	FREQ PERIOD WIDTH TOTALIZE FREQ RATIO A/C A COUNT B→C A TRNSN B→C TIME B→C TIME B·C CHANNEL B 14 ns Sensitivity CHANNEL C 14 ns Sensitivity	1. TEKTRONIX DD 501[c] (modified by internal jumper change).

[a]Required only if instrument is to be used with optional temperature probe accessory or with Option 1 instruments.

[b]A TEKTRONIX 475 or 475A may be used, but the 485 provides better resolution.

[c]Requires a TM 500 Series power module.

Table 3-1 (cont)

Description	Minimum Specifications	Use	Example
11. Time Mark Generator	Time accuracy, better than .001%.	Input Filter FREQ PERIOD WIDTH TOTALIZE FREQ RATIO A/C A TRNSN B→C TIME B→C TIME B·C	1. TEKTRONIX TG 501 Option 1.[c]
12. Power Module		Provide operating power for TM 500 test equipment.	1. TEKTRONIX TM 504 or TM 506 or combinations of TM 501 and TM 503.
13. Terminations (3)	Impedance, 50 Ω; connectors, BNC.	Signal interconnection cable termination.	1. Tektronix Part Number 011-0049-01.
14. Dual input coupler	Connectors, 2 BNC female to 1 BNC male.	Signal interconnection.	1. Tektronix Part Number 067-0525-01.
15. T Connector (3)	Connectors, 2 BNC female to 1 BNC male.	Signal interconnection.	1. Tektronix Part Number 103-0030-00.
16. BNC-to-Probe-Tip Adapter (3 required)	Connectors, BNC male to probe tip.	Signal interconnection.	1. Tektronix Part Number 013-0084-01.
17. Cables (3 required)	Connectors, BNC; length, 42 inches; impedance, 50 Ω.	Signal interconnection.	1. Tektronix Part Number 012-0057-01.
18. Attenuator	Impedance, 50 Ω; attenuation 5X; connectors, BNC.	Signal attenuation.	1. Tektronix Part Number 011-0060-02.

[c]**Requires a TM 500 Series power module.**

INDEX TO PERFORMANCE CHECK (SHORT FORM PROCEDURE)

PART ONE

1. Check LED Readout 3-4
2. Check DCV Accuracy 3-4
3. Check ACV Accuracy 3-5
4. Check DC Normal Mode Rejection 3-6
5. Check DC Zero 3-6
6. Check AC Zero 3-6
7. Check AC Common-Mode Rejection 3-7
8. Check DC Common-Mode Rejection 3-8
9. Check Ω Accuracy 3-8
10. Check TEMP °C Accuracy 3-9
11. Check LINE V Accuracy 3-10
12. Check TRNSN TIME Accuracy 3-10
13. Check THRESHOLD Functions 3-10
14. Check Logic State Indicators 3-11
15. Check Input Filter 3-13
16. Check % DUTY FACTOR Accuracy 3-14
17. Check + and − PEAK Accuracy (sine wave) 3-15
18. Check + and − PEAK Accuracy (dc) 3-17
19. Check + and − PEAK Accuracy (40 Hz) 3-17
20. Check CALIBRATOR 3-19

PART TWO

NOTE

The remaining part of this procedure requires the use of a modified TEKTRONIX DD 501 Digital Delay. If the DD 501 you have is not modified, refer modification to qualified service personnel. Instructions for this modification are located in the Maintenance section of this manual.

21. Check FREQ Accuracy 3-19
22. Check PERIOD Accuracy 3-20
23. Check WIDTH Accuracy 3-22
24. Check TOTALIZE Accuracy 3-22
25. Check FREQ RATIO A/C Accuracy 3-22
26. Check A COUNT (B→C) Accuracy 3-23
27. Check TRNSN (B→C) Accuracy 3-23
28. Check TIME (B→C) Accuracy 3-24
29. Check TIME (B·C) Accuracy 3-24
30. Check CHANNEL A 14 ns Sensitivity 3-24
31. Check CHANNEL C 14 ns Sensitivity 3-26
32. Check CHANNEL B 14 ns Sensitivity 3-26

PERFORMANCE CHECK PROCEDURE (PART 1)

1. Check LED Readout

a. Test equipment required:

none

b. Plug power cord into correct line voltage (see Operating Voltage on page 2-1) and set POWER switch to the ON position.

c. Push and hold DISPLAY switch in CLEAR TEST position.

d. CHECK—for ±8.8.8.8.8 on readout.

2. Check DCV Accuracy

a. Test equipment required:

DC Voltage Calibrator

b. Set:

FUNCTION	DCV
DISPLAY	NORM
RANGE	AUTO

c. CHECK—V RANGE indicator LED is lit.

d. Set dc voltage standard to .01 volt range and connect 851 DMM leads to dc voltage standard outputs (+ to + and − to −).

e. CHECK—851 readout + (plus) sign is lit.

f. CHECK—Accuracy according to Table 3-2.

Table 3-2

DCV ACCURACY

DC VOLTAGE STANDARD OUTPUT (Volts dc)	LIMITS	
	LOW	HIGH
0.0100	0.0097	0.0103
0.1000	0.0996	0.1004
1.0000	0.9987	1.0013
10.000	9.987	10.013
250.00	249.4	250.6
500.00	499.0	501.0

g. Set dc voltage calibrator to 0.1000 volt.

h. Reverse 851 DMM lead connections to voltage calibrator.

i. CHECK—that − (minus) sign is lit.

j. CHECK—accuracy according to Table 3-2 (minus sign should be lit for remainder of Step 2).

k. Set dc voltage calibrator to 500 V.

l. Set DISPLAY switch to SAVE.

m. Set dc voltage calibrator to 5.000 V.

n. CHECK—readout did not change when voltage was changed.

o. Set DISPLAY switch to CLEAR TEST and release.

p. CHECK—Readout now reads about 5.00 volts.

q. Set DISPLAY switch to NORM.

r. Disconnect dc voltage calibrator.

3. Check ACV Accuracy

a. Test equipment required:

AC Voltage Calibrator

b. Set:

FUNCTION	ACV
DISPLAY	NORM
RANGE	AUTO

c. CHECK—V RANGE indicator is lit.

d. Connect ac voltage calibrator Guard terminal to its LO output terminal.

e. Connect 851 DMM leads to ac voltage calibrator outputs.

f. CHECK—accuracy according to Table 3-3.

Table 3-3

ACV ACCURACY

AC Voltage Calibrator (Volts rms)	Input Frequency	Limits	
		Low	High
0.01	40 Hz	0.0096	0.0104
0.1	40 Hz	0.0991	0.1009
1.0	40 Hz	0.9946	1.0054
10.0	40 Hz	9.946	10.054
100.0	40 Hz	99.46	100.54
100.0	900 Hz	99.46	100.54
10.0	900 Hz	9.946	10.054
1.0	900 Hz	0.9946	1.0054
1.0	25 kHz	0.9796	1.0204
10.0	25 kHz	9.796	10.204
180.0	900 Hz	179.06	180.94
180.0[a]	900 Hz	178.7	180.3
350.0	900 Hz	347.8	352.2

[a]**Manually range to 350 V range (only one digit to right of decimal point).**

ADD AMPLIFIER TO AC VOLTAGE CALIBRATOR

WARNING

Set ac voltage calibrator output to 0 V when adding or removing amplifier in test setup.

4. Check DC Normal Mode Rejection (60 Hz)

a. Test equipment required:

AC Voltage Calibrator

b. Set:

FUNCTION	DCV
RANGE	AUTO
DISPLAY	NORM

c. Short 851 DMM leads together and record 851 reading (851 DMM leads not connected to ac voltage calibrator).

d. Connect ac voltage calibrator Guard terminal to calibrator LO terminal.

e. Connect 851 DMM − (minus) lead to ac voltage calibrator LO terminal and 851 + lead to calibrator HI terminal.

f. CHECK—accuracy according to Table 3-4.

g. Disconnect ac voltage calibrator.

Table 3-4

DC NORMAL-MODE REJECTION

RMS Voltage In	Range	Readout Limits
7 V	2 V (Auto)	Within ±0.0100 V of short-circuit reading in Step 4, part c.
Connect Amplifier 350 V	Down Range Manually 500 V	Within ±0.5 V of short-circuit reading in Step 4, part c.
350 V	Down Range Manually 200 V	Within ±0.50 V of short-circuit reading in Step 4, part c.
70 V	Down Range Manually 20 V	Within ±0.100 V of short-circuit reading in Step 4, part c.

5. Check DC Zero

a. Test equipment required:

none

b. Set:

FUNCTION	DCV
DISPLAY	NORM
RANGE	AUTO

c. Connect 851 DMM leads together and connect them to the 851 chassis ground (use CHANNEL C ground clip for chassis ground).

d. Set RANGE switch to DOWN RANGE and release (to MNL position) to check each range.

e. CHECK—851 readings are within the limits given in Table 3-5.

Table 3-5

CHECK DC ZERO

Range	Readout Limits
500 V	−0.3 to +0.3
200 V	−0.03 to +0.03
20 V	−0.003 to +0.003
2 V	−0.0003 to +0.0003

6. Check AC Zero

a. Test equipment required:

none

b. Set:

FUNCTION	ACV
DISPLAY	NORM
RANGE	AUTO

c. Connect 851 DMM leads together and connect them to the 851 chassis ground (use CHANNEL C ground clip for chassis ground).

d. Set RANGE switch to DOWN RANGE and release (to MNL position) to check each range.

e. CHECK—851 readings are within the limits given in Table 3-6.

Table 3-6

CHECK AC ZERO

Range	Readout Limits
350 V	0.0 to 0.4
200 V	0.00 to 0.04
20 V	0.000 to 0.004
2 V	0.0000 to 0.0004

7. Check AC Common-Mode Rejection

a. Test equipment required:

AC Voltage Calibrator
1 kΩ resistor

b. Set:

FUNCTION	ACV
DISPLAY	NORM
RANGE	AUTO

c. Short 851 leads together and record 851 reading.

d. Connect ac voltage calibrator Guard terminal to calibrator LO terminal.

e. Connect 851 chassis ground to ac voltage calibrator LO terminal (connect CHANNEL C ground clip to calibrator LO).

f. Connect 851 DMM + lead to ac voltage calibrator HI terminal.

g. Connect 851 DMM − (minus) lead to ac voltage calibrator HI through a 1 kΩ resistor.

h. Set ac voltage calibrator output to 350 volts rms (through amplifier) at 60 Hz.

i. CHECK—851 reading is within the limits given in Table 3-7.

j. Reverse 851 DMM leads at 851 inputs.

Table 3-7

AC COMMON-MODE REJECTION

RMS Voltage In	Range	Readout Limits
350	2 V (AUTO)	Within ±0.5000 V of short-circuit reading in Step 7, part c.
350	Down Range Manually 350	Within ±1.0 V of short-circuit reading in Step 7, part c.
350	Down Range Manually 200	Within ±0.50 V of short-circuit reading in Step 7, part c.
350	Down Range Manually 20	Within ±0.500 V of short-circuit reading in Step 7, part c.

k. CHECK—851 readings are within the limits given in Table 3-7.

l. Set FUNCTION switch to DCV.

m. CHECK—851 readings are within the limits given in Table 3-7.

n. Reverse 851 DMM leads at 851 inputs.

o. CHECK—851 readings are within the limits given in Table 3-7.

p. Disconnect ac voltage calibrator and 1 kΩ resistor.

8. Check DC Common-Mode Rejection

a. Test equipment required:

DC Voltage Calibrator
1 kΩ resistor

b. Set:

FUNCTION	DCV
DISPLAY	NORM
RANGE	AUTO

c. Short 851 DMM leads together and record 851 reading.

d. Connect 1 kΩ resistor between 851 + and − (minus) DMM leads.

e. Connect 851 DMM + lead to dc voltage calibrator + output.

f. Connect 851 chassis ground to dc voltage calibrator − (minus) output (use ground clip on CHANNEL C probe).

g. Set dc voltage calibrator to 500 volts.

h. CHECK—851 readings are within the limits given in Table 3-8.

i. Disconnect dc voltage calibrator.

Table 3-8

DC COMMON-MODE REJECTION

DC Volts In	Range	Readout Limits
500	2 V (AUTO)	Within ±0.0500 V of short-circuit reading in Step 8, part c.
500	Down Range Manually 500 V	Within ±0.1 V of short-circuit reading in Step 8, part c.
500	Down Range Manually 200 V	Within ±0.05 V of short-circuit reading in Step 8, part c.
500	Down Range Manually 20 V	Within ±0.050 V of short-circuit reading in Step 8, part c.

9. Check Ω Accuracy

a. Test equipment required:

Resistance Standard
10 MΩ resistor
15 MΩ resistor
44.8 MΩ resistor

b. Set:

FUNCTION	Ω
DISPLAY	NORM
RANGE	AUTO

c. Short 851 DMM leads together and record 851 reading.

d. CHECK—Ω LED is lit.

e. Connect 851 DMM leads to resistance standard.

f. CHECK—accuracy according to Table 3-9.

g. Disconnect test equipment.

Table 3-9

Ω ACCURACY

INPUT RESISTANCE[a]	LIMITS LOW	LIMITS HIGH	RANGE LED
100 Ω	99.66[b]	100.34[b]	Ω
1 kΩ	0.9966[b]	1.0034[b]	kΩ
10 kΩ	9.966	10.034	kΩ
100 kΩ	99.66	100.34	kΩ
1 MΩ	0.9946	1.0054	MΩ
10 MΩ	9.480	10.520	MΩ
15 MΩ	14.225	15.775	MΩ
Manually set RANGE to Ω. DOWN RANGE once more and release to MNL			
15 MΩ	13.29	16.71	MΩ
44.8 MΩ[c]	40.12	49.48	MΩ

[a]Use resistance standard for 100 Ω through 15 MΩ and precision resistor (0.1%) above 15 MΩ.

[b]Add probe resistance to these figures for correct limits.

[c]May be any precision resistor between 40 MΩ and 50 MΩ. Calculate limits as follows:

High Limit = Resistor Value + (0.1 X Resistor Value) + 0.20.
Low Limit = Resistor Value − (0.1 X Resistor Value) − 0.20.

NOTE

Perform Step 10 only if optional temperature probe is to be used with the 851 or if the 851 is an Option 1 version.

10. Check TEMP°C Accuracy (using optional temperature probe)

a. Test equipment required:

Temperature Equalizing Block (see Fig. 3-2)
Thermometer
Container of water and crushed ice

b. Set:

FUNCTION	TEMP°C
DISPLAY	NORM
RANGE	AUTO

c. Connect temperature probe to 851 TEMP°C input.

CAUTION

When placing the temperature probe in a solution, keep the liquid level below the bulge in the probe body (see Fig. 3-1).

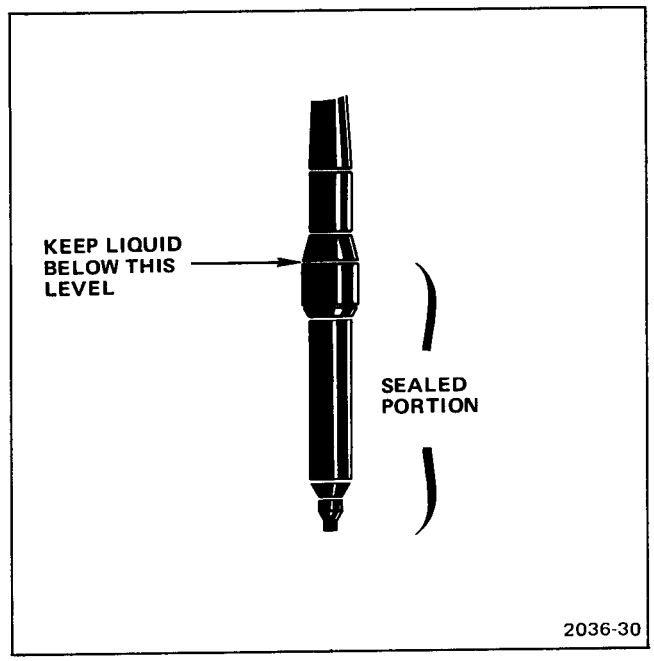

Fig. 3-1. Sealed portion of optional temperature probe.

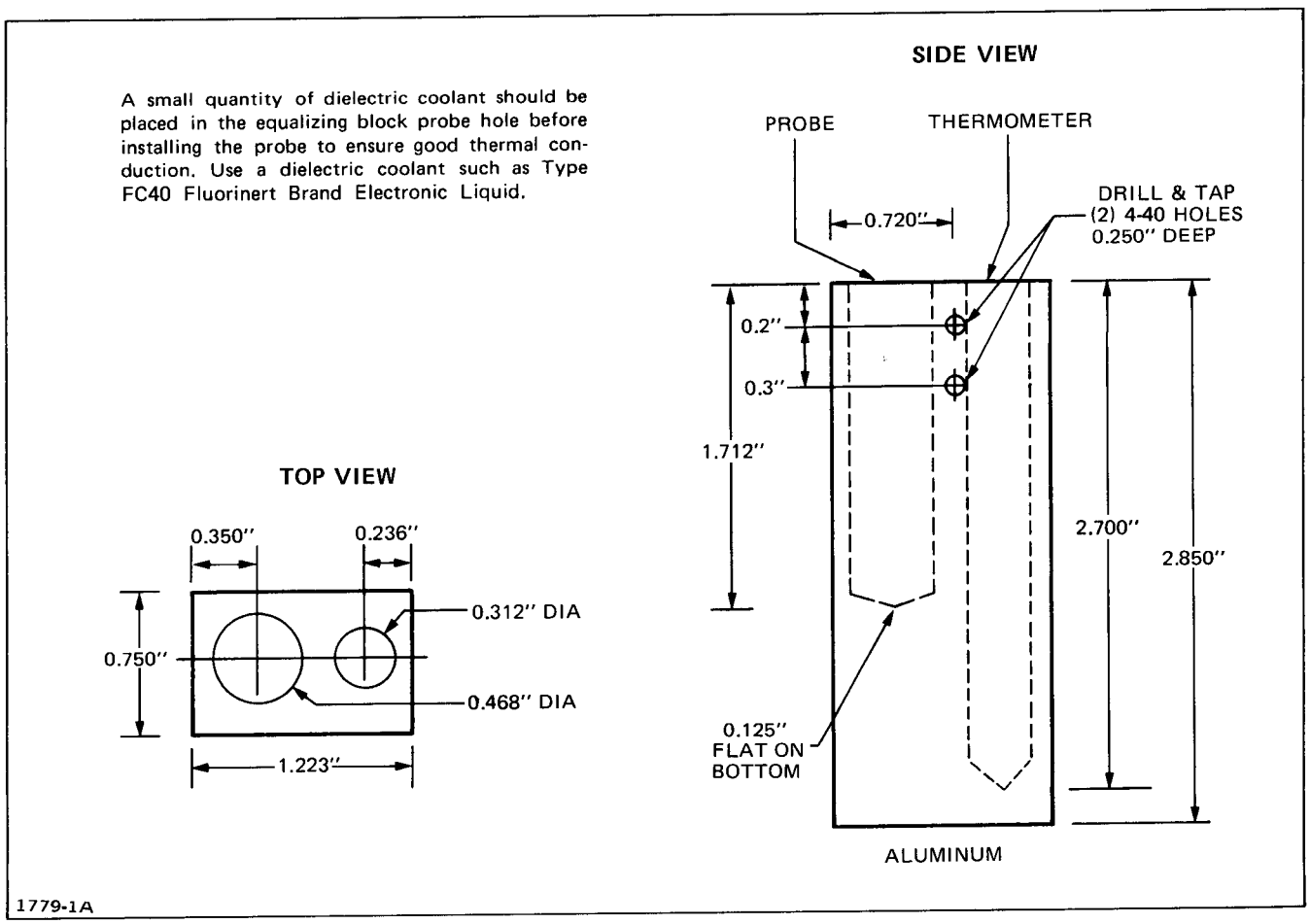

Fig. 3-2. Temperature equalizing block.

d. Place thermometer and temperature probe tip in container of water and crushed ice. Allow time for 851 reading to stabilize.

e. CHECK—851 reading for thermometer reading ±2.0°C.

f. Place thermometer and temperature probe in temperature equalizing block (see Fig. 3-2). Allow time for temperature readings to stabilize.

g. CHECK—851 reading for thermometer readings ±2.0°C.

h. Disconnect test setup.

11. Check LINE V Accuracy

a. Obtain an accurate measure of the power line voltage.

b. Set:

FUNCTION	LINE
DISPLAY	NORM
RANGE	AUTO

c. CHECK—851 reading is within 3% of the power line voltage.

12. Check TRNSN TIME Accuracy

a. Test equipment required:

AC Voltage Calibrator

b. Set:

FUNCTION	THRESHOLD A LO
DISPLAY	NORM
RANGE	AUTO
CHANNEL A SLOPE	POS

c. Set A LO THRESHOLD to −5.000 volts ±0.010 volt.

d. Set FUNCTION to A HI THRESHOLD.

e. Set A HI THRESHOLD to +5.000 volts ±0.010 volt.

f. Set ac voltage calibrator:

Amplitude	7.07107 V rms (20.00 V peak-to-peak)
Frequency	16.66 Hz

g. Connect CHANNEL A probe to ac voltage calibrator HI terminal. Connect calibrator Guard to calibrator LO terminal. Connect CHANNEL A probe ground lead to Calibrator LO terminal.

h. Set FUNCTION to TRNSN TIME.

i. CHECK—851 reading is 10.000 ms (limits, 8.2344 to 11.766).

j. Set CHANNEL A SLOPE to NEG.

k. CHECK—851 reading is 10.000 ms (limits, 8.2344 to 11.766).

l. Set ac voltage calibrator frequency to 16.66 kHz.

m. CHECK—851 reading is 10.00 μs (limits, 8.22 to 11.78).

n. Set CHANNEL A SLOPE to POS.

o. CHECK—851 reading is 10.00 μs (limits, 8.22 to 11.78).

p. Disconnect test setup.

13. Check THRESHOLD Functions

a. Test equipment required:

none

b. Set:

FUNCTION	THRESH C
DISPLAY	NORM
RANGE	AUTO
THRESHOLD Controls (all)	TTL (in detent)

c. CHECK—for 851 reading of +1.400 volts (limits, +1.358 to 1.442 volts).

d. Turn CHANNEL C THRESHOLD clockwise to just out of detent.

e. CHECK—for 851 reading between −30 and −31 volts.

f. Turn CHANNEL C THRESHOLD fully clockwise.

g. CHECK—for 851 reading between +30 and +31 volts.

h. Set 851 FUNCTION to THRESH B.

i. REPEAT—Step 13, parts c through g for Channel B.

j. Set 851 FUNCTION to THRESHOLD A LO.

k. CHECK—for 851 reading of +0.700 volt (limits, 0.693 to 0.707 volt).

l. Turn CHANNEL A LO THRESHOLD clockwise to just out of detent.

m. CHECK—for 851 reading between −30 and −31 volts.

n. Turn CHANNEL A LO THRESHOLD fully clockwise.

o. CHECK—for 851 reading between +30 and +31 volts. Return LO THRESHOLD to TTL (in detent).

p. Set 851 FUNCTION to THRES A HI.

q. CHECK—for 851 reading of +2.100 volts (limits, 2.079 to 2.121 volts).

r. Turn CHANNEL A HI THRESHOLD clockwise just out of detent.

s. CHECK—that LO>HI indicator is lit.

t. CHECK—851 reading for same voltage as in Step 13, part k (0.693 to 0.707 volt).

u. Turn CHANNEL A HI THRESHOLD clockwise until the LO>HI indicator goes out.

v. CHECK—851 reading slightly exceeds that noted in Step 13, part k.

w. CHECK—for 851 reading ⩾+30 volts at fully clockwise position of A HI THRESHOLD control.

x. Turn all THRESHOLD controls to TTL.

y. Set RANGE to MNL.

z. Set 851 FUNCTION to THRESHOLD A LO.

aa. CHECK—for 851 reading of 0.700 volt (limits, 0.693 to 0.707 volt).

ab. Down range manually (set RANGE to DOWN RANGE and release to MNL position).

ac. CHECK—for 851 reading of 0.5 to 0.9 volt.

ad. Down range manually.

ae. CHECK—for 851 reading of 0.68 to 0.72 volt.

af. Down range manually.

ag. CHECK—for 851 reading of 0.693 to 0.707 volt.

14. Check Logic State Indicators

a. Test equipment required:

DC Voltage Calibrator

b. Connect CHANNEL A, B, and C probes to dc voltage calibrator + terminal. Connect all three probe grounds to dc voltage calibrator − (minus) terminal.

c. Set dc voltage calibrator output and 851 THRESHOLD controls as shown in Table 3-10.

d. CHECK—for correct logic indication as shown in Table 3-10.

Table 3-10

LOGIC STATE INDICATIONS

DC Voltage Calibrator	THRESHOLD Settings	A			B		C	
		LO	X	HI	LO	HI	LO	HI
−29.480	[a]	OFF	OFF	ON	OFF	ON	OFF	ON
+0.620	TTL	ON	OFF	OFF	ON	OFF	ON	OFF
+0.780	TTL	OFF	ON	OFF	ON	OFF	ON	OFF
+1.309	TTL	OFF	ON	OFF	ON	OFF	ON	OFF
+1.491	TTL	OFF	ON	OFF	OFF	ON	OFF	ON
+1.9985	TTL	OFF	ON	OFF	OFF	ON	OFF	ON
+2.2015	TTL	OFF	OFF	ON	OFF	ON	OFF	ON
+29.480	Clockwise	ON	OFF	OFF	ON	OFF	ON	OFF

[a]Set CH A HI, CH A LO, CH B, and CH C threshold controls fully counterclockwise into detent; then turn clockwise to just out of detent.

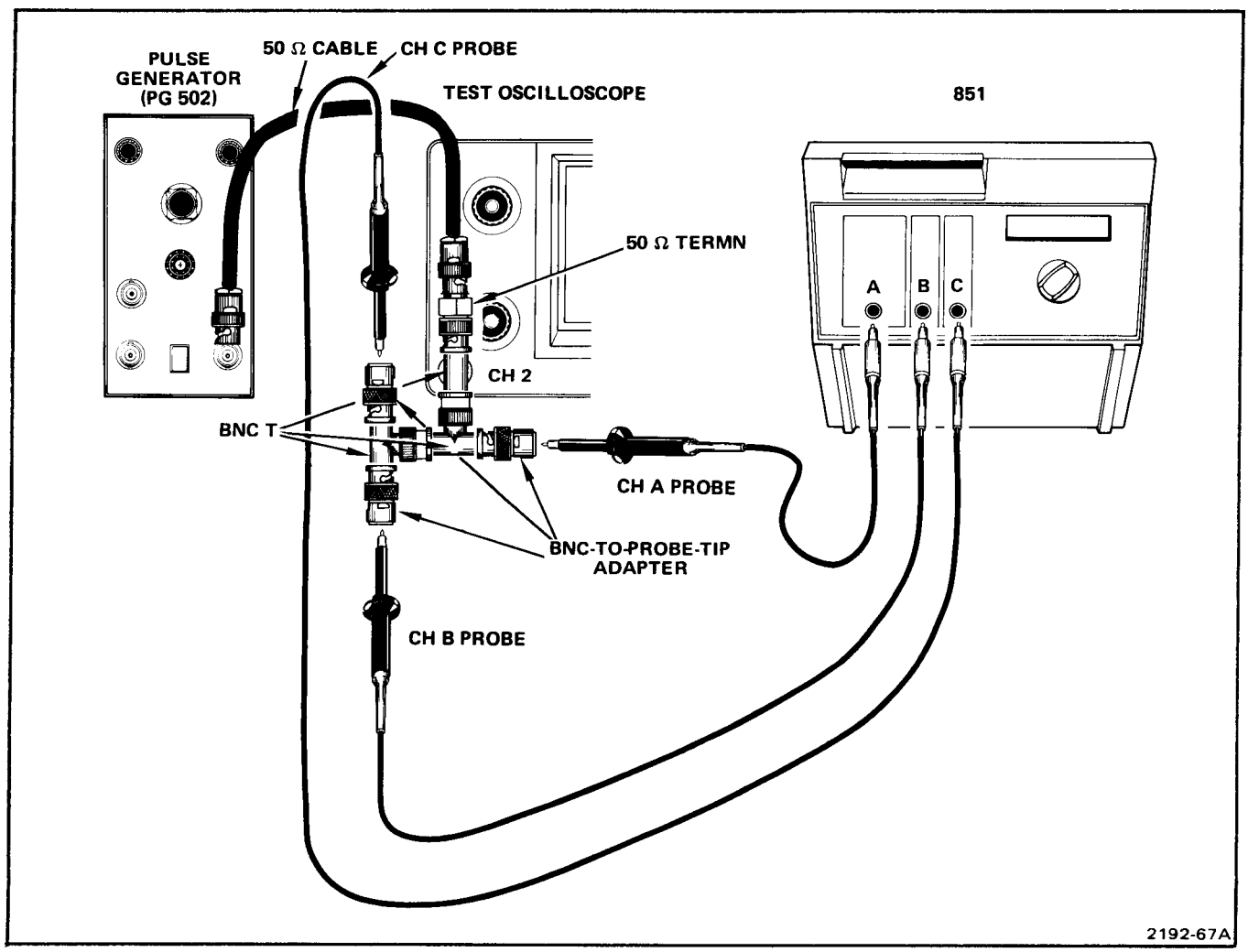

Fig. 3-3. Test equipment and setup for INPUT FILTER check.

15. Check Input Filter

a. Test equipment required:

See Fig. 3-3.

b. Connect test equipment as shown in Fig. 3-3.

c. Set pulse generator:

Period	1 μs
Duration	5 ns
Complement	Norm
Back Term	Button Out

d. Set test oscilloscope:

Horizontal	10 ns/div
Vertical	50 mV/div
Vertical Mode	CH 2

e. Adjust pulse generator Variable Duration and Amplitude controls for the waveform shown in Fig. 3-4(A).

f. Set:

FUNCTION	THRESHOLD A LO
DISPLAY	NORM
RANGE	AUTO
CHANNEL B and C THRESHOLD	just out of detent
INPUT FILTER	ON (just out of detent)

g. Adjust CHANNEL A LO THRESHOLD for an 851 reading of 0.000 V (as close as possible).

h. Turn CHANNEL A HI THRESHOLD clockwise to just out of detent position.

i. CHECK—No logic activity on CHANNEL A Logic Indicators. The A LO Indicator should be lit.

j. Set pulse generator complement to − (minus).

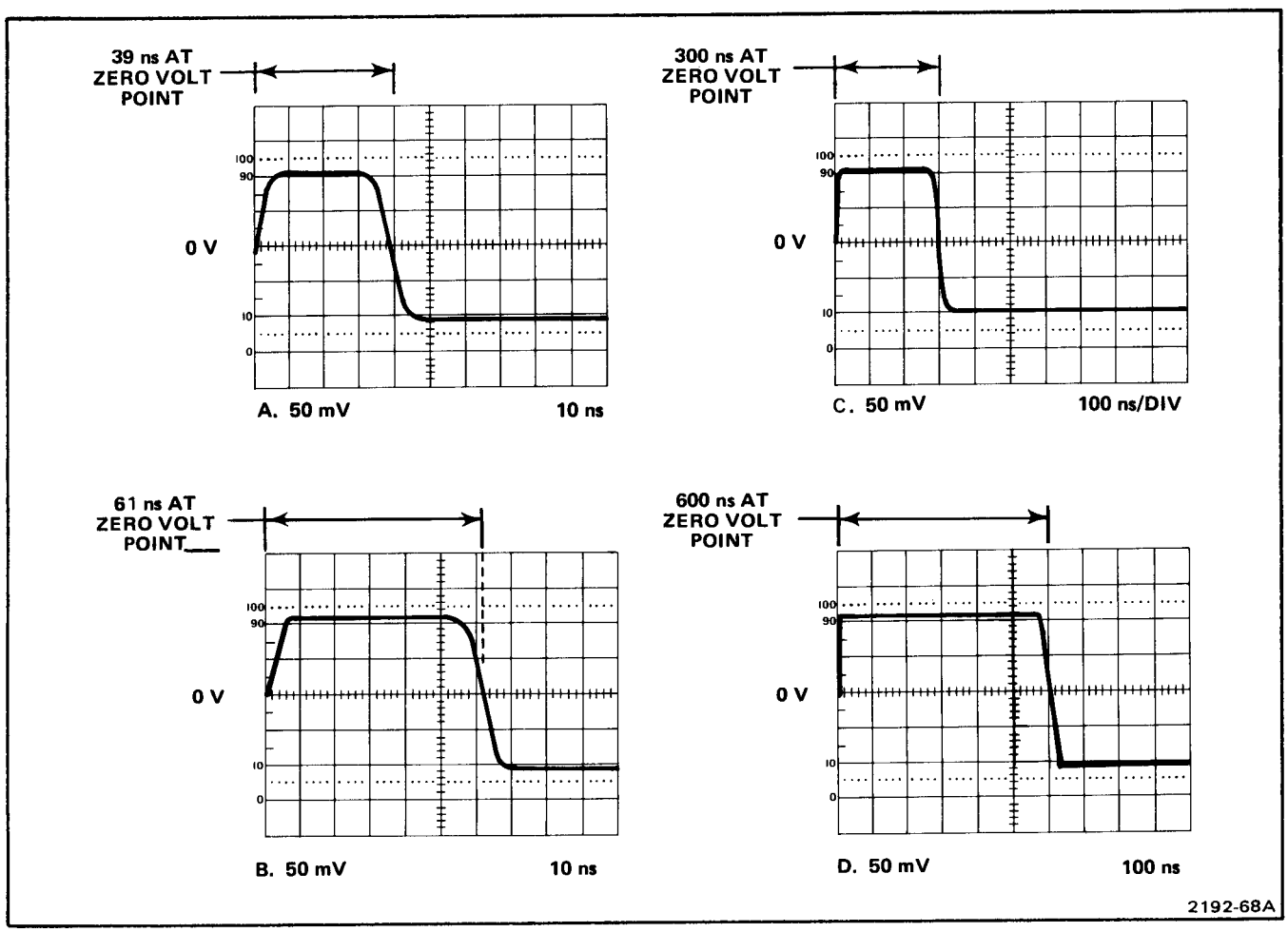

Fig. 3-4. Pulse generator output for INPUT FILTER check.

k. CHECK—No logic activity on CHANNEL A Logic Indicators. The A HI Indicator should be lit.

l. Set pulse generator Duration to 50 ns and adjust Variable Duration for the waveform shown in Fig. 3-4(B).

m. CHECK—Logic activity on CHANNEL A (lights flash).

n. Set pulse generator Complement to NORM.

o. CHECK—Logic activity on CHANNEL A.

p. Set INPUT FILTER to 300 ns.

q. Set test oscilloscope Horizontal to 100 ns/div.

r. Adjust pulse generator Variable Duration for waveform shown in Fig. 3-4(C).

s. CHECK—No logic activity on CHANNEL A. The A LO Indicator should be lit.

t. Set pulse generator Complement to − (minus).

u. CHECK—No logic activity on CHANNEL A. The A HI Indicator should be lit.

v. Set pulse generator Variable Duration for the waveform shown in Fig. 3-4(D).

w. CHECK—Logic activity on CHANNEL A.

x. Set pulse generator Complement to Norm.

y. CHECK—Logic activity on CHANNEL A.

z. Set test oscilloscope Horizontal to 10 ns.

aa. Set pulse generator Duration to 5 ns.

ab. Set:

FUNCTION	THRESH B
CHANNEL A and C THRESHOLD	just out of detent

ac. Adjust CHANNEL B THRESHOLD for an 851 reading of 0.000 V (as close as possible).

ad. Adjust pulse generator Variable Duration for the waveform shown in Fig. 3-4(A).

ae. Repeat Step 15, parts i through y. Make CHECKS on CHANNEL B Logic Indicators instead of CHANNEL A.

af. Set test oscilloscope Horizontal to 10 ns.

ag. Set pulse generator Duration to 5 ns.

ah. Set:

FUNCTION	THRESH C
CHANNEL A and B THRESHOLD	just out of detent

ai. Adjust CHANNEL C THRESHOLD for an 851 reading of 0.000 V (as close as possible).

aj. Adjust pulse generator Variable Duration for the waveform shown in Fig. 3-4(A).

ak. Repeat Step 15, parts i through y. Make CHECKS on CHANNEL C Logic Indicators instead of CHANNEL A.

al. Disconnect test setup.

16. Check % DUTY FACTOR Accuracy

a. Connect test equipment as shown in Fig. 3-5.

b. Set:

FUNCTION	% DUTY FACTOR
DISPLAY	NORM
RANGE	AUTO
A THRESHOLD (both)	0.0 volts
A SLOPE	POS
INPUT FILTER	OFF (detent)

c. Set SG 503 frequency to 10 MHz and amplitude for a 5-volt p-p display on the test oscilloscope.

d. CHECK—851 reading for 50% duty factor (limits, 43 to 57).

e. Set CHANNEL A SLOPE to NEG.

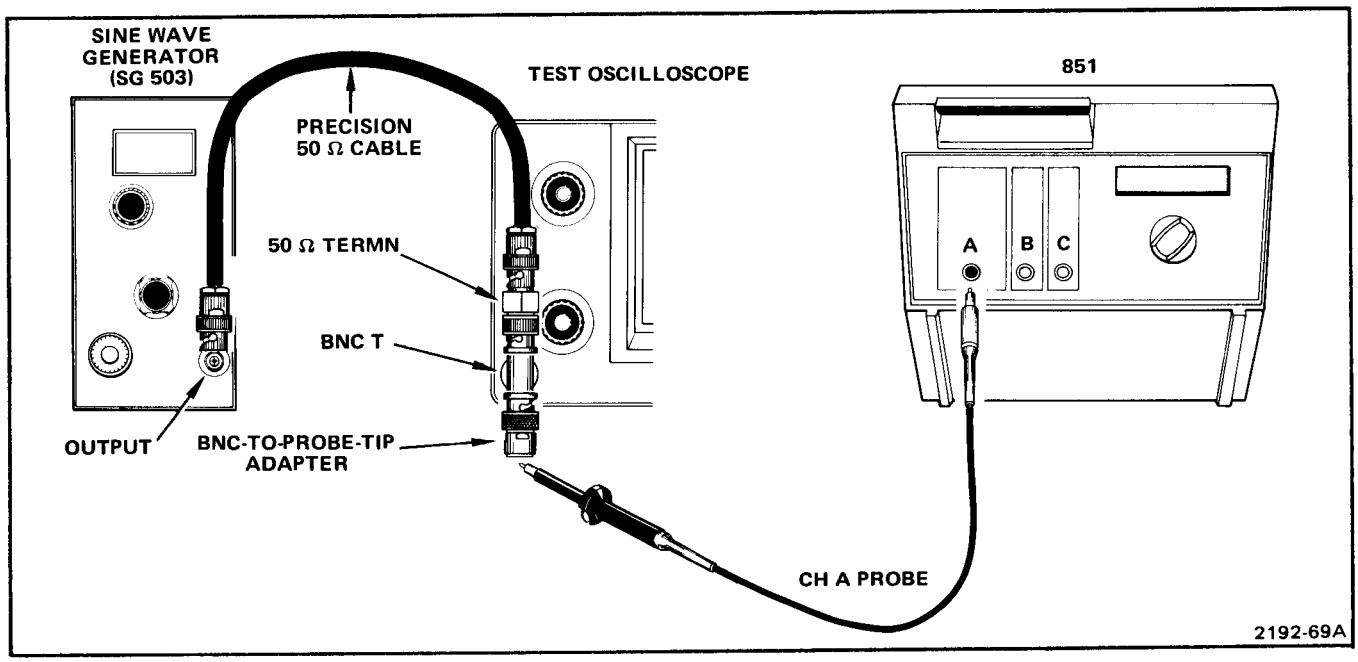

Fig. 3-5. Test equipment and setup for % DUTY FACTOR check.

f. CHECK—851 reading for 50% duty factor (limits, 43 to 57).

g. Set SG 503 frequency to 50 kHz.

h. CHECK—851 reading for 50% duty factor (limits, 48.10 to 51.90).

i. Set CHANNEL A SLOPE to POS.

j. CHECK—851 reading for 50% duty factor (limits, 48.10 to 51.90).

k. Disconnect test setup.

17. Check + And − (minus) PEAK Accuracy (sine wave)

a. Test equipment required:

Leveled Sinewave Generator
AC Voltage Calibrator

b. Set:

FUNCTION	+PEAK
DISPLAY	NORM
RANGE	AUTO
THRESHOLDS (all)	TTL (detent)

c. Connect CHANNEL A and CHANNEL B probes to the 851 CALIBRATOR output terminal (connect the CHANNEL A probe ground clip to the CHANNEL A SLOPE switch toggle handle).

d. Note that there is a period of non-activity on the CHANNEL B logic indicators followed by a period of activity.

e. CHECK—851 reading is the same during both active and inactive indications on CHANNEL B logic indicators. If there is a difference, adjust CHANNEL A INPUT ADJUST until 851 reading is constant regardless of logic activity on CHANNEL B.

f. Connect test equipment as shown in Fig. 3-6.

g. Set generator to 50 kHz.

h. Adjust leveled sinewave generator output amplitude for a 2.5-volt reading on 851.

i. CHECK—851 readings against those in Table 3-11 at the frequencies listed.

j. Set 851 FUNCTION to − (minus) PEAK and repeat Step 17, part i.

k. Connect CHANNEL A probe to ac voltage calibrator HI terminal and probe ground to LO terminal.

l. CHECK—851 readings against those in Table 3-12.

Table 3-11

+PEAK and − (minus) PEAK (HIGH FREQUENCIES)

Leveled Sinewave Generator Frequency	Limits	
	Low	High
50 kHz	2.21	2.79
250 kHz	2.21	2.79
500 kHz	2.21	2.79
1 MHz	2.21	2.79
5 MHz	2.21	2.79
10 MHz	1.86	3.14
15 MHz	1.86	3.14
20 MHz	1.86	3.14
25 MHz	1.85	3.14

m. Set 851 FUNCTION to + PEAK.

n. REPEAT—Step 17, part l.

o. Disconnect test setup.

Table 3-12

+PEAK AND − (minus) PEAK (LOW FREQUENCIES)

Calibrator Volts, rms	Calibrator Frequency	Limits (volts)	
		Low	High
21.2132	40 Hz	27.51	32.49
21.2132	400 Hz	27.51	32.49
21.2132	4 kHz	27.51	32.49
21.2132	40 kHz	27.51	32.49
21.2132	400 kHz	27.51	32.49
21.2132	1 MHz	27.51	32.49
1.76777	1 MHz	2.21	2.79

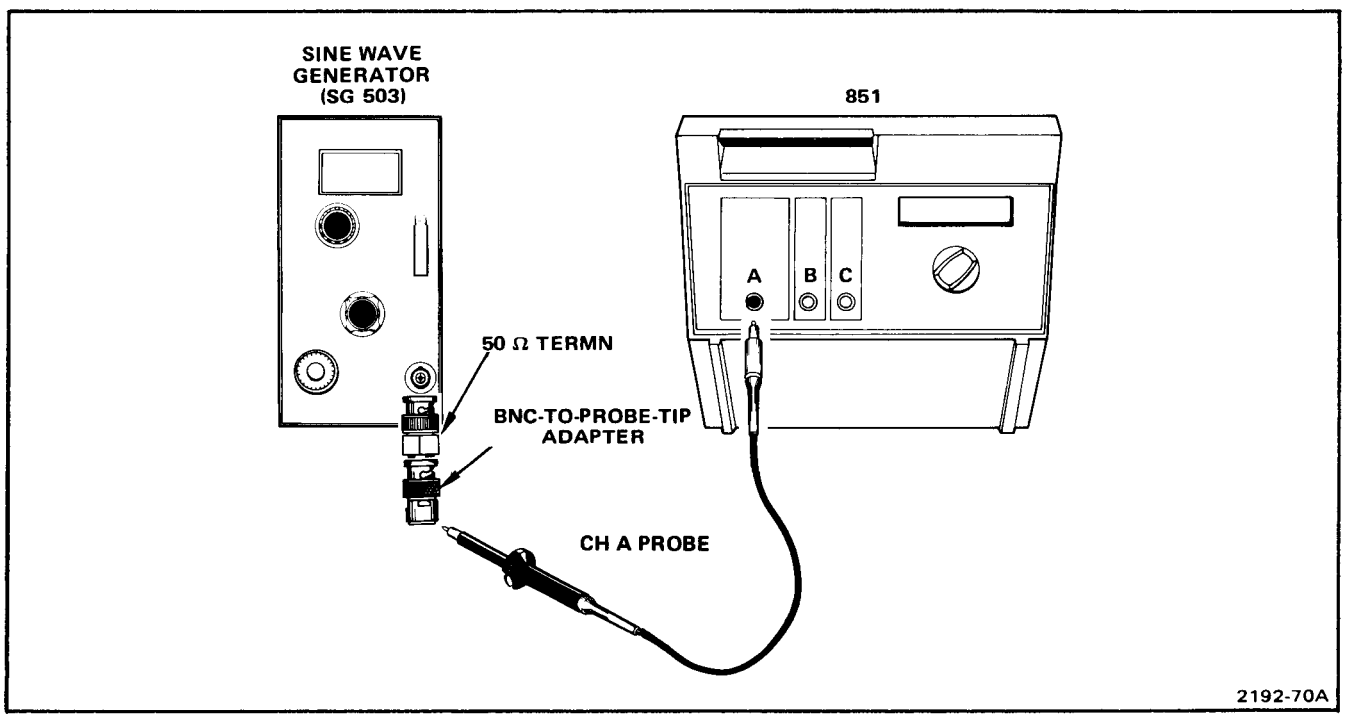

Fig. 3-6. Test equipment setup for high-frequency sinewave PEAK accuracy check.

18. Check + And − (minus) PEAK Accuracy (dc)

a. Test equipment required:

DC Voltage Calibrator

b. Connect CHANNEL A probe to dc voltage calibrator HI. Connect probe ground to dc voltage calibrator LO.

c. Set:

FUNCTION	− PEAK
DISPLAY	NORM
RANGE	AUTO
THRESHOLDS (all)	TTL (detent)

d. CHECK—851 reading according to Table 3-13.

Table 3-13

+ AND − (minus) PEAK (DC)

Calibrator Voltage	Limits (volts)	
	Low	High
+0.0000	−0.09	+0.09
+1.0000	+0.89	+1.11
+5.000	+4.81	+5.19
+10.000	+9.71	+10.29
+28.000	+27.35	+28.65

e. Set 851 FUNCTION to + PEAK.

f. CHECK—851 reading against those in Table 3-13.

g. Disconnect test setup.

19. Check + And − (minus) PEAK Accuracy (40 Hz)

a. Test equipment required:

Pulse Generator
Test Oscilloscope

b. Set:

FUNCTION	PERIOD
DISPLAY	NORM
RANGE	AUTO
THRESHOLDS (all)	TTL (detent)

c. Connect test equipment as shown in Fig. 3-7.

d. Set pulse generator PERIOD to 10 ms, Pulse Duration to .5 ms, and Back Term (back termination) button out.

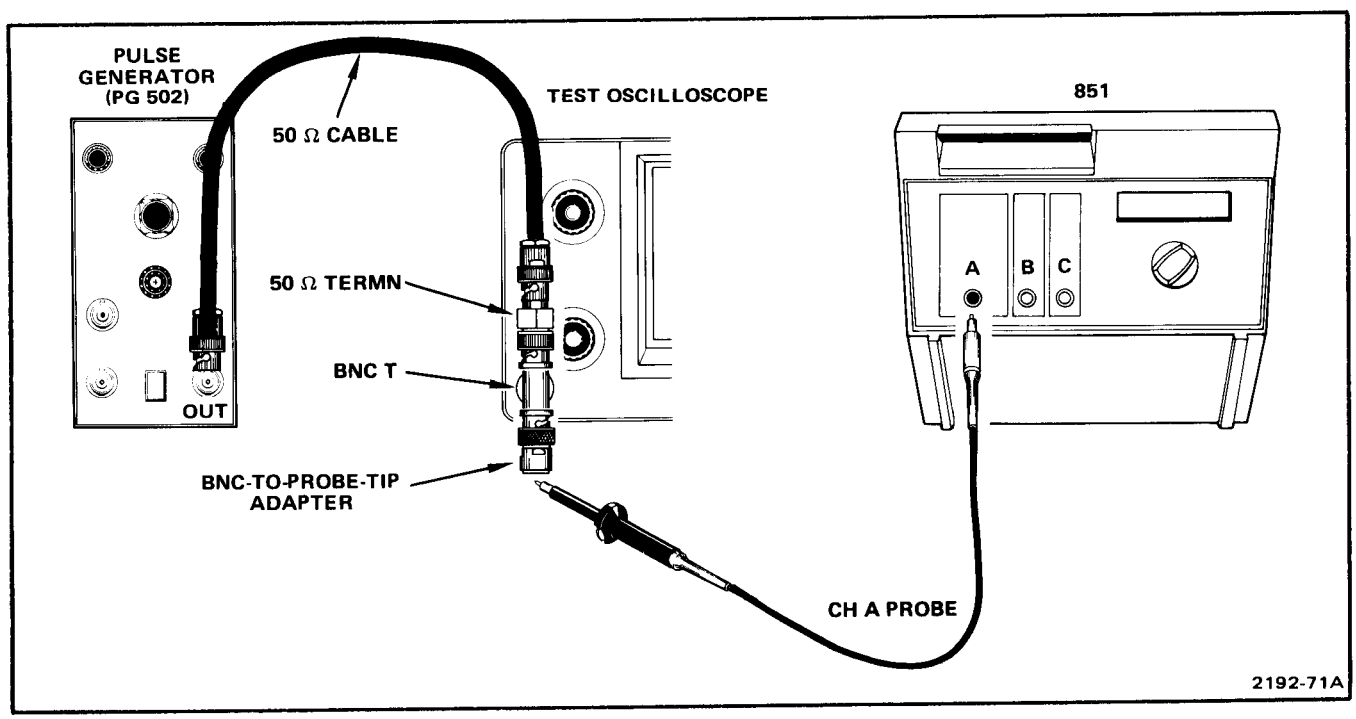

Fig. 3-7. Test equipment setup for + and − PEAK check (40 Hz).

e. Set test oscilloscope Volts/Div to 1 volt; time base to display .5 ms/div and Trigger Slope to +.

f. Adjust pulse generator Output Volts for a positive-going 2.5-volt square wave display on test oscilloscope (set Low Level control for pulse start at zero—ground reference—and set High Level control for a positive amplitude of 2.5 volts).

g. Adjust pulse generator Variable Period for 25 ms reading on 851.

NOTE

When making subsequent adjustments in pulse generator Period, set the Period switch to the indicated range, leaving the Variable Period control at its present setting.

h. Set pulse generator Period switch to 10 μs and Pulse Duration switch to .5 μs.

i. Set test oscilloscope time base to display 1 μs/division.

j. Switch 851 FUNCTION to + PEAK.

k. Adjust pulse generator Output Volts for +2.5 volt reading on 851. Check oscilloscope for signal starting at ground (see Step 19, part f).

l. Set pulse generator Pulse Duration switch to 5 ns and Period switch to 1 μs.

m. Set test oscilloscope Time/Div to 10 ns.

n. Adjust pulse generator Pulse Duration Variable for 2 1/2 horizontal divisions (25 ns) pulse on test oscilloscope.

o. Switch pulse generator Period switch to 10 ms.

p. CHECK—851 reading for +2.5 volts (2.29 to 2.71 V).

q. CHECK—851 readings for values shown in Table 3-14.

Table 3-14

+ AND − (minus) PEAK (40 Hz) CHECK

Pulse Period Setting	851 Reading Limits	
	Low	High
10 ms	2.29 V	2.71 V
1 ms	2.29 V	2.71 V
.1 ms	2.29 V	2.71 V
10 μs	2.29 V	2.71 V
.1 μs	2.29 V	2.71 V

r. Set pulse generator Period switch to 10 μs and Complement button in and Pulse duration to .5 μs.

s. Set test oscilloscope time base to display 1 μs/div and Trigger Slope to − (minus).

t. Adjust pulse generator Output Volts for a negative-going 2.5-volt square wave display on test oscilloscope (set High Level control for pulse to start at zero—ground reference—and Low Level control to provide a negative amplitude of 2.5 volts).

u. Set 851 FUNCTION to − (minus) PEAK.

v. Adjust pulse generator Output Volts for 851 reading of − (minus) 2.5 V.

w. Set pulse generator Pulse Duration switch to 5 ns and Period switch to 1 μs.

x. Set test oscilloscope time base to display 10 ns/div.

y. Adjust pulse generator Pulse Duration Variable for 2 1/2 horizontal divisions wide pulse on test oscilloscope (25 ns).

z. Set pulse generator Period switch to 10 ms.

aa. CHECK—851 reading for − (minus) 2.5 volts (2.29 to 2.71 V) as shown in Table 3-14.

ab. Disconnect test setup.

20. Check CALIBRATOR

a. Test equipment required:

none

b. Set:

FUNCTION	FREQ
DISPLAY	NORM
RANGE	AUTO
THRESHOLDS (all)	TTL (detent)
A SLOPE	POS

c. Connect CHANNEL A probe to 851 CAL OUT connector. (Connect CHANNEL A probe ground clip to the CHANNEL A SLOPE switch toggle handle.)

d. CHECK—851 reading according to Table 3-15.

Table 3-15

CALIBRATOR CHECK

851 FUNCTION Switch	Limits	
	Low	High
FREQ	4.9999	5.0001
WIDTH	98.00	102.0
PERIOD	199.99	200.01
A TRNSN	0.25	0.70
+PEAK V[a]	7.31	8.69
−PEAK V[a]	3.43	4.57
% DUTY FACTOR	46.00	54.00

[a]See Table 1-1 in Specifications, Section 1.

PERFORMANCE CHECK PROCEDURE (PART 2)

NOTE

For the remainder of this performance check you will need a slightly modified TEKTRONIX DD 501. Refer modification to qualified personnel. The instructions for this modification are located in the Maintenance section of this Manual.

21. Check FREQ Accuracy

a. Connect test equipment as stated in Fig. 3-8 directions.

b.Set:

FUNCTION	FREQ
DISPLAY	NORM
RANGE	AUTO
SLOPE (all)	POS
A HI THRESHOLD	Just out of detent
A LO THRESHOLD	See Note 2 below
B THRESHOLD	See Note 3 below
C THRESHOLD	See Note 3 below
INPUT FILTER	OFF (detent)

NOTE

1. In Steps 21 through 31, the 851 Channel A LO Threshold must be set to match the characteristics of the individual DD 501 that is used in the procedure. Threshold controls for Channels B and C must be set initially to +1.5 V. These three controls should be set at this point and not altered until otherwise instructed.

2. To set the A LO THRESHOLD: Connect equipment as described in Fig. 3-8, then temporarily disconnect the time-mark generator cable from the DD 501 input network and connect the 851 Channel A probe to the DD 501 Events Trigger View output connector. Set the 851 FUNCTION switch to +PEAK V. Rotate the DD 501 Events Level control fully ccw and record the voltage displayed on the 851. Rotate the Level control fully cw and record this displayed voltage. Move the 851 Channel A probe to the DD 501 Start Trigger View output connector and record the voltages displayed when the DD 501 Start Level control is rotated fully cw and fully ccw. Add the next-to-lowest and next-to-highest of the four recorded voltages together, divide the result by two and record this value. This is the reference voltage for the 851 Channel A LO Threshold setting.

Disconnect the 851 Channel A probe from the DD 501 and rotate the 851 FUNCTION switch to THRESHOLD A LO. Adjust the 851 CHANNEL A LO THRESHOLD control for a displayed voltage reading equal to the previously recorded reference voltage. Reconnect the time-mark generator cable to the DD 501 input network and the 851 Channel A probe to the DD 501 Start Trigger View connector as shown in Fig. 3-8.

3. To set the 851 Channel B and Channel C threshold controls: Set the 851 FUNCTION switch to THRESH B. Adjust CHANNEL B THRESHOLD for a displayed voltage of +1.5 V. Set the FUNCTION switch to THRESH C and adjust CHANNEL C THRESHOLD for a reading of +1.5 V on the 851 display. Return the FUNCTION switch to FREQ and proceed to Step 21, part c.

4. To reset threshold controls to other voltages: Set the 851 FUNCTION switch to the appropriate position for the threshold control to be adjusted (THRESHOLD A LO, THRESH A HI, THRESH B, or THRESH C). Adjust associated THRESHOLD control for an 851 digital readout corresponding to the desired threshold voltage. Return the 851 FUNCTION switch to the position specified for the procedure step to be performed.

c. Set DD 501 Events Delay Count to 00001.

d. CHECK—Accuracy according to Table 3-16.

Table 3-16

FREQ CHECK

Time Mark Generator	851 Reading		RANGE LED Lit
	Low	High	
1 ms	0.999	1.001	kHz
.1 ms	9.9994	10.001	kHz
50 μs	19.998	20.002	kHz
20 μs	49.997	50.002	kHz
10 μs	99.994	100.01	kHz
5 μs	199.98	200.02	kHz
2 μs	499.97	500.03	kHz
1 μs	999.94 kHz	1.0001	MHz
.5 μs	1.9998	2.0002	MHz
.2 μs	4.9997	5.0003	MHz
.1 μs	9.9994	10.001	MHz
50 ns	19.998	20.002	MHz

22. Check PERIOD Accuracy

a. Connect test equipment as shown in Fig. 3-8.

b. Set:

FUNCTION PERIOD

c. Set DD 501 Events Delay to 00001.

d. CHECK—accuracy according to Table 3-17.

Table 3-17

PERIOD ACCURACY

Time Mark Generator Settings	851 Readings		RANGE LED Lit
	Low	High	
1 s	999.8	1000.2	ms
.5 s	499.96	500.04	ms
.1 s	99.994	100.02	ms
50 ms	49.996	50.004	ms
10 ms	9.9996	10.002	ms
5 ms	4.9996	5.0004	ms
.5 ms	499.96	500.04	μs
.1 ms	99.98	100.02	μs
20 μs	19.99	20.01	μs
5 μs	4.99	5.01	μs
1 μs	0.99	1.01	μs
50 ns	0.04	0.06	μs

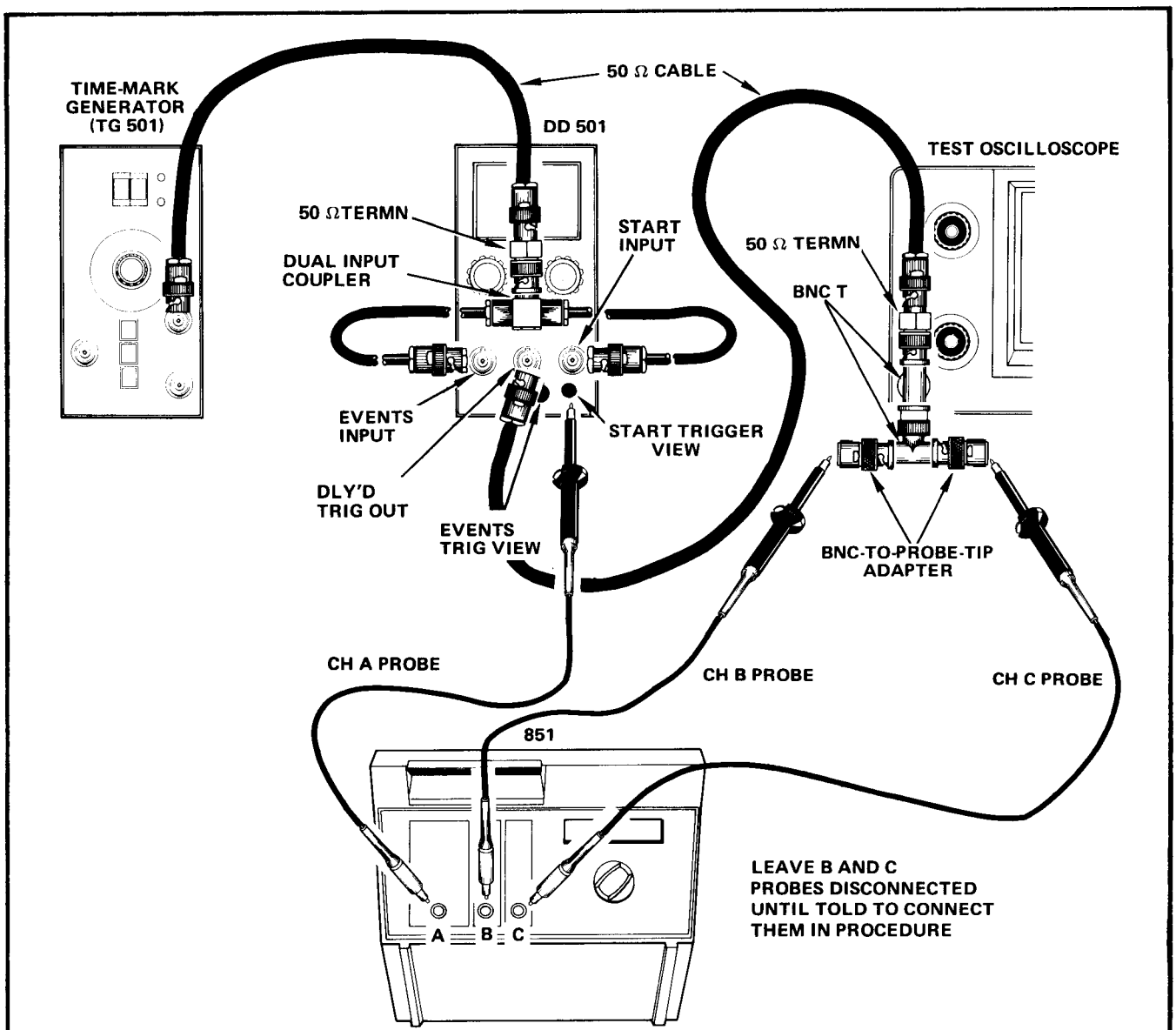

DD 501 INITIAL TRIGGER LEVEL SETUP

1. CONNECT A 10X PROBE TO TEST OSCILLOSCOPE VERTICAL INPUT.
2. SET TIME-MARK GENERATOR FOR 50 ns TIME MARKERS AND CONNECT OUTPUT TO DD 501 AS SHOWN IN ILLUSTRATION.
3. SET TEST OSCILLOSCOPE TIME BASE FOR 50 ns/DIV DISPLAY.
4. SET DD 501 SLOPE TO + AND EVENTS DELAY COUNT TO 00001.
5. CONNECT TEST OSCILLOSCOPE PROBE TIP TO DD 501 EVENTS TRIG VIEW.
6. ADJUST DD 501 EVENTS LEVEL FOR ONE CLEAN PULSE OCCURRING EVERY 50 ns ON THE TEST OSCILLOSCOPE.
7. MOVE TEST OSCILLOSCOPE PROBE TO DD 501 START TRIG VIEW.
8. ADJUST START LEVEL FOR ONE CLEAN PULSE OCCURRING EVERY 50 ns ON THE TEST OSCILLOSCOPE.
9. DISCONNECT PROBE FROM TEST OSCILLOSCOPE INPUT AND CONNECT CABLE ASSEMBLY FROM DD 501 DLY'D TRIG OUT TO OSCILLOSCOPE INPUT AS SHOWN ABOVE.

2192-74A

Fig. 3-8. Test setup for 851 timing checks.

23. Check WIDTH Accuracy

a. Connect test equipment as shown in Fig. 3-8.

b. Set:

FUNCTION	WIDTH
A LO THRESHOLD	+1.5 V (see Step 21, part b, Note 4)

c. Move CHANNEL A probe to DD 501 DLY'D TRIG OUT (connect at bnc-to-probe-tip adapter which is connected to test oscilloscope).

d. Set DD 501 Events Delay Count to 04000.

e. CHECK—accuracy according to Table 3-18.

Table 3-18

WIDTH CHECK

Time Mark Generator Settings	851 Readings		RANGE LED Lit
	Low	High	
.1 μs	399.97	400.03	μs
1 μs	3.9997	4.0003	ms
5 μs	19.998	20.002	ms
20 μs	79.995	80.005	ms
.1 ms	399.97	400.03	ms
.2 ms	799.95	800.05	ms
.5 ms	1999.8	2000.2	ms

d. Move CHANNEL A probe to DD 501 Events Delay Trig View.

e. Set DD 501 Events Delay Count to 9999.

f. CHECK—851 readout is counting.

g. CHECK—851 should continue to count and overrange (display will flash). Display continues counting while in overrange condition.

h. Set DISPLAY to SAVE (not into CLEAR TEST).

i. CHECK—851 display stops counting but continues to flash (due to overrange condition).

j. Push DISPLAY to CLEAR TEST and release to SAVE.

k. CHECK—for 00 on 851 display.

l. Set DISPLAY to NORM.

m. CHECK—851 display begins counting again.

24. Check TOTALIZE Accuracy

a. Connect test equipment as shown in Fig. 3-8.

b. Set:

FUNCTION	TOTALIZE

c. Set time mark generator for 0.1 ms time markers.

25. Check FREQ RATIO A/C Accuracy

a. Connect test equipment as shown in Fig. 3-8.

b. Set:

FUNCTION	FREQ RATIO A/C

c. Leave CHANNEL A probe connected to DD 501 Events Delay Trig View.

d. Connect CHANNEL C probe to DD 501 Dly'd Trig Out (connect to bnc-to-probe-tip adapter which is connected to test oscilloscope).

e. Leave DD 501 Events Delay Count set to 09999.

f. CHECK—accuracy according to Table 3-19.

Table 3-19

FREQ RATIO A/C ACCURACY CHECK

Time Mark Settings	SLOPE		851 READINGS	
	A	C	Low	High
.1 ms	POS	POS	9999	10001
50 μs	POS	POS	9999	10001
20 μs	NEG	NEG	9999	10001
5 μs	NEG	NEG	9999	10001
50 ns	POS	POS	9999	10001

g. Check that + (GATE OPEN) sign flashes on and off.

h. Push DISPLAY switch to CLEAR TEST position; then return to SAVE position.

i. CHECK—851 should display a reading of 10000 (9999 to 10001).

26. Check A COUNT (B→C) Accuracy

a. Leave test equipment connected as in last step.

b. Set:

FUNCTION	A COUNT (B→C)
CHANNEL A and B SLOPE	POS
CHANNEL C SLOPE	NEG

c. Connect CHANNEL B probe to DD 501 Dly'd Trig Out (through bnc-to-probe-tip adapter at test oscilloscope input).

d. Leave DD 501 Events Delay Count set to 09999.

e. CHECK—accuracy according to Table 3-20.

Table 3-20

A COUNT (B→C) CHECK

Time Mark Generator Settings	851 Reading	
	Low	High
.1 ms	9997	10001
10 μs	9997	10001
1 μs	9997	10001
.1 μs	9997	10001
50 ns	9997	10001

27. Check A TRNSN (B→C) Accuracy

a. Leave test equipment connected as in last step.

b. Set:

FUNCTION	A TRNSN (B→C)

c. Leave DD 501 Events Delay Count set to 09999.

d. CHECK—accuracy according to Table 3-21.

Table 3-21

A TRNSN (B→C) CHECK

Time Mark Generator Settings	851 Reading	
	Low	High
.1 ms	19995	19999
50 ns	19995	19999

28. Check TIME (B→C) Accuracy

a. Leave test equipment connected as in last step.

b. Set:

FUNCTION TIME (B→C)

c. Set DD 501 Events Delay Count to 05000.

d. CHECK—851 readings against those of Table 3-22.

Table 3-22

TIME (B→C) CHECK

Time Mark Generator Settings	851 Readings		RANGE LED Lit
	Low	High	
.5 ms	2499.8	2500.2	ms
.1 ms	499.97	500.03	ms
50 ns	249.98	250.02	μs

29. Check TIME (B·C) Accuracy

a. Leave test equipment connected as in last step.

b. Set:

FUNCTION TIME B·C

c. Set DD 501 Events Delay Count to 04000.

d. CHECK—851 display does not update (no +GATE indication on readout; may or may not flash to indicate overrange).

e. Set CHANNEL C SLOPE to POS.

f. CHECK—851 readings against those in Table 3-23.

Table 3-23

TIME (B·C) CHECK

Time Mark Generator Settings	851 Reading		RANGE LED Lit
	Low	High	
1 μs	3.9997	4.0003	ms
.5 μs	1.9998	2.0002	ms
50 ns	199.98	200.02	μs

NOTE

The following Sensitivity checks (Steps 30 through 32) must be performed in sequence.

30. Check CHANNEL A 14 ns Sensitivity

a. Connect test equipment as shown in Fig. 3-9.

b. Set:

FUNCTION	FREQ
DISPLAY	NORM
RANGE	AUTO
SLOPE (all)	POS
A HI THRESHOLD	Just out of detent
THRESHOLD (all except A HI)	0.0000 Volt (see Step 21, part b, Note 4)

c. Set sine wave generator frequency to 35 MHz and Amplitude for about 5 volts peak-to-peak.

d. Set pulse generator:

Period	Ext Trig
Pulse Duration	5 ns
Complement	Out (Norm)

e. Set test oscilloscope:

Vert Mode	CH 1
Trigger Source	CH 1
Trigger Slope	+
Time/Div	5 ns
CH 1 Volts/Div	50 mV

f. Adjust pulse generator for a test oscilloscope display of 200 mV peak-to-peak centered around zero volts.

g. Adjust pulse generator variable pulse duration control for a pulse duration of 14 ns.

h. CHECK—851 reading should be about 35.0 MHz and should be stable (note reading). An unstable reading or a reading different from 35.0 MHz indicates failure to meet the 14 ns sensitivity specification. Recheck THRESHOLD control settings for a zero reading on display if difficulty is encountered in achieving correct reading.

i. Set CHANNEL A SLOPE to NEG.

j. CHECK—851 reading should be same as noted in Step 30, part h, and should be stable.

k. Set pulse generator complement to the in position (−) and test oscilloscope trigger slope to − (minus).

l. Set CHANNEL A SLOPE to POS.

m. Repeat Step 30, parts g through j.

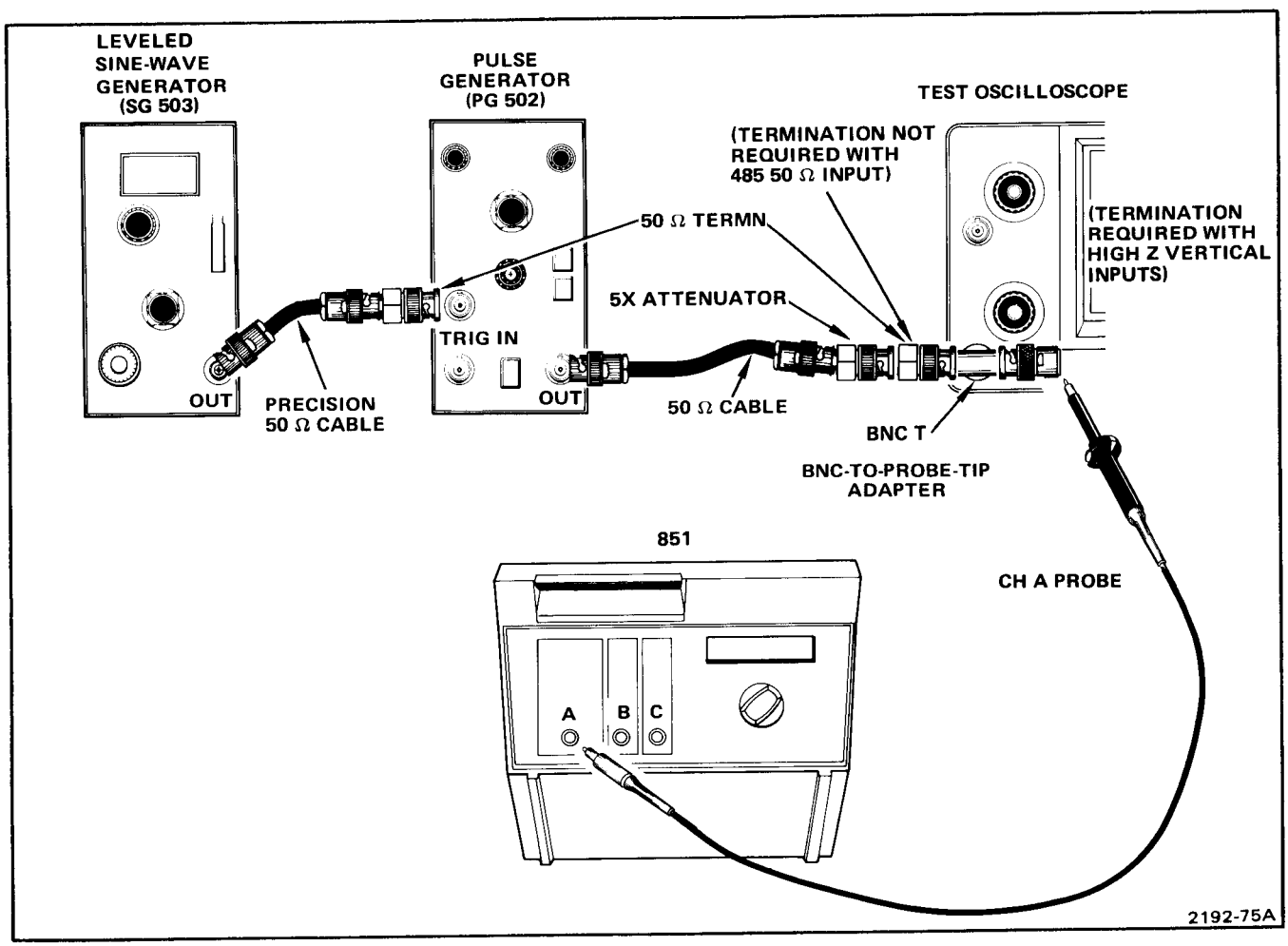

Fig. 3-9. Test equipment setup for CHANNEL A 14 ns sensitivity check.

31. Check CHANNEL C 14 ns Sensitivity

a. Add DD 501 to test setup as shown in Fig. 3-10.

b. Set pulse generator Complement to + (norm) out position and test oscilloscope Trigger Slope to +. Set CHANNEL A SLOPE to POS.

c. Set DD 501:

Events Delay Count	00199
Slopes	+

d. Set A LO THRESHOLD per Step 21, part b, Note 2, and verify that CHANNEL C THRESHOLD is still set to 0.0000 (see Step 30, part b).

e. Set FUNCTION to FREQ RATIO A/C.

f. CHECK—851 reading should be 200 and should be stable.

g. Set pulse generator complement to − (minus) out position.

h. Reading should be the same as in Step 32, part f.

32. Check CHANNEL B 14 ns Sensitivity

a. Set CHANNEL C THRESHOLD to − (minus) 30 volts (see Step 21, part b, Note 4).

b. Verify CHANNEL B THRESHOLD still set to 0.000 volt (see Step 30, part b).

c. Disconnect CHANNEL C probe from test oscilloscope input and connect CHANNEL B probe in its place.

d. Set:

CHANNEL B SLOPE	NEG
CHANNEL C SLOPE	POS
FUNCTION	TIME (B·C)

e. CHECK—851 reading should be about 5.7 μs and should be stable.

f. Set pulse generator Complement button in to − (minus).

g. Set CHANNEL B SLOPE to POS.

h. CHECK—851 reading should be about 5.7 μs and should be stable.

i. Set leveled sine wave generator frequency to 3.5 MHz.

j. CHECK—851 reading should be about 57 μs and should be stable.

k. Set pulse generator Complement button out to the + (Norm) position.

l. Set CHANNEL B SLOPE to NEG.

m. CHECK—851 reading should be about 57 μs and should be stable.

This completes the performance check.

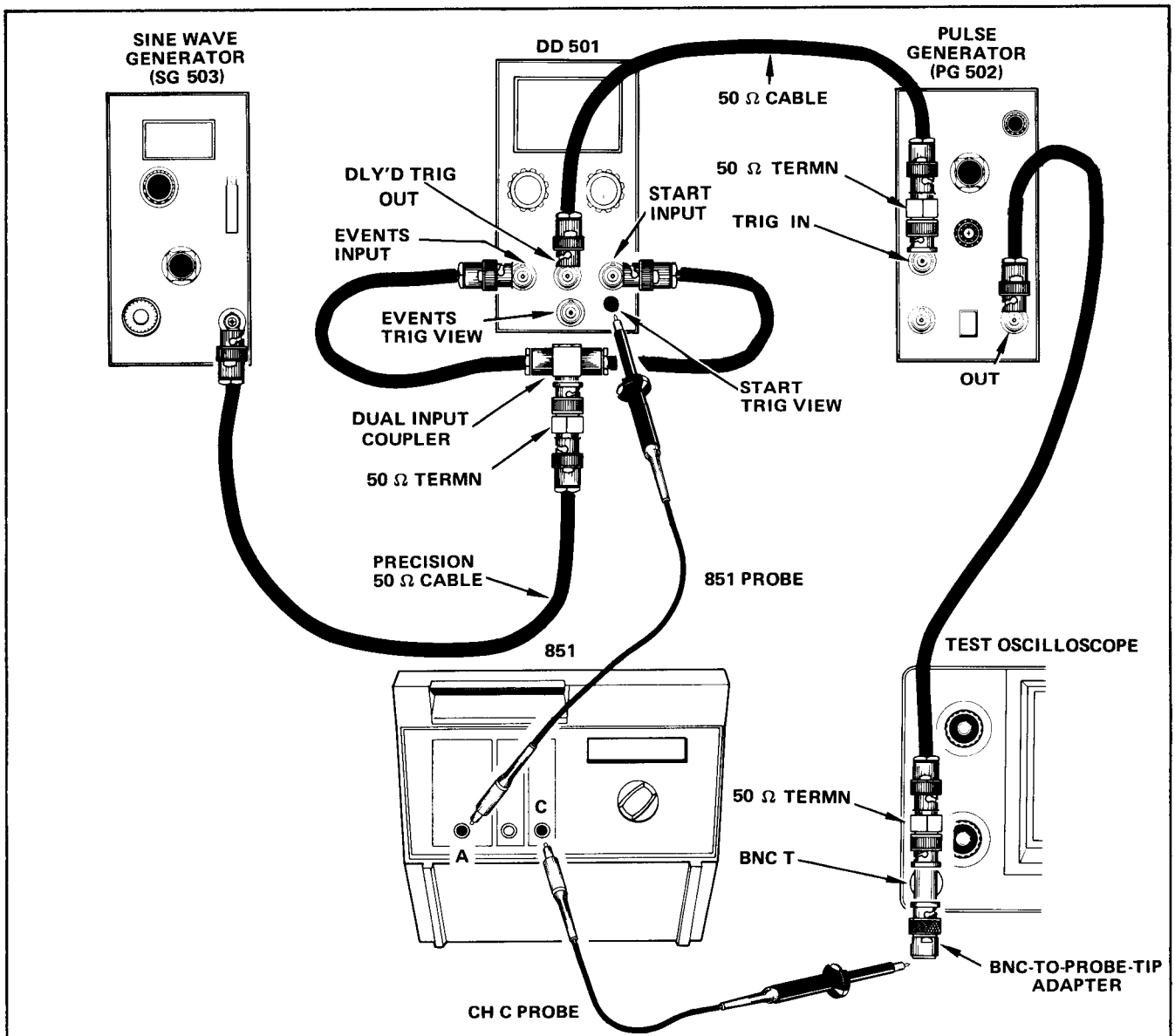

DD 501 TRIGGER LEVEL SETUP

1. DISCONNECT CABLE FROM TEST OSCILLOSCOPE VERTICAL INPUT AND CONNECT A 10X OSCILLOSCOPE PROBE IN ITS PLACE.
2. SET TEST OSCILLOSCOPE TIME BASE FOR A 10 ns/div DISPLAY.
3. SET DD 501 SLOPES TO + AND EVENTS DELAY COUNT TO 00001.
4. CONNECT TEST OSCILLOSCOPE PROBE TO DD 501 EVENTS TRIG VIEW.
5. ADJUST DD 501 EVENTS LEVEL FOR ONE CLEAN PULSE OCCURRING ABOUT EVERY 28.5 ns ON THE TEST OSCILLOSCOPE (SG 503 SET TO 35 MHz).
6. MOVE TEST OSCILLOSCOPE PROBE TO DD 501 START TRIG VIEW.
7. ADJUST START LEVEL FOR ONE CLEAN PULSE OCCURRING ABOUT EVERY 28.5 ns ON THE TEST OSCILLOSCOPE.
8. DISCONNECT PROBE FROM TEST OSCILLOSCOPE VERTICAL INPUT AND RECONNECT CABLE ASSEMBLY AS SHOWN ABOVE.

2192-76A

Fig. 3-10. Test setup for CHANNEL B and C 14 ns sensitivity check.

ADJUSTMENTS

INTRODUCTION

PURPOSE

This is an adjustment procedure only. It does not check all instrument specifications. If you wish to verify all instrument specification after performing an Adjustment Procedure, go to the Performance Check in Section 3 of this manual.

ADJUSTMENT INTERVAL

To ensure maximum measurement accuracy, perform an Adjustment Procedure every 1000 hours of operation or once a year, if used infrequently.

LIMITS AND TOLERANCES

The limits given in this procedure are often design centers to which you should make the adjustment. Do not consider them instrument specifications unless they are also found in the Specification in Section 1 of this manual.

All limits and tolerances given in this procedure are for the 851 under test and do not include possible test equipment error.

ADJUSTMENT LOCATIONS AND TEST POINTS

The adjustment locations illustrations are located in the pullout pages section at the rear of this manual. The adjustment locations page can be folded out so you can refer to it while performing the Adjustment procedure.

TEST EQUIPMENT REQUIRED

Table 4-1 lists the test equipment required to calibrate the 851.

CABINET REMOVAL

Figure 5-1 gives instructions for gaining access to the internal adjustments.

THRESHOLD SETTING

To set threshold controls for a specific voltage reading in the steps of the following procedure: Set the 851 FUNCTION switch to the appropriate position for the threshold control to be adjusted (THRESHOLD A LO, THRESH A HI, THRESH B, or THRESH C). Adjust associated THRESHOLD control for an 851 digital readout corresponding to the desired threshold voltage. Return the 851 FUNCTION switch to the position specified for the procedure step to be performed.

PRELIMINARY PROCEDURE

Remove cabinet per Fig. 5-1; check that 115/230 V Line Voltage Selector switch and fuse are correct for available line voltage source (see page 2-1). Connect 851 power cord to line voltage source and release POWER button to the ON (out) position. If humidity is over 70% or if condensation is present, allow up to 30 minutes warmup time before commencing adjustment procedure. Adjustments should be performed at an ambient temperature between +20°C and +30°C.

Table 4-1

TEST EQUIPMENT REQUIRED

Description	Minimum Specifications	Use	Example
1. Digital Voltmeter	Range, 0 to 15 Vdc; Accuracy, 0.1%.	Power Supply adjust. Ohms adjust. Threshold ranges and levels. Threshold Function accuracy adjust.	1. TEKTRONIX DM 502[a] Digital Multimeter. 2. TEKTRONIX 851 Digital Tester.
2. Pulse Generator	Minimum pulse width at 40 Hz, 5 ns, risetime and falltime, less than 1 ns; amplitude, 5 V p-p into 50 Ω; Duration, 50 ns to 400 ns.	Channel A Input compensation Input filter adjust.	TEKTRONIX PG 502[a] Pulse Generator.
3. Leveled Sine Wave Generator	Flatness, amplitude cannot vary more than 1% from 50 kHz to 20 MHz; amplitude, 5 V p-p into 50 Ω.	Duty factor adjust, Peak adjust.	TEKTRONIX SG 503[a] Sine Wave Generator with included 50 Ω cable.
4. Power Module	Compartments to accommodate TM 500 series test equipment.	To provide operating voltages for Tektronix TM 500 test equipment.	TEKTRONIX TM 504 or TM 506 Power Module, or combinations of TM 501 and TM 503.
5. DC Voltage Calibrator	Voltage, 0 to 2 V; accuracy, 0.01%.	DCV adjust.	Fluke 341A DC Voltage Standard.
6. AC Voltage Calibrator (with amplifier)	Voltage, 1 V to 250 V rms; voltage accuracy, 0.05%; frequency range, 20 Hz to 20 kHz.	ACV adjust.	1. Fluke 5200 AC Voltage Calibrator and 5205A Amplifier. 2. Fluke 520 AC Voltage Calibrator and 5215A Amplifier.
7. Test Oscilloscope (with two included 10X probes)	Bandwidth, 200 MHz; vertical sensitivity, .05 V/div to 2 V/div; sweep speed, 5 ns/div to 50 ns/div.	Channel A Input Compensation Input Filter adjust. Duty Factor accuracy adjust.	1. TEKTRONIX 485[b] portable oscilloscope. 2. TEKTRONIX 7904 oscilloscope with 7A19 and either 7B92A, 7B80 or 7B85 plug-ins.
8. Resistance Standard	Range, 0 Ω to 1 MΩ; accuracy, 0.03%.	Ohms adjust.	ESI Dekabox Model DB 65 Resistance Standard.
9. BNC-to-probe-tip adapter (3 required)	Connectors, BNC male to probe tip.		
10. Termination	Impedance, 50 Ω; connectors, BNC.	Signal termination.	Tektronix Part Number 011-0049-01.

[a]**Requires a TM 500 Series power module.**

[b]**A TEKTRONIX 475 or 475A may be used, but the 485 provides better resolution.**

Table 4-1 (cont)

Description	Minimum Specifications	Use	Example
11. Cable	Impedance, 50 Ω; connectors, BNC.	Signal interconnection.	Tektronix Part Number 012-0057-01.
12. T connector (3 required)	Connectors, 2 BNC female to 1 BNC male.	Signal interconnection.	Tektronix Part Number 103-0030-00.
13. Attenuator (2 required)	Attenuation factor, 10; impedance, 50 Ω connectors, BNC.	Signal attenuation	Tektronix Part Number 011-0059-02.
14. Temperature equalizing block[c]		TEMP °C accuracy.	See Fig. 3-1.
15. Container[c]	Insulated.	Fill with water and crushed ice for Temp °C accuracy.	
16. Thermometer[c]	Range, 0°C to above maximum room temperature; accuracy, with 0.2°C.	Temp °C accuracy.	1. ASTM 67C, Nurnberg Catalog Number 5790.
17. Shorting plug (or bare wire)	5-pin	To short all pins of P100 together.	Tektronix Part Number 198-2258-00 with leads cut and soldered together.

[c]Required only if instrument is to be used with optional temperature probe accessory.

INDEX TO ADJUSTMENT PROCEDURE (SHORT FORM PROCEDURE)

	Page
1. Adjust Power Supplies R1362 (−5 V), R1342 (−14 V)	4-4
2. Adjust 100 MHz Oscillator C1100	4-4
3. Adjust DCV R427	4-5
4. Adjust ACV R388, C182, C185, C192	4-5
5. Adjust Ω R367, R343, R358	4-5
6. Adjust TEMP°C R477, R487	4-6
7. Adjust CHANNEL A LO>HI Indicator R678	4-7
8. Adjust THRESHOLD Ranges and Levels R26, R53, R86, R125, R18, R43, R68, R103, R1192, R672, R675	4-7
9. Adjust CHANNEL A, B, and C input Compensation C12, C62, C112	4-9
10. Adjust PEAK Functions C12, C32, C46	4-9
11. Adjust INPUT FILTER C545, C546, C552, C551, C555, C556, R787	4-10
12. Adjust % DUTY FACTOR R654, C651, P584	4-12
13. CHANNEL B and C Delay Equalization J572, J574, A, B, C, D, E, F, G, H, & J	4-14

ADJUSTMENT PROCEDURE

1. Adjust Power Supplies (R1362, R1342)

a. Test equipment required:

Test Digital Voltmeter (DVM).

b. Set test DVM Range to measure 5 Vdc.

c. Connect Test DVM − (minus) lead to chassis ground test point on Power Supply board (see A16 Power Supply in Adjustment Locations pullout at the rear of this manual for all test points and adjustments in step 1).

d. Connect test DVM + lead to −5 V REF test point.

e. ADJUST—R1362 for − (minus) 5 V on test DVM.

f. Reset test DVM (if necessary) to measure −14 Vdc.

g. Move test DVM − (minus) lead to floating ground test point on Power Supply board.

h. Move test DVM + lead to −14 V test point on Power Supply board.

i. ADJUST—R1342 for −14 V on test DVM.

j. Move test DVM + lead to pin 2 of P1320 on Power Supply board.

k. CHECK—test DVM reading is +4.85 to +5.15 V.

l. Move test DVM + lead to pin 4 of P1320.

m. CHECK—test DVM reading is +13.51 to +14.49 V.

n. Move test DVM −lead to chassis ground test point.

o. Move test DVM +lead to each point shown in Table 4-1 and

CHECK—test DVM readings are within the limits given in Table 4-2.

p. Disconnect test setup.

Table 4-2

POWER SUPPLY TOLERANCES

Power-Supply Connector[a]	Pin #	Limits
TP-5V REF		−4.985 to −5.015 V
P1300	6	−4.98 to −5.02 V
	7	−14.625 to −15.375 V
	8	+14.175 to +15.825 V
	10	+4.85 to +5.15 V
P1410	1	+1.56 to +1.64 V
	2	−3.56 to −3.64 V

[a]**See adjustment locations for test point locations.**

2. Adjust 100 MHz Oscillator (C1100)

a. Test equipment required:

Test Oscilloscope

b. Connect test oscilloscope probe ground clip to chassis ground and probe tip to pin 8 of U1112 (see A9 Counter board in Adjustment Locations pullout page at the rear of this manual for Step 2 adjustments and test points).

c. Set Test Oscilloscope:

Sweep	5 ns
Volts/Div	.5
Trigger controls	stable display

d. ADJUST—C1100 from one extreme to the other. Note the two points in the rotation of C1100 where an abrupt change in the frequency occurs (as noted on test oscilloscope). Set C1100 halfway between the two points just noted.

e. CHECK—period of display waveform is 10 ns (2 divisions).

f. Disconnect test setup.

3. ADJUST DCV (R427)

a. Test equipment required:

DC Voltage Standard

b. Set:

FUNCTION	DCV
DISPLAY	NORM
RANGE	AUTO

c. Connect 851 DMM leads to dc voltage standard output (+ to + and − to −).

d. Set dc voltage standard to 1.9000 V.

e. ADJUST—R427 (on DMM board) for an 851 reading of +1.9000.

NOTE

If R427 adjustment does not provide correct reading, move the 2-pin shorting plug that is installed on either P426 or P344 pins (on DMM board) to the opposite set of pins. This will also affect Step 5, part k adjustment, check for interaction and leave plug on pins (P426 or P344) which give best adjustment for both Step 3, part e and Step 5, part k.

f. Set dc voltage standard to 0.0000 V (or turn power off).

g. Disconnect 851 from dc voltage standard.

4. Adjust ACV (R388, C182, C185, C192)

a. Test equipment required:

AC Voltage Calibrator

b. Set:

FUNCTION	ACV
DISPLAY	NORM
RANGE	AUTO

c. Connect ac voltage calibrator Guard terminal and LO terminal together.

d. Connect 851 DMM leads to ac voltage calibrator (+ lead to HI and −lead to LO).

e. Set ac voltage calibrator to 1 kHz and 1.0000 Vac.

f. ADJUST—R388 (on DMM board) for an 851 reading of 1.0000.

g. Set ac voltage calibrator to 3 kHz and 10.00 Vac.

h. ADJUST—C182 (on IO board) for an 851 reading of 10.000.

i. Set ac voltage calibrator to 1 kHz and 100.00 Vac.

j. ADJUST—C185 (on IO board) for an 851 reading of 100.00.

WARNING

Set ac voltage calibrator output to 0 V when adding and removing amplifier to test setup.

k. Add ac voltage calibrator Amplifier to test setup.

l. Set ac voltage calibrator to 1 kHz and 250.00 Vac.

m. ADJUST—C192 (on IO board) for an 851 reading of 250.00.

n. Repeat Step 4, parts e through m to compensate for possible adjustment interaction.

o. Set ac voltage calibrator output to 0 Vac and disconnect test setup.

5. ADJUST Ω (R367, R343, R358) (Step 5 test points and adjustments all on DMM board)

a. Test equipment required:

Resistance Standard
Test DVM

b. Set:

FUNCTION	Ω
DISPLAY	NORM
RANGE	MNL

c. Connect 851 DMM leads to resistance standard.

d. Set resistance standard to 0.000 Ω.

e. Manually downrange to 2 kΩ range (851 display reads 0.0000 and kΩ RANGE light is lit).

f. Connect test DVM − (minus) lead to the junction of R359D and R364 (see adjustment locations on foldout) and + lead to the junction of R351 and R359C.

g. ADJUST—R367 for a reading of 0.000 V on test DVM.

h. Disconnect test DVM.

i. Set 851 RANGE to AUTO.

j. Set resistance standard to 10.000 kΩ.

k. ADJUST—R343 for an 851 reading of 10.000 with the kΩ RANGE light lit.

NOTE

If R343 does not provide adequate adjustment, check jumper position on P344 or P426 (on DMM board), see NOTE after Step 3, part e.

l. Set resistance standard to 1.0000 MΩ.

m. ADJUST—R358 for an 851 reading of 1.0000 with the MΩ light lit.

n. Disconnect test setup.

NOTE

Perform Step 6 only if optional temperature probe is to be used with the 851 or of the 851 is an Option 1 version.

6. Adjust TEMP °C

a. Test equipment required:

Optional 851 temperature probe
Container of water and crushed ice
Temperature Equalizing Block (see Fig. 3-2)
Thermometer

b. Connect optional Temperature Probe to 851 TEMP °C input.

c. Set:

FUNCTION	TEMP °C
DISPLAY	NORM
RANGE	AUTO

CAUTION

When placing temperature probe in solution, keep the liquid level below the bulge in the probe body (see Fig. 4-1).

d. Place temperature probe tip and reference thermomether in container of water and crushed ice. Keep probe tip and thermometer away from container surfaces since they may be warmer than the water and crushed ice.

e. Allow time for the 851 temperature reading and the thermometer reading to stablize.

f. ADJUST—R477 (on DMM board) TEMP ZERO so 851 reading matches thermometer reading.

g. Move temperature probe and thermometer to temperature equalizing block.

h. Allow time for 851 reading and thermometer reading to stablize.

i. ADJUST—R487 (on DMM board) so 851 reading matches thermometer reading.

j. Repeat Step 6, parts d through i as necessary to compensate for possible adjustment interaction.

k. Disconnect temperature probe.

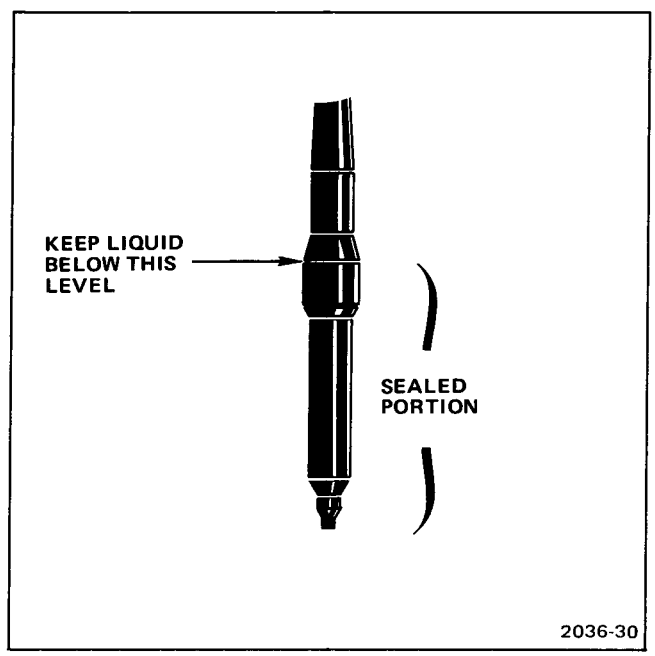

Fig. 4-1. Sealed portion of temperature probe.

7. Adjust CHANNEL A LO>HI Indicator

a. Test equipment required:

none

b. Set:

FUNCTION	FREQ
DISPLAY	NORM
RANGE	AUTO

c. Move two-pin short-circuiting connector P670 up one pin (see Adjustment Locations pullout).

d. ADJUST—R678 (on Comparator board) just to the point where LO>HI indicator lights.

e. Replace two-pin connector P670 to original position.

8. Adjust THRESHOLD Ranges and Levels (R26, R53, R86, R125, R18, R43, R68, R103, R1192, R672, & R675)

(All Step 8 test points and adjustments through part z are on the IO board)

a. Test equipment required:

Test DVM
5-pin short circuit connector or piece of bare wire

b. Set:

FUNCTION	FREQ
DISPLAY	NORM
RANGE	AUTO

c. Place 5-pin short-circuit connector on P100 (or weave bare wire between all the pins of P100).

d. Connect each of the three probe ground clips to its own probe tip.

e. Connect test DVM − (minus) lead to chassis ground (use 851 ground symbol DMM jack) on IO board.

f. Connect test DVM + lead to TP22.

g. ADJUST—R26 for a 0.0 V reading on the test DVM.

h. Move test DVM + lead to TP54.

i. ADJUST—R53 for 0.0 volt on test DMM.

j. Move test DVM + lead to TP82.

k. ADJUST—R86 for 0.0 volt on test DVM.

l. Move test DVM + lead to TP116.

m. ADJUST—R125 for 0.0 volt on test DVM.

n. Move test DVM + lead to pin of P155 (+1.6 V supply) and record the reading.

o. Subtract 1.3 from reading recorded in Step 8, part n, and record the difference.

p. Move test DVM + lead to TP130.

q. ADJUST—R18 for a reading of difference value recorded in Step 8, part o.

r. Move test DVM + lead to TP134.

s. ADJUST—R43 for difference recorded in Step 8, part o.

t. Move test DVM + lead to TP140.

u. ADJUST—R68 for a reading of difference value recorded in Step 8, part o.

v. Move test DVM + lead to TP144.

w. ADJUST—R103 for difference recorded in Step 8, part o.

x. Remove 5-pin short-circuit connector (or wire) from P100.

y. Set:

FUNCTION	THRESH C
THRESHOLD (all)	TTL (detent)

z. Move test DVM + lead to pin 5 of P100.

aa. ADJUST—R1192 (on Counter board) for a test DVM reading of +0.140 V.

ab. CHECK—851 reading is +1.358 to +1.442 V.

ac. Set CHANNEL C THRESHOLD control out of detent.

ad. CHECK—CHANNEL C THRESHOLD control can be adjusted to get an 851 reading of at least +30.00 V (at the extreme clockwise position) and less than −30.00 V (at the extreme counterclockwise out of detent position).

ae. Set FUNCTION to THRESH B.

af. CHECK—851 reading is +1.358 to +1.442 V.

ag. Set CHANNEL B THRESHOLD control between its out of detent extremes.

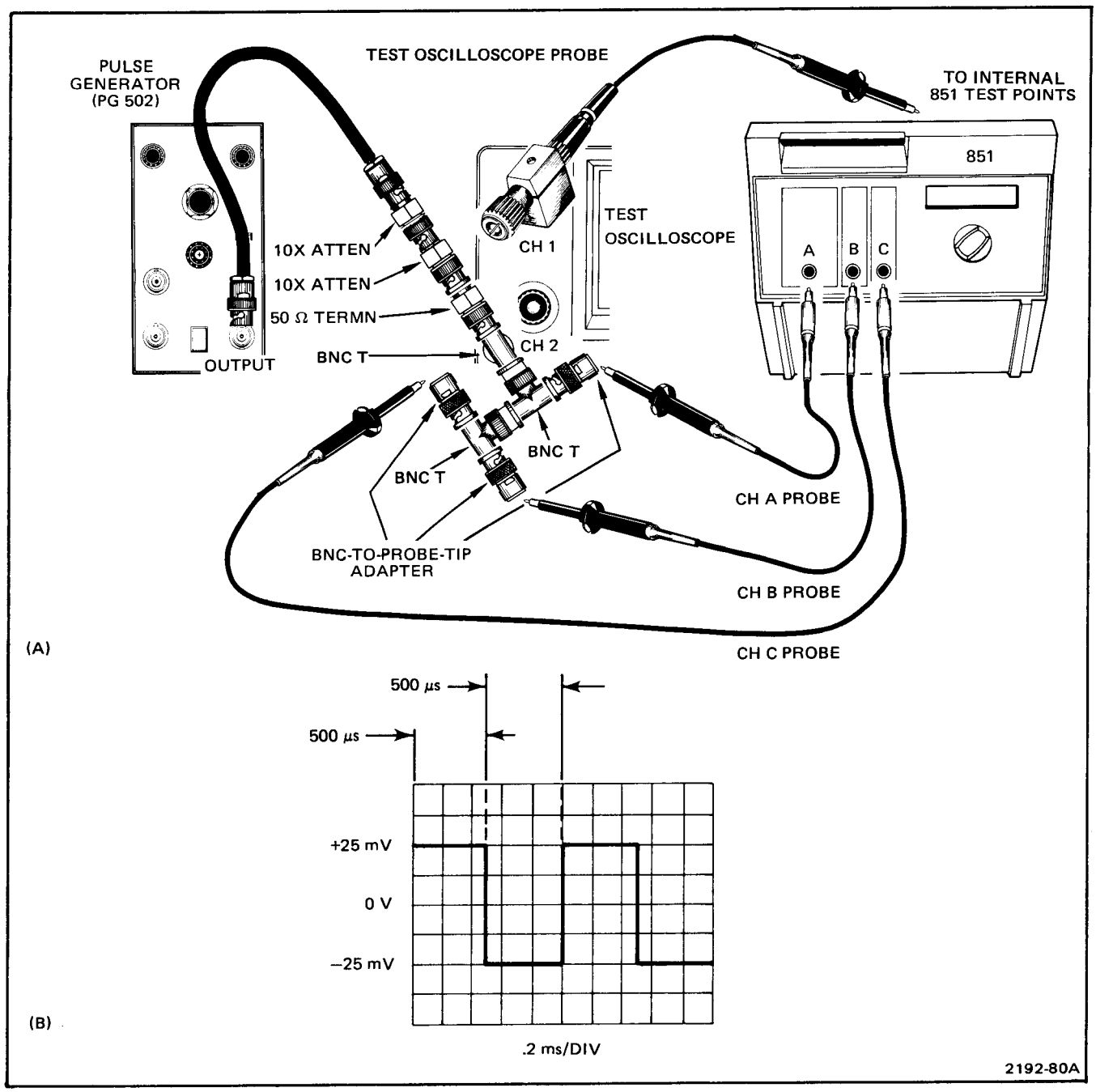

Fig. 4-2. Test equipment setup for Input Compensation Adjustment.

ah. CHECK—CHANNEL B THRESHOLD control can be adjusted to get an 851 reading of at least +30.00 V (at the extreme clockwise position) and less than −30.00 V (at the extreme counterclockwise out of detent position).

ai. Set FUNCTION to THRESHOLD A LO.

aj. Move test DVM + lead to pin 3 of P100.

ak. ADJUST—R672 (on the Comparator board) for a test DVM reading of +0.070 V.

al. CHECK—851 reading is +0.693 to +0.707 V.

am. CHECK—A LO THRESHOLD control can be adjusted for an 851 reading of greater than +30.00 V and less than −30.00 V (see part ah).

an. Set FUNCTION to THRESH A HI.

ao. Move test DVM + lead to pin 2 of P100.

ap. ADJUST—R675 (on Comparator board) for a test DVM reading of +0.210 V.

aq. CHECK—851 reading is +2.079 to +2.121 V.

ar. CHECK—A HI THRESHOLD control can be adjusted for an 851 reading of greater than +30.00 V and less than −30.00 V (see part ah).

as. Disconnect test setup.

9. Adjust CHANNEL A, B, and C Input Compensation (C12, C62, C112)

(All Step 9 test points and adjustments are on IO board.)

a. Test equipment required:

As shown in Fig. 4-2A and a 5-pin shorting plug or piece of bare wire.

b. Set:

FUNCTION	PERIOD
DISPLAY	NORM
RANGE	AUTO

c. Connect test equipment as shown in Fig. 4-2A.

d. Set test oscilloscope:

Vertical	10 mV/Div
Sweep	.2 ms/Div
Vertical Mode	CH 2

e. Set pulse generator for test oscilloscope display shown in Fig. 4-2B (Generator output; Period, 1 ms; amplitude, 5 V p-p).

f. Place 5-pin short-circuit connector on P100 (on IO board).

g. Connect test oscilloscope probe ground clip to 851 DMM ground symbol jack and probe tip to TP130, then set test oscilloscope Vertical Mode to CH 1.

h. ADJUST—C12 for minimum rolloff on displayed square wave.

i. Move test oscilloscope probe tip to TP140.

j. ADJUST—C62 for minimum rolloff on displayed square wave.

k. Move test oscilloscope probe tip to TP144.

l. ADJUST—C112 for minimum rolloff on displayed square wave.

m. Remove short-circuit connector from P100.

n. Disconnect test equipment from the 851.

10. Adjust PEAK Functions (C12, C32, C46)

(All Step 10 adjustments are on IO board.)

a. Test equipment required:

Leveled Sine-Wave Generator

b. Set:

FUNCTION	+PEAK
DISPLAY	NORM
RANGE	AUTO
THRESHOLD (all)	TTL (detent)

c. Connect CHANNEL A and B probes to 851 CAL OUT connector.

d. Note that the CHANNEL B Logic Indicators are active (flashing) for about 8 seconds then indicate a HI for about 2 seconds. Note the 851 reading while the CHANNEL B Logic Indicators indicate a HI.

e. While the CHANNEL B Logic Indicators are active (flashing), the 851 reading should be the same as noted in Step 10, part d. If not,

ADJUST—C12 INPUT ADJUST (near the CHANNEL A INPUT connector) until the 851 reading is constant regardless of the activity on the CHANNEL B Logic Indicators.

NOTE

The procedure given in Step 10, parts d and e adjust the CHANNEL A input to match the CHANNEL A probe. Do not replace CH A probe without re-adjusting C12.

f. Set FUNCTION to −PEAK.

g. CHECK—851 reading should be about −4.00 V when the CHANNEL B Logic Indicators are active.

h. Connect a 50 Ω termination to the output of the leveled sine-wave generator. Then connect a BNC-to-Probe-Tip adapter to the termination.

i. Move the CHANNEL A probe to the BNC-to-Probe-Tip adapter which is connected to the leveled sine-wave generator.

j. Set sine-wave generator to 50 kHz (reference frequency).

k. Set generator amplitude for an 851 reading of −2.5 V.

l. Set FUNCTION to + PEAK.

m. Set generator to 20 MHz.

n. ADJUST—C32 (on IO board) for an 851 reading of +2.5.

o. Set FUNCTION to − PEAK.

p. ADJUST—C46 (on IO board) for an 851 reading of −2.5 V.

q. Disconnect test equipment.

11. Adjust INPUT FILTER (C545, C546, C552, C551, C555, C556, R787)

(Step 11 Adjustments on Comparator board, test points on counter board.)

a. Test equipment required:

See Fig. 4-3.

b. Connect test equipment as shown in Fig. 4-3.

c. Set generator Pulse Period to 1 μs and Pulse Duration to 50 ns.

d. Set test oscilloscope:

Sweep	50 ns/Div
Vertical	.05 V/Div
Vertical Mode	CH 2

e. Set generator Pulse Duration Variable and output amplitude controls for the waveform shown in Fig. 4-4A.

f. Set:

FUNCTION	PERIOD
DISPLAY	NORM
RANGE	AUTO
SLOPE (all)	POS
INPUT FILTER	just out of detent
CHANNEL A HI THRESHOLD	just out of detent
CHANNEL A LO THRESHOLD	0.000 V (as close as possible)
CHANNEL B and C THRESHOLD	about −30.00 V (just out of detent)

g. Connect test oscilloscope probe ground clip to solder lug, and probe tip to TP A on Counter board (see Adjustment Locations pullout page at the rear of this manual). Set test oscilloscope Vertical Mode to Channel 1.

h. ADJUST—C545 (on Comparator board) until the signal on the test oscilloscope starts to break up and there is no logic activity on the CHANNEL A Logic Indicators.

i. Set pulse generator Complement to − (minus).

j. ADJUST—C546 until the signal on the test oscilloscope just starts to break up.

k. Set:

CHANNEL B THRESHOLD	0.000 (as close as possible)
CHANNEL A and C THRESHOLD	about −30.00 V (just out of detent)

l. Move test oscilloscope probe tip to TP B.

m. ADJUST—C552 until the signal on the test oscilloscope starts to break up and there is no logic activity on the CHANNEL B Logic Indicators.

n. Set pulse generator Complement to Norm (+).

o. ADJUST—C551 until the signal on the test oscilloscope starts to break up and there is no logic activity on the CHANNEL B Logic Indicators.

p. Set:

CHANNEL C THRESHOLD	0.000 V (as close as possible)
CHANNEL A and B THRESHOLD	about −30.00 V (just out of detent)

q. Move test oscilloscope probe tip to TP C.

r. ADJUST—C555 until the signal on the test oscilloscope starts to break up and there is no logic activity on the CHANNEL C Logic Indicators.

s. Set pulse generator Complement to − (minus).

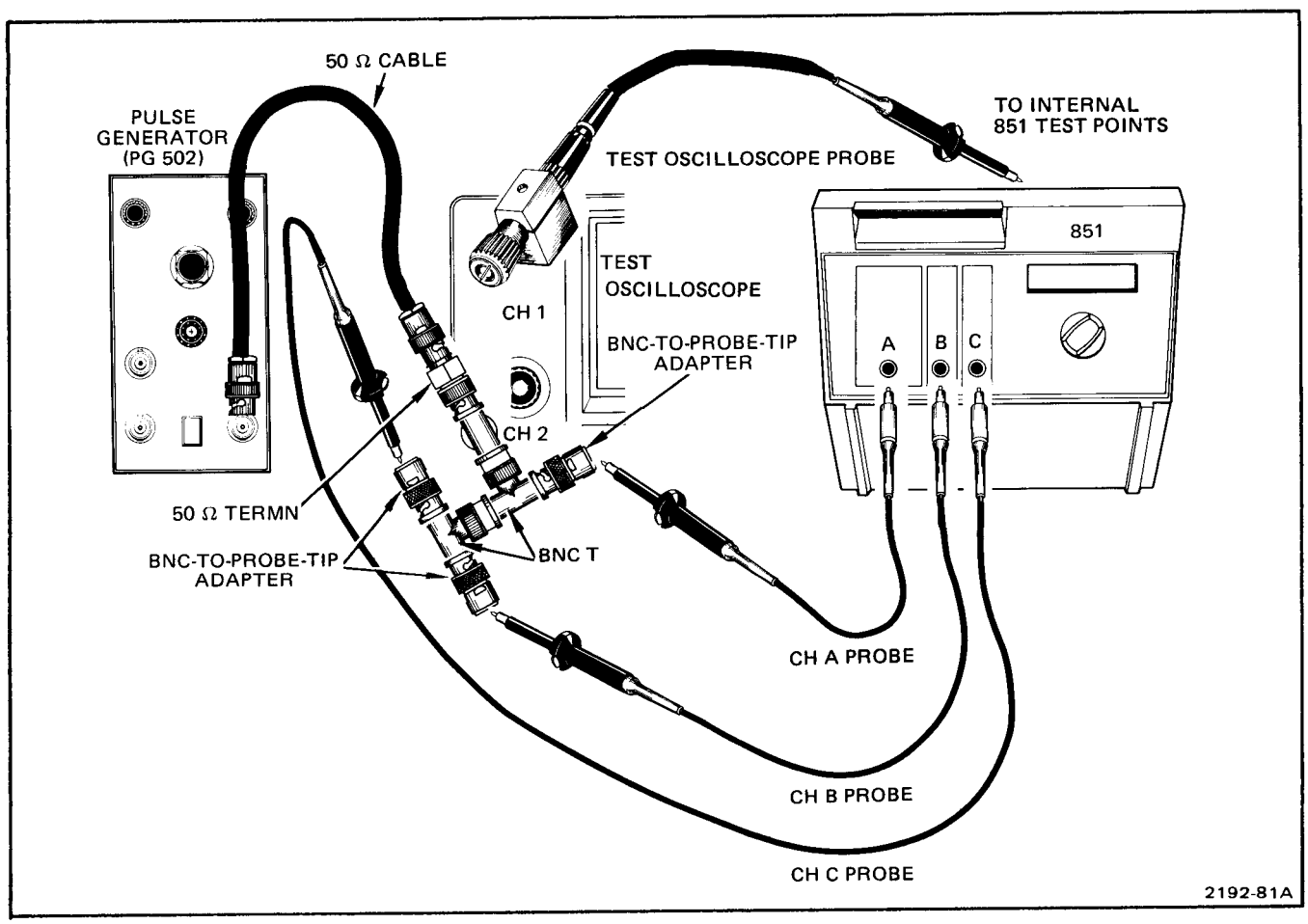

Fig. 4-3. Test equipment setup for INPUT FILTER adjustments.

t. ADJUST—C556 until the signal on the test oscilloscope starts to break up and there is no logic activity on the CHANNEL C Logic Indicators.

u. Set test oscilloscope:

Sweep	50 ns/Div
Vertical Mode	Channel 2

v. Set generator Pulse Duration and Pulse Duration Variable for the waveform shown in Fig. 4-4B.

w. Set test oscilloscope Vertical Mode to Channel 1.

x. Set:

INPUT FILTER	fully clockwise (300 ns)
CHANNEL A THRESHOLD	0.000 V (as close as possible)
CHANNEL B and C THRESHOLD	about −30 V (just out of detent)

y. Move test oscilloscope probe to TP A.

z. ADJUST—R787 until the signal on the test oscilloscope just becomes stable.

aa. Disconnect the test setup.

12. Adjust %DUTY FACTOR (R654, C651, P584)

a. Test equipment required:

see part e

b. Set:

A HI and A LO THRESHOLD	just out of detent
FUNCTION	DUTY FACTOR
DISPLAY	NORM
RANGE	AUTO
INPUT FILTER	OFF (in detent)

c. A HI Logic Indicator should be lit.

d. ADJUST—R654 (on Comparator board) for an 851 reading of 100.00.

e. Set A LO THRESHOLD for zero volts.

f. Connect test equipment as shown in Fig. 4-5.

g. Set leveled sine-wave generator:

Frequency	50 kHz (reference)
Output amplitude	5 V peak-to-peak (on test oscilloscope)

h. Without changing generator amplitude control setting, change generator frequency to 10 MHz.

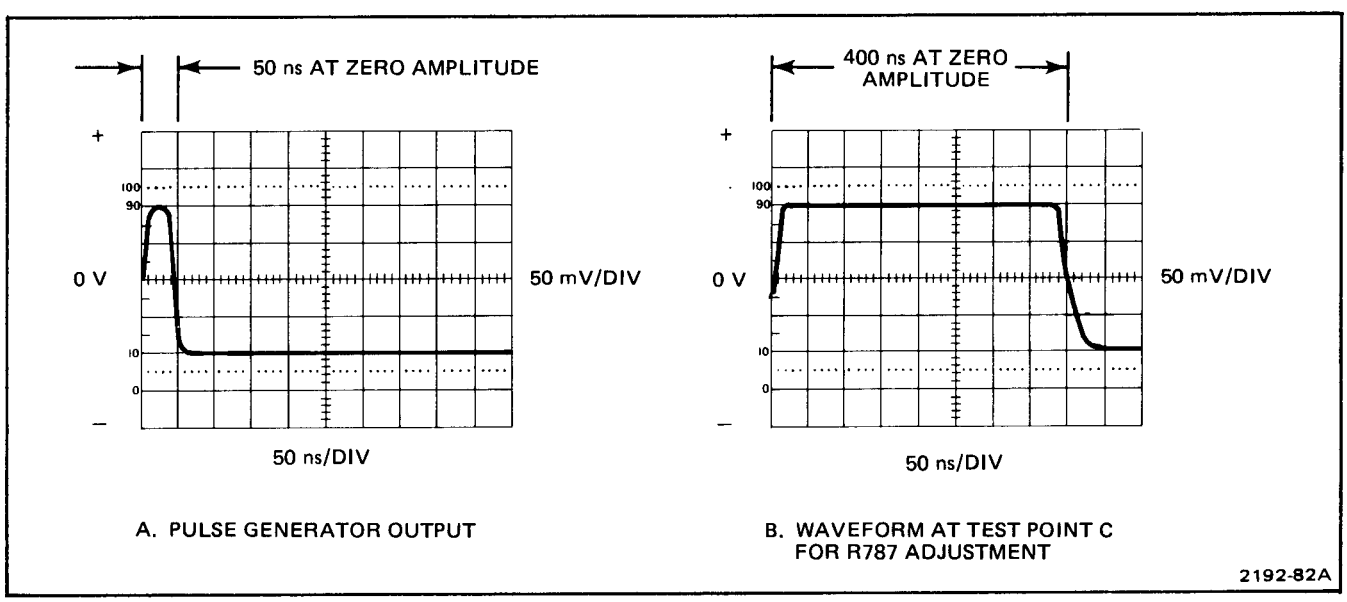

Fig. 4-4. INPUT FILTER adjustment waveforms.

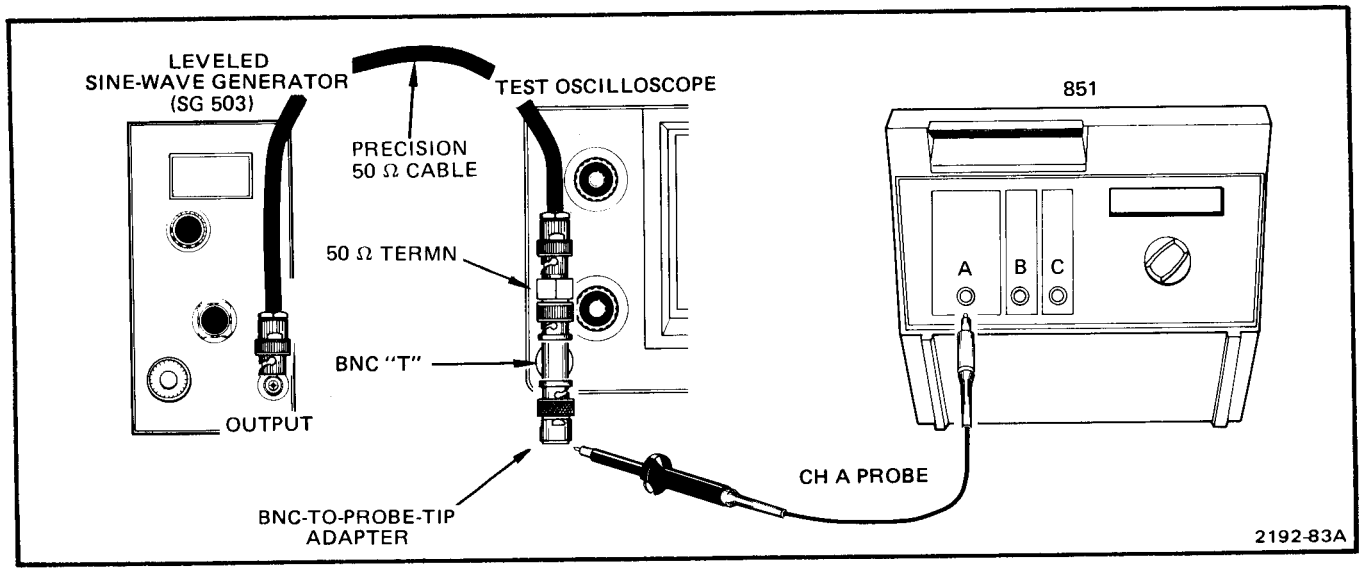

Fig. 4-5. Test equipment setup for DUTY FACTOR adjustments.

i. ADJUST—C651 (on Comparator board) for minimum difference in 851 reading when switching between POS and NEG settings of the A SLOPE switch. 851 reading should be between 48.00 and 52.00 regardless of the setting of the A SLOPE switch.

NOTE

If adjustment of C651 does not result in an 851 reading of between 48.00 and 52.00, move P584 shorting plug (on Comparator board) to short the center P548 pin to the alternate end pin, and repeat all of steps 11 and 12.

13. CHANNEL B and C Delay Equalization (J572, J574, A, B, C, D, E, F, G, H, & J)

NOTE

You should not have to perform this step unless there has been extensive replacement of active devices in CHANNEL B and/or CHANNEL C.

a. Test equipment required:

See Fig. 4-6.

b. Connect test equipment as shown in Fig. 4-6.

c. Set:

FUNCTION	TIME B·C
DISPLAY	NORM
RANGE	AUTO
THRESHOLD (all)	TTL (in detent)
SLOPE (all)	POS

d. Set test oscilloscope:

Sweep	.01 μs
Vertical	2 V/Div
Vertical Mode	Alternate
Trigger Source	Channel 1
Trigger Slope	+

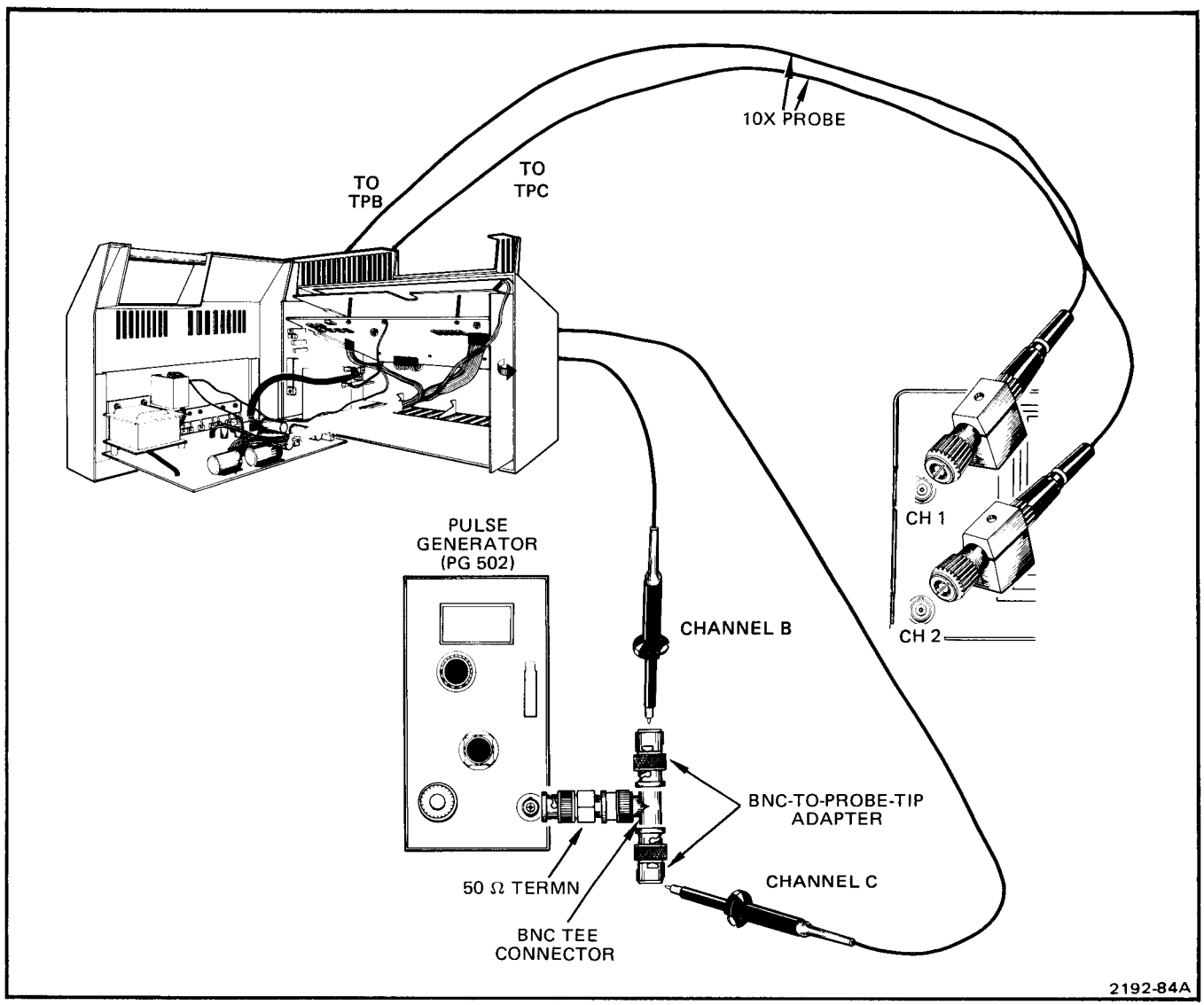

Fig. 4-6. Test equipment setup for CHANNEL B and C delay equalization.

e. Set pulse generator:

Pulse Period	1 μs
Pulse Duration	50 ns
Amplitude (measured with oscilloscope probe tip applied to one bnc-to-probe-tip adapter)	5 V + from ground (TTL signal)

f. Measure time difference between corresponding points on displayed waveforms.

NOTE

If time difference measured in Step 13, part f is less than 5 ns, skip parts g through k.

g. Set connectors on Comparator board as shown in Fig. 4-7A.

h. If time difference between displayed waveforms is now less than 5 ns, skip the remainder of this step.

i. If the test oscilloscope Channel 2 waveform leading edge appears to the left of the Channel 1 waveform, leave connectors positioned as shown in Fig. 4-7A. If the Channel 2 waveform leading edge appears to the right of the Channel 1 waveform, set the connectors as shown in Fig. 4-7B.

j. Move the single-wire connector from pin B to pin C then to pin D, etc, until the delay between the displayed waveforms is less than 5 ns.

k. Disconnect test setup.

This completes the Adjustment Procedure.

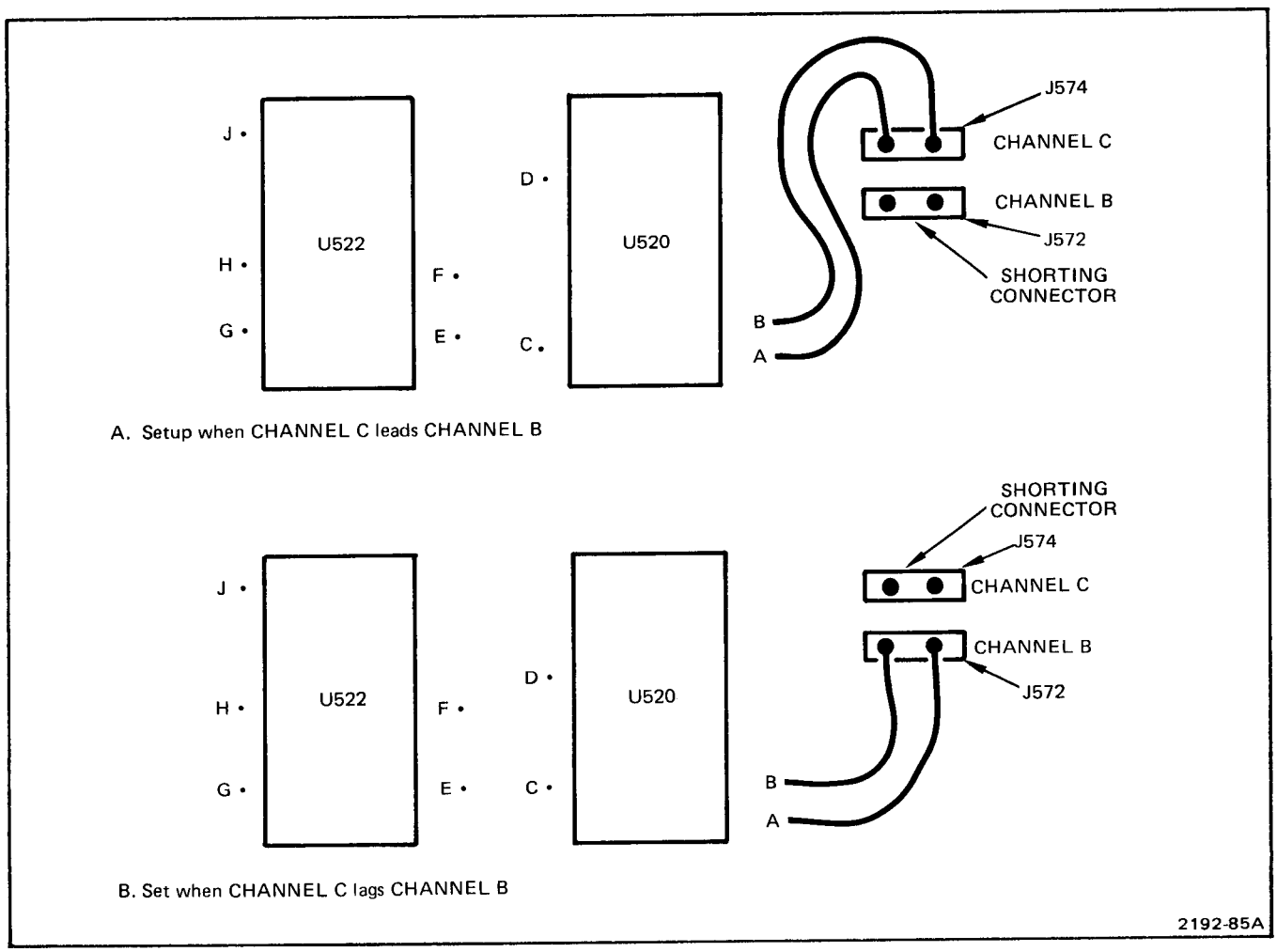

Fig. 4-7. Comparator board delay line taps for equalizing the delay between CHANNEL B and CHANNEL C.

MAINTENANCE

CABINET SEPARATION

WARNING

Dangerous potentials exist at several points throughout this instrument. When the instrument is operated with its covers removed, do not touch exposed components or connections. Voltages may be present on some transistor cases. Disconnect power before cleaning the instrument or replacing parts.

Use the procedure given in Fig. 5-1 to gain access to the interior of the 851.

CHANGING POWER CORD PLUG TYPE

To replace the existing male plug end of the power cord to match special female power line voltage receptacles, cut off the original plug and wire the new plug to conform with local governmental wiring regulations in the area where the instrument is to be used. Power cord wiring color code is listed below.

Conductor	Color	Alternate Color
Ungrounded (Line)	Brown	Black
Grounded (Neutral)	Blue	White
Grounding (Earthing)	Green-Yellow	Green-Yellow

CIRCUIT BOARD IDENTIFICATION

Figure 5-2 shows the internal locations of the circuit boards in the 851.

MAINTENANCE PRECAUTIONS

Static Sensitive Components

This instrument contains semiconductor devices that are susceptible to damage from static discharge. Most semiconductor devices, especially some Bipolar types, and both linear and digital integrated circuit types can be damaged. These parts are especially vulnerable out of circuit, but can be damaged in-circuit in the absence of a low-impedance path such as when a circuit path is interrupted by disconnecting a connector to another board or to chassis-mounted circuitry. Static induced damage is accumulative and may not be apparent for several months.

The probability of damage increases with the level of the static voltage and with the number of times the device is subjected to damaging levels. Levels of static discharge that can cause damage vary with device types and may be as low as 100 volts or less. The use of suction-type solder removers, walking across carpeted floors, and other activities in a servicing or maintenance environment can develop static charges of thousands of volts.

Precautions against static damage include: Disconnect power from instrument when making repairs; use a grounded soldering iron and only wick type desoldering devices; drain body static buildup with a wrist bracelet connected through a 100 kilohm resistor to earth ground; use a grounded non-metallic conductive bench surface such as special anti-static polyethylene sheeting; use an ohmmeter range supplying no more than 10 mA of test current; refrain from sliding semiconductors or boards containing semiconductors across any surface; always store and ship boards or semiconductors only in their original anti-static type shipping materials (avoid non-conductive plastic and styrofoam material); work with static sensitive boards and components where floor covering does not contribute to static charges. When static-sensitive components are out of circuit, minimize handling and keep component leads shorted together (handle by component body, not leads).

Soldering

Most of the components in this instrument are soldered in place. Use a 15-watt soldering iron (see Maintenance Aids) to prevent heat damage to the circuit boards or components. Excessive heat will lift the runs on the circuit board.

The flux in the solder may leave a residue on the circuit board. Be sure to clean off this residue. It can provide a high resistance leakage path which can affect the accuracy of some measurements.

Cleaning

Under normal operating conditions, you will not need to use liquid cleaners inside the instrument. Much of the circuitry in this instrument involves high impedances; therefore any residue (from liquid cleaners or solder flux) must be completely removed. Residues provide high resistance leakage paths which can affect measurement accuracy.

If you must use a liquid cleaner, keep it away from the FUNCTION switch. This switch is lubricated. If you remove the lubrication, the switch must be disassembled to relubricate it. This is an intricate assembly and is difficult to work on without previous experience.

Edge-Board Connectors

These connectors are degraded slightly each time they are disassembled and reassembled. To prevent early failure, avoid repetitive disassembly requiring separation of the edge-board connectors.

Ribbon-Cable Connectors (Multi-Pin Connectors)

These connectors are designed to firmly stay in place. When you remove one, pull on the plastic connector body. Pulling on the wires tightens the grip of the connector.

FUNCTION Switch

Avoid disassembly of the FUNCTION switch if possible. Some switch surfaces must be lubricated and all must be free of contamination (dust or cleaner residue). There are many similar pieces which may be accidentally interchanged. Assembly requires the use of a torque screwdriver. If you must disassemble the FUNCTION switch, carefully follow the instructions given in the Corrective Maintenance portion of this section. For Maintenance Aids refer to the last page of this section.

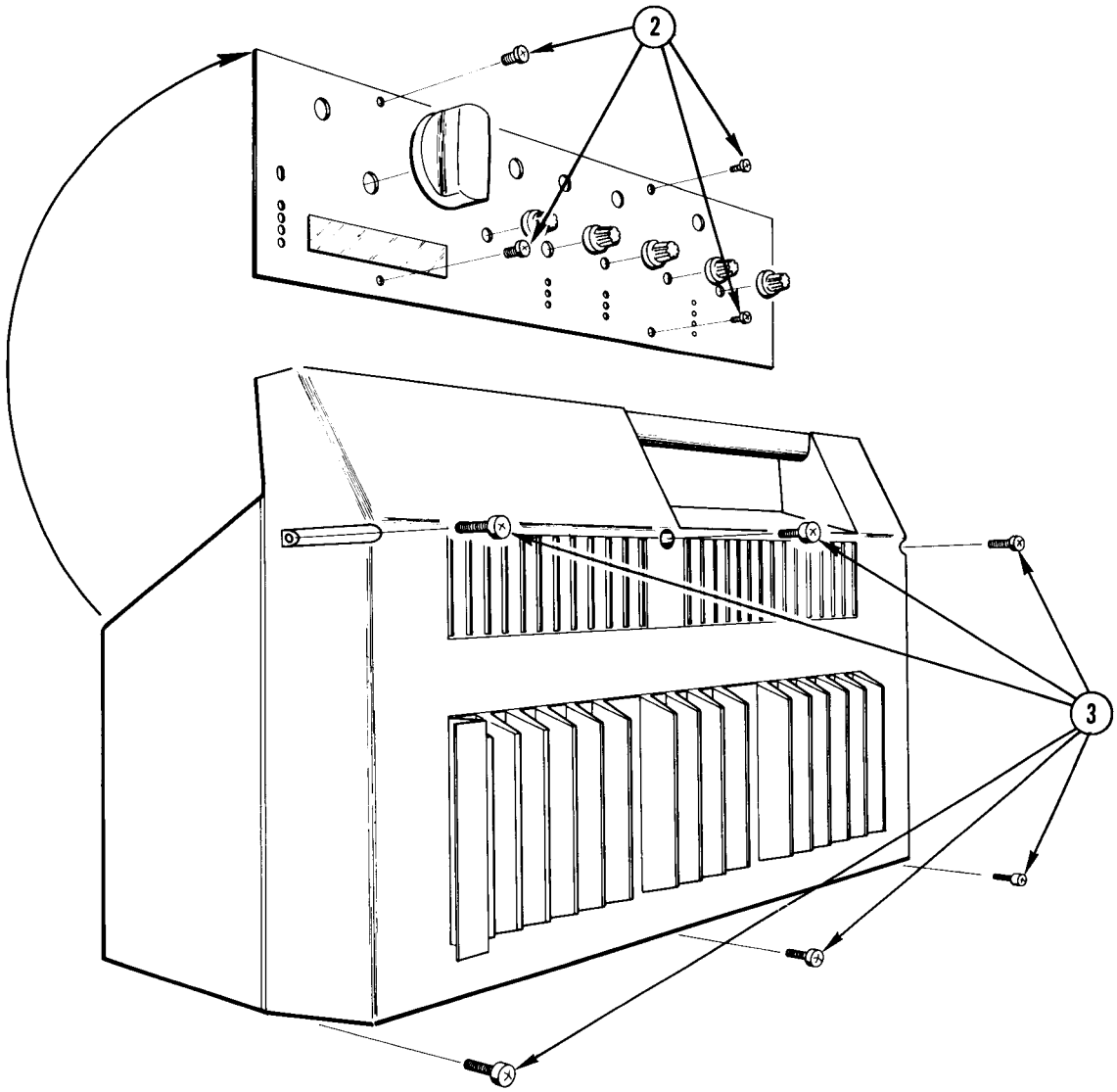

(1) Remove front-panel knobs.

(2) Remove four front-panel screws.

(3) Remove six screws that hold the two cabinet sections together.

(4) Using care not to pull any of the connecting cables loose, separate the two cabinet sections.

WARNING

The power-line switch is mounted on the Power Supply circuit board. Power-line voltages are present on the top of the switch. To avoid a shock hazard, use care not to contact this area when operating the instrument with the cabinet separated.

2192-61A

Fig. 5-1. 851 cabinet separation.

PREVENTIVE MAINTENANCE

Preventive maintenance includes cleaning and visual inspection. To ensure instrument reliability, perform preventive maintenance on a regular basis. A convenient time to perform preventive maintenance is just before performing an adjustment procedure. If you use the 851 in a severe environment, perform a preventive maintenance more often.

CLEANING

Clean the 851 as often as operating conditions require. A buildup of dust and dirt in the instrument acts as an insulating blanket. This can cause overheating and component breakdown. In a high-humidity environment, dust and dirt can provide an electrical conduction path and cause a short circuit.

Exterior

Remove loose dust on the outside of the 851 with a soft cloth or small brush. A brush is useful for cleaning hard to reach areas such as on and around front-panel controls. Clean off any dirt that remains with a soft cloth dampened with a solution of mild detergent and water. Do not use abrasive cleaners.

CAUTION

Avoid the use of liquid cleaners. They may leave residues which can cause high-resistance leakage paths. If using a liquid cleaner becomes necessary, avoid the use of chemical cleaning agents that might damage the plastics used in this instrument. In particular, avoid chemicals that contain benzene, toluene, xylene, acetone or similar solvents. Be sure all traces of liquid have dried before applying power as the liquid can provide a short circuit path.

Interior

To clean the interior, blow off built up dust with dry, low-pressure air. Remove any remaining dust with a soft brush. If you must use a liquid cleaner, use isopropyl alcohol.

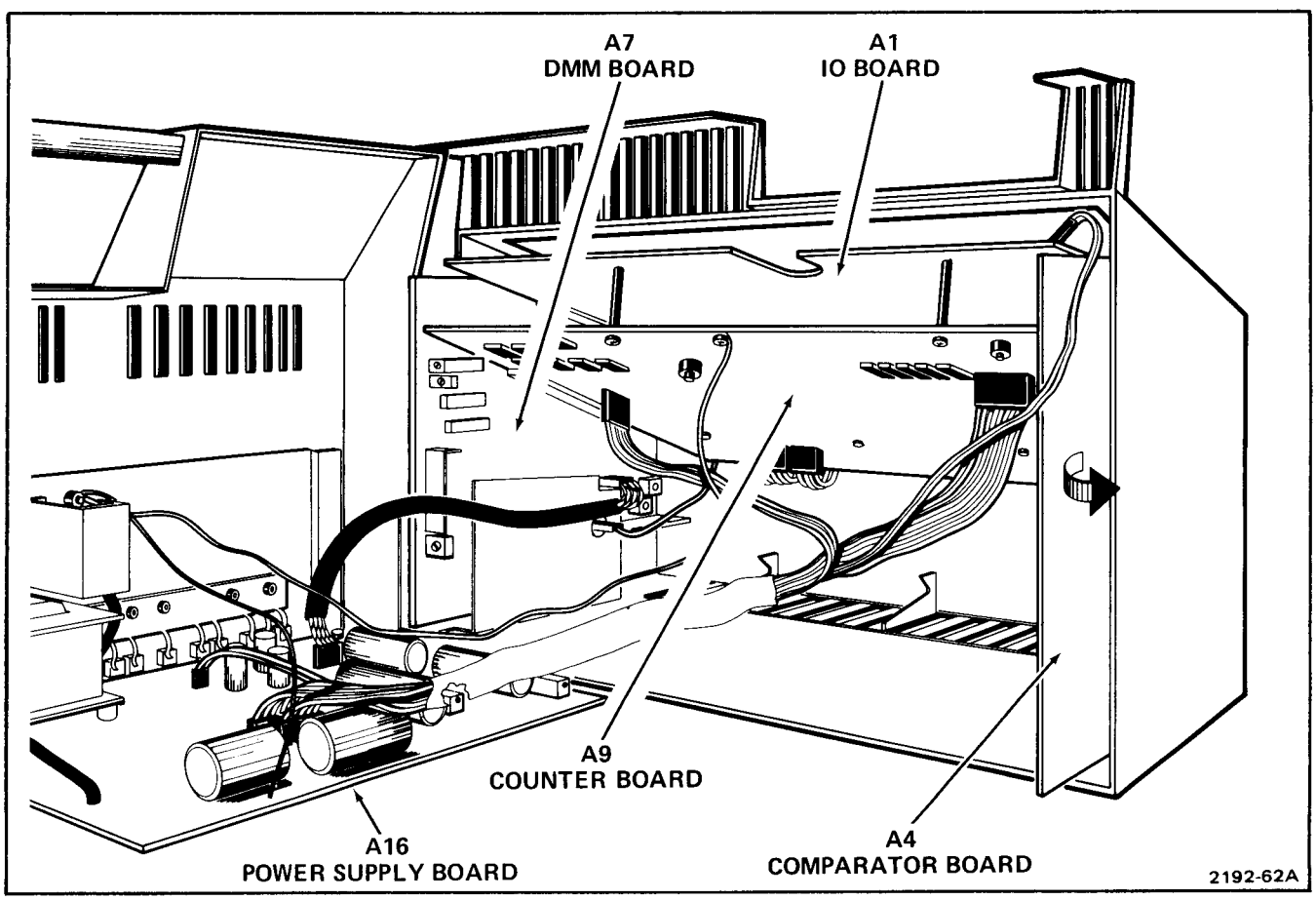

Fig. 5-2. 851 circuit board identification.

VISUAL INSPECTION

Inspect the 851 for such problems as broken connections, poorly seated components, and heat-damaged parts.

Repair any obvious problems. However, take particular care if you find any heat-damaged parts. Overheating usually indicates other circuit problems. To prevent a recurrence of the damage, find and correct the cause of the overheating.

SEMICONDUCTOR CHECKS

We do not recommend periodic checks of the semiconductors in the 851. The best check of semiconductor performance is actual operation in the instrument.

RECALIBRATION

To ensure measurement accuracy, check the calibration of the 851 every 1000 hours of operation or once a year if used infrequently. Also, if you have replaced any components, you should check and readjust, if necessary, the circuit repaired.

DD 501 MODIFICATION (FOR PERFORMANCE CHECK)

To perform part 2 of the Performance Check, you need a slightly modified TEKTRONIX DD 501 digital delay. Use the following instructions and check-out procedure for this modification.

1. Move the wire jumper in the DD 501 as shown in Fig. 5-3.

2. Connect test equipment as shown in Fig. 5-4 (oscilloscope probe to DD 501 Events Trigger View).

3. Set time mark generator for 50 ns time markers.

4. Set test oscilloscope Time/Div to 50 ns.

5. Set DD 501:

Slopes	+
Events Delay Count	00001

6. Adjust DD 501 Events Level control for one clean pulse occurring every 50 ns on test oscilloscope (no multiple triggers).

7. Move test oscilloscope probe to DD 501 Start Trig View.

8. Adjust DD 501 Start Level control for one clean pulse occurring every 50 ns.

9. Move test oscilloscope probe to a 50 Ω termination attached to the DD 501 Dly'd Trig Out connector.

10. Set DD 501 Events Delay Count to 00002.

11. Check test oscilloscope for the display shown in Fig. 5-4B.

12. DD 501 is now ready for part 2 of the Performance Check.

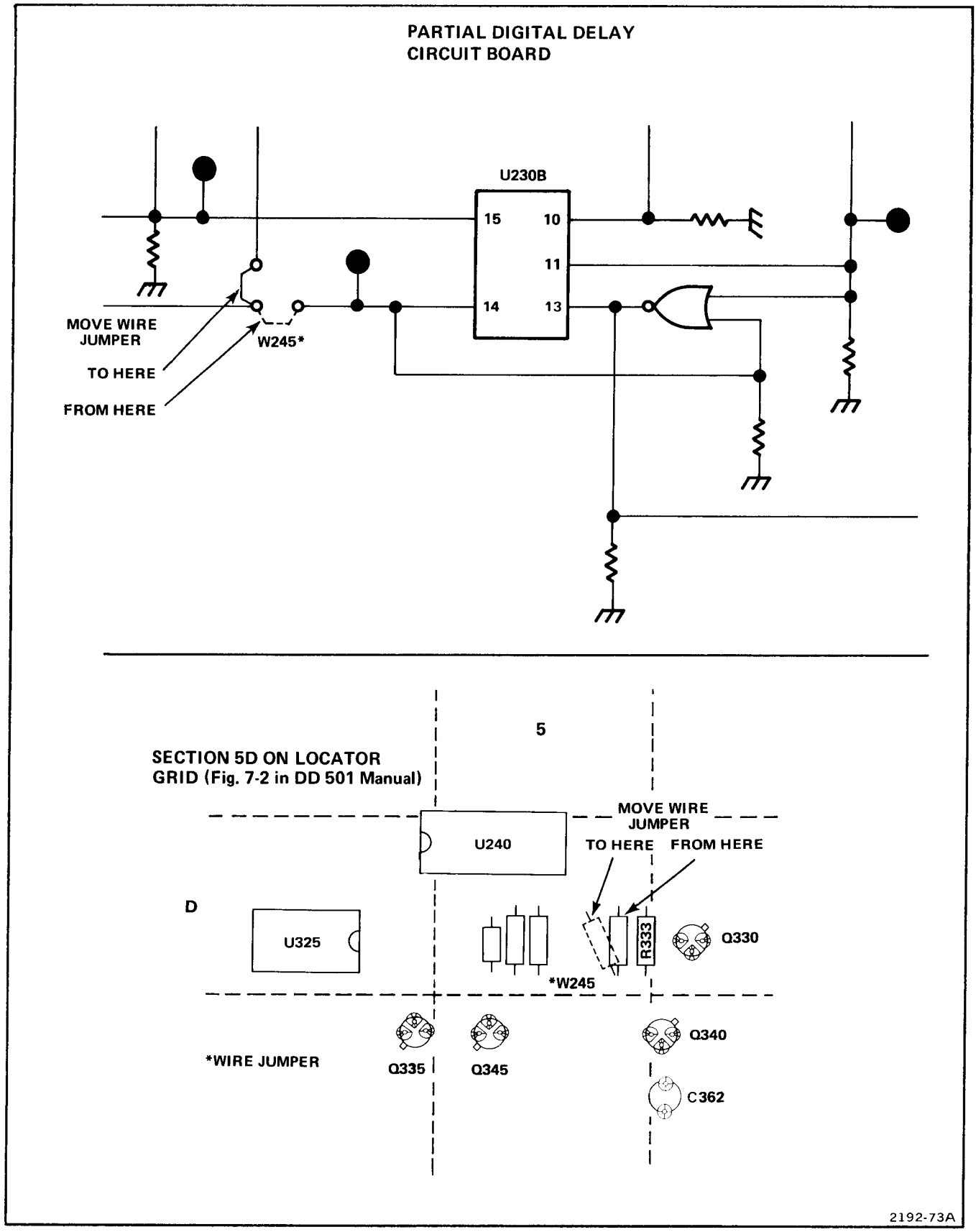

Fig. 5-3. DD501 modification for Performance Check Part 2.

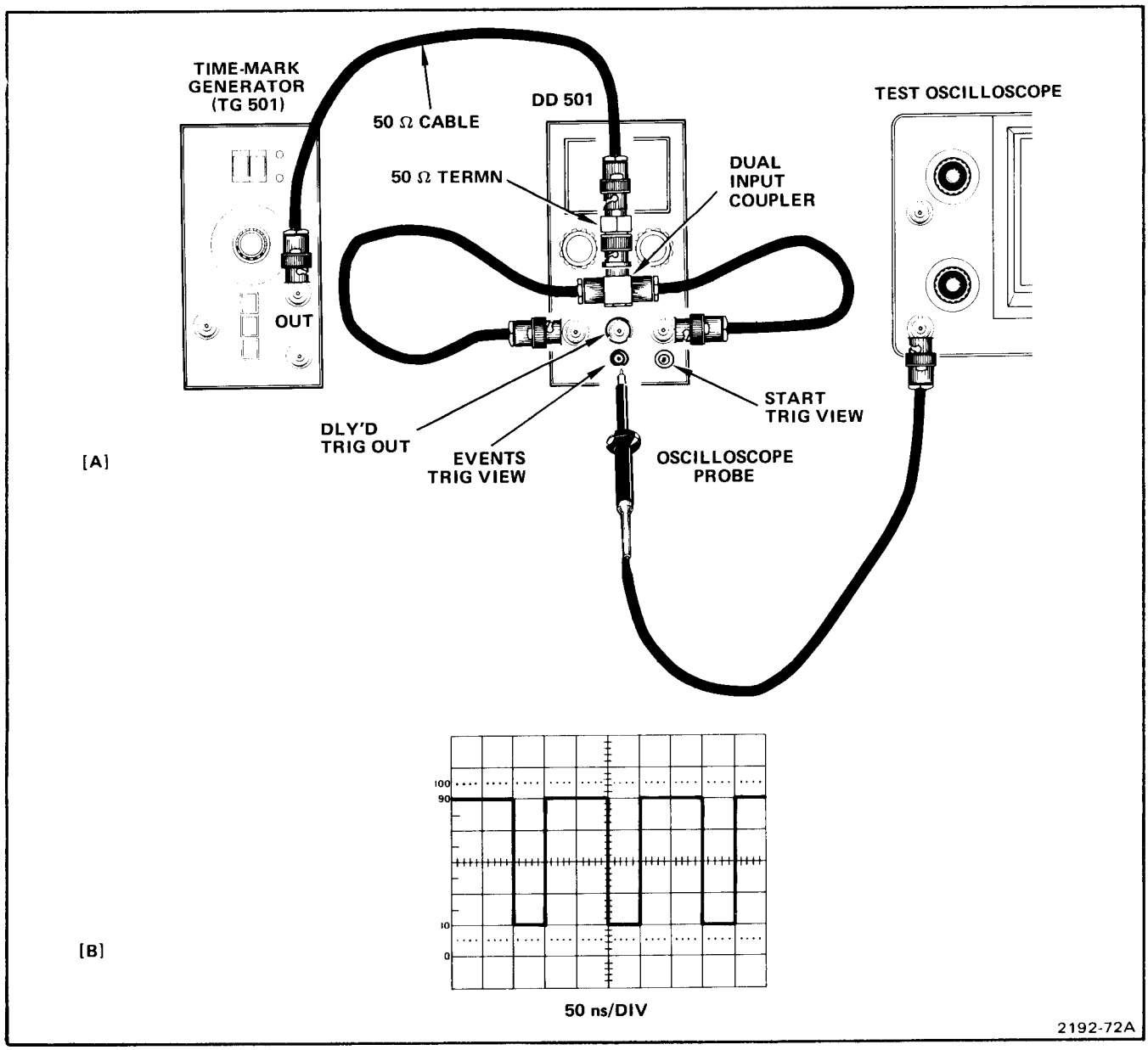

Fig. 5-4. Setup for checking modified DD501 output (idealized waveform).

TROUBLESHOOTING

The following information is helpful when troubleshooting the 851. Information found in other sections of this manual, such as the Theory of Operation and Circuit Diagrams, is also helpful in finding circuit problems.

RECOMMENDED TEST EQUIPMENT

You will find the following equipment, or the equivalent, useful when troubleshooting an 851.

1. Another 851. The unique features of the 851 simplify troubleshooting of digital equipment such as the 851 itself.

2. If another 851 is not available, you will need a digital multimeter such as a TEKTRONIX DM 501 or equivalent.

3. Test oscilloscope such as a TEKTRONIX 475 Portable Oscilloscope or equivalent.

TROUBLESHOOTING CHART

Figures 8-3 and 8-4, in the Diagrams section, are troubleshooting charts. These charts will help you isolate the problem to a specific circuit.

CHECKING INDIVIDUAL COMPONENTS

The following information describes methods of checking individual components in the 851. Figure 5-5 shows semiconductor lead configuration. Figure 5-6 shows component color codes. See Static Sensitivity precautions on page 5-1.

Transistors

A good check of transistor operation is actual performance under operating conditions. A transistor can be most effectively checked by substituting a new component or one that has been checked previously. However, be sure that circuit conditions are not such that a replacement transistor might also be damaged. If substitute transistors are not available, use a dynamic tester. See Fig. 5-5 for transistor lead configuration.

When troubleshooting transistors in the circuit with a voltmeter, measure the emitter-to-base and emitter-to-collector voltages to determine if the voltages are consistent with normal circuit voltages. Voltages across a transistor vary with the type of device and its circuit function. Some of these voltages are predictable. The emitter-to-base voltage of a conducting silicon transistor will normally be 0.6 to 0.8 volt. The emitter-to-collector voltage of a saturated transistor is about 0.2 volt. Because these values are small, the best way to check them is by connecting the voltmeter across the junction and using a sensitive voltmeter setting, rather than by comparing two voltages taken with respect to ground (both leads of the voltmeter must be isolated from ground if this method is used). If values less than these are obtained, either the device is short-circuited or no current is flowing in the circuit. If values are in excess of the base-emitter values given, the junction is back-biased or the device is defective. Values in excess of those given for emitter-collector could indicate either a nonsaturated device operating normally, or a defective (open-circuited) transistor. If the device is conducting, voltage will be developed across resistances in series with it; if it is open, no voltage will be developed across resistances in series with it unless current is being supplied a path parallel to the transistor.

Diodes

CAUTION

Do not use an ohmmeter scale that has a high internal current or an unloaded terminal voltage exceeding about 1.5 volts. High currents can damage diodes. Check diodes in the same manner as transistor emitter-to-base junctions. Silicon diodes should have 0.6 to 0.8 volt across the junction when conducting. Higher readings indicate that they are either back-biased or defective, depending on polarity.

A diode can be checked for an open or a short circuit by measuring the resistance between terminals with an ohmmeter set to the R X 1 kilohm scale. Unsolder one end of the diode to prevent loading by associated circuitry. The diode resistance should be very high in one direction and very low when the meter leads are reversed.

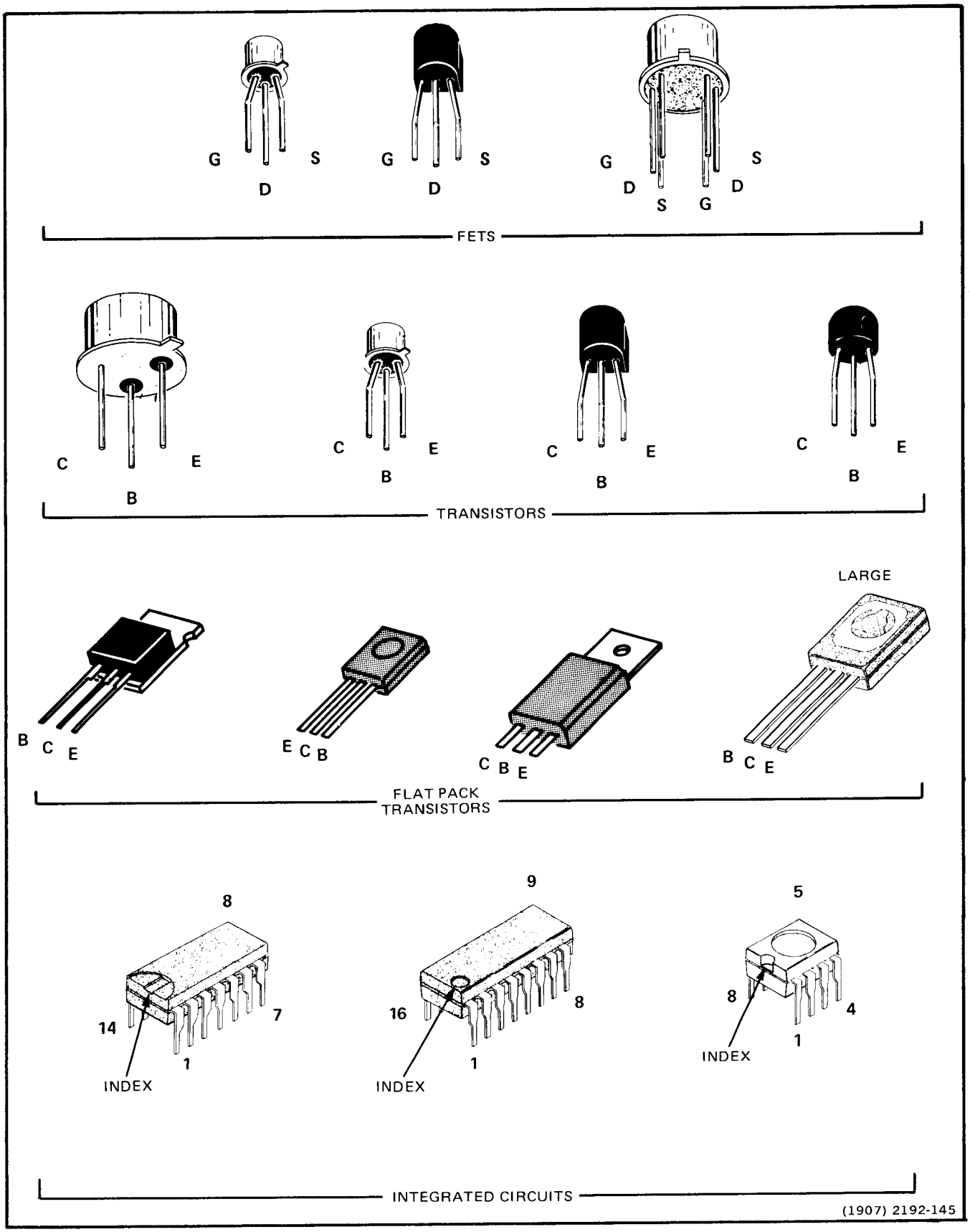

Fig. 5-5. Semiconductor lead configuration.

1907-16A

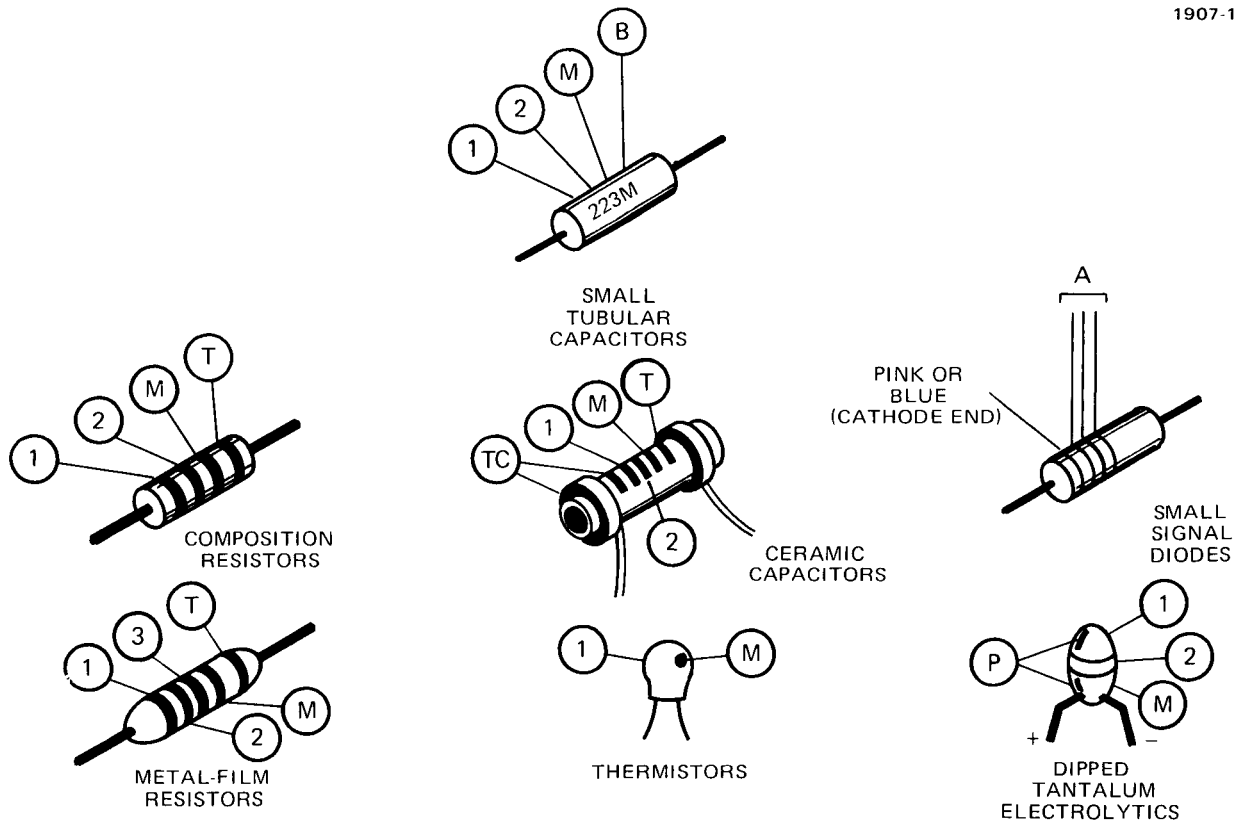

(A) COLORS IDENTIFY SIGNIFICANT DIGITS IN TEKTRONIX PART NUMBER (E.G. BROWN, GRAY, GREEN STRIPES INDICATE PART NUMBER 152-0185-00)

(1) (2) and (3) 1ST, 2ND, AND 3RD SIGNIFICANT FIGS.

(M) MULTIPLIER (T) TOLERANCE;

(TC) TEMPERATURE COEFFICIENT.

(B) TOLERANCE; F=±1%, J=5%, K=10%, M=20%

(T) AND/OR (TC) COLOR CODE MAY NOT BE PRESENT ON SOME CAPACITORS;

(P) POLARITY AND VOLTAGE RATING

COLOR	SIGNIFICANT FIGURES	RESISTORS (Ω)		CAPACITORS (pF)			DIPPED TANTALUM VOLTAGE RATING
		MULTIPLIER	TOLERANCE	MULTIPLIER	TOLERANCE		
					over 10 pF	under 10 pF	
BLACK	0	1	---	1	±20%	±2 pF	4 VDC
BROWN	1	10	±1%	10	±1%	±0.1 pF	6 VDC
RED	2	10^2 or 100	±2%	10^2 or 100	±2%	---	10 VDC
ORANGE	3	10^3 or 1 K	±3%	10^3 or 1000	±3%	---	15 VDC
YELLOW	4	10^4 or 10 K	±4%	10^4 or 10,000	+100% –9%	---	20 VDC
GREEN	5	10^5 or 100 K	±½%	10^5 or 100,000	±5%	±0.5 pF	25 VDC
BLUE	6	10^6 or 1 M	±¼%	10^6 or 1,000,000	---	---	35 VDC
VIOLET	7	---	±1/10%	---	---	---	50 VDC
GRAY	8	---	---	10^{-2} or 0.01	+80% –20%	±0.25 pF	---
WHITE	9	---	---	10^{-1} or 0.1	±10%	±1 pF	3 VDC
GOLD	–	10^{-1} or 0.1	±5%	---	---	---	---
SILVER	–	10^{-2} or 0.01	±10%	---	---	---	---
NONE	–	---	±20%	---	±10%	±1 pF	---

Fig. 5-6. Color codes.

Resistors

Check the resistors with an ohmmeter. Unsolder one end of the resistor to prevent loading by associated circuitry. Check the parts list for tolerance of the resistors used in this instrument. Resistors normally do not need to be replaced unless the measured value varies considerably from the specified value.

Inductors

Check for open inductors by checking continuity with an ohmmeter. Defective inductors can usually be found by checking the waveform response when high-frequency signals are passed through the circuit.

Capacitors

A leaky or shorted capacitor can usually be found by checking its resistance with an ohmmeter. Unsolder one lead of the capacitor to prevent loading by associated circuitry. Be sure the unloaded terminal voltage of the ohmmeter does not exceed the voltage rating of the capacitor.

A normal capacitor (when initially discharged) will show a low initial resistance. Resistance increases as the current from the ohmmeter charges the capacitor. With small capacitances, this charge time may be too short to see the initial low-resistance indication. If the capacitance is large enough to see the charge time, you can check for an open by noting that the initial low-resistance indication exists. Further indication is given by reversing the meter leads (the resistance indication should decrease as the capacitor discharges through the meter and then increase as it charges to the opposite polarity). After charging by the meter, the resistance reading should be high. If not, the capacitor is shorted or leaky.

NOTE

If you are using a DMM to test capacitors, the current supplied by the meter may be very small. With a large capacitance, this could cause a sustained low-resistance reading due to the long charge time.

CIRCUIT TROUBLESHOOTING NOTES

U806

If U806C is too fast, the counter circuit will reset when the display switch is switched from "Norm" into "Save" mode. Select U806 for normal operation when display switch is switched from "Norm" into "Save" mode.

U570

If there is a time difference between Lo to Hi transition time and Hi to Lo transition time in U570A, the 851 display will be erroneous when attempting to measure duty factor. To determine if U570A is at fault, connect a 50 kHz sinewave to the A Channel input with the function switch set to "Duty Factor". Check pin 1 of U570 for a 50% duty factor squarewave. If pin 1 has a 50% duty factor squarewave, check pin 3 of U570 for a 50% duty factor squarewave.[1] If pin 3 of U570 has a 50% duty factor squarewave, there is no need to select U570. However, if there is not a 50% duty factor squarewave at pin 3, select U570 to obtain a 50% duty factor squarewave.

DMM Auto Range Malfunction

If the 851 will not auto uprange correctly in most DMM modes, verify that the 100 MHz oscillator is adjusted to the correct frequency. The CLOCK signal from the emitters of Q1142 and Q1140 (Diagram 12) is the input signal to a series of ripple counters (Diagram 8). The CLOCK signal is rippled through U840, U842B, U842A and U844B. The QD (pin 9) output of U844B is the CARRY signal and is applied to the A/D Converter input (Diagram 2). The CARRY signal is the base signal for all switching in the A/D Converter.

The CARRY signal sets the time length for Auto Zero, Signal Integrate, and Reference Integrate. If the Integrator signal crosses zero before the end of the Reference Integrate period (two CARRY pulses), the DMM will not auto range. If the Integrator signal does not cross zero before the end of the Reference Integrate period, the DMM will auto uprange. When the 100 MHz clock is misadjusted, the Reference Integrate period will either be longer or shorter than normal. This will cause the Integrator signal to cross zero or not cross zero at the incorrect time, which will appear as if the auto ranging is malfunctioning. Since the auto range control for the DMM functions is located in the DMM circuitry, a misadjusted 100 MHz clock can point to a circuit malfunction where none exists.

[1] **If pin 1 does not have a 50% duty factor squarewave, check that the input is a sinewave. If the test signal is correct, the problem occurs in the circuitry prior to U570A.**

CORRECTIVE MAINTENANCE

OBTAINING REPLACEMENT PARTS

All electrical and mechanical replaceable parts for the 851 can be obtained through your Tektronix Field Office or representative. However, many of the standard electrical components can be obtained locally in less time than is required to order them from Tektronix, Inc. Before purchasing an ordinary part, check the parts list for value, tolerance, rating, and description.

NOTE

When selecting replacement parts, it is important to remember that the physical size and shape of a component may affect its performance in the instrument. All replaceable parts should be direct replacements unless it is known that a different component will not adversely affect instrument performance.

Some parts are manufactured or selected by Tektronix, Inc., to satisfy particular requirements, or are manufactured for Tektronix, Inc., to our specifications. Most of the mechanical parts have been manufactured by Tektronix, Inc. To determine the manufacturer of a part, refer to the Parts List Cross Index of Code Number to Manufacturer. This is found in the parts list.

When ordering replacement parts from Tektronix, Inc., include the following information:

1. Instrument type.

2. Instrument serial number.

3. A description of the part (if electrical, include circuit number).

4. Tektronix part number.

DISASSEMBLY INSTRUCTIONS

The following procedures give instructions for disassembly of the 851. Always make note of connector color codes and orientation to aid during reassembly. See Fig. 5-2 for circuit board identification.

Front Cabinet Half Removal

1. Separate cabinet halves (see Fig. 5-1).

2. Remove five screws from the Counter board (see Fig. 5-7).

3. Carefully slide front cabinet half away from front circuit board assembly.

Power Supply—Front Circuit Board Assembly Separation

1. Remove front cabinet half.

2. Remove ground connection from center of Counter board by removing screw and nut. This is an earth ground. Do not operate instrument with this wire disconnected.

3. Remove 2-wire multi-pin connector from IO board near CALIBRATOR post.

4. Remove P1300, a 10-wire multi-pin connector (two adjacent 5-wire connectors in some serial numbers) from Counter board near edge board connector to Comparator board.

5. Remove P1390, a 7-wire multi-pin connector (a 2-wire and 5-wire connector in some serial numbers) from Counter board near edge board connector to DMM board.

6. Disconnect P1320, a 4-wire multi-pin connector from Power Supply board (attached cable connects to DMM board). Front circuit board assembly is now separated from Power Supply.

Comparator Board Removal

1. Remove front cabinet half.

2. To simplify reassembly, note the color codes and orientation of the four 4-wire multi-pin connectors. These four connectors come from the THRESHOLD LEVEL controls. Figure 5-8 identifies each connector with the corresponding control.

3. Remove 8-wire multi-pin connector near bottom of Comparator board (from INPUT FILTER control).

4. Pull Comparator board away from remainder of front circuit board assembly.

DMM Board Removal

1. Separate cabinet halves.

2. Remove front cabinet half.

3. Separate front circuit board assembly from Power Supply if desired.

4. Remove protective shield from FUNCTION switch board.

5. Remove metal shield from FUNCTION switch area.

6. Note color codes on Fig. 5-9 and remove five single-wire connectors from around FUNCTION switch (see Fig. 5-9).

7. Pull DMM board away from rest of front circuit board assembly.

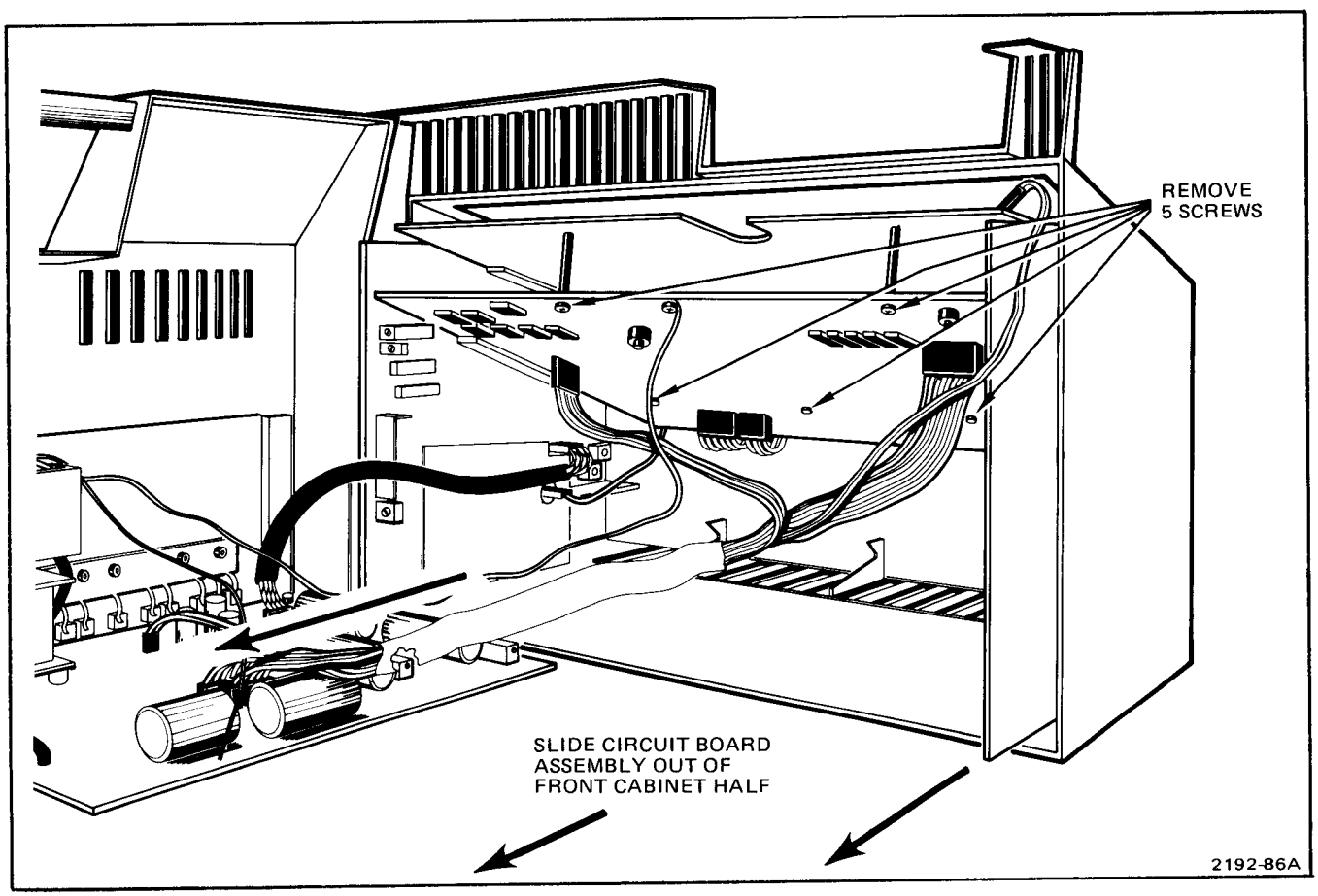

Fig. 5-7. Front cabinet half removal.

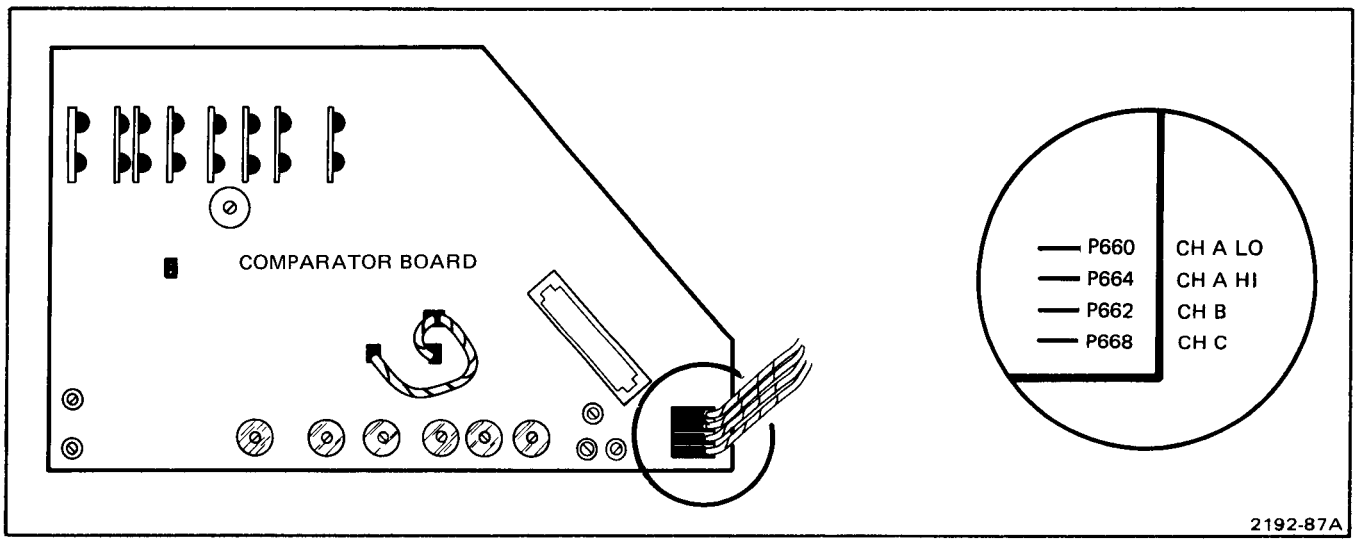

Fig. 5-8. Comparator board removal.

IO Board—Counter Board Separation

1. Remove DMM board and Comparator board.

2. Using care not to bend circuit board interconnecting pins, slightly pull IO and Counter boards apart.

3. Note color codes and orientation and remove 10-wire and 6-wire multi-pin connectors from FUNCTION switch board between IO and Counter boards.

4. Pull IO and Counter boards the rest of the way apart.

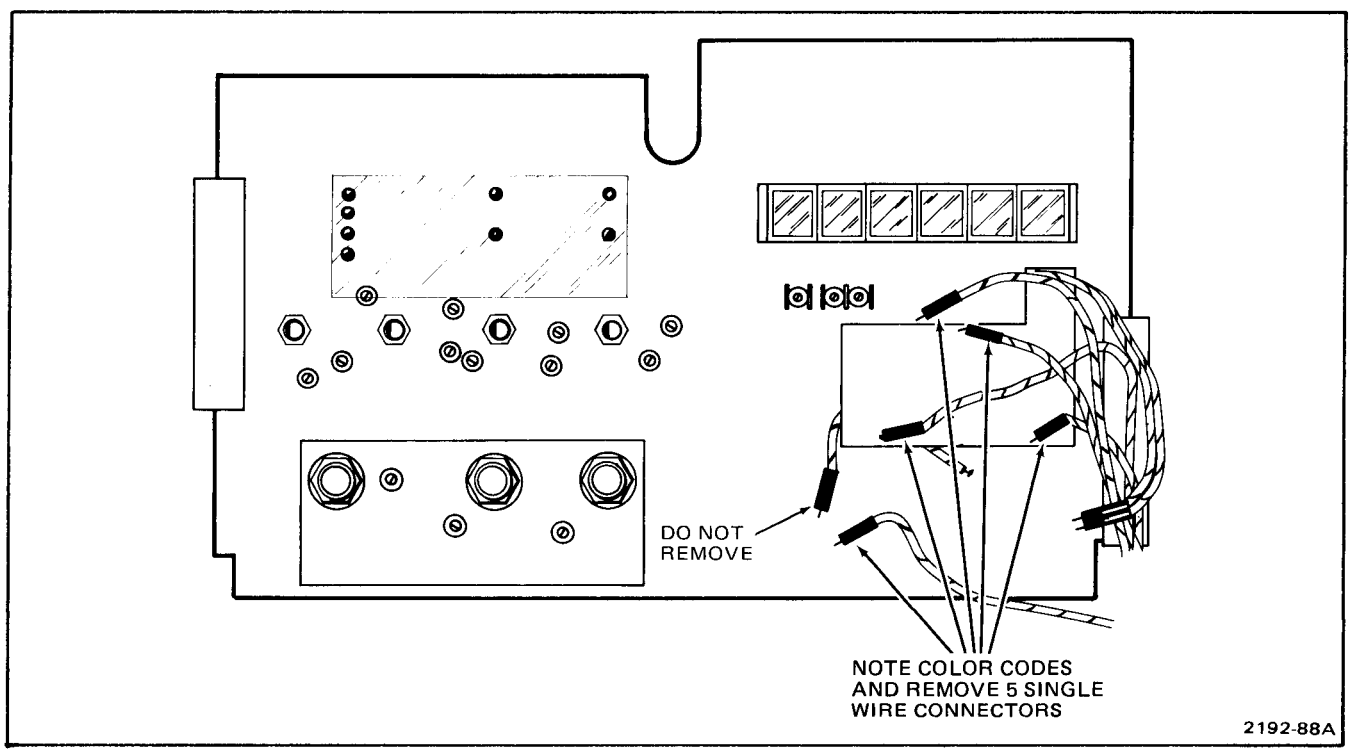

Fig. 5-9. DMM Board removal.

Power Supply Board Removal

1. Separate cabinet halves.

2. Separate front circuit board assembly from Power Supply if desired.

3. Remove one screw from corner of Power Supply board opposite power transformer (see Fig. 5-10).

4. Note which transistors have plastic insulators on them and remove four nuts from spring which holds pass transistors against heat sink.

5. Note color codes and unsolder two power input wires from bottom of Power Supply board. These wires are enclosed in an insulating sleeve which passes between the Power Supply board and the power transformer, then passes through two holes in the circuit board.

6. Remove two nuts holding power transformer to heat sink.

7. Remove ground wires by removing nuts holding solder lugs.

8. Pull Power Supply board away from rear cabinet half.

FUNCTION Switch

Avoid disassembly of the FUNCTION switch if possible (see Maintenance Precautions).

Figure 5-11 shows an exploded view of the FUNCTION switch. Carefully follow the instructions given in Fig. 5-11 during assembly.

1. Lubricate parts as shown in Fig. 5-11. Use a thin coat of Versilube (see Maintenance Aids).

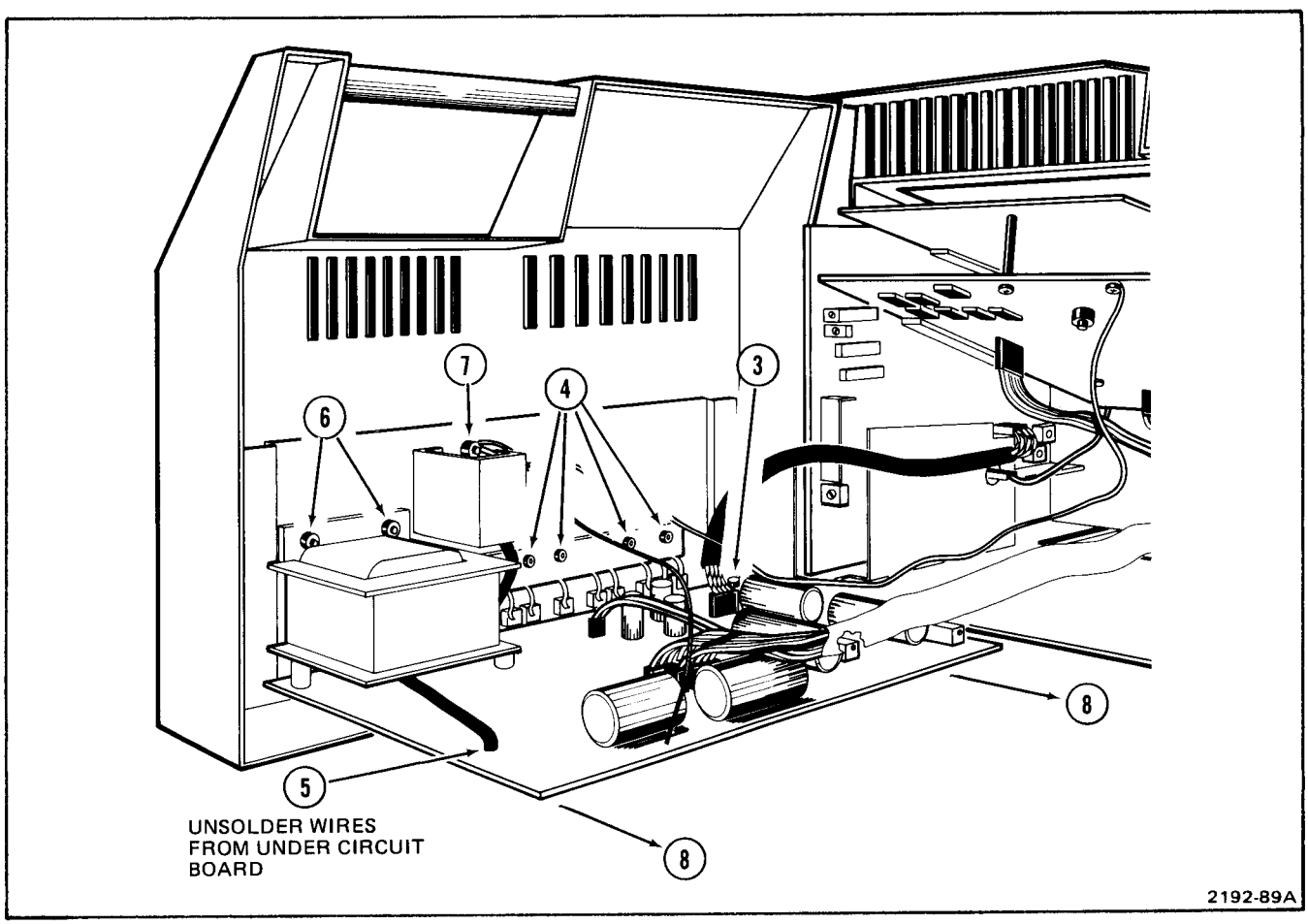

Fig. 5-10. Power Supply board removal.

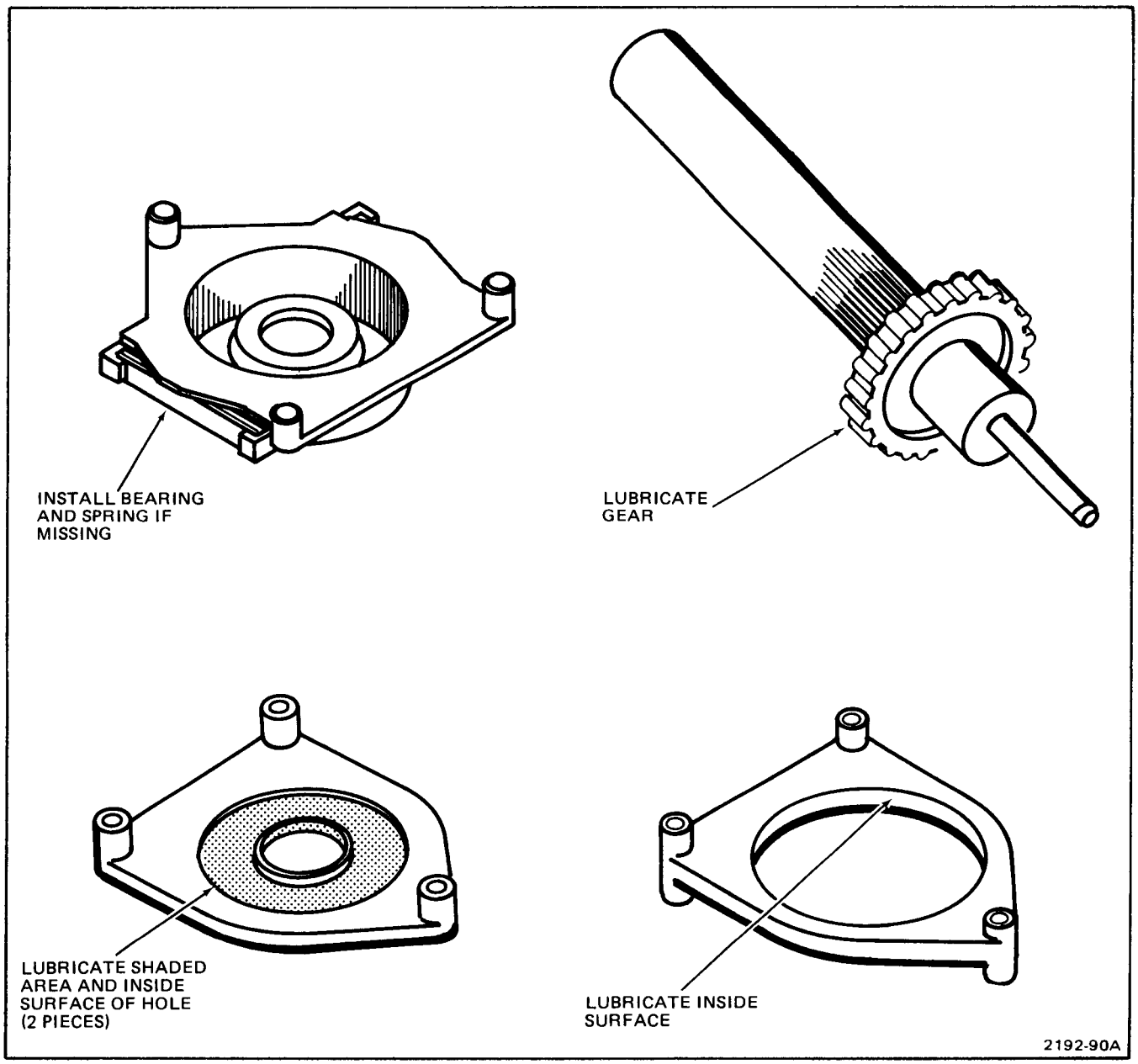

Fig. 5-11. FUNCTION switch lubrication.

2. Clean the switch pads on the circuit boards including the pads on the IO board. Use isopropyl alcohol and a lintless cloth. Any residues left on the switch boards provides leakage paths which can affect measurement accuracy.

3. Spray all circuit board switch pads with New Improved No Noise (see Maintenance Aids). Wipe off excess spray with a clean dry cloth.

4. Check contacts (on the seven wafers) for the correct height (0.058 inch from the outside edge of the wafer as shown in Fig. 5-12).

CAUTION

To avoid damage to the switch assembly, use a torque screwdriver (see Maintenance Aids) to tighten all screws. Torque all screws to 1.5 inch-pounds.

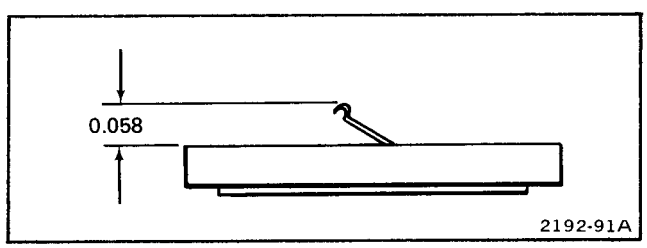

Fig. 5-12. FUNCTION switch contact height.

5. Assemble pieces as shown in Fig. 5-13. The shaft is used in this step to align the keyways in the two wafers to the same position. Remove the shaft after the parts shown in Fig. 5-14 are assembled.

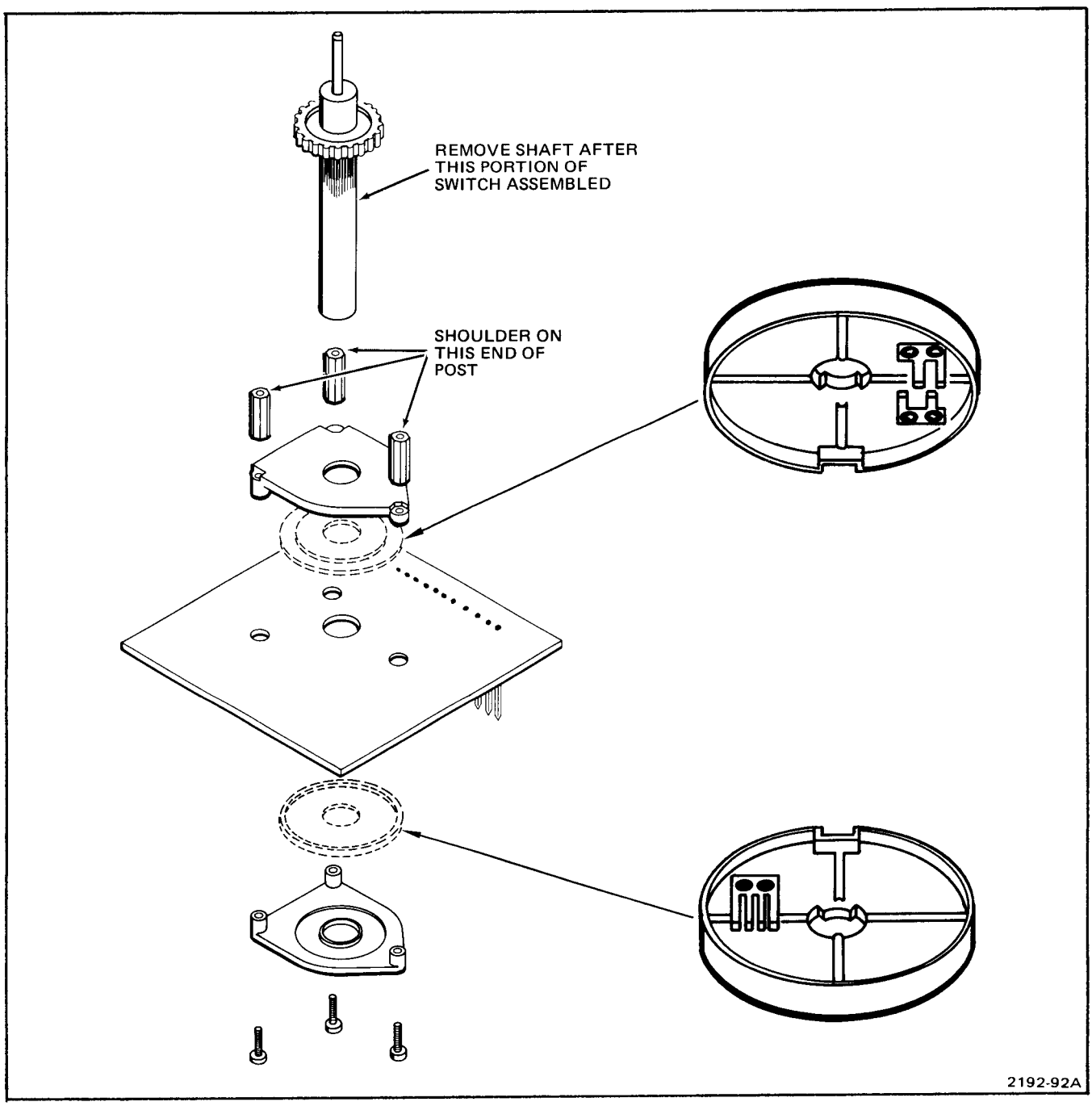

Fig. 5-13. FUNCTION switch subassembly—part 1.

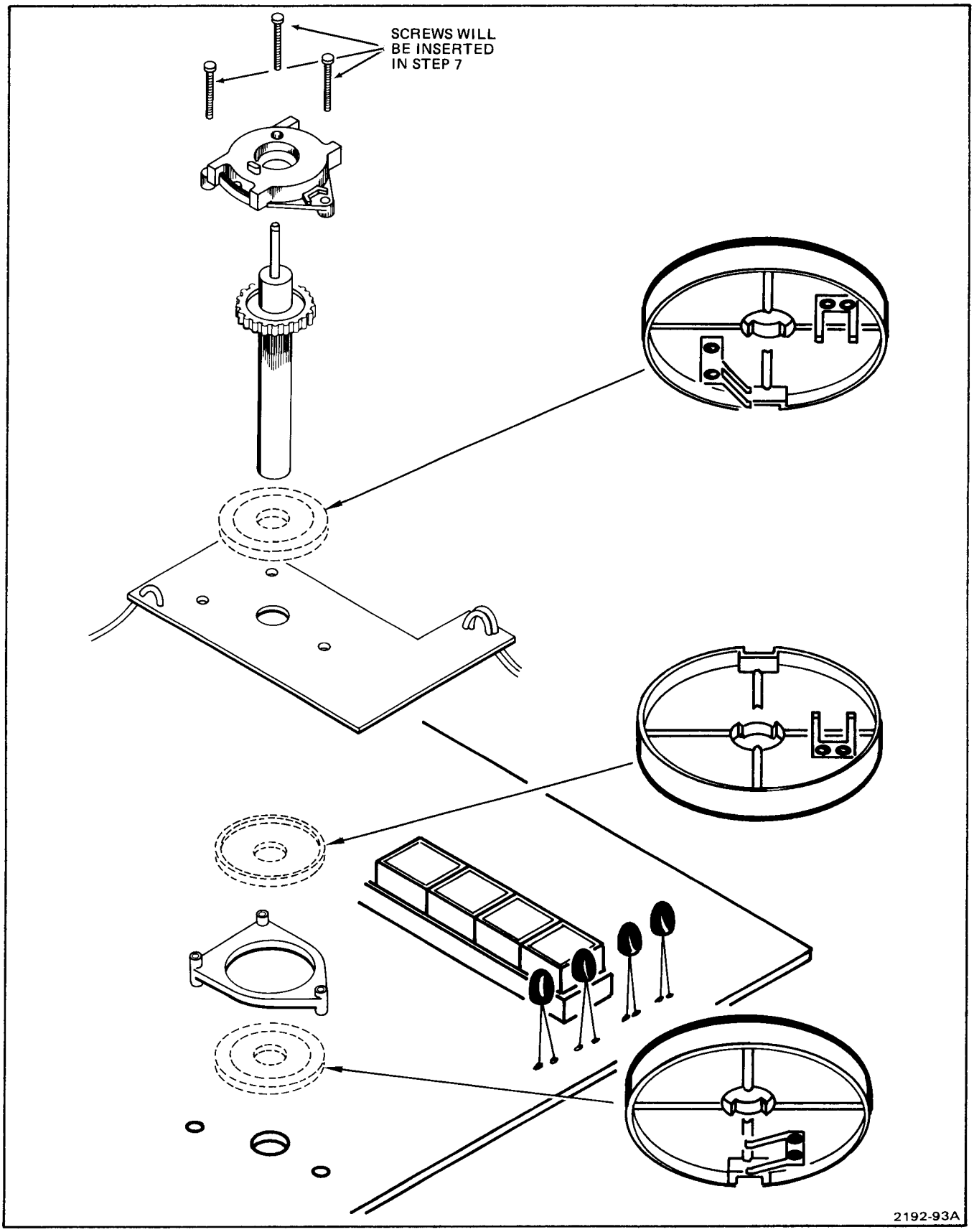

Fig. 5-14. FUNCTION switch subassembly—part 2.

6. Assemble pieces as shown in Fig. 5-14. Slide shaft through hole in IO board.

7. Assemble pieces shown in Fig. 5-15. Parts slide onto portion of shaft extending through IO board.

8. Insert screws from top of IO board (see Fig. 5-14).

9. Tighten screws using care to ensure all shoulders are properly seated in the holes in the circuit boards. Also check the shoulders on the plastic standoff posts (see Fig. 5-13).

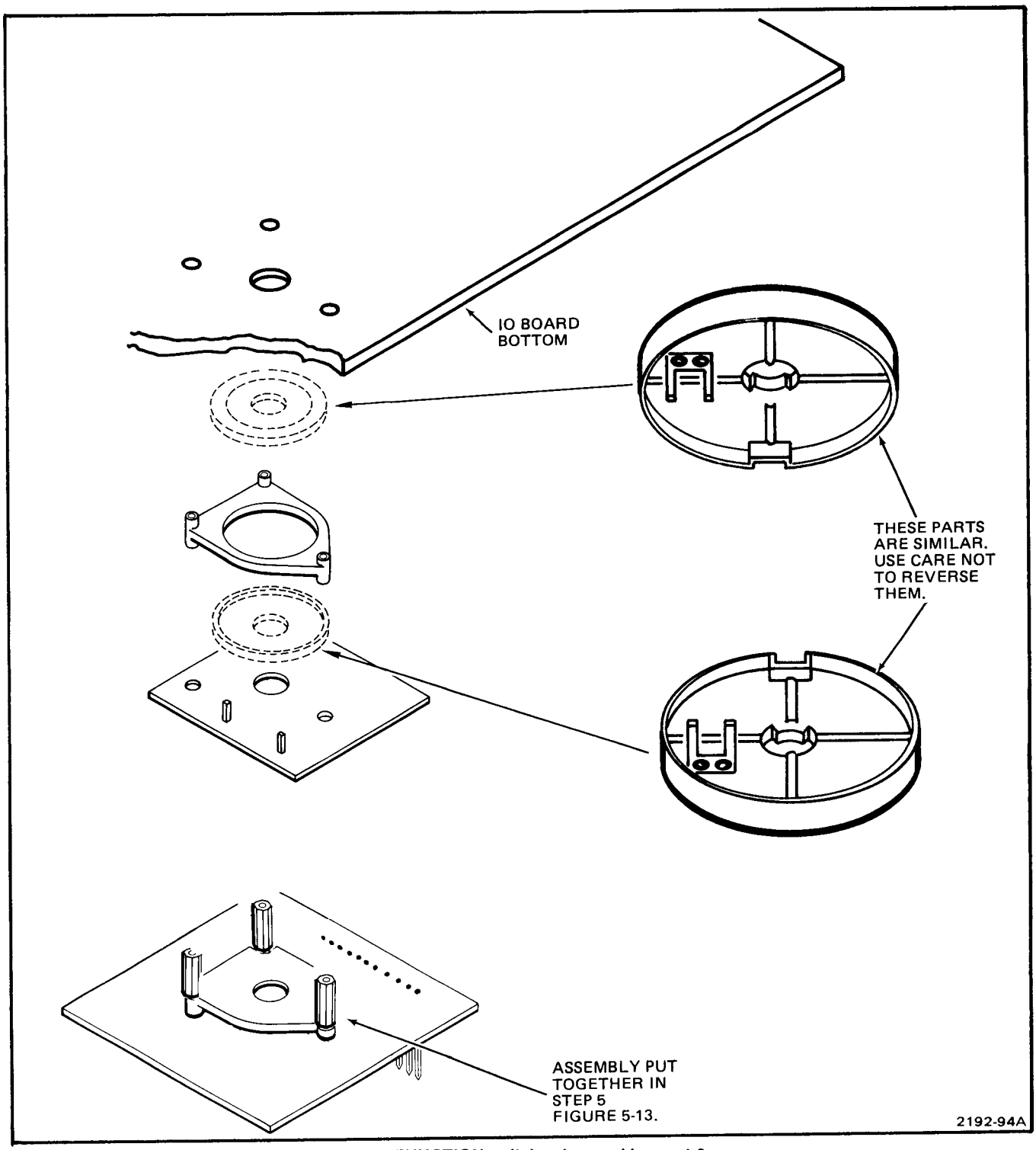

Fig. 5-15. FUNCTION switch subassembly—part 3.

MAINTENANCE AIDS

The following maintenance aids include items required for some maintenance procedures in this instrument. Equivalent products may be substituted for examples given providing characteristics are similar.

DESCRIPTION	SPECIFICATIONS	USE	EXAMPLE
1. Soldering Iron	15 Watt	General soldering and unsoldering	ANTEX PRECISION Model C
2. Screwdriver	Phillips #1 tip	Assembly and Disassembly	Xcelite Model X108
3. Screwdriver	Phillips #2 tip	Assembly and Disassembly	Xcelite Model X102
4. Screwdriver	Three-inch shaft; 3/32" flat bit	General	Xcelite R3323
5. Torque Screw-driver	1.5 inch-pounds	FUNCTION switch assembly	Sturtevant-Richmont Torque Products Model PM-5 Roto-Torq
6. Nutdrivers	1/4", 5/16" 3/8", 7/16"	General	Xcelite #8, #10, #12 & #14
7. Open End Wrench	11/16"	General	
8. Solder Wick		Unsoldering	Hex Wik #887-10
9. Lubricant	Versilube	FUNCTION switch lubrication	Tektronix Part Number 006-1353-00
10. Spray Cleaner	No Noise	FUNCTION switch pad cleaning	Tektronix Part Number 006-0442-02.

THEORY OF OPERATION

LOGIC SYMBOLS

The logic symbols in this Theory of Operation section and in the Diagrams section reflect the function being performed. This may differ from that shown in a data book. Figure 6-1 shows equivalent logic symbols. The first symbol shown is an AND gate. The AND gate symbol will be used when the desired function (output HI) is performed when both inputs are HI. An OR symbol with inversion bubbles on both inputs and the output will be used when the desired function (output LO) is performed when one, or both of the inputs is LO.

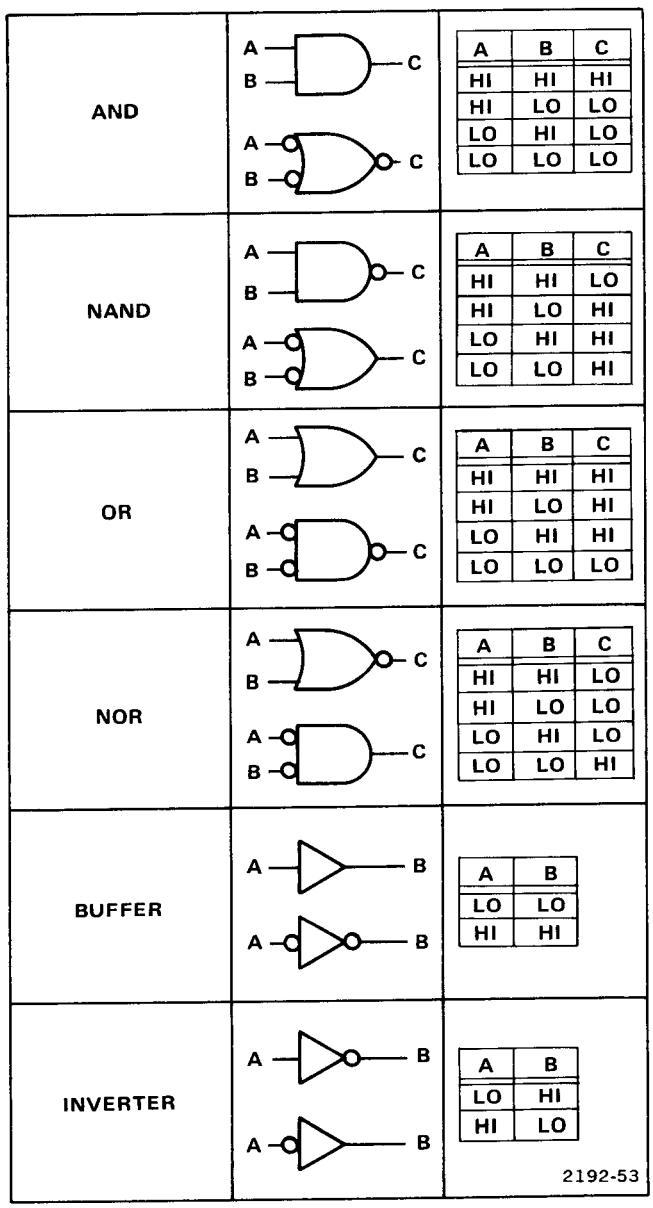

Fig. 6-1. Logic symbols.

OVERALL OPERATION OF EACH FUNCTION

The following lists all the 851 functions and describes in very basic terms how the instrument performs those functions.

Diagram 13 shows the FUNCTION switch. The right side of the diagram shows mostly control line switching. The left side of the diagram shows mostly signal switching. Some of the switching shown on diagram 13 is repeated on other diagrams. It is repeated on diagram 13 to enable you to locate all signal lines and control lines being switched in a given function.

PEAK

In either the + Peak or − Peak functions, the most positive or most negative peak of the A input signal is measured. This is done by comparing the input signal to the dc voltage from the Peak Detector circuit instead of the voltage from the THRESHOLD control. If the input signal peaks exceed this dc voltage, the Peak Detector increases the dc voltage. If the input signal peaks do not reach this dc voltage for a set period, the Peak Detector changes the dc voltage. The resulting dc voltage is measured by the Analog To Digital Converter.

PERCENT DUTY FACTOR

In the POS setting of the A SLOPE switch, this function measures the percentage of the time the A input signal is HI. In the NEG setting of the A SLOPE switch, this function measures the percentage of time the A input signal is LO. This is done by alternately charging and discharging a capacitor. In the POS setting of the A SLOPE switch, the capacitor is charged while the input signal is HI and discharges while the input signal is LO. The resulting average dc voltage is proportional to the duty factor and is measured by the Analog To Digital Converter.

FREQ

This function measures the frequency of the A input signal. The Decade Counters count the A signal repetitions for a period of time determined by the Counter Gate Logic and the Frequency And Time Autorange Decode circuit. As the input signal frequency increases, the Frequency and Time Autorange Decode circuit decreases the duration of the counter gate. This prevents an overrange condition.

PERIOD

This function measures the duration of one repetition of the A input signal. The Decade Counters count clock pulses for a time determined by the Counter Gate Logic. The counter gate starts at the beginning of an A signal repetition (threshold crossing) and ends at the beginning of the next A signal repetition.

WIDTH

This function measures the pulse width of either the positive or negative portion of the A input signal (as determined by the A SLOPE and A THRESHOLD control settings). The Decade Counters count clock pulses for a time determined by the Counter Gate Logic. In the POS setting of the A SLOPE switch, the counter gate starts when the A input signal steps above the A HI threshold voltage and ends when the input signal steps below the A LO threshold voltage. In the NEG setting of the A SLOPE switch, the counter gate starts when the A signal steps below the A HI threshold voltage and ends when the A signal steps above the A LO threshold voltage.

TRNSN TIME

This function measures the time it takes for the A input signal to go from one threshold level to the other. The polarity of the transition measured is determined by the A SLOPE setting. The Decade Counters count clock pulses for a time determined by the Counter Gate Logic. The counter gate starts when the A signal passes through one threshold level and ends when it passes through the other threshold level.

TOTALIZE

This function continuously counts A signal repetitions. The Decade Counters are set to 00000 when the DISPLAY switch is pushed to CLEARTEST and released (returns to the SAVE position). The Decade Counters begin counting when the DISPLAY switch is set to NORM and stop counting when the DISPLAY switch is again set to SAVE.

FREQ RATIO

This function measures the ratio of the A signal frequency with respect to the C signal frequency. The Decade Counters count the A signal repetitions for a time determined by the Counter Gate Logic. The counter gate starts at the beginning of a C signal repetition and ends at the beginning of the next C signal repetition.

A COUNT (B → C)

This function counts signal repetitions from the occurrence of a transition of the B signal to the occurrence of a transition of the C signal. The B and C SLOPE switches control the slope of the transitions which start and stop the count (they do not have to be the same). The Decade Counters count clock pulses for a time determined by the Counter Gate Logic. The counter gate starts on a transition of the B signal and ends on a transition of the C signal.

A TRNSN (B → C)

This function is similar to A Count (B to C). The difference is this function counts both positive and negative transitions of the A signal.

TIME (B → C)

This function measures the time between a transition of the B signal and a transition of the C signal. Polarity of each is dependent on the settings of the B and C SLOPE switches. The Decade Counters count clock pulses for a time determined by the Counter Gate Logic. The counter gate starts on a transition of the B signal and ends on a transition of the C signal.

TIME (B · C)

This function measures coincidence time of the B and C signals. The B and C SLOPE switches determine coincidence conditions. For instance, if B SLOPE is set to POS and C SLOPE is set to NEG, coincidence occurs when the B signal is HI at the same time the C signal is LO. The Decade Counters count clock pulses for a time determined by the Counter Gate Logic. The counter gate starts when coincidence occurs and ends when coincidence ends.

THRESHOLD FUNCTIONS

These functions internally measure the threshold voltages (as set by the THRESHOLD controls). The voltage from the selected THRESHOLD control is measured by the Analog To Digital Converter.

LINE

This function internally measures the ac line voltage applied to the 851. A voltage from the secondary winding of a transformer (not the power transformer) is supplied to the AC Converter in the DMM.

OVERALL BLOCK DIAGRAM

Figure 6-2 shows the overall block diagram of the 851.

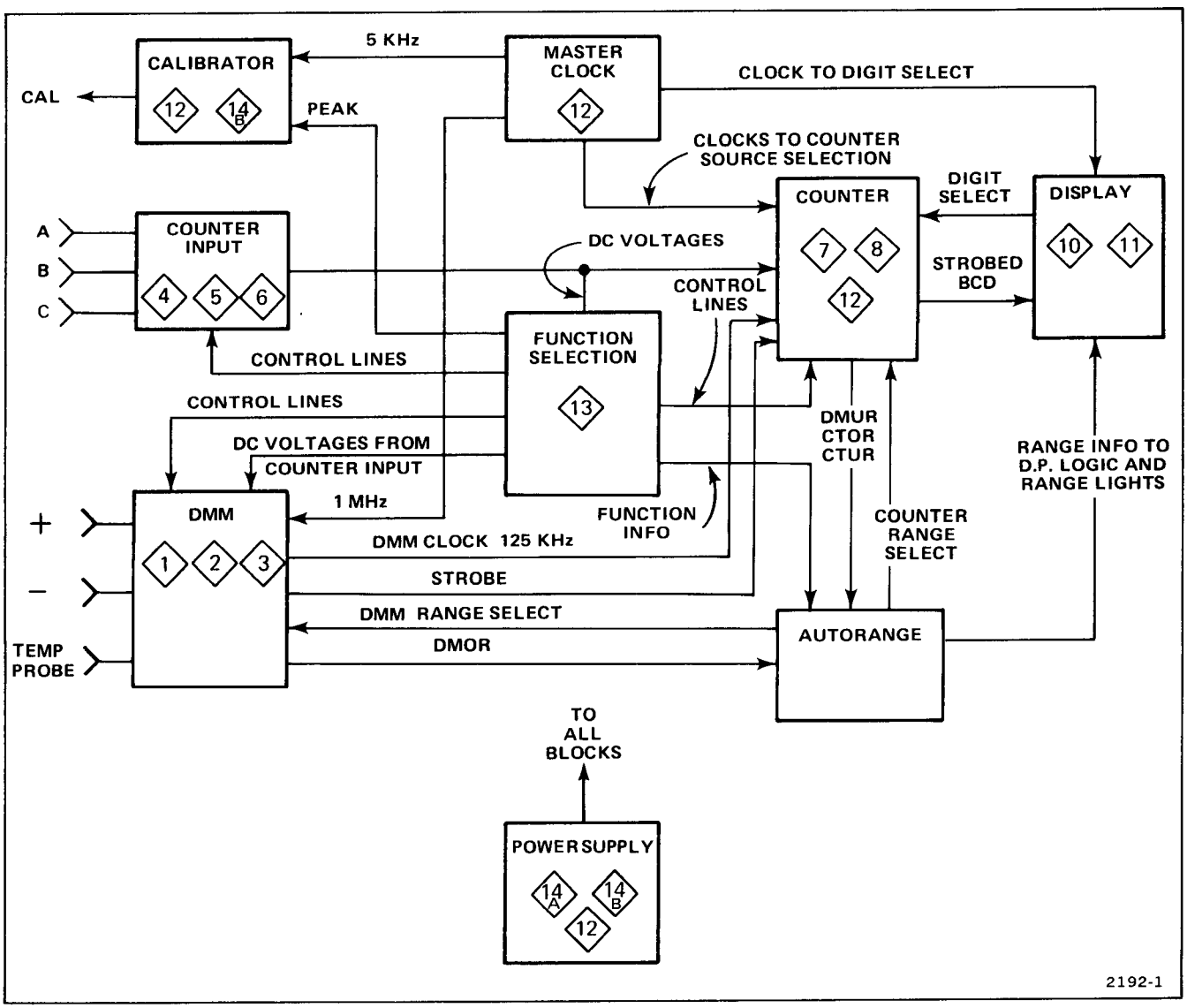

Fig. 6-2. Basic block diagram of the 851.

DIGITAL MULTIMETER (DMM)

The DMM circuit contains several Input Converters and an Analog To Digital Converter. The input converters supply dc voltages to the Analog To Digital Converter. These dc voltages are proportional to the magnitude of the measurements being made. The Analog To Digital Converter supplies clock pulses to the Counter circuitry. When the number of pulses supplied is proportional to this dc voltage, the Analog To Digital Converter causes the accumulated count to be latched into the Storage Latches in the Display circuit.

COUNTER INPUT

The counter Input accepts signals from the A, B, and C inputs. These signals are compared to dc voltages which are set by the THRESHOLD countrols or the Peak Detectors. Depending on the function selected, the Counter Input operates in one of the following modes.

1. In the Count functions, the Counter Input supplies pulses to the Counter circuitry. These pulses change states when the input signals pass through front-panel adjustable threshold voltages.

2. In the Time functions, time is measured. This is done by counting clock pulses of a known repetition rate. The length of time the clock pulses are counted is determined by the relationship of the input signal(s) and the threshold level(s).

3. In the Peak and Duty Factor functions, the Counter Input supplies a dc voltage to the DMM circuitry. This dc voltage is proportional to the measurement being made. The DMM circuit converts this dc voltage to digital information which is supplied to the Display circuit.

COUNTER

The counter circuit counts pulses from one of the following sources:

1. Clock in the Period, Width, Transition Time, Time B to C, and Time B and C.

2. Output of the Input Comparators in Totalize, Frequency, Frequency Ratio A/C, A Count B to C, A Transitions B to C.

3. Analog To Digital Converter in −Peak, +Peak, Duty Factor, Threshold, Line Voltage, Temperature, and DMM functions.

The time the Counter counts is determined by Function Selection and ranging circuits.

The output of the Counter provides BCD information to storage registers in the Display circuit. The Counter provides overrange and underrange information to the Autoranging circuitry.

DISPLAY

The Display circuit converts the BCD information from the Counter to seven-segment information and displays it on five seven-segment LED displays. The five digits are displayed one at a time (strobed). Each digit is strobed about 100 times per second. Leading zeros are blanked. The Display circuit also contains logic to control decimal point location and range indication.

MASTER CLOCK AND CALIBRATOR

The master clock runs at 100 MHz. This is divided down as required for each circuit. The frequency of the clock supplied to some circuits is determined by Function selection and ranging.

The Calibrator supplies a gated 5 kHz signal to a front-panel connector. This signal is used for probe compensation and performance verification. See the Operator's manual or Section 2 of this manual for probe compensation instructions.

AUTORANGE LOGIC

The Autoranging Logic causes upranging or downranging when an overrange or an underrange condition is sensed. The circuit also contains logic to limit the maximum and minimum allowable ranges dependent on the function selected.

POWER SUPPLY

The Power Supply provides the dc voltages needed to operate the instrument.

DIGITAL MULTIMETER (DMM)

DMM BLOCK DIAGRAM DISCUSSION

Figure 6-3 shows a simplified block diagram of the DMM portion of the 851. In the Block Diagram Discussion, the function of each block is briefly described. Following the Block Diagram Discussion, each block is described in detail.

OHMS Converter

The OHMS Converter supplies a measurement current to the unknown resistance being measured. This current produces a voltage across the unknown resistance. This voltage is proportional to the unknown resistance and is supplied to the Analog To Digital Converter. The DMM Autorange Decode circuit controls the OHMS range by controlling the value of the measurement current. This current is constant for a given range.

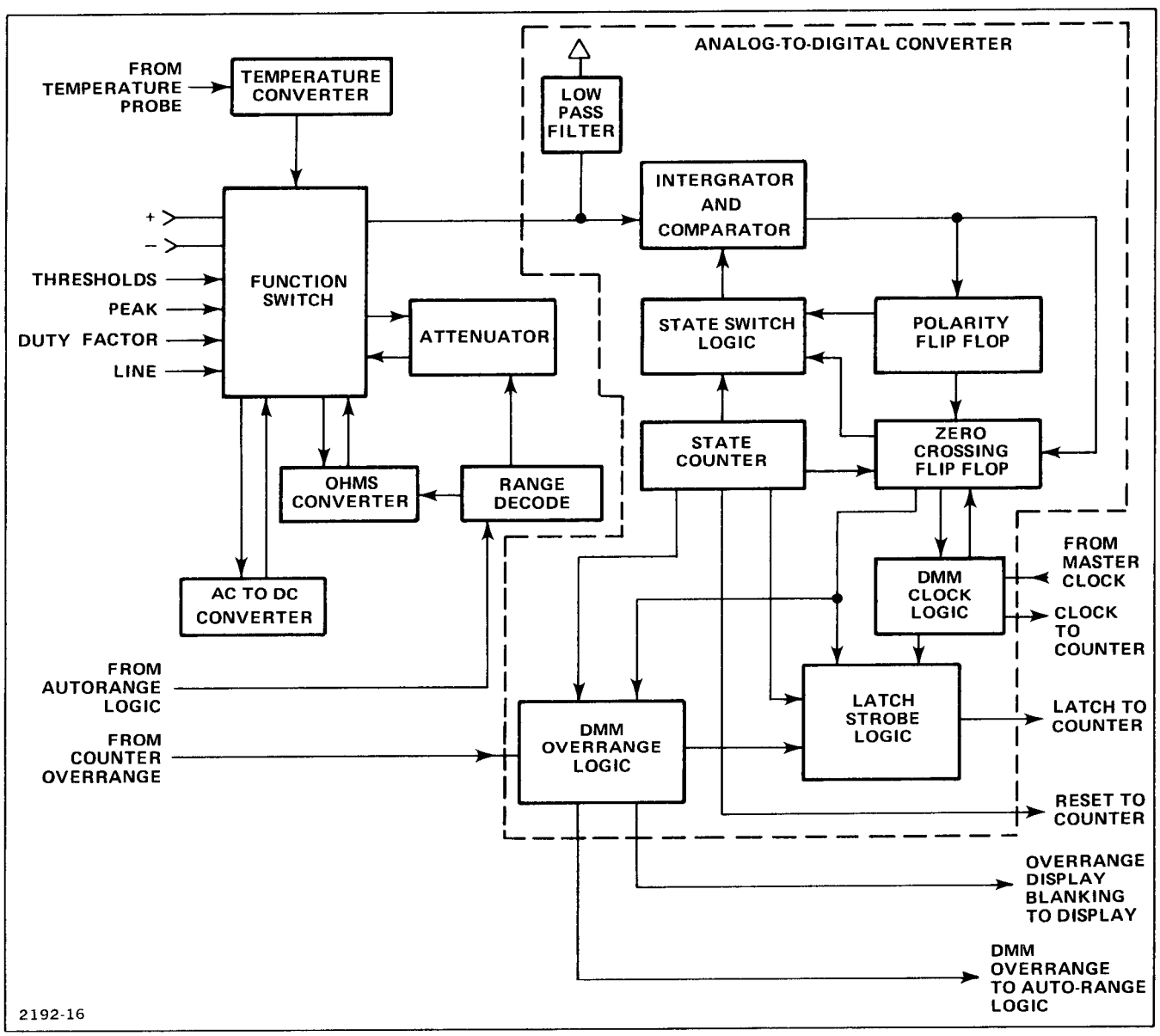

Fig. 6-3. Simplified block diagram of the DMM portion of the 851.

AC to DC Converter

The ac voltage applied to this circuit is ac-coupled, half-wave rectified and filtered. The output of the circuit is supplied to the Analog To Digital Converter. The resulting dc voltage is proportional to the ac voltage being measured.

Temperature Converter

The Temperature Converter supplies a constant current to the sensing transistor in the temperature probe. The resulting voltage between the base and emitter of the sensing transistor is proportional to the temperature being measured. The output of this circuit is supplied to the Analog To Digital Converter.

Analog To Digital Converter

In DMM functions, the Analog To Digital Converter controls when the count in the Counter is supplied to latches in the Display circuit. The count in these latches is proportional to the measurement being made.

DMM Range Decode

The Autorange Logic supplies the input signals to this circuit. The outputs of this circuit control DMM ranging.

In all DMM functions except OHMS, the outputs of this circuit control several relays in the Attenuator. One or two of these relays close to select the attenuation factor.

In the OHMS function, the outputs of this circuit control several relays in the OHMS Converter. One of several combinations of relay closures selects current determining resistor(s). The value of these resistors determines the value of the measurement current supplied to the unknown resistance. The value of this current determines the OHMS range.

Attenuator

The input voltage, selected by the FUNCTION switch, is supplied to the Attenuator. The Attenuator, controlled by DMM Autorange Decode, attenuates the voltage by one of several factors. The resulting voltage will be within the operating range of the Analog To Digital Converter unless the magnitude of the measurement is outside the limits specified in Section 1 of this manual.

OHMS CONVERTER 3 1

Figure 6-4 shows a simplified diagram of the OHMS Converter.

The OHMS Converter consists of two constant current sources; the Reference Current Source and the Measurement Current Source. The value of the reference constant current is the same regardless of the OHMS range. The value of the measurement current is constant for a given OHMS range but its constant value is different for different OHMS ranges. Figure 6-4 shows the OHMS ranges and the corresponding measurement currents.

Reference Current Source

The lower portion of Fig. 6-4 shows the Reference Current Source.

A stable reference voltage is applied to R340. This tries to pull pin 2 of U340 positive. Pin 3 of U340 is grounded (0 volts). The output of U340 adjusts the bias on Q340 so that Q340 supplies just enough current to R340 to hold pin 2 of U340 at 0 volts also. The resulting voltage across R340 is constant. This produces a constant current which flows through R340, Q340, R343, and R345.

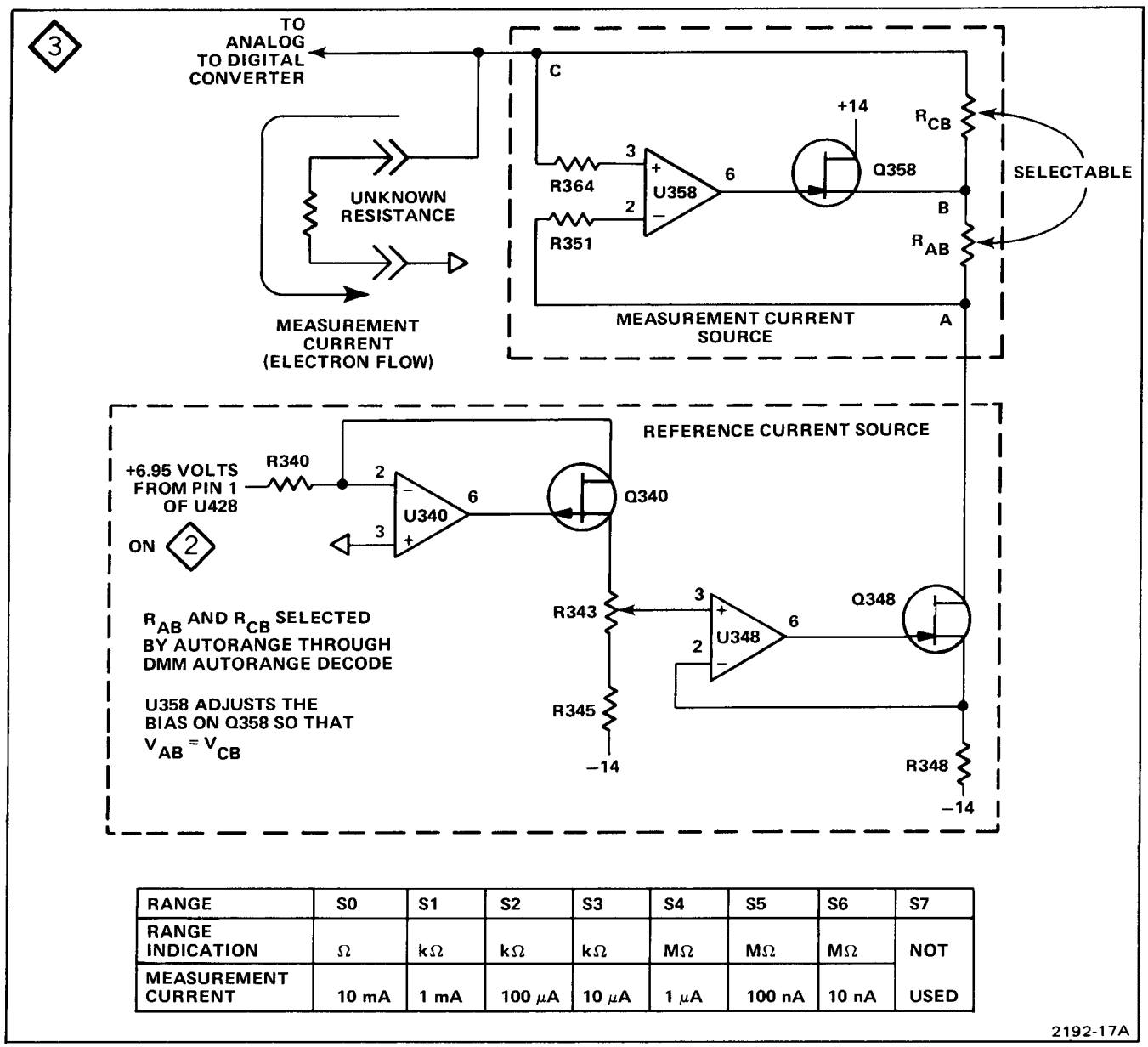

RANGE	S0	S1	S2	S3	S4	S5	S6	S7
RANGE INDICATION	Ω	kΩ	kΩ	kΩ	MΩ	MΩ	MΩ	NOT
MEASUREMENT CURRENT	10 mA	1 mA	100 μA	10 μA	1 μA	100 nA	10 nA	USED

Fig. 6-4. Simplified diagram of the Ohms Converter.

The constant current through R343 and R345 produces a constant voltage at the wiper of R343. If R343 does not have enough adjustment range, P344 can be removed to add R344 in series with R343. The constant voltage on the wiper of R343 is supplied to pin 3 of U348. To hold the voltage on pin 2 of U348 at the same voltage as on pin 3, the output of U348 adjusts the bias on Q348. The resulting voltage across R348 is constant and produces a constant current through R348 and Q348. This constant current is the reference current.

Measurement Current Source

The upper portion of Fig. 6-4 shows the Measurement Current Source.

The constant reference current from Q348 flows through R_{ab} producing a constant voltage drop (V_{ab}) across R_{ab} (see Fig. 6-4). To keep both inputs of U358 at the same voltage, the voltage across R_{ab} (V_{ab}) must equal the voltage across R_{cb} (V_{cb}). To do this, U358 adjusts the bias on Q358. Since V_{ab} is constant and V_{ab} equals V_{cb}, V_{bc} is also constant. This produces a constant current through R_{cb}. This constant current is the measurement current. R_{ab} and R_{cb} are relay selected to provide the correct measurement current for the range selected.

All of the measurement current is supplied to the unknown resistance being measured. This produces a voltage drop across the unknown resistance that is proportional to its resistance. This voltage is supplied to the Analog To Digital Converter. As this voltage increases, U358 adjusts the bias on Q358 to increase the voltage at point B by an equal amount. Since the current through R_{ab} is constant, this increases the voltage at point A by an equal amount. Under normal operating conditions, the voltages at points A and C will always be equal to each other.

OHMS Protection

Figure 6-5 shows a simplified diagram of the OHMS Protection circuit. This circuit prevents damage to the OHMS Converter when the input probes are accidentally connected to a voltage source that is within the limits specified in Section 1 of this manual.

When the voltage connected to the + input exceeds about +14 volts, CR290 becomes reverse biased to provide protection.

When the voltage connected to the + input goes more negative than about −8 volts, Q352 and Q356 provide protection. The negative input voltage pulls the base of Q352 more negative through CR290, CR291, CR294, R296, and R297. When the base of Q352 becomes negative enough, Q352 turns on, which turns on Q356. When Q356 turns on it pulls the base of Q320 positive enough to hold Q320 off regardless of the signals from the DMM Autorange Decode circuit. With Q320 off, relay K320 will be open and there will be at least 100 kΩ (R359D and R359E) in series with the + input. This resistance limits the input current to a safe level as long as the maximum safe input voltage specified in Section 1 of this manual is not exceeded.

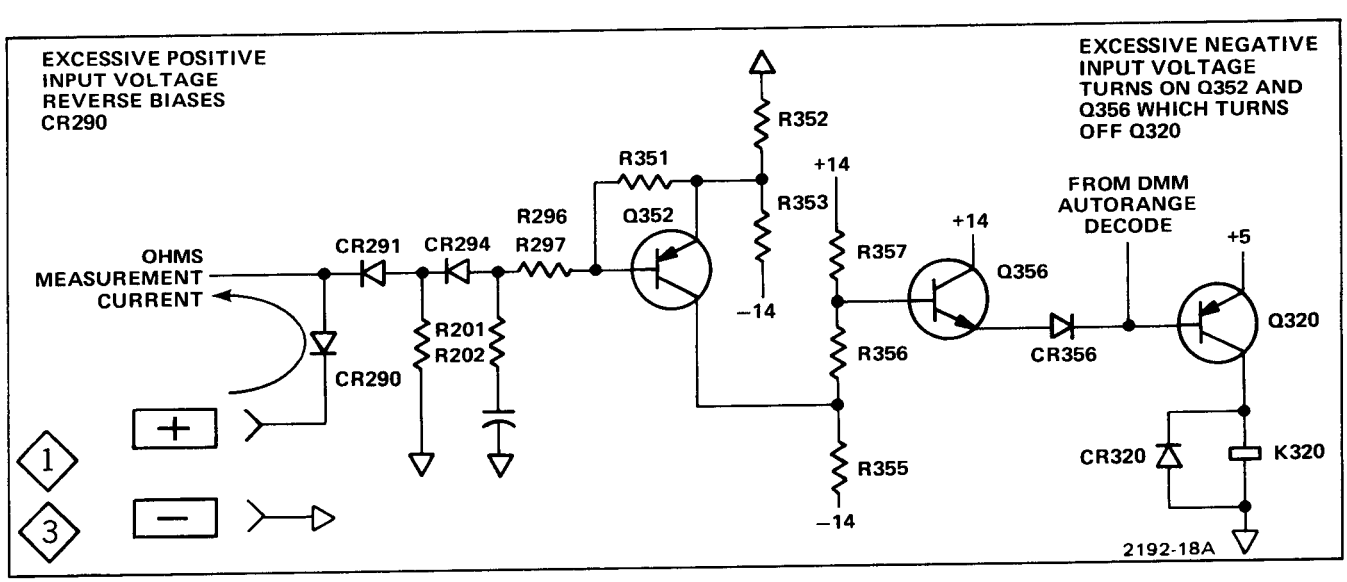

Fig. 6-5. Simplified diagram of the Ohms Protection circuit.

AC TO DC CONVERTER ⟨1⟩

Figure 6-6 shows a simplified diagram of the Ac To Dc Converter.

Transistors Q200 and Q202 buffer the ac output from the Attenuator. U392 and associated circuitry ac couples and half-wave rectifies the output of the buffer. R398 and C398 filter the rectified voltage. The filtered voltage is proportional to the ac voltage being measured and is supplied to the Analog To Digital Converter. This is an average responding circuit and only indicates rms voltage for pure sinewave voltages.

When the signal from the buffer goes positive, the output of U392 goes negative. This is fed back through C393, CR394, R394, R388, and R387 to pin 2 of U392. When the signal from the buffer goes negative, the output of U392 goes positive. This is fed back through C393, CR393, R395, R388, and R387 to pin 2 of U392. This ac feedback holds pin 2 at 0 volts so both inputs of U392 will be the same voltage (floating ground). The amount of ac feedback, and therefore the gain, is adjusted by R388. The adjustment is correct when the rms voltage of a pure sinewave is indicated by the 851 display. R391, R392, and C391 provide dc feedback. The addition of R390, CR390, and CR391 (see Diagram 1) compensates for a loss of resolution for low-level signals. Resolution is lost because the voltage required to forward bias CR393 and CR394 becomes a significant part of the output of U392. As a worst case, the output of U392 cancels through the dc feedback path without forward biasing CR393 and CR394 at all. The addition of these components forces the output of U393 to forward bias CR390 and CR391 (and therefore CR393 and CR394) before signal cancellation can occur. This removes the diode bias voltage from the measurement.

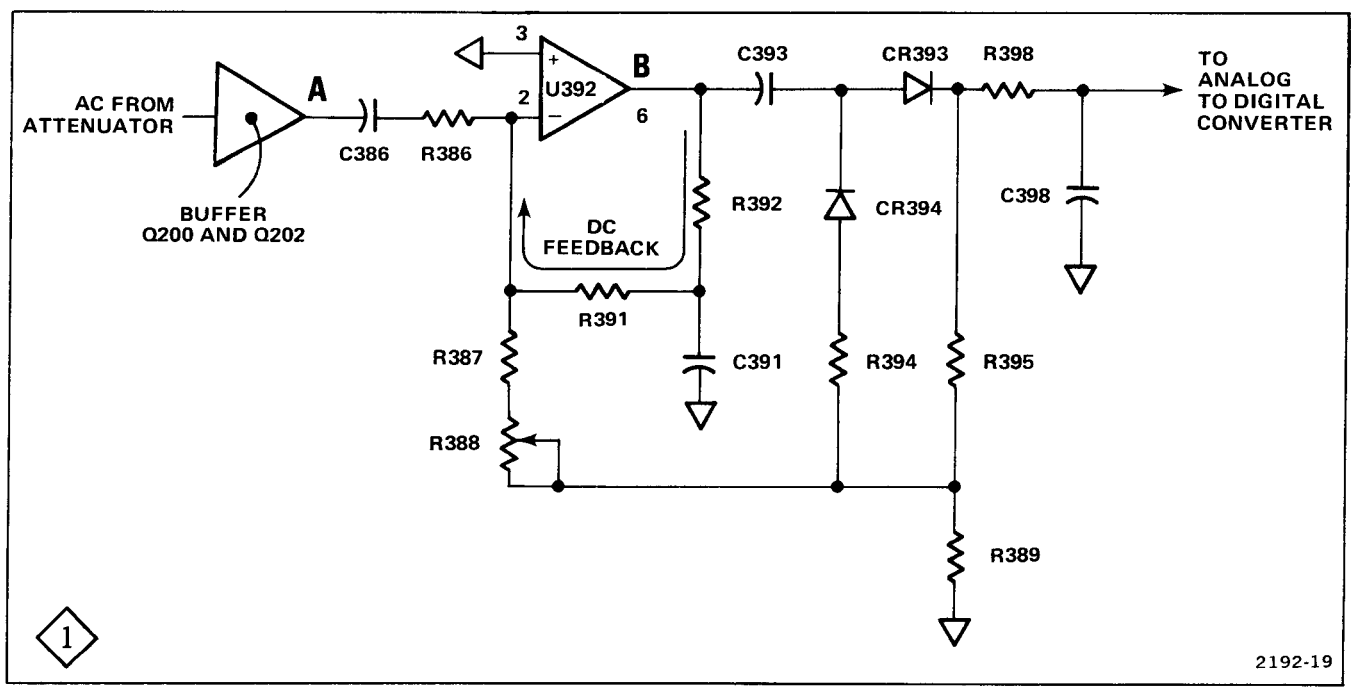

Fig. 6-6. Simplified diagram of the Ac to Dc Converter.

TEMPERATURE CONVERTER ⟨1⟩

Figure 6-7 shows a simplified diagram of the Temperature Converter. With a constant current supplied to the sensing transistor in the temperature probe, its base-to-emitter voltage varies with temperature. The Temperature Converter supplies the constant current to the sensing transistor and senses its base-to-emitter voltage. The voltage sensed is amplified and supplied to the Analog To Digital Converter.

Assume the temperature being measured increases. The following sequence of events occurs:

1. Resistor R474 sets the approximate current in the sensing transistor. The assumed temperature increase causes the base-to-emitter voltage to decrease and tries to increase the current in the sensing transistor. Point A (see Fig. 6-7) moves in a positive direction (less negative). When point A goes less negative, the voltage across R474 increases which increases the current through R474.

2. The positive-going voltage change at point A is supplied to pin 3 of U480 through R475. This causes point C to move in a positive direction. Positive feedback from point C through R_{fb1} and R_{fb2} causes the voltage at point B to move in a positive direction.

The resulting change in the voltage drop across R475 increases the current through R475. The increase in the current through R475 is the same as the increase in the current through R474. Therefore the current through the sensing transistor does not change.

3. The voltage at point C is proportional to the temperature at the sensing transistor. This voltage is supplied to the Analog To Digital Converter. The gain adjustment adjusts the resistance of R_{fb1}. The adjustment is correct when the voltage at point C changes 10 mV/°C. The offset adjustment adjusts the offset current for the circuit. The offset adjustment is correct when the voltage at point C is 0 volts at 0°C.

DUTY FACTOR AND PEAK CONVERTERS

These converters are described under Counter Input.

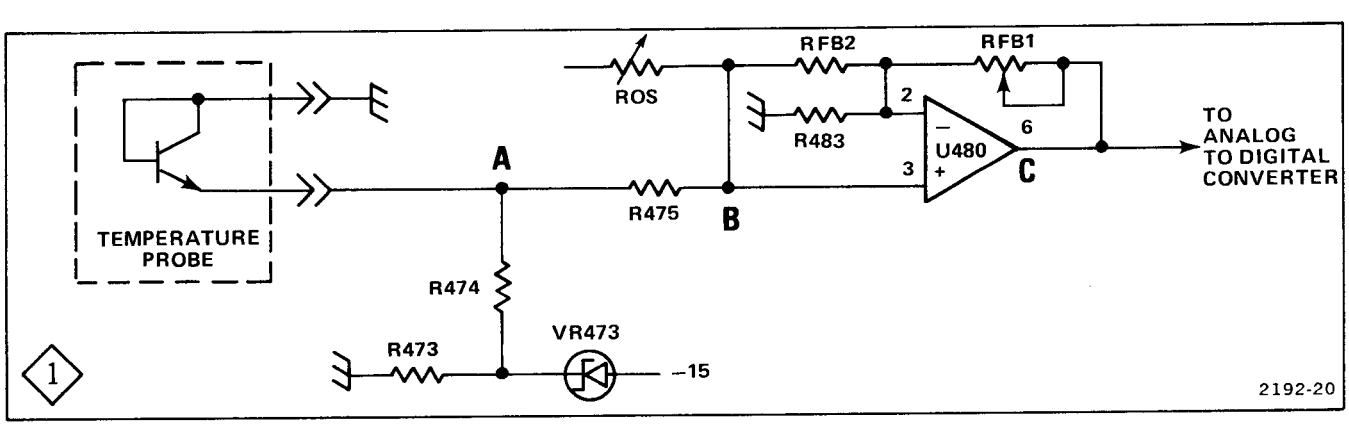

Fig. 6-7. Simplified diagram of the Temperature Converter.

ANALOG TO DIGITAL CONVERTER ⟨2⟩

The portion of Fig. 6-3 enclosed in dashed lines shows a block diagram of the Analog To Digital Converter. After the following brief description of the overall operation of the circuit, each block will be described in detail.

Figure 6-8 shows a timing diagram of the signals generated in the Analog To Digital Converter. The Analog To Digital Converter uses the dual slope method of converting the dc voltage from one of the inputs to digital information. This circuit has three modes or intervals of operation. During the Auto-Zero interval, the input is grounded and an equilibriam is established. During the signal integrate interval, a charge proportional to the measurement being made is added to the integrating capacitor. During the reference integrate interval, this charge is removed at a known rate. Therefore, the discharge time is proportional to the measurement. During the discharge time the Counter circuit counts clock pulses. At the end of the discharge time, the accumulated count is latched into the Display. Therefore the value of this count also is proportional to the measurement.

Low Pass Filter

Figure 6-9 shows the Low Pass Filter. This circuit filters voltages applied to the Analog To Digital Converter. The filter rejects signals above about 6 Hz.

Any change in the voltage at point A causes a current that is coupled through C411 to the inverting input of U412. U412 causes an opposite change in the voltage at the output of U412 which is coupled through C412 to point B. This cancels the original change and holds the voltage at point B constant.

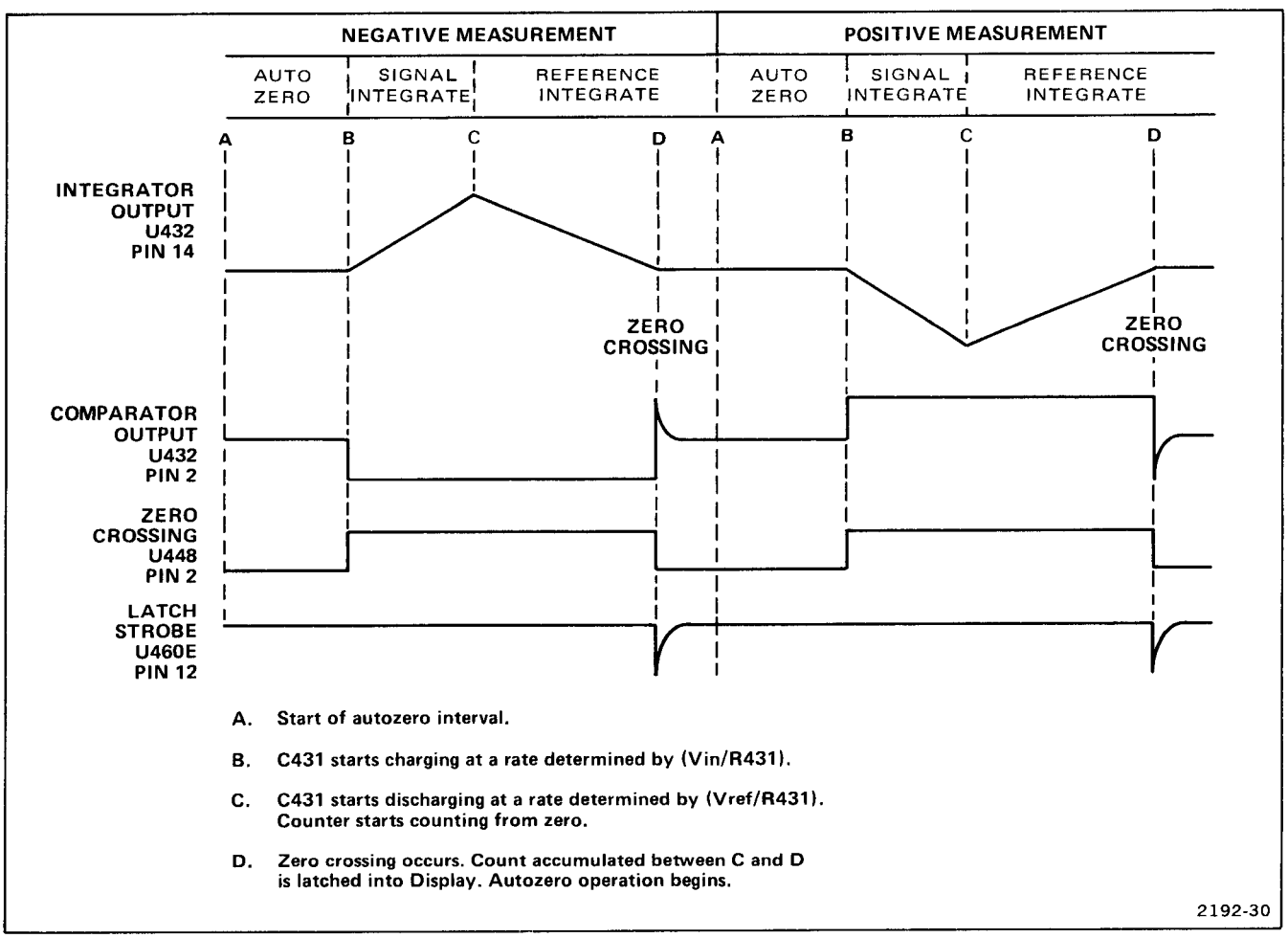

Fig. 6-8. Timing diagram of the signals generated in the Analog to Digital Converter.

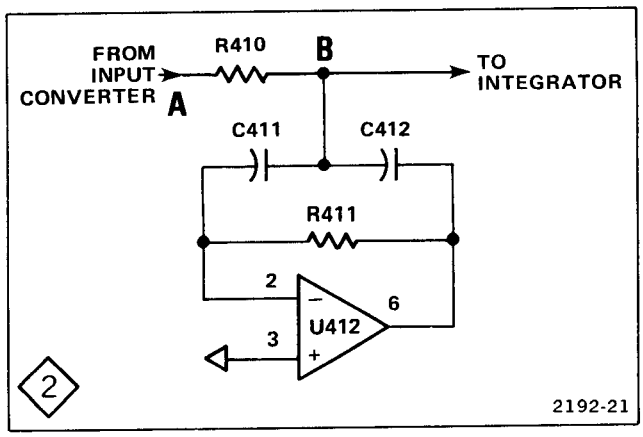

Fig. 6-9. Diagram of the Low-Pass Filter.

Integrator And Comparator

Figure 6-10 shows simplified diagrams of the Integrator And Comparator in each of its three intervals of operation. The Auto-Zero and Signal Integrate intervals are each 10,000 clock pulses long. The Reference Integrate interval is 20,000 clock pulses long. Note that in normal operation, Auto-Zero operation starts before the end of the reference integrate interval. This does not change the length of either the Reference Integrate or Auto-Zero intervals. The following describes circuit operation in detail during each of the three intervals.

AUTO-ZERO INTERVAL. Figure 6-10A shows the Integrator And Comparator during Auto-Zero operation.

During Auto-Zero operation, the State Switching Logic causes switches 1, 2, and 3 to close (within U422). This connects the input to ground and allows an equilibrium to be established as follows:

1. C422 charges to V_{ref} (1 volt) through switches 1 and 2. This voltage is applied to R431 through the buffer amplifier (see Fig. 6-10A).

2. Assume the voltage across C430 is less than the voltage across C422. Since both inputs of the integrating amplifier want to be at the same voltage, the integrator output (pin 14 of U432) starts going more negative. The rate at which pin 14 goes negative is determined by the current charging C431. This current is determined by the voltage drop across R431.

3. When the integrator output goes more negative than the −1.2 volt reference, the comparator output (pin 2 of U432) goes positive. This positive voltage charges C430 through switch 3 and R432.

4. When the voltage across C430 just exceeds V_{ref}, the integrator output starts moving in a positive direction. Pin 14 of U432 is still more negative than −1.2 volts. Therefore the comparator output remains HI and C430 continues to charge.

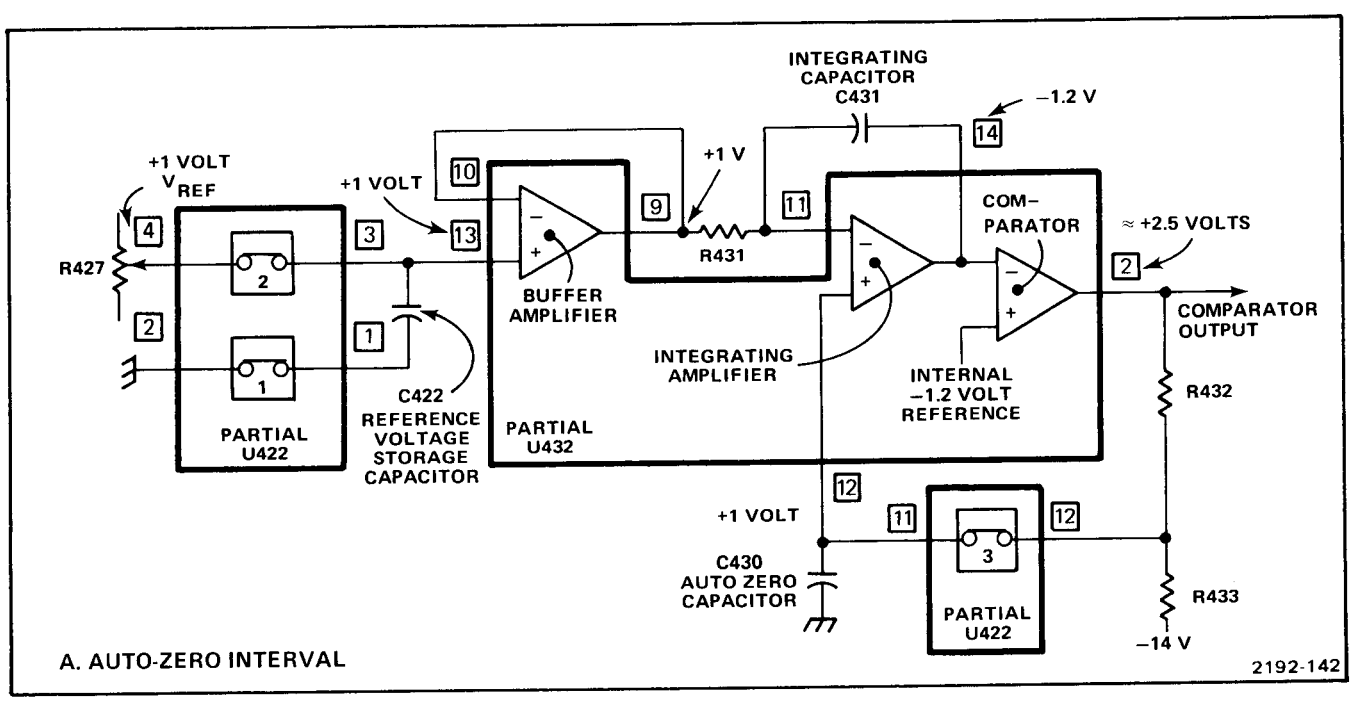

Fig. 6-10A. Simplified diagram of the Integrator and Comparator in the auto zero interval.

When pin 14 of U432 goes slightly less negative than −1.2 volts, the comparator output steps LO. At this instant, the integrator output is at −1.2 volts; the comparator output (pin 2 of U432) steps LO and both inputs of the integrating amplifier are more positive than V_{ref}.

When the comparator output steps LO, C430 starts discharging through R433. As C430 discharges, C431 discharges through R431 to keep the inverting input of the integrating amplifier at the same voltage as the non-inverting input. The integrator output remains constant at about −1.2 volts.

When the voltage across C430 falls to V_{ref}, there will be no voltage across R431 and therefore no current through R431. No charging current will flow into C431. At this instant both inputs of the comparator are at the same voltage. Now the comparator operates as a high-gain amplifier. The comparator output will go to the voltage needed to hold the voltage across C430 at V_{ref} plus any offsets that may occur in the operational amplifiers. The ratio of R432 and R433 requires that the comparator output be about 2.5 volts. This is about half way between a HI and a LO of the following circuitry.

SIGNAL INTEGRATE INTERVAL. Figure 6-10B shows the Integrator and Comparator during the signal integrate interval.

During this interval, the State Switching Logic causes only switch 4 to close (within U422). This connects V_{in} to the buffer amplifier through switch 4 and C422. The following sequence of events occurs:

1. The voltage across C422 is 1 volt (V_{ref}). Assume V_{in} is +0.5 volt. Since no current can flow in C422, pin 13 of U432 is set to +1.5 volts ($V_{in} + V_{ref}$). This sets pin 9 to +1.5 volts also.

2. V_{ref} on C430 sets the non-inverting input of the integrating amplifier to +1 volt. The output of the integrating amplifier will try to hold the inverting input at +1 volt through C431. Therefore the voltage across R431 is equal to V_{in} (+0.5).

3. The voltage across R431 produces a current through R431. This current flows in C431. To keep the inverting input of the integrating amplifier at +1 volt, its output moves in a negative direction as C431 charges. The rate at which C431 charges is determined by the current through R431. Therefore the charge on C431 at the end of the signal integrate interval is proportional to V_{in} which is proportional to the measurement being made.

4. At the beginning of this interval, the Integrator output was at −1.2 volts. When the Integrator output started moving negative, the inverting input of the Comparator was set more negative than the non-inverting input. The Comparator output (pin 2 of U432) went HI. At the end of this interval, this HI is latched into the Polarity Flip Flop.

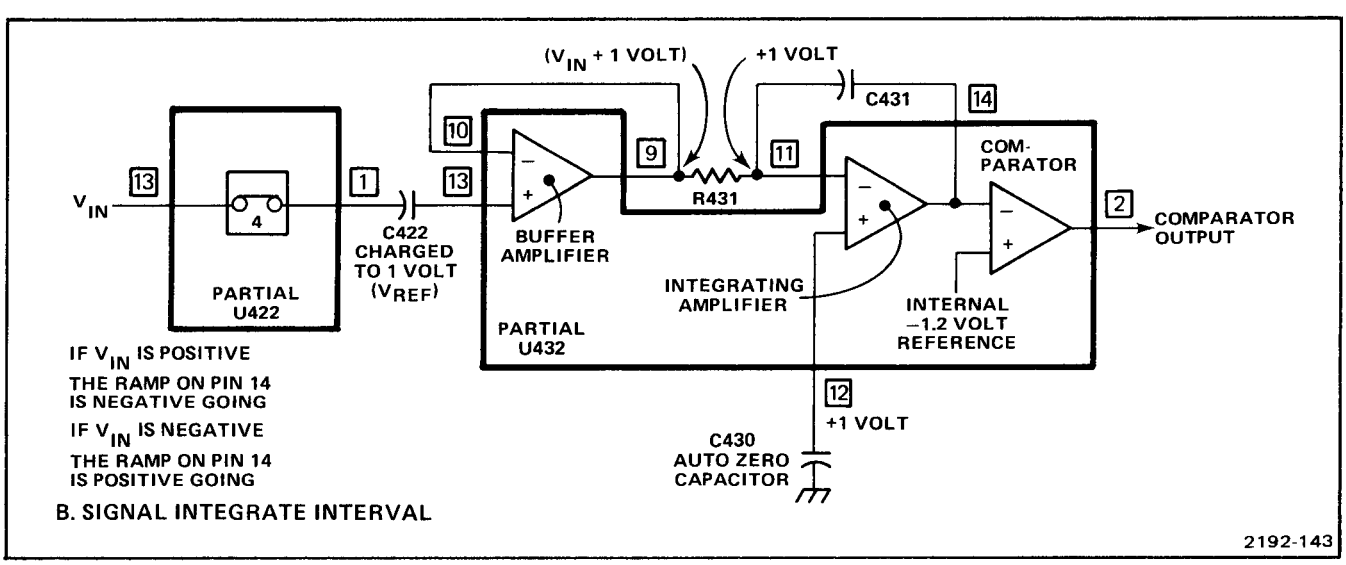

Fig. 6-10B. Simplified diagram of the Integrator and Comparator in the signal integrate interval.

REFERENCE INTEGRATE INTERVAL. Figure 6-10C shows the Integrator and Comparator during the reference integrate interval.

During this interval, the charge on C431 due to V_{in} is removed at a constant rate. This rate is determined by V_{ref} across R431. If V_{in} was positive, switch 6 closes setting pins 13 and 9 of U432 at 0 volts. Since pin 11 of U432 is held at 1 volt, the voltage across R431 is 1 volt. If V_{in} was negative, switch 5 closes setting pins 13 and 9 of U432 at 2 volts (V_{ref} from R427 plus V_{ref} across C422). Since pin 11 is held at +1 volt, the voltage across R431 is one volt but in the opposite direction as when switch 6 is closed.

Assuming V_{in} was +0.5 volt, the following sequence of events occurs:

1. Switch 6 closes at the beginning of the interval. This sets pins 13 and 9 of U432 at 0 volts. The current in R431 is set as described in the preceding paragraph. This current removes the charge on C431 at a constant rate. To hold pin 11 at +1 volt, the Integrator output moves in a positive direction as C431 discharges.

2. When all the charge due to V_{in} is removed from C431, pin 14 of U432 reaches about −1.2 volts. This causes the comparator output to go LO. This LO is supplied to the Zero Crossing Logic.

3. The time it takes to remove the charge due to V_{in} from C431 is proportional to V_{in} and therefore to the measurement being made. During the time the charge is being removed from C431, the Counter is counting clock pulses. When the Comparator output changes states, the accumulated count is latched into the Display and Auto-Zero operation begins. Auto-Zero operation continues during the remainder of the reference integrate interval (until the count in the Counter reaches 20,000) and during the Auto-Zero interval.

Polarity Flip Flop

The Polarity Flip Flop (U448B, see Diagram 2) is a D flip flop. At the end of the signal integrate interval a signal from the State Counter clocks U448B. When this happens the state of the Comparator output is transferred to the Q output of U448B. The Comparator output is HI if V_{in} is positive and LO if V_{in} is negative.

The State Switching Logic uses the Q and $\overline{Q}$ outputs of U448B to determine which of the switches within U422 to turn on during the reference integrate interval (see State Switching Logic).

The Display circuit uses the Q output of U448B to determine if the plus or minus sign should be displayed.

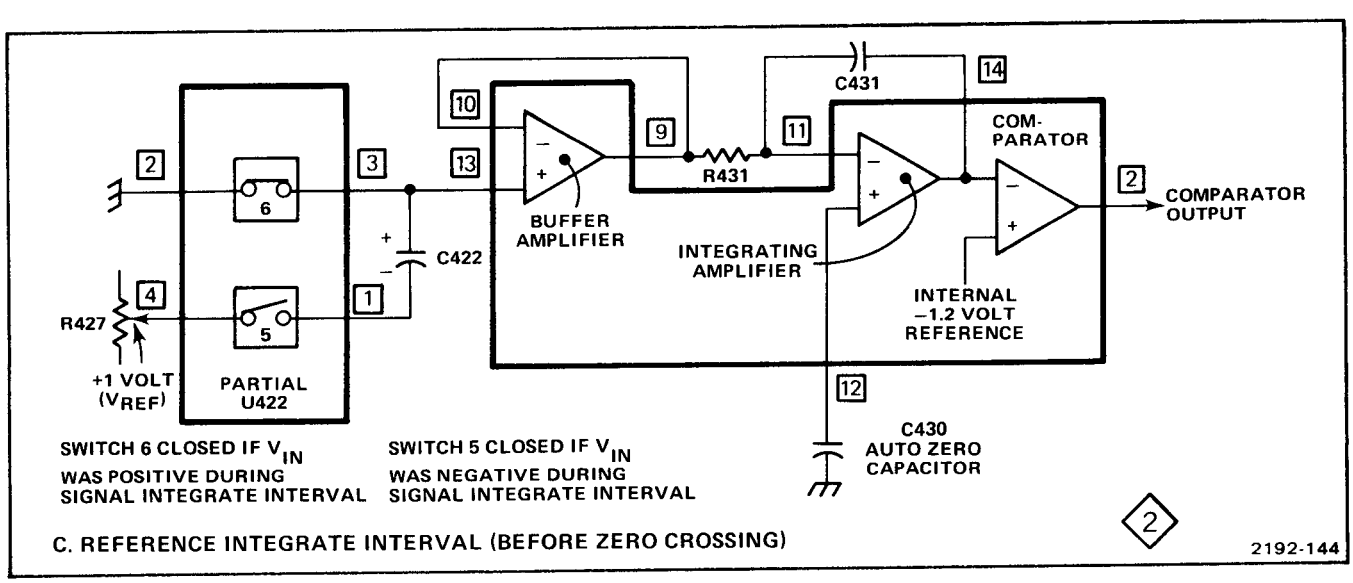

Fig. 6-10C. Simplified diagram of the Integrator and Comparator in the reference integrate interval.

Zero Crossing Logic

Figure 6-11 shows the Zero Crossing Logic. This circuit senses when the charge due to V_{in} has been removed from C431 (see Integrator And Comparator Description).

At the beginning of the signal integrate interval, pin 4 of U448A is set HI by the State Switching Logic. This clears U448A setting pin 2 of U448A (the $\overline{Q}$ output) HI.

At the beginning of the reference integrate interval, the state of the Comparator output is latched into the Polarity Flip Flop. Now the Comparator output and the output of the Polarity Flip Flop are the same. Both will be HI for positive measurements or both will be LO for negative measurements. This sets both inputs of U462D to the same level. Therefore the output of U462D will be LO. This LO sets pin 5 of U448A LO through U452C and U452D.

At zero crossing, the Comparator output changes states causing the output of U462D to go HI. This sets the D input of U448A HI through U452C and U452D. On the next clock pulse, U448A changes states. The $\overline{Q}$ output goes LO. This HI to LO transition indicates zero crossing and is supplied to the Latch Strobe Logic, the DMM Clock Logic, the DMM Overrange Logic, and the State Switching Logic.

At zero crossing, the Latch Strobe Logic causes the count in the Counter to be latched into the Display. After the count is latched into the Display, the counter continues to count.

At zero crossing, the DMM Clock Logic delays the next clock pulse supplied to the Counter. This allows enough time to latch the count into the Display before another clock pulse is counted.

At zero crossing, the LO supplied to the DMM Overrange Logic prevents an overrange condition from being sensed at the end of the reference integrate interval.

At zero crossing, the LO supplied to the State Switching Logic starts Auto-Zero operation. Note that this is not the beginning of the Auto-Zero interval. Auto-Zero operation continues for the rest of the reference integrate interval and during the Auto-Zero interval.

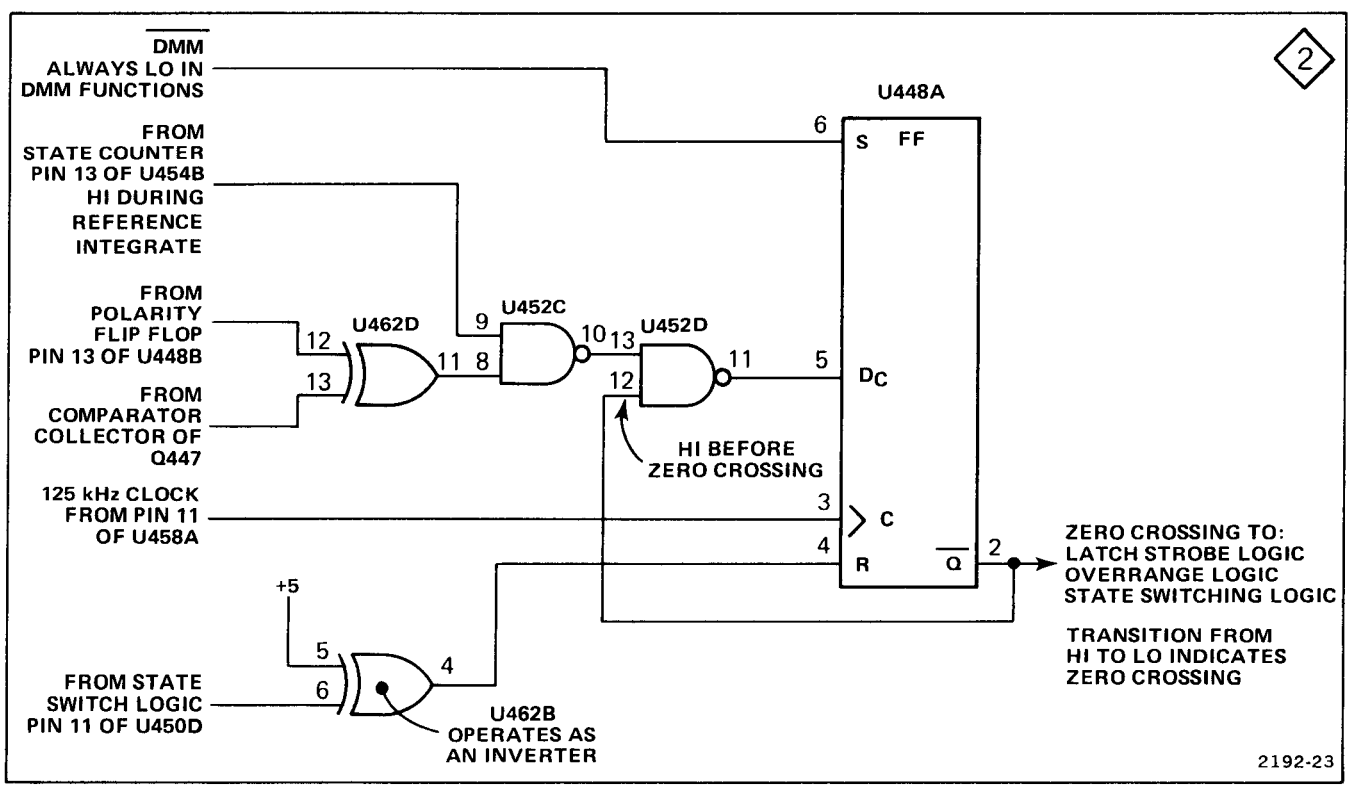

Fig. 6-11. Simplified diagram of the Zero Crossing Logic.

State Counter

Figure 6-12 shows a diagram of the State Counter with a timing diagram.

The State Counter determines the operating interval of the Analog To Digital Converter. The input to this circuit is the carry from the most significant bit in the Counter. The carry occurs every 10,000 counts. Note that Auto-Zero operation begins at zero crossing and not at the beginning of the Auto-Zero interval unless an overrange condition exists.

DMM Overrange Logic

Figure 6-13 shows a simplified diagram of the DMM Overrange Logic with a timing diagram.

This circuit produces a signal which tells the Autorange Logic a DMM overrange condition exists. It also supplies a signal to the Display circuit when either a DMM or Counter overrange condition exists. This signal blanks the Display during the Auto-Zero interval to give the 851 operator a visual indication that an overrange condition exists.

Points A and B are LO at the same time only during the Auto-Zero Interval. This causes point C to go HI. If zero crossing has not occurred by the end of the Reference Integrate Interval, point D will still be HI. Therefore point F will go LO to indicate a DMM overrange. This LO is supplied to the Autorange Logic. At the same time, point E is set LO through U452B and U465A. This LO is supplied to the Display circuit to cause the display to flash.

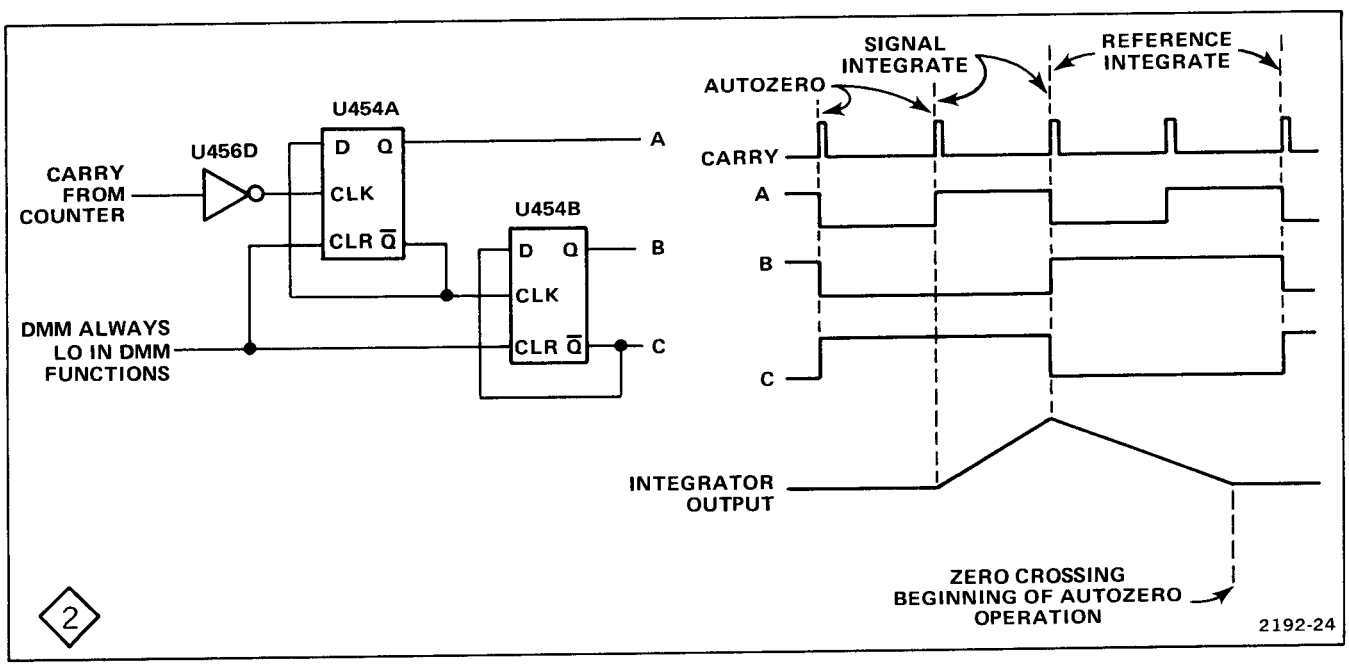

Fig. 6-12. Simplified diagram of the State Counter with a timing diagram.

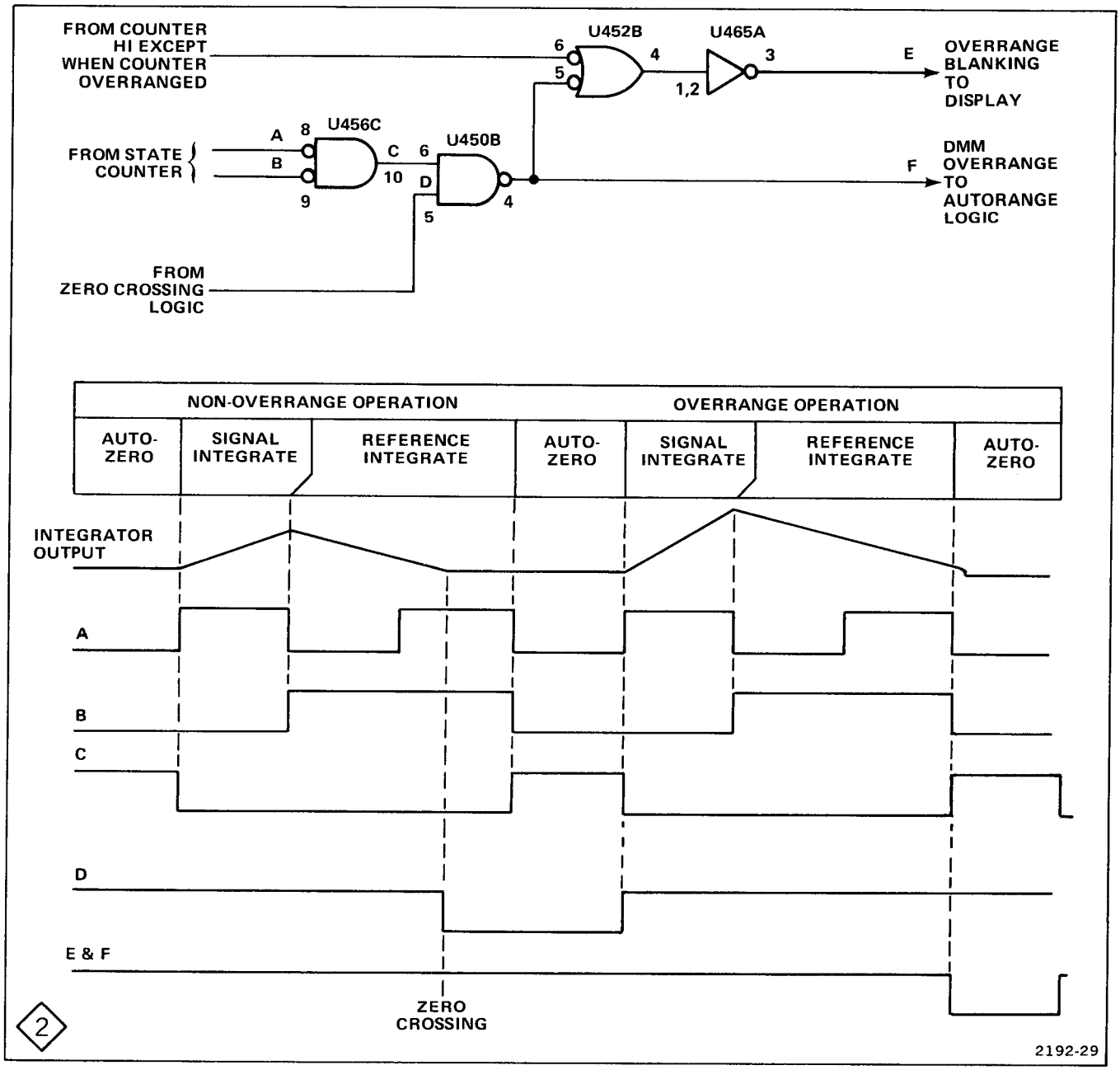

Fig. 6-13. Simplified diagram of the DMM Overrange Logic with a timing diagram.

State Switching Logic

Figure 6-14 shows a simplified diagram of the State Switching Logic with a timing diagram.

This circuit controls solid state switches within U422. These switches control the operating mode of the Analog To Digital Converter. Note that Auto-Zero operation begins at zero crossing. For a description of the three modes of operation, see the Integrator and Comparator description.

The Opto-isolators allow the DMM circuitry to be floated at potentials other than chassis ground.

The circuitry shown to the left of the opto-isolators decodes the two isolator outputs and drives the four inputs to the state switches in U422. U434, U435, CR437, and R437 prevent an overlapping of states which may occur due to differences in propagation delays in the previous circuitry.

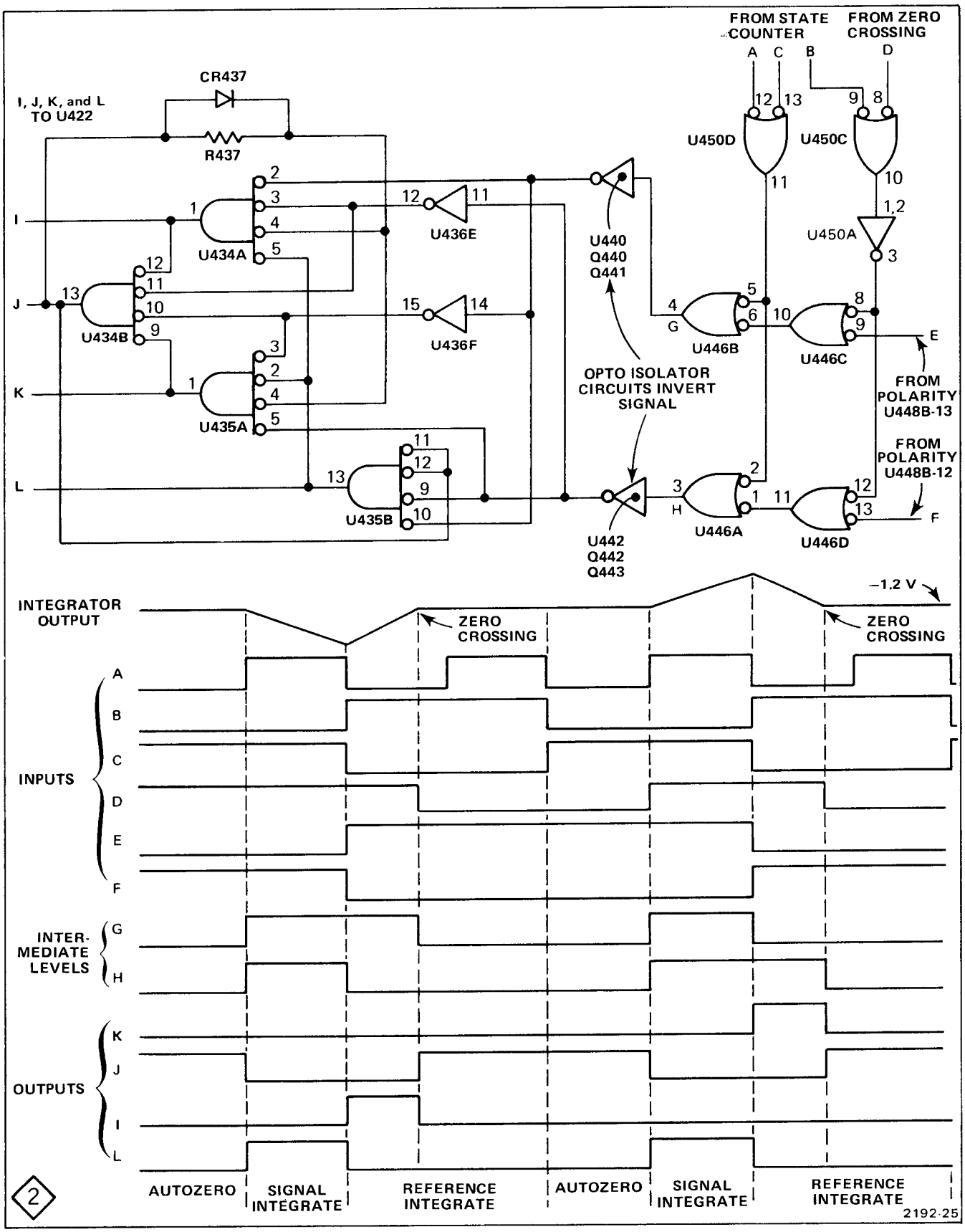

Fig. 6-14. Simplified diagram of the State Switching Logic with a timing diagram.

DMM Latch Strobe Logic

Figure 6-15 shows the DMM Latch Strobe Logic with a timing diagram.

The DMM Latch Strobe Logic produces a pulse which is supplied to the Counter. When this pulse steps LO, the count presently in the Counter is latched into the Display. During the reference interval, both points A and B are HI. When zero crossing occurs, point B steps LO. When the reference integrate interval ends, point A steps LO. When either A or B step LO, the output of U452A steps HI. This is inverted by U456B. The negative-going transition is differentiated through C454 and buffered by U460E. The negative-going pulse at the output of U460E is the DMM latch strobe pulse.

DMM Clock Logic

Figure 6-16 shows a simplified diagram of the DMM Clock Logic with a timing diagram.

This circuit performs two functions. It divides the 1 MHz clock by a factor of 8. It also delays one clock pulse slightly when a latch strobe pulse is generated. This delay allows time for the count to be latched into the display before another clock pulse is supplied to the Counter.

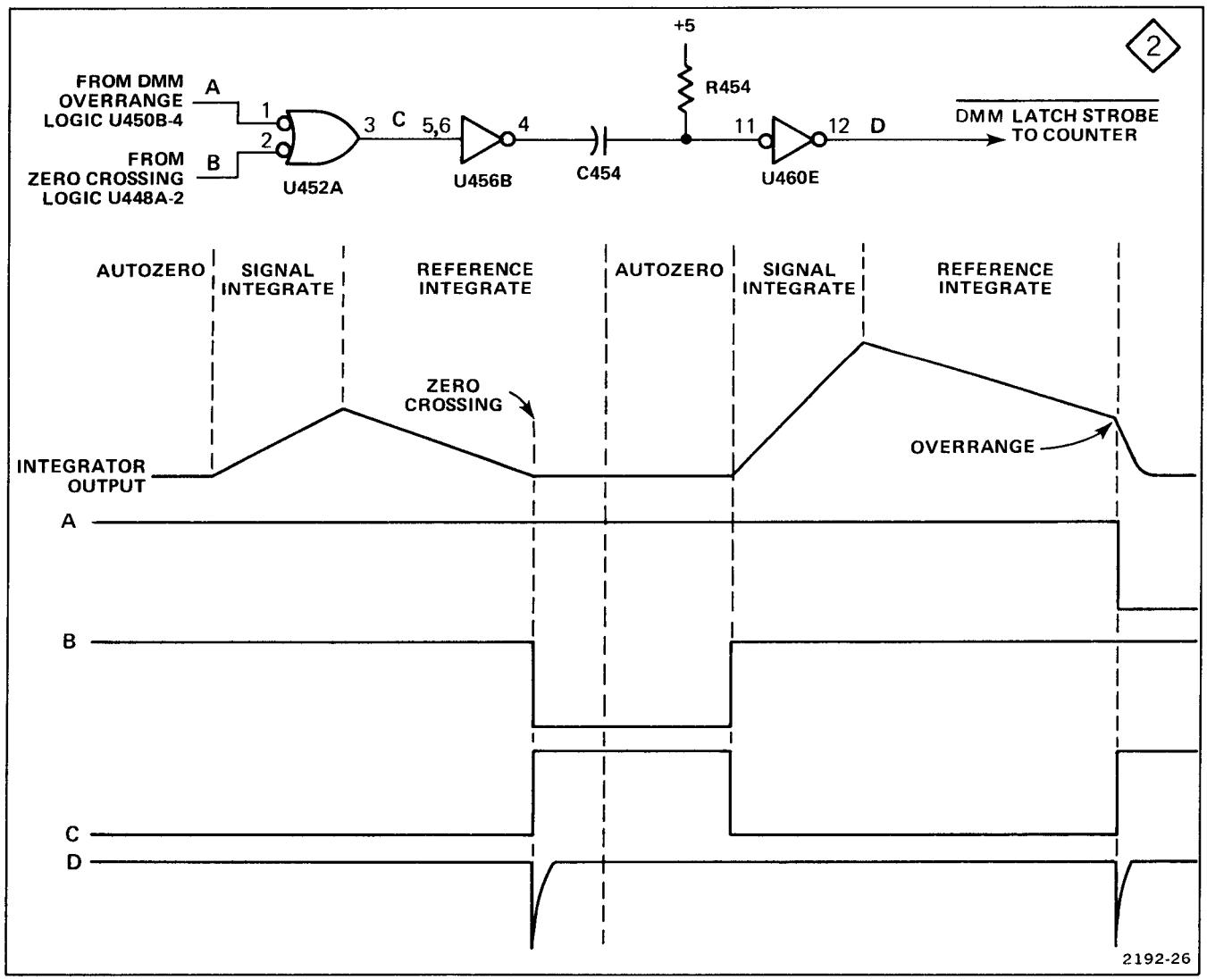

Fig. 6-15. DMM Latch Strobe Logic with a timing diagram.

Pin 8 of U462C (point B) is normally pulled LO through R456. This causes U462C to operate as a buffer. The clock pulses applied to pin 9 of U462C (point C) appears at the output of U462C. This is buffered by U460A and supplied to the Counter.

Because the Zero Crossing Logic is clocked, the signal from the Latch Strobe Logic steps HI at approximately the same time the clock (point C) steps HI. Point B is held HI while C456 charges through R456. While both B and C are HI, the output of U462C is LO. This delays the positive portion of the clock pulse supplied to the counter until C456 charges (until point B is LO). This delay is less than one clock pulse (determined by the time constant of R456-C456).

Due to propagation delays, the signal at point B is delayed slightly from the signal at point C. This causes a slight pulse at the output of U462C when point C steps HI. The filter (R457-C457) prevents this pulse from being supplied to the Counter.

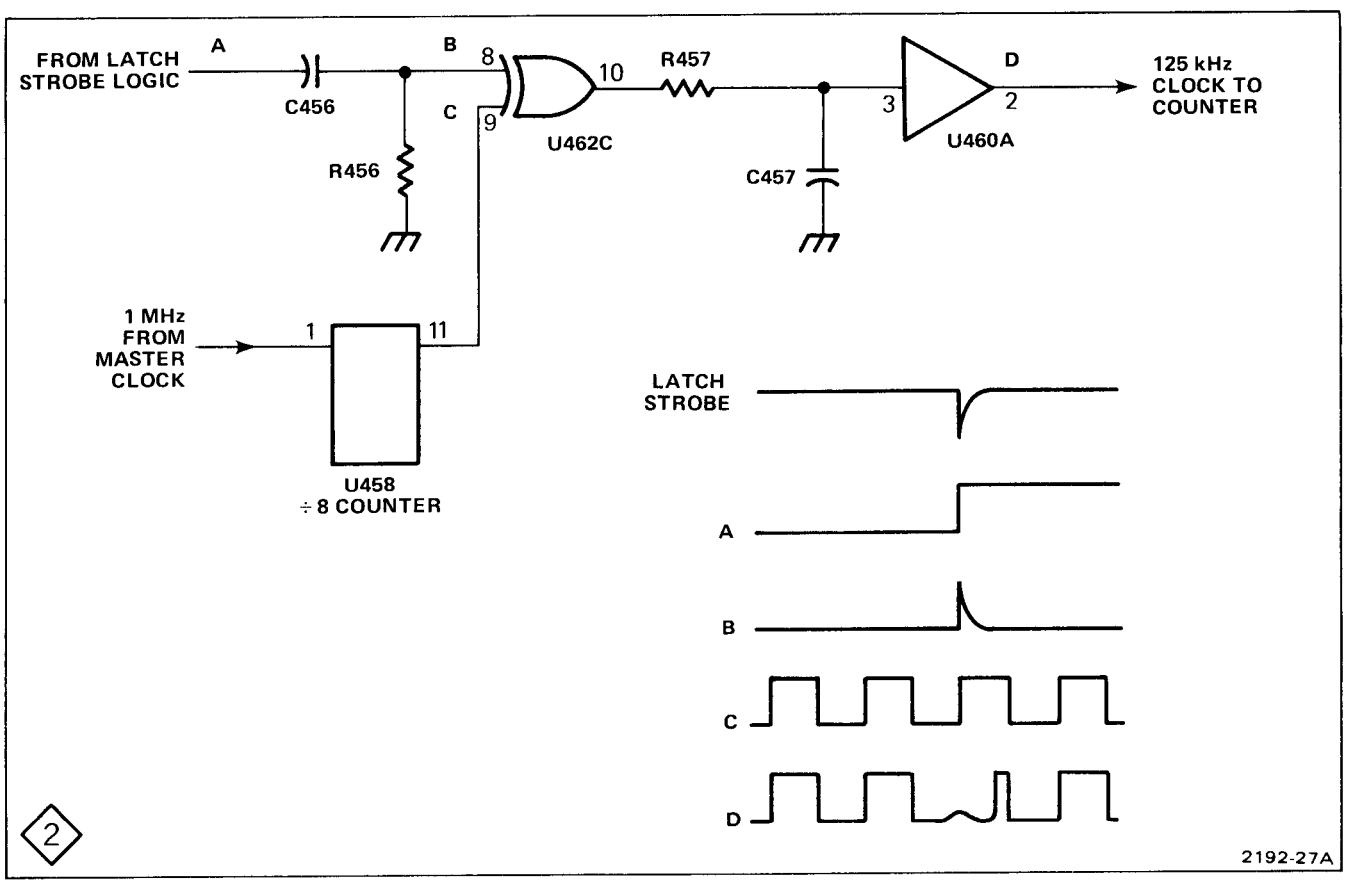

Fig. 6-16. Simplified diagram of the DMM Clock Logic with a timing diagram.

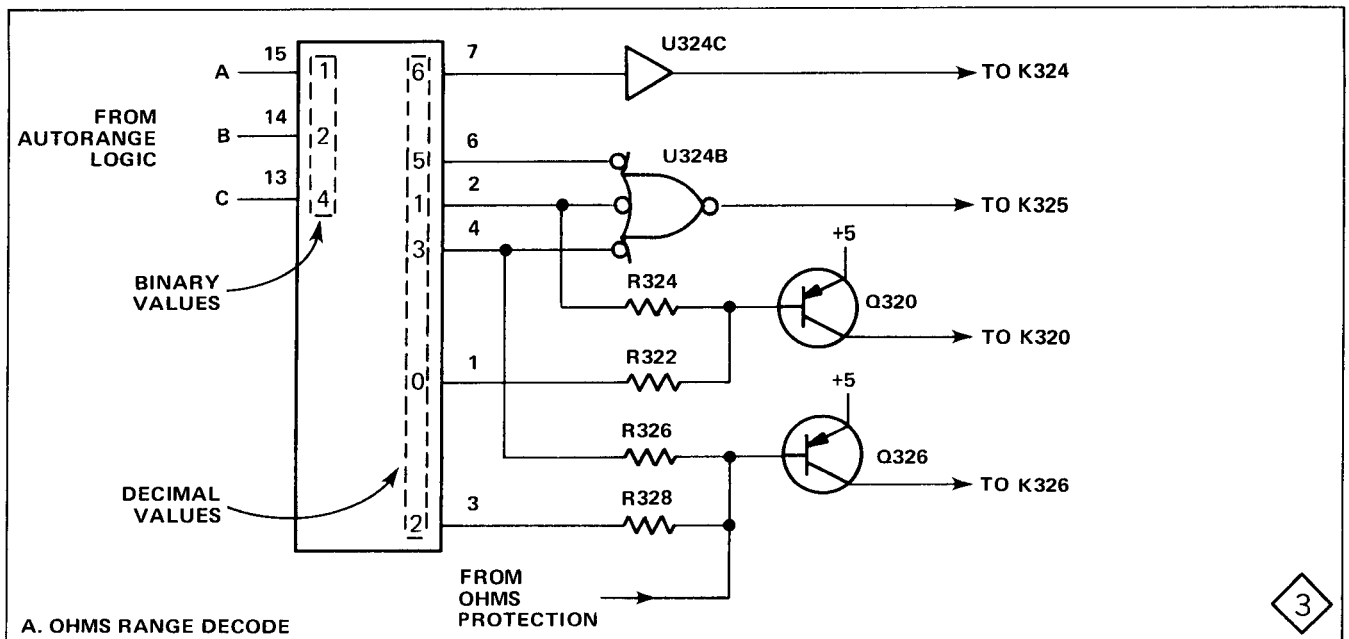

A. OHMS RANGE DECODE

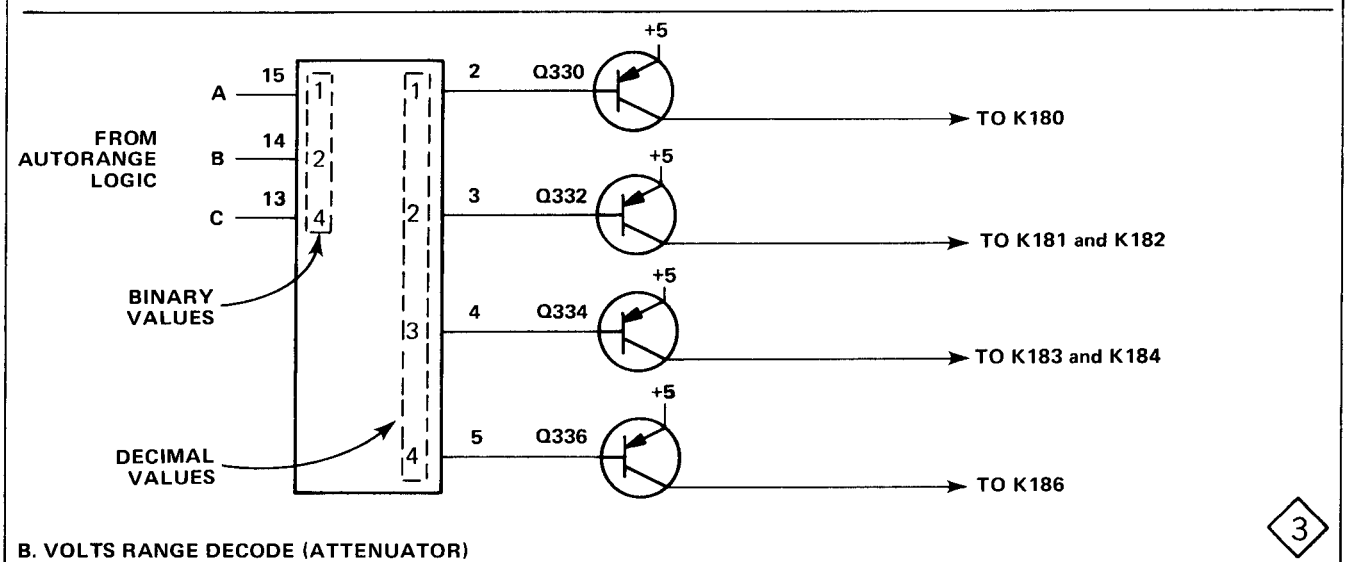

B. VOLTS RANGE DECODE (ATTENUATOR)

INPUTS			RANGE		U320 PINS							OHMS RELAYS[1]				VOLTS RELAYS[1]			
A	B	C	OHMS	VOLTS	1	2	3	4	5	6	7	K324	K325	K320	K326	K180	K181 K182	K183 K184	K186
0	0	0	200 Ω		L	H	H	H	H	H	H			X					
1	0	0	2 kΩ	2 V	H	L	H	H	H	H	H		X	X		X			
0	1	0	20 kΩ	20 V	H	H	L	H	H	H	H				X		X		
1	1	0	200 kΩ	200 V	H	H	H	L	H	H	H		X		X			X	
0	0	1	2 MΩ	500 V dc or 350 V ac	H	H	H	H	L	H	H								X
1	0	1	20 MΩ		H	H	H	H	H	L	H		X						
0	1	1	50 MΩ		H	H	H	H	H	H	L	X							
1	1	1	NOT USED		H	H	H	H	H	H	H								

C. DMM AUTORANGE DECODE TRUTH TABLE

[1]X INDICATES RELAY CLOSED

2192-28A

Fig. 6-17. Simplified diagrams of the DMM Range Decode circuit.

DMM RANGE DECODE ③

Figure 6-17A shows a simplified diagram of the portion of the DMM Range Decode circuit that controls the OHMS range. Figure 6-17B shows a simplified diagram of the portion of the circuit that controls the Attenuator. Figure 6-17C shows a truth table of the inputs and outputs of the circuit.

The three inputs to this circuit come from the Autorange Logic circuit. The outputs of this circuit control two sets of relays. One set, shown on diagram 3, controls the OHMS range. The other set, shown on Diagram 1, controls the Attenuator.

ATTENUATOR ①

The Attenuator (R192 and associated circuitry) is shown on diagram 1. This circuit is a frequency-compensated voltage divider. Some of the shunt capacitors adjust to provide the correct attenuation factors at higher frequencies. The attenuation factor is selected by one or more of six relays which are controlled by the Autorange Decode circuit.

CR200 and CR201 provide overvoltage protection by limiting the voltage at the input of the Attenuator to plus or minus 14.7 volts with respect to the DMM floating ground.

COUNTER INPUT

Figure 6-18 shows a block diagram of the Counter Input circuitry. Each of the blocks shown is discussed in detail in the following description.

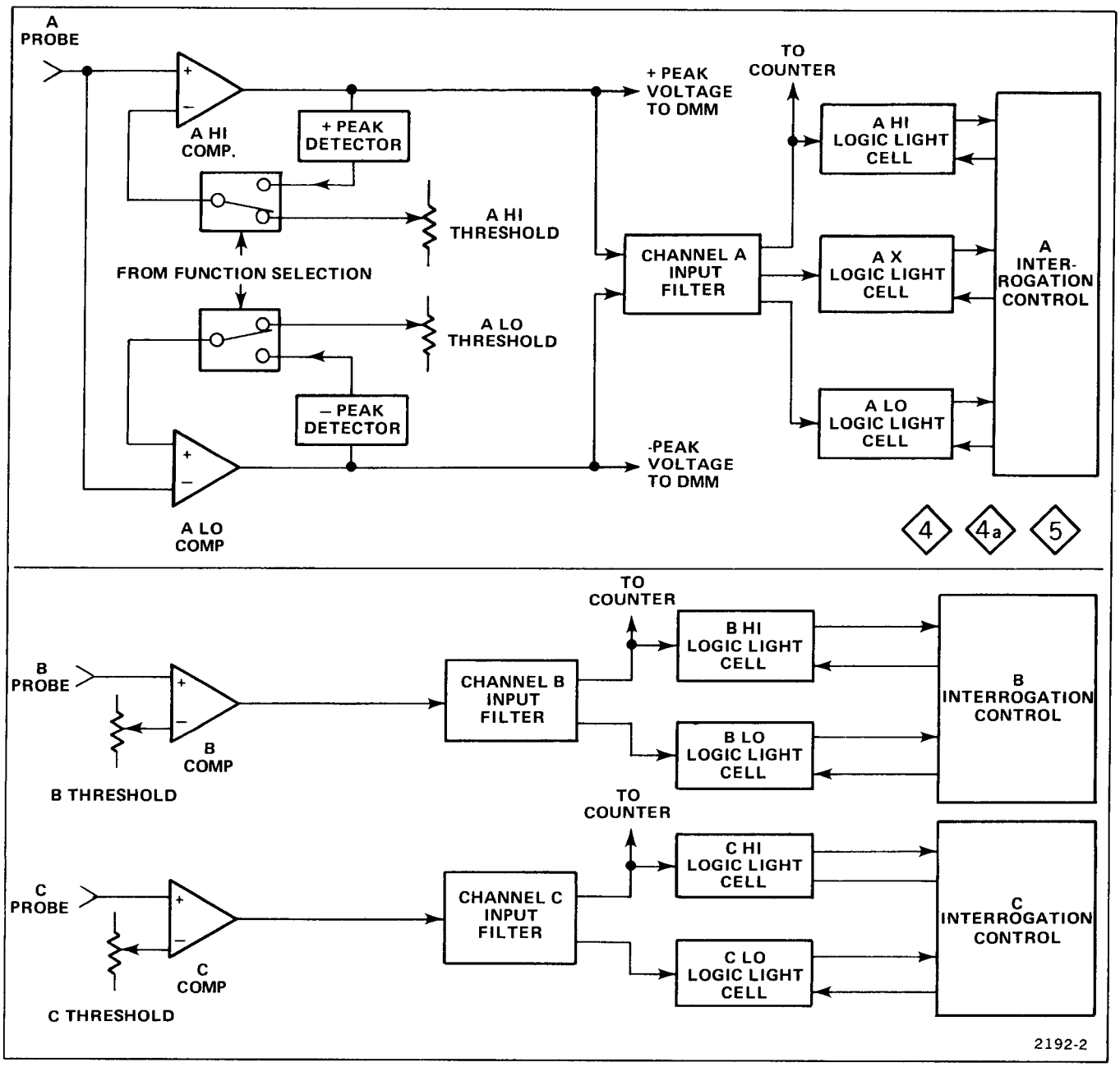

Fig. 6-18. Simplified diagram of the Counter Input Circuitry.

INPUT COMPARATOR CELL ◇4

Figure 6-19 shows a simplified diagram of an Input Comparator Cell. The cell compares the input signal to a dc voltage. Except in the Peak functions, the magnitude of this dc voltage is set by the THRESHOLD control. In the Peak functions, the A Channel comparison voltages are controlled by the input signal (see Peak Detector).

The Cell shown in Figure 6-19 is the A HI Cell. The output of the Cell is HI when the input signal is above the comparison voltage. The A LO Cell differs from the A HI Cell because its output is HI when the input signal is lower than the comparison voltage. The Channel B and Channel C Input Comparator Cells are similar to the A HI Cell.

Input Amplifier And Comparator

Source follower Q16A buffers the input signal while Q16B buffers the dc comparison voltage.

The input signal and the comparison voltage are compared at pins 10 and 9 of U34B. When the input signal goes more positive than the comparison voltage, pin 6 of U34B goes LO and pin 7 goes HI. U34A and U34C both invert the signal applied to their inputs. Therefore, when pin 6 goes LO and pin 7 goes HI, pin 14 goes LO and pin 15 goes HI.

Schmitt Trigger

Differential amplifier U138A is connected as a Schmitt trigger. The Schmitt trigger provides wave shaping. The output of U138A is applied to the Input Filter circuit.

The outputs of all the Schmitt Triggers, except the A LO Schmitt Trigger, are HI when the signal at the probe is more positive than the Threshold voltage. The output of the A LO Schmitt Trigger is HI when the signal at the probe is less positive than the A LO threshold. This is done by reversing pins 14 and 15 of U44C as compared to the other Schmitt Triggers.

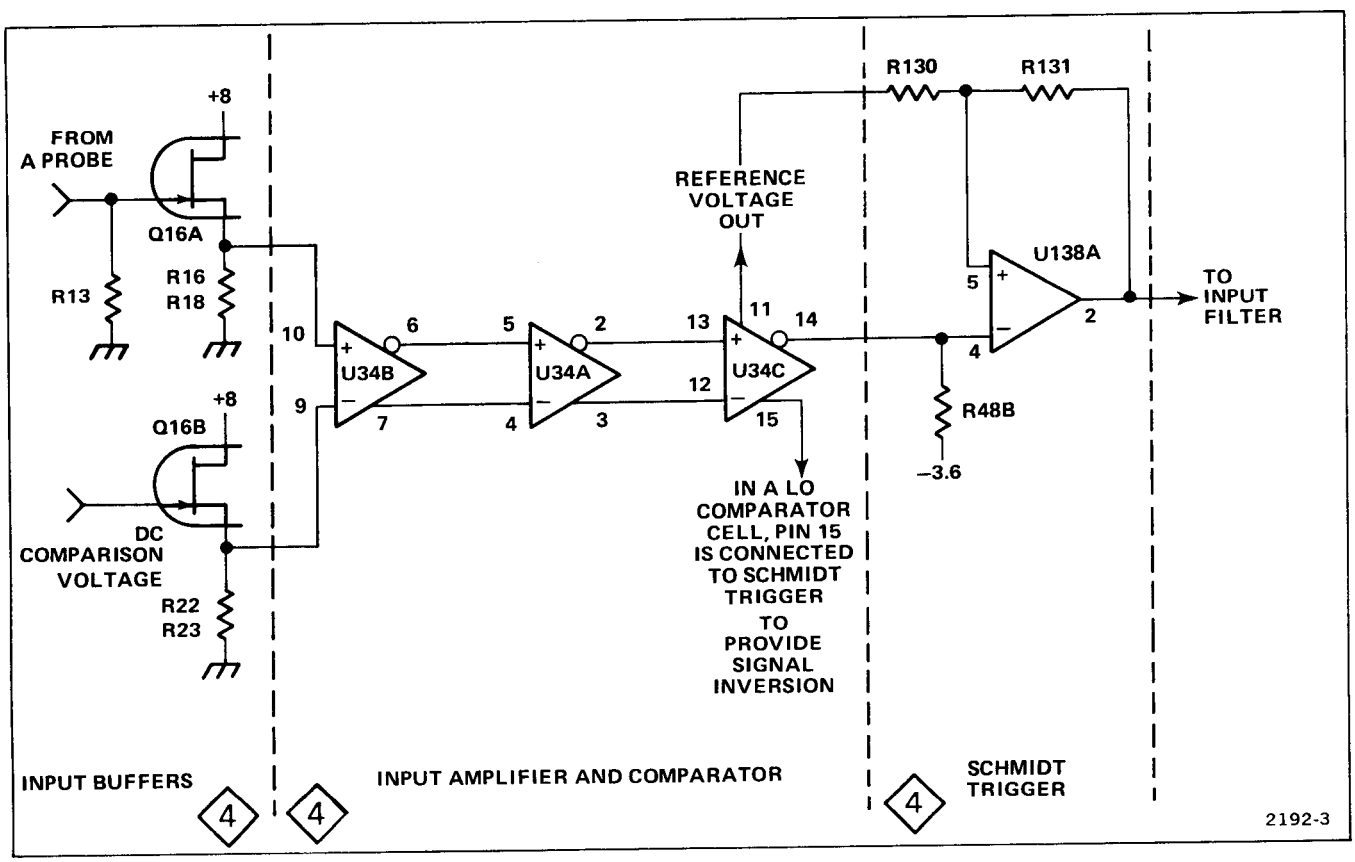

Fig. 6-19. Simplified diagram of an Input Comparator Cell.

INPUT FILTER 5

The Input Filter consists of eight individual cells controlled by two adjustable current sources (one for a group of four cells). Figure 6-20 shows one of the current sources. Figure 6-21 shows the B Negative Filter Cell (the other seven cells are the same).

Current Sources

The Current Sources supply the Input Filter cells with current. Increasing this current causes the filter to pass shorter duration pulses. Figure 6-20 shows one of the Current Sources. The Current Source for the A X (Invalid) and Channel C Filters is the same. The Master Current Source controls the current in the individual Cell Current Sources.

When S169B is in the ON position, the bases of the individual Cell Current Source transistors are grounded. Adjusting R169 adjusts the conduction of Q784B which sets the bias on U781C. The resulting current in U781C is mirrored in the other four transistors in U781. Since all the transistors in U781 are on the same substrate, the current in each transistor should be the same (one fifth of the current in Q784B). Q784A and Q784B are both on a single substrate (see diagram 5). If R782 = R784, Q784A and Q784B should produce the same current for a given setting of R169. When the INPUT FILTER control is set to OFF, R784 and R782 set the currents in Q784A and Q784B. Therefore the individual transistors in U781 should conduct the same current as the individual transistors in U783. The result is that all eight Filter Cells track when R169 is adjusted.

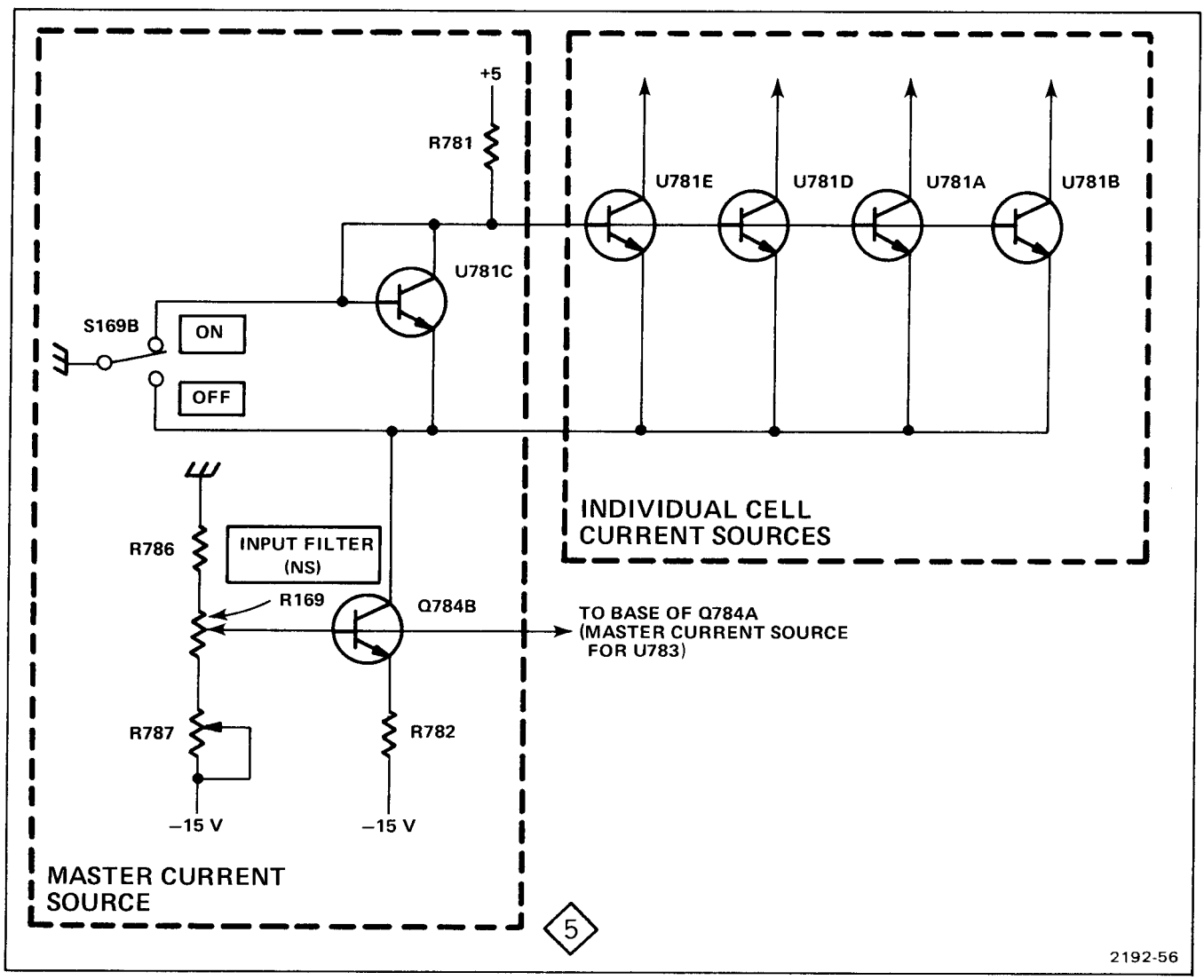

Fig. 6-20. Input Filter Current Source.

Individual Filter Cells

Figure 6-21 shows one of the Channel B Input Filter Cells. The other seven cells are the same. This cell rejects negative-going pulses at the base of Q553 which are shorter than a set time which is adjustable.

The circuit shown in Fig. 6-21 operates as follows:

1. Under no signal conditions (LO at the Channel B probe), point A (the base of Q553) is LO. The current in Q553 is determined by the current source (U781B).

2. Assume the signal at the probe tip steps HI. When this happens, the base of Q553 steps HI which turns Q553 on harder. The additional current rapidly charges C552. When C552 becomes charged, the only current flowing in Q553 will be that provided by the current source (U781B).

3. Now assume point A steps LO. This turns off Q553. Point B starts going less positive as C552 discharges. The discharge rate of C552 is determined by the current source (U781B). As point B goes less positive, pin 5 of U560B goes less positive through emitter follower Q554. When C552 discharges sufficiently, U560 senses a LO at pin 5 and the output flip-flop is triggered.

4. If the pulse at A steps HI before C552 discharges sufficiently, pin 5 of U560B doesn't sense a LO. The pulse is ignored.

5. The length of time it takes to discharge C552 is determined by the Current Source (assuming the value of C552 and the TTL LO threshold of U560B remain constant). More current causes C552 to discharge more rapidly allowing shorter-duration pulses to be sensed.

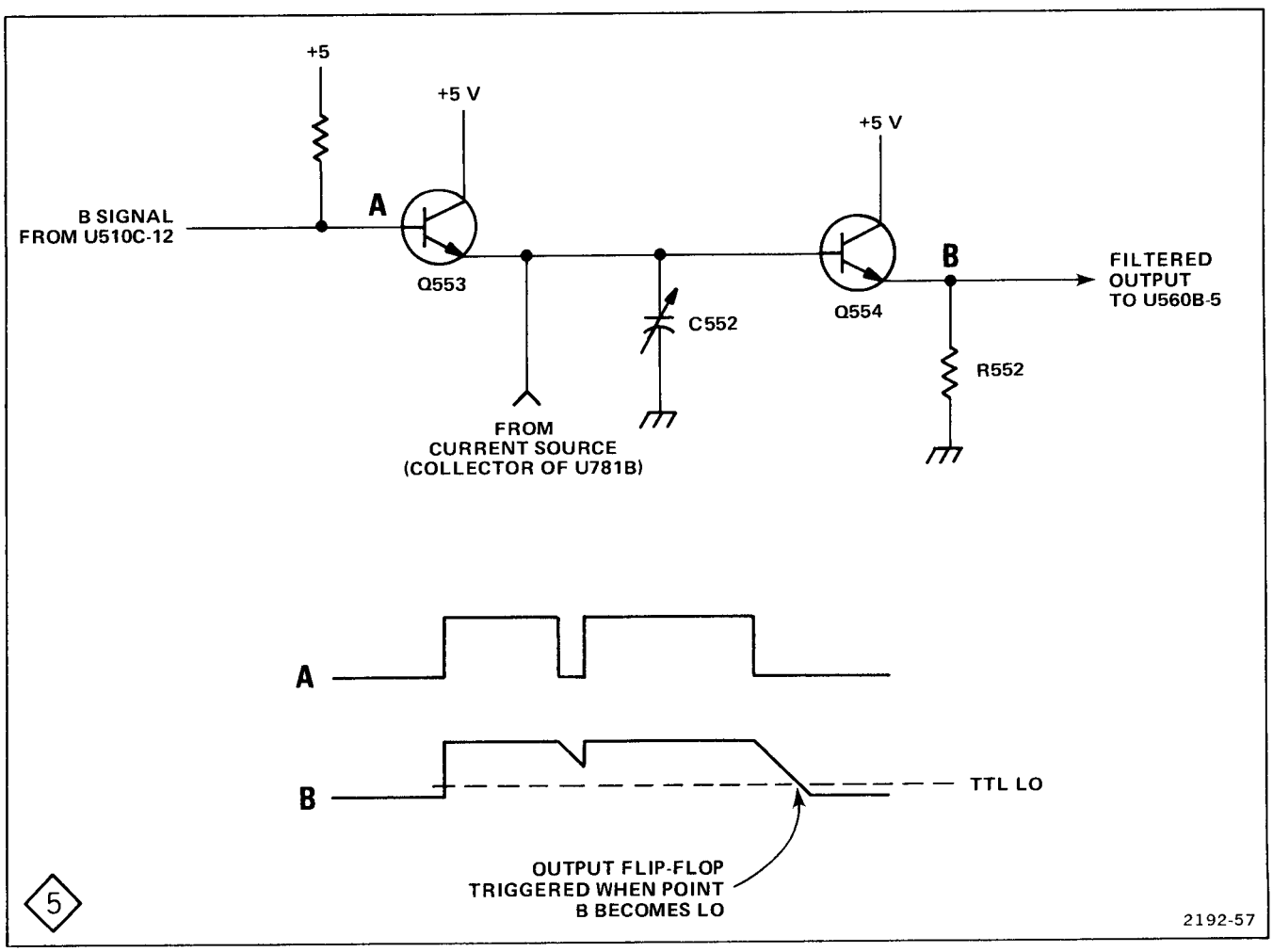

Fig. 6-21. Channel B negative edge Input Filter Cell.

When the Input Filter is turned off, the emitter of U781C is grounded and the current from the Current Source is maximum. The value of this maximum current is dependent on the value of R782 and is more than Q784 can supply. Setting this current to maximum has two effects. First it provides a lot of current to rapidly discharge C552. It also increases the junction capacitance of Q553. At high current, this junction capacitance is greater than the capacitance of C552. A change on the base of Q553 is rapidly coupled to point B through the junction capacitance. Therefore, very short duration pulses at point A are sensed at pin 5 of U560B.

Overall Channel B Input Filter Operation

Figure 6-22 shows an overall block diagram of the Channel B Input Filter with a timing diagram. The Channel C Input Filter is the same. Note that both Filter Cells are fed positive signals and discriminate against negative-going signals. Therefore a positive-going step at W appears as a LO at point X after a delay, and a negative-going step at W appears as a LO at Y after a delay. These two delays should be the same if the current sources are operating correctly and the capacitances are correctly adjusted. Pulses with durations less than this delay are ignored.

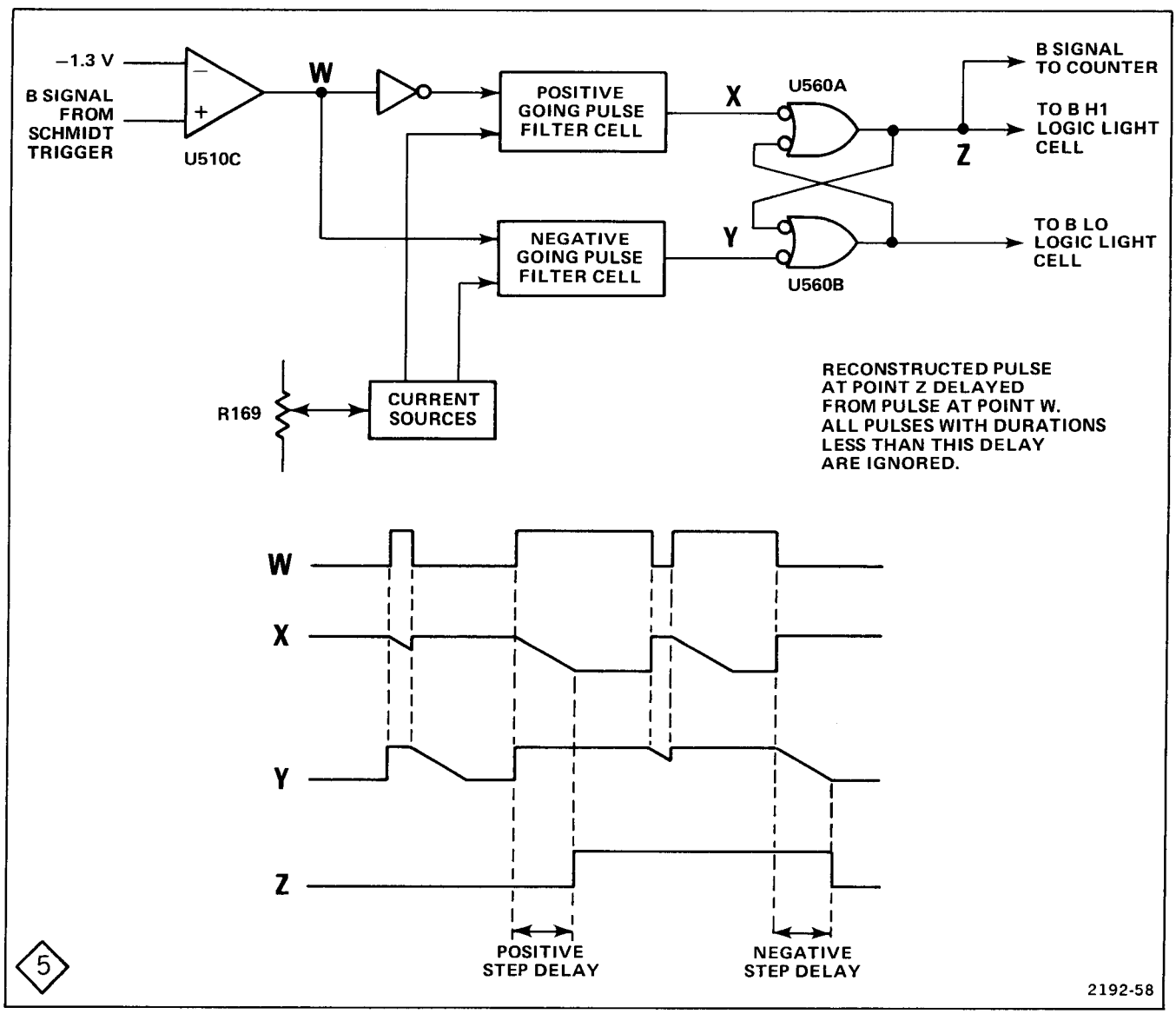

Fig. 6-22. Overall block diagram of the Channel B Input Filter.

The flip-flop (U560A and U560B) reconstructs the signal applied to point W. Note that the reconstructed pulse is delayed from the pulse at point W. If the delays of the two Filter Cells are different, the reconstructed pulse duration will be different than that of the input signal. This is a possible source of measurement error. The durations of the delays are dependent on supplying each filter cell with the same current (see Current Sources). The capacitors in all the Filter Cells except the A X (Invalid) Filter Cells, are adjustable to compensate for small differences in current and differences in stray capacitance. The A X (Invalid) Filter Cells do not have adjustable capacitors since the only circuit its output drives is the A X (Invalid) Logic Light Cell. Exact timing of this circuit is not important.

Overall Channel A Input Filter Operation

Channel A Input Filter operation is similar to B and C Input Filter Operation. Only the differences will be discussed here. The basic difference is the Channel A Input Filter has two inputs (A HI and A LO) while the B and C Input Filters have only one input each. Figure 6-23 shows an overall block diagram of the A Input Filter.

The signal at pin 13 of U512D is HI when the signal at the A probe is HI (above the A HI THRESHOLD setting) and LO when the signal at the A probe is LO (below the A LO THRESHOLD setting). The signal at pin 1 of U512A is the complement of the signal at pin 13 of U512D. The signals on pin 1 of U512A and pin 13 of U512D are filtered in the same manner as described above (under Overall Channel B Input Filter Operation). The filtered, reconstructed representation of the signal at the A probe appears at pin 11 of U560D.

The Channel A X (Invalid) Filter senses the outputs of the A HI and A LO Input Comparators through U512C. The output of U512C is HI only when the signal at the A probe is neither HI nor LO (when the outputs of the A HI and A LO input Comparators are both LO). The output of U512C is filtered and reconstructed at pin 3 of U565A. The reconstructed pulse is HI only when the signal at the A probe remains invalid for a time longer than the delay of the Input Filter.

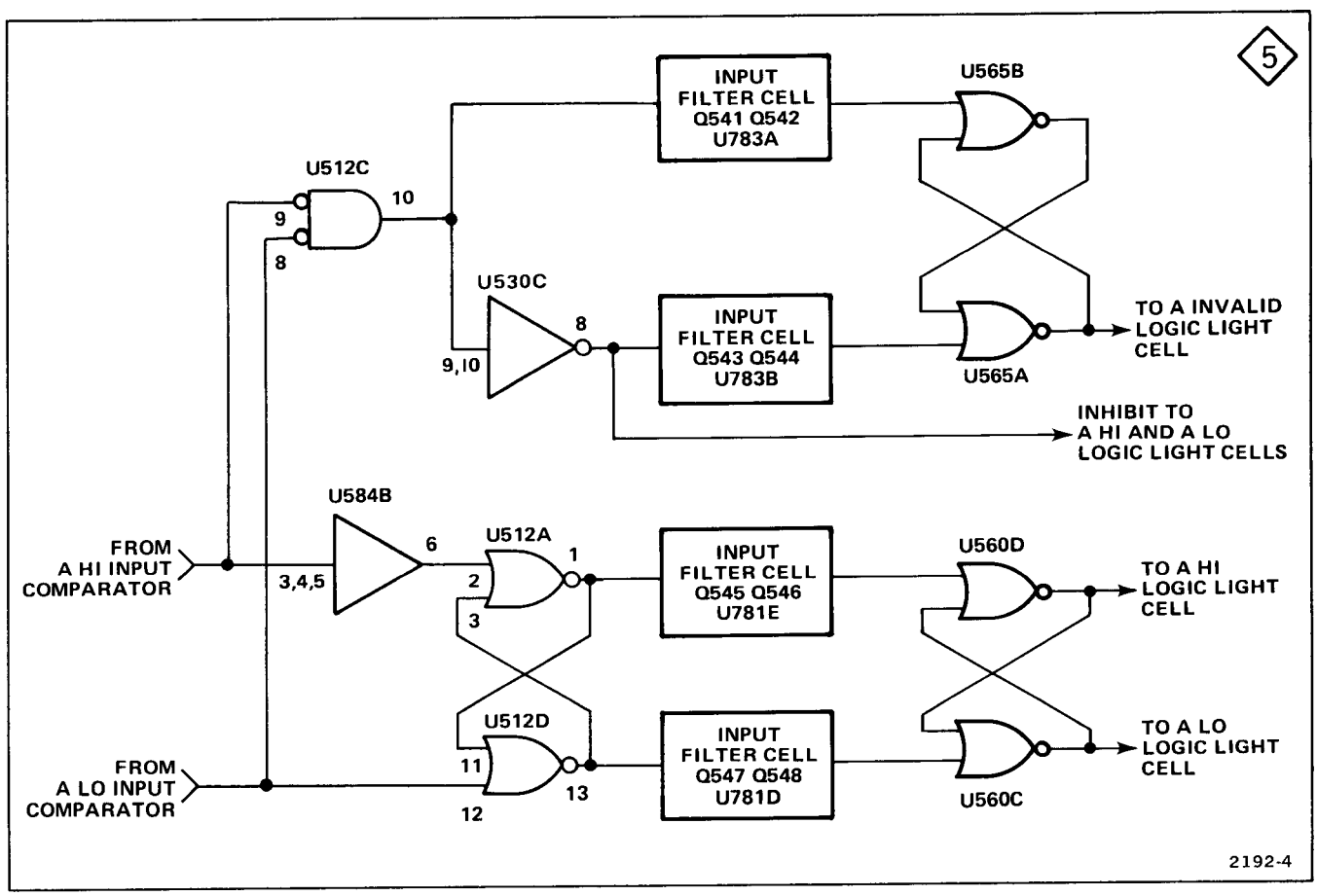

Fig. 6-23. Overall block diagram of the Channel A Input Filter.

SLOPE SWITCHES 6

The SLOPE switches (S291, S292, and S293) and associated circuitry are shown on diagram 6. Each of the SLOPE switches controls one input of an exclusive OR gate (U570B, U570C, and U570D). When a SLOPE switch sets one input of the corresponding gate HI (POS setting), the gate inverts the signal applied to its other input. When a SLOPE switch sets one input of the gate LO (NEG setting), the gate acts as a buffer (no inversion).

DELAY LINE 6

The Delay Line consists of U520 and U522 (see diagram 6).

There is a possibility that the propagation delays in B and C channels will add to cause a timing error. To compensate for this, the signal of the faster channel can be passed through some, or all, of the gates in U520 and U522. The additional propagation delays add to minimize the time difference between the channels.

LOGIC LIGHTS 5

The Logic Lights indicate the state of the input signals with respect to the voltages set by the THRESHOLD controls. The following discussion describes the individual circuits controlling the Logic Lights, then describes how the individual circuits work together.

Logic Light Cell

There are seven Logic Light Cells, one for each Logic Light. Figure 6-24 shows a simplified diagram of the A HI Logic Light Cell. Five of the other cells are the same. The A Invalid circuit differs slightly (see A Logic Light Overall Operation). The inputs of the Logic Light Cells are driven by the outputs of the Input Filters. A HI at the input of the Logic Light cell indicates the condition which that cell will sense. For instance, when an A HI condition exists, the input of the A HI Logic Light Cell (pin 2 of U580A) will be HI. If the input gate is not inhibited (pins 1 and 13 of U580A HI) the output of U580A steps HI. This turns on Q592A. The collector of Q592A steps LO turning on Q592B. Capacitor C582 rapidly discharges through R592D.

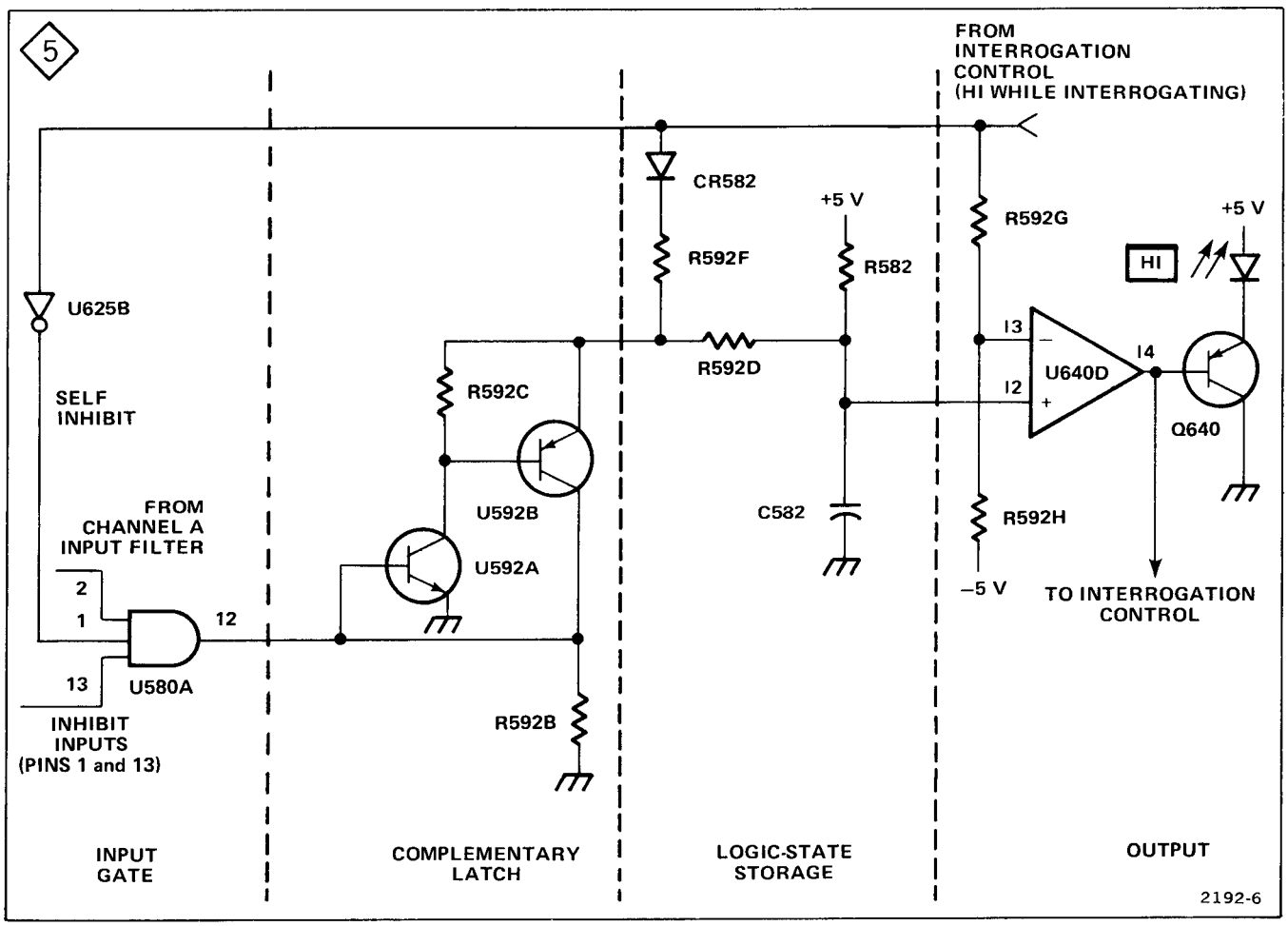

Fig. 6-24. Simplified diagram of the A HI Logic Light Cell.

The current supplied by C582 soon becomes inadequate to keep Q592A and Q592B turned on. They turn off and the charge on C582 is minimum. This minimum charge remains fairly constant. The current supplied through R582 is just enough to overcome the leakage currents through the complementary latch and U640D; it does not add significant charge to C582.

The Logic Light does not turn on until Interrogation Control interrogates the Logic Light Cell. While the Cell is not being interrogated, the signal from Interrogation Control (to R592G) is LO. This sets the inverting input of U640D more negative than the non-inverting input. Therefore, the output of U640D is HI and the A HI Logic Light is off.

When the signal from Interrogation Control steps HI and if the complementary latch has discharged C582, the inverting input of U640D is set more positive than the non-inverting input. The output of U640D goes LO and turns on the A HI Logic Light. The HI from Interrogation Control also starts charging C582 through R592D, R592F, and CR582. While the A HI Cell is interrogated, pin 1 of U580A (an inhibit input) is set LO through U625. This prevents the A HI Cell from sensing an A HI condition while it is being interrogated.

As C582 charges, the voltage on the non-inverting input of U640D approaches the voltage on the inverting input. When the voltage on the non-inverting input goes more positive than the voltage on the inverting input, the output goes HI. This turns off the Logic Light.

When the Logic Light turns off, a HI (from pin 14 of U640D) is sent to Interrogation Control. This causes Interrogation Control to start interrogating the Logic Cells at a 5 kHz rate.

A Interrogation Control

Figure 6-25 shows a simplified diagram of the A Interrogation Control circuit. The function of this circuit is to interrogate the A Logic Light Cells one at a time at a 5 kHz rate. To better understand this circuit, read the Logic Light Cell discussion before reading this discussion.

To describe the operation of this circuit, assume the A HI Logic Light is on. This sets pin 10 of the interrogation start-stop gate (U610) LO. This prevents the 5 kHz clock from passing to the C input of U620A.

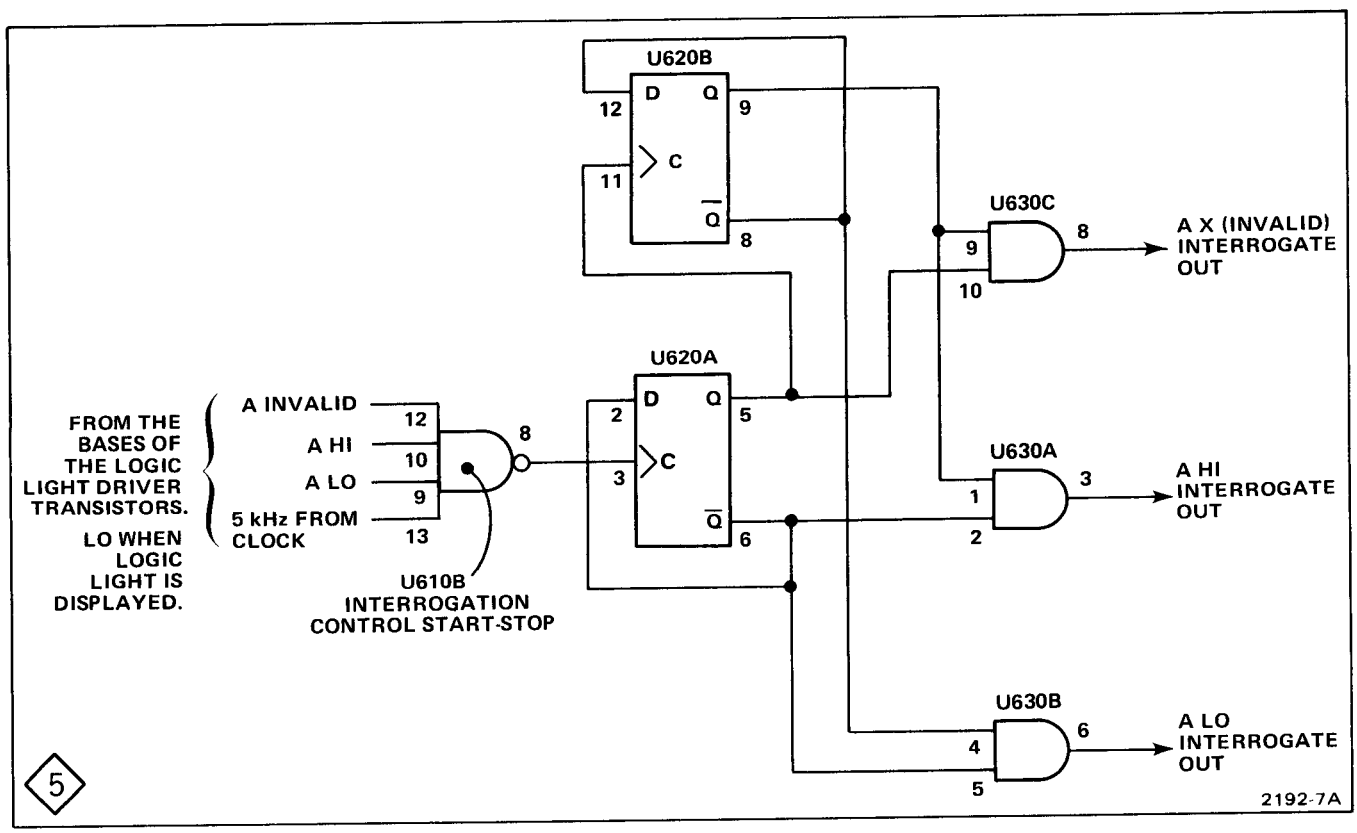

Fig. 6-25. Simplified diagram of the A Interrogation Control circuit.

While the A HI light is on, C582 charges through R592D and R592F (see Fig. 6-24). When C582 charges sufficiently, the Logic Light is turned off. This sets pin 10 of the interrogation start-stop gate (U610B) HI. Now all the Logic Lights are off and three of the inputs of U610B are HI and the 5 kHz clock signal passes to the C input of U620A. These four outputs are supplied to three AND gates. Of the three gates, only one of the outputs will be HI at a time. These HIs are supplied to the Logic Light Cells to interrogate them one at a time.

Interrogation Control will continue to change states at a 5 kHz rate. When a Logic Light Cell (that has sensed and stored a logic state) is interrogated, the corresponding Logic Light will be turned on. When the Logic Light turns on, a LO is supplied to one of the inputs of the interrogation start-stop gate (U610B). This blocks the clock from

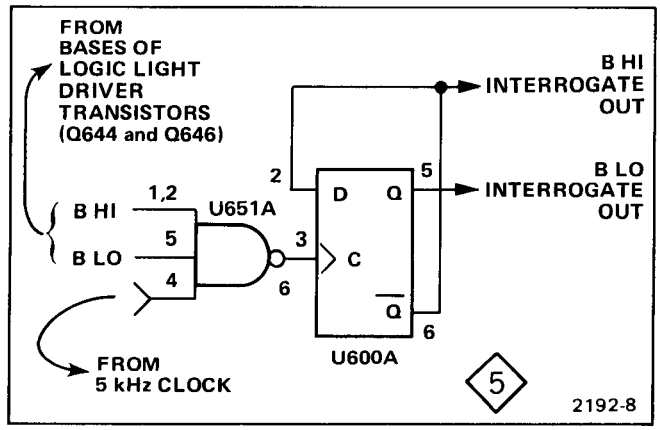

Fig. 6-26. Simplified diagram of the B Interrogation Control circuit.

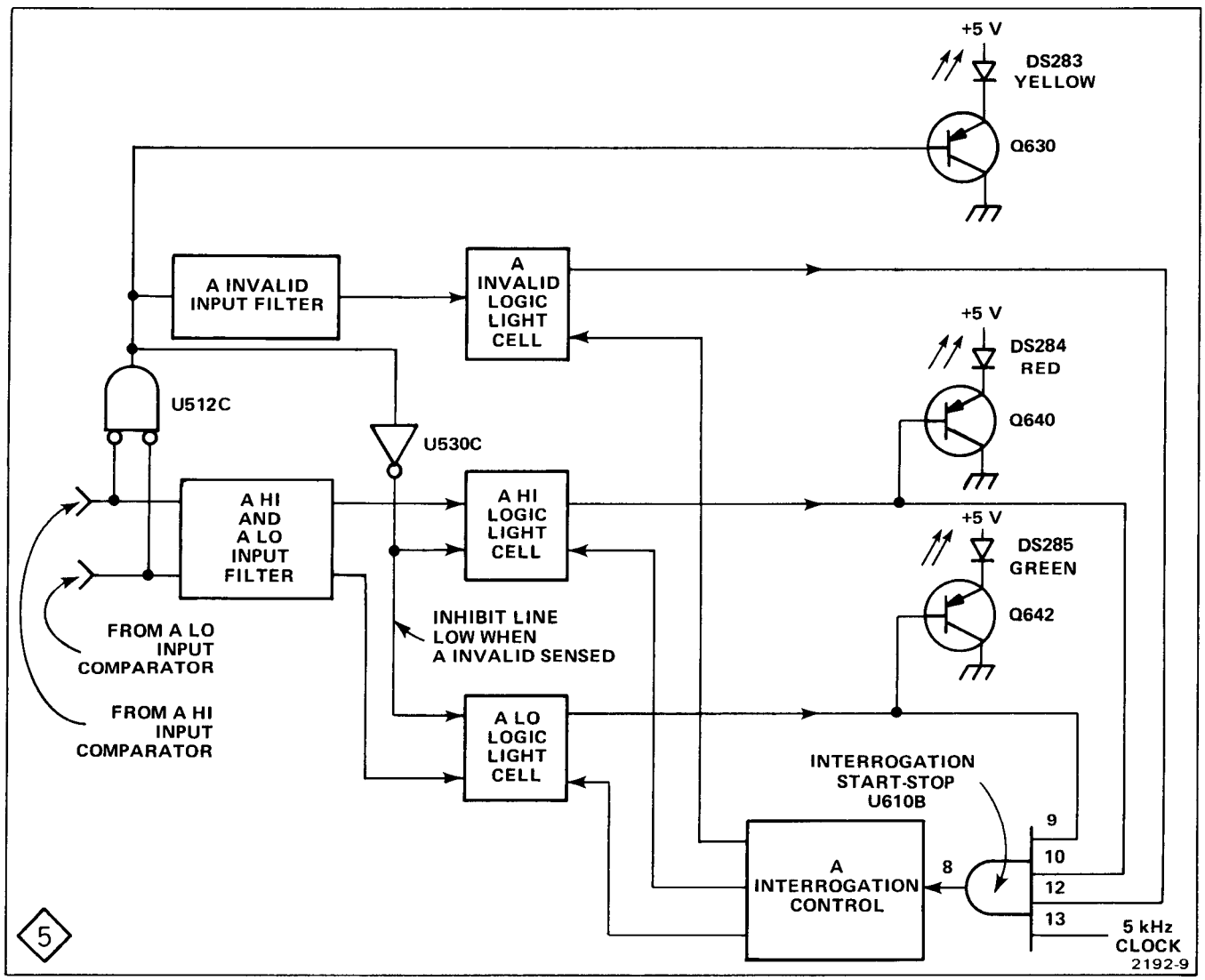

Fig. 6-27. Overall relationship of the individual circuits in the A Logic Lights circuit.

the C input of U620A and the circuit stops changing states. When the Logic Light is turned off, the process just described repeats.

The A Interrogation Control circuit produces four output conditions. In three of the conditions, one of the outputs is HI and one of the Logic Light cells is interrogated. In the fourth condition, all three outputs are LO and none of the Cells will be interrogated.

B and C Interrogation Control

Figure 6-26 shows a simplified diagram of the B Interrogation Control circuit. The C Interrogation Control circuit is the same so only the B circuit will be discussed. This circuit is similar to the A Interrogation control but is simpler since only two Logic Light Cells must be interrogated.

Assume the B HI Logic Light is on. This sets pins 1 and 2 of U615A LO. The 5 kHz clock cannot pass to the C input of U600A which prevents U600A from changing states.

When C584 (see diagram 5) charges sufficiently, the B HI Logic Light is turned off. This sets pins 1 and 2 of U615A HI. Now, both B Logic Lights are off and the 5 kHz clock is allowed to pass to the C input of U600A. When triggered by the clock, U600A changes states and interrogates the B LO Logic Light Cell. If no logic level has been sensed and stored, the B Logic Light does not come on. When again triggered by the clock, U600A changes states and interrogates the B HI Logic Light Cell.

A Logic Lights Overall Operation

Figure 6-27 shows the overall relationship of the individual circuits in the A Logic Lights circuit.

Note that the A Invalid indicator (DS283) is only on while an A Invalid condition is sensed. Therefore the intensity of the A Invalid indicator is proportional to the duty factor of the A Invalid signal (at the output of U512).

The A Invalid Logic Light Cell inhibits the A and B Cells through U530C when an A Invalid condition is sensed. This prevents a false A HI or A LO indication caused by the fact that one of the outputs of the Input Filter must always be HI. If the A Invalid condition was very short, the A Invalid Cell holds the other two Cells off (through A Interrogation Control) for a fixed amount of time. This prevents a false steady logic level indication caused by the low duty factor of the A Invalid indicator (too dim to see).

B and C Logic Lights Overall Operation

Figure 6-28 shows the overall relationship of the individual circuits in the B Logic Light circuit. The C Logic Light Cell is the same as the B Logic Light Cell.

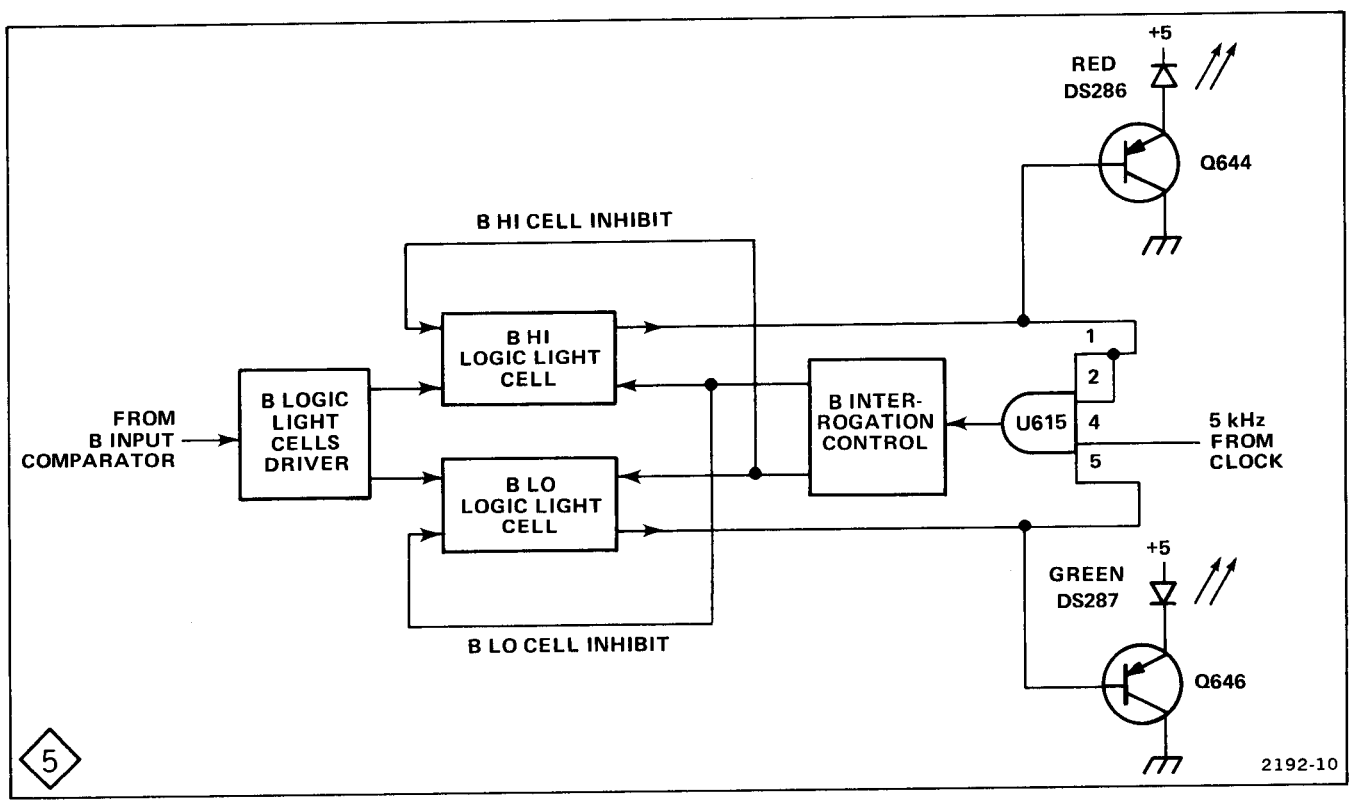

Fig. 6-28. Overall relationship of the individual circuits in the B Logic Lights circuit.

DUTY FACTOR CONVERTER ⟨6⟩

Figure 6-29 shows a simplified diagram of the Duty Factor Converter circuit. The circuit produces a dc voltage that is proportional to the duty factor of the A input signal. The duty factor is X/(X+Y) as shown in Fig. 6-29. This voltage is supplied to the DMM through the FUNCTION switch. In the POS position of the A SLOPE switch, the percentage of time the input signal is HI is measured. In the NEG position, the percentage of time the input signal is LO is measured. Normal operation of the circuit is with the A THRESHOLD controls set for single threshold operation and the A SLOPE control set to POS. These conditions are assumed in the following description.

In the single threshold mode, pin 11 of U560D is HI when the A input signal is HI and LO when the input signal is LO. The signal on pin 11 of U560D is applied to pin 13 of exclusive OR gate U570D. This gate inverts the signal applied to pin 13 when pin 12 is HI and acts as a buffer when pin 12 is LO. The signal on the output of U570D is inverted by U570A.

When the signal on pin 3 of U570A goes HI, CR560 is forward biased. This reverse biases CR652. The constant current from Q655 charges C657 through CR657.

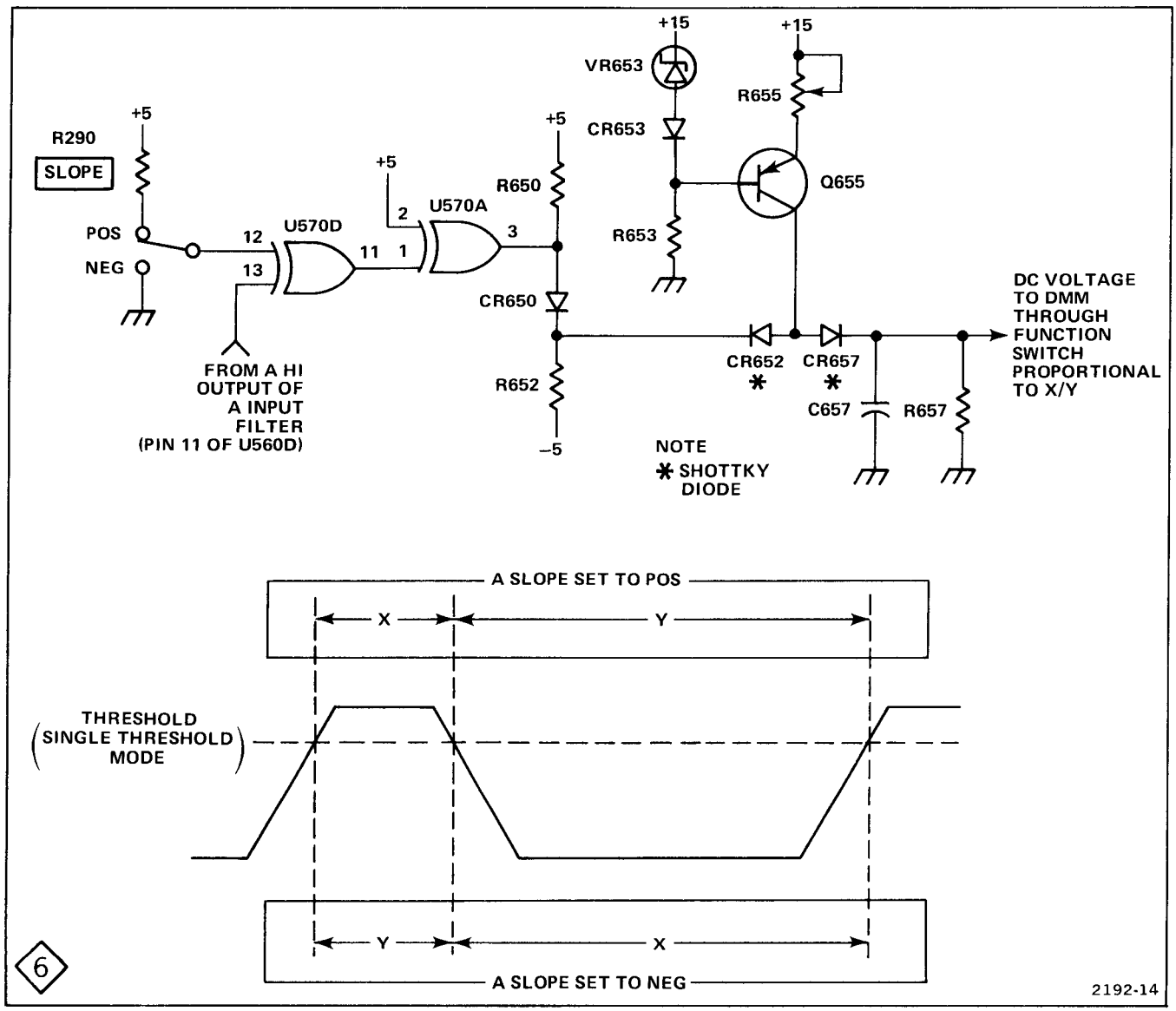

Fig. 6-29. Simplified diagram of the Duty Factor Converter.

When the signal on pin 3 of U570A goes LO, CR650 is reverse biased. The cathode of CR652 is pulled LO through R652. This pulls the anode of CR657 LO, reverse biasing CR657. The constant current from Q655 flows through CR652 and R652. While CR657 is reverse biased, C657 discharges through R657.

The resulting average charge on C657 is proportional to the percentage of time the signal on pin 3 of U570A is HI (the time Q655 charges C657). This dc voltage is supplied to the DMM through the FUNCTION switch. A voltage of 0.5 volt corresponds to a duty factor of 50 percent. The decimal point is shifted to the right so the display reads 50.00 for a 50 percent duty factor.

PEAK DETECTORS AND A COMPARISON VOLTAGE CONTROL 6

Figure 6-30 shows a block diagram of the Peak Detectors and the A Comparison Voltage Control circuits.

The Peak Detectors supply dc voltages to the Input Comparators in place of the voltages from the THRESHOLD controls. These dc voltages are also supplied to the DMM through the FUNCTION switch. Over a very short period of time these dc voltages will reach the level of repetitive peaks of the A input signal.

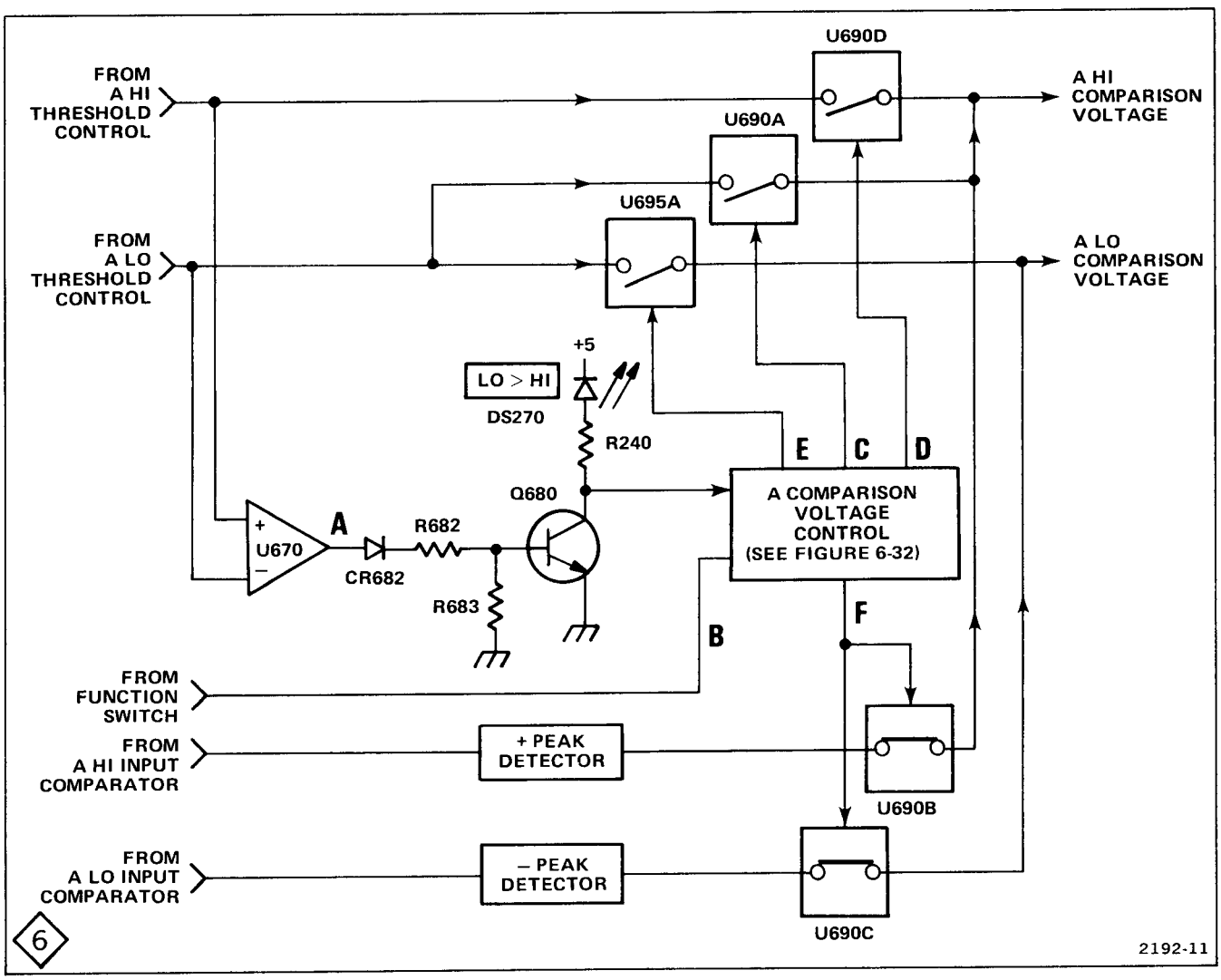

Fig. 6-30. Block diagram of the Peak Detectors and the A Comparison Voltage Control circuits.

The Comparison Voltage Control circuit controls whether the voltages from the Peak Detectors or from the A THRESHOLD controls are supplied to the Input Comparator Cells. Also, when the A HI THRESHOLD control is set less positive than the A LO THRESHOLD control, this circuit disconnects the voltage from the A HI THRESHOLD control from the A HI Input Comparator Cell and connects the voltage from the A LO THRESHOLD control in its place. When this happens, the A input operates with a single threshold in the same way the B and C inputs operate. The single threshold level is controlled by the A LO THRESHOLD control. The LO>HI LED on the front panel lights to indicate Channel A is operating in the single threshold mode.

+Peak Detector

Figure 6-31 shows a simplified diagram of the + Peak Detector and the A HI Input Comparator Cell.

With the FUNCTION switch set to + PEAK V, the + Peak Detector supplies a dc voltage to the inverting input of the A HI Input Comparator Cell. To explain the circuit, assume the signal on the A probe has peak levels that are more positive than the dc voltage being supplied by the + Peak Detector. The following sequence of events occurs:

1. Assume point U goes slightly more positive than point Z causing point V to step HI. This turns on the complementary latch (Q700A and Q700B) causing point W to step LO.

2. When point W steps LO, Q704 turns on. Q704 supplies base drive to turn on Q708 through source follower Q702A. When Q708 turns on, C706 rapidly discharges through Q708 until points Y and Z are at the same voltage.

3. When point Y reaches the same voltage as point Z, CR706 becomes forward biased. During the remainder of the time Q704 is on, points Y and Z will track each other. Both points will go more positive as C706 discharges through Q708 and as C714 and C20 charge through Q704 and CR706.

4. One of two things will happen to cause point V to step LO. Either Z will become as positive as U or the pulse at U will step LO. In either case the sequence of events is the same. Assume point U steps LO. This causes point V to step LO. The complementary latch turns off. However, point W does not step HI until C702 charges sufficiently through R700E, R700D, and R700G. This delay allows C706 to charge for the duration of the HI at V plus the time it takes to charge C702. The reason for the delay is to speed up the measurement of extremely low-duty-factor signals.

5. When Q704 turns off, it turns off Q708 and cuts off the charge current to C714 and C20. At this instant, points Y and Z are at the same voltage. CR709 and CR710 will not conduct.

6. When Q704 turns off, C706 starts charging through R706 causing Y to move in a negative direction. Note that the voltage at point Z remains constant. When point Y moves in a negative direction about 1.4 volts, CR709 and CR710 start conducting. Now the current through R706 is divided between C706 and the combination of C714 and C20. Points Y and Z will both start moving in a negative direction.

7. Point Z continues moving in a negative direction until it becomes less positive than point U or until a pulse occurs at point U. In both cases the sequence of events just described repeats.

The voltage at point Z is supplied to the Analog To Digital Converter. This voltage will be the same as the peak voltage at point U within the limits given in Section 1 of this manual.

−Peak Detector

The − Peak Detector is almost the same as the + Peak Detector. Only the differences will be discussed here. Refer to Fig. 6-31 and schematic diagram 6 for the following discussion.

When the complementary latch (Q720A and Q720B) turns on, it turns on Q724, Q726, and Q728. These two transistors perform the same function as Q704 performs in the + Peak Detector. While they are turned on, C726 discharges and the combination of C734 and C51 charge. However, as C734 charges, the comparison voltage (at the junction of CR726 and CR730) moves in a negative direction.

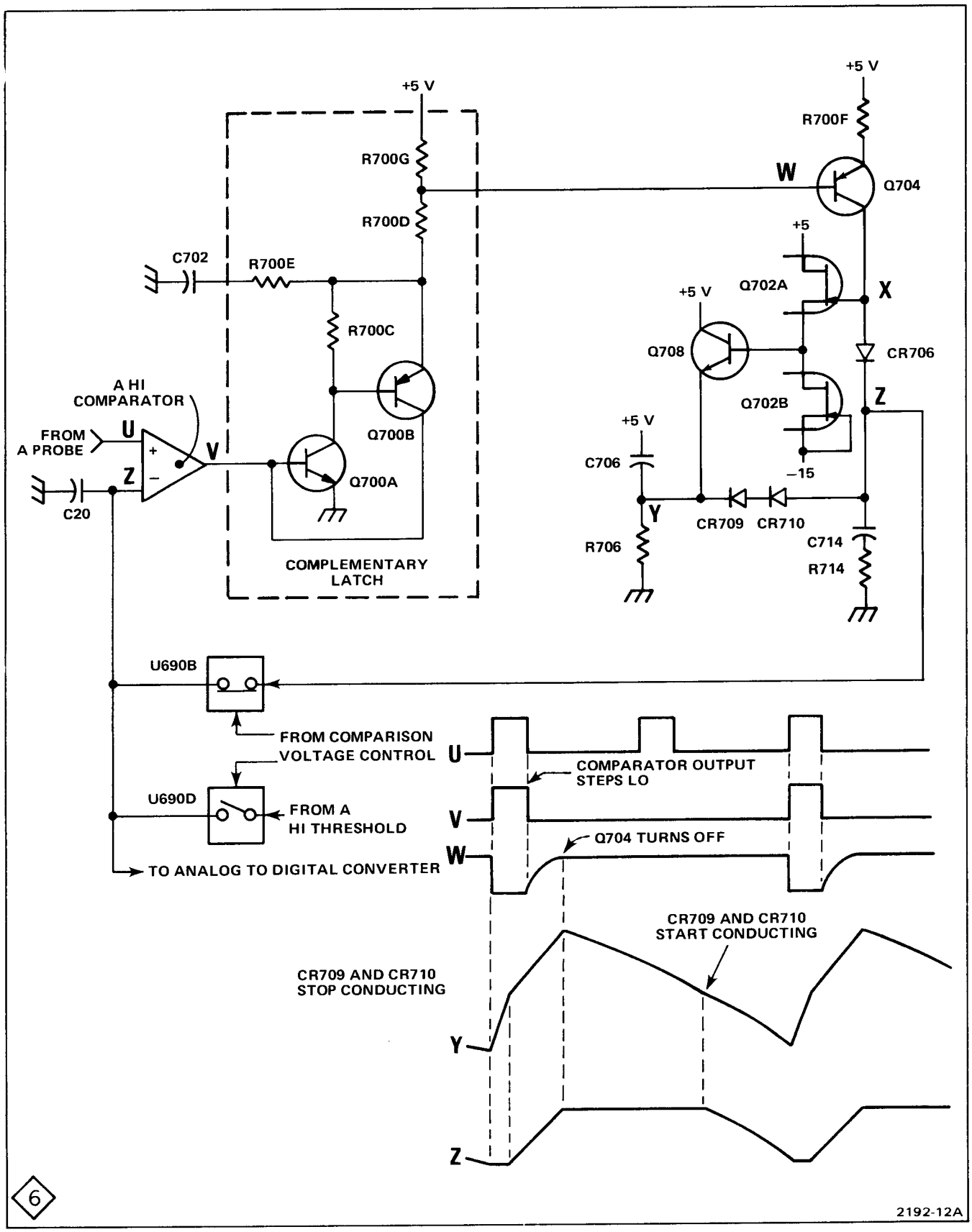

Fig. 6-31. Simplified diagram of the + Peak Detector and the A HI Comparator Cell.

A Comparison Voltage Control

Figures 6-32 and 6-30 show the A Comparison Voltage Control circuit.

This circuit performs the following three functions:

1. Determines whether the comparison voltages supplied to the A Input Comparators come from the THRESHOLD controls or from the Peak Detectors.

2. Whenever the A HI THRESHOLD control is set to a voltage less positive or more negative than the A LO THRESHOLD control, this circuit disconnects the voltage produced by the A HI THRESHOLD control from the A HI Input Comparator and connects the voltage from the A LO THRESHOLD in its place. This causes the A input to operate in the single-threshold mode.

3. When operating in the single-threshold mode, this circuit causes a front-panel indicator to light (the LO>HI light).

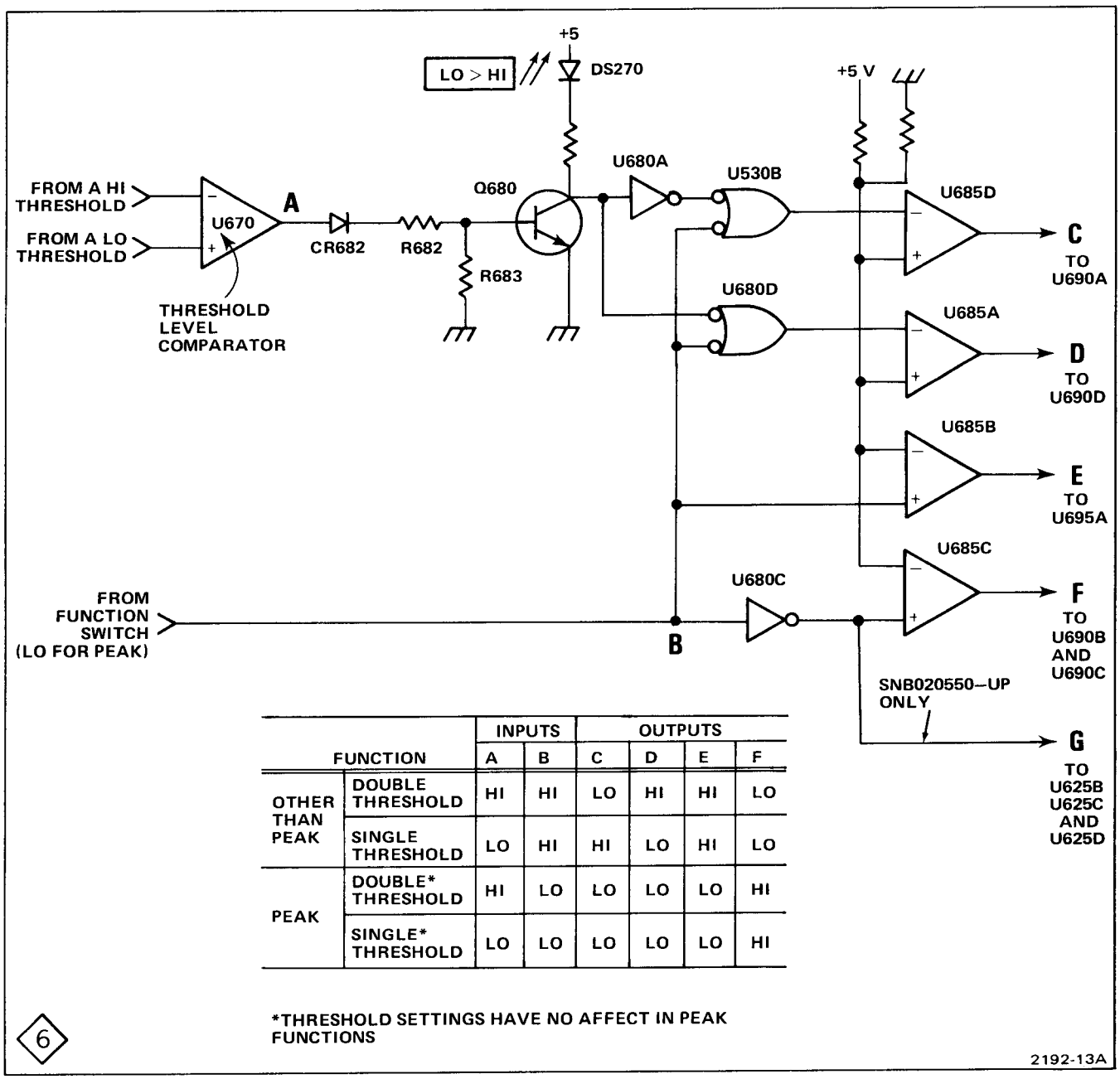

FUNCTION		INPUTS A	INPUTS B	OUTPUTS C	OUTPUTS D	OUTPUTS E	OUTPUTS F
OTHER THAN PEAK	DOUBLE THRESHOLD	HI	HI	LO	HI	HI	LO
	SINGLE THRESHOLD	LO	HI	HI	LO	HI	LO
PEAK	DOUBLE* THRESHOLD	HI	LO	LO	LO	LO	HI
	SINGLE* THRESHOLD	LO	LO	LO	LO	LO	HI

*THRESHOLD SETTINGS HAVE NO AFFECT IN PEAK FUNCTIONS

Fig. 6-32. Simplified diagram of the A Comparison Voltage Control circuit.

The functions of points A through F (indicated in Figures 6-32 and 6-30) are as follows:

POINT A—This is the output of the threshold comparator. This point is HI only when the A HI THRESHOLD control is set less positive or more negative than the A LO THRESHOLD control. When point A is HI it turns on Q680 which lights the LO>HI light.

POINT B—This is the control signal from the FUNCTION switch. This point is LO only in the + PEAK and − PEAK settings of the FUNCTION switch.

POINT C—This point controls U690A. When this point is HI, U690A passes the voltage from the A LO THRESHOLD control to the A HI Input Comparator. This happens only in the single threshold mode.

POINT D—This point controls U690D. When this point is HI, U690D passes the voltage from the A HI THRESHOLD control to the A HI Input Comparator.

POINT E—This point controls U695A. When this point is HI, U695A passes the voltage from the A LO THRESHOLD control to the A LO Input Comparator.

POINT F—This point controls U690B and U690C. When this point is HI, U690B passes the voltage from the + Peak Detector to the A HI Input Comparator and U690C passes the voltage from the − Peak Detector to the A LO Input Comparator.

POINT G—(SN B020550—UP) This point controls U625B, C, and D (see diagram 5). When the FUNCTION switch is in either + or − (minus) PEAK VOLTS positions, the output of U680C is HI. This inhibits the CHANNEL A HI and LO indicators from turning on during peak measurements. When a valid measurement signal is present at the input, the X (transition) lamp will illuminate. For serial numbers below B020550, point G is not present and the CHANNEL A LO and HI indicators will flicker when the FUNCTION switch is in the peak volts position. The X (transition) lamp will be illuminated.

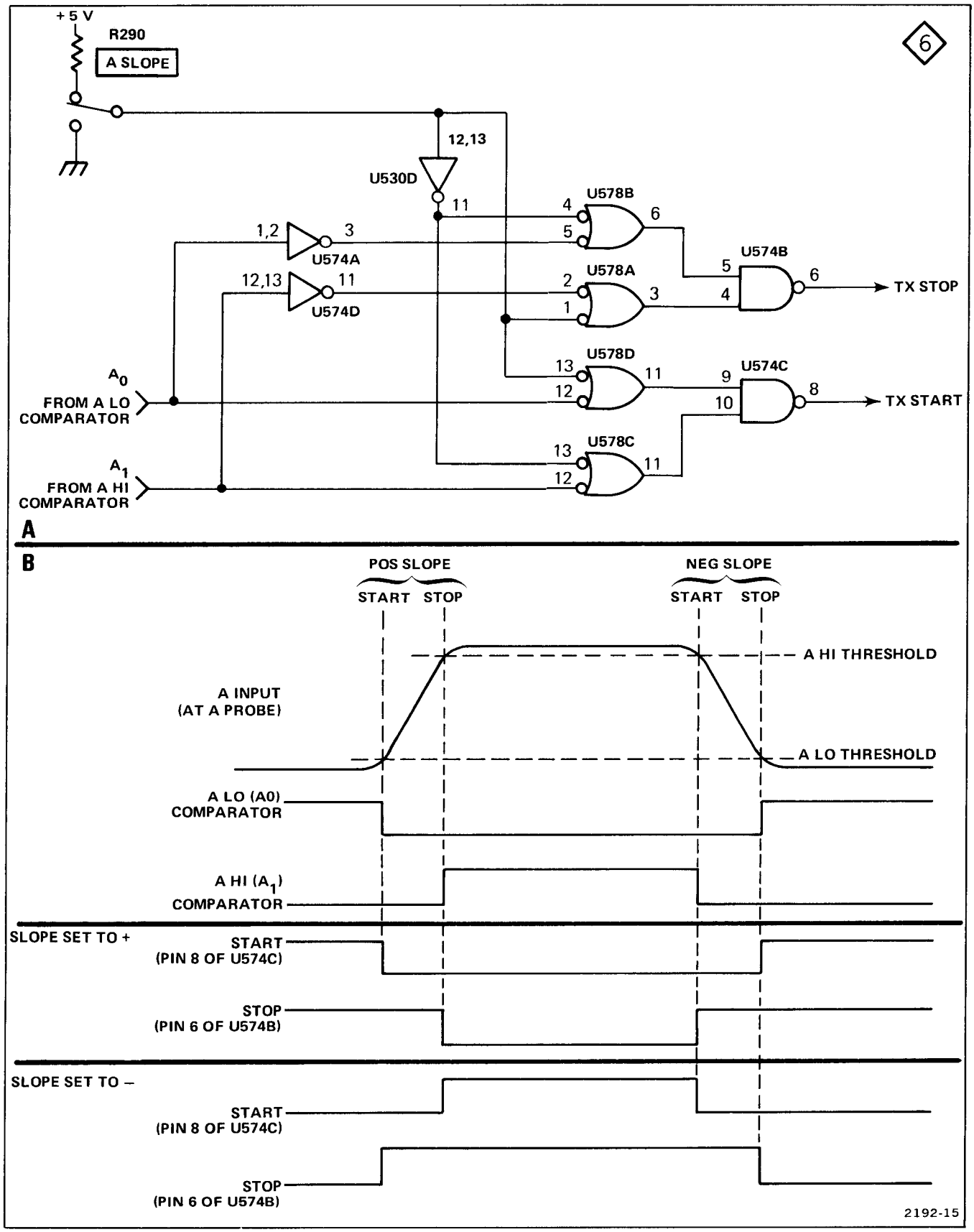

Fig. 6-33. Simplified diagram of the Transition Start-Stop circuit with a timing diagram.

TRANSITION TIME START-STOP 6

Figure 6-33 shows a simplified diagram of the Transition Time Start-Stop circuit with a timing diagram.

In the TRNSN TIME (HI-LO) setting of the FUNCTION switch, the 851 measures the time it takes for the A input signal to pass from one threshold level to the other (see Fig. 6-33). To do this, the Counter circuit counts clock pulses. The Transition Time Start-Stop circuit tells the Counter circuit when to start and stop counting. The Counter starts and stops on negative-going transitions of the control signals at pin 8 of U574C and pin 6 of U574B respectively. If the transition time is too fast, the following circuitry will not recognize a stop pulse, (see Counter Gate Logic). Therefore, the clock pulses will continue to be supplied to the Decade Counters until a Counter Overrange condition is reached. This causes the display to flash.

COUNTER

Figure 6-34 shows a block diagram of the Counter circuit.

The Counter Source Selection Logic selects the signal supplied to the Decade Counters. When initiated by the Latch Strobe Logic, the count in the Decade Counters is latched into the Storage Registers. The Counter Reset Logic then resets the Decade Counters to 00000. The Time And Frequency Range Decode circuit controls the operating range in Time and Frequency functions by either controlling the frequency of the clock supplied to the Decade Counters or by controlling the duration of the counter gate. The Counter also contains circuits to sense a Counter overrange, a Counter underrange, and a DMM underrange condition. A circuit to sense a DMM overrange condition is contained in the DMM circuit.

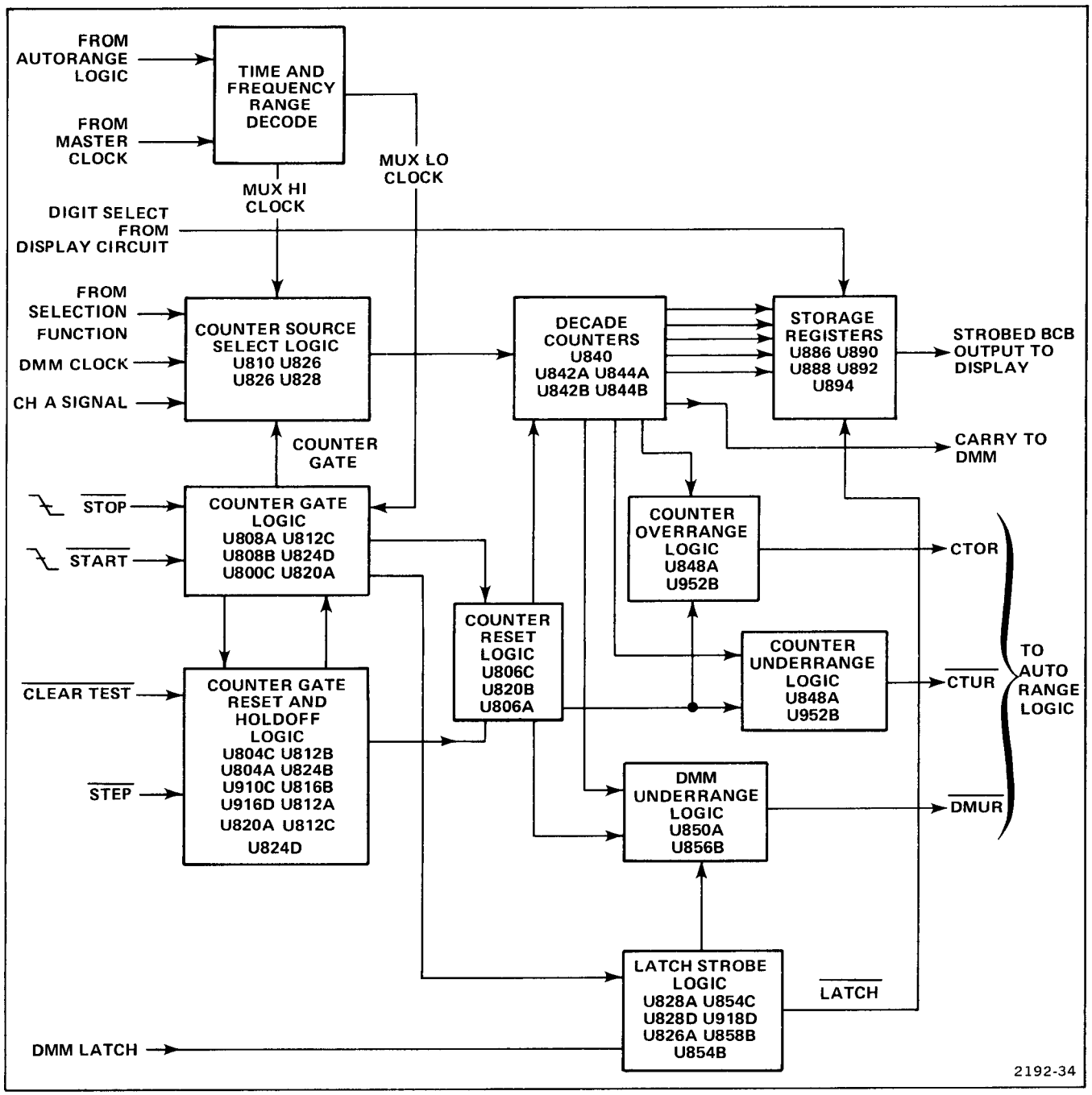

Fig. 6-34. Block diagram of the Counter.

A SIGNAL TRANSITIONS SENSE LOGIC ⟨7⟩

Figure 6-35 shows a simplified diagram of this circuit with a timing diagram.

This circuit produces a short-duration positive-going pulse for every transition of the A input signal. In Count functions, only the negative transitions of the signal supplied to this circuit are counted. In the A TRNSN B to C function, both positive and negative transitions are counted. Note that the polarity of the signal supplied to this circuit is dependent on the setting of the A SLOPE switch.

When a positive-going transition occurs at point A (see Fig. 6-35), it sets pin 10 of U802 HI. Pin 9 of U802 (point B) remains HI for a short time due to the delay caused by L801, L802, C802A, and U800B. When point A goes HI, pin 8 of U802 (point C) steps HI and remains HI until point B goes LO.

When a negative-going transition occurs at point A, it sets pin 8 of U804C LO. Pin 9 of U804C (point B) remains LO for a short time due to the delay of L801, L802, and C802A. When point A goes LO, point D goes HI and remains HI until point B goes HI.

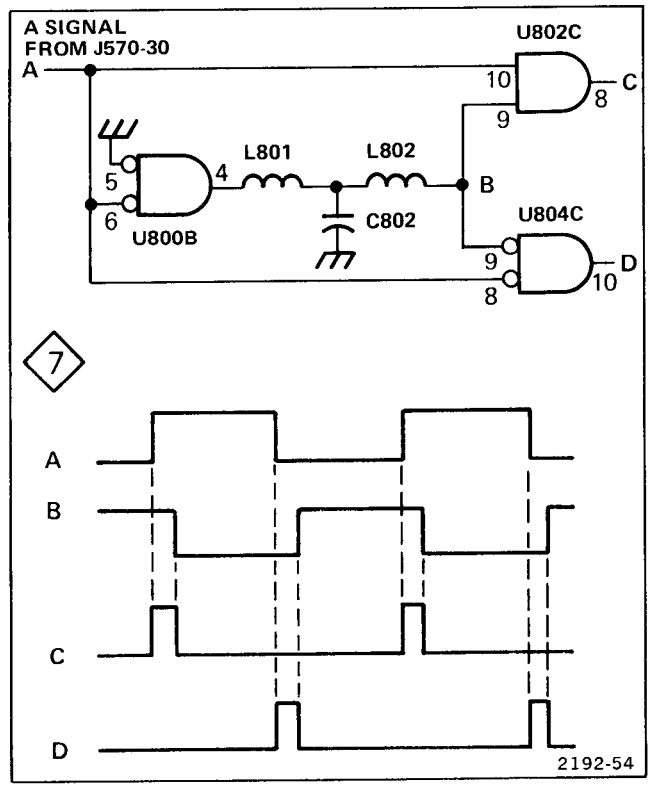

Fig. 6-35. Simplified diagram of the A Transitions Sense Logic with a timing diagram.

COUNTER SOURCE SELECTION LOGIC 7 12

Figure 6-36 shows a diagram of the Counter Source Selection Logic. Table 6-1 lists the operating conditions of this circuit. This circuit selects the signal which will be counted by the Decade Counters. The input signals are supplied to AND gates A, B, C and D within U810 and to Q1142. Under most operating conditions, only one of these gates or Q1142 will be enabled at a time. In the A Transitions (B → C) function, gates A and B are both enabled at the same time. In most functions, the Counter Gate must be HI to pass an input signal to the Counters.

Table 6-1

COUNTER SOURCE SELECTION LOGIC OPERATION

Conditions	Signal Passed	Device(s) Enabled
1. **TIME** function selected (sets U825C-10 HI). 2. In S0 range (sets U825C-11 HI). 3. Counter gate sets U825C-9 HI).	100 MHz clock (applied to base of Q1142).	Q1142
1. **A TRNSN (B→C)** function selected (sets U810-12 HI). 2. Because this is a Count Function, U810-5 is set HI. 3. Counter gate sets U810-1 and U810-4 HI.	A signal negative transitions (applied to U810-6) A signal positive transitions (applied to U810-11).	U810A U810B U810E
1. **Count** or **Frequency** function selected (sets U810-5 HI). 2. Counter gate sets U10-4 HI.	A signal negative transitions (applied to U810-6).	U810B U810E Q1140
1. **DMM** function selected (sets U828-9 and U826-9 HI—Also sets U810-2 HI through U826C). 2. Counter Gate Logic held off (because U812D-5 is LO).	DMM clock (applied to U828-10).	U810C U810E Q1140
1. **Time** function selected (causes clock to be supplied to U826-12—see master clock). 2. Because this is a non-DMM function, U828-9 is set LO.	Clock frequency depends on range.	U810C U810E Q1140
1. **Totalize** function selected and S231 is set to NORM position (sets U810-10 HI).	A signal negative transitions (applied to U810-9).	U810D U810E Q1140

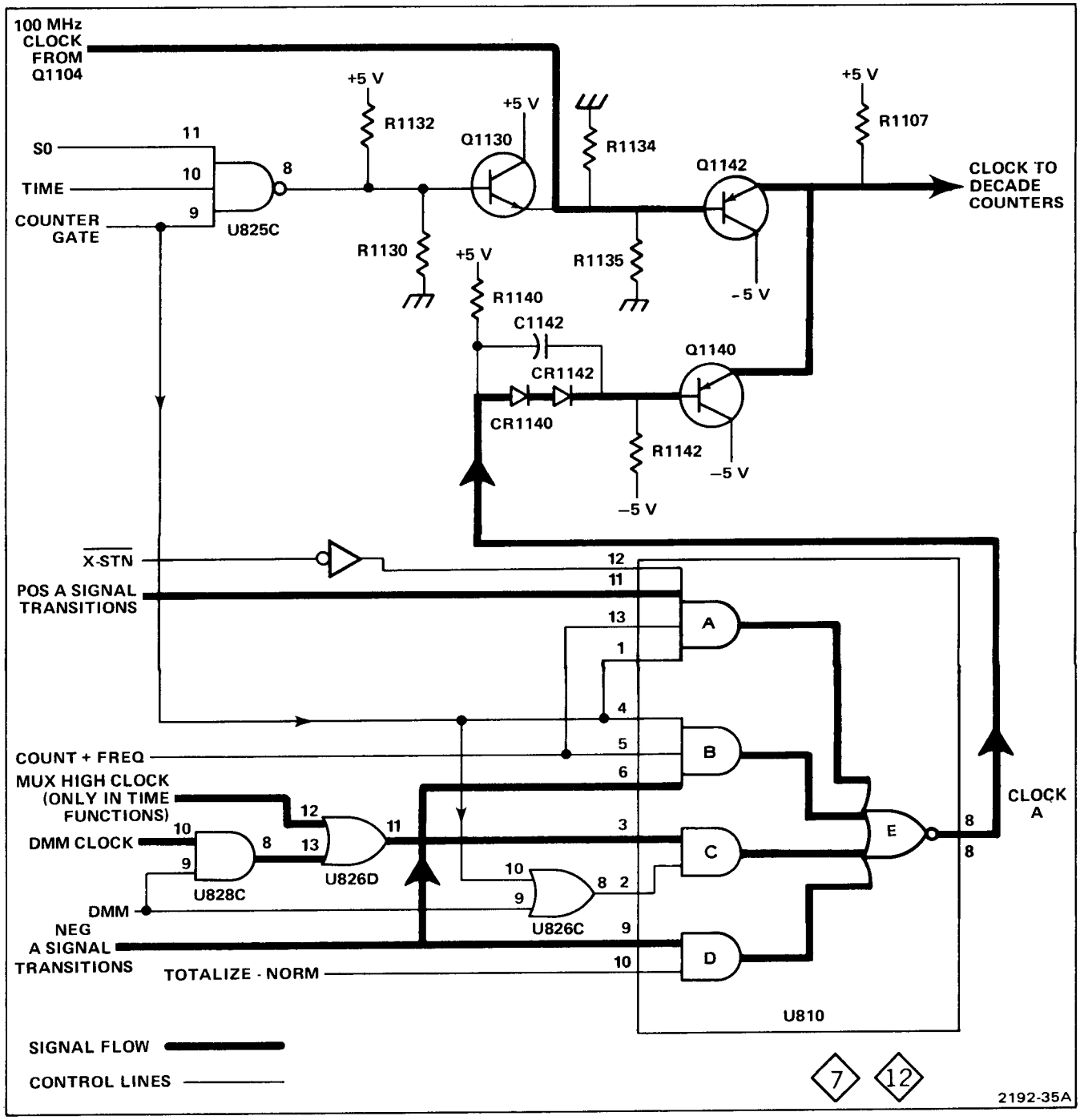

Fig. 6-36. Counter Source Selection Logic.

TIME AND FREQUENCY AUTORANGE DECODE (12)

This circuit consists of U1130 (see diagram 12). U1130 is a dual four-line to one-line data selector. Clock signals ranging from 1 Hz to 10 MHz are supplied to its inputs. One of the outputs of U1130 is supplied to the Decade Counters through the Counter Source Selection Logic. The other output is supplied to the Counter Gate Logic. Which clock signals are supplied to the outputs is determined by the binary state of pins 2 and 14 of U1130. These pins are controlled by the Autorange Logic and controls both halves of U1130.

Time

In one of the Time functions in any range except S0 (most sensitive), pin 1 of U1130 is set LO. This causes one of the clock signals applied to pins 3 through 6 of U1130 to be supplied to pin 7 (which one depends on the states of pins 2 and 14). The selected clock is supplied to the Decade Counters through the Counter Source Selection Logic. When measuring increasingly short time durations, the frequency of the selected clock is increased to prevent a counter underrange. See Autorange Logic for a discussion of the operating ranges.

In a Time function when operating in the S0 range, pin 1 of U1130 is set HI (because pin 13 of U812D is set LO). This disconnects all clock signals from pin 7 of U1130. Now the 100 MHz clock is supplied directly to the decade counters through Q1142 (see Counter Source Selection Logic). Table 6-2 shows the operating range and the clock rate supplied to the decade Counters.

Frequency

In the Frequency function, pin 15 of U1130 is set LO. This causes one of the clock signals applied to pins 10 through 13 to be supplied to pin 9 (which one depends on the states of pins 2 and 14). The selected clock is supplied to the Counter Gate Logic. The repetition rate of this clock determines the duration of the counter gate. As the frequency being measured decreases, a lower repetition rate is selected to prevent a counter underrange. Table 6-2 shows the operating range and the clock rate supplied to the Counter Gate Logic.

Table 6-2

TIME AND FREQUENCY RANGE DECODE

Range[a]	Q1 U1130-14	Q2 U1130-2	Clock[b] Passed To U1130-9	Clock[c] Passed To U1130-7
S0			[e]	[d]
S1	HI	LO	[e]	10 MHz
S2	LO	HI	1 Hz	1 MHz
S3	HI	HI	10 Hz	100 kHz
S4	LO	LO	100 Hz	10 kHz
S5	HI	LO	1 kHz	[e]
S6			[e]	[e]
S7			[e]	[e]

[a]See Autorange Logic.

[b]When U1130-15 is LO (IN FREQ Function).

[c]When U1130-1 is LO (IN TIME Functions).

[d]In S0 RANGE, U1130-1 is set HI and 100 MHz Clock is passed through Q1142.

[e]Illegal state.

DECADE COUNTERS (8)

The Decade Counters consist of U840, U842, and U844. Diagram 8, at the rear of this manual, shows the Decade Counters.

In all functions except DMM, the maximum count in the Decade Counters is 99999. In DMM functions, pin 12 of AND gate U850 is held LO. This restricts the count in U844A to zero or one. Therefore the maximum count in DMM functions is 19999.

STORAGE REGISTERS 8

The Storage Registers consist of U886, U888, U890, U892, and U894. The BCD outputs of the Decade Counters are directly connected to the inputs of the Storage Registers. When a latch strobe pulse occurs, pin 9 of each Register steps LO. This causes the count to be stored in the Storage Registers.

The outputs of the Storage Registers are connected in parallel. The count stored in a given Register is supplied to its output only when strobed (pin 8 set HI). Only one Storage register is strobed at a time. The resulting strobed BCD output is supplied to the Display circuit.

In PEAK functions, the least significant digit of the Display is suppressed. To do this, pin 2 of U858A is set LO on each digit-one select pulse. Therefore, pin 5 of U858A does not change states (it remains LO) and the count stored in U886 is not supplied to the Display circuit. Instead, while digit one would have been displayed, the outputs of U886 are pulled HI through pull-up resistors. The Display circuit senses this as a BCD count of 15. The BCD to seven segment decoder in the Display circuit blanks all seven segments when supplied a BCD count of 15.

In functions other than PEAK, pin 2 of U858A is set HI and the least significant digit is not suppressed. When digit one is not selected, pin 1 of U858A is LO. This holds pin 5 of U858A LO. When digit one is selected, pin 1 of U858A immediately steps HI. After a delay, determined by R858 and C858, pin 3 of U858 steps HI causing pin 5 to step HI and strobe U886. The delay ensures the reset (on pin 1 of U858A) is removed before U858A is clocked.

COUNTER GATE LOGIC ⟨7⟩

Figure 6-37 shows a simplified diagram of the Counter Gate Logic with a timing diagram. This circuit supplies a gate signal to the Counter Source Selection Logic. This circuit also supplies signals to the Latch Strobe Logic and the Counter Reset Logic. While the Counter gate is HI, the Counter Source Selection Logic supplies a signal to the Decade Counters. Note that in some functions, no Counter gate is required by the Source Selection Logic. In these functions the Counter Gate Logic is held off (Counter Gate is held LO).

Normal Operation

When not held off by the Counter Gate Reset And Holdoff Logic, the sequence of events in the Logic is as follows:

1. Assume the Counter Gate circuit has been reset and holdoff has been removed (point C HI). The Q outputs of U808A and U808B are both LO. The Q output of U808A sets pin 11 of U808B LO. This ensures pin 9 of U808B remains LO regardless of the stop pulses supplied to pin 13 of U808B.

2. Assume a start signal occurs. On the falling edge of the start signal, pin 1 of U808A is set LO causing the outputs of U808A to change states. Now, both inputs of U800C are LO and its output (the counter gate) goes HI.

3. When the outputs of U808A changed states, pin 11 of U808B was set HI. Now the next stop pulse (applied to pin 13 of U808B) will cause the outputs of U808B to change states.

4. Assume a stop pulse occurs. On the falling edge of the stop pulse, pin 13 of U808B is set LO and the outputs of U808B change states. The Q output of U808B steps HI causing the counter gate at pin 10 of U800C to step LO.

5. When the $\overline{Q}$ output of U808B stepped LO, it triggered U820A through U812C and U824C. The outputs of U820A are supplied to the Latch Strobe Logic, the Counter Reset Logic and holdoff timing (U818 on diagram 7).

6. After a counter gate has been produced, another cannot be produced until the Counter Gate Logic is reset. The Counter Gate Reset and Holdoff Logic supplies signals to pin 15 of U808A and pin 14 of U808B. When these signals step LO, they reset the Counter Gate Logic. While these signals remain LO, the Counter Gate Logic is held off.

Overrange Operation

When an overrange condition exists, the Autorange Logic sets pin 10 of U924C LO (see Fig. 6-37). If S231 (DISPLAY switch) is set to NORM, pin 8 of U924C steps LO when pin 10 is set LO. This is coupled through U812C and U824C to U820A. U820A is triggered and supplies signals to the Latch Strobe Logic and the Counter Reset Logic. The result is that the Decade Counters are reset and a new measurement is begun as soon as an overrange condition is sensed. This speeds up Autorange operation.

Totalize Operation

When operating in the Totalize function, pin 12 of U816D is set HI. This allows the 100 Hz clock to pass through U816D to U820A. This triggers U820A at a 100 Hz rate. The 100 Hz outputs of U820A are supplied to the Latch Strobe Logic and the Counter Reset Logic.

In the Totalize function, pin 11 of U820B is set LO (see diagram 7 or Fig. 6-40). This prevents the Counter Reset Logic from responding to the 100 Hz signal from the Counter Gate Logic. Therefore no reset pulses are generated. To reset the Decade Counters in the Totalize function, a manual reset pulse must be generated (see Counter Gate Reset and Holdoff Logic and Counter Reset Logic).

The 100 Hz signal from U820A causes latch strobe signals to be generated at a 100 Hz rate. This updates the display 100 times a second. This allows continuous display of the count.

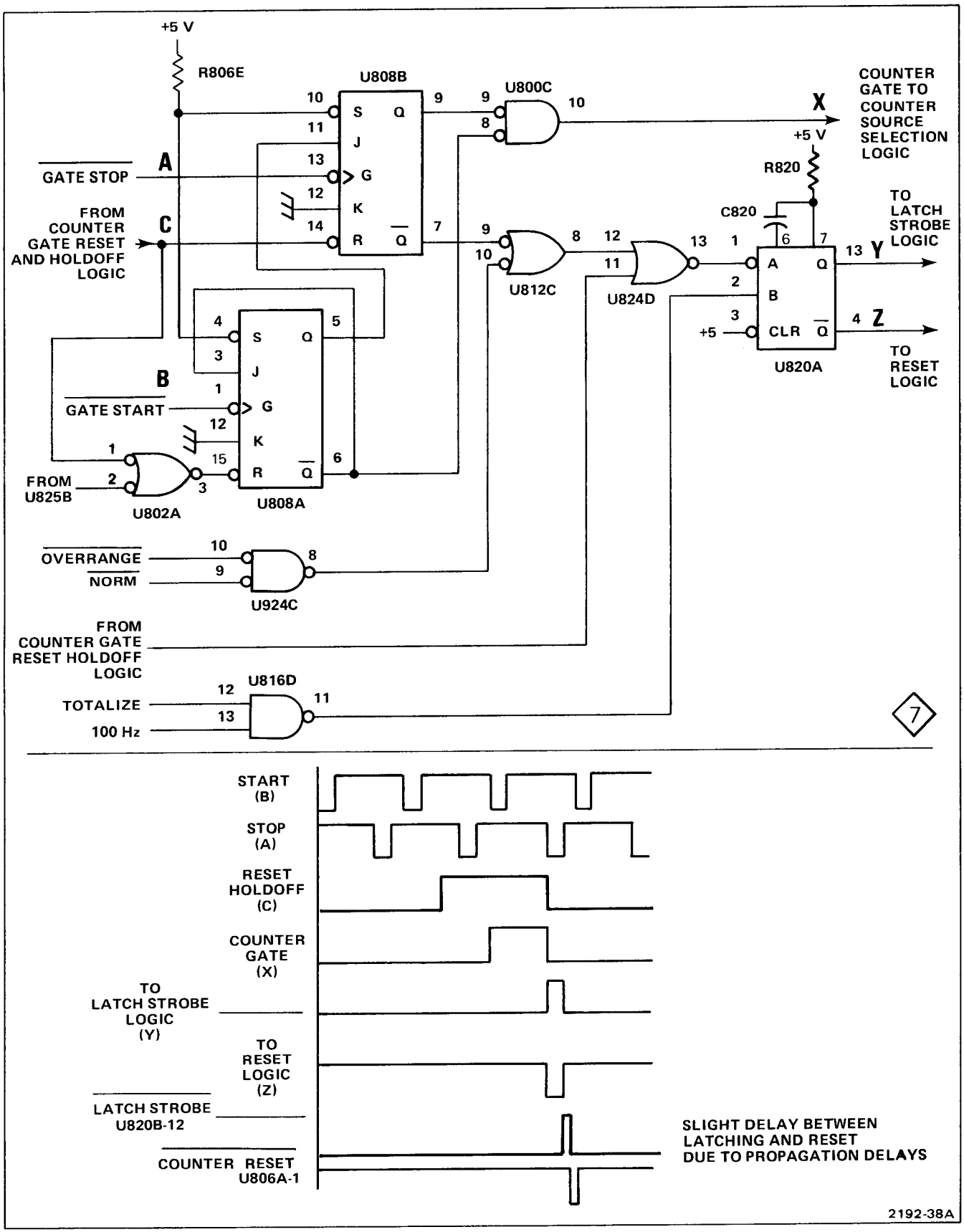

Fig. 6-37. Simplified diagram of the Counter Gate Logic with a timing diagram.

COUNTER GATE RESET AND HOLDOFF LOGIC ⟨7⟩

Figure 6-38 shows a diagram of the Counter Gate Reset and Holdoff Logic. This circuit produces signals at points D and E to reset and holdoff the Counter Gate Logic. A LO at D resets the start flip flop and a LO at E resets the stop flip flop. A LO at point A causes point D to step LO. A HI at point B or point C causes both points D and E to step LO. The following description gives the conditions which cause A, B, and C to initiate reset and holdoff.

Point A

A LO at point A causes Point D to step LO and reset only the start flip flop (U808A). Since U808B is not reset, U820A is not triggered (see Counter Gate Logic and Fig. 6-37). Therefore, no counter reset or latch strobe signals are generated. Point A steps LO when $\overline{T}_x$ is LO and start signal steps HI before the counter gate ends (steps LO). $\overline{T}_x$ is LO in Width, Transition Time, and Time B-C functions.

Due to propagation delays, the Counter Gate Logic cannot respond to a stop pulse until a given amount of time after a start pulse. This delay creates a non-valid measurement when the duration of the measurement is less than the propagation delays. When this occurs, the start flip flop is reset as just described. Since no counter reset pulse is generated, successive non-valid measurements increase the accumulated count in the Decade Counters. Eventually a counter overrange occurs causing a flashing display. The flashing display informs the 851 operator the measurement being made is not valid.

Point B

A HI at point B causes both D and E to step LO. This resets both the start and stop flip flops. The table at the bottom of Fig. 6-38 shows the conditions affecting point B.

Point C

A HI at point C causes both D and E to step LO. This resets both the start and stop flip flops.

When a counter reset pulse is generated, pin 2 of U818 is set LO. This causes pin 3 of U818 (point C) to step HI. Point C remains HI for a time determined by R818 and C818. While point C is HI, the Counter Gate Logic is held off.

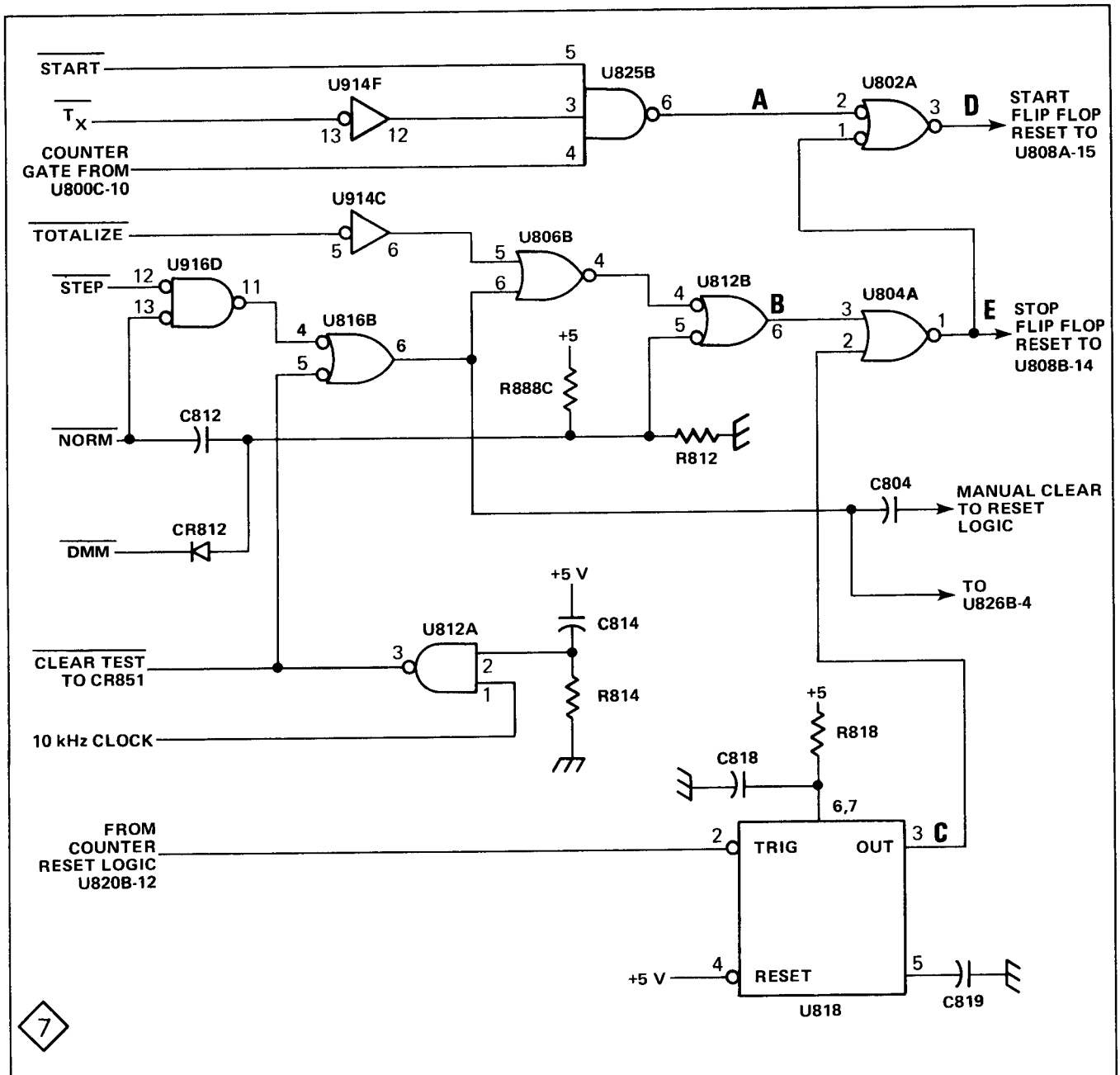

POSSIBLE CONDITIONS AFFECTING POINT B	U914C		U806B			U916D			U816B			U812B		
	5	6	5	6	4	12	13	11	4	5	6	4	5	6
NON TOTALIZE AND NON DMM														
NORM – AUTO OR MNL	H	L	L	L	H	H	XL	H	H	H	L	H	H	L
NORM – DOWN RANGE	H	L	XL	H	L	L	L	L	L	XH	H	L	XH	H
SAVE	H	L	L	L	H	X	H	H	L	H	L	H	H	L
CLEAR TEST	H	L	XL	H	L	X	X	X	XH	L	H	L	XH	H
TOTALIZE	L	H	H	X	L	X	X	X	X	X	X	X	X	H
DMM	X	X	X	X	X	X	X	X	X	X	X	X	L	H

X Doesn't care. If a logic level is also shown, that level exists for the given conditions. However, the level shown will not be necessary to produce the desired output at point B.

2192-39A

Fig. 6-38. Counter Gate Reset and Holdoff Logic.

LATCH STROBE LOGIC 7 8

Figure 6-39 shows a simplified diagram of the Latch Strobe Logic. This circuit controls when the count in the Decade Counters is latched into the Storage Registers. A negative-going transition on pin 4 of U854B is supplied to pin 9 of each register to cause latching.

The portion of Fig. 6-39 to the left of the dashed line performs an OR function. The latch strobe (at pin 3 of U826A) can be initiated by; a signal from the DMM Latch Strobe Logic, a signal from the Counter Gate Logic, or the manually generated CLEAR pulse from the Counter Gate Reset and Holdoff Logic.

The portion of Fig. 6-39 to the right of the dashed line either blocks or passes the latch strobe to the Storage Registers depending on the 851 operating mode.

DMM Latching

In DMM functions, the DMM latch strobe applied to pin 13 of U828D always appears at pin 3 of U826A. Also, the HI on pin 5 of U826B blocks the manual CLEAR input (at pin 4 of U826B). In DMM Functions, the Counter Gate Logic is disabled and there is no input to pin 1 of U826A.

DMM-NORM OPERATION. In DMM functions, when S231 (DISPLAY switch) is set to NORM, the DMM latch strobe at pin 3 of U826A is passed to pin 4 of U854B.

Diodes CR851, CR852, and CR853 form a diode logic gate. A LO on any cathode sets pin 9 of U854C and pin 12 of U858B LO. In DMM-NORM operation, the cathode of CR852 is set LO. The resulting LO on pin 12 of U858B ensures pin 9 of U858B is always LO. Therefore U854C and U854B operate as inverters (because one input of each is held LO). This allows the DMM latch strobe to pass to pin 4 of U854B.

DMM-SAVE OPERATION. In DMM functions, when S231 (DISPLAY switch) is set to SAVE, only one latch strobe is allowed to pass to pin 4 of U854B. Another latch strobe cannot be passed until S231 is pushed to the CLEAR TEST position and released.

In DMM-SAVE operation, all the cathodes of CR851, CR852, and CR853 are HI. This sets pin 9 of U854C and pin 12 of U858B HI. The HI on pin 9 of U854C prevents the latch strobe from passing through U854C.

The first DMM latch strobe occurring after S231 is set to SAVE, clocks U858B. The HI on pin 12 of U858B is passed to pin 9 of U858B. This HI is inverted through U854B. The resulting negative going transition on pin 4 of U854B causes latching. DMM latch strobe pulses continue to occur at pin 3 of U826A. However, they are not passed to pin 4 of U854B. DMM measurements continue but they are not latched into the Storage Registers. Another measurement cannot be latched until S231 is set to CLEAR TEST.

When S231 is set to CLEAR TEST, another measurement is latched into the Storage Registers as follows:

1. When S231 is set to CLEAR TEST, the cathode of CR851 is set LO. This sets pin 9 of U854C and pin 12 of U858B LO. The next occurring latch strobe clocks the LO on pin 12 of U858B to pin 9. As long as S231 is held in the CLEAR TEST position, the circuit operates as described in DMM-NORM operation. The latch strobes pass through U854C and U854B. However, while S231 is held in the CLEAR TEST position, the Display circuit causes ±8.8.8.8.8 to be displayed.

2. When S231 is released, it returns to the SAVE position. The circuit now operates as just described. The next occurring latch strobe clocks U858B causing pin 4 of U854B to step LO.

Non-DMM Latching

In non-DMM functions, latching can be initiated by either a signal from the Counter Gate Logic (applied to pin 1 of U826A) or a manual CLEAR pulse (applied to pin 12 of U916D or to pin 5 of U816B which are shown on Diagram 7).

NON-DMM, NORM OPERATION. In non-DMM functions when S231 is set to NORM, the cathodes of CR852 and CR853 are set LO. This sets pin 9 of U854C and pin 12 of U858B LO. The LO on pin 12 of U858B ensures pin 9 of U858B and pin 6 of U854B are LO. Therefore, U854C and U854B operate as inverters (because one input of each is held LO). The signal appearing at pin 3 of U826A is passed through U854C and U854B. Latching occurs on the negative going transition of the signal on pin 3 of U826A.

NON-DMM, SAVE OPERATION. In non-DMM, non-Totalize function when S231 (DISPLAY switch) is set to SAVE, the Counter Gate Logic is allowed one measurement cycle, then held off (see Counter Gate Reset and Holdoff Logic and Fig. 6-38). Therefore no pulses will occur at pin 2 of U828A. S231 must be set to CLEAR TEST to allow another latch strobe pulse to be generated.

When S231 is set to CLEAR TEST, pin 4 of U816B (manual clear) steps HI. This is passed through U826B, U828D, U826A, U854C, and U854B (see Fig. 6-39). Pin 4 of U854B steps HI. When S231 is released, pin 4 of U826B steps LO. As just described, this is passed to pin 4 of U854B. The resulting negative going transition on pin 4 of U854B causes latching.

If S231 is set to SAVE, a manual clear cannot be generated by setting S295 to DOWNRANGE. This is because pin 13 of U916D is pulled HI through R820C (see diagram 7).

TOTALIZE OPERATION. In the Totalize function, the Counter Gate Reset and Holdoff Logic causes the Counter Gate Logic to supply a 100 Hz signal to pin 13 of U816D (see Fig. 6-37). This produces latch strobe signals at a 100 Hz rate. The Display is updated 100 times a second providing continuous display of the count as it accumulates. In the Totalize function, the Counter Reset Logic is partially disabled. To reset the Counter, a manual CLEAR pulse must be generated.

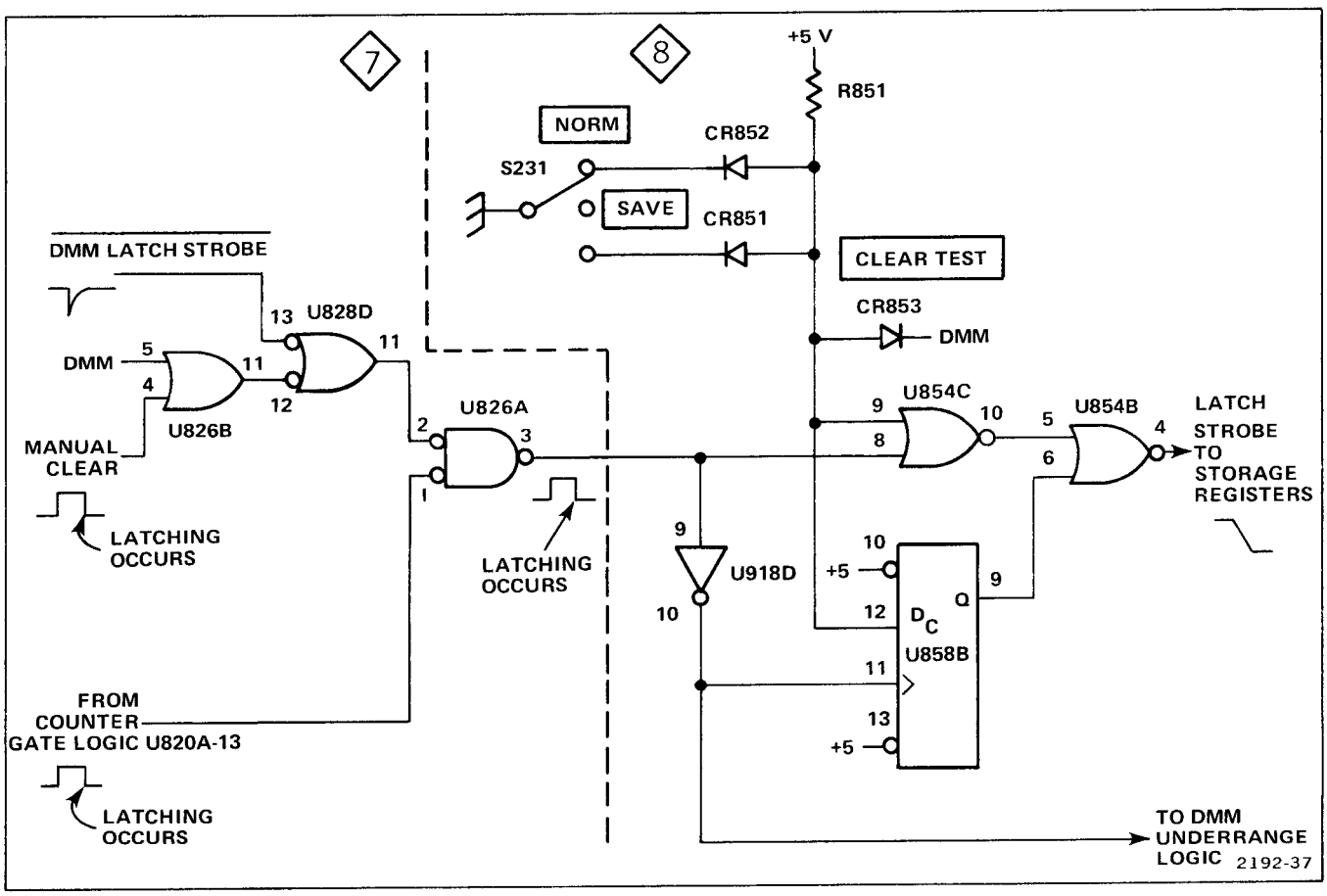

Fig. 6-39. Simplified diagram of the Latch Strobe Logic.

COUNTER RESET LOGIC 7 8

The Counter Reset Logic resets the Decade Counters to zeros. Figure 6-40 shows the Counter Reset Logic with a timing diagram.

In all functions except Totalize and DMM functions and when the DISPLAY switch is set to NORM, the signal from the Counter Gate Logic steps LO at the end of a measurement. After a delay determined by U820A in the Counter Gate Logic, this signal steps high and triggers U820B. Pin 5 of U820B steps HI and stays HI for a time determined by C824 and R824. This sets pin 2 of U806A HI causing pin 1 to go LO. The resulting negative-going transition resets Decade Counter U840. This negative-going transition is inverted through U825A. The resulting positive-going transition resets Decade Counters U842 and U844. This positive going pulse also returns U848A in the Counter Underrange Logic, U848B in the Counter Overrange Logic, and U856B in the DMM Underrange Logic to their initial states.

When in the TOTALIZE function, pin 11 of U820B is set LO. This holds pin 5 of U820B LO which blocks the reset path through U820B (pin 5 of U820B remains LO). In TOTALIZE, the Counter can only be reset manually by setting S231 (DISPLAY switch) to CLEAR TEST or by setting S295 (RANGE switch) to DOWNRANGE. In either case a CLEAR pulse is generated in the Counter Gate Reset and Holdoff Logic and supplied to pin 3 of U806A through C804.

In DMM functions, the Decade Counters count to 20000, roll over to 00000, and continue counting. No reset is required by the Decade Counters except at the instant a DMM function is selected. The DMM reset pulse ensures bits 2, 3, and 4 of U844A (pins 5, 6, and 7) are set to zero. Since the maximum count in DMM functions is 19999 (due to U850D), bits 2, 3, and 4 of U844A are not used. They must be set to zeros to prevent erroneous readings. Although the DMM reset pulse is not needed to reset the Decade Counters in DMM functions, it is needed to reset the DMM Underrange Logic.

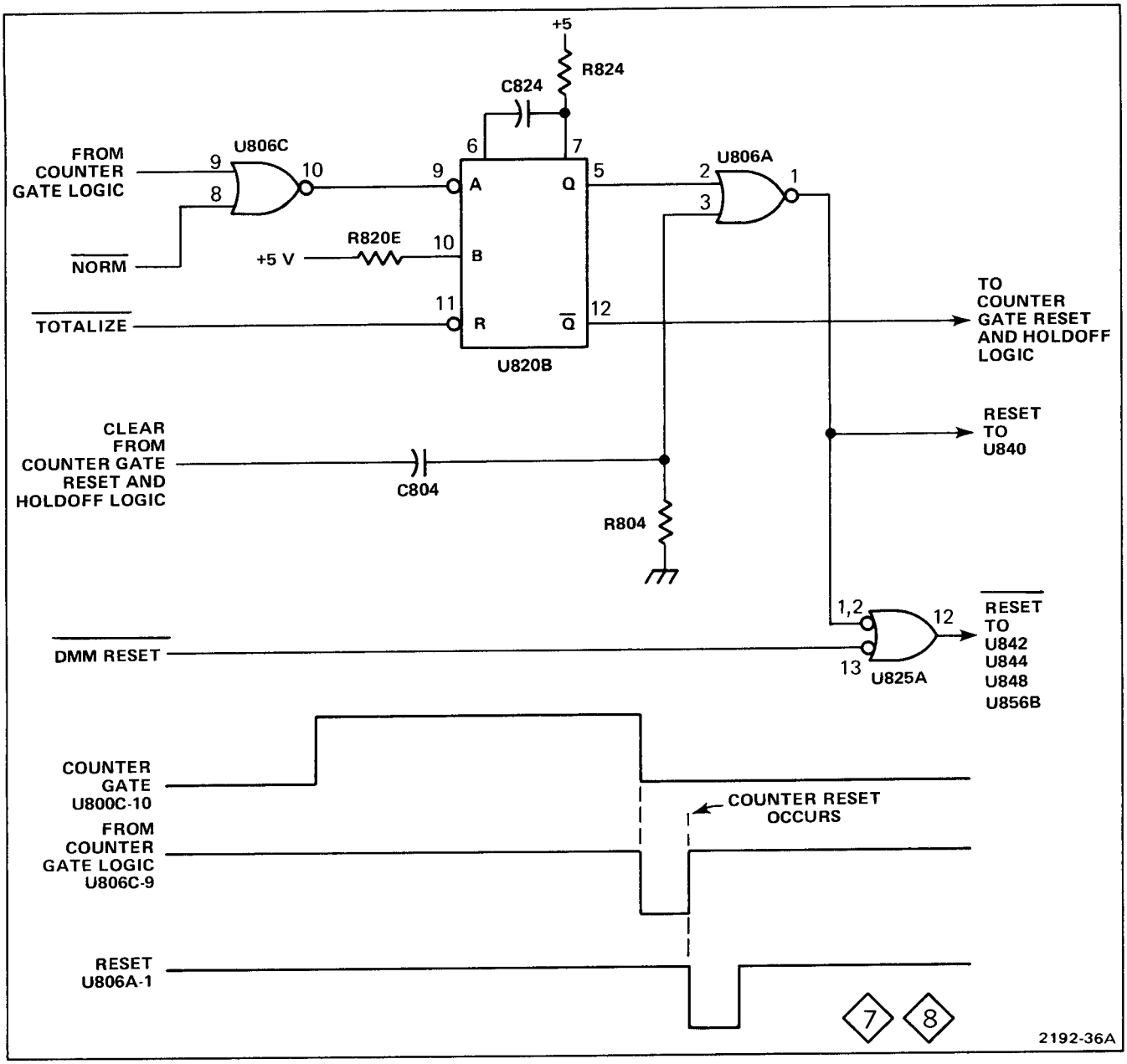

Fig. 6-40. Counter Reset Logic with a timing diagram.

COUNTER OVERRANGE LOGIC 7 8

Figure 6-41 shows a diagram of the Counter Overrange Logic and the Counter Overrange Blanking Logic. The Counter Overrange Logic consists of U960A and U848B.

A counter overrange condition is sensed when the most significant bit of the most significant digit (pin 7 of U844A) steps from HI to LO before a counter reset pulse occurs. This happens when the count steps from 99999 to 00000. The resulting negative going transition sets pin 11 of U848B HI through inverter U960. This causes pin 13 of U848B to step HI. This HI is supplied to the Autorange Logic and the Counter Overrange Blanking Logic.

As soon as a counter overrange condition is sensed, pin 10 of U924C in the Counter Gate Logic steps LO. If S231 (DISPLAY switch) is set to NORM, this causes the counter reset pulse to be generated (see Fig. 6-37). The counter reset pulse sets pin 10 of U848B HI which resets U848B. When U848B resets, pin 13 of U848B steps LO. Also, when the counter reset pulse is generated, U818 in the Counter Gate Reset and Holdoff Logic is triggered (see Fig. 6-38). This resets the Counter Gate Logic.

COUNTER OVERRANGE BLANKING LOGIC 7 8

Figure 6-41 shows a diagram of the Counter Overrange Logic and the Counter Overrange Blanking Logic. The Counter Overrange Blanking Logic consists of U826B, U926C, U950A, U940E, and U816A.

Overrange Operation

When a counter overrange condition is sensed, pin 5 of U950A is set HI through U926C. After a short delay (caused by propagation delays) the signal from the Counter Gate Logic steps LO. After a time (determined by R820A and C820, see Fig. 6-37) this signal steps HI. The resulting positive going transition on pin 3 of U950A causes pin 1 of U950A to step HI. While pin 1 of U950A is HI, the 2 Hz clock applied to pin 2 of U816A is passed to the Display circuit through the DMM Overrange Logic. This causes the display to flash at a 2 Hz rate.

The display continues to flash until a valid measurement is completed. At the end of a valid measurement, pin 5 of U950A is LO and pin 3 of U950A steps LO. When pin 3 of U950A steps HI again, the LO on pin 3 is passed to pin 1. Now the 2 Hz clock cannot pass through U816A.

Underrange Operation

At the end of an underrange measurement, the Autorange Logic downranges which causes the decimal point location to shift. Therefore, during the next measurement cycle, the displayed count will be correct but the decimal point location will be wrong. When the counter gate is sufficiently long, this could be viewed as an erroneous reading. This circuit prevents this by causing the display to flash at a 2 Hz rate until a valid measurement is made.

The circuit operates as follows:

1. When an underrange condition does not exist, pin 5 of U950A is held LO through CR946 and U926C (see Fig. 6-41). The circuit operates as described under Overrange Operation. Also, when in the Totalize function, pin 5 of U926C is held LO through CR946 and U926C.

2. When an underrange condition does exist and when not in the Totalize function, pin 5 of U950A is set HI through CR946 and U926C.

3. If the underrange condition still exists when the measurement is completed, pin 5 of U950A will still be HI when the signal from the Counter Gate Logic clocks pin 3 of U950A. Therefore pin 1 of U950A causes U816A to pass the 2 Hz clock to the Display circuit through the DMM Overrange Logic.

4. If the next measurement is not underrange, pin 5 of U950A will be LO when pin 3 of U950A is clocked. Therefore pin 1 of U950A goes LO and prevents the 2 Hz clock from passing through U816A.

If operating in a minimum range, the Counter Underrange Logic does not produce an underrange indication. Therefore the Autorange Logic does not downrange or shift the decimal point location. Since an underrange signal is not generated, the cathode of CR946 remains LO and the display does not flash.

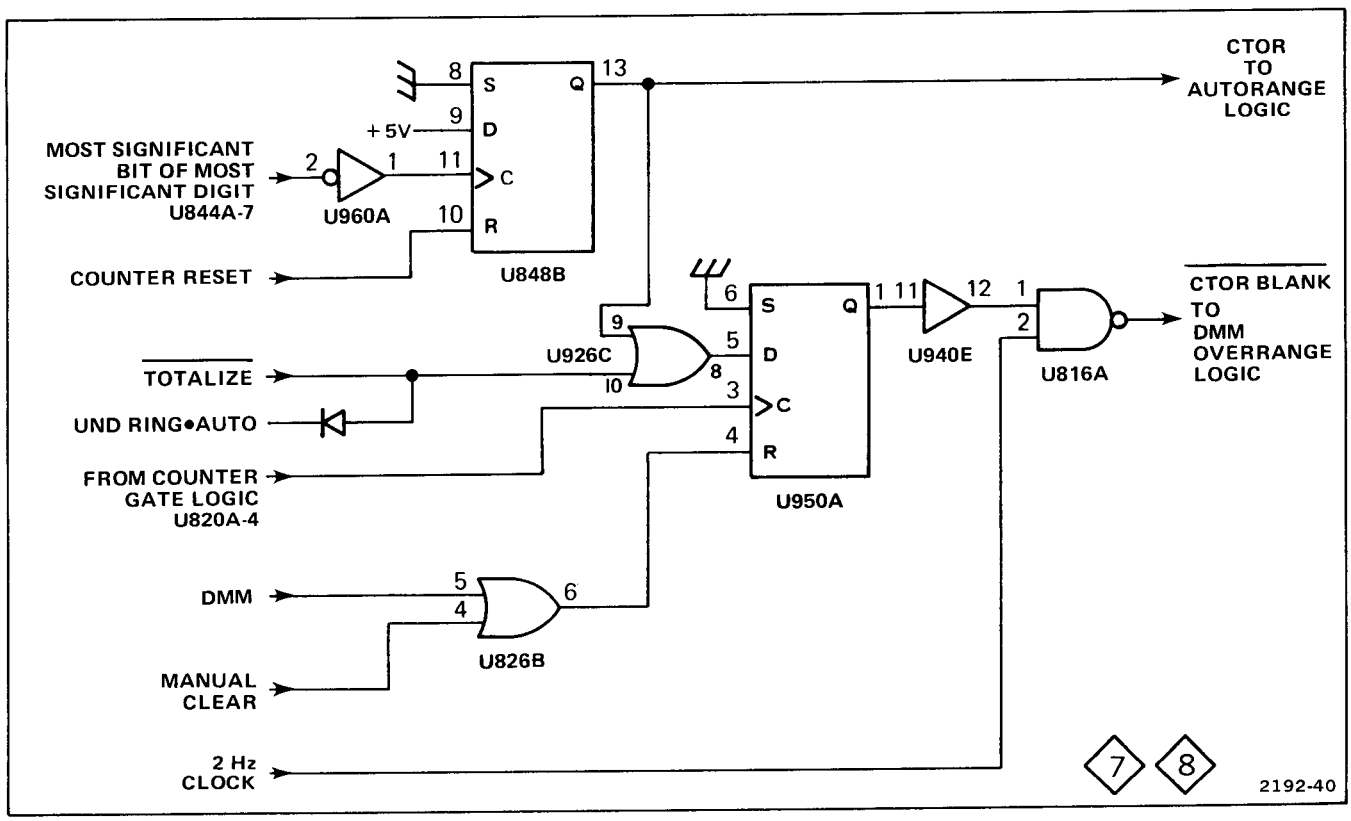

Fig. 6-41. Counter Overrange Logic and Counter Overrange Blanking Logic.

COUNTER UNDERRANGE LOGIC 8

Figure 6-42 shows a diagram of the Counter Underrange Logic with a timing diagram. This circuit senses a counter underrange condition when a count of 8000 is not reached before the end of a measurement.

Non-Underrange Operation

In non-underrange operation, pin 6 of U848A is set HI at a count of 8000. This causes pin 2 of U848A to go LO. At the end of the measurement, the counter latch strobe (applied to pin 6 of U952B) steps HI. Since pin 5 of U952B is LO due to the LO on pin 2 of U848A, the output of U952B remains HI.

Shortly after the counter latch strobe returns LO, a counter reset pulse is generated (see Counter Reset Logic). The delay is due to propagation delays. The counter reset pulse sets pin 3 of U848A HI. This causes pin 2 of U848B to step HI. Now the circuit is ready to check for an underrange condition in the next measurement.

When the minimum allowable range is selected, pin 5 of U848A is set HI. This causes pin 2 to go LO at counter reset. On following measurement cycles, pin 2 of U848A holds pin 5 of U952B LO. Therefore (in the minimum allowable range) pin 4 of U952B remains HI even when an underrange condition exists.

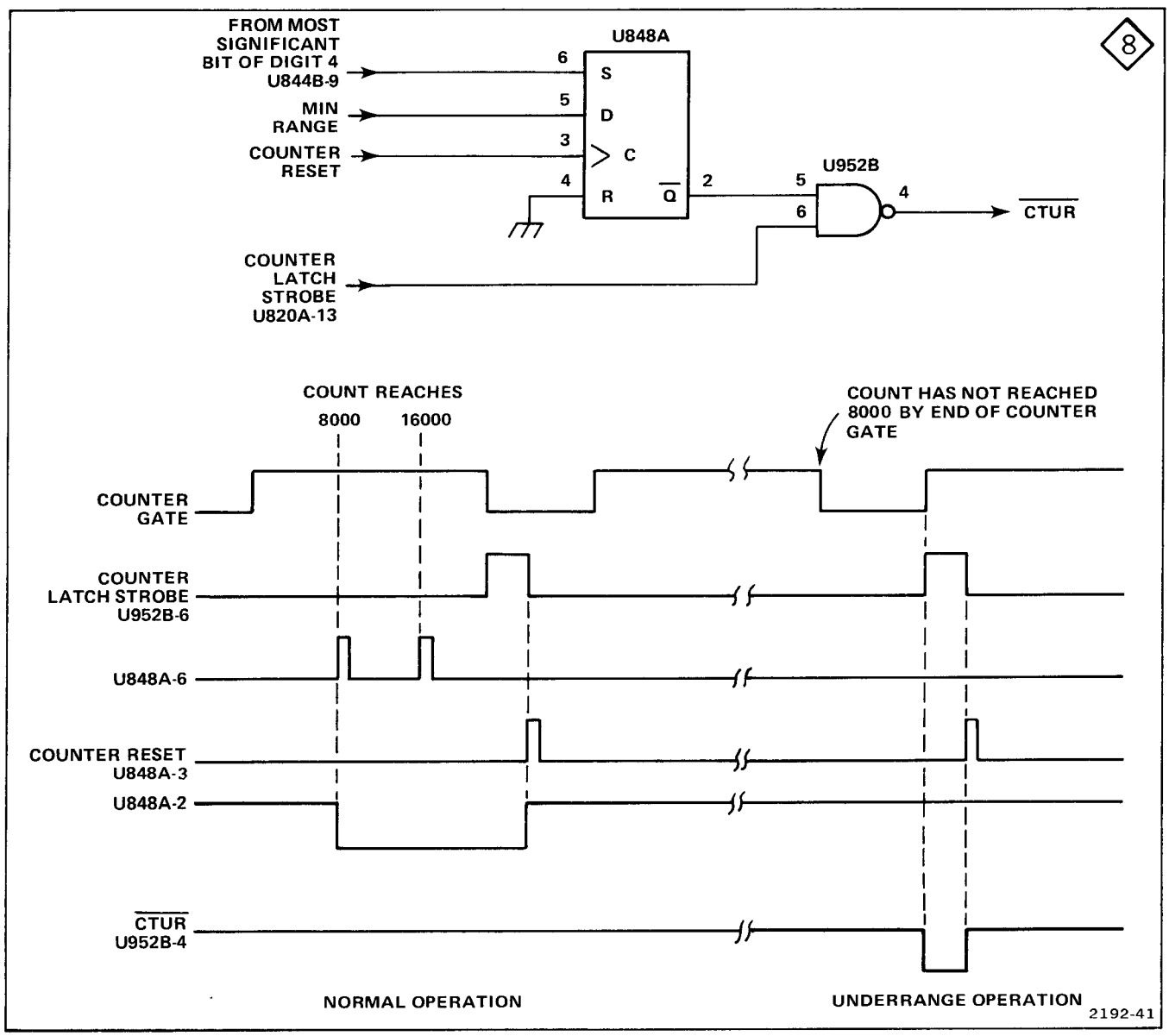

Fig. 6-42. Counter Underrange Logic with a timing diagram.

Underrange Operation

In underrange operation, a count of 8000 is not reached before the end of a measurement. Therefore, pin 6 of U848A remains LO and pin 2 remains HI. Pin 2 of U848A sets pin 5 of U952B HI. At the end of the measurement, the counter latch strobe sets pin 6 of U952B HI. Therefore the output of U952B steps LO to indicate an underrange condition. This LO is supplied to the Autorange Logic.

DMM UNDERRANGE LOGIC (8)

Figure 6-43 shows a diagram of the DMM Underrange Logic. The DMM Overrange Logic is described in the DMM description. The DMM Underrange Logic senses an underrange condition if the count does not reach 1800 before zero crossing (when a DMM latch strobe is generated).

Non-Underrange Operation

When a count of 1800 is reached, both inputs of U850A are HI at the same time. The output of U850A steps HI setting pin 8 of U856B HI. This causes pin 12 of U952D to step LO setting pin 13 of U952D LO. At zero crossing, a DMM latch strobe signal is generated. The latch strobe signal momentarily sets pin 12 of U952D HI. Since pin 13 of U952D is LO, the output of U952D remains HI.

When a DMM reset pulse is generated, pin 10 of U856B is set HI. This resets U856B causing pin 12 to go HI.

Underrange Operation

If a count of 1800 is not reached before zero crossing, both inputs of U850A are never HI at the same time. Therefore, pin 8 of U856B is never set HI and pin 12 of U856B remains HI. When a DMM latch strobe is generated, both pins of U952D are HI at the same time. The resulting LO at the output of U952D indicates an underrange condition and is supplied to the Autorange Logic.

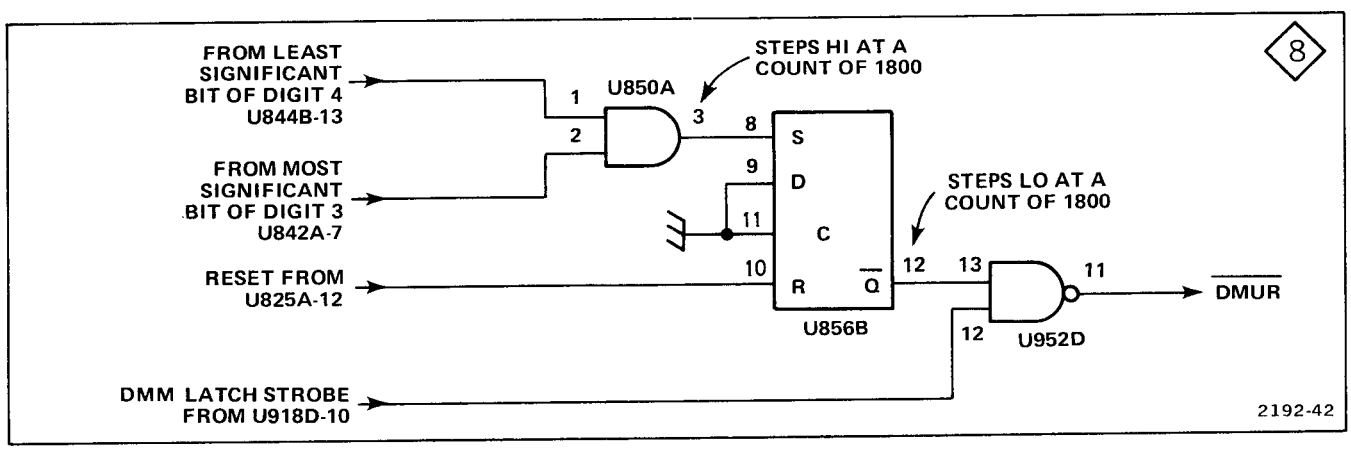

Fig. 6-43. DMM Underrange Logic.

DISPLAY

Figure 6-44 shows a block diagram of the Display circuit.

The Sign Blanking Logic and Polarity Indication Logic control the front panel + and − indicators.

The Range Indication Logic controls four front panel mounted LEDs. One of these LEDs lights to indicate the operating range of the instrument. In some functions, such as Totalize, none of the LEDs light. There are eight possible operating ranges (S0 through S7) which are controlled by the Autorange Logic. Not all of the ranges are allowed for every function (see Illegal States Logic).

The Decimal Point Logic lights one decimal point at a time. The decimal point displayed is dependent on the range and function selected This circuit also supplies a control signal to the Leading Zero Suppression Logic.

The Leading Zero Suppression Logic blanks leading zeros in the left three positions except for the first zero to the left of a decimal point.

The BCD to Seven-Segment Decoder Driver converts the strobed BCD information from the Storage Registers to signals which Drive the Seven-Segment Displays.

The Digit Select Logic supplies gate signals to each of the seven-segment displays and to each of the Storage Registers. These signals gate only one seven-segment display and one Storage Register at a time. Therefore, only one BCD to Seven-Segment Decoder Driver is needed.

SIGN ENABLE LOGIC 7 10

Figure 6-45 shows a simplified diagram of the Sign Enable Logic. A LO at either point X or point Y (pin 1 or pin 2 of U910A respectively) displays (enables) the polarity sign. The following describes the conditions which cause point X or point Y to go LO.

Point X

Pin 1 of U910A is set LO to display the polarity sign in any of the following conditions:

1. Point X goes LO when in the Totalize function and when S231 (DISPLAY switch) is set to NORM (sets pin 5 of U804B HI). The displayed sign indicates the Counter is open and will count any pulses occurring at the A input.

2. Point X is active in functions where the Counter Gate Logic is active. Point X is set LO at the beginning of the counter gate and the sign displayed until the Counter Gate Logic is reset (after Counter Gate Logic Holdoff time). This causes the sign to flash which indicates the 851 is actively making measurements. Point X is held LO during holdoff to allow the sign to be seen during short duration measurements.

Point Y

Point Y steps LO to display the polarity sign only in DMM functions other than Duty Factor, Ohms, Line, or AC Volts. In non-DMM functions pin 4 of U912B is set LO forcing point Y HI.

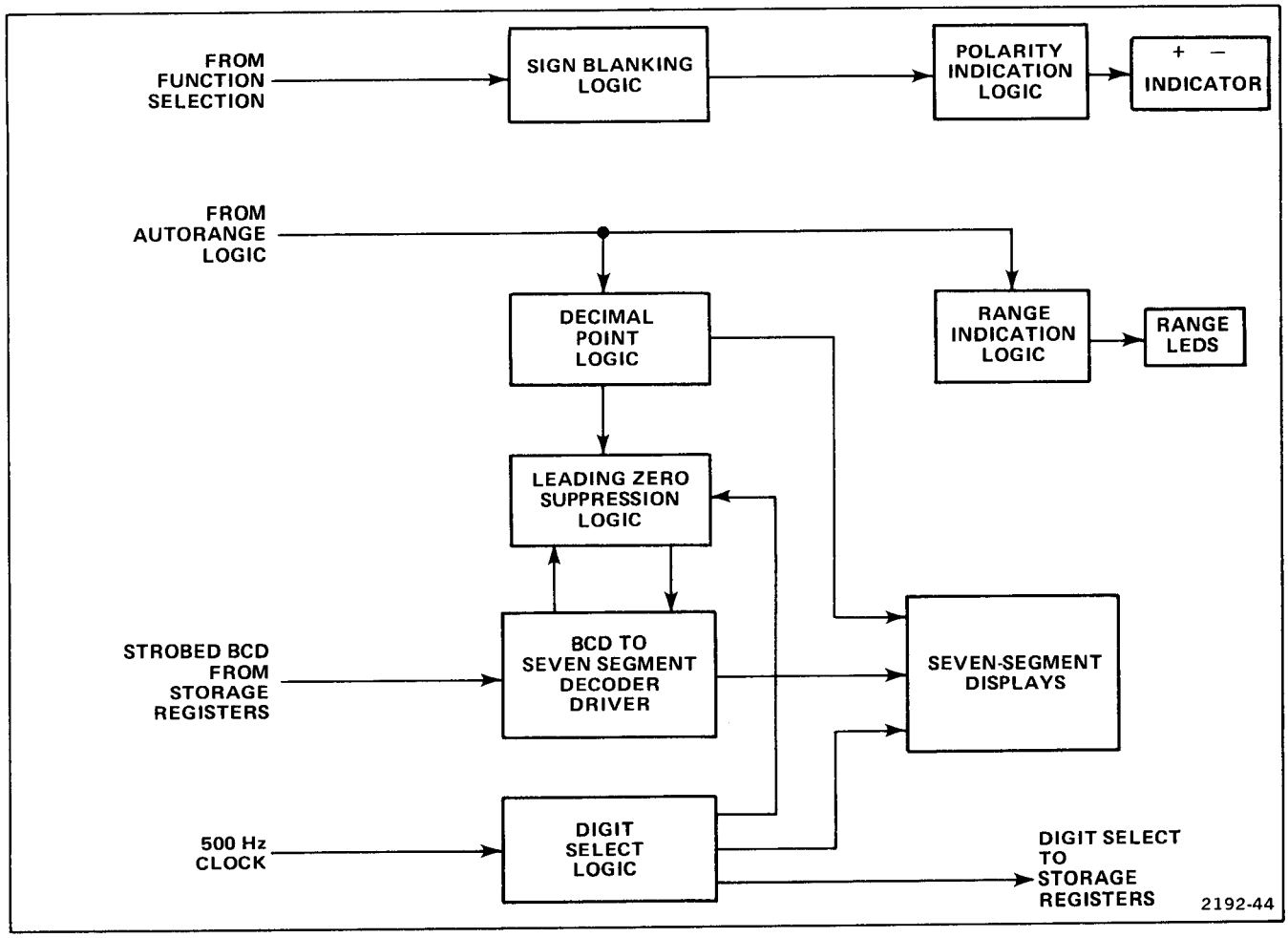

Fig. 6-44. Block diagram of the Display circuit.

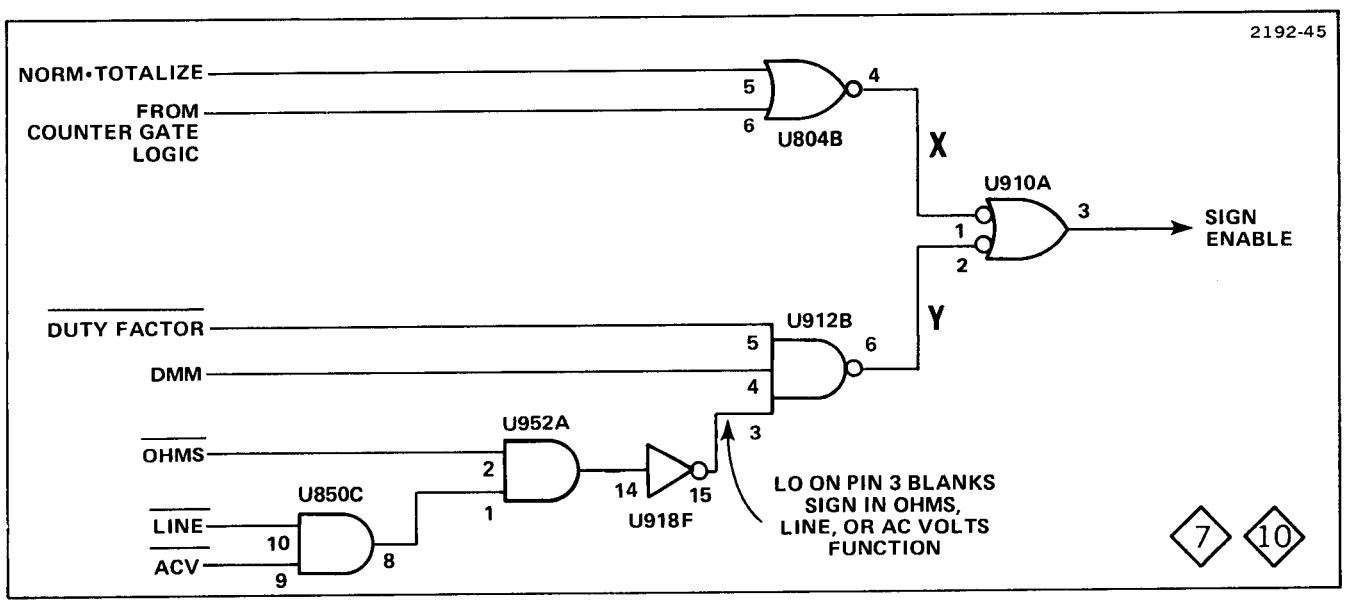

Fig. 6-45. Simplified diagram of the Sign Enable Logic.

POLARITY INDICATION (11)

Figure 6-46 shows a diagram of the Polarity Indication Logic with a truth table. This circuit controls the front panel indication. A HI at point C enables the plus sign and a LO at point C enables the minus sign. A LO at A blanks the sign unless S231 is in the CLEAR TEST position (sets point B LO). If point B is LO, both signs are displayed regardless of the states of points A and C.

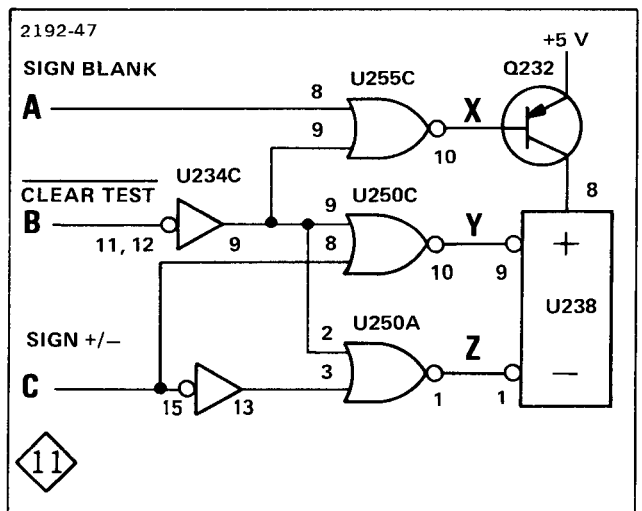

A	B	C	X	Y	Z	SIGN
H	H	H	L	L	H	+
H	H	L	L	H	L	–
X	L	X	L	H	H	+ –
L	H	X	H	X	X	NONE

Fig. 6-46. Diagram of the Polarity Indication Logic with a truth table.

RANGE INDICATION LOGIC (10)

This circuit controls four front panel indicators which indicate the operating range of the 851.

The Range Indication Logic is shown on diagram 10. The Range Indication Logic consists of U988, U980A, U984D, U914C, and U912C. Table 6-3 shows the range light displayed for all combinations of 851 functions and ranges.

The following describes the conditions which cause each of the indicators to be displayed.

V—ms

The V—ms indicator lights in any of the following conditions:

1. In the AC Volts, DC Volts, Peak Volts, Line Volts, or Threshold functions (sets pin 13 of U984D LO).

2. In a Time function when in the S0 range (sets pin 12 of U984D LO).

MΩ—MHz

The MΩ—MHz indicator lights in Frequency or Ohms functions when Q3 is HI. This sets both inputs of U988A HI. Q3 is HI in the S4, S5, or S6 ranges (see Diagram 8).

kΩ—kHz

The kΩ—kHz indicator lights in Frequency or Ohms functions when in the S1, S2, or S3 range (sets both inputs of U988B HI).

Ω—μs

The Ω—μs indicator lights in non-Count functions when in the S0 range (sets both inputs of U988D HI).

DECIMAL POINT LOGIC (10)

The Decimal Point Logic is shown on diagram 10. The circuit consists of U998 and the associated circuitry controlling the inputs to U998. Table 6-3 shows all combinations of 851 functions and ranges and indicates which decimal point will be displayed. In the CLEAR TEST position of S231 (see diagram 11) all four decimal points are enabled through CR251, CR252, CR253, and CR254. In Count functions, one input of each of the gates in U998 is set LO. This disables all decimal points in Count functions.

Table 6-3

DECIMAL POINTS AND RANGE LIGHTS DISPLAYED FOR ALL COMBINATIONS OF 851 FUNCTIONS AND RANGES

	S0		S1		S2		S3		S4		S5		S6	
Ω	3	C	5	B	4	B	3	B	5	A	4	A	3	A
ACV	-	-	5	D	4	D	3	D	2	D	-	-	-	-
DCV	-	-	5	D	4	D	3	D	2	D	-	-	-	-
−PEAK V	-	-	4	D	3	D	2	D	-	-	-	-	-	-
+PEAK V	-	-	4	D	3	D	2	D	-	-	-	-	-	-
% DUTY CYCLE	-	-	3	*	-	-	-	-	-	-	-	-	-	-
FREQ	-	-	-	-	4	B	3	B	5	A	4	A	-	-
PERIOD	3	C	5	D	4	D	3	D	2	D	-	-	-	-
WIDTH	3	C	5	D	4	D	3	D	2	D	-	-	-	-
TRNSN TIME (HI→LO)	3	C	5	D	4	D	3	D	2	D	-	-	-	-
TOTALIZE	-	-	*	*	*	*	*	*	*	*	-	-	-	-
FREQ RATIO A/C	-	-	*	*	*	*	*	*	*	*	-	-	-	-
A COUNT (B→C)	-	-	*	*	*	*	*	*	*	*	-	-	-	-
A TRNSN (B→C)	-	-	*	*	*	*	*	*	*	*	-	-	-	-
TIME (B→C)	3	C	5	D	4	D	3	D	2	D	-	-	-	-
TIME (B·C)	3	C	5	D	4	D	3	D	2	D	-	-	-	-
THRESH A LO	-	-	4	D	3	D	2	D	-	-	-	-	-	-
THRESH A HI	-	-	4	D	3	D	2	D	-	-	-	-	-	-
THRESH B	-	-	4	D	3	D	2	D	-	-	-	-	-	-
THRESH C	-	-	4	D	3	D	2	D	-	-	-	-	-	-
LINE V	-	-	4	D	3	D	2	D	-	-	-	-	-	-
TEMP °C	-	-	3	*	-	-	-	-	-	-	-	-	-	-

*** NONE SHOWN**

- This function does not operate in this range. This is an illegal state for this function.

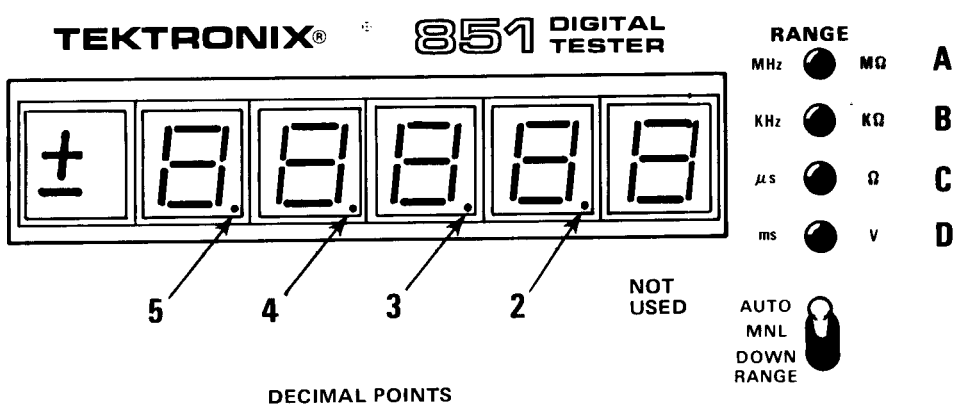

2192-95A

LEADING ZERO SUPPRESSION LOGIC 11

The Leading Zero Suppression Logic is shown on diagram 11. This circuit consists of U234A, U234B, U250B, U250D, U255A, U255B and U255D. This circuit blanks leading zeros in the left three positions except for the first zero to the left of a decimal point.

The 5 seven-segment displays are strobed in a 5-4-3-2-1 (left to right) sequence (see Digit Select Logic). Assume the sequence is just beginning and digit 5 is being selected. Pin 3 of U260 (DP5) steps LO. This sets pin 6 of U234B LO through C252 and sets pin 7 of U234B HI setting pin 5 of U270 LO through U234A. While pin 5 of U270 is LO, all outputs of U270 will be LO (all segments blanked) when a zero is supplied to its inputs (see BCD to Seven-Segment Decoder Driver). Numbers other than zero are not blanked.

To display zeros, U234B must be reset. This can be done in three ways.

1. If a BCD count other than zero is supplied to U270, segment c and/or segment b will light. This sets pin 5 of U234B LO through CR272 and/or CR273. U234 resets causing pin 5 of U270 to go HI. Any following zeros will be displayed.

2. If a zero is displayed at the same time the decimal point to its right is displayed, zero suppression is removed. This displays a zero to the left of the decimal point when the display is less than 1. To do this, both inputs of U255D, U255A, or U255B must be set LO at the same time. This sets pin 5 of U234B LO through U250D or U250B. This resets U234B causing pin 5 of U270 to go HI.

3. If digits 5, 4, and 3 were all zeros, zero suppression is removed to display digits 2 and 1 even if they are zeros. Pin 11 of U250D goes HI when digit 2 is selected. Therefore, the output of U250D goes HI and resets U234B. This sets pin 5 of U270 HI to remove zero suppression.

BCD TO SEVEN-SEGMENT DECODER DRIVER 11

This circuit consists of U270, U265, and part of U260. This circuitry is shown on diagram 11.

Only one digit of the display is on at a time (see Digit Select Logic). Therefore, only one BCD to Seven-Segment Decoder is needed. The Digit Select Logic causes one of the Storage Registers to supply its BCD count to pins 1, 2, 6, and 7 of U270. This is converted to seven segment information at the outputs of U270. The outputs of U270 are inverted through U265 and part of U260. A LO at the outputs of U265 or pin 14 of U260 lights a segment of the digit selected by the Digit Select Logic.

Pin 4 of U270 is the blanking input. The Overrange Display Blanking Logic sets pin 4 LO to blank the entire display (sets pins 9 through 15 LO regardless of the BCD count supplied to U270).

Pin 3 of U270 is the lamp test input. A LO on pin 3 causes pins 9 through 15 to go HI regardless of the BCD count supplied to U270. This lights all seven segments of the digit selected.

Pin 5 of U270 is the zero blanking input. The output of the Leading Zero Suppression Logic is connected here. A LO at pin 5 causes pins 9 through 15 to go LO when a BCD count of 0 is supplied to the inputs of U270.

Pin 9 of U265 and pin 9 of U260 are enable inputs. A HI on pin 9 sets all the outputs HI regardless of the inputs. A LO on pin 9 allows U265 and U260 to operate as hex-inverters. In this circuit both these pins are wired LO.

SEVEN-SEGMENT DISPLAYS 11

There are 5 seven-segment displays in the 851. The displays are strobed in a 5-4-3-2-1 sequence (left to right). Each display is on 20 percent of the time. The outputs of the BCD to Seven-Segment Decoder are connected to corresponding inputs of the 5 displays in parallel. However, since the common anode connection of only one display is connected to +5 volts at a time, only one digit will be displayed at a time (see Digit Select Logic).

DIGIT SELECT LOGIC 11

The Digit Select Logic is shown on diagram 11. The circuit consists of U490, U492, Q220, Q221, Q225, Q226, Q228, and five of the inverters in U260. The sixth inverter drives one of the segments of the seven-segment displays.

The five-digit display of the 851 is strobed in a 5-4-3-2-1 sequence. The Digit Select Logic controls which Counter Storage Register supplies BCD information to the Display circuit and also enables the corresponding seven-segment display. The selected seven-segment display is enabled by turning on the associated transistor. This transistor connects the common anode connection of the display to +5 volts. The corresponding segments of the five displays are connected in parallel. However, since only one common anode connection is connected to +5 volts at a time, only one digit will be displayed at a time.

The five digits are selected by the four outputs of U490 and the output of U492. Of these, only one will be HI at a time. The sequence of events during circuit operation is as follows:

1. U490 is a four-bit shift register. Assume all four of its outputs are LO. These four outputs are connected to the inputs of U492. Since they are all LO, the output of U492 is HI. This HI selects digit 5 by turning on Q228 through U260.

2. While digit 5 is being selected, the output of U492 sets the serial input of U490 HI. On the falling edge of the next clock pulse, this HI is clocked to the Q_a output of U490. The HI on the Q_a output selects digit 4 by turning on Q226 through U260. When the Q_a output steps HI the output of U492 steps LO.

3. On successive clock pulses, the HI is clocked to Q_b, Q_c, then Q_d selecting digits 3, 2, then 1 respectively. On the first clock pulse after digit 1 is selected, the HI is clocked out of the shift register (U490). All four outputs of U490 will be LO. This restores the original assumed condition. The output of U492 goes HI to select digit 5.

AUTORANGE LOGIC

Autorange Logic selects one of eight possible operating ranges (S0 through S7). However, not all eight ranges are permitted for each function. If an overrange or underrange condition is sensed, this circuit can automatically shift up or down one range depending on the condition sensed. This circuit can also be operated manually.

AUTORANGE LOGIC BLOCK DIAGRAM DESCRIPTION

Figure 6-47 shows a simplified block diagram of the Autorange Logic circuit.

The Range Counter consists of U944 and U922. U944 is a 4-bit binary counter with bit 4 unused. This provides eight possible output conditions which correspond to the eight possible ranges. When clocked, U944 steps up or down one count as determined by the Uprange-Downrange Select Logic. The binary outputs of U944 are converted to decimal information by U922.

The Range Change Initiation Logic provides clock pulses to U944. When not in a minimum or maximum range, this circuit clocks U944 whenever an underrange or an overrange condition is sensed.

The Uprange-Downrange select logic senses if the range change is being generated due to an overrange or an underrange condition. Based on the sensed information, this circuit controls whether U944 counts up or down when it is clocked.

The Minimum Range Logic prevents downranging when the minimum allowable range for the function selected is reached.

The Maximum Range Logic prevents upranging when the maximum allowable range for the function selected is reached.

When the RANGE switch (S295) is set to MNL, Autorange Logic is defeated. When S295 is set to DOWNRANGE and released, U944 counts down one count. This manuallly downranges the 851 one range. The first time the RANGE switch is pushed to DOWNRANGE after the minimum allowable range for the function selected is reached, the Manual Minimum to Maximum Range Step Logic clocks U944 at a 100 Hz rate until the maximum allowable range is reached.

Illegal States Logic senses the function selected and the present operating range. When switching from one function to another the range does not change. As a result, a function can be selected where the range selected in the previous function is illegal for the present function. If this occurs, the output of the Illegal States Logic enables the preset inputs of U944. This presets the range to S1, S2, or S3 depending on the function selected.

RANGE COUNTER 9

The Range Counter consists of U944 and U922 (see diagram 9).

U944 is a presettable, 4-bit, binary counter. Only three of its outputs are used providing 8 possible output conditions. These conditions correspond to the 8 possible operating ranges. Not all of these eight ranges are allowed for all functions (see Illegal States Logic, Minimum Range Logic, and Maximum Range Logic).

Pin 5 of U944 must be LO to allow U944 to count when clocked. A LO to HI transition at the clock input (pin 15) causes the output of U944 to change by one count dependent on the state of pin 10. When pin 10 is HI, U944 counts up. When pin 10 is LO, U944 counts down.

When the Illegal States Logic sets pin 1 of U944 HI, the levels on the preset inputs (pins 3, 4, 12, and 13) are impressed on the outputs of U944. This sets the Range Counter output to the S1, S2, or S3 range dependent on the function selected.

U922 converts the three-bit binary output of U944 to decimal information. Only one of the outputs of U922 will be LO at a time to select the operating range.

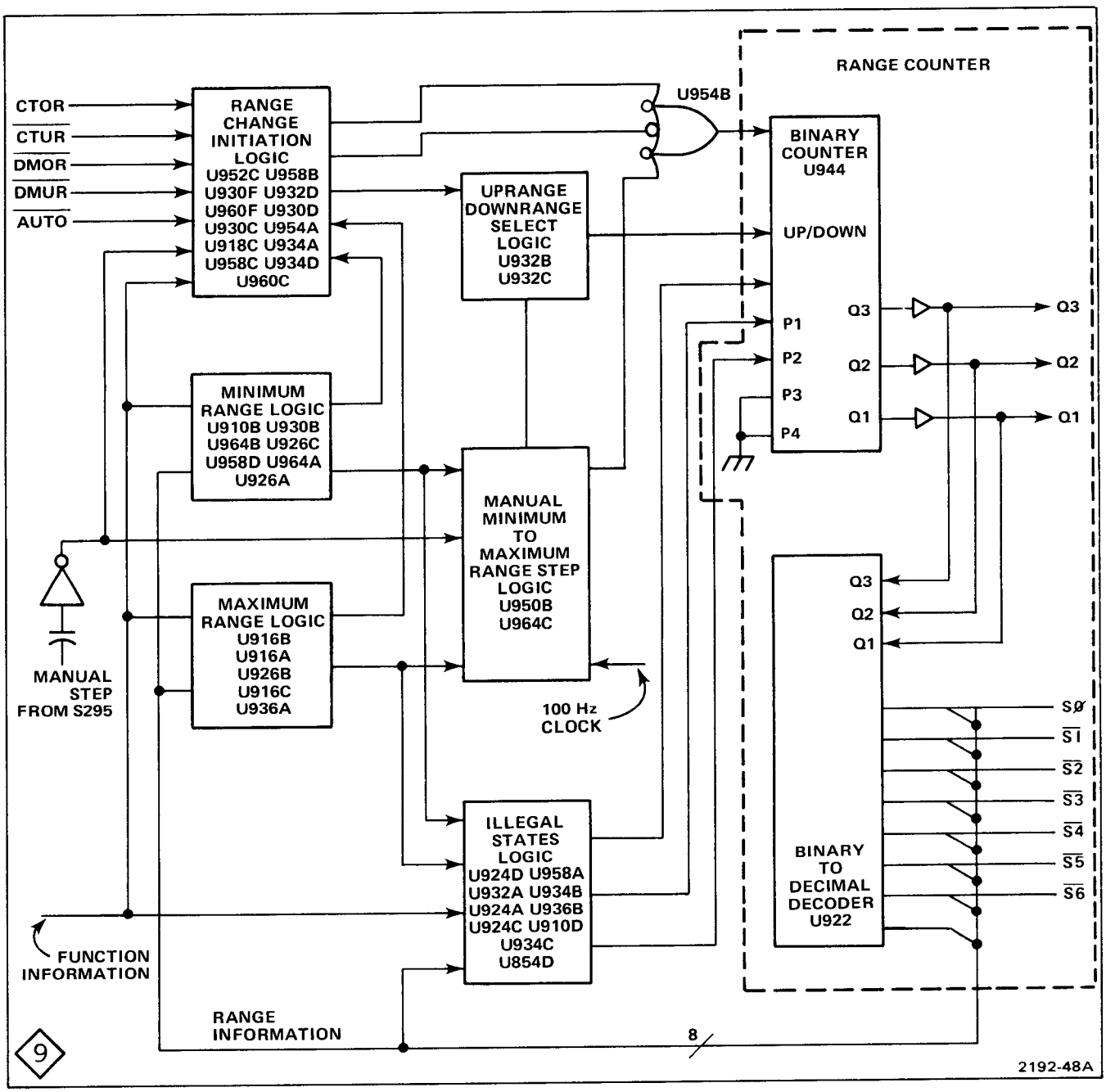

Fig. 6-47. Block diagram of the Autoranging Logic.

RANGE CHANGE INITIATION LOGIC ⟨9⟩

The Range Change Initiation Logic clocks the Range Counter whenever one of the inputs of U954B is set LO (see Fig. 6-48). An overrange condition can set pin 5 of U954B LO. An underrange condition or a manual downrange pulse can set pin 4 of U954B LO. The Manual Minimum To Maximum Range Step Logic can set pin 3 of U954B LO. The following describes the circuitry controlling pins 5 and 4 of U954B. See Manual Minimum To Maximum Range Step Logic for a description of the circuitry controlling pin 3 of U954B.

Change Due to an Overrange Condition

A LO on any input of U954B will clock the Range Counter (U944). The circuitry shown in Fig. 6-48A can set pin 5 of U954B LO when an overrange condition exists.

When either a Counter overrange condition ($\overline{CTOR}$) or a DMM overrange condition ($\overline{DMOR}$) is sensed, pin 13 of U960F steps HI. When pins 8 and 2 of U954A are both HI, the HI at pin 13 of U960F sets pin 5 of U954B LO through U954A. The resulting HI at the output of U954B clocks the Range Counter.

A LO on either pin 8 or pin 2 of U954A holds pin 5 of U954B HI even when an overrange condition is sensed. Pin 8 of U954A is held LO when the RANGE switch (S295) is not set to AUTO. This prevents automatic upranging when in the manual ranging mode. Pin 2 of U954A is held LO when operating in the maximum allowable range for the function selected (see Maximum Range Logic). This prevents upranging to an illegal range for the function selected.

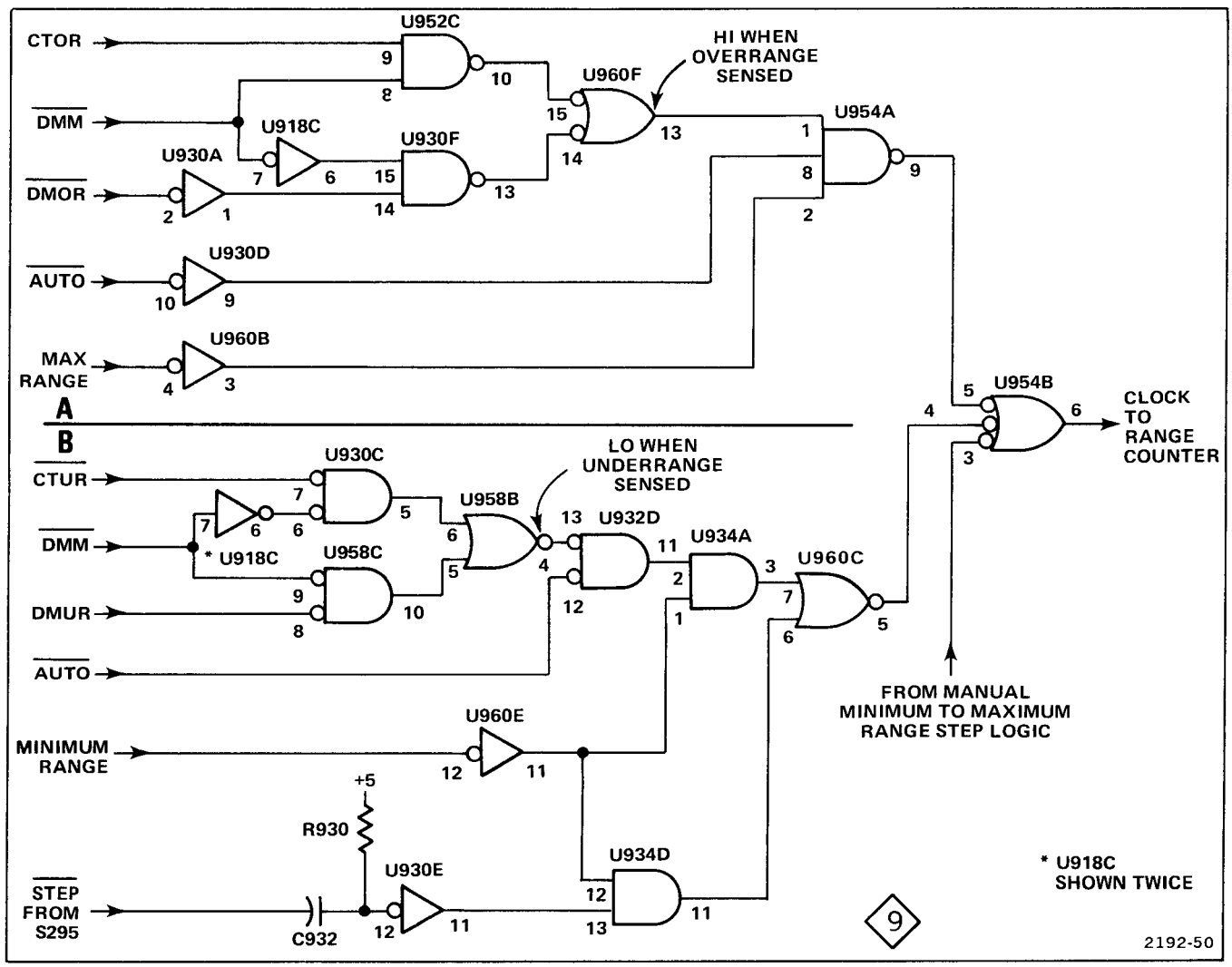

Fig. 6-48. Range Change Initiation Logic.

Change Due to an Underrange Condition or Manual Downranging

A LO on any input of U954B will clock the Range Counter (U944). The circuitry shown in Fig. 6-48B can set pin 4 of U954B LO when either an underrange condition is sensed or when the RANGE switch (S295) is set to DOWNRANGE.

When not operating in the minimum allowable range for the function selected (when pin 12 of U934D is HI), the LO generated when S295 is set to DOWNRANGE sets pin 4 of U954B LO through C932, U930E, U934D, and U960C. The resulting LO at the output of U954B clocks the Range Counter.

When either a Counter underrange ($\overline{CTUR}$) or a DMM underrange ($\overline{DMUR}$) condition is sensed, pin 4 of U958B goes LO. When the RANGE switch (S295) is set to AUTO (pin 12 of U932D LO) and the operating range is not the minimum allowed for the function selected (pin 1 of U934A HI), the LO on pin 4 of U958B sets pin 4 of U954B LO through U932D, U934A, and U960C. The resulting LO at the output of U954B clocks the Range Counter. When the RANGE switch is not set to AUTO, pin 12 of U932D is set HI. Therefore U932D prevents a LO on pin 4 of U958B from setting pin 4 of U954B LO. This prevents automatic downranging when in the manual ranging mode.

When the operating range is the minimum allowed for the function selected, pin 1 of U934A and pin 12 of U934D are set LO. The LO on pin 1 of U934A blocks the LO generated at pin 4 of U958B when an underrange condition is sensed. The LO on pin 12 of U934D blocks the manual downrange pulse. Both actions prevent downranging into an illegal range for the function selected.

UPRANGE-DOWNRANGE SELECT LOGIC 9

Figure 6-49 shows the Uprange-Downrange Select Logic. This circuit controls the Range Counter. When the output of U932C sets pin 10 of U944 HI, the Range Counter upranges when clocked. When pin 10 of U944 is set LO, the Range Counter counts down when clocked.

The following lists the possible conditions controlling the state of pin 10 of U932C:

1. During the manual minimum range step, pin 5 of U932B is set HI. This sets pin 8 of U932C LO. Therefore pin 10 of U932C is HI and the Range Counter will uprange when clocked.

2. When operating in the manual ranging mode, pin 9 of U932C is LO. If not stepping from the minimum to maximum range as described above, pin 8 of U932C is HI. Therefore pin 10 of U932C will be LO and the Range Counter will downrange when clocked.

3. When the RANGE switch (S295) is set to AUTO, pin 6 of U932B is set HI. This holds pin 8 of U932C LO. When an underrange condition is not sensed, pin 9 of U932C is LO. Therefore pin 10 of U932C is HI and the Range Counter will uprange when clocked (when an overrange condition is sensed). If an underrange condition is sensed, pin 9 of U932C is set HI. Therefore pin 10 of U932C steps LO and the Range Counter downranges.

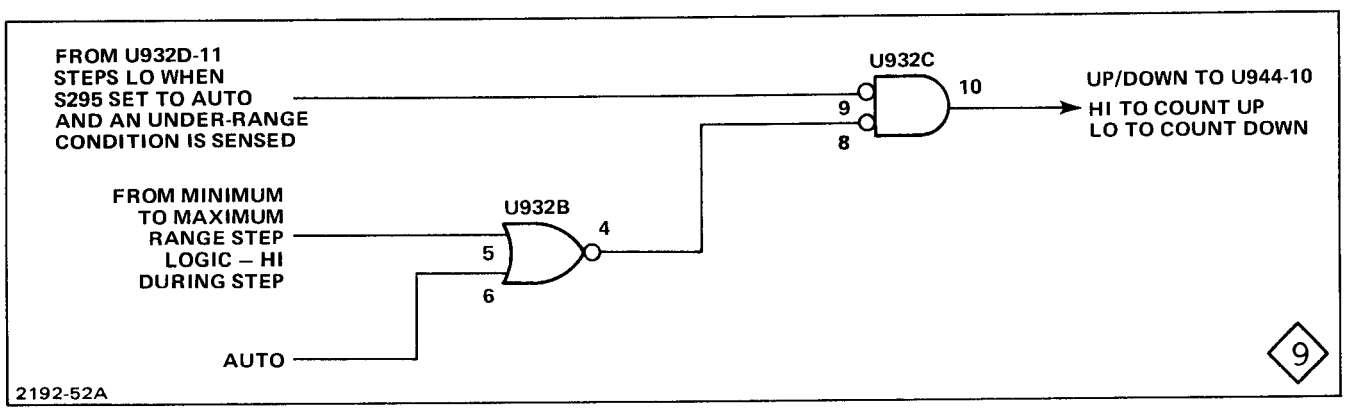

Fig. 6-49. Uprange — Downrange Select Logic.

MINIMUM RANGE LOGIC 9

Figure 6-50 shows a diagram of the Minimum Range Logic.

There are eight possible operating ranges (S0 through S7). Not all of these ranges are allowed for each function (see Tables 6-2 and 6-3). The Minimum Range Logic can partially disable the Range Change Initiation Logic to prevent further downranging when a minimum range is reached.

When a minimum range is sensed, pin 3 of U926A steps HI to prevent further downranging. The conditions causing pin 3 of U926A to step HI are as follows:

1. In the S0 range when in Ohms or Time functions (sets both inputs of U964B HI).

2. In the S1 range when in any function except Ohms or Time (sets both inputs of U926C LO).

3. In the S2 range when in the Frequency function (sets both inputs of U958D LO).

MAXIMUM RANGE LOGIC 9

The Maximum Range Logic is shown on diagram 9. The circuit consists of U916B, U916A, U926B, U916C, and U936A.

There are eight possible operating ranges (S0 through S7). Not all of these ranges are allowed for each function (see Tables 6-2 and 6-3). This circuit can partially disable the Range Change Initiation Logic to prevent further upranging.

When a maximum range is sensed, pin 1 of U936A steps HI to prevent further upranging. The conditions which cause pin 1 of U936A to go HI are as follows:

1. In the S6 range when in the Ohms function (sets both inputs of U916B LO).

2. In the S5 range when in the Frequency function (sets both inputs of U916A LO).

3. In the S3 range when in Line or Peak or Threshold function (sets both inputs of U926B LO).

4. In the S4 range when in all functions except Frequency or Ohms (sets both inputs of U916C LO).

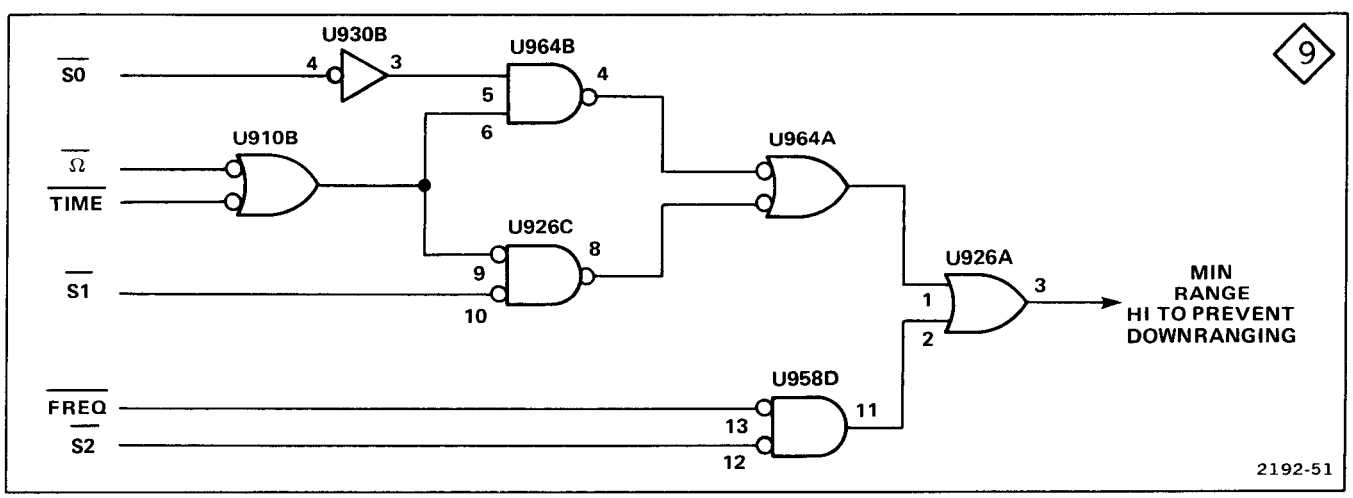

Fig. 6-50. Minimum Range Logic.

MANUAL MINIMUM TO MAXIMUM RANGE STEP LOGIC 9

This circuit consists of U950B, U932B, U932C, and U964C (see diagram 9). When operating in the manual ranging mode (S295 set to MNL), the Range Counter counts down each time the RANGE switch (S295) is pushed to DOWNRANGE and released. When the minimum allowable range is reached and the RANGE switch is pushed to DOWNRANGE, this circuit causes the range Counter to count up until the maximum allowable range is reached.

The circuit operates as follows:

1. Assume the present operating range is the minimum allowed for the function selected. Pin 9 of U950B is set HI by the minimum Range Logic.

2. Assume the RANGE switch (S295) is set to DOWNRANGE and released. This sets pin 11 of U950B HI. This clocks U950B causing the HI on pin 9 to pass to the Q output (pin 13).

3. The HI on pin 13 of U950B sets pin 5 of U932B HI which causes pin 4 of U932B and pin 8 of U932C to go LO. Pin 9 of U932C is always LO when the RANGE switch (S295) is not set to AUTO. Therefore pin 10 of U932C goes HI when pin 8 goes LO. Pin 10 of U932C sets pin 10 of U944 HI. Therefore the Range Counter will count up when clocked.

4. When pin 13 of U950B steps HI it also sets pin 8 of U964C HI. This allows the 100 Hz clock to pass to pin 15 of U944 through U964C and U954B. This clocks U944 at a 100 Hz rate. Since pin 10 of U944 is HI, the State Counter counts up.

5. The State Counter continues to uprange until the maximum allowable range for the function selected is reached. When the maximum range is reached, pin 1 of U936 in the maximum Range Logic steps HI setting pin 10 of U950B HI. This resets U950B causing pin 13 to go LO. The LO on pin 13 of U950B sets pin 8 of U964C LO. This prevents the 100 Hz clock from clocking U944. The LO on pin 13 of U950B also sets pin 10 of U944 LO through U932B and U932C. Therefore the Range Counter will count down when again clocked.

ILLEGAL STATES LOGIC 9

The Illegal States Logic consists of U936B and the circuitry controlling its inputs (see diagram 9).

There are eight possible operating ranges (S0 through S7). Not all of these ranges are allowed for each function. The Minimum Range Logic and Maximum Range Logic prevent downranging and upranging into an illegal range for the function selected. However, this is not sufficient to ensure an illegal state cannot be selected. Assume the instrument is in the Ohms function and the S6 range (S6 is the maximum range allowed in the Ohms function). Now assume you switch to the Frequency function. In Frequency S5 is the maximum allowable range. The Range Counter would remain in the S6 range if the Illegal States Logic didn't work. To prevent this, the output of U936B steps HI when an illegal state is sensed. This enables the preset input (pin 1 of U944). The levels present at pins 3, 4, 12, and 13 are impressed on the outputs of U944. As a result, the Range Counter is preset to the minimum allowable range for that function. Pins 13 and 3 of U944 are held at ground. The states of pins 4 and 12 of U944 depend on the function selected.

MASTER CLOCK AND CALIBRATOR

MASTER CLOCK 12

The Master Clock is shown on diagram 12.

The Master Clock oscillator is a crystal-controlled oscillator with a 100 MHz output. The oscillator consists of U1100B and Y1100. The oscillator output is buffered by U1100A.

CR1106, CR1108, Q1102, and Q1104 form a differential amplifier. This circuit performs two functions. It level-shifts the oscillator output from ECL to TTL levels. It also provides some waveshaping (causes the 100 MHz clock to more closely approximate a squarewave).

One of the outputs of the differential amplifier is applied to the frequency divider string through emitter follower Q1110. The frequency divider string divides the 100 MHz clock as needed to operate the various circuits in the 851.

The other output of the differential amplifier is supplied to the base of Q1142 in the Counter Source Selection Logic.

In a Time function, when in the S0 range and when the counter gate is HI, Q1130 is turned off. This allows the 100 MHz clock to pass directly to the Decade Counters through Q1142 (see Counter Source Selection Logic).

CALIBRATOR 12 14B

The Calibrator consists of the 5 kHz Gate and the Clamping Circuit (see diagrams 12 and 14B). Dependent on the signal from the 5 kHz Gate, the output of the Clamping Circuit alternates between +8 volts and −4 volts. In Peak functions, the output is +8 volts for two seconds then alternates between +8 and −4 volts (at a 5 kHz rate) for eight seconds. In other functions, the output alternates at a 5 kHz rate continuously. The output of the Clamping Circuit is connected to the CALIBRATOR output jack (J155).

5 kHz Gate

This circuit consists of U1122 and U854A (see diagram 12).

In Peak functions, pin 3 of U1122 is set LO. While pin 3 is LO, pin 11 will be LO for eight seconds and HI for two seconds. While pin 11 is LO, the 5 kHz clock passes through U854A to the Clamping Circuit. While pin 11 is HI, U854A blocks the 5 kHz clock (pin 1 of U854A goes LO).

In all functions except Peak, pin 3 of U1122 is set HI. This causes pin 11 to go LO. While pin 11 is LO, the 5 kHz clock passes through U854A to the Clamping Circuit.

Clamping Circuit

The Clamping Circuit consists of U1520, U1370 and associated circuitry (see diagram 14B).

The gated 5 kHz clock signal is applied to the input of the Clamping Circuit (R1540). The output of this circuit is +8 volts when the input is LO and −4 volts when the input is HI.

Input HI. When the gated 5 kHz signal is HI, pin 2 of U1520 tries to go positive through CR1520 and R1540. This causes the output of U1520 (pin 6) to move in a negative direction. When pin 6 goes sufficiently negative, an equilibrium is established. Pin 6 goes to −6.7 volts. This sets pin 2 of U1520 to 0 volts through VR1525, CR1524, and CR1520. Note that CR1526 is reverse biased.

When CR1526 is reverse biased, the Calibrator output voltage is determined by the divider action of R1537 and R1526. Pin 7 of U1370B is held at −4.14 volts and pin 2 of U1520 is held at 0 volts. Therefore, when the gated 5 kHz signal is HI, the Calibrator output is −4 volts.

Input LO. When the gated 5 kHz signal is LO, CR1520 is reverse biased and pin 2 of U1520 tries to go negative through R1522. This causes the output of U1520 to move in a positive direction. When the output goes sufficiently positive, an equilibrium is established. Pin 6 of U1520 goes to about +8.7 volts. This sets pin 2 of U1520 to 0 volts through the divider action of CR1526, R1526, and R1522. Due to the drop across CR1526, the Calibrator output voltage will be +8 volts.

There is about 0.01 mA flowing through VR1525 and R1525. This sets the anode of CR1524 to about +14.9 volts ensuring CR1524 is reverse biased.

POWER SUPPLY

CAUTION

The DMM supplies are floating. They are referenced to the DMM floating ground (the triangle symbol on the schematics). In the Ohms, AC Volts, or DC Volts functions, the voltage at the − probe appears at the floating ground. Therefore the voltage with respect to chassis ground on the DMM supplies will be the voltage on the − probe plus the rated voltage of the supply. Use care not to cross ground equipment as instrument damage and personal injury may occur.

PRIMARY CIRCUIT 14A

Input power is applied to line plug P1300. Filter FL1300 filters the input voltage to reduce the effect of electromagnetic interference during the operation of the 851.

The filtered input voltage is applied to the primary of power transformer T1300. The windings of T1300 are placed in parallel for operation from a 115 V ac source or in series for operation from a 230 volts source.

Transformer T1310 supplies a voltage to the DMM circuit for use in the LINE V setting of the FUNCTION switch. This voltage (at P1390) is one tenth the voltage applied to P1300.

SUPPLY REGULATORS

14 A 14 B 4 12

Except for the High Efficiency +5 Volt Supply, the individual supply regulators in the 851 operate in a similar manner. Therefore the individual supplies will not be described in detail. The following describes the operation of a basic positive voltage supply regulator. Negative voltage supply regulators operate in a similar manner.

Figure 6-51 shows a simplified diagram of a positive voltage supply regulator.

The non-inverting input of the operational amplifier (op amp) is connected to a stable reference voltage (point A). Some supplies use a voltage divider across a zener for the reference. Others use a ground or a voltage divider from another stable supply.

The inverting input of the op amp (point B) senses the regulator output voltage. This can be done by direct connection to the regulator or through a voltage divider. When the regulator output voltage is the correct value, it sets point B to the same voltage as point A.

Any change in the voltage at E is sensed at B. This causes the op amp to produce a correction voltage at point C. The correction voltage is opposite in polarity to the change at point E. The correction voltage at C can be directly connected to the pass transistor or connected through a zener. A zener is used to keep the output of the op amp near the center of its operating range. Some of the supplies use another transistor or FET to provide adequate current to drive the pass transistor.

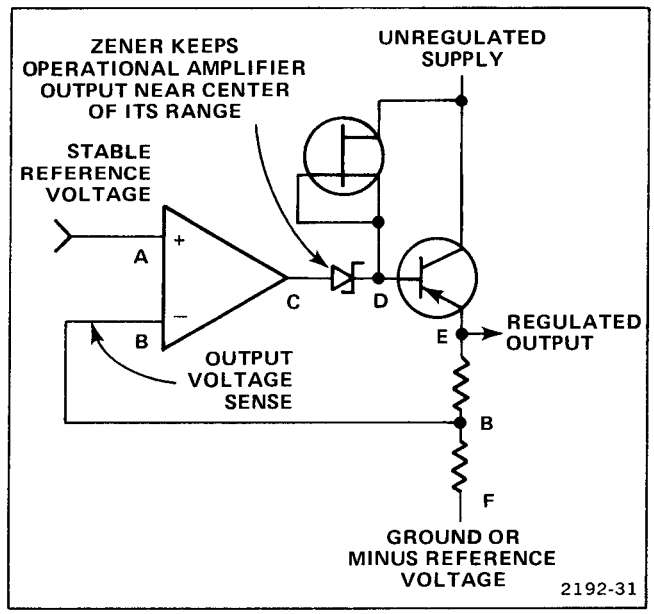

Fig. 6-51. Diagram of a positive voltage power supply regulator.

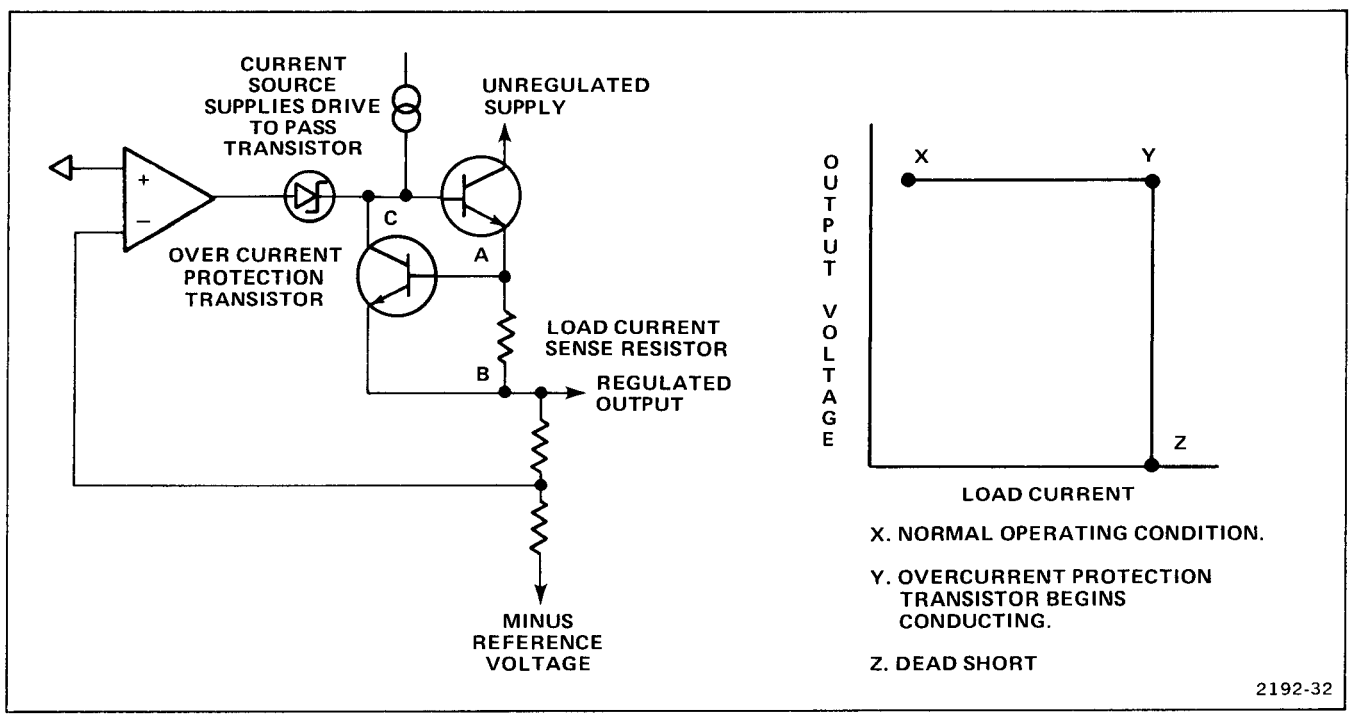

Fig. 6-52. Diagram of a positive voltage supply with current limiting.

OVERCURRENT PROTECTION 14A

Most of the supply regulators in the 851 have overcurrent protection. There are two types of protection circuits. One type limits the load current at some maximum value. The other type (Foldover Circuit) actually reduces load current as the load resistance decreases.

Current Limit

Figure 6-52 shows a diagram of a positive voltage supply with current limiting protection. The graph to the right of the circuitry shown in Fig. 6-53, shows the relationship of load current to load voltage. All of the current drawn by the load flows through the load current sense resistor. When the load current becomes excessive, the voltage it produces across the current sense resistor becomes adequate to turn on the overcurrent protection transistor (about 0.7 volt). This reduces the bias on the pass transistor which reduces the output voltage. As the load resistance continues to decrease, the output voltage decreases but the load current is limited at a value which keeps the voltage across the current sense resistor adequate to keep the current protection transistor turned on.

Current Foldover

Figure 6-53 shows a diagram of the −5 volt overcurrent protection circuit with graphs of circuit operation.

As the load resistance across the −5 volt supply decreases, the load current increases causing the voltage across R1377 to increase. This causes the voltage at points B, C, and D to go more negative. Eventually point D becomes sufficiently negative to turn on Q1372 which reduces the bias on Q1370 and Q1374. As a result, the voltages at all four points shown goes less negative.

The ratio of R1375 and R1376 remains constant. The ratio of the load resistance to R1377 decreases as the load resistance decreases. Therefore, as the load resistance decreases, point A goes less negative faster than point D. This turns on Q1372 harder as the load resistance decreases. As a result, the load voltage and load current both decrease as the load resistance decreases.

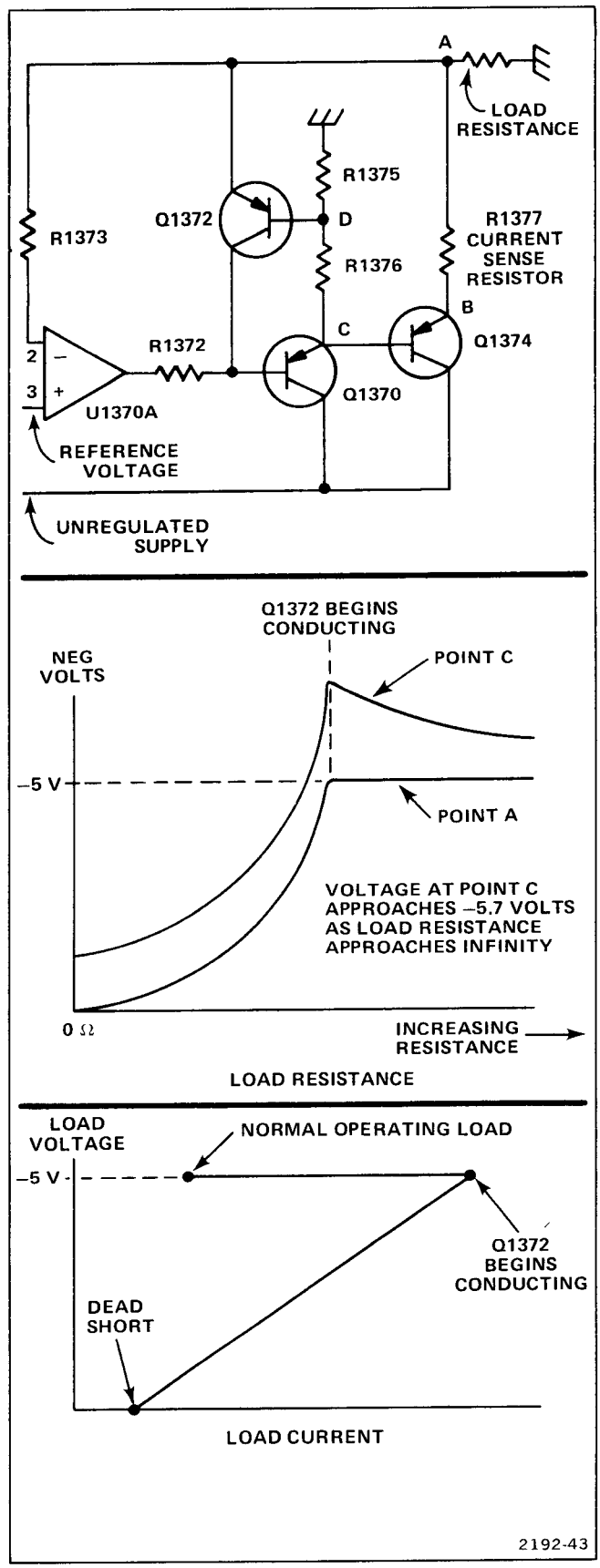

Fig. 6-53. Diagram of the −5 Volt Supply Overcurrent protection circuit.

HIGH EFFICIENCY +5 VOLT SUPPLY 14A

Figure 6-54 shows a simplified diagram of the High Efficiency +5 Volt Supply. This is a switching supply. Q1384 and Q1386 are the switching transistors. Q1380 and Q1382 control the switching transistors. Q1390 provides current limiting.

Regulation

Regulation in the High Efficiency +5 Volt Supply occurs as follows:

1. Assume point A (see Fig 6-54) is at +5 volts. This sets point B at +0.7 volt which holds on Q1380 through Q1382. When Q1380 turns on, the switching transistors turn off. At this time, the collapsing magnetic field of L1392 supplies the load current and charge current to C1392. CR1372 clamps point C at −0.7 volt and completes the current path while the switching transistors are off. If CR1372 was not in the circuit, point C would rapidly go very negative when Q1384 turns off.

2. As the magnetic field around L1392 continues to collapse, the voltage at point A starts to go less positive. As point A continues to go less positive, C1392 begins to supply some of the load current. The voltage at point B also goes less positive until it starts to turn off Q1382. The collector of Q1382 starts going more positive turning off Q1380. The resulting negative-going transition at the collector of Q1380 (point D) is supplied to the base of Q1382 through C1382. This speeds up the turnoff of Q1382 and Q1380, and provides necessary hysteresis for stable switching operation.

3. As the collector of Q1380 goes less positive, it turns on Q1384 and Q1386. Now Q1384 conducts current. This current builds the magnetic field around L1392 and charges C1392.

4. While Q1384 conducts, the voltage at A goes slightly more positive. Therefore the voltage at B also goes slightly more positive. When B goes positive enough to overcome the hysteresis, it starts to turn on Q1382 which turns on Q1380. The resulting positive-going transition at D speeds up the turn on of Q1382 through C1382.

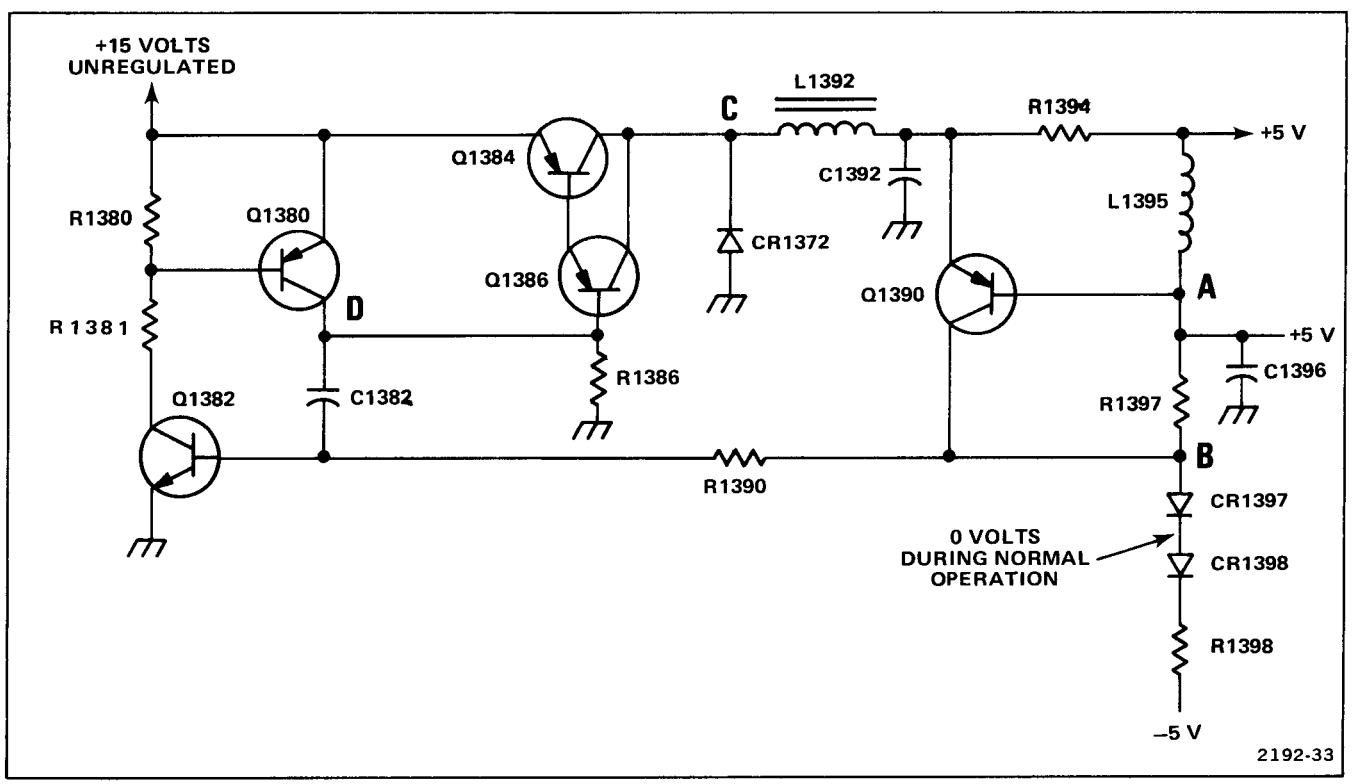

Fig. 6-54. Simplified diagram of the High-Effeciency +5 Volt Supply.

5. When Q1382 turns on it turns off Q1384 and Q1386. Now the original assumed condition is restored and the sequence of events just described repeats.

The feedback through R1390 controls the length of time a charge-discharge cycle to regulate the voltage at point A.

Current Limit

Q1390 provides current limiting for the High Efficiency +5 Volt Supply. The load current flows through R1394. When the load current becomes excessive, the voltage it produces across R1394 becomes sufficient to turn on Q1390. When Q1390 turns on, it turns on Q1382 and Q1380 turning off Q1384 and Q1386. This reduces the on time of Q1384 and Q1386. The less time Q1384 and Q1386 are on the less power is supplied to the load. As the load impedance decreases, beyond the point where current limiting starts, the output voltage decreases but the load current remains fairly constant. The value of this current is determined by the value of R1394 and the voltage needed to turn on Q1390.

SUPPLY REFERENCES 14 A

VR1362 provides the reference voltage for all the supplies except the DMM supplies. This reference can be by direct connection or through another supply which is referenced to VR1362. R1362 provides adjustment of the reference voltage.

VR1342 provides the reference voltage for the DMM supplies.

OPTIONS

OPTION 1: Temperature measurement capability added by including temperature probe.

Includes:

1 each Temperature Probe Tektronix part 010-6430-00.

REPLACEABLE ELECTRICAL PARTS

PARTS ORDERING INFORMATION

Replacement parts are available from or through your local Tektronix, Inc. Field Office or representative.

Changes to Tektronix instruments are sometimes made to accommodate improved components as they become available, and to give you the benefit of the latest circuit improvements developed in our engineering department. It is therefore important, when ordering parts, to include the following information in your order: Part number, instrument type or number, serial number, and modification number if applicable.

If a part you have ordered has been replaced with a new or improved part, your local Tektronix, Inc. Field Office or representative will contact you concerning any change in part number.

Change information, if any, is located at the rear of this manual.

SPECIAL NOTES AND SYMBOLS

X000	Part first added at this serial number
00X	Part removed after this serial number

ITEM NAME

In the Parts List, an Item Name is separated from the description by a colon (:). Because of space limitations, an Item Name may sometimes appear as incomplete. For further Item Name identification, the U.S. Federal Cataloging Handbook H6-1 can be utilized where possible.

ABBREVIATIONS

ACTR	ACTUATOR	PLSTC	PLASTIC
ASSY	ASSEMBLY	QTZ	QUARTZ
CAP	CAPACITOR	RECP	RECEPTACLE
CER	CERAMIC	RES	RESISTOR
CKT	CIRCUIT	RF	RADIO FREQUENCY
COMP	COMPOSITION	SEL	SELECTED
CONN	CONNECTOR	SEMICOND	SEMICONDUCTOR
ELCTLT	ELECTROLYTIC	SENS	SENSITIVE
ELEC	ELECTRICAL	VAR	VARIABLE
INCAND	INCANDESCENT	WW	WIREWOUND
LED	LIGHT EMITTING DIODE	XFMR	TRANSFORMER
NONWIR	NON WIREWOUND	XTAL	CRYSTAL

CROSS INDEX—MFR. CODE NUMBER TO MANUFACTURER

Mfr. Code	Manufacturer	Address	City, State, Zip
01002	GENERAL ELECTRIC COMPANY, INDUSTRIAL AND POWER CAPACITOR PRODUCTS DEPARTMENT	JOHN STREET	HUDSON FALLS, NY 12839
01121	ALLEN-BRADLEY COMPANY	1201 2ND STREET SOUTH	MILWAUKEE, WI 53204
01295	TEXAS INSTRUMENTS, INC., SEMICONDUCTOR GROUP	P O BOX 5012, 13500 N CENTRAL EXPRESSWAY	DALLAS, TX 75222
02111	SPECTROL ELECTRONICS CORPORATION	17070 EAST GALE AVENUE	CITY OF INDUSTRY, CA 91745
02735	RCA CORPORATION, SOLID STATE DIVISION	ROUTE 202	SOMERVILLE, NY 08876
02777	HOPKINS ENGINEERING COMPANY	12900 FOOTHILL BLVD.	SAN FERNANDO, CA 91342
03508	GENERAL ELECTRIC COMPANY, SEMI-CONDUCTOR PRODUCTS DEPARTMENT	ELECTRONICS PARK	SYRACUSE, NY 13201
03888	KDI PYROFILM CORPORATION	60 S JEFFERSON ROAD	WHIPPANY, NJ 07981
04222	AVX CERAMICS, DIVISION OF AVX CORP.	P O BOX 867, 19TH AVE. SOUTH	MYRTLE BEACH, SC 29577
04713	MOTOROLA, INC., SEMICONDUCTOR PROD. DIV.	5005 E MCDOWELL RD,PO BOX 20923	PHOENIX, AZ 85036
07263	FAIRCHILD SEMICONDUCTOR, A DIV. OF FAIRCHILD CAMERA AND INSTRUMENT CORP.	464 ELLIS STREET	MOUNTAIN VIEW, CA 94042
07716	TRW ELECTRONIC COMPONENTS, IRC FIXED RESISTORS, BURLINGTON DIV.	2850 MT. PLEASANT	BURLINGTON, IA 52601
09353	C AND K COMPONENTS, INC.	103 MORSE STREET	WATERTOWN, MA 02172
12617	HAMLIN, INC.	GROVE & LAKE STS.	LAKE MILLS, WI 53551
12697	CLAROSTAT MFG. CO., INC.	LOWER WASHINGTON STREET	DOVER, NH 03820
12954	SIEMENS CORPORATION, COMPONENTS GROUP	8700 E THOMAS RD, P O BOX 1390	SCOTTSDALE, AZ 85252
13571	ELECTRONIC RESEARCH CO.	P O BOX 913	SHAWNEE MISSION, KS 66201
14433	ITT SEMICONDUCTORS	3301 ELECTRONICS WAY P O BOX 3049	WEST PALM BEACH, FL 33402
14552	MICRO SEMICONDUCTOR CORP.	2830 E FAIRVIEW ST.	SANTA ANA, CA 92704
14752	ELECTRO CUBE INC.	1710 S. DEL MAR AVE.	SAN GABRIEL, CA 91776
17856	SILICONIX, INC.	2201 LAURELWOOD DRIVE	SANTA CLARA, CA 95054
18324	SIGNETICS CORP.	811 E. ARQUES	SUNNYVALE, CA 94086
19396	ILLINOIS TOOL WORKS, INC. PAKTRON DIV.	900 FOLLIN LANE, SE	VIENNA, VA 22180
21317	ELECTRONIC APPLICATIONS COMPANY	2213 EDWARDS AVENUE	SOUTH EL MONTE, CA 91733
24355	ANALOG DEVICES INC.	RT 1 INDUSTRIAL PK,P O BOX 280	NORWOOD, MA 02062
24546	CORNING GLASS WORKS, ELECTRONIC COMPONENTS DIVISION	550 HIGH STREET	BRADFORD, PA 16701
26769	NCI INC.	5900 AUSTRALIAN AVENUE	WEST PALM BEACH, FL 33407
27014	NATIONAL SEMICONDUCTOR CORP.	2900 SEMICONDUCTOR DR.	SANTA CLARA, CA 95051
31918	IEE/SCHADOW INC.	8081 WALLACE ROAD	EDEN PRAIRIE, MN 55343
32293	INTERSIL, INC.	10900 N. TANTAU AVE.	CUPERTINO, CA 95014
32997	BOURNS, INC., TRIMPOT PRODUCTS DIV.	1200 COLUMBIA AVE.	RIVERSIDE, CA 92507
50157	MIDWEST COMPONENTS INC.	P. O. BOX 787 1981 PORT CITY BLVD.	MUSKEGON, MI 49443
50434	HEWLETT-PACKARD COMPANY	640 PAGE MILL ROAD	PALO ALTO, CA 94304
50437	RELIANCE STEEL PRODUCTS COMPANY	3700 WALNUT STREET	MCKEESPORT, PA 15132
53184	XCITON CORPORATION	5 HEMLOCK STREET	LATHAM, NY 12110
56289	SPRAGUE ELECTRIC CO.	87 MARSHALL ST.	NORTH ADAMS, MA 01247
58361	GENERAL INSTRUMENT CORP. OPTO ELECTRONICS DIV.	3400 HILLVIEW AVE	PALO ALTO, CA 94304
59660	TUSONIX INC.	2155 N FORBES BLVD	TUCSON, AZ 85705
71400	BUSSMAN MFG., DIVISION OF MCGRAW-EDISON CO.	2536 W. UNIVERSITY ST.	ST. LOUIS, MO 63107
72982	ERIE TECHNOLOGICAL PRODUCTS, INC.	644 W. 12TH ST.	ERIE, PA 16512
73138	BECKMAN INSTRUMENTS, INC., HELIPOT DIV.	2500 HARBOR BLVD.	FULLERTON, CA 92634
75042	TRW ELECTRONIC COMPONENTS, IRC FIXED RESISTORS, PHILADELPHIA DIVISION	401 N. BROAD ST.	PHILADELPHIA, PA 19108
76493	BELL INDUSTRIES, INC., MILLER, J. W., DIV.	19070 REYES AVE., P O BOX 5825	COMPTON, CA 90224
78488	STACKPOLE CARBON CO.		ST. MARYS, PA 15857
80009	TEKTRONIX, INC.	P O BOX 500	BEAVERTON, OR 97077
80031	ELECTRA-MIDLAND CORP., MEPCO DIV.	22 COLUMBIA ROAD	MORRISTOWN, NJ 07960
82389	SWITCHCRAFT, INC.	5555 N. ELSTON AVE.	CHICAGO, IL 60630
84411	TRW ELECTRONIC COMPONENTS, TRW CAPACITORS	112 W. FIRST ST.	OGALLALA, NE 69153
90201	MALLORY CAPACITOR CO., DIV. OF P. R. MALLORY AND CO., INC.	3029 E. WASHINGTON STREET P. O. BOX 372	INDIANAPOLIS, IN 46206
91637	DALE ELECTRONICS, INC.	P. O. BOX 609	COLUMBUS, NE 68601
95118	WESCOIL COMPANY, INC.	16710 S PARK AVENUE	TIMELY PARK, IL 60477
95348	GORDOS CORPORATION	250 GLENWOOD AVENUE	BLOOMFIELD, NJ 07003

Ckt No.	Tektronix Part No.	Serial/Model No. Eff	Dscont	Name & Description	Mfr Code	Mfr Part Number
A1	670-4830-00	B010100	B020549	CKT BOARD ASSY:INPUT/OUTPUT	80009	670-4830-00
A1	670-4830-01	B020550	B022499	CKT BOARD ASSY:INPUT/OUTPUT	80009	670-4830-01
A1	670-4830-02	B022500	B036299	CKT BOARD ASSY:INPUT/OUTPUT	80009	670-4830-02
A1	670-4830-03	B036300		CKT BOARD ASSY:INPUT/OUTPUT	80009	670-4830-03
A4	670-4831-00	B010100	B020549	CKT BOARD ASSY:COMPARATOR	80009	670-4831-00
A4	670-4831-01	B020550		CKT BOARD ASSY:COMPARATOR	80009	670-4831-01
A7	670-4828-00	B010100	B020549	CKT BOARD ASSY:DMM	80009	670-4828-00
A7	670-4828-01	B020550	B033569	CKT BOARD ASSY:DMM	80009	670-4828-01
A7	670-4828-02	B033570		CKT BOARD ASSY:DMM	80009	670-4828-02
A8	670-5339-00	B010100	B020549X	CKT BOARD ASSY:ETCHED TRIGGER	80009	670-5339-00
A9	670-4829-00	B010100	B020549	CKT BOARD ASSY:COUNTER	80009	670-4829-00
A9	670-4829-01	B020550	B035249	CKT BOARD ASSY:COUNTER	80009	670-4829-01
A9	670-4829-02	B035250	B035239	CKT BOARD ASSY:COUNTER	80009	670-4829-02
A9	670-4829-03	B035240		CKT BOARD ASSY:COUNTER	80009	670-4829-03
A11	670-5030-00			CKT BOARD ASSY:SWITCH #1	80009	670-5030-00
A12	670-5252-00			CKT BOARD ASSY:SWITCH #3	80009	670-5252-00
A13	670-5031-00			CKT BOARD ASSY:SWITCH #4	80009	670-5031-00
A16	670-4827-00	B010100	B020549	CKT BOARD ASSY:POWER SUPPLY	80009	670-4827-00
A16	670-4827-01	B020550	B035389	CKT BOARD ASSY:POWER SUPPLY	80009	670-4827-01
A16	670-4827-02	B035390		CKT BOARD ASSY:POWER SUPPLY	80009	670-4827-02
A16	672-0657-01			CKT BOARD ASSY:INPUT/OUTPUT	80009	672-0657-01
A16	672-0657-02			CKT BOARD ASSY:INPUT/OUTPUT	80009	672-0657-02
C12	281-0205-00			CAP.,VAR,PLSTC:4-65PF,100V	80031	2810C5R565QJ02F0
C13	281-0592-00			CAP.,FXD,CER DI:4.7PF,+/-0.5PF,500V	59660	301-000-C0H0479D
C15	281-0772-00			CAP.,FXD,CER DI:0.0047UF,10%,100V	04222	GC701C472K
C16	283-0198-00			CAP.,FXD,CER DI:0.22UF,20%,50V	72982	8121N083Z5U0224M
C18	281-0773-00			CAP.,FXD,CER DI:0.01UF,10%,100V	04222	GC70-1C103K
C20	283-0059-00	B010100	B022499	CAP.,FXD,CER DI:1UF,+80-20%,25V	72982	8131N031Z5U0105Z
C20	283-0177-00	B022500		CAP.,FXD,CER DI:1UF,+80-20%,25V	56289	273C5
C21	281-0775-00			CAP.,FXD,CER DI:0.1UF,20%,50V	72982	8005D9AABZ5U104M
C27	281-0792-00	XB020550		CAP.,FXD,CER DI:82PF,10%,100V	72982	8035D2AADC0G820K
C30	281-0797-00			CAP.,FXD,CER DI:15PF,10%,100V	72982	8035D9AADC0G150K
C32	281-0219-00			CAP.,VAR,CER DI:5-35PF,+2-2.5%,100V	72982	513-001 5-30
C33	281-0797-00			CAP.,FXD,CER DI:15PF,10%,100V	72982	8035D9AADC0G150K
C34	290-0245-00			CAP.,FXD,ELCTLT:1.5UF,10%,10V	56289	150D155X9010A2
C35	281-0775-00			CAP.,FXD,CER DI:0.1UF,20%,50V	72982	8005D9AABZ5U104M
C41	281-0611-00			CAP.,FXD,CER DI:2.7PF,+/-0.25PF,200V	04222	7040-C0J-2R7C
C42	283-0198-00			CAP.,FXD,CER DI:0.22UF,20%,50V	72982	8121N083Z5U0224M
C43	281-0773-00			CAP.,FXD,CER DI:0.01UF,10%,100V	04222	GC70-1C103K
C44	290-0245-00			CAP.,FXD,ELCTLT:1.5UF,10%,10V	56289	150D155X9010A2
C45	281-0797-00			CAP.,FXD,CER DI:15PF,10%,100V	72982	8035D9AADC0G150K
C46	281-0219-00			CAP.,VAR,CER DI:5-35PF,+2-2.5%,100V	72982	513-001 5-30
C47	281-0797-00			CAP.,FXD,CER DI:15PF,10%,100V	72982	8035D9AADC0G150K
C48	281-0775-00			CAP.,FXD,CER DI:0.1UF,20%,50V	72982	8005D9AABZ5U104M
C51	283-0059-00	B010100	B022499	CAP.,FXD,CER DI:1UF,+80-20%,25V	72982	8131N031Z5U0105Z
C51	283-0177-00	B022500		CAP.,FXD,CER DI:1UF,+80-20%,25V	56289	273C5
C52	281-0775-00			CAP.,FXD,CER DI:0.1UF,20%,50V	72982	8005D9AABZ5U104M
C58	281-0792-00			CAP.,FXD,CER DI:82PF,10%,100V	72982	8035D2AADC0G820K
C62	281-0205-00			CAP.,VAR,PLSTC:4-65PF,100V	80031	2810C5R565QJ02F0
C63	281-0797-00			CAP.,FXD,CER DI:15PF,10%,100V	72982	8035D9AADC0G150K
C65	281-0772-00			CAP.,FXD,CER DI:0.0047UF,10%,100V	04222	GC701C472K
C66	281-0611-00			CAP.,FXD,CER DI:2.7PF,+/-0.25PF,200V	04222	7040-C0J-2R7C
C67	283-0198-00			CAP.,FXD,CER DI:0.22UF,20%,50V	72982	8121N083Z5U0224M
C68	281-0773-00			CAP.,FXD,CER DI:0.01UF,10%,100V	04222	GC70-1C103K
C80	283-0059-00	B010100	B022499	CAP.,FXD,CER DI:1UF,+80-20%,25V	72982	8131N031Z5U0105Z
C80	283-0177-00	B022500		CAP.,FXD,CER DI:1UF,+80-20%,25V	56289	273C5
C81	281-0775-00			CAP.,FXD,CER DI:0.1UF,20%,50V	72982	8005D9AABZ5U104M

Ckt No.	Tektronix Part No.	Serial/Model No. Eff	Dscont	Name & Description	Mfr Code	Mfr Part Number
C87	281-0792-00			CAP.,FXD,CER DI:82PF,10%,100V	72982	8035D2AADC0G820K
C90	281-0797-00			CAP.,FXD,CER DI:15PF,10%,100V	72982	8035D9AADC0G150K
C93	281-0797-00			CAP.,FXD,CER DI:15PF,10%,100V	72982	8035D9AADC0G150K
C94	290-0245-00			CAP.,FXD,ELCTLT:1.5UF,10%,10V	56289	150D155X9010A2
C95	281-0775-00			CAP.,FXD,CER DI:0.1UF,20%,50V	72982	8005D9AABZ5U104M
C100	283-0059-00	B010100	B022499	CAP.,FXD,CER DI:1UF,+80-20%,25V	72982	8131N031Z5U0105Z
C100	283-0177-00	B022500		CAP.,FXD,CER DI:1UF,+80-20%,25V	56289	273C5
C101	281-0775-00			CAP.,FXD,CER DI:0.1UF,20%,50V	72982	8005D9AABZ5U104M
C102	283-0198-00			CAP.,FXD,CER DI:0.22UF,20%,50V	72982	8121N083Z5U0224M
C103	281-0773-00			CAP.,FXD,CER DI:0.01UF,10%,100V	04222	GC70-1C103K
C107	281-0792-00			CAP.,FXD,CER DI:82PF,10%,100V	72982	8035D2AADC0G820K
C112	281-0205-00			CAP.,VAR,PLSTC:4-65PF,100V	80031	2810C5R565QJ02F0
C113	281-0797-00			CAP.,FXD,CER DI:15PF,10%,100V	72982	8035D9AADC0G150K
C115	281-0772-00			CAP.,FXD,CER DI:0.0047UF,10%,100V	04222	GC701C472K
C116	281-0611-00			CAP.,FXD,CER DI:2.7PF,+/-0.25PF,200V	04222	7040-C0J-2R7C
C120	281-0797-00			CAP.,FXD,CER DI:15PF,10%,100V	72982	8035D9AADC0G150K
C123	281-0797-00			CAP.,FXD,CER DI:15PF,10%,100V	72982	8035D9AADC0G150K
C124	290-0245-00			CAP.,FXD,ELCTLT:1.5UF,10%,10V	56289	150D155X9010A2
C125	281-0775-00			CAP.,FXD,CER DI:0.1UF,20%,50V	72982	8005D9AABZ5U104M
C130	281-0504-00	B010100	B020549	CAP.,FXD,CER DI:10PF,+/-1PF,500V	59660	301-055C0G0100F
C130	281-0811-00	B020550		CAP.,FXD,CER DI:10PF,10%,100V	72982	8035D2AADC1G100K
C131	281-0549-00	B010100	B020549	CAP.,FXD,CER DI:68PF,10%,500V	59660	301-000U2J0680K
C131	281-0762-00	B020550		CAP.,FXD,CER DI:27PF,20%,100V	72982	8035D9AADC0G270M
C132	281-0775-00			CAP.,FXD,CER DI:0.1UF,20%,50V	72982	8005D9AABZ5U104M
C134	281-0504-00	B010100	B020549	CAP.,FXD,CER DI:10PF,+/-1PF,500V	59660	301-055C0G0100F
C134	281-0811-00	B020550		CAP.,FXD,CER DI:10PF,10%,100V	72982	8035D2AADC1G100K
C135	281-0549-00	B010100	B020549	CAP.,FXD,CER DI:68PF,10%,500V	59660	301-000U2J0680K
C135	281-0762-00	B020550		CAP.,FXD,CER DI:27PF,20%,100V	72982	8035D9AADC0G270M
C136	281-0775-00			CAP.,FXD,CER DI:0.1UF,20%,50V	72982	8005D9AABZ5U104M
C138	290-0263-00			CAP.,FXD,ELCTLT:2.7UF,15V	56289	162D275X9015CD2
C140	281-0504-00	B010100	B020549	CAP.,FXD,CER DI:10PF,+/-1PF,500V	59660	301-055C0G0100F
C140	281-0811-00	B020550		CAP.,FXD,CER DI:10PF,10%,100V	72982	8035D2AADC1G100K
C141	281-0549-00	B010100	B020549	CAP.,FXD,CER DI:68PF,10%,500V	59660	301-000U2J0680K
C141	281-0762-00	B020550		CAP.,FXD,CER DI:27PF,20%,100V	72982	8035D9AADC0G270M
C142	281-0775-00			CAP.,FXD,CER DI:0.1UF,20%,50V	72982	8005D9AABZ5U104M
C144	281-0504-00	B010100	B020549	CAP.,FXD,CER DI:10PF,+/-1PF,500V	59660	301-055C0G0100F
C144	281-0811-00	B020550		CAP.,FXD,CER DI:10PF,10%,100V	72982	8035D2AADC1G100K
C145	281-0549-00	B010100	B020549	CAP.,FXD,CER DI:68PF,10%,500V	59660	301-000U2J0680K
C145	281-0762-00	B020550		CAP.,FXD,CER DI:27PF,20%,100V	72982	8035D9AADC0G270M
C146	281-0775-00			CAP.,FXD,CER DI:0.1UF,20%,50V	72982	8005D9AABZ5U104M
C152	290-0534-00			CAP.,FXD,ELCTLT:1UF,20%,35V	56289	196D105X0035HA1
C153	290-0536-00			CAP.,FXD,ELCTLT:10UF,20%,25V	90201	TDC106M025FL
C154	290-0527-00			CAP.,FXD,ELCTLT:15UF,20%,20V	90201	TDC156M020FL
C155	290-0245-00			CAP.,FXD,ELCTLT:1.5UF,10%,10V	56289	150D155X9010A2
C157	290-0245-00			CAP.,FXD,ELCTLT:1.5UF,10%,10V	56289	150D155X9010A2
C159	290-0719-00			CAP.,FXD,ELCTLT:47UF,20%,25V	56289	196D476X0025TE3
C180	285-1065-00			CAP.,FXD,PLSTC:0.01UF,20%,600V	14752	230B1F103
C181	281-0672-00	B010100	B020549	CAP.,FXD,CER DI:11.4PF,1%,500V	59660	374 017C0G01149F
C181	281-0634-00	B020550		CAP.,FXD,CER DI:10PF,+/-0.25PF,500V	59660	374 011 C0G0100C
C182	281-0178-00			CAP.,VAR,PLSTC:1-3.5PF,500V	80031	2805D013R5BH02F0
C183	281-0814-00	B010100	B034424	CAP.,FXD,CER DI:100PF,10%,100V	04222	GC70-1-A101K
C183	281-0814-01	B034425		CAP.,FXD,CER,DI:100PF,5%,100V	04222	GA101A101JAA
C184	281-0601-00			CAP.,FXD,CER DI:7.5PF,500V	59660	301-000C0H0759D
C185	281-0178-00			CAP.,VAR,PLSTC:1-3.5PF,500V	80031	2805D013R5BH02F0
C186	283-0359-00	B010100	B034424	CAP.,FXD,CER DI:1000PF,10%,200V	72982	8131N203C0G0102K
C186	283-0359-01	B034425		CAP.,FXD,CER DI:1000PF,10%,200V	72982	8131N203C0G0102J
C190	285-1106-00			CAP.,FXD,PLSTC:0.022UF,20%,600V	14752	230B1F223

Ckt No.	Tektronix Part No.	Serial/Model No. Eff	Dscont	Name & Description	Mfr Code	Mfr Part Number
C191	281-0658-00			CAP.,FXD,CER DI:6.2PF,+/-0.25PF,500V	59660	301-000C0H0629C
C192	281-0178-00			CAP.,VAR,PLSTC:1-3.5PF,500V	80031	2805D013R5BH02F0
C193	285-0598-00			CAP.,FXD,PLSTC:0.01UF,5%,100V	01002	61F10AC103
C198	283-0183-00	B010100	B022499	CAP.,FXD,CER DI:0.045UF,20%,500V	56289	275C10
C198	285-1170-00	B022500		CAP.,FXD,PLSTC:0.047UF,10%,600V	14752	230B1F473K
C199	283-0183-00	B010100	B022499	CAP.,FXD,CER DI:0.045UF,20%,500V	56289	275C10
C199	285-1170-00	B022500		CAP.,FXD,PLSTC:0.047UF,10%,600V	14752	230B1F473K
C200	285-1100-00			CAP.,FXD,PLSTC:0.022UF,5%,200V	19396	223J02PT485
C208	290-0572-00			CAP.,FXD,ELCTLT:0.1UF,20%,50V	56289	196D104X0050HA1
C220	283-0080-00			CAP.,FXD,CER DI:0.022UF,+80-20%,25V	56289	19C611
C221	283-0080-00			CAP.,FXD,CER DI:0.022UF,+80-20%,25V	56289	19C611
C225	283-0080-00			CAP.,FXD,CER DI:0.022UF,+80-20%,25V	56289	19C611
C226	283-0080-00			CAP.,FXD,CER DI:0.022UF,+80-20%,25V	56289	19C611
C228	283-0080-00			CAP.,FXD,CER DI:0.022UF,+80-20%,25V	56289	19C611
C252	281-0773-00			CAP.,FXD,CER DI:0.01UF,10%,100V	04222	GC70-1C103K
C257	281-0773-00			CAP.,FXD,CER DI:0.01UF,10%,100V	04222	GC70-1C103K
C261	281-0788-00			CAP.,FXD,CER DI:470PF,10%,100V	72982	8005H9AADW5R471K
C288	283-0212-00			CAP.,FXD,CER DI:2UF,20%,50V	72982	8141N064Z5U205M
C289	290-0519-00			CAP.,FXD,ELCTLT:100UF,20%,20V	90201	TDC107M020WLD
C290	281-0775-00			CAP.,FXD,CER DI:0.1UF,20%,50V	72982	8005D9AABZ5U104M
C291	281-0775-00			CAP.,FXD,CER DI:0.1UF,20%,50V	72982	8005D9AABZ5U104M
C292	281-0775-00			CAP.,FXD,CER DI:0.1UF,20%,50V	72982	8005D9AABZ5U104M
C293	281-0775-00			CAP.,FXD,CER DI:0.1UF,20%,50V	72982	8005D9AABZ5U104M
C294	283-0006-00			CAP.,FXD,CER DI:0.02UF,+80-20%,500V	72982	0841545Z5V00203Z
C299	281-0788-00			CAP.,FXD,CER DI:470PF,10%,100V	72982	8005H9AADW5R471K
C340	281-0773-00			CAP.,FXD,CER DI:0.01UF,10%,100V	04222	GC70-1C103K
C341	281-0792-00			CAP.,FXD,CER DI:82PF,10%,100V	72982	8035D2AADC0G820K
C347	281-0792-00			CAP.,FXD,CER DI:82PF,10%,100V	72982	8035D2AADC0G820K
C349	281-0773-00			CAP.,FXD,CER DI:0.01UF,10%,100V	04222	GC70-1C103K
C350	281-0772-00			CAP.,FXD,CER DI:0.0047UF,10%,100V	04222	GC701C472K
C351	281-0792-00			CAP.,FXD,CER DI:82PF,10%,100V	72982	8035D2AADC0G820K
C358	281-0504-00	XB033570		CAP.,FXD,CER DI:10PF,+/-1PF,500V	59660	301-055C0G0100F
C386	290-0308-00			CAP.,FXD,ELCTLT:1UF,20%,35V	26769	TEK1778-0308-00
C391	290-0263-00			CAP.,FXD,ELCTLT:2.7UF,15V	56289	162D275X9015CD2
C392	281-0557-00			CAP.,FXD,CER DI:1.8PF,10%,500V	04222	7001-1324
C393	290-0723-00			CAP.,FXD,ELCTLT:150UF,20%,6V	56289	196D157X0006PE3
C398	285-1102-00			CAP.,FXD,PLSTC:0.1UF,20%,100V	19396	PT720B104M
C411	285-1100-00	B010100	B020549	CAP.,FXD,PLSTC:0.022UF,5%,200V	19396	223J02PT485
C411	285-1104-00	B020550		CAP.,FXD,PLSTC:0.033UF,5%,200V	19396	333J02PP580
C412	285-1100-00	B010100	B020549	CAP.,FXD,PLSTC:0.022UF,5%,200V	19396	223J02PT485
C412	285-1104-00	B020550		CAP.,FXD,PLSTC:0.033UF,5%,200V	19396	333J02PP580
C422	285-1096-00			CAP.,FXD,PLSTC:1UF,10%,50V	14752	230B1B105K
C430	285-1096-00			CAP.,FXD,PLSTC:1UF,10%,50V	14752	230B1B105K
C431	285-1122-00			CAP.,FXD,PLSTC:0.25UF,10%,120V	84411	TEK156-2549120A
C434	281-0791-00			CAP.,FXD,CER DI:270PF,10%,100V	72982	8035D2AADX5R271K
C436	290-0301-00	B010100	B020549	CAP.,FXD,ELCTLT:10UF,10%,20V	56289	150D106X9020B2
C436	290-0721-00	B020550		CAP.,FXD,ELCTLT:100UF,20%,20V	56289	196D107X0020TE3
C437	281-0786-00			CAP.,FXD,CER DI:150PF,10%,100V	72982	8035D2AADX5P151K
C442	281-0775-00	XB020550		CAP.,FXD,CER DI:0.1UF,20%,50V	72982	8005D9AABZ5U104M
C444	281-0775-00	XB020550		CAP.,FXD,CER DI:0.1UF,20%,50V	72982	8005D9AABZ5U104M
C445	281-0775-00	XB020550		CAP.,FXD,CER DI:0.1UF,20%,50V	72982	8005D9AABZ5U104M
C451	281-0792-00			CAP.,FXD,CER DI:82PF,10%,100V	72982	8035D2AADC0G820K
C453	281-0792-00			CAP.,FXD,CER DI:82PF,10%,100V	72982	8035D2AADC0G820K
C454	281-0788-00			CAP.,FXD,CER DI:470PF,10%,100V	72982	8005H9AADW5R471K
C456	281-0792-00			CAP.,FXD,CER DI:82PF,10%,100V	72982	8035D2AADC0G820K
C457	281-0792-00			CAP.,FXD,CER DI:82PF,10%,100V	72982	8035D2AADC0G820K
C474	281-0773-00			CAP.,FXD,CER DI:0.01UF,10%,100V	04222	GC70-1C103K

Ckt No.	Tektronix Part No.	Serial/Model No. Eff	Dscont	Name & Description	Mfr Code	Mfr Part Number
C484	281-0773-00			CAP.,FXD,CER DI:0.01UF,10%,100V	04222	GC70-1C103K
C489	281-0766-00			CAP.,FXD,CER DI:100PF,20%,200V	04222	GC106C101M
C491	281-0775-00			CAP.,FXD,CER DI:0.1UF,20%,50V	72982	8005D9AABZ5U104M
C492	281-0775-00	B010100	B022974	CAP.,FXD,CER DI:0.1UF,20%,50V	72982	8005D9AABZ5U104M
C492	290-0136-00	B022975		CAP.,FXD,ELCTLT:2.2UF,20%,20V	56289	162D225X0020CD2
C510	281-0775-00			CAP.,FXD,CER DI:0.1UF,20%,50V	72982	8005D9AABZ5U104M
C541	281-0540-00			CAP.,FXD,CER DI:51PF,5%,500V	59660	301-000U2J0510J
C542	281-0540-00			CAP.,FXD,CER DI:51PF,5%,500V	59660	301-000U2J0510J
C543	281-0775-00			CAP.,FXD,CER DI:0.1UF,20%,50V	72982	8005D9AABZ5U104M
C544	281-0523-00	B010100	B020549	CAP.,FXD,CER DI:100PF,+/-20PF,500V	72982	301-000U2M0101M
C544	281-0814-00	B020550		CAP.,FXD,CER DI:100PF,10%,100V	04222	GC70-1-A101K
C545	281-0205-00			CAP.,VAR,PLSTC:4-65PF,100V	80031	2810C5R565QJ02F0
C546	281-0205-00			CAP.,VAR,PLSTC:4-65PF,100V	80031	2810C5R565QJ02F0
C547	281-0775-00			CAP.,FXD,CER DI:0.1UF,20%,50V	72982	8005D9AABZ5U104M
C550	281-0523-00	B010100	B020549	CAP.,FXD,CER DI:100PF,+/-20PF,500V	72982	301-000U2M0101M
C550	281-0814-00	B020550		CAP.,FXD,CER DI:100PF,10%,100V	04222	GC70-1-A101K
C551	281-0205-00			CAP.,VAR,PLSTC:4-65PF,100V	80031	2810C5R565QJ02F0
C552	281-0205-00			CAP.,VAR,PLSTC:4-65PF,100V	80031	2810C5R565QJ02F0
C553	281-0775-00			CAP.,FXD,CER DI:0.1UF,20%,50V	72982	8005D9AABZ5U104M
C554	281-0523-00	B010100	B020549	CAP.,FXD,CER DI:100PF,+/-20PF,500V	72982	301-000U2M0101M
C554	281-0814-00	B020550		CAP.,FXD,CER DI:100PF,10%,100V	04222	GC70-1-A101K
C555	281-0205-00			CAP.,VAR,PLSTC:4-65PF,100V	80031	2810C5R565QJ02F0
C556	281-0205-00			CAP.,VAR,PLSTC:4-65PF,100V	80031	2810C5R565QJ02F0
C570	281-0775-00			CAP.,FXD,CER DI:0.1UF,20%,50V	72982	8005D9AABZ5U104M
C581	283-0198-00			CAP.,FXD,CER DI:0.22UF,20%,50V	72982	8121N083Z5U0224M
C582	283-0198-00			CAP.,FXD,CER DI:0.22UF,20%,50V	72982	8121N083Z5U0224M
C583	283-0198-00			CAP.,FXD,CER DI:0.22UF,20%,50V	72982	8121N083Z5U0224M
C584	283-0198-00			CAP.,FXD,CER DI:0.22UF,20%,50V	72982	8121N083Z5U0224M
C586	283-0198-00			CAP.,FXD,CER DI:0.22UF,20%,50V	72982	8121N083Z5U0224M
C587	283-0198-00			CAP.,FXD,CER DI:0.22UF,20%,50V	72982	8121N083Z5U0224M
C588	281-0775-00			CAP.,FXD,CER DI:0.1UF,20%,50V	72982	8005D9AABZ5U104M
C599	283-0198-00			CAP.,FXD,CER DI:0.22UF,20%,50V	72982	8121N083Z5U0224M
C600	281-0775-00			CAP.,FXD,CER DI:0.1UF,20%,50V	72982	8005D9AABZ5U104M
C615	281-0775-00			CAP.,FXD,CER DI:0.1UF,20%,50V	72982	8005D9AABZ5U104M
C630	281-0775-00			CAP.,FXD,CER DI:0.1UF,20%,50V	72982	8005D9AABZ5U104M
C633	283-0005-00			CAP.,FXD,CER DI:0.01UF,+100-0%,250V	72982	8131N300Z5U0103P
C635	281-0775-00			CAP.,FXD,CER DI:0.1UF,20%,50V	72982	8005D9AABZ5U104M
C651	281-0093-00	B010100	B020549	CAP.,VAR,CER DI:5.5-18PF	72982	538-011A5.5-18
C651	281-0123-00	B020550		CAP.,VAR,CER DI:5-25PF,100V	72982	518-000A5-25
C657	290-0297-00			CAP.,FXD,ELCTLT:39UF,10%,10V	56289	150D396X9010B2
C670	281-0775-00			CAP.,FXD,CER DI:0.1UF,20%,50V	72982	8005D9AABZ5U104M
C671	281-0772-00	B010100	B020549	CAP.,FXD,CER DI:0.0047UF,10%,100V	04222	GC701C472K
C671	283-0110-00	B020550		CAP.,FXD,CER DI:0.005UF,+80-20%,150V	56289	19C242B
C674	281-0772-00	B010100	B020549	CAP.,FXD,CER DI:0.0047UF,10%,100V	04222	GC701C472K
C674	283-0110-00	B020550		CAP.,FXD,CER DI:0.005UF,+80-20%,150V	56289	19C242B
C702	281-0772-00			CAP.,FXD,CER DI:0.0047UF,10%,100V	04222	GC701C472K
C706	290-0536-00			CAP.,FXD,ELCTLT:10UF,20%,25V	90201	TDC106M025FL
C708	283-0005-00			CAP.,FXD,CER DI:0.01UF,+100-0%,250V	72982	8131N300Z5U0103P
C714	290-0512-00	B010100	B020549	CAP.,FXD,ELCTLT:22UF,20%,15V	56289	196D226X0015KA1
C714	290-0530-00	B020550		CAP.,FXD,ELCTLT:68UF,20%,6V	90201	TDC686M006NLF
C715	290-0512-00	B010100	B020549	CAP.,FXD,ELCTLT:22UF,20%,15V	56289	196D226X0015KA1
C715	290-0530-00	B020550		CAP.,FXD,ELCTLT:68UF,20%,6V	90201	TDC686M006NLF
C722	281-0772-00			CAP.,FXD,CER DI:0.0047UF,10%,100V	04222	GC701C472K
C726	290-0536-00			CAP.,FXD,ELCTLT:10UF,20%,25V	90201	TDC106M025FL
C728	283-0005-00			CAP.,FXD,CER DI:0.01UF,+100-0%,250V	72982	8131N300Z5U0103P
C734	290-0512-00	B010100	B020549	CAP.,FXD,ELCTLT:22UF,20%,15V	56289	196D226X0015KA1
C734	290-0530-00	B020550		CAP.,FXD,ELCTLT:68UF,20%,6V	90201	TDC686M006NLF

Ckt No.	Tektronix Part No.	Serial/Model No. Eff	Dscont	Name & Description	Mfr Code	Mfr Part Number
C735	290-0512-00	B010100	B020549	CAP.,FXD,ELCTLT:22UF,20%,15V	56289	196D226X0015KA1
C735	290-0530-00	B020550		CAP.,FXD,ELCTLT:68UF,20%,6V	90201	TDC686M006NLF
C781	281-0775-00			CAP.,FXD,CER DI:0.1UF,20%,50V	72982	8005D9AABZ5U104M
C782	281-0775-00			CAP.,FXD,CER DI:0.1UF,20%,50V	72982	8005D9AABZ5U104M
C783	281-0775-00			CAP.,FXD,CER DI:0.1UF,20%,50V	72982	8005D9AABZ5U104M
C784	281-0775-00			CAP.,FXD,CER DI:0.1UF,20%,50V	72982	8005D9AABZ5U104M
C785	281-0775-00			CAP.,FXD,CER DI:0.1UF,20%,50V	72982	8005D9AABZ5U104M
C786	281-0775-00			CAP.,FXD,CER DI:0.1UF,20%,50V	72982	8005D9AABZ5U104M
C791	290-0522-00			CAP.,FXD,ELCTLT:1UF,20%,50V	56289	196D105X0050HA1
C794	290-0522-00			CAP.,FXD,ELCTLT:1UF,20%,50V	56289	196D105X0050HA1
C802	281-0797-00			CAP.,FXD,CER DI:15PF,10%,100V	72982	8035D9AADC0G150K
C804	281-0775-00			CAP.,FXD,CER DI:0.1UF,20%,50V	72982	8005D9AABZ5U104M
C806	281-0775-00			CAP.,FXD,CER DI:0.1UF,20%,50V	72982	8005D9AABZ5U104M
C812	281-0773-00	B010100	B010389	CAP.,FXD,CER DI:0.01UF,10%,100V	04222	GC70-1C103K
C812	281-0775-00	B010390		CAP.,FXD,CER DI:0.1UF,20%,50V	72982	8005D9AABZ5U104M
C814	290-0722-00			CAP.,FXD,ELCTLT:100UF,20%,10V	56289	196D107X0010PE3
C818	281-0775-00			CAP.,FXD,CER DI:0.1UF,20%,50V	72982	8005D9AABZ5U104M
C819	281-0773-00			CAP.,FXD,CER DI:0.01UF,10%,100V	04222	GC70-1C103K
C820	290-0534-00			CAP.,FXD,ELCTLT:1UF,20%,35V	56289	196D105X0035HA1
C824	281-0773-00			CAP.,FXD,CER DI:0.01UF,10%,100V	04222	GC70-1C103K
C826	281-0775-00			CAP.,FXD,CER DI:0.1UF,20%,50V	72982	8005D9AABZ5U104M
C840	281-0775-00			CAP.,FXD,CER DI:0.1UF,20%,50V	72982	8005D9AABZ5U104M
C854	281-0788-00			CAP.,FXD,CER DI:470PF,10%,100V	72982	8005H9AADW5R471K
C858	281-0786-00			CAP.,FXD,CER DI:150PF,10%,100V	72982	8035D2AADX5P151K
C920	281-0788-00			CAP.,FXD,CER DI:470PF,10%,100V	72982	8005H9AADW5R471K
C932	281-0775-00			CAP.,FXD,CER DI:0.1UF,20%,50V	72982	8005D9AABZ5U104M
C934	283-0177-00	XB035250		CAP.,FXD,CER DI:1UF,+80-20%,25V	56289	273C5
C940	281-0797-00			CAP.,FXD,CER DI:15PF,10%,100V	72982	8035D9AADC0G150K
C945	281-0797-00	B010100	B020549	CAP.,FXD,CER DI:15PF,10%,100V	72982	8035D9AADC0G150K
C945	281-0759-00	B020550		CAP.,FXD,CER DI:22PF,10%,100V	72982	8035D9AADC1G220K
C958	281-0775-00			CAP.,FXD,CER DI:0.1UF,20%,50V	72982	8005D9AABZ5U104M
C990	281-0775-00			CAP.,FXD,CER DI:0.1UF,20%,50V	72982	8005D9AABZ5U104M
C1100	281-0204-00			CAP.,VAR,PLSTC:2-22PF,100V	80031	287C00222MJ02
C1102	281-0775-00			CAP.,FXD,CER DI:0.1UF,20%,50V	72982	8005D9AABZ5U104M
C1104	281-0775-00			CAP.,FXD,CER DI:0.1UF,20%,50V	72982	8005D9AABZ5U104M
C1110	281-0775-00			CAP.,FXD,CER DI:0.1UF,20%,50V	72982	8005D9AABZ5U104M
C1122	281-0775-00			CAP.,FXD,CER DI:0.1UF,20%,50V	72982	8005D9AABZ5U104M
C1127	281-0788-00			CAP.,FXD,CER DI:470PF,10%,100V	72982	8005H9AADW5R471K
C1141	281-0812-00			CAP.,FXD,CER DI:1000PF,10%,100V	72982	8035D9AADX7R102K
C1142	281-0812-00			CAP.,FXD,CER DI:1000PF,10%,100V	72982	8035D9AADX7R102K
C1148	281-0812-00			CAP.,FXD,CER DI:1000PF,10%,100V	72982	8035D9AADX7R102K
C1200	290-0512-00			CAP.,FXD,ELCTLT:22UF,20%,15V	56289	196D226X0015KA1
C1201	290-0522-00			CAP.,FXD,ELCTLT:1UF,20%,50V	56289	196D105X0050HA1
C1221	290-0522-00			CAP.,FXD,ELCTLT:1UF,20%,50V	56289	196D105X0050HA1
C1299	283-0198-00			CAP.,FXD,CER DI:0.22UF,20%,50V	72982	8121N083Z5U0224M
C1311	290-0801-00			CAP.,FXD,ELCTLT:1000UF,+75-10%,35V	56289	D76291
C1314	290-0801-00			CAP.,FXD,ELCTLT:1000UF,+75-10%,35V	56289	D76291
C1323	290-0177-00			CAP.,FXD,ELCTLT:1UF,20%,50V	56289	162D105X0050CD2
C1329	290-0745-00			CAP.,FXD,ELCTLT:22UF,+50-10%,25V	56289	502D225
C1334	290-0177-00			CAP.,FXD,ELCTLT:1UF,20%,50V	56289	162D105X0050CD2
C1339	290-0771-00			CAP.,FXD,ELCTLT:220UF,+50-10%,10VDC	56289	502D231
C1341	290-0530-00			CAP.,FXD,ELCTLT:68UF,20%,6V	90201	TDC686M006NLF
C1349	290-0745-00			CAP.,FXD,ELCTLT:22UF,+50-10%,25V	56289	502D225
C1351	290-0633-00			CAP.,FXD,ELCTLT:2400UF,+75-10%,30V	56289	39D360
C1353	290-0177-00			CAP.,FXD,ELCTLT:1UF,20%,50V	56289	162D105X0050CD2
C1354	290-0324-00			CAP.,FXD,ELCTLT:750UF,+75-10%,40V	56289	D46454
C1359	290-0745-00			CAP.,FXD,ELCTLT:22UF,+50-10%,25V	56289	502D225

Ckt No.	Tektronix Part No.	Serial/Model No. Eff	Dscont	Name & Description	Mfr Code	Mfr Part Number
C1362	281-0775-00			CAP.,FXD,CER DI:0.1UF,20%,50V	72982	8005D9AABZ5U104M
C1369	290-0745-00			CAP.,FXD,ELCTLT:22UF,+50-10%,25V	56289	502D225
C1370	290-0512-00			CAP.,FXD,ELCTLT:22UF,20%,15V	56289	196D226X0015KA1
C1371	290-0802-00			CAP.,FXD,ELCTLT:4700UF,+75-10%,16V	56289	D76401
C1377	290-0771-00			CAP.,FXD,ELCTLT:220UF,+50-10%,10VDC	56289	502D231
C1380	290-0798-00			CAP.,FXD,ELCTLT:180UF,+100-10%,40V	56289	672D187H040DM5C
C1381	281-0792-00			CAP.,FXD,CER DI:82PF,10%,100V	72982	8035D2AADC0G820K
C1382	281-0772-00			CAP.,FXD,CER DI:0.0047UF,10%,100V	04222	GC701C472K
C1383	290-0798-00	XB020550		CAP.,FXD,ELCTLT:180UF,+100-10%,40V	56289	672D187H040DM5C
C1388	281-0815-00			CAP.,FXD,CER DI:0.027UF,20%,50V	72982	8005D9AABW5R273M
C1392	290-0800-00			CAP.,FXD,ELCTLT:250UF,+100-10%,20V	56289	672D257H0200M5C
C1394	290-0177-00			CAP.,FXD,ELCTLT:1UF,20%,50V	56289	162D105X0050CD2
C1396	290-0771-00			CAP.,FXD,ELCTLT:220UF,+50-10%,10VDC	56289	502D231
C1397	281-0775-00			CAP.,FXD,CER DI:0.1UF,20%,50V	72982	8005D9AABZ5U104M
C1413	281-0814-00			CAP.,FXD,CER DI:100PF,10%,100V	04222	GC70-1-A101K
C1414	290-0721-00	XB020550		CAP.,FXD,ELCTLT:100UF,20%,20V	56289	196D107X0020TE3
C1419	290-0512-00			CAP.,FXD,ELCTLT:22UF,20%,15V	56289	196D226X0015KA1
C1421	281-0814-00			CAP.,FXD,CER DI:100PF,10%,100V	04222	GC70-1-A101K
C1424	290-0721-00	XB020550		CAP.,FXD,ELCTLT:100UF,20%,20V	56289	196D107X0020TE3
C1521	281-0762-00	B010100	B021549	CAP.,FXD,CER DI:27PF,20%,100V	72982	8035D9AADC0G270M
C1521	281-0625-00	B021550		CAP.,FXD,CER DI:35PF,5%,500V	59660	308-000C0G0350J
C1526	281-0762-00	B010100	B021549	CAP.,FXD,CER DI:27PF,20%,100V	72982	8035D9AADC0G270M
C1526	281-0625-00	B021550		CAP.,FXD,CER DI:35PF,5%,500V	59660	308-000C0G0350J
CR15	152-0323-00			SEMICOND DEVICE:SILICON,35V,0.1A	80009	152-0323-00
CR65	152-0323-00			SEMICOND DEVICE:SILICON,35V,0.1A	80009	152-0323-00
CR115	152-0323-00			SEMICOND DEVICE:SILICON,35V,0.1A	80009	152-0323-00
CR180	152-0141-02			SEMICOND DEVICE:SILICON,30V,150MA	01295	1N4152R
CR181	152-0141-02			SEMICOND DEVICE:SILICON,30V,150MA	01295	1N4152R
CR183	152-0141-02			SEMICOND DEVICE:SILICON,30V,150MA	01295	1N4152R
CR185	152-0141-02			SEMICOND DEVICE:SILICON,30V,150MA	01295	1N4152R
CR201	152-0321-00			SEMICOND DEVICE:SILICON,30V,0.1A	07263	FSA1480
CR251	152-0141-02			SEMICOND DEVICE:SILICON,30V,150MA	01295	1N4152R
CR252	152-0141-02			SEMICOND DEVICE:SILICON,30V,150MA	01295	1N4152R
CR253	152-0141-02			SEMICOND DEVICE:SILICON,30V,150MA	01295	1N4152R
CR254	152-0141-02			SEMICOND DEVICE:SILICON,30V,150MA	01295	1N4152R
CR272	152-0075-00			SEMICOND DEVICE:GE,25V,40MA	14433	G866
CR273	152-0075-00			SEMICOND DEVICE:GE,25V,40MA	14433	G866
CR290	152-0107-00			SEMICOND DEVICE:SILICON,400V,400MA	01295	G727
CR291	152-0323-00	B010100	B020549	SEMICOND DEVICE:SILICON,35V,0.1A	80009	152-0323-00
CR291	152-0323-01	B020550		SEMICOND DEVICE:SILICON,35V,100MA	03508	DE101
CR294	152-0107-00			SEMICOND DEVICE:SILICON,400V,400MA	01295	G727
CR320	152-0141-02			SEMICOND DEVICE:SILICON,30V,150MA	01295	1N4152R
CR324	152-0141-02			SEMICOND DEVICE:SILICON,30V,150MA	01295	1N4152R
CR325	152-0141-02			SEMICOND DEVICE:SILICON,30V,150MA	01295	1N4152R
CR326	152-0141-02			SEMICOND DEVICE:SILICON,30V,150MA	01295	1N4152R
CR356	152-0141-02			SEMICOND DEVICE:SILICON,30V,150MA	01295	1N4152R
CR390	152-0141-02			SEMICOND DEVICE:SILICON,30V,150MA	01295	1N4152R
CR391	152-0141-02			SEMICOND DEVICE:SILICON,30V,150MA	01295	1N4152R
CR393	152-0322-00			SEMICOND DEVICE:SILICON,15V,HOT CARRIER	50434	5082-2672
CR394	152-0322-00			SEMICOND DEVICE:SILICON,15V,HOT CARRIER	50434	5082-2672
CR417	152-0165-00	B010100	B020874	SEMICOND DEVICE:SILICON,200V,10 PA AT 3V	80009	152-0165-00
CR417	152-0321-00	B020875		SEMICOND DEVICE:SILICON,30V,0.1A	07263	FSA1480
CR418	152-0165-00	B010100	B020874X	SEMICOND DEVICE:SILICON,200V,10 PA AT 3V	80009	152-0165-00
CR430	152-0323-00	B010100	B010299	SEMICOND DEVICE:SILICON,35V,0.1A	80009	152-0323-00
CR430	152-0323-01	B010300		SEMICOND DEVICE:SILICON,35V,100MA	03508	DE101
CR431	152-0141-02			SEMICOND DEVICE:SILICON,30V,150MA	01295	1N4152R
CR432	152-0141-02			SEMICOND DEVICE:SILICON,30V,150MA	01295	1N4152R

Ckt No.	Tektronix Part No.	Serial/Model No. Eff	Dscont	Name & Description	Mfr Code	Mfr Part Number
CR437	152-0141-02			SEMICOND DEVICE:SILICON,30V,150MA	01295	1N4152R
CR438	152-0141-02			SEMICOND DEVICE:SILICON,30V,150MA	01295	1N4152R
CR439	152-0141-02			SEMICOND DEVICE:SILICON,30V,150MA	01295	1N4152R
CR453	152-0141-02			SEMICOND DEVICE:SILICON,30V,150MA	01295	1N4152R
CR511	152-0141-02			SEMICOND DEVICE:SILICON,30V,150MA	01295	1N4152R
CR512	152-0141-02			SEMICOND DEVICE:SILICON,30V,150MA	01295	1N4152R
CR513	152-0141-02			SEMICOND DEVICE:SILICON,30V,150MA	01295	1N4152R
CR514	152-0141-02			SEMICOND DEVICE:SILICON,30V,150MA	01295	1N4152R
CR515	152-0141-02			SEMICOND DEVICE:SILICON,30V,150MA	01295	1N4152R
CR516	152-0141-02			SEMICOND DEVICE:SILICON,30V,150MA	01295	1N4152R
CR517	152-0141-02			SEMICOND DEVICE:SILICON,30V,150MA	01295	1N4152R
CR518	152-0141-02			SEMICOND DEVICE:SILICON,30V,150MA	01295	1N4152R
CR581	152-0141-02			SEMICOND DEVICE:SILICON,30V,150MA	01295	1N4152R
CR582	152-0141-02			SEMICOND DEVICE:SILICON,30V,150MA	01295	1N4152R
CR583	152-0141-02			SEMICOND DEVICE:SILICON,30V,150MA	01295	1N4152R
CR584	152-0141-02			SEMICOND DEVICE:SILICON,30V,150MA	01295	1N4152R
CR586	152-0141-02			SEMICOND DEVICE:SILICON,30V,150MA	01295	1N4152R
CR587	152-0141-02			SEMICOND DEVICE:SILICON,30V,150MA	01295	1N4152R
CR599	152-0141-02			SEMICOND DEVICE:SILICON,30V,150MA	01295	1N4152R
CR650	152-0141-02			SEMICOND DEVICE:SILICON,30V,150MA	01295	1N4152R
CR652	152-0322-00			SEMICOND DEVICE:SILICON,15V,HOT CARRIER	50434	5082-2672
CR653	152-0141-02			SEMICOND DEVICE:SILICON,30V,150MA	01295	1N4152R
CR657	152-0322-00			SEMICOND DEVICE:SILICON,15V,HOT CARRIER	50434	5082-2672
CR682	152-0141-02			SEMICOND DEVICE:SILICON,30V,150MA	01295	1N4152R
CR706	152-0246-00			SEMICOND DEVICE:SW,SI,40V,200MA	03508	DE140
CR709	152-0141-02			SEMICOND DEVICE:SILICON,30V,150MA	01295	1N4152R
CR710	152-0246-00			SEMICOND DEVICE:SW,SI,40V,200MA	03508	DE140
CR726	152-0246-00			SEMICOND DEVICE:SW,SI,40V,200MA	03508	DE140
CR729	152-0141-02			SEMICOND DEVICE:SILICON,30V,150MA	01295	1N4152R
CR730	152-0246-00			SEMICOND DEVICE:SW,SI,40V,200MA	03508	DE140
CR812	152-0141-02			SEMICOND DEVICE:SILICON,30V,150MA	01295	1N4152R
CR815	152-0075-00			SEMICOND DEVICE:GE,25V,40MA	14433	G866
CR851	152-0141-02			SEMICOND DEVICE:SILICON,30V,150MA	01295	1N4152R
CR852	152-0141-02			SEMICOND DEVICE:SILICON,30V,150MA	01295	1N4152R
CR853	152-0075-00			SEMICOND DEVICE:GE,25V,40MA	14433	G866
CR915	152-0141-02			SEMICOND DEVICE:SILICON,30V,150MA	01295	1N4152R
CR916	152-0141-02			SEMICOND DEVICE:SILICON,30V,150MA	01295	1N4152R
CR945	152-0141-02			SEMICOND DEVICE:SILICON,30V,150MA	01295	1N4152R
CR946	152-0141-02			SEMICOND DEVICE:SILICON,30V,150MA	01295	1N4152R
CR947	152-0141-02			SEMICOND DEVICE:SILICON,30V,150MA	01295	1N4152R
CR1106	152-0141-02			SEMICOND DEVICE:SILICON,30V,150MA	01295	1N4152R
CR1108	152-0141-02			SEMICOND DEVICE:SILICON,30V,150MA	01295	1N4152R
CR1140	152-0141-02			SEMICOND DEVICE:SILICON,30V,150MA	01295	1N4152R
CR1142	152-0141-02			SEMICOND DEVICE:SILICON,30V,150MA	01295	1N4152R
CR1311	152-0066-03			SEMICOND DEVICE:RECT,SI,400V,1A	80009	152-0066-03
CR1312	152-0066-03			SEMICOND DEVICE:RECT,SI,400V,1A	80009	152-0066-03
CR1313	152-0066-03			SEMICOND DEVICE:RECT,SI,400V,1A	80009	152-0066-03
CR1314	152-0066-03			SEMICOND DEVICE:RECT,SI,400V,1A	80009	152-0066-03
CR1329	152-0066-03	B010100	B020549X	SEMICOND DEVICE:RECT,SI,400V,1A	80009	152-0066-03
CR1339	152-0066-03			SEMICOND DEVICE:RECT,SI,400V,1A	80009	152-0066-03
CR1349	152-0066-03	B010100	B020549X	SEMICOND DEVICE:RECT,SI,400V,1A	80009	152-0066-03
CR1351	152-0066-03			SEMICOND DEVICE:RECT,SI,400V,1A	80009	152-0066-03
CR1352	152-0066-03			SEMICOND DEVICE:RECT,SI,400V,1A	80009	152-0066-03
CR1353	152-0066-03			SEMICOND DEVICE:RECT,SI,400V,1A	80009	152-0066-03
CR1354	152-0066-03			SEMICOND DEVICE:RECT,SI,400V,1A	80009	152-0066-03
CR1359	152-0066-03			SEMICOND DEVICE:RECT,SI,400V,1A	80009	152-0066-03
CR1369	152-0066-03			SEMICOND DEVICE:RECT,SI,400V,1A	80009	152-0066-03

Ckt No.	Tektronix Part No.	Serial/Model No. Eff	Dscont	Name & Description	Mfr Code	Mfr Part Number
CR1371	152-0066-03			SEMICOND DEVICE:RECT,SI,400V,1A	80009	152-0066-03
CR1372	152-0066-03			SEMICOND DEVICE:RECT,SI,400V,1A	80009	152-0066-03
CR1373	152-0066-03			SEMICOND DEVICE:RECT,SI,400V,1A	80009	152-0066-03
CR1374	152-0066-03			SEMICOND DEVICE:RECT,SI,400V,1A	80009	152-0066-03
CR1388	152-0333-00			SEMICOND DEVICE:SILICON,55V,200MA	07263	FDH-6012
CR1390	152-0672-00			SEMICOND DEVICE:RECT,SI,50V,3A,FAST REC	80009	152-0672-00
CR1397	152-0141-02			SEMICOND DEVICE:SILICON,30V,150MA	01295	1N4152R
CR1398	152-0141-02			SEMICOND DEVICE:SILICON,30V,150MA	01295	1N4152R
CR1520	150-1036-00	B010100	B020549X	LAMP,LED:RED,3.0V,40MA	01295	TIL 209A
CR1524	152-0141-02			SEMICOND DEVICE:SILICON,30V,150MA	01295	1N4152R
CR1526	152-0141-02			SEMICOND DEVICE:SILICON,30V,150MA	01295	1N4152R
DS270	150-1014-00			LAMP,LED:RED,50MA	58361	MV5054-1
DS283	150-1032-00			LT EMITTING DIO:YELLOW,580NM,40MA,MAX	53184	XC-5569-Y2
DS284	150-1014-00			LAMP,LED:RED,50MA	58361	MV5054-1
DS285	150-1017-00			LT EMITTING DIO:GREEN,550NM,55MA MAX	50437	LSM-16L-100
DS286	150-1017-00			LT EMITTING DIO:GREEN,550NM,55MA MAX	50437	LSM-16L-100
DS287	150-1014-00			LAMP,LED:RED,50MA	58361	MV5054-1
DS288	150-1017-00			LT EMITTING DIO:GREEN,550NM,55MA MAX	50437	LSM-16L-100
DS289	150-1014-00			LAMP,LED:RED,50MA	58361	MV5054-1
DS295	150-1014-00			LAMP,LED:RED,50MA	58361	MV5054-1
DS296	150-1014-00			LAMP,LED:RED,50MA	58361	MV5054-1
DS297	150-1014-00			LAMP,LED:RED,50MA	58361	MV5054-1
DS298	150-1014-00			LAMP,LED:RED,50MA	58361	MV5054-1
DS1520	150-1036-00	XB020550		LAMP,LED:RED,3.0V,40MA	01295	TIL 209A
E1390	276-0557-00			CORE,FERRITE:0.23 ID X 0.12 ID X 0.125	78488	57-0131
F1300	159-0042-00			FUSE,CARTRIDGE:3AG,0.75A,250V,FAST-BLOW	71400	AGC 3/4
	----- -----			(115V OPERATION)		
F1300	159-0029-00	B010100	B022111	FUSE,CARTRIDGE:3AG,0.3A,250V,SLOW-BLOW	71400	MDL3/10
	----- -----			(230V OPERATION)		
F1300	159-0029-01	B022112		FUSE,CARTRIDGE:BUSSMAN ONLY	71400	BUSS MDL 3/10
	----- -----			(230V OPERATION)		
F1300	159-0029-01	XB036387		FUSE,CARTRIDGE:BUSSMAN ONLY	71400	BUSS MDL 3/10
	----- -----			(OPTION A1,A2,A3,A4 ONLY)		
F1310	159-0114-00			FUSE,CARTRIDGE:1A,125VAC,FAST-BLOW	71400	GFA 1
F1312	159-0114-00			FUSE,CARTRIDGE:1A,125VAC,FAST-BLOW	71400	GFA 1
F1314	159-0059-00			FUSE,WIRE LEAD:5A,FAST-BLOW	71400	GFA5
FL1300	119-0389-00			FILTER,RAD INTE:115/230V,3A	02777	F11935-3
K180	148-0110-00			RELAY,THERMAL:SPST,15V,0.5A AT 500V	21317	MA181084-15
K181	108-0645-00			COIL,REED SW:4.8V SINGLE REED	80009	108-0645-00
K181-S1	260-1237-00			SWITCH,REED:SPST	95348	MR-455-MODIFIED
K182	148-0117-00			RELAY,REED:1 FORM A,5V,LOW THERMAL EMF	21317	051AY*700BAA
K183	108-0645-00			COIL,REED SW:4.8V SINGLE REED	80009	108-0645-00
K183-S1	260-1237-00			SWITCH,REED:SPST	95348	MR-455-MODIFIED
K184	148-0117-00			RELAY,REED:1 FORM A,5V,LOW THERMAL EMF	21317	051AY*700BAA
K186	148-0117-00			RELAY,REED:1 FORM A,5V,LOW THERMAL EMF	21317	051AY*700BAA
K320	108-0357-00			COIL,REED SW:REED DRIVE,6V,SINGLE	80009	108-0357-00
K320-S1	260-0722-00			SWITCH,REED:0.5A,500V,10W	12617	MRR-5
K324	148-0076-00			RELAY,REED:1 FORM A,5V,0.25A,100V	95348	F81-1447
K325	148-0076-00			RELAY,REED:1 FORM A,5V,0.25A,100V	95348	F81-1447
K326	108-0357-00			COIL,REED SW:REED DRIVE,6V,SINGLE	80009	108-0357-00
K326-S1	260-0722-00			SWITCH,REED:0.5A,500V,10W	12617	MRR-5
L20	108-0226-00			COIL,RF:100UH	76493	DWG B4257
L51	108-0226-00			COIL,RF:100UH	76493	DWG B4257
L155	108-0395-00			COIL,RF:64UH	80009	108-0395-00

Ckt No.	Tektronix Part No.	Serial/Model No. Eff	Dscont	Name & Description	Mfr Code	Mfr Part Number
L156	108-0395-00			COIL,RF:64UH	80009	108-0395-00
L157	108-0395-00			COIL,RF:64UH	80009	108-0395-00
L158	108-0395-00			COIL,RF:64UH	80009	108-0395-00
L801	108-0331-00			COIL,RF:0.75UH	80009	108-0331-00
L802	108-0331-00			COIL,RF:0.75UH	80009	108-0331-00
L1100	108-0436-00			COIL,RF:FIXED,240NH	80009	108-0436-00
L1134	108-0170-01			COIL,RF:FIXED,360NH	80009	108-0170-01
L1380	108-0858-00			COIL,RF:FIXED,3.2NH	80009	108-0858-00
L1392	108-0857-00			COIL,RF:FIXED,174UH	80009	108-0857-00
L1395	108-0337-00			COIL,RF:25UH	80009	108-0337-00
Q16	151-1090-02	B010100	B021249	TRANSISTOR:SILICON,FE,DUAL,N-CHANNEL	80009	151-1090-02
Q16	151-1115-00	B021250		TRANSISTOR:FE,N-CHAN,SI	80009	151-1115-00
Q42	151-1090-02	B010100	B021249	TRANSISTOR:SILICON,FE,DUAL,N-CHANNEL	80009	151-1090-02
Q42	151-1115-00	B021250		TRANSISTOR:FE,N-CHAN,SI	80009	151-1115-00
Q66	151-1090-02	B010100	B021249	TRANSISTOR:SILICON,FE,DUAL,N-CHANNEL	80009	151-1090-02
Q66	151-1115-00	B021250		TRANSISTOR:FE,N-CHAN,SI	80009	151-1115-00
Q102	151-1090-02	B010100	B021249	TRANSISTOR:SILICON,FE,DUAL,N-CHANNEL	80009	151-1090-02
Q102	151-1115-00	B021250		TRANSISTOR:FE,N-CHAN,SI	80009	151-1115-00
Q152	151-0207-00			TRANSISTOR:SILICON,NPN	03508	X32D6191
Q200	151-1005-00			TRANSISTOR:SILICON,JFE,N-CHANNEL	80009	151-1005-00
Q202	151-0188-00			TRANSISTOR:SILICON,PNP	04713	SPS6868K
Q220	151-0622-00			TRANSISTOR:SILICON,PNP	27014	92PU01AU51A
Q221	151-0622-00			TRANSISTOR:SILICON,PNP	27014	92PU01AU51A
Q225	151-0622-00			TRANSISTOR:SILICON,PNP	27014	92PU01AU51A
Q226	151-0622-00			TRANSISTOR:SILICON,PNP	27014	92PU01AU51A
Q228	151-0622-00			TRANSISTOR:SILICON,PNP	27014	92PU01AU51A
Q232	151-0301-00			TRANSISTOR:SILICON,PNP	27014	2N2907A
Q310	151-0190-00			TRANSISTOR:SILICON,NPN	07263	S032677
Q314	151-0190-00			TRANSISTOR:SILICON,NPN	07263	S032677
Q318	151-0190-00			TRANSISTOR:SILICON,NPN	07263	S032677
Q320	151-0188-00			TRANSISTOR:SILICON,PNP	04713	SPS6868K
Q326	151-0188-00			TRANSISTOR:SILICON,PNP	04713	SPS6868K
Q330	151-0188-00			TRANSISTOR:SILICON,PNP	04713	SPS6868K
Q332	151-0188-00			TRANSISTOR:SILICON,PNP	04713	SPS6868K
Q334	151-0188-00			TRANSISTOR:SILICON,PNP	04713	SPS6868K
Q336	151-0188-00			TRANSISTOR:SILICON,PNP	04713	SPS6868K
Q340	151-1039-00			TRANSISTOR:SILICON,JFE,P-CHANNEL	80009	151-1039-00
Q348	151-1005-00			TRANSISTOR:SILICON,JFE,N-CHANNEL	80009	151-1005-00
Q352	151-0342-00			TRANSISTOR:SILICON,PNP	07263	S035928
Q356	151-0341-00			TRANSISTOR:SILICON,NPN	07263	S040065
Q358	151-1021-00			TRANSISTOR:SILICON,JFE	17856	FN815
Q440	151-0190-00			TRANSISTOR:SILICON,NPN	07263	S032677
Q441	151-0190-00			TRANSISTOR:SILICON,NPN	07263	S032677
Q442	151-0190-00			TRANSISTOR:SILICON,NPN	07263	S032677
Q443	151-0190-00			TRANSISTOR:SILICON,NPN	07263	S032677
Q446	151-0190-00			TRANSISTOR:SILICON,NPN	07263	S032677
Q447	151-0190-00			TRANSISTOR:SILICON,NPN	07263	S032677
Q541	151-0302-00			TRANSISTOR:SILICON,NPN	07263	S038487
Q542	151-0471-00			TRANSISTOR:SILICON,NPN	80009	151-0471-00
Q543	151-0302-00			TRANSISTOR:SILICON,NPN	07263	S038487
Q544	151-0471-00			TRANSISTOR:SILICON,NPN	80009	151-0471-00
Q545	151-0302-00			TRANSISTOR:SILICON,NPN	07263	S038487
Q546	151-0471-00	B010100	B035317	TRANSISTOR:SILICON,NPN	80009	151-0471-00
Q546	151-0471-01	B035318		TRANSISTOR:SILICON,NPN,SEL	07263	S43851
Q547	151-0302-00			TRANSISTOR:SILICON,NPN	07263	S038487
Q548	151-0471-00	B010100	B035317	TRANSISTOR:SILICON,NPN	80009	151-0471-00
Q548	151-0471-01	B035318		TRANSISTOR:SILICON,NPN,SEL	07263	S43851

Ckt No.	Tektronix Part No.	Serial/Model No. Eff	Dscont	Name & Description	Mfr Code	Mfr Part Number
Q551	151-0302-00			TRANSISTOR:SILICON,NPN	07263	S038487
Q552	151-0471-00	B010100	B035317	TRANSISTOR:SILICON,NPN	80009	151-0471-00
Q552	151-0471-01	B035318		TRANSISTOR:SILICON,NPN,SEL	07263	S43851
Q553	151-0302-00			TRANSISTOR:SILICON,NPN	07263	S038487
Q554	151-0471-00			TRANSISTOR:SILICON,NPN	80009	151-0471-00
Q555	151-0302-00			TRANSISTOR:SILICON,NPN	07263	S038487
Q556	151-0471-00	B010100	B035317	TRANSISTOR:SILICON,NPN	80009	151-0471-00
Q556	151-0471-01	B035318		TRANSISTOR:SILICON,NPN,SEL	07263	S43851
Q557	151-0302-00			TRANSISTOR:SILICON,NPN	07263	S038487
Q558	151-0471-00	B010100	B035317	TRANSISTOR:SILICON,NPN	80009	151-0471-00
Q558	151-0471-01	B035318		TRANSISTOR:SILICON,NPN,SEL	07263	S43851
Q630	151-0301-00			TRANSISTOR:SILICON,PNP	27014	2N2907A
Q634	151-0301-00			TRANSISTOR:SILICON,PNP	27014	2N2907A
Q638	151-0301-00			TRANSISTOR:SILICON,PNP	27014	2N2907A
Q640	151-0301-00			TRANSISTOR:SILICON,PNP	27014	2N2907A
Q642	151-0301-00			TRANSISTOR:SILICON,PNP	27014	2N2907A
Q644	151-0301-00			TRANSISTOR:SILICON,PNP	27014	2N2907A
Q646	151-0301-00			TRANSISTOR:SILICON,PNP	27014	2N2907A
Q655	151-0216-00			TRANSISTOR:SILICON,PNP	04713	SPS8803
Q680	151-0341-00			TRANSISTOR:SILICON,NPN	07263	S040065
Q702	151-1054-00	XB020550		TRANSISTOR:SILICON,JFE,N-CHANNEL,DUAL	80009	151-1054-00
Q704	151-0216-00			TRANSISTOR:SILICON,PNP	04713	SPS8803
Q708	151-0273-00			TRANSISTOR:SILICON,NPN	80009	151-0273-00
Q722	151-1054-00	XB020550		TRANSISTOR:SILICON,JFE,N-CHANNEL,DUAL	80009	151-1054-00
Q724	151-0216-00			TRANSISTOR:SILICON,PNP	04713	SPS8803
Q726	151-0273-00			TRANSISTOR:SILICON,NPN	80009	151-0273-00
Q728	151-0216-00			TRANSISTOR:SILICON,PNP	04713	SPS8803
Q784A,B	151-0232-00			TRANSISTOR:SILICON,NPN,DUAL	80009	151-0232-00
Q1102	151-0438-00			TRANSISTOR:SILICON,PNP,SEL FROM SPS6927	80009	151-0438-00
Q1104	151-0438-00			TRANSISTOR:SILICON,PNP,SEL FROM SPS6927	80009	151-0438-00
Q1110	151-0438-00	B010100	B035249X	TRANSISTOR:SILICON,PNP,SEL FROM SPS6927	80009	151-0438-00
Q1130	151-0441-00			TRANSISTOR:SILICON,NPN	04713	SRF501
Q1140	151-0221-00	B010100	B035249X	TRANSISTOR:SILICON,PNP	04713	SPS246
Q1142	151-0221-00	B010100	B035249X	TRANSISTOR:SILICON,PNP	04713	SPS246
Q1200	151-0301-00			TRANSISTOR:SILICON,PNP	27014	2N2907A
Q1220	151-0302-00			TRANSISTOR:SILICON,NPN	07263	S038487
Q1320	151-0190-00			TRANSISTOR:SILICON,NPN	07263	S032677
Q1322	151-1006-00	B010100	B035389	TRANSISTOR:SILICON,JFE,N-CHANNEL	80009	151-1006-00
Q1322	151-1025-00	B035390		TRANSISTOR:SILICON,JFE,N-CHANNEL	01295	SFB8129
Q1324	151-0464-00	B010100	B035389	TRANSISTOR:SILICON,NPN	04713	SJE412
Q1324	151-0743-00	B035390		TRANSISTOR:SILICION,NPN	04713	STP3000
Q1330	151-0464-00			TRANSISTOR:SILICON,NPN	04713	SJE412
Q1340	151-1006-00	B010100	B035389	TRANSISTOR:SILICON,JFE,N-CHANNEL	80009	151-1006-00
Q1340	151-1025-00	B035390		TRANSISTOR:SILICON,JFE,N-CHANNEL	01295	SFB8129
Q1342	151-0188-00			TRANSISTOR:SILICON,PNP	04713	SPS6868K
Q1344	151-0462-00			TRANSISTOR:SILICON,PNP	04713	TIP30C
Q1350	151-0190-00			TRANSISTOR:SILICON,NPN	07263	S032677
Q1352	151-1005-00	B010100	B010299	TRANSISTOR:SILICON,JFE,N-CHANNEL	80009	151-1005-00
Q1352	151-1006-00	B010300		TRANSISTOR:SILICON,JFE,N-CHANNEL	80009	151-1006-00
Q1354	151-0464-00			TRANSISTOR:SILICON,NPN	04713	SJE412
Q1360	151-1005-00	B010100	B010299	TRANSISTOR:SILICON,JFE,N-CHANNEL	80009	151-1005-00
Q1360	151-1006-00	B010300		TRANSISTOR:SILICON,JFE,N-CHANNEL	80009	151-1006-00
Q1362	151-0188-00			TRANSISTOR:SILICON,PNP	04713	SPS6868K
Q1364	151-0462-00			TRANSISTOR:SILICON,PNP	04713	TIP30C
Q1370	151-0301-00			TRANSISTOR:SILICON,PNP	27014	2N2907A
Q1372	151-0188-00			TRANSISTOR:SILICON,PNP	04713	SPS6868K
Q1374	151-0482-00			TRANSISTOR:SILICON,PNP	80009	151-0482-00

Ckt No.	Tektronix Part No.	Serial/Model No. Eff	Dscont	Name & Description	Mfr Code	Mfr Part Number
Q1380	151-0188-00			TRANSISTOR:SILICON,PNP	04713	SPS6868K
Q1382	151-0341-00			TRANSISTOR:SILICON,NPN	07263	S040065
Q1384	151-0625-00			TRANSISTOR:SILICON,PNP	03508	D45H11
Q1386	151-0622-00			TRANSISTOR:SILICON,PNP	27014	92PU01AU51A
Q1390	151-0342-00			TRANSISTOR:SILICON,PNP	07263	S035928
Q1410	151-0302-00			TRANSISTOR:SILICON,NPN	07263	S038487
Q1414	151-0464-00			TRANSISTOR:SILICON,NPN	04713	SJE412
Q1420	151-0301-00			TRANSISTOR:SILICON,PNP	27014	2N2907A
Q1424	151-0462-00			TRANSISTOR:SILICON,PNP	04713	TIP30C
R10	321-0109-00			RES.,FXD,FILM:133 OHM,1%,0.125W	91637	MFF1816G133R0F
R12	321-0108-00			RES.,FXD,FILM:130 OHM,1%,0.125W	91637	MFF1816G130R0F
R13	321-0481-04			RES.,FXD,FILM:1M OHM,0.1%,0.125W	91637	HFF1816D10003B
R15	315-0474-00			RES.,FXD,CMPSN:470K OHM,5%,0.25W	01121	CB4745
R16	321-0817-07			RES.,FXD,FILM:949.2 OHM,0.1%,0.125W	24546	NE55E949.2 OHM
R18	311-1259-00			RES.,VAR,NONWIR:100 OHM,10%,0.50W	32997	3329P-L58-101
R20	315-0102-00			RES.,FXD,CMPSN:1K OHM,5%,0.25W	01121	CB1025
R21	315-0155-00			RES.,FXD,CMPSN:1.5M OHM,5%,0.25W	01121	CB1555
R22	321-0817-07			RES.,FXD,FILM:949.2 OHM,0.1%,0.125W	24546	NE55E949.2 OHM
R25	321-0729-06			RES.,FXD,FILM:786 OHM,0.25%,0.125W	91637	MFF1816C786R0C
R26	311-1263-00			RES.,VAR,NONWIR:1K OHM,10%,0.50W	32997	3329P-L58-102
R27	321-0773-03			RES.,FXD,FILM:400 OHM,0.25%,0.125W	91637	MFF1816D400R0C
R28	321-0222-07			RES.,FXD,FILM:2K OHM,0.1%,0.125W	91637	MFF1816C20000B
R29	321-0222-07			RES.,FXD,FILM:2K OHM,0.1%,0.125W	91637	MFF1816C20000B
R30	321-0729-06			RES.,FXD,FILM:786 OHM,0.25%,0.125W	91637	MFF1816C786R0C
R32	321-0773-03			RES.,FXD,FILM:400 OHM,0.25%,0.125W	91637	MFF1816D400R0C
R33	315-0470-00			RES.,FXD,CMPSN:47 OHM,5%,0.25W	01121	CB4705
R35	307-0548-00			RES,NTWK,FXD,FI:9.390 OHM,5%,0.15W	91637	MSP10A01391J
R42	321-0817-07			RES.,FXD,FILM:949.2 OHM,0.1%,0.125W	24546	NE55E949.2 OHM
R43	311-1259-00			RES.,VAR,NONWIR:100 OHM,10%,0.50W	32997	3329P-L58-101
R45	321-0729-06			RES.,FXD,FILM:786 OHM,0.25%,0.125W	91637	MFF1816C786R0C
R46	321-0773-03			RES.,FXD,FILM:400 OHM,0.25%,0.125W	91637	MFF1816D400R0C
R47	315-0470-00			RES.,FXD,CMPSN:47 OHM,5%,0.25W	01121	CB4705
R48	307-0548-00			RES,NTWK,FXD,FI:9.390 OHM,5%,0.15W	91637	MSP10A01391J
R50	315-0102-00			RES.,FXD,CMPSN:1K OHM,5%,0.25W	01121	CB1025
R51	315-0155-00			RES.,FXD,CMPSN:1.5M OHM,5%,0.25W	01121	CB1555
R53	311-1263-00			RES.,VAR,NONWIR:1K OHM,10%,0.50W	32997	3329P-L58-102
R54	321-0817-07			RES.,FXD,FILM:949.2 OHM,0.1%,0.125W	24546	NE55E949.2 OHM
R56	321-0222-07			RES.,FXD,FILM:2K OHM,0.1%,0.125W	91637	MFF1816C20000B
R57	321-0729-06			RES.,FXD,FILM:786 OHM,0.25%,0.125W	91637	MFF1816C786R0C
R58	321-0773-03			RES.,FXD,FILM:400 OHM,0.25%,0.125W	91637	MFF1816D400R0C
R59	321-0222-07			RES.,FXD,FILM:2K OHM,0.1%,0.125W	91637	MFF1816C20000B
R60	321-0109-00			RES.,FXD,FILM:133 OHM,1%,0.125W	91637	MFF1816G133R0F
R62	321-0108-00			RES.,FXD,FILM:130 OHM,1%,0.125W	91637	MFF1816G130R0F
R63	321-0481-04			RES.,FXD,FILM:1M OHM,0.1%,0.125W	91637	HFF1816D10003B
R65	315-0474-00			RES.,FXD,CMPSN:470K OHM,5%,0.25W	01121	CB4745
R66	321-0817-07			RES.,FXD,FILM:949.2 OHM,0.1%,0.125W	24546	NE55E949.2 OHM
R68	311-1259-00			RES.,VAR,NONWIR:100 OHM,10%,0.50W	32997	3329P-L58-101
R70A,B	311-1941-00			RES.,VAR,NONWIR:CKT BD,1K OHM,10%,0.50W	12697	CM41720
R71	315-0562-00			RES.,FXD,CMPSN:5.6K OHM,5%,0.25W	01121	CB5625
R72	315-0563-00			RES.,FXD,CMPSN:56K OHM,5%,0.25W	01121	CB5635
R74A,B	311-1941-00			RES.,VAR,NONWIR:CKT BD,1K OHM,10%,0.50W	12697	CM41720
R75	315-0562-00			RES.,FXD,CMPSN:5.6K OHM,5%,0.25W	01121	CB5625
R76	315-0563-00			RES.,FXD,CMPSN:56K OHM,5%,0.25W	01121	CB5635
R80	315-0913-00			RES.,FXD,CMPSN:91K OHM,5%,0.25W	01121	CB9135
R81	315-0155-00			RES.,FXD,CMPSN:1.5M OHM,5%,0.25W	01121	CB1555
R82	321-0817-07			RES.,FXD,FILM:949.2 OHM,0.1%,0.125W	24546	NE55E949.2 OHM
R85	321-0729-06			RES.,FXD,FILM:786 OHM,0.25%,0.125W	91637	MFF1816C786R0C

Ckt No.	Tektronix Part No.	Serial/Model No. Eff	Dscont	Name & Description	Mfr Code	Mfr Part Number
R86	311-1263-00			RES.,VAR,NONWIR:1K OHM,10%,0.50W	32997	3329P-L58-102
R87	321-0773-03			RES.,FXD,FILM:400 OHM,0.25%,0.125W	91637	MFF1816D400R0C
R88	321-0222-07			RES.,FXD,FILM:2K OHM,0.1%,0.125W	91637	MFF1816C20000B
R89	321-0222-07			RES.,FXD,FILM:2K OHM,0.1%,0.125W	91637	MFF1816C20000B
R90	321-0729-06			RES.,FXD,FILM:786 OHM,0.25%,0.125W	91637	MFF1816C786R0C
R92	321-0773-03			RES.,FXD,FILM:400 OHM,0.25%,0.125W	91637	MFF1816D400R0C
R93	315-0470-00			RES.,FXD,CMPSN:47 OHM,5%,0.25W	01121	CB4705
R95	307-0548-00			RES,NTWK,FXD,FI:9.390 OHM,5%,0.15W	91637	MSP10A01391J
R100	315-0913-00			RES.,FXD,CMPSN:91K OHM,5%,0.25W	01121	CB9135
R101	315-0155-00			RES.,FXD,CMPSN:1.5M OHM,5%,0.25W	01121	CB1555
R102	321-0817-07			RES.,FXD,FILM:949.2 OHM,0.1%,0.125W	24546	NE55E949.2 OHM
R103	311-1259-00			RES.,VAR,NONWIR:100 OHM,10%,0.50W	32997	3329P-L58-101
R105	321-0729-06			RES.,FXD,FILM:786 OHM,0.25%,0.125W	91637	MFF1816C786R0C
R107	321-0773-03			RES.,FXD,FILM:400 OHM,0.25%,0.125W	91637	MFF1816D400R0C
R110	321-0109-00			RES.,FXD,FILM:133 OHM,1%,0.125W	91637	MFF1816G133R0F
R112	321-0108-00			RES.,FXD,FILM:130 OHM,1%,0.125W	91637	MFF1816G130R0F
R113	321-0481-04			RES.,FXD,FILM:1M OHM,0.1%,0.125W	91637	HFF1816D10003B
R115	315-0474-00			RES.,FXD,CMPSN:470K OHM,5%,0.25W	01121	CB4745
R116	321-0817-07			RES.,FXD,FILM:949.2 OHM,0.1%,0.125W	24546	NE55E949.2 OHM
R120	321-0729-06			RES.,FXD,FILM:786 OHM,0.25%,0.125W	91637	MFF1816C786R0C
R122	321-0773-03			RES.,FXD,FILM:400 OHM,0.25%,0.125W	91637	MFF1816D400R0C
R123	315-0470-00			RES.,FXD,CMPSN:47 OHM,5%,0.25W	01121	CB4705
R125	311-1263-00			RES.,VAR,NONWIR:1K OHM,10%,0.50W	32997	3329P-L58-102
R126	321-0222-07			RES.,FXD,FILM:2K OHM,0.1%,0.125W	91637	MFF1816C20000B
R127	321-0222-07			RES.,FXD,FILM:2K OHM,0.1%,0.125W	91637	MFF1816C20000B
R130	315-0222-00			RES.,FXD,CMPSN:2.2K OHM,5%,0.25W	01121	CB2225
R131	315-0152-00			RES.,FXD,CMPSN:1.5K OHM,5%,0.25W	01121	CB1525
R133	315-0471-00			RES.,FXD,CMPSN:470 OHM,5%,0.25W	01121	CB4715
R134	315-0222-00			RES.,FXD,CMPSN:2.2K OHM,5%,0.25W	01121	CB2225
R135	315-0152-00			RES.,FXD,CMPSN:1.5K OHM,5%,0.25W	01121	CB1525
R137	315-0471-00			RES.,FXD,CMPSN:470 OHM,5%,0.25W	01121	CB4715
R140	315-0222-00			RES.,FXD,CMPSN:2.2K OHM,5%,0.25W	01121	CB2225
R141	315-0152-00			RES.,FXD,CMPSN:1.5K OHM,5%,0.25W	01121	CB1525
R143	315-0471-00			RES.,FXD,CMPSN:470 OHM,5%,0.25W	01121	CB4715
R144	315-0222-00			RES.,FXD,CMPSN:2.2K OHM,5%,0.25W	01121	CB2225
R145	315-0152-00			RES.,FXD,CMPSN:1.5K OHM,5%,0.25W	01121	CB1525
R147	315-0471-00			RES.,FXD,CMPSN:470 OHM,5%,0.25W	01121	CB4715
R150	315-0270-00			RES.,FXD,CMPSN:27 OHM,5%,0.25W	01121	CB2705
R151	315-0222-00			RES.,FXD,CMPSN:2.2K OHM,5%,0.25W	01121	CB2225
R152	315-0332-00			RES.,FXD,CMPSN:3.3K OHM,5%,0.25W	01121	CB3325
R153	315-0620-00			RES.,FXD,CMPSN:62 OHM,5%,0.25W	01121	CB6205
R154	315-0150-00			RES.,FXD,CMPSN:15 OHM,5%,0.25W	01121	CB1505
R160A,B	311-1941-00			RES.,VAR,NONWIR:CKT BD,1K OHM,10%,0.50W	12697	CM41720
R161	315-0562-00			RES.,FXD,CMPSN:5.6K OHM,5%,0.25W	01121	CB5625
R162	315-0563-00			RES.,FXD,CMPSN:56K OHM,5%,0.25W	01121	CB5635
R164A,B	311-1941-00			RES.,VAR,NONWIR:CKT BD,1K OHM,10%,0.50W	12697	CM41720
R165	315-0562-00			RES.,FXD,CMPSN:5.6K OHM,5%,0.25W	01121	CB5625
R166	315-0563-00			RES.,FXD,CMPSN:56K OHM,5%,0.25W	01121	CB5635
R169	311-1942-00			RES.,VAR,NONWIR:PNL,10K OHM,10%,1W,DUAL	01121	17M372
R190	308-0507-00			RES.,FXD,WW:1K OHM,1%,3W	91637	RS2B-B10000F
R192A-D	307-1092-00			RES NTWK,FXD FI:1,10K,1,9K,1,9K,9M OHM	73138	144-408-0
R193	303-0105-00			RES.,FXD,CMPSN:1M OHM,5%,1W	01121	GB1055
R199	308-0507-00			RES.,FXD,WW:1K OHM,1%,3W	91637	RS2B-B10000F
R200	315-0103-00			RES.,FXD,CMPSN:10K OHM,5%,0.25W	01121	CB1035
R202	315-0112-00			RES.,FXD,CMPSN:1.1K OHM,5%,0.25W	01121	CB1125
R204	315-0752-00			RES.,FXD,CMPSN:7.5K OHM,5%,0.25W	01121	CB7525
R205	315-0561-00			RES.,FXD,CMPSN:560 OHM,5%,0.25W	01121	CB5615

Ckt No.	Tektronix Part No.	Serial/Model No. Eff	Dscont	Name & Description	Mfr Code	Mfr Part Number
R207	315-0106-00			RES.,FXD,CMPSN:10M OHM,5%,0.25W	01121	CB1065
R208	315-0105-00			RES.,FXD,CMPSN:1M OHM,5%,0.25W	01121	CB1055
R210	315-0162-00			RES.,FXD,CMPSN:1.6K OHM,5%,0.25W	01121	CB1625
R211	315-0162-00			RES.,FXD,CMPSN:1.6K OHM,5%,0.25W	01121	CB1625
R215	315-0162-00			RES.,FXD,CMPSN:1.6K OHM,5%,0.25W	01121	CB1625
R216	315-0162-00			RES.,FXD,CMPSN:1.6K OHM,5%,0.25W	01121	CB1625
R218	315-0162-00			RES.,FXD,CMPSN:1.6K OHM,5%,0.25W	01121	CB1625
R220	315-0560-00			RES.,FXD,CMPSN:56 OHM,5%,0.25W	01121	CB5605
R221	315-0560-00			RES.,FXD,CMPSN:56 OHM,5%,0.25W	01121	CB5605
R225	315-0560-00			RES.,FXD,CMPSN:56 OHM,5%,0.25W	01121	CB5605
R226	315-0560-00			RES.,FXD,CMPSN:56 OHM,5%,0.25W	01121	CB5605
R228	315-0560-00			RES.,FXD,CMPSN:56 OHM,5%,0.25W	01121	CB5605
R229	315-0390-00			RES.,FXD,CMPSN:39 OHM,5%,0.25W	01121	CB3905
R231	315-0513-00			RES.,FXD,CMPSN:51K OHM,5%,0.25W	01121	CB5135
R232	315-0821-00			RES.,FXD,CMPSN:820 OHM,5%,0.25W	01121	CB8215
R233	315-0162-00			RES.,FXD,CMPSN:1.6K OHM,5%,0.25W	01121	CB1625
R234	315-0161-00			RES.,FXD,CMPSN:160 OHM,5%,0.25W	01121	CB1615
R235	315-0161-00			RES.,FXD,CMPSN:160 OHM,5%,0.25W	01121	CB1615
R240	315-0560-00			RES.,FXD,CMPSN:56 OHM,5%,0.25W	01121	CB5605
R242	315-0560-00			RES.,FXD,CMPSN:56 OHM,5%,0.25W	01121	CB5605
R244	315-0560-00			RES.,FXD,CMPSN:56 OHM,5%,0.25W	01121	CB5605
R246	315-0560-00			RES.,FXD,CMPSN:56 OHM,5%,0.25W	01121	CB5605
R247	315-0222-00	XB021250		RES.,FXD,CMPSN:2.2K OHM,5%,0.25W	01121	CB2225
R248	315-0222-00	XB021250		RES.,FXD,CMPSN:2.2K OHM,5%,0.25W	01121	CB2225
R249	315-0222-00	XB021250		RES.,FXD,CMPSN:2.2K OHM,5%,0.25W	01121	CB2225
R251	315-0221-00			RES.,FXD,CMPSN:220 OHM,5%,0.25W	01121	CB2215
R252	315-0153-00			RES.,FXD,CMPSN:15K OHM,5%,0.25W	01121	CB1535
R253	315-0153-00			RES.,FXD,CMPSN:15K OHM,5%,0.25W	01121	CB1535
R254	315-0162-00			RES.,FXD,CMPSN:1.6K OHM,5%,0.25W	01121	CB1625
R255	315-0101-00			RES.,FXD,CMPSN:100 OHM,5%,0.25W	01121	CB1015
R257	315-0101-00			RES.,FXD,CMPSN:100 OHM,5%,0.25W	01121	CB1015
R258	315-0162-00			RES.,FXD,CMPSN:1.6K OHM,5%,0.25W	01121	CB1625
R260	315-0561-00			RES.,FXD,CMPSN:560 OHM,5%,0.25W	01121	CB5615
R261	315-0101-00			RES.,FXD,CMPSN:100 OHM,5%,0.25W	01121	CB1015
R264	315-0105-00	B010100	B034424	RES.,FXD,CMPSN:1M OHM,5%,0.25W	01121	CB1055
R264	315-0104-00	B034425		RES.,FXD,CMPSN:100K OHM,5%,0.25W	01121	CB1045
R265	315-0105-00	B010100	B034424	RES.,FXD,CMPSN:1M OHM,5%,0.25W	01121	CB1055
R265	315-0104-00	B034425		RES.,FXD,CMPSN:100K OHM,5%,0.25W	01121	CB1045
R266	315-0105-00	B010100	B034424	RES.,FXD,CMPSN:1M OHM,5%,0.25W	01121	CB1055
R266	315-0104-00	B034425		RES.,FXD,CMPSN:100K OHM,5%,0.25W	01121	CB1045
R267	315-0105-00	B010100	B034424	RES.,FXD,CMPSN:1M OHM,5%,0.25W	01121	CB1055
R267	315-0104-00	B034425		RES.,FXD,CMPSN:100K OHM,5%,0.25W	01121	CB1045
R269	315-0202-00			RES.,FXD,CMPSN:2K OHM,5%,0.25W	01121	CB2025
R270	315-0432-00			RES.,FXD,CMPSN:4.3K OHM,5%,0.25W	01121	CB4325
R271	315-0390-00			RES.,FXD,CMPSN:39 OHM,5%,0.25W	01121	CB3905
R272	315-0390-00			RES.,FXD,CMPSN:39 OHM,5%,0.25W	01121	CB3905
R273	315-0390-00			RES.,FXD,CMPSN:39 OHM,5%,0.25W	01121	CB3905
R274	315-0390-00			RES.,FXD,CMPSN:39 OHM,5%,0.25W	01121	CB3905
R275	315-0390-00			RES.,FXD,CMPSN:39 OHM,5%,0.25W	01121	CB3905
R276	315-0390-00			RES.,FXD,CMPSN:39 OHM,5%,0.25W	01121	CB3905
R289	301-0105-00			RES.,FXD,CMPSN:1M OHM,5%,0.50W	01121	EB1055
R290	315-0272-00			RES.,FXD,CMPSN:2.7K OHM,5%,0.25W	01121	CB2725
R291	315-0104-00			RES.,FXD,CMPSN:100K OHM,5%,0.25W	01121	CB1045
R292	315-0104-00			RES.,FXD,CMPSN:100K OHM,5%,0.25W	01121	CB1045
R294	315-0512-00			RES.,FXD,CMPSN:5.1K OHM,5%,0.25W	01121	CB5125
R296	315-0474-00			RES.,FXD,CMPSN:470K OHM,5%,0.25W	01121	CB4745
R297	315-0474-00			RES.,FXD,CMPSN:470K OHM,5%,0.25W	01121	CB4745

Ckt No.	Tektronix Part No.	Serial/Model No. Eff	Dscont	Name & Description	Mfr Code	Mfr Part Number
R299	315-0102-00			RES.,FXD,CMPSN:1K OHM,5%,0.25W	01121	CB1025
R300	315-0103-00	XB020550		RES.,FXD,CMPSN:10K OHM,5%,0.25W	01121	CB1035
R302	315-0103-00	XB020550		RES.,FXD,CMPSN:10K OHM,5%,0.25W	01121	CB1035
R304	315-0103-00	XB020550		RES.,FXD,CMPSN:10K OHM,5%,0.25W	01121	CB1035
R308	315-0103-00	XB020550		RES.,FXD,CMPSN:10K OHM,5%,0.25W	01121	CB1035
R310	315-0201-00			RES.,FXD,CMPSN:200 OHM,5%,0.25W	01121	CB2015
R311	315-0103-00			RES.,FXD,CMPSN:10K OHM,5%,0.25W	01121	CB1035
R314	315-0201-00			RES.,FXD,CMPSN:200 OHM,5%,0.25W	01121	CB2015
R315	315-0103-00			RES.,FXD,CMPSN:10K OHM,5%,0.25W	01121	CB1035
R318	315-0201-00			RES.,FXD,CMPSN:200 OHM,5%,0.25W	01121	CB2015
R319	315-0103-00			RES.,FXD,CMPSN:10K OHM,5%,0.25W	01121	CB1035
R320	307-1096-00			RES NTWK,FXD,FI:7,2 OHM,2%,1W	91637	MSP08A01202G
R322	315-0103-00			RES.,FXD,CMPSN:10K OHM,5%,0.25W	01121	CB1035
R324	315-0103-00			RES.,FXD,CMPSN:10K OHM,5%,0.25W	01121	CB1035
R326	315-0103-00			RES.,FXD,CMPSN:10K OHM,5%,0.25W	01121	CB1035
R327	315-0202-00			RES.,FXD,CMPSN:2K OHM,5%,0.25W	01121	CB2025
R328	315-0103-00			RES.,FXD,CMPSN:10K OHM,5%,0.25W	01121	CB1035
R330	315-0103-00			RES.,FXD,CMPSN:10K OHM,5%,0.25W	01121	CB1035
R331	315-0751-00			RES.,FXD,CMPSN:750 OHM,5%,0.25W	01121	CB7515
R332	315-0103-00			RES.,FXD,CMPSN:10K OHM,5%,0.25W	01121	CB1035
R334	315-0103-00			RES.,FXD,CMPSN:10K OHM,5%,0.25W	01121	CB1035
R335	315-0202-00			RES.,FXD,CMPSN:2K OHM,5%,0.25W	01121	CB2025
R336	315-0103-00			RES.,FXD,CMPSN:10K OHM,5%,0.25W	01121	CB1035
R337	315-0202-00			RES.,FXD,CMPSN:2K OHM,5%,0.25W	01121	CB2025
R340	325-0252-00			RES.,FXD,FILM:6.95K OHM,0.1%,0.1W	91637	PTF55,T13
R343	311-1307-00			RES.,VAR,NONWIR:500 OHM,0.50W	32997	3299W-R27-501
R344, R345, R348	325-0254-00			RES SET,MATCHED:7.95K,7.5K,447.8 OHM,0.1%	03888	A3DT57
R350	315-0105-00			RES.,FXD,CMPSN:1M OHM,5%,0.25W	01121	CB1055
R351	315-0105-00			RES.,FXD,CMPSN:1M OHM,5%,0.25W	01121	CB1055
R352	315-0272-00			RES.,FXD,CMPSN:2.7K OHM,5%,0.25W	01121	CB2725
R353	315-0682-00			RES.,FXD,CMPSN:6.8K OHM,5%,0.25W	01121	CB6825
R355	315-0273-00			RES.,FXD,CMPSN:27K OHM,5%,0.25W	01121	CB2735
R356	315-0104-00			RES.,FXD,CMPSN:100K OHM,5%,0.25W	01121	CB1045
R357	315-0683-00			RES.,FXD,CMPSN:68K OHM,5%,0.25W	01121	CB6835
R358	311-1235-00			RES.,VAR,NONWIR:100K OHM,20%,0.50W	32997	3386F-T04-104
R359A-F	307-0554-00			RES NTWK,FXD FI:OHMS CURRENT SOURCE	80009	307-0554-00
R362	315-0105-00			RES.,FXD,CMPSN:1M OHM,5%,0.25W	01121	CB1055
R364	315-0105-00			RES.,FXD,CMPSN:1M OHM,5%,0.25W	01121	CB1055
R367	311-1235-00			RES.,VAR,NONWIR:100K OHM,20%,0.50W	32997	3386F-T04-104
R386	321-0644-00			RES.,FXD,FILM:100K OHM,0.25%,0.125W	91637	MFF1816C10002C
R387	321-0291-09			RES.,FXD,FILM:10.5K OHM,1%,0.125W	24546	NE55E1052F
R388	311-1237-00			RES.,VAR,NONWIR:1K OHM,10%,0.50W	32997	3386X-T07-102
R389	321-0751-06			RES.,FXD,FILM:50 OHM,0.25%,0.125W	91637	MFF1816C50R00C
R390	315-0270-00	B010100	B020549	RES.,FXD,CMPSN:27 OHM,5%,0.25W	01121	CB2705
R390	315-0105-00	B020550		RES.,FXD,CMPSN:1M OHM,5%,0.25W	01121	CB1055
R391	315-0104-00			RES.,FXD,CMPSN:100K OHM,5%,0.25W	01121	CB1045
R392	315-0104-00			RES.,FXD,CMPSN:100K OHM,5%,0.25W	01121	CB1045
R394	321-0193-07			RES.,FXD,FILM:1K OHM,0.1%,0.125W	91637	MFF1816C10000B
R395	321-0193-07			RES.,FXD,FILM:1K OHM,0.1%,0.125W	91637	MFF1816C10000B
R398	315-0754-00			RES.,FXD,CMPSN:750K OHM,5%,0.25W	01121	CB7545
R410	315-0105-00			RES.,FXD,CMPSN:1M OHM,5%,0.25W	01121	CB1055
R411	315-0125-00			RES.,FXD,CMPSN:1.2M OHM,5%,0.25W	01121	CB1255
R417	315-0152-00	B010100	B020549	RES.,FXD,CMPSN:1.5K OHM,5%,0.25W	01121	CB1525
R417	321-0206-02	B020550		RES.,FXD,FILM:1.37K OHM,0.5%,0.125W	91637	MFF1816D13700D
R418	315-0561-00	B010100	B020549	RES.,FXD,CMPSN:560 OHM,5%,0.25W	01121	CB5615

Ckt No.	Tektronix Part No.	Serial/Model No. Eff	Dscont	Name & Description	Mfr Code	Mfr Part Number
R418	321-0609-07	B020550		RES.,FXD,FILM:480 OHM,0.1%,0.125W	91637	MFF1816C480R0B
R419	315-0152-00	B010100	B020549	RES.,FXD,CMPSN:1.5K OHM,5%,0.25W	01121	CB1525
R419	321-0206-02	B020550		RES.,FXD,FILM:1.37K OHM,0.5%,0.125W	91637	MFF1816D13700D
R424	321-0201-09			RES.,FXD,FILM:1.21K OHM,1%,0.125W	24546	NE55E1211F
R425	325-0253-00			RES SET,MATCHED:44.18K,7.5K,2.853K OHM	03888	A3DT56
R426	----- -----			(FURNISHED AS A UNIT WITH R428)		
R427	311-1307-00			RES.,VAR,NONWIR:500 OHM,0.50W	32997	3299W-R27-501
R428	325-0253-00			RES SET,MATCHED:44.18K,7.5K,2.853K OHM	03888	A3DT56
	----- -----			(FURNISHED AS A UNIT WITH R425 & R426)		
R431	321-0385-00			RES.,FXD,FILM:100K OHM,1%,0.125W	91637	MFF1816G10002F
R432	315-0622-00			RES.,FXD,CMPSN:6.2K OHM,5%,0.25W	01121	CB6225
R433	315-0623-00			RES.,FXD,CMPSN:62K OHM,5%,0.25W	01121	CB6235
R434	315-0620-00	B010100	B020839	RES.,FXD,CMPSN:62 OHM,5%,0.25W	01121	CB6205
R434	315-0300-00	B020840		RES.,FXD,CMPSN:30 OHM,5%,0.25W	01121	CB3005
R437	315-0332-00	B010100	B020549	RES.,FXD,CMPSN:3.3K OHM,5%,0.25W	01121	CB3325
R437	315-0183-00	B020550		RES.,FXD,CMPSN:18K OHM,5%,0.25W	01121	CB1835
R440	315-0104-00	XB020730		RES.,FXD,CMPSN:100K OHM,5%,0.25W	01121	CB1045
R441	315-0121-00			RES.,FXD,CMPSN:120 OHM,5%,0.25W	01121	CB1215
R442	315-0511-00	XB020550		RES.,FXD,CMPSN:510 OHM,5%,0.25W	01121	CB5115
R443	315-0121-00			RES.,FXD,CMPSN:120 OHM,5%,0.25W	01121	CB1215
R444	315-0511-00	XB020550		RES.,FXD,CMPSN:510 OHM,5%,0.25W	01121	CB5115
R445	315-0511-00	XB020550		RES.,FXD,CMPSN:510 OHM,5%,0.25W	01121	CB5115
R446	315-0121-00			RES.,FXD,CMPSN:120 OHM,5%,0.25W	01121	CB1215
R447	315-0202-00			RES.,FXD,CMPSN:2K OHM,5%,0.25W	01121	CB2025
R448	315-0104-00	XB020730		RES.,FXD,CMPSN:100K OHM,5%,0.25W	01121	CB1045
R449	315-0104-00	XB020730		RES.,FXD,CMPSN:100K OHM,5%,0.25W	01121	CB1045
R450	315-0103-00			RES.,FXD,CMPSN:10K OHM,5%,0.25W	01121	CB1035
R451	315-0123-00			RES.,FXD,CMPSN:12K OHM,5%,0.25W	01121	CB1235
R453	315-0123-00			RES.,FXD,CMPSN:12K OHM,5%,0.25W	01121	CB1235
R454	315-0123-00			RES.,FXD,CMPSN:12K OHM,5%,0.25W	01121	CB1235
R456	315-0473-00			RES.,FXD,CMPSN:47K OHM,5%,0.25W	01121	CB4735
R457	315-0183-00			RES.,FXD,CMPSN:18K OHM,5%,0.25W	01121	CB1835
R458	315-0103-00			RES.,FXD,CMPSN:10K OHM,5%,0.25W	01121	CB1035
R460	315-0103-00	XB020550		RES.,FXD,CMPSN:10K OHM,5%,0.25W	01121	CB1035
R473	315-0122-00			RES.,FXD,CMPSN:1.2K OHM,5%,0.25W	01121	CB1225
R474	321-0361-00			RES.,FXD,FILM:56.2K OHM,1%,0.125W	91637	MFF1816G56201F
R475	321-0318-03			RES.,FXD,FILM:20K OHM,0.25%,0.125W	24546	NC55C2002C
R476	321-0353-00			RES.,FXD,FILM:46.4K OHM,1%,0.125W	91637	MFF1816G46401F
R477	311-1337-00			RES.,VAR,NONWIR:25K OHM,10%,0.50W	73138	89-129-1
R478	321-0371-00			RES.,FXD,FILM:71.5K OHM,1%,0.125W	91637	MFF1816G71501F
R480	321-0618-04			RES.,FXD,FILM:250K OHM,0.1%,0.125W	07716	OBD
R481	321-0481-04			RES.,FXD,FILM:1M OHM,0.1%,0.125W	91637	HFF1816D10003B
R482	321-0376-00			RES.,FXD,FILM:80.6K OHM,1%,0.125W	91637	MFF1816G80601F
R483	321-0966-03			RES.,FXD,FILM:40K OHM,0.25%,0.125W	91637	MFF1816D40001C
R484	321-0373-04			RES.,FXD,FILM:75K OHM,0.1%,0.125W	91637	MFF1816D75001B
R486	321-0327-03			RES.,FXD,FILM:24.9K OHM,0.25%,0.125W	24546	NC55C2492C
R487	311-1240-00			RES.,VAR,NONWIR:25K OHM,10%,0.50W	73138	72-30-0
R490	315-0222-00			RES.,FXD,CMPSN:2.2K OHM,5%,0.25W	01121	CB2225
R491	315-0222-00			RES.,FXD,CMPSN:2.2K OHM,5%,0.25W	01121	CB2225
R492	315-0222-00			RES.,FXD,CMPSN:2.2K OHM,5%,0.25W	01121	CB2225
R493	315-0222-00			RES.,FXD,CMPSN:2.2K OHM,5%,0.25W	01121	CB2225
R494	315-0222-00			RES.,FXD,CMPSN:2.2K OHM,5%,0.25W	01121	CB2225
R511	315-0361-00			RES.,FXD,CMPSN:360 OHM,5%,0.25W	01121	CB3615
R512	315-0391-00			RES.,FXD,CMPSN:390 OHM,5%,0.25W	01121	CB3915
R513	315-0361-00			RES.,FXD,CMPSN:360 OHM,5%,0.25W	01121	CB3615
R514	315-0391-00			RES.,FXD,CMPSN:390 OHM,5%,0.25W	01121	CB3915
R516	315-0391-00			RES.,FXD,CMPSN:390 OHM,5%,0.25W	01121	CB3915

Ckt No.	Tektronix Part No.	Serial/Model No. Eff	Dscont	Name & Description	Mfr Code	Mfr Part Number
R517	315-0361-00			RES.,FXD,CMPSN:360 OHM,5%,0.25W	01121	CB3615
R518	315-0391-00			RES.,FXD,CMPSN:390 OHM,5%,0.25W	01121	CB3915
R519	315-0361-00			RES.,FXD,CMPSN:360 OHM,5%,0.25W	01121	CB3615
R530	315-0361-00			RES.,FXD,CMPSN:360 OHM,5%,0.25W	01121	CB3615
R532	315-0361-00			RES.,FXD,CMPSN:360 OHM,5%,0.25W	01121	CB3615
R534	315-0361-00			RES.,FXD,CMPSN:360 OHM,5%,0.25W	01121	CB3615
R541	315-0221-00			RES.,FXD,CMPSN:220 OHM,5%,0.25W	01121	CB2215
R542	315-0221-00			RES.,FXD,CMPSN:220 OHM,5%,0.25W	01121	CB2215
R544	315-0361-00			RES.,FXD,CMPSN:360 OHM,5%,0.25W	01121	CB3615
R545	315-0221-00			RES.,FXD,CMPSN:220 OHM,5%,0.25W	01121	CB2215
R546	315-0221-00			RES.,FXD,CMPSN:220 OHM,5%,0.25W	01121	CB2215
R551	315-0221-00			RES.,FXD,CMPSN:220 OHM,5%,0.25W	01121	CB2215
R552	315-0221-00			RES.,FXD,CMPSN:220 OHM,5%,0.25W	01121	CB2215
R555	315-0221-00			RES.,FXD,CMPSN:220 OHM,5%,0.25W	01121	CB2215
R556	315-0221-00			RES.,FXD,CMPSN:220 OHM,5%,0.25W	01121	CB2215
R581	315-0105-00			RES.,FXD,CMPSN:1M OHM,5%,0.25W	01121	CB1055
R582	315-0105-00			RES.,FXD,CMPSN:1M OHM,5%,0.25W	01121	CB1055
R583	315-0105-00			RES.,FXD,CMPSN:1M OHM,5%,0.25W	01121	CB1055
R584	315-0105-00			RES.,FXD,CMPSN:1M OHM,5%,0.25W	01121	CB1055
R586	315-0105-00			RES.,FXD,CMPSN:1M OHM,5%,0.25W	01121	CB1055
R587	315-0105-00			RES.,FXD,CMPSN:1M OHM,5%,0.25W	01121	CB1055
R599	315-0105-00			RES.,FXD,CMPSN:1M OHM,5%,0.25W	01121	CB1055
R600	315-0272-00			RES.,FXD,CMPSN:2.7K OHM,5%,0.25W	01121	CB2725
R620	315-0272-00			RES.,FXD,CMPSN:2.7K OHM,5%,0.25W	01121	CB2725
R621	315-0272-00			RES.,FXD,CMPSN:2.7K OHM,5%,0.25W	01121	CB2725
R631	315-0272-00			RES.,FXD,CMPSN:2.7K OHM,5%,0.25W	01121	CB2725
R632	315-0820-00			RES.,FXD,CMPSN:82 OHM,5%,0.25W	01121	CB8205
R633	315-0681-00			RES.,FXD,CMPSN:680 OHM,5%,0.25W	01121	CB6815
R635	315-0272-00			RES.,FXD,CMPSN:2.7K OHM,5%,0.25W	01121	CB2725
R636	315-0201-00			RES.,FXD,CMPSN:200 OHM,5%,0.25W	01121	CB2015
R637	315-0272-00			RES.,FXD,CMPSN:2.7K OHM,5%,0.25W	01121	CB2725
R638	315-0820-00			RES.,FXD,CMPSN:82 OHM,5%,0.25W	01121	CB8205
R641	315-0272-00			RES.,FXD,CMPSN:2.7K OHM,5%,0.25W	01121	CB2725
R642	315-0201-00			RES.,FXD,CMPSN:200 OHM,5%,0.25W	01121	CB2015
R643	315-0272-00			RES.,FXD,CMPSN:2.7K OHM,5%,0.25W	01121	CB2725
R644	315-0820-00			RES.,FXD,CMPSN:82 OHM,5%,0.25W	01121	CB8205
R645	315-0272-00			RES.,FXD,CMPSN:2.7K OHM,5%,0.25W	01121	CB2725
R646	315-0201-00			RES.,FXD,CMPSN:200 OHM,5%,0.25W	01121	CB2015
R647	315-0272-00			RES.,FXD,CMPSN:2.7K OHM,5%,0.25W	01121	CB2725
R648	315-0820-00			RES.,FXD,CMPSN:82 OHM,5%,0.25W	01121	CB8205
R650	315-0391-00			RES.,FXD,CMPSN:390 OHM,5%,0.25W	01121	CB3915
R652	315-0122-00			RES.,FXD,CMPSN:1.2K OHM,5%,0.25W	01121	CB1225
R653	315-0162-00			RES.,FXD,CMPSN:1.6K OHM,5%,0.25W	01121	CB1625
R654	311-1263-00			RES.,VAR,NONWIR:1K OHM,10%,0.50W	32997	3329P-L58-102
R655	321-0730-06			RES.,FXD,FILM:5.703K OHM,0.25%,0.125W	91637	MFF1816C57030C
R657	321-0193-07			RES.,FXD,FILM:1K OHM,0.1%,0.125W	91637	MFF1816C10000B
R670	321-1623-02			RES.,FXD,FILM:55.5K OHM,0.5%,0.125W	91637	MFF1816D55501D
R671	321-0211-00			RES.,FXD,FILM:1.54K OHM,1%,0.125W	91637	MFF1816G15400F
R672	311-1269-00			RES.,VAR,NONWIR:20K OHM,10%,0.50W	32997	3329P-L58-203
R673	321-0317-00			RES.,FXD,FILM:19.6K OHM,1%,0.125W	91637	MFF1816G19601F
R674	321-0211-00			RES.,FXD,FILM:1.54K OHM,1%,0.125W	91637	MFF1816G15400F
R675	311-1265-00			RES.,VAR,NONWIR:2K OHM,10%,0.50W	32997	3329P-L58-202
R678	311-1268-00			RES.,VAR,NONWIR:10K OHM,10%,0.50W	32997	3329P-L58-103
R682	315-0562-00			RES.,FXD,CMPSN:5.6K OHM,5%,0.25W	01121	CB5625
R683	315-0333-00			RES.,FXD,CMPSN:33K OHM,5%,0.25W	01121	CB3335
R684	315-0241-00			RES.,FXD,CMPSN:240 OHM,5%,0.25W	01121	CB2415
R687	315-0272-00			RES.,FXD,CMPSN:2.7K OHM,5%,0.25W	01121	CB2725

Ckt No.	Tektronix Part No.	Serial/Model No. Eff	Dscont	Name & Description	Mfr Code	Mfr Part Number
R688	315-0102-00			RES.,FXD,CMPSN:1K OHM,5%,0.25W	01121	CB1025
R706	315-0104-00			RES.,FXD,CMPSN:100K OHM,5%,0.25W	01121	CB1045
R707	315-0104-00			RES.,FXD,CMPSN:100K OHM,5%,0.25W	01121	CB1045
R714	315-0102-00	B010100	B020549	RES.,FXD,CMPSN:1K OHM,5%,0.25W	01121	CB1025
R714	315-0271-00	B020550		RES.,FXD,CMPSN:270 OHM,5%,0.25W	01121	CB2715
R725	315-0683-00	B010100	B020549	RES.,FXD,CMPSN:68K OHM,5%,0.25W	01121	CB6835
R725	315-0563-00	B020550		RES.,FXD,CMPSN:56K OHM,5%,0.25W	01121	CB5635
R726	315-0104-00			RES.,FXD,CMPSN:100K OHM,5%,0.25W	01121	CB1045
R727	315-0104-00			RES.,FXD,CMPSN:100K OHM,5%,0.25W	01121	CB1045
R731	315-0303-00			RES.,FXD,CMPSN:30K OHM,5%,0.25W	01121	CB3035
R734	315-0102-00	B010100	B020549	RES.,FXD,CMPSN:1K OHM,5%,0.25W	01121	CB1025
R734	315-0271-00	B020550		RES.,FXD,CMPSN:270 OHM,5%,0.25W	01121	CB2715
R781	315-0151-00			RES.,FXD,CMPSN:150 OHM,5%,0.25W	01121	CB1515
R782	321-0229-00			RES.,FXD,FILM:2.37K OHM,1%,0.125W	91637	MFF1816G23700F
R783	315-0151-00			RES.,FXD,CMPSN:150 OHM,5%,0.25W	01121	CB1515
R784	321-0229-00			RES.,FXD,FILM:2.37K OHM,1%,0.125W	91637	MFF1816G23700F
R786	315-0241-00			RES.,FXD,CMPSN:240 OHM,5%,0.25W	01121	CB2415
R787	311-1267-00			RES.,VAR,NONWIR:5K OHM,10%,0.50W	32997	3329P-L58-502
R791	315-0151-00			RES.,FXD,CMPSN:150 OHM,5%,0.25W	01121	CB1515
R794	315-0151-00			RES.,FXD,CMPSN:150 OHM,5%,0.25W	01121	CB1515
R797	321-0820-06			RES.,FXD,FILM:42K OHM,0.25%,0.125W	91637	MFF1816C42001C
R798	321-1609-03			RES.,FXD,FILM:2.02K OHM,0.25%,0.125W	24546	NC55C2021C
R804	315-0122-00			RES.,FXD,CMPSN:1.2K OHM,5%,0.25W	01121	CB1225
R806	307-0542-00			RES,NTWK,FXD,FI:10K OHM,5%,0.125W	91637	MSP06A01-103J
R812	315-0103-00	B010100	B035249	RES.,FXD,CMPSN:10K OHM,5%,0.25W	01121	CB1035
R812	315-0473-00	B035250		RES.,FXD,CMPSN:47K OHM,5%,0.25W	01121	CB4735
R814	315-0202-00			RES.,FXD,CMPSN:2K OHM,5%,0.25W	01121	CB2025
R815	315-0333-00			RES.,FXD,CMPSN:33K OHM,5%,0.25W	01121	CB3335
R818	315-0155-00			RES.,FXD,CMPSN:1.5M OHM,5%,0.25W	01121	CB1555
R820	307-0542-00			RES,NTWK,FXD,FI:10K OHM,5%,0.125W	91637	MSP06A01-103J
R822	315-0103-00			RES.,FXD,CMPSN:10K OHM,5%,0.25W	01121	CB1035
R824	315-0103-00			RES.,FXD,CMPSN:10K OHM,5%,0.25W	01121	CB1035
R825	315-0103-00			RES.,FXD,CMPSN:10K OHM,5%,0.25W	01121	CB1035
R826	315-0103-00			RES.,FXD,CMPSN:10K OHM,5%,0.25W	01121	CB1035
R844B-J	307-0446-00			RES,NTWK,FXD FI:10K OHM,20%,(9) RES	91637	MSP10A01-103M
R845	315-0103-00			RES.,FXD,CMPSN:10K OHM,5%,0.25W	01121	CB1035
R851	315-0103-00			RES.,FXD,CMPSN:10K OHM,5%,0.25W	01121	CB1035
R853	315-0103-00			RES.,FXD,CMPSN:10K OHM,5%,0.25W	01121	CB1035
R854	315-0101-00			RES.,FXD,CMPSN:100 OHM,5%,0.25W	01121	CB1015
R858	315-0271-00			RES.,FXD,CMPSN:270 OHM,5%,0.25W	01121	CB2715
R880	307-0542-00			RES,NTWK,FXD,FI:10K OHM,5%,0.125W	91637	MSP06A01-103J
R888	307-0542-00			RES,NTWK,FXD,FI:10K OHM,5%,0.125W	91637	MSP06A01-103J
R900	315-0103-00			RES.,FXD,CMPSN:10K OHM,5%,0.25W	01121	CB1035
R901	315-0103-00			RES.,FXD,CMPSN:10K OHM,5%,0.25W	01121	CB1035
R902	315-0103-00			RES.,FXD,CMPSN:10K OHM,5%,0.25W	01121	CB1035
R916	307-0542-00			RES,NTWK,FXD,FI:10K OHM,5%,0.125W	91637	MSP06A01-103J
R920	315-0274-00			RES.,FXD,CMPSN:270K OHM,5%,0.25W	01121	CB2745
R922B-J	307-0446-00			RES,NTWK,FXD FI:10K OHM,20%,(9) RES	91637	MSP10A01-103M
R924	307-0542-00			RES,NTWK,FXD,FI:10K OHM,5%,0.125W	91637	MSP06A01-103J
R930	315-0270-00	B010100	B035239	RES.,FXD,CMPSN:27 OHM,5%,0.25W	01121	CB2705
R930	315-0620-00	B035240		RES.,FXD,CMPSN:62 OHM,5%,0.25W	01121	CB6205
R932	315-0473-00	B010100	B035239	RES.,FXD,CMPSN:47K OHM,5%,0.25W	01121	CB4735
R932	315-0103-00	B035240		RES.,FXD,CMPSN:10K OHM,5%,0.25W	01121	CB1035
R940	315-0513-00			RES.,FXD,CMPSN:51K OHM,5%,0.25W	01121	CB5135
R944	315-0103-00			RES.,FXD,CMPSN:10K OHM,5%,0.25W	01121	CB1035
R945	315-0273-00			RES.,FXD,CMPSN:27K OHM,5%,0.25W	01121	CB2735
R946	315-0273-00			RES.,FXD,CMPSN:27K OHM,5%,0.25W	01121	CB2735

Ckt No.	Tektronix Part No.	Serial/Model No. Eff	Dscont	Name & Description	Mfr Code	Mfr Part Number
R947	315-0273-00			RES.,FXD,CMPSN:27K OHM,5%,0.25W	01121	CB2735
R948	315-0273-00			RES.,FXD,CMPSN:27K OHM,5%,0.25W	01121	CB2735
R949	315-0473-00			RES.,FXD,CMPSN:47K OHM,5%,0.25W	01121	CB4735
R981	315-0221-00			RES.,FXD,CMPSN:220 OHM,5%,0.25W	01121	CB2215
R982	315-0221-00			RES.,FXD,CMPSN:220 OHM,5%,0.25W	01121	CB2215
R983	315-0221-00			RES.,FXD,CMPSN:220 OHM,5%,0.25W	01121	CB2215
R984	315-0221-00			RES.,FXD,CMPSN:220 OHM,5%,0.25W	01121	CB2215
R1100	315-0512-00			RES.,FXD,CMPSN:5.1K OHM,5%,0.25W	01121	CB5125
R1102	315-0471-00			RES.,FXD,CMPSN:470 OHM,5%,0.25W	01121	CB4715
R1103	315-0471-00			RES.,FXD,CMPSN:470 OHM,5%,0.25W	01121	CB4715
R1106	315-0471-00			RES.,FXD,CMPSN:470 OHM,5%,0.25W	01121	CB4715
R1107	315-0121-00			RES.,FXD,CMPSN:120 OHM,5%,0.25W	01121	CB1215
R1108	315-0471-00			RES.,FXD,CMPSN:470 OHM,5%,0.25W	01121	CB4715
R1115	315-0221-00			RES.,FXD,CMPSN:220 OHM,5%,0.25W	01121	CB2215
R1116	315-0152-00			RES.,FXD,CMPSN:1.5K OHM,5%,0.25W	01121	CB1525
R1117	315-0271-00			RES.,FXD,CMPSN:270 OHM,5%,0.25W	01121	CB2715
R1120	315-0103-00			RES.,FXD,CMPSN:10K OHM,5%,0.25W	01121	CB1035
R1127	315-0101-00			RES.,FXD,CMPSN:100 OHM,5%,0.25W	01121	CB1015
R1130	315-0122-00			RES.,FXD,CMPSN:1.2K OHM,5%,0.25W	01121	CB1225
R1132	315-0102-00			RES.,FXD,CMPSN:1K OHM,5%,0.25W	01121	CB1025
R1134	315-0221-00			RES.,FXD,CMPSN:220 OHM,5%,0.25W	01121	CB2215
R1135	315-0182-00			RES.,FXD,CMPSN:1.8K OHM,5%,0.25W	01121	CB1825
R1140	315-0102-00			RES.,FXD,CMPSN:1K OHM,5%,0.25W	01121	CB1025
R1141	315-0750-00			RES.,FXD,CMPSN:75 OHM,5%,0.25W	01121	CB7505
R1142	315-0392-00			RES.,FXD,CMPSN:3.9K OHM,5%,0.25W	01121	CB3925
R1144	315-0271-00			RES.,FXD,CMPSN:270 OHM,5%,0.25W	01121	CB2715
R1148	315-0151-00			RES.,FXD,CMPSN:150 OHM,5%,0.25W	01121	CB1515
R1190	315-0472-00	XB020550		RES.,FXD,CMPSN:4.7K OHM,5%,0.25W	01121	CB4725
R1192	311-1862-00	XB020550	B023174	RES.,VAR,NONWIR:5K OHM,10%,0.50W	73138	82-102-1
R1192	311-1267-00	B023175		RES.,VAR,NONWIR:5K OHM,10%,0.50W	32997	3329P-L58-502
R1193	321-0314-00	XB020550		RES.,FXD,FILM:18.2K OHM,1%,0.125W	91637	MFF1816G18201F
R1200	321-0380-00			RES.,FXD,FILM:88.7K OHM,1%,0.125W	91637	MFF1816G88701F
R1201	315-0470-00			RES.,FXD,CMPSN:47 OHM,5%,0.25W	01121	CB4705
R1202	321-0363-00			RES.,FXD,FILM:59K OHM,1%,0.125W	91637	MFF1816G59001F
R1204	315-0103-00			RES.,FXD,CMPSN:10K OHM,5%,0.25W	01121	CB1035
R1205	315-0473-00			RES.,FXD,CMPSN:47K OHM,5%,0.25W	01121	CB4735
R1206	315-0202-00			RES.,FXD,CMPSN:2K OHM,5%,0.25W	01121	CB2025
R1207	315-0200-00			RES.,FXD,CMPSN:20 OHM,5%,0.25W	01121	CB2005
R1220	321-0373-03			RES.,FXD,FILM:75K OHM,0.25%,0.125W	91637	MFF1816D75001C
R1221	315-0470-00			RES.,FXD,CMPSN:47 OHM,5%,0.25W	01121	CB4705
R1222	315-0273-00			RES.,FXD,CMPSN:27K OHM,5%,0.25W	01121	CB2735
R1223	315-0202-00			RES.,FXD,CMPSN:2K OHM,5%,0.25W	01121	CB2025
R1224	315-0200-00			RES.,FXD,CMPSN:20 OHM,5%,0.25W	01121	CB2005
R1226	321-0775-03			RES.,FXD,FILM:45K OHM,0.25%,0.125W	91637	MFF1816D45001C
R1299	315-0100-00			RES.,FXD,CMPSN:10 OHM,5%,0.25W	01121	CB1005
R1320	315-0822-00			RES.,FXD,CMPSN:8.2K OHM,5%,0.25W	01121	CB8225
R1321	315-0102-00			RES.,FXD,CMPSN:1K OHM,5%,0.25W	01121	CB1025
R1323	321-0306-00			RES.,FXD,FILM:15K OHM,1%,0.125W	91637	MFF1816G15001F
R1324	321-0306-00			RES.,FXD,FILM:15K OHM,1%,0.125W	91637	MFF1816G15001F
R1325	307-0105-00			RES.,FXD,CMPSN:3.9 OHM,5%,0.25W	01121	CB39G5
R1326	307-0110-00			RES.,FXD,CMPSN:3 OHM,5%,0.25W	01121	CB30G5
R1330	315-0472-00			RES.,FXD,CMPSN:4.7K OHM,5%,0.25W	01121	CB4725
R1332	315-0102-00			RES.,FXD,CMPSN:1K OHM,5%,0.25W	01121	CB1025
R1334	321-0816-00			RES.,FXD,FILM:5K OHM,1%,0.125W	24546	NA55D5001F
R1335	321-0303-00			RES.,FXD,FILM:14K OHM,1%,0.125W	91637	MFF1816G14001F
R1341	321-0279-00			RES.,FXD,FILM:7.87K OHM,1%,0.125W	91637	MFF1816G78700F
R1342	311-1340-00			RES.,VAR,NONWIR:1K OHM,10%,0.50W	02111	43P102T672

Ckt No.	Tektronix Part No.	Serial/Model No. Eff	Dscont	Name & Description	Mfr Code	Mfr Part Number
R1343	321-0210-00			RES.,FXD,FILM:1.5K OHM,1%,0.125W	91637	MFF1816G15000F
R1344	315-0102-00			RES.,FXD,CMPSN:1K OHM,5%,0.25W	01121	CB1025
R1345	315-0152-00			RES.,FXD,CMPSN:1.5K OHM,5%,0.25W	01121	CB1525
R1346	321-0259-08			RES.,FXD,FILM:4.87K OHM,1%,0.125W	24546	NC55C4871F
R1347	321-0283-08			RES.,FXD,FILM:8.66K OHM,1%,0.125W	24546	NC55C8660F
R1349	307-0110-00			RES.,FXD,CMPSN:3 OHM,5%,0.25W	01121	CB30G5
R1350	315-0822-00			RES.,FXD,CMPSN:8.2K OHM,5%,0.25W	01121	CB8225
R1351	315-0102-00			RES.,FXD,CMPSN:1K OHM,5%,0.25W	01121	CB1025
R1353	321-0306-00			RES.,FXD,FILM:15K OHM,1%,0.125W	91637	MFF1816G15001F
R1354	321-0306-00			RES.,FXD,FILM:15K OHM,1%,0.125W	91637	MFF1816G15001F
R1356	307-0110-00			RES.,FXD,CMPSN:3 OHM,5%,0.25W	01121	CB30G5
R1361	321-0318-02	B010100	B020549	RES.,FXD,FILM:20K OHM,0.5%,0.125W	91637	MFF1816D20001D
R1361	321-0671-00	B020550		RES.,FXD,FILM:8.51K OHM,0.5%,0.125W	24546	NC55C8511D
R1362	311-1340-00			RES.,VAR,NONWIR:1K OHM,10%,0.50W	02111	43P102T672
R1363	321-0210-00	B010100	B020549	RES.,FXD,FILM:1.5K OHM,1%,0.125W	91637	MFF1816G15000F
R1363	321-0191-00	B020550		RES.,FXD,FILM:953 OHM,1%,0.125W	91637	MFF1816G953R0F
R1364	315-0102-00	B010100	B020549	RES.,FXD,CMPSN:1K OHM,5%,0.25W	01121	CB1025
R1364	321-0195-00	B020550		RES.,FXD,FILM:1.05K OHM,1%,0.125W	91637	MFF1816G10500F
R1365	315-0182-00			RES.,FXD,CMPSN:1.8K OHM,5%,0.25W	01121	CB1825
R1366	321-0816-00			RES.,FXD,FILM:5K OHM,1%,0.125W	24546	NA55D5001F
R1367	321-0289-00			RES.,FXD,FILM:10K OHM,1%,0.125W	91637	MFF1816G10001F
R1369	307-0110-00			RES.,FXD,CMPSN:3 OHM,5%,0.25W	01121	CB30G5
R1370	315-0102-00			RES.,FXD,CMPSN:1K OHM,5%,0.25W	01121	CB1025
R1372	315-0102-00			RES.,FXD,CMPSN:1K OHM,5%,0.25W	01121	CB1025
R1373	315-0272-00			RES.,FXD,CMPSN:2.7K OHM,5%,0.25W	01121	CB2725
R1375	321-0204-00			RES.,FXD,FILM:1.3K OHM,1%,0.125W	91637	MFF1816G13000F
R1376	321-0130-00			RES.,FXD,FILM:221 OHM,1%,0.125W	91637	MFF1816G221R0F
R1377	308-0679-00	B010100	B020549	RES.,FXD,WW:0.51 OHM,5%,2W	75042	BWH-R5100J
R1377	308-0793-00	B020550		RES.,FXD,WW:0.51 OHM,5%,0.50W	75042	BW20 .51 OHM 5%
R1380	315-0511-00			RES.,FXD,CMPSN:510 OHM,5%,0.25W	01121	CB5115
R1381	315-0272-00			RES.,FXD,CMPSN:2.7K OHM,5%,0.25W	01121	CB2725
R1382	315-0682-00			RES.,FXD,CMPSN:6.8K OHM,5%,0.25W	01121	CB6825
R1384	315-0270-00			RES.,FXD,CMPSN:27 OHM,5%,0.25W	01121	CB2705
R1386	315-0472-00			RES.,FXD,CMPSN:4.7K OHM,5%,0.25W	01121	CB4725
R1388	301-0111-00			RES.,FXD,CMPSN:110 OHM,5%,0.50W	01121	EB1115
R1390	315-0221-00			RES.,FXD,CMPSN:220 OHM,5%,0.25W	01121	CB2215
R1394	308-0701-00			RES.,FXD,WW:0.12 OHM,5%,2W	75042	BWH-R1200J
R1397	321-0613-01			RES.,FXD,FILM:5.03K OHM,0.5%,0.125W	91637	MFF1816G50300D
R1398	321-0613-01			RES.,FXD,FILM:5.03K OHM,0.5%,0.125W	91637	MFF1816G50300D
R1410	321-0373-00			RES.,FXD,FILM:75K OHM, 1%,0.125W	91637	MFF1816G75001F
R1412	315-0183-00			RES.,FXD,CMPSN:18K OHM,5%,0.25W	01121	CB1835
R1414	321-0959-03			RES.,FXD,FILM:24.0K OHM,0.25%,0.125W	91637	CMF110216D24010C
R1418	321-0705-00			RES.,FXD,FILM:41.7K OHM,1%,0.125W	91637	MFF1816G41701F
R1419	321-0388-00			RES.,FXD,FILM:107K OHM,1%,0.125W	91637	MFF1816G10702F
R1420	315-0303-00			RES.,FXD,CMPSN:30K OHM,5%,0.25W	01121	CB3035
R1521	315-0273-00			RES.,FXD,CMPSN:27K OHM,5%,0.25W	01121	CB2735
R1522	321-1624-06			RES.,FXD,FILM:45.2K OHM,0.25%,0.125W	91637	MFF1816C45201C
R1525	315-0103-00			RES.,FXD,CMPSN:10K OHM,5%,0.25W	01121	CB1035
R1526	321-1642-06			RES.,FXD,FILM:72.3K OHM,0.25%,0.125W	91637	MFF1816C72301C
R1531	321-0616-01			RES.,FXD,FILM:52.6K OHM,0.5%,0.125W	91637	MFF1816G52601D
R1532	321-0293-03			RES.,FXD,FILM:11K OHM,0.25%,0.125W	24546	NC55C1102C
R1536	315-0822-00			RES.,FXD,CMPSN:8.2K OHM,5%,0.25W	01121	CB8225
R1537	321-0932-03			RES.,FXD,FILM:2.5K OHM,0.25%,0.125W	91637	MFF1816D25000C
R1540	315-0103-00			RES.,FXD,CMPSN:10K OHM,5%,0.25W	01121	CB1035
R1556	307-0110-00			RES.,FXD,CMPSN:3 OHM,5%,0.25W	01121	CB30G5
RT782	307-0125-00			RES.,THERMAL:500 OHM,10%,25 DEG C	50157	2D1595

Ckt No.	Tektronix Part No.	Serial/Model No. Eff	Dscont	Name & Description	Mfr Code	Mfr Part Number
S231	260-1870-00			SWITCH,TOGGLE:SPDT,0.4A,20V	09353	7107S V30B SPECL
S291	260-1869-00			SWITCH,TOGGLE:SPDT,0.4A,20V	09353	SPECIAL 7101
S292	260-1869-00			SWITCH,TOGGLE:SPDT,0.4A,20V	09353	SPECIAL 7101
S293	260-1869-00			SWITCH,TOGGLE:SPDT,0.4A,20V	09353	SPECIAL 7101
S295	260-1870-00			SWITCH,TOGGLE:SPDT,0.4A,20V	09353	7107S V30B SPECL
S1300	260-1849-00			SWITCH,PUSH:DPDT,4A,250VAC,W/BRKT	31918	OBD
S1310	260-1399-00			SWITCH,SLIDE:DPST,5A,125VAC	82389	11A-1447
T1300	120-1088-00	B010100	B010649	XFMR,PWR,STPDN:	80009	120-1088-00
T1300	120-1088-01	B010650		XFMR,PWR,STPDN:	80009	120-1088-01
T1310	120-1099-00			XFMR,PWR,STPDN:60HZ,10 TO 1 RATIO	95118	181P1
U34	153-1000-00			MICROCIRCUIT,DI:MATCHED	80009	153-1000-00
U44	153-1000-00			MICROCIRCUIT,DI:MATCHED	80009	153-1000-00
U94	156-0860-00			MICROCIRCUIT,DI:TRIPLE LINE RECEIVER	80009	156-0860-00
U124	156-0860-00			MICROCIRCUIT,DI:TRIPLE LINE RECEIVER	80009	156-0860-00
U138	156-0308-00			MICROCIRCUIT,DI:QUAD DIFF LINE RECEIVER	04713	SC22689P115
U234	156-0804-00			MICROCIRCUIT,DI:QUADRUPLE S-R LATCH	07263	74LS279PC
U238	150-1045-01			LAMP,LED:RED,7 SEG,1 DIGIT,SELECTED	80009	150-1045-01
U240						
U242						
U244	150-1046-01			LAMP,LED RDOUT:RED,7 SEG,1 DIGIT,SELECTED	80009	150-1046-01
U246	----- -----			(MATCHED SET OF 5)		
U248						
U250	156-0730-00			MICROCIRCUIT,DI:QUAD 2 INP POS-NOR BFR	80009	156-0730-00
U255	156-0383-00			MICROCIRCUIT,DI:QUAD 2-INPUT NOR GATE	80009	156-0383-00
U260	156-0888-00			MICROCIRCUIT,DI:HEX DIGIT DRIVER	80009	156-0888-00
U265	156-0888-00			MICROCIRCUIT,DI:HEX DIGIT DRIVER	80009	156-0888-00
U270	156-0886-00			MICROCIRCUIT,DI:BCD TO 7 SEGMENT DCDR	80009	156-0886-00
U310	156-0349-00			MICROCIRCUIT,DI:QUAD 2-INPUT NOR GATE	27014	CD4001CJ
U312	156-0885-00			MICROCIRCUIT,LI:OPTOELECTRONIC ISOLATOR	04713	SOC123A
U314	156-0885-00			MICROCIRCUIT,LI:OPTOELECTRONIC ISOLATOR	04713	SOC123A
U318	156-0885-00			MICROCIRCUIT,LI:OPTOELECTRONIC ISOLATOR	04713	SOC123A
U320	156-0111-00			MICROCIRCUIT,DI:SGL BCD-TO-DEC DEC/DRIVER	80009	156-0111-00
U324	156-0163-00			MICROCIRCUIT,DI:TRIPLE 3-INPUT POS AND GATE	80009	156-0163-00
U340	156-0223-00			MICROCIRCUIT,LI:OPERATIONAL AMPLIFIER	27014	LM308H
U348	156-0223-00			MICROCIRCUIT,LI:OPERATIONAL AMPLIFIER	27014	LM308H
U358	156-0921-00	B010100	B035099	MICROCIRCUIT,LI:OPERATIONAL AMPLIFIER	02735	CA3140S
U358	156-1492-00	B035100		MICROCIRCUIT,LI:OPERATIONAL AMPLIFIER	24355	AD542JH
U392	156-0511-00			MICROCIRCUIT,LI:OPERATIONAL AMPLIFIER	18324	NE531N
U412	156-0067-00			MICROCIRCUIT,LI:OPERATIONAL AMPLIFIER	02735	85145
U422	156-0909-00	B010100	B020549	MICROCIRCUIT,LI:ADC ANALOG SIG CONDITIONER	32293	1TS80007
U422	156-0908-00	B020550		MICROCIRCUIT,LI:ADC SWITCH NETWORK	32293	8053ACDD
U428	156-0783-00			MICROCIRCUIT,LI:PRECISION VOLTAGE REFR	27014	LM399
U432	156-0908-00	B010100	B020549	MICROCIRCUIT,LI:ADC SWITCH NETWORK	32293	8053ACDD
U432	156-0909-00	B020550		MICROCIRCUIT,LI:ADC ANALOG SIG CONDITIONER	32293	1TS80007
U434	156-0754-00			MICROCIRCUIT,DI:DUAL 4-INPUT NOR GATES	80009	156-0754-00
U435	156-0754-00			MICROCIRCUIT,DI:DUAL 4-INPUT NOR GATES	80009	156-0754-00
U436A-F	156-0494-00			MICROCIRCUIT,DI:HEX INVERTER/BUFFER	80009	156-0494-00
U440	156-0885-00			MICROCIRCUIT,LI:OPTOELECTRONIC ISOLATOR	04713	SOC123A
U442	156-0885-00			MICROCIRCUIT,LI:OPTOELECTRONIC ISOLATOR	04713	SOC123A
U444	156-0885-00			MICROCIRCUIT,LI:OPTOELECTRONIC ISOLATOR	04713	SOC123A
U446	156-0350-00			MICROCIRCUIT,DI:QUAD 2-INPUT NAND GATE	80009	156-0350-00
U448	156-0366-00			MICROCIRCUIT,DI:DUAL D-TYPE F-F	80009	156-0366-00
U450	156-0350-00			MICROCIRCUIT,DI:QUAD 2-INPUT NAND GATE	80009	156-0350-00
U452	156-0350-00			MICROCIRCUIT,DI:QUAD 2-INPUT NAND GATE	80009	156-0350-00
U454	156-0366-00			MICROCIRCUIT,DI:DUAL D-TYPE F-F	80009	156-0366-00
U456	156-0349-00			MICROCIRCUIT,DI:QUAD 2-INPUT NOR GATE	27014	CD4001CJ

Ckt No.	Tektronix Part No.	Serial/Model No. Eff	Dscont	Name & Description	Mfr Code	Mfr Part Number
U458	156-0032-00			MICROCIRCUIT,DI:4-BIT BINARY COUNTER	80009	156-0032-00
U460A-D	156-0330-00			MICROCIRCUIT,DI:HEX.BUFFER	80009	156-0330-00
U462	156-0786-00			MICROCIRCUIT,DI:QUAD,EXCLUSIVE OR GATE	80009	156-0786-00
U480	156-0512-00			MICROCIRCUIT,LI:OPERATIONAL AMPLIFIER	27014	LM308N
U490	156-0389-00			MICROCIRCUIT,DI:4-BIT RT SHF,LFT SR	18324	N74LS95N OR F
U492	156-0165-00			MICROCIRCUIT,DI:DUAL 4-INPUT POS NOR GATE	01295	SN7425N
U510	156-0316-00			MICROCIRCUIT,DI:QUAD ECL TO TTL CONVERTER	04713	MC10125L
U512	153-1001-00			MICROCIRCUIT,DI:SELECTED	80009	153-1001-00
	----- -----			(U512, FURNISHED AS A UNIT WITH U584)		
U520	156-0739-00			MICROCIRCUIT,DI:QUAD 2-INP ORGATE	80009	156-0739-00
U522	156-0739-00			MICROCIRCUIT,DI:QUAD 2-INP ORGATE	80009	156-0739-00
U530	156-0180-00			MICROCIRCUIT,DI:QUAD 2-INPUT NAND GATE	01295	SN74S00(N OR J)
U560	156-0180-00			MICROCIRCUIT,DI:QUAD 2-INPUT NAND GATE	01295	SN74S00(N OR J)
U565	156-0180-00			MICROCIRCUIT,DI:QUAD 2-INPUT NAND GATE	01295	SN74S00(N OR J)
U570	156-0707-00			MICROCIRCUIT,DI:QUAD 2-INPUT EXCL OR GATE	01295	SN74S86N
U574	156-0180-00			MICROCIRCUIT,DI:QUAD 2-INPUT NAND GATE	01295	SN74S00(N OR J)
U578	156-0180-00			MICROCIRCUIT,DI:QUAD 2-INPUT NAND GATE	01295	SN74S00(N OR J)
U580	156-0320-02			MICROCIRCUIT,DI:TRIPLE 3-INPUT NAND GATE	01295	SN91340(N OR J)
U584	153-1001-00			MICROCIRCUIT,DI:SELECTED	80009	153-1001-00
	----- -----			(U584, FURNISHED AS A UNIT WITH U512)		
U588	156-0320-02			MICROCIRCUIT,DI:TRIPLE 3-INPUT NAND GATE	01295	SN91340(N OR J)
U591	155-0159-00			MICROCIRCUIT,DI:PULSE STRETCHER	80009	155-0159-00
U592	155-0159-00			MICROCIRCUIT,DI:PULSE STRETCHER	80009	155-0159-00
U593	155-0159-00			MICROCIRCUIT,DI:PULSE STRETCHER	80009	155-0159-00
U594	155-0159-00			MICROCIRCUIT,DI:PULSE STRETCHER	80009	155-0159-00
U596	155-0159-00			MICROCIRCUIT,DI:PULSE STRETCHER	80009	155-0159-00
U597	155-0159-00			MICROCIRCUIT,DI:PULSE STRETCHER	80009	155-0159-00
U598	155-0159-00			MICROCIRCUIT,DI:PULSE STRETCHER	80009	155-0159-00
U600	156-0388-00			MICROCIRCUIT,DI:DUAL D-TYPE FLIP-FLOP	80009	156-0388-00
U610	156-0149-00			MICROCIRCUIT,DI:DUAL 4-INPUT NAND SCHMITT	80009	156-0149-00
U615	156-0149-00			MICROCIRCUIT,DI:DUAL 4-INPUT NAND SCHMITT	80009	156-0149-00
U620	156-0388-00			MICROCIRCUIT,DI:DUAL D-TYPE FLIP-FLOP	80009	156-0388-00
U625	156-0382-00	B010100	B020549	MICROCIRCUIT,DI:QUAD 2-INPUT NAND GATE	01295	SN74LS00(N OR J)
U625	156-0383-00	B020550		MICROCIRCUIT,DI:QUAD 2-INPUT NOR GATE	80009	156-0383-00
U630	156-0129-00			MICROCIRCUIT,DI:QUAD 2-INPUT GATE	80009	156-0129-00
U635	156-0495-00			MICROCIRCUIT,LI:OPNL AMPL	27014	LM324N
U640	156-0495-00			MICROCIRCUIT,LI:OPNL AMPL	27014	LM324N
U670	156-0067-00			MICROCIRCUIT,LI:OPERATIONAL AMPLIFIER	02735	85145
U672	156-0158-00			MICROCIRCUIT,LI:DUAL OPERATIONAL AMPLIFIER	18324	MC1458N
U680	156-0030-00			MICROCIRCUIT,DI:QUAD 2-INPUT NAND GATE	01295	SN7400(N OR J)
U685	156-0495-00			MICROCIRCUIT,LI:OPNL AMPL	27014	LM324N
U690	156-0644-00			MICROCIRCUIT,DI:QUAD BILATERAL SWITCH	80009	156-0644-00
U695	156-0644-00			MICROCIRCUIT,DI:QUAD BILATERAL SWITCH	80009	156-0644-00
U700	155-0159-00			MICROCIRCUIT,DI:PULSE STRETCHER	80009	155-0159-00
U720	155-0159-00			MICROCIRCUIT,DI:PULSE STRETCHER	80009	155-0159-00
U781	156-0048-00			MICROCIRCUIT,LI:FIVE NPN TRANSISTOR ARRAY	02735	CA3046
U783	156-0048-00			MICROCIRCUIT,LI:FIVE NPN TRANSISTOR ARRAY	02735	CA3046
U800	156-0690-00			MICROCIRCUIT,DI:QUAD 2-INP NOR GATE	01295	SN74S02N
U802	156-0459-00			MICROCIRCUIT,DI:QUAD 2-INPUT AND GATE	01295	SN74S08(N OR J)
U803	156-0690-00	B010100	B020549X	MICROCIRCUIT,DI:QUAD 2-INP NOR GATE	01295	SN74S02N
U804	156-0178-00	B010100	B020549	MICROCIRCUIT,DI:TRIPLE 3-INPUT NOR GATE	01295	SN7427N
U804	156-0690-00	B020550		MICROCIRCUIT,DI:QUAD 2-INP NOR GATE	01295	SN74S02N
U806	156-0383-00	B010100	B035249	MICROCIRCUIT,DI:QUAD 2-INPUT NOR GATE	80009	156-0383-00
U806	156-0043-00	B035250		MICROCIRCUIT,DI:QUAD 2-INPUT POS NOR GATE	80009	156-0043-00
U808	156-0118-00			MICROCIRCUIT,DI:J-K MASTER-SLAVE FLIP-FLOP	80009	156-0118-00
U810	156-0703-00			MICROCIRCUIT,DI:4-2-3-2 INPUTAND-OR GATES	07263	74S64PC
U812	156-0382-00			MICROCIRCUIT,DI:QUAD 2-INPUT NAND GATE	01295	SN74LS00(N OR J)

Ckt No.	Tektronix Part No.	Serial/Model No. Eff	Dscont	Name & Description	Mfr Code	Mfr Part Number
U816	156-0382-00			MICROCIRCUIT,DI:QUAD 2-INPUT NAND GATE	01295	SN74LS00(N OR J)
U818	156-0402-00			MICROCIRCUIT,LI:TIMER	27014	LM555CN
U820	156-0733-00			MICROCIRCUIT,DI:DUAL MONOSTABLE MV	80009	156-0733-00
U824	156-0383-00			MICROCIRCUIT,DI:QUAD 2-INPUT NOR GATE	80009	156-0383-00
U825	156-0321-00			MICROCIRCUIT,DI:TRIPLE 3-INPUT NAND GATE	80009	156-0321-00
U826	156-0479-00			MICROCIRCUIT,DI:QUAD 2-INPUT OR GATE	27014	DM74LS32N
U828	156-0480-00			MICROCIRCUIT,DI:QUAD 2-INPUT AND GATE	01295	SN74LS08(N OR J)
U840	156-0883-00			MICROCIRCUIT,DI:100MHZ PRESETTABLE DECADE	01295	SN74S196J
U842	156-0626-00	B010100	B020549	MICROCIRCUIT,DI:DUAL DECADE CNTR	01295	SN74390N
U842	156-0910-00	B020550		MICROCIRCUIT,DI:DUAL DECADE COUNTER	80009	156-0910-00
U844	156-0626-00	B010100	B020549	MICROCIRCUIT,DI:DUAL DECADE CNTR	01295	SN74390N
U844	156-0910-00	B020550		MICROCIRCUIT,DI:DUAL DECADE COUNTER	80009	156-0910-00
U848	156-0366-00			MICROCIRCUIT,DI:DUAL D-TYPE F-F	80009	156-0366-00
U850	156-0480-00			MICROCIRCUIT,DI:QUAD 2-INPUT AND GATE	01295	SN74LS08(N OR J)
U854	156-0383-00			MICROCIRCUIT,DI:QUAD 2-INPUT NOR GATE	80009	156-0383-00
U856	156-0366-00			MICROCIRCUIT,DI:DUAL D-TYPE F-F	80009	156-0366-00
U858	156-0388-00			MICROCIRCUIT,DI:DUAL D-TYPE FLIP-FLOP	80009	156-0388-00
U886	156-0734-00			MICROCIRCUIT,DI:4-BIT R-SHF,L-SHF RGTR	01295	SN74LS295AN
U888	156-0734-00			MICROCIRCUIT,DI:4-BIT R-SHF,L-SHF RGTR	01295	SN74LS295AN
U890	156-0734-00			MICROCIRCUIT,DI:4-BIT R-SHF,L-SHF RGTR	01295	SN74LS295AN
U892	156-0734-00			MICROCIRCUIT,DI:4-BIT R-SHF,L-SHF RGTR	01295	SN74LS295AN
U894	156-0734-00			MICROCIRCUIT,DI:4-BIT R-SHF,L-SHF RGTR	01295	SN74LS295AN
U910	156-0382-00			MICROCIRCUIT,DI:QUAD 2-INPUT NAND GATE	01295	SN74LS00(N OR J)
U912	156-0386-00			MICROCIRCUIT,DI:TRIPLE 3-INPUT NAND GATE	04713	SN74LS10N OR J
U914	156-0385-00			MICROCIRCUIT,DI:HEX.INVERTER	80009	156-0385-00
U916	156-0766-00			MICROCIRCUIT,DI:QUAD 2 INP OR GATE	27014	MM74C32(N OR J)
U918	156-0494-00			MICROCIRCUIT,DI:HEX INVERTER/BUFFER	80009	156-0494-00
U922	156-0490-00			MICROCIRCUIT,DI:BCD TO DECIMAL DECODER	27014	DM74L42AN
U924	156-0766-00			MICROCIRCUIT,DI:QUAD 2 INP OR GATE	27014	MM74C32(N OR J)
U926	156-0766-00			MICROCIRCUIT,DI:QUAD 2 INP OR GATE	27014	MM74C32(N OR J)
U930	156-0767-00			MICROCIRCUIT,DI:HEX GATE	04713	MC14572UBCP OR L
U932	156-0349-00			MICROCIRCUIT,DI:QUAD 2-INPUT NOR GATE	27014	CD4001CJ
U934	156-0577-00			MICROCIRCUIT,DI:QUAD 2 INPUT AND GATE	80009	156-0577-00
U936	156-0793-00			MICROCIRCUIT,DI:DUAL 4-INP NAND GATE	04713	MC14012BCL
U940	156-0330-00			MICROCIRCUIT,DI:HEX.BUFFER	80009	156-0330-00
U944	156-0582-00			MICROCIRCUIT,DI:BINARY UP/DOWN COUNTER	04713	MC14516BCL
U950	156-0366-00			MICROCIRCUIT,DI:DUAL D-TYPE F-F	80009	156-0366-00
U952	156-0350-00			MICROCIRCUIT,DI:QUAD 2-INPUT NAND GATE	80009	156-0350-00
U954	156-0524-00			MICROCIRCUIT,DI:TRIPLE 3-INPUT NAND GATES	80009	156-0524-00
U958	156-0349-00			MICROCIRCUIT,DI:QUAD 2-INPUT NOR GATE	27014	CD4001CJ
U960	156-0767-00			MICROCIRCUIT,DI:HEX GATE	04713	MC14572UBCP OR L
U964	156-0350-00			MICROCIRCUIT,DI:QUAD 2-INPUT NAND GATE	80009	156-0350-00
U980	156-0386-00			MICROCIRCUIT,DI:TRIPLE 3-INPUT NAND GATE	04713	SN74LS10N OR J
U984	156-0382-00			MICROCIRCUIT,DI:QUAD 2-INPUT NAND GATE	01295	SN74LS00(N OR J)
U988	156-0186-00			MICROCIRCUIT,DI:QUAD 2-INPUT NAND GATE	01295	SN7403N
U990	156-0766-00			MICROCIRCUIT,DI:QUAD 2 INP OR GATE	27014	MM74C32(N OR J)
U994	156-0766-00			MICROCIRCUIT,DI:QUAD 2 INP OR GATE	27014	MM74C32(N OR J)
U998	156-0145-00			MICROCIRCUIT,DI:QUAD 2-INPUT POS NAND BFR	80009	156-0145-00
U1100	156-0860-00			MICROCIRCUIT,DI:TRIPLE LINE RECEIVER	80009	156-0860-00
U1112	156-0883-00			MICROCIRCUIT,DI:100MHZ PRESETTABLE DECADE	01295	SN74S196J
U1114	156-0626-00	B010100	B020549	MICROCIRCUIT,DI:DUAL DECADE CNTR	01295	SN74390N
U1114	156-0910-00	B020550		MICROCIRCUIT,DI:DUAL DECADE COUNTER	80009	156-0910-00
U1116	156-0626-00	B010100	B020549	MICROCIRCUIT,DI:DUAL DECADE CNTR	01295	SN74390N
U1116	156-0910-00	B020550		MICROCIRCUIT,DI:DUAL DECADE COUNTER	80009	156-0910-00
U1118	156-0626-00	B010100	B020549	MICROCIRCUIT,DI:DUAL DECADE CNTR	01295	SN74390N
U1118	156-0910-00	B020550		MICROCIRCUIT,DI:DUAL DECADE COUNTER	80009	156-0910-00
U1120	156-0656-00			MICROCIRCUIT,DI:DECADE COUNTER	01295	SN74LS90N OR J

Ckt No.	Tektronix Part No.	Serial/Model No. Eff	Dscont	Name & Description	Mfr Code	Mfr Part Number
U1122	156-0656-00			MICROCIRCUIT,DI:DECADE COUNTER	01295	SN74LS90N OR J
U1130	156-0798-00			MICROCIRCUIT,DI:DUAL 4 LINE TO 1 LINE	01295	SN74LS153
U1200	156-0158-00			MICROCIRCUIT,LI:DUAL OPERATIONAL AMPLIFIER	18324	MC1458N
U1320	156-0158-00			MICROCIRCUIT,LI:DUAL OPERATIONAL AMPLIFIER	18324	MC1458N
U1330	156-0067-00			MICROCIRCUIT,LI:OPERATIONAL AMPLIFIER	02735	85145
U1350	156-0158-00			MICROCIRCUIT,LI:DUAL OPERATIONAL AMPLIFIER	18324	MC1458N
U1370	156-0158-00			MICROCIRCUIT,LI:DUAL OPERATIONAL AMPLIFIER	18324	MC1458N
U1410	156-0158-00			MICROCIRCUIT,LI:DUAL OPERATIONAL AMPLIFIER	18324	MC1458N
U1520	156-0511-00			MICROCIRCUIT,LI:OPERATIONAL AMPLIFIER	18324	NE531N
VR150	152-0279-00			SEMICOND DEVICE:ZENER,0.4W,5.1V,5%	04713	SZG35010RL
VR473	152-0317-00			SEMICOND DEVICE:ZENER,0.25W,6.2V,5%	04713	SZG20012
VR653	152-0317-00			SEMICOND DEVICE:ZENER,0.25W,6.2V,5%	04713	SZG20012
VR1190	152-0175-00	XB020550		SEMICOND DEVICE:ZENER,0.4W,5.6V,5%	04713	SZG35008
VR1320	152-0243-00			SEMICOND DEVICE:ZENER,0.4W,15V,5%	14552	TD3810983
VR1329	152-0571-00	XB020550		SEMICOND DEVICE:ZENER,0.4W,16V,5%	80009	152-0571-00
VR1342	152-0317-00			SEMICOND DEVICE:ZENER,0.25W,6.2V,5%	04713	SZG20012
VR1346	152-0281-00			SEMICOND DEVICE:ZENER,0.4W,22V,5%	12954	1N969B
VR1349	152-0571-00	XB020550		SEMICOND DEVICE:ZENER,0.4W,16V,5%	80009	152-0571-00
VR1350	152-0243-00			SEMICOND DEVICE:ZENER,0.4W,15V,5%	14552	TD3810983
VR1362	152-0317-00			SEMICOND DEVICE:ZENER,0.25W,6.2V,5%	04713	SZG20012
VR1366	152-0281-00			SEMICOND DEVICE:ZENER,0.4W,22V,5%	12954	1N969B
VR1377	152-0309-00			SEMICOND DEVICE:ZENER,1W,6.2V,5%	04713	SZ14310
VR1397	152-0309-00			SEMICOND DEVICE:ZENER,1W,6.2V,5%	04713	SZ14310
VR1525	152-0280-00			SEMICOND DEVICE:ZENER,0.4W,6.2V,5%	80009	152-0280-00
Y1100	158-0106-00			XTAL UNIT,QTZ:100MHZ,+/-0.0025%,SERIES	13571	TEK158-0106-00

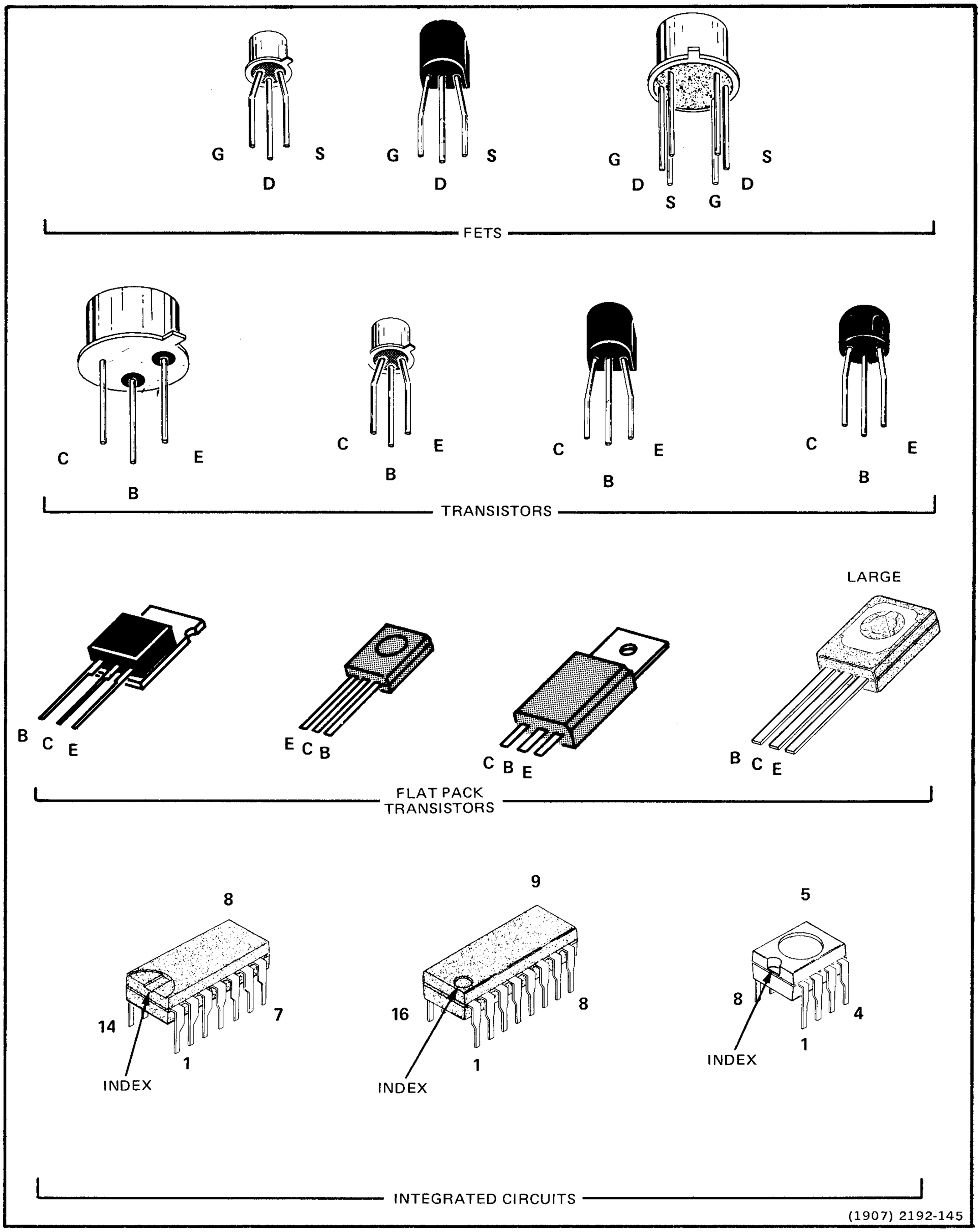

Figure 9-1. Semiconductor lead configuration.

DIAGRAMS AND CIRCUIT BOARD ILLUSTRATIONS

Symbols and Reference Designators

Electrical components shown on the diagrams are in the following units unless noted otherwise:

Capacitors = Values one or greater are in picofarads (pF).
Values less than one are in microfarads (μF).
Resistors = Ohms (Ω).

Graphic symbols and class designation letters are based on ANSI Standard Y32.2-1975.

Logic symbology is based on ANSI Y32.14-1973 in terms of positive logic. Logic symbols depict the logic function performed and may differ from the manufacturer's data.

The overline on a signal name indicates that the signal performs its intended function when it goes to the low state.

Abbreviations are based on ANSI Y1.1-1972.

Other ANSI standards that are used in the preparation of diagrams by Tektronix, Inc. are:

Y14.15, 1966	Drafting Practices.
Y14.2, 1973	Line Conventions and Lettering.
Y10.5, 1968	Letter Symbols for Quantities Used in Electrical Science and Electrical Engineering.

The following prefix letters are used as reference designators to identify components or assemblies on the diagrams.

A	Assembly, separable or repairable (circuit board, etc)
AT	Attenuator, fixed or variable
B	Motor
BT	Battery
C	Capacitor, fixed or variable
CB	Circuit breaker
CR	Diode, signal or rectifier
DL	Delay line
DS	Indicating device (lamp)
E	Spark Gap, Ferrite bead
F	Fuse
FL	Filter
H	Heat dissipating device (heat sink, heat radiator, etc)
HR	Heater
HY	Hybrid circuit
J	Connector, stationary portion
K	Relay
L	Inductor, fixed or variable
M	Meter
P	Connector, movable portion
Q	Transistor or silicon-controlled rectifier
R	Resistor, fixed or variable
RT	Thermistor
S	Switch or contactor
T	Transformer
TC	Thermocouple
TP	Test point
U	Assembly, inseparable or non-repairable (integrated circuit, etc.)
V	Electron tube
VR	Voltage regulator (zener diode, etc.)
W	Wirestrap or cable
Y	Crystal
Z	Phase shifter

The following special symbols may appear on the diagrams:

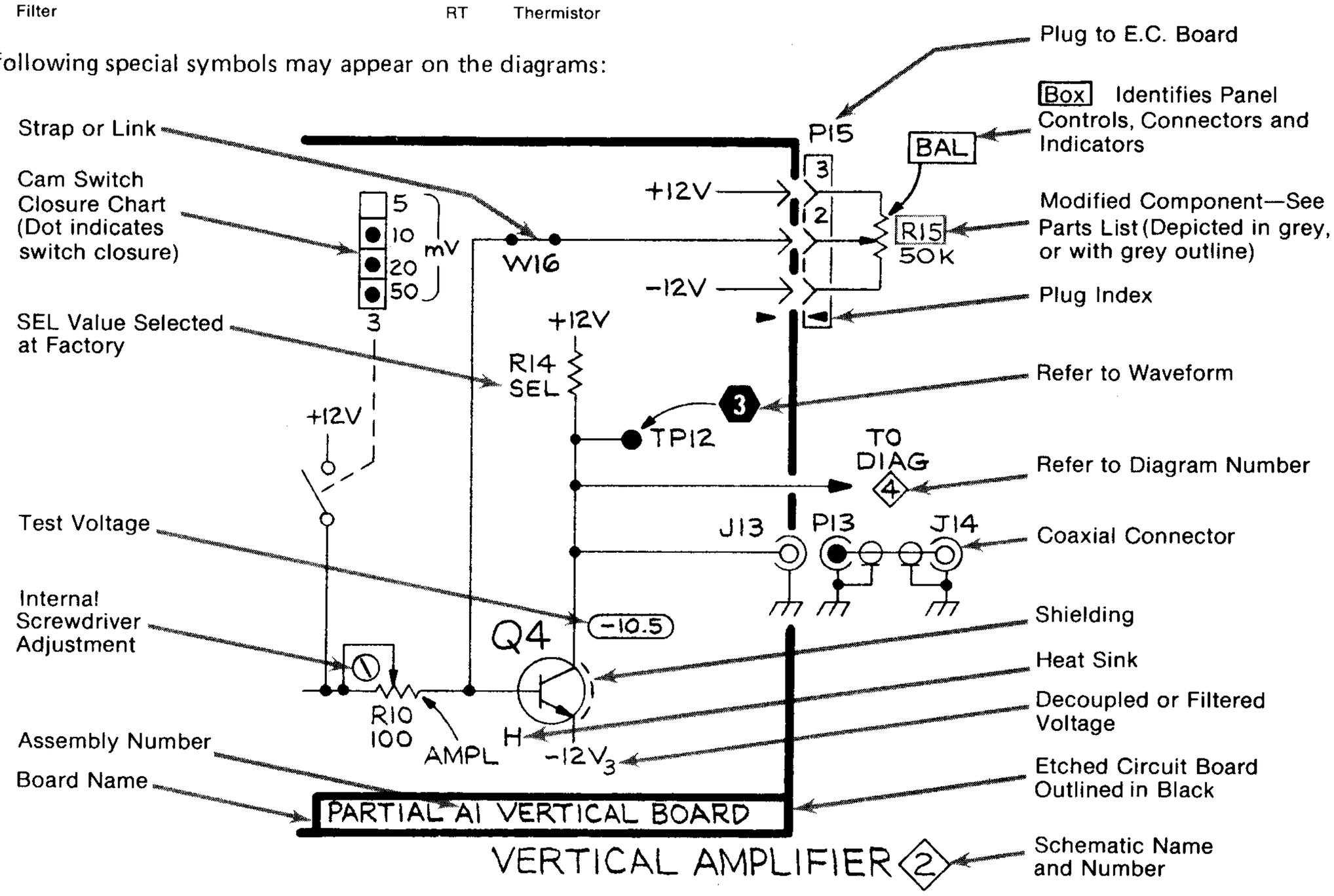

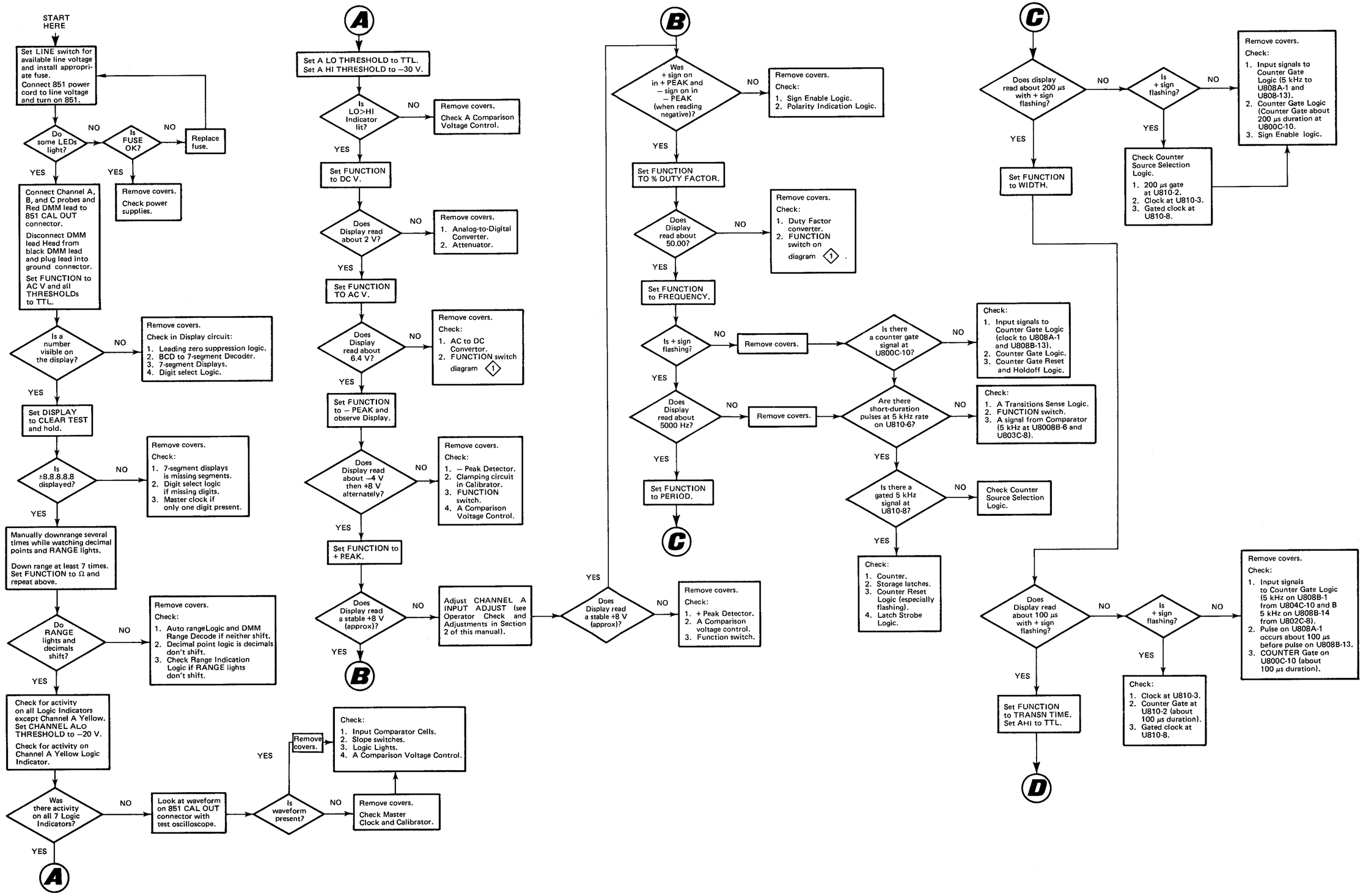

Figure 9-2. Troubleshooting tree – part 1.

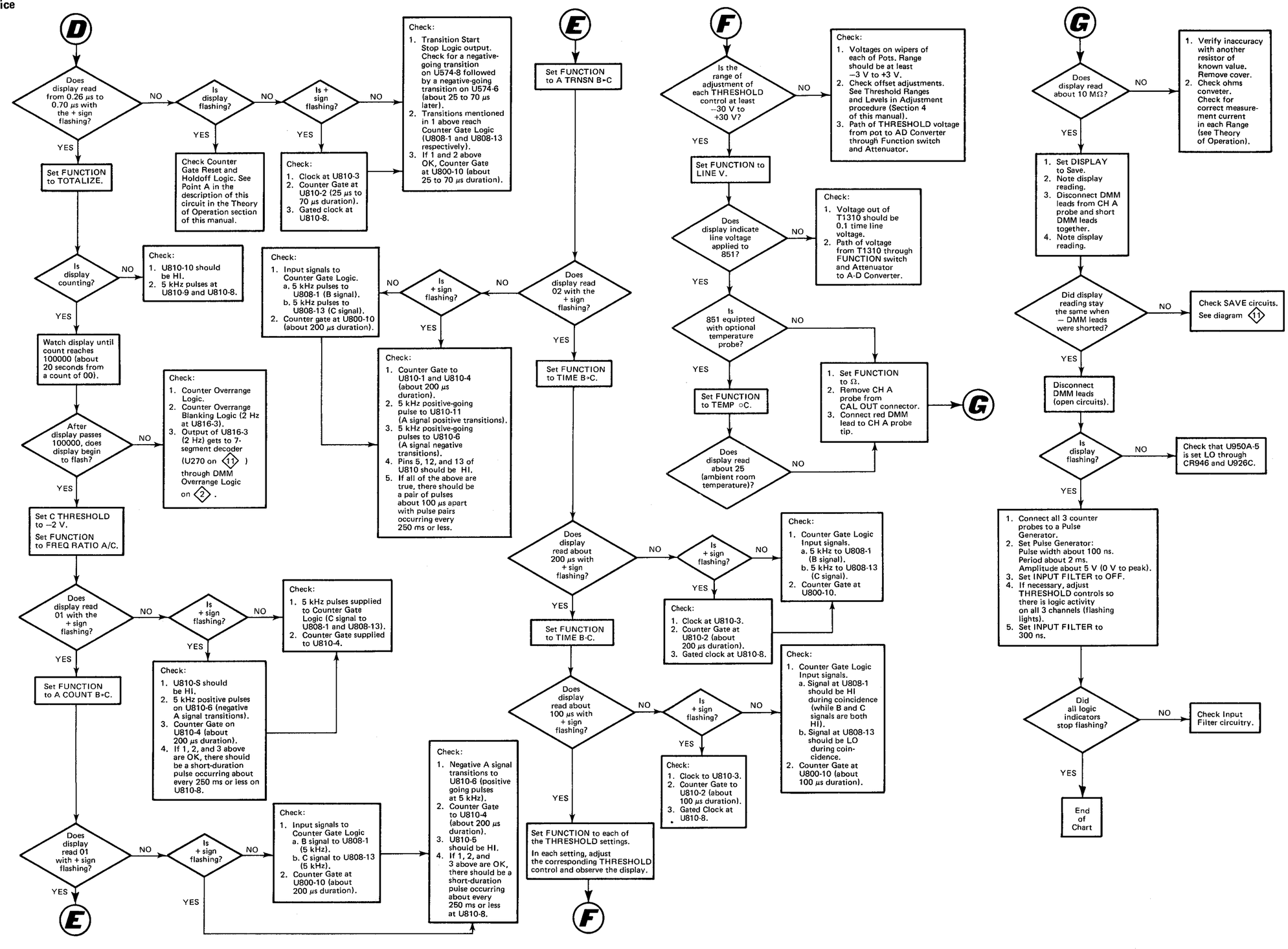

Figure 9-4. Troubleshooting tree — part 2.

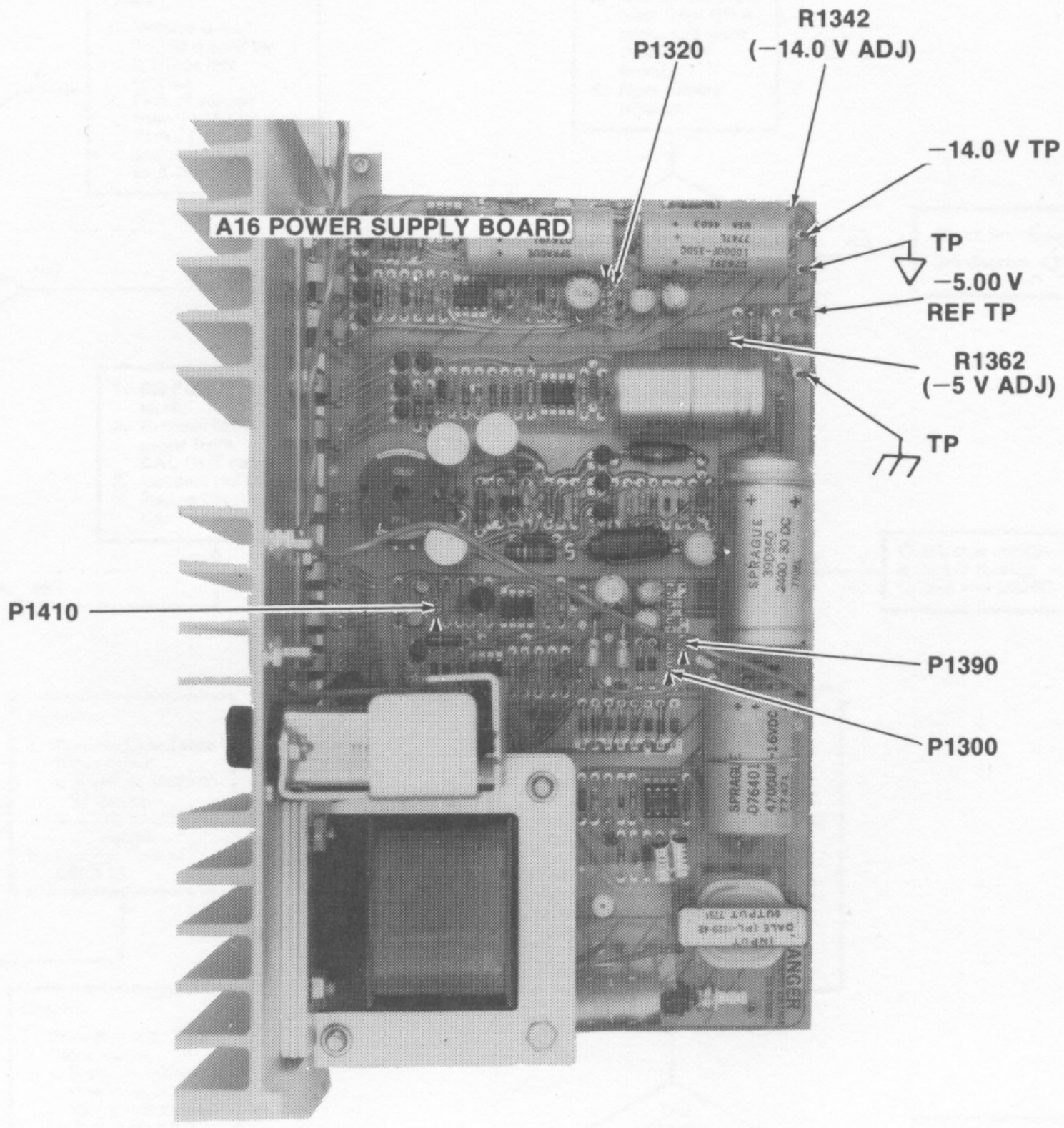

*THROUGH SHIELD
WHEN BOARD IS
INSTALLED

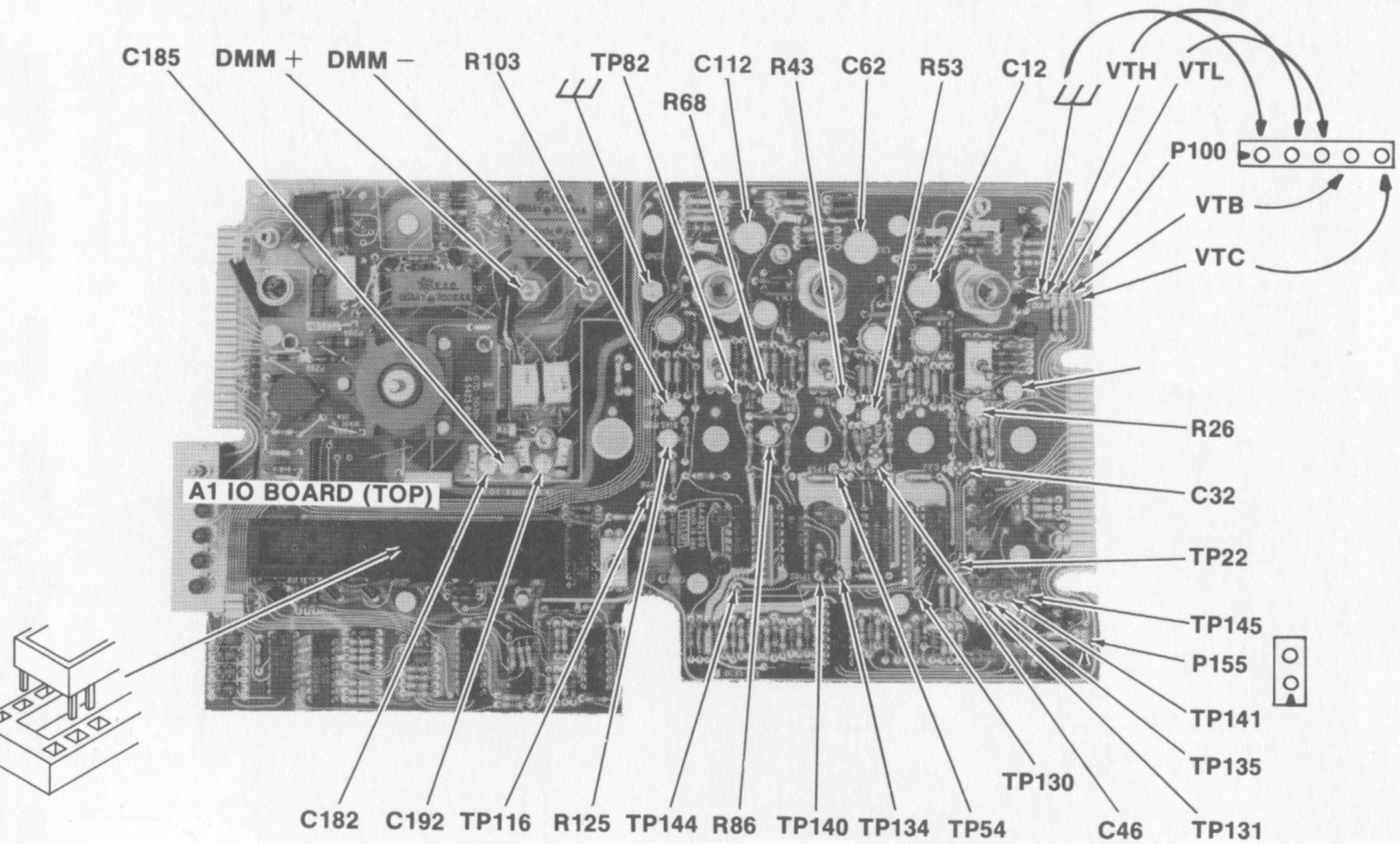

NOTE BLANK HOLES AT EACH END OF ARRAY

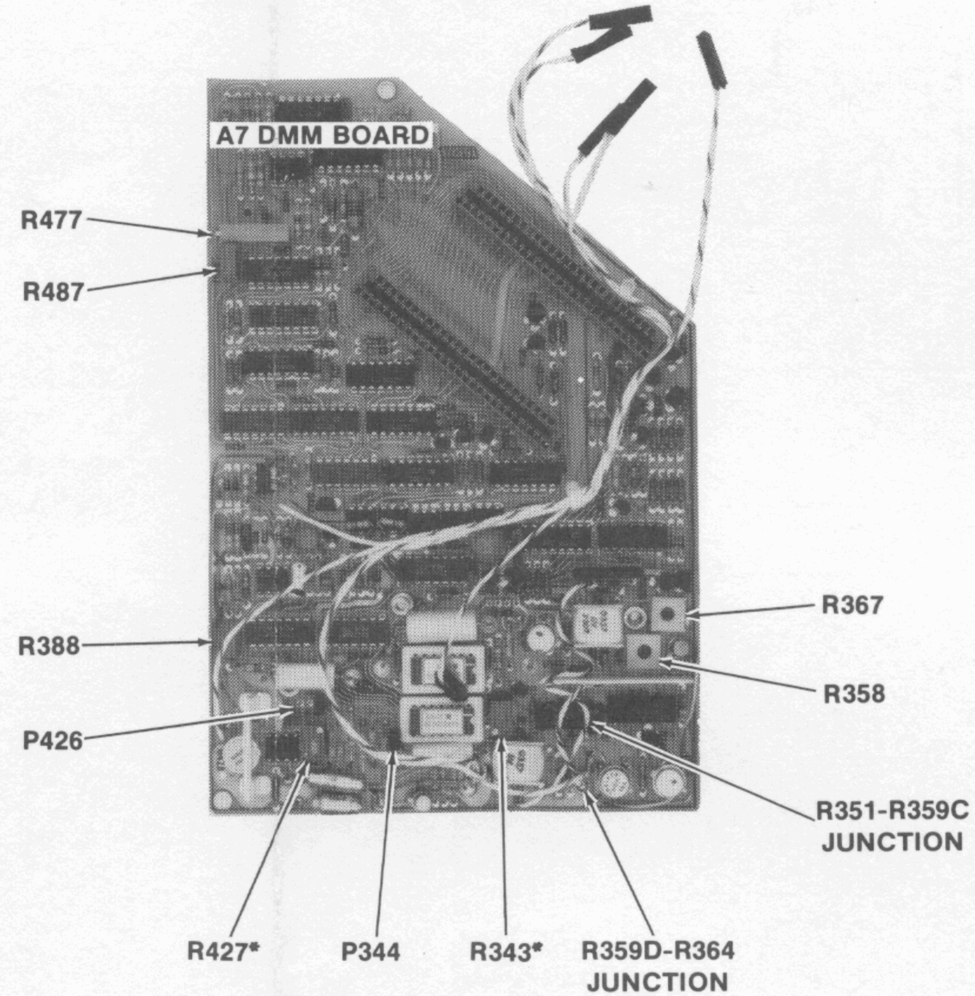

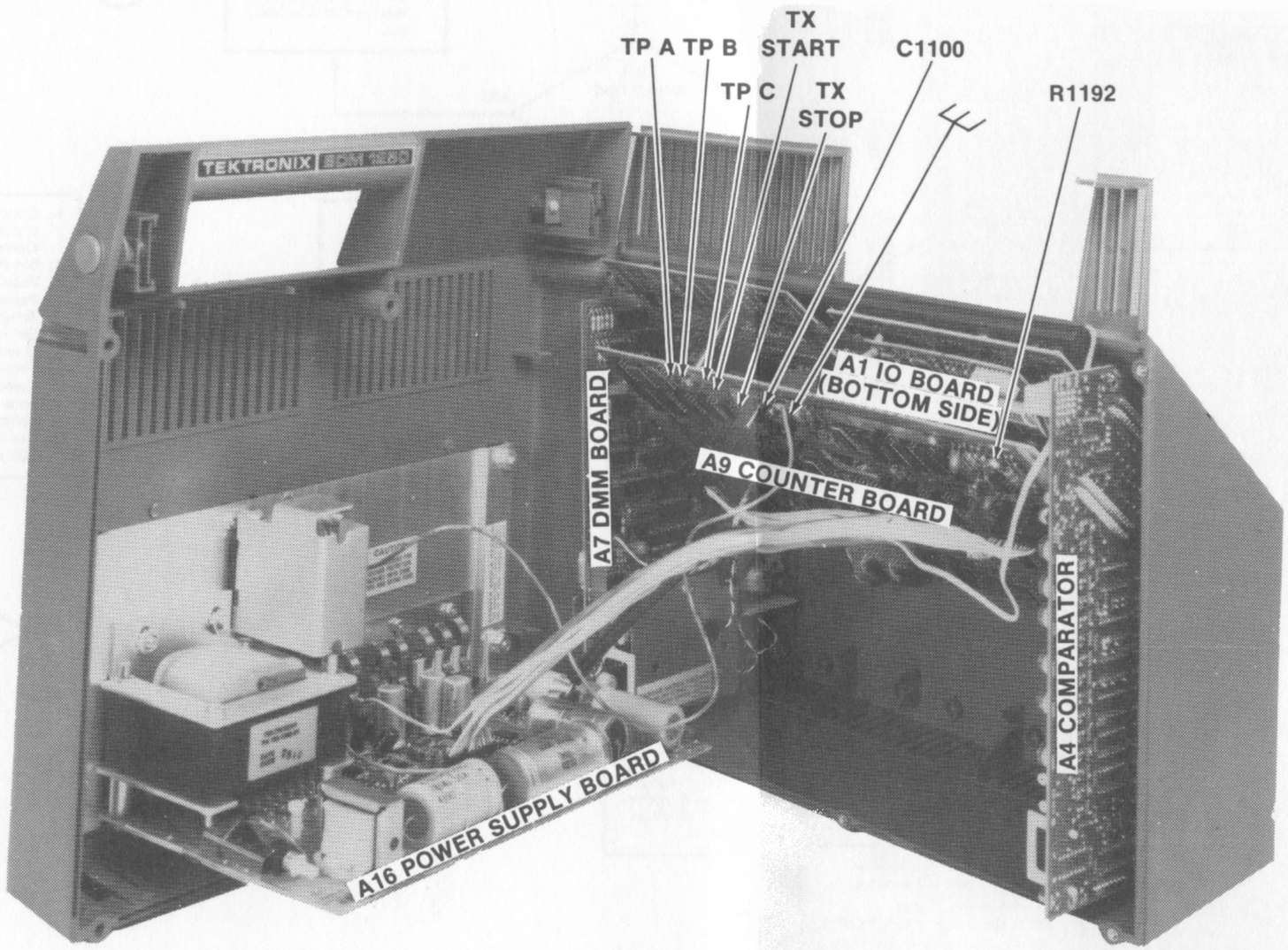

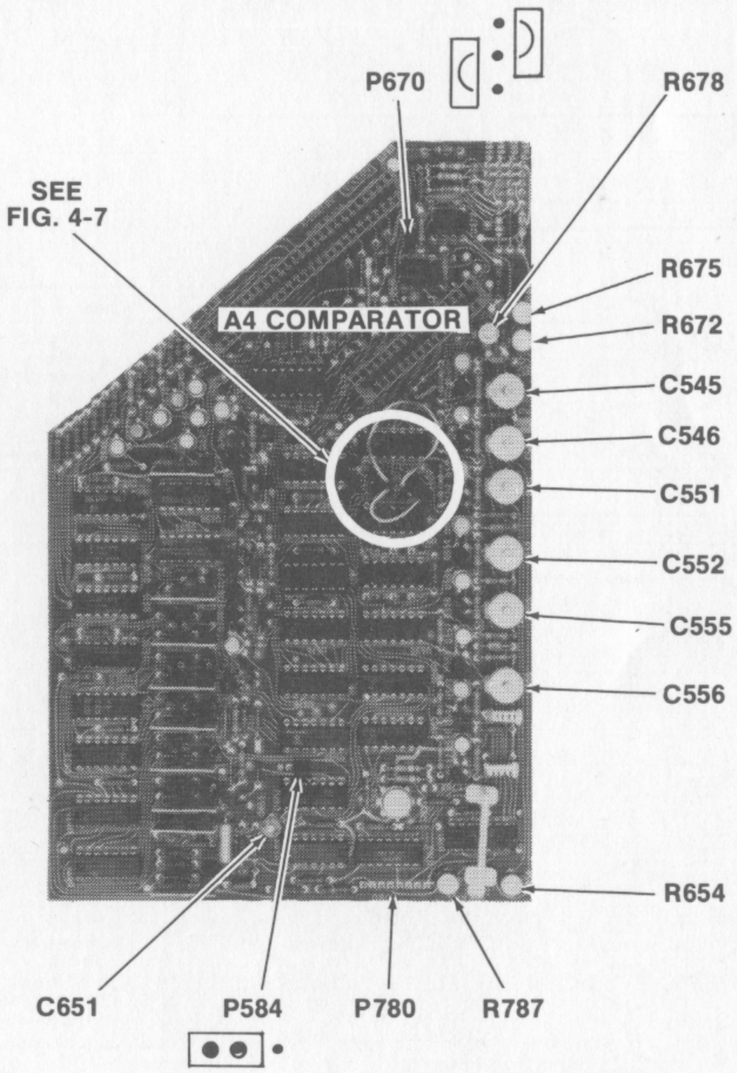

Figure 9-3. Adjustment locations.

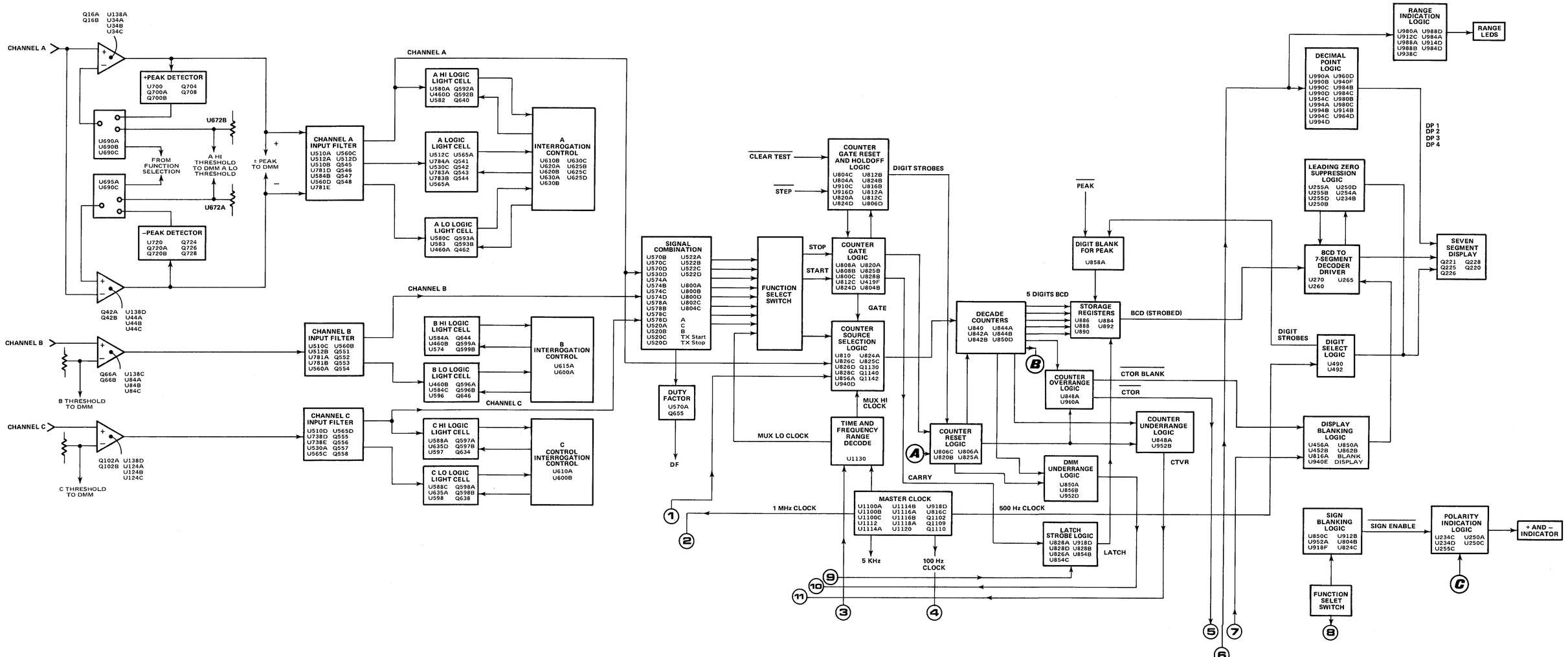

BLOCK DIAGRAM PART 1

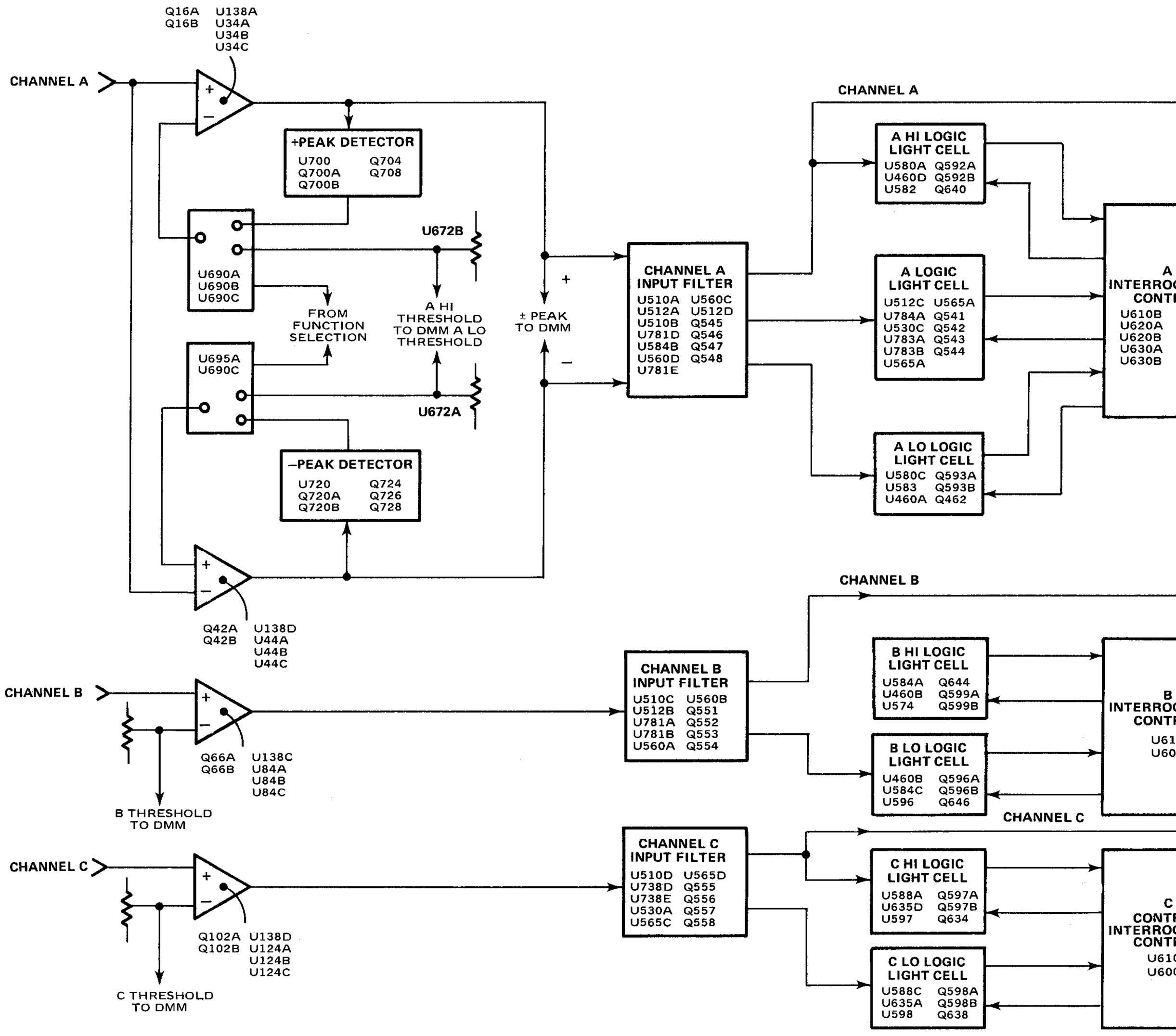
CHANNEL A
Q16A U138A
Q16B U34A
U34B
U34C
+PEAK DETECTOR
U700 Q704
Q700A Q708
Q700B
U690A
U690B
U690C
U672B
FROM FUNCTION SELECTION
A HI THRESHOLD TO DMM A LO THRESHOLD
± PEAK TO DMM
U695A
U690C
U672A
–PEAK DETECTOR
U720 Q724
Q720A Q726
Q720B Q728
Q42A U138D
Q42B U44A
U44B
U44C
CHANNEL A INPUT FILTER
U510A U560C
U512A U512D
U510B Q545
U781D Q546
U584B Q547
U560D Q548
U781E
CHANNEL A
A HI LOGIC LIGHT CELL
U580A Q592A
U460D Q592B
U582 Q640
A LOGIC LIGHT CELL
U512C U565A
U784A Q541
U530C Q542
U783A Q543
U783B Q544
U565A
A LO LOGIC LIGHT CELL
U580C Q593A
U583 Q593B
U460A Q462
CHANNEL B
CHANNEL B
Q66A U138C
Q66B U84A
U84B
U84C
B THRESHOLD TO DMM
CHANNEL B INPUT FILTER
U510C U560B
U512B Q551
U781A Q552
U781B Q553
U560A Q554
B HI LOGIC LIGHT CELL
U584A Q644
U460B Q599A
U574 Q599B
B LO LOGIC LIGHT CELL
U460B Q596A
U584C Q596B
U596 Q646
CHANNEL C
CHANNEL C
Q102A U138D
Q102B U124A
U124B
U124C
C THRESHOLD TO DMM
CHANNEL C INPUT FILTER
U510D U565D
U738D Q555
U738E Q556
U530A Q557
U565C Q558
C HI LOGIC LIGHT CELL
U588A Q597A
U635D Q597B
U597 Q634
C LO LOGIC LIGHT CELL
U588C Q598A
U635A Q598B
U598 Q638

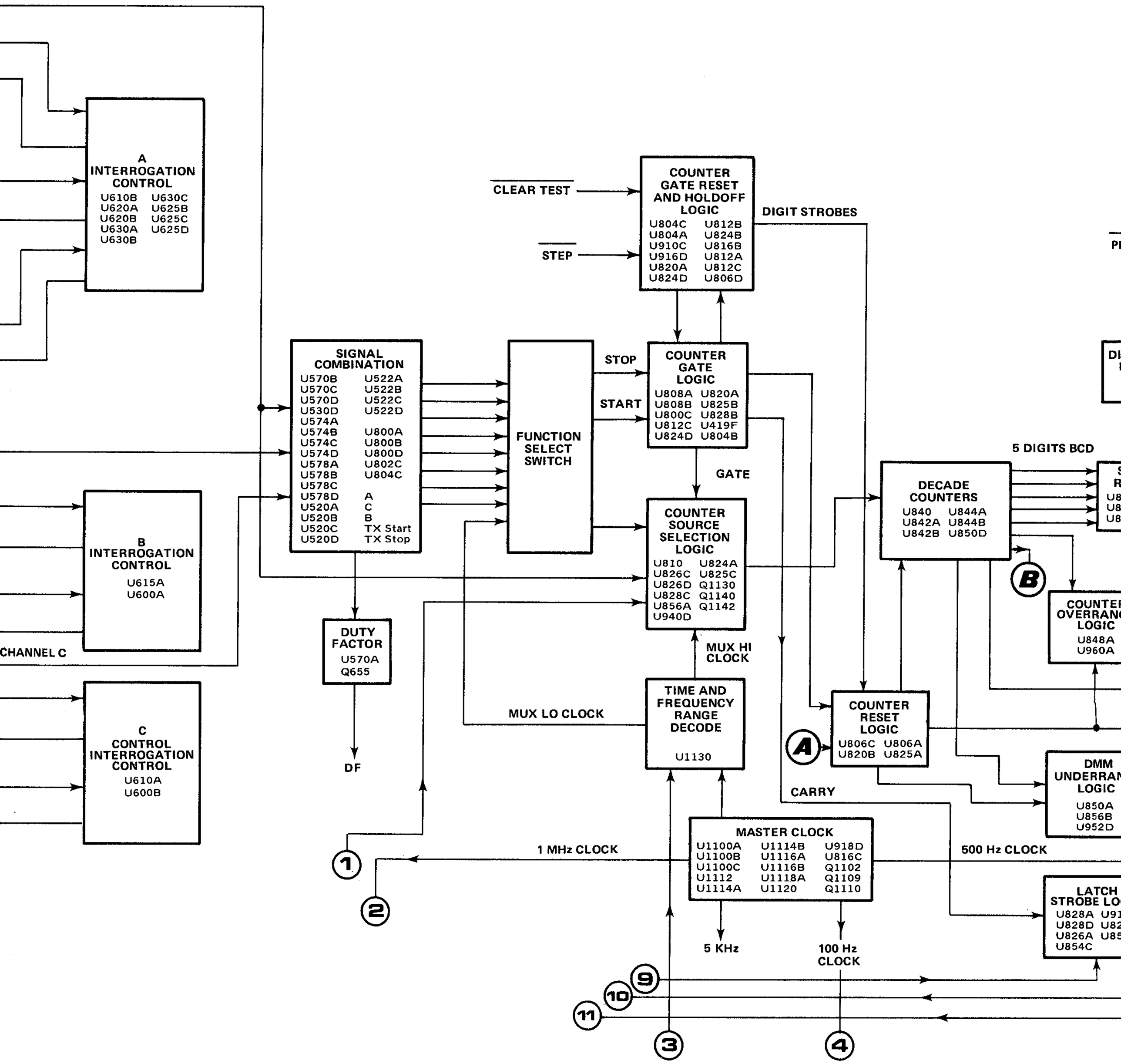
A
INTERROGATION
CONTROL
U610B U630C
U620A U625B
U620B U625C
U630A U625D
U630B
B
INTERROGATION
CONTROL
U615A
U600A
CHANNEL C
C
CONTROL
INTERROGATION
CONTROL
U610A
U600B
SIGNAL
COMBINATION
U570B U522A
U570C U522B
U570D U522C
U530D U522D
U574A
U574B U800A
U574C U800B
U574D U800D
U578A U802C
U578B U804C
U578C
U578D A
U520A C
U520B B
U520C TX Start
U520D TX Stop
DUTY
FACTOR
U570A
Q655
DF
FUNCTION
SELECT
SWITCH
CLEAR TEST
STEP
COUNTER
GATE RESET
AND HOLDOFF
LOGIC
U804C U812B
U804A U824B
U910C U816B
U916D U812A
U820A U812C
U824D U806D
DIGIT STROBES
STOP
START
COUNTER
GATE
LOGIC
U808A U820A
U808B U825B
U800C U828B
U812C U419F
U824D U804B
GATE
COUNTER
SOURCE
SELECTION
LOGIC
U810 U824A
U826C U825C
U826D Q1130
U828C Q1140
U856A Q1142
U940D
MUX HI
CLOCK
MUX LO CLOCK
TIME AND
FREQUENCY
RANGE
DECODE
U1130
5 DIGITS BCD
DECADE
COUNTERS
U840 U844A
U842A U844B
U842B U850D
B
COUNTER
OVERRANG
LOGIC
U848A
U960A
A
COUNTER
RESET
LOGIC
U806C U806A
U820B U825A
CARRY
DMM
UNDERRAN
LOGIC
U850A
U856B
U952D
MASTER CLOCK
U1100A U1114B U918D
U1100B U1116A U816C
U1100C U1116B Q1102
U1112 U1118A Q1109
U1114A U1120 Q1110
1 MHz CLOCK
500 Hz CLOCK
5 KHz
100 Hz
CLOCK
LATCH
STROBE LO
U828A U91
U828D U82
U826A U85
U854C
1
2
3
4
9
10
11

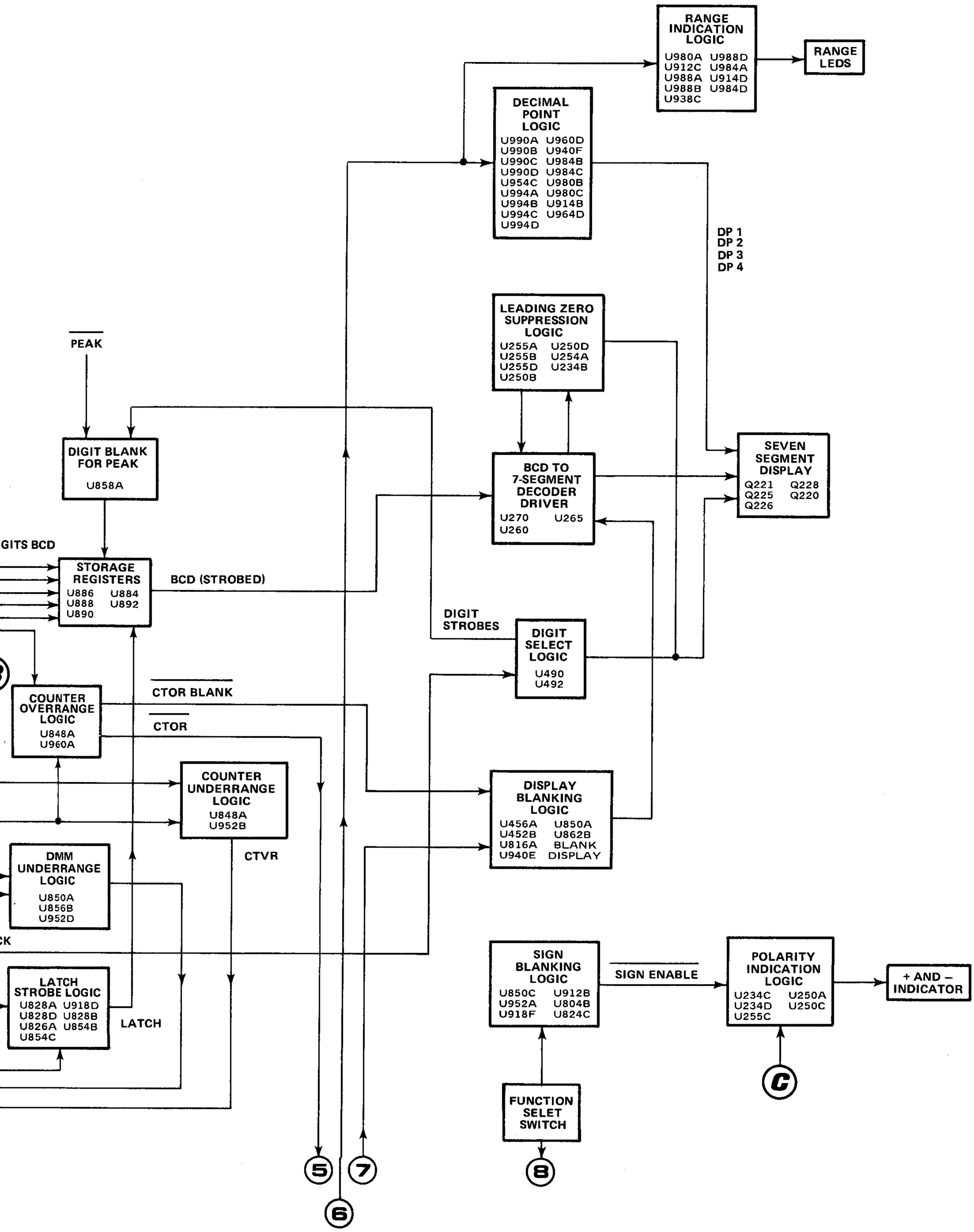

BLOCK DIAGRAM PART 1

2192-65

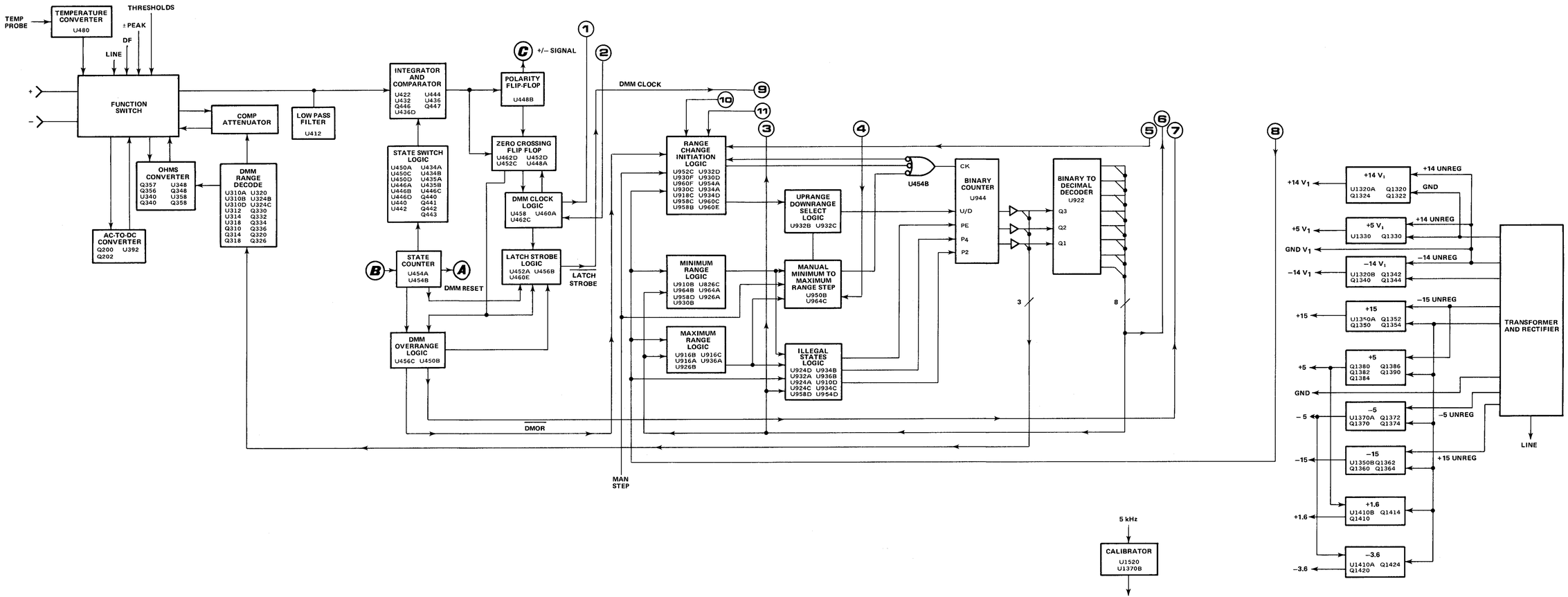

BLOCK DIAGRAM PART 2

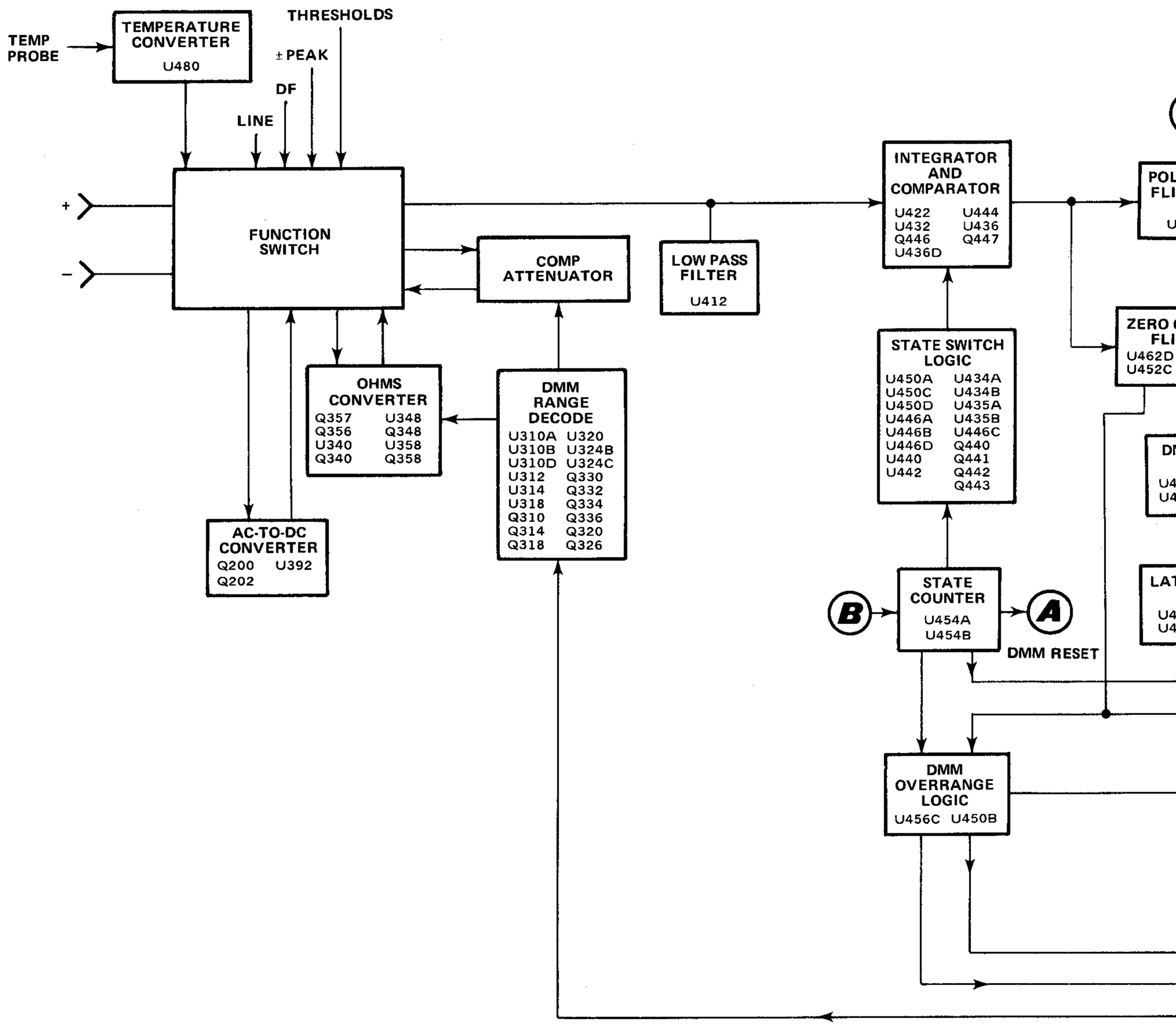
TEMP PROBE
TEMPERATURE CONVERTER
U480
THRESHOLDS
± PEAK
DF
LINE
+
−
FUNCTION SWITCH
COMP ATTENUATOR
LOW PASS FILTER
U412
INTEGRATOR AND COMPARATOR
U422 U444
U432 U436
Q446 Q447
U436D
OHMS CONVERTER
Q357 U348
Q356 Q348
U340 U358
Q340 Q358
DMM RANGE DECODE
U310A U320
U310B U324B
U310D U324C
U312 Q330
U314 Q332
U318 Q334
Q310 Q336
Q314 Q320
Q318 Q326
AC-TO-DC CONVERTER
Q200 U392
Q202
STATE SWITCH LOGIC
U450A U434A
U450C U434B
U450D U435A
U446A U435B
U446B U446C
U446D Q440
U440 Q441
U442 Q442
Q443
STATE COUNTER
U454A
U454B
B
A
DMM RESET
DMM OVERRANGE LOGIC
U456C U450B

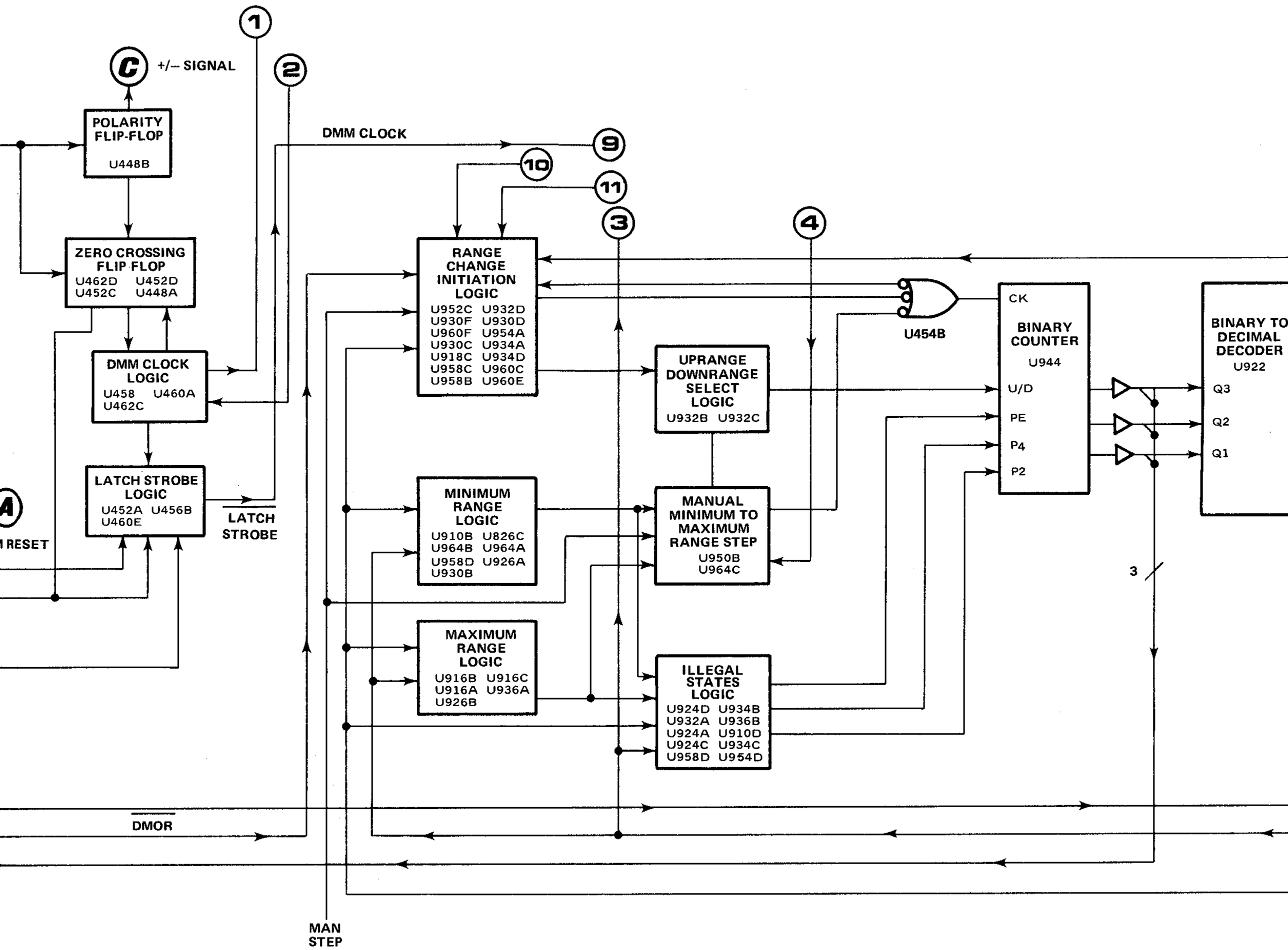
1
C
+/– SIGNAL
2
POLARITY FLIP-FLOP
U448B
DMM CLOCK
9
10
11
3
4
ZERO CROSSING FLIP FLOP
U462D U452D
U452C U448A
RANGE CHANGE INITIATION LOGIC
U952C U932D
U930F U930D
U960F U954A
U930C U934A
U918C U934D
U958C U960C
U958B U960E
U454B
CK
BINARY COUNTER
U944
U/D
PE
P4
P2
BINARY TO DECIMAL DECODER
U922
Q3
Q2
Q1
DMM CLOCK LOGIC
U458 U460A
U462C
UPRANGE DOWNRANGE SELECT LOGIC
U932B U932C
LATCH STROBE LOGIC
U452A U456B
U460E
4
M RESET
LATCH STROBE
MINIMUM RANGE LOGIC
U910B U826C
U964B U964A
U958D U926A
U930B
MANUAL MINIMUM TO MAXIMUM RANGE STEP
U950B
U964C
3
MAXIMUM RANGE LOGIC
U916B U916C
U916A U936A
U926B
ILLEGAL STATES LOGIC
U924D U934B
U932A U936B
U924A U910D
U924C U934C
U958D U954D
DMOR
MAN STEP

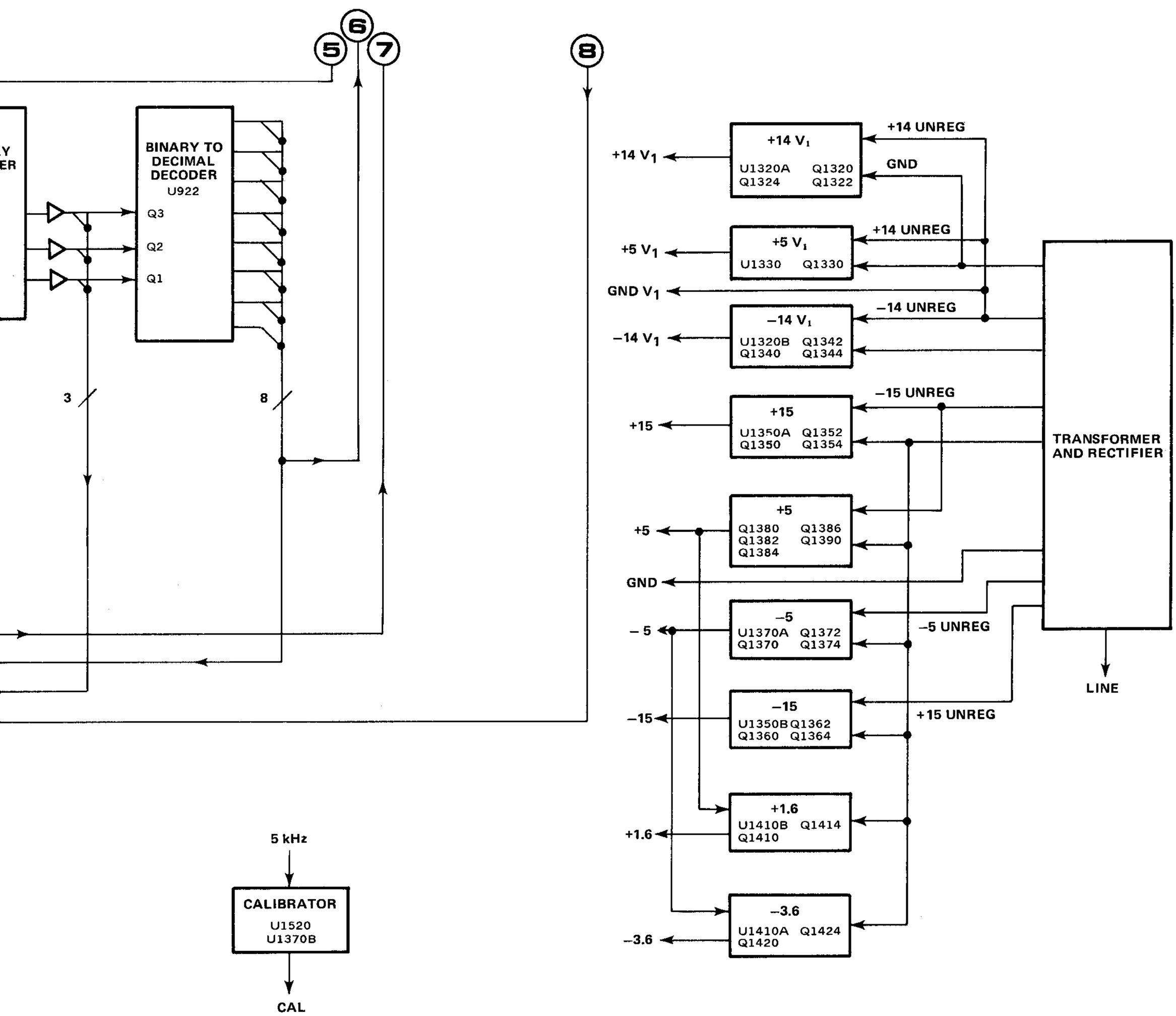

BLOCK DIAGRAM PART 2

2192-64

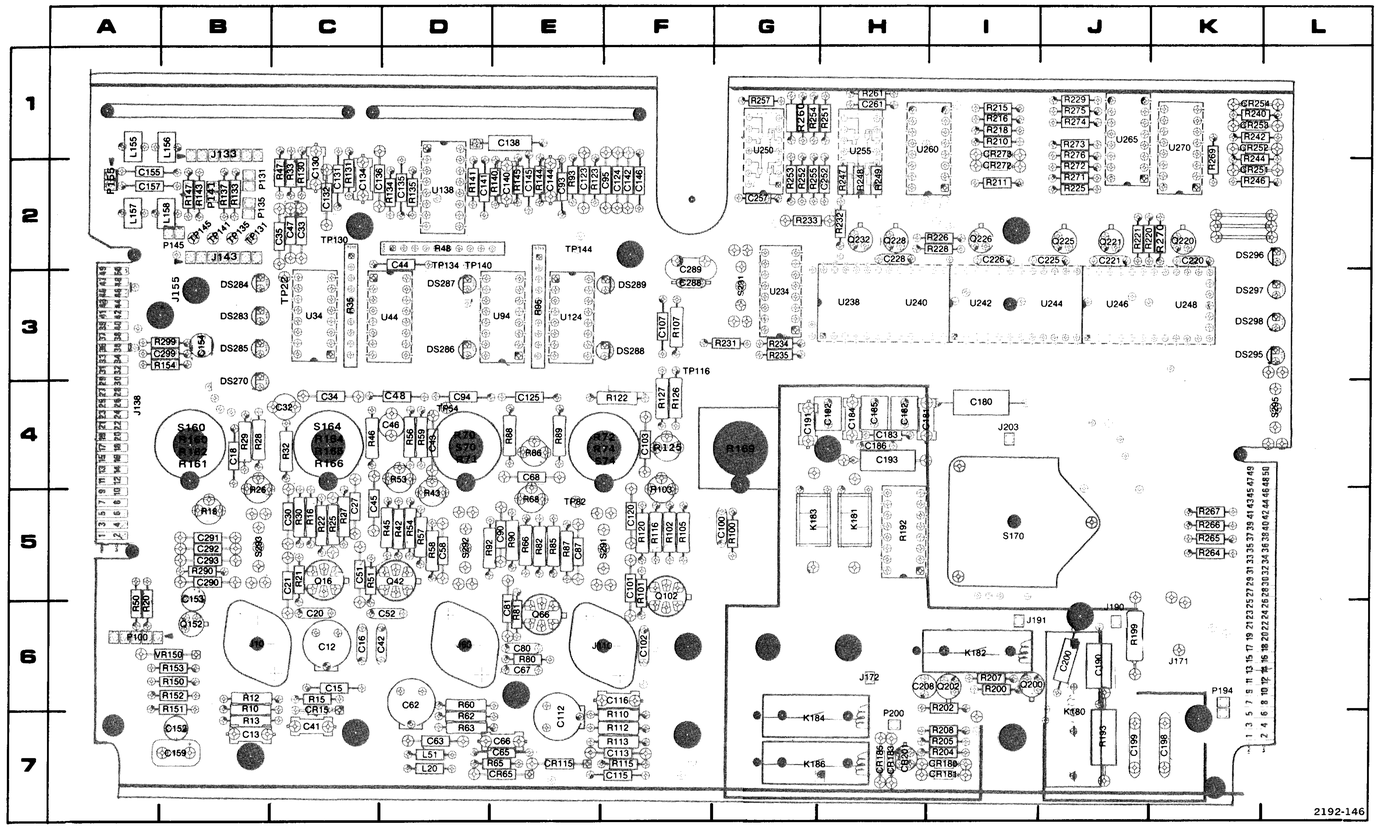

Figure 9-5. A1 IO board component locations.

CKT NO	GRID LOC	CKT NO	GRID LOC	CKT NO	GRID LOC	CKT NO	GRID LOC	CKT NO	GRID LOC
C12	6C	C192	4H	P100	6A	R95	3E	R254	1G
C13	7B	C193	4H	P131	2B	R100	5G	R255	2G
C15	6C	C198	7K	P135	2B	R101	5F	R257	1G
C16	6C	C199†	7J	P141	2B	R102	5F	R258	1G
C18	4B	C200	6J	P145	2B	R103	5F	R260	1G
C20	6C	C208	6H	P155	2A	R105	5F	R261	1H
C21	5C	C220	2K	P194	6K	R107	3F	R264	5K
C27*	5C	C221	2J	P200	7H	R110	7F	R265	5K
C30	5C	C225	2J			R112	7F	R266	5K
C32	4C	C226	2I	Q16	5C	R113	7F	R267	5K
C33	2C	C228	2H	Q42	5D	R115	7F	R269	1K
C34	4C	C252	2H	Q66	6E	R116	5F	R270	2K
C35	2C	C257	2G	Q102	5F	R120	5F	R271	2J
C41	7C	C261	1H	Q152	6B	R122	4F	R272	2J
C42	6D	C288	3F	Q200	6I	R123	2E	R273	1J
C43	4D	C289	3F	Q202	6I	R125	4F	R274	1J
C44	2D	C290	5B	Q220	2K	R126	4F	R275	1J
C45	5C	C291	5B	Q221	2J	R127	4F	R276	1J
C46	4D	C292	5B	Q225	2J	R130	2C	R290	5B
C47	2C	C293	5B	Q226	2I	R131	2C	R299	3B
C48	4D	C299	3B	Q228	2H	R133	2B		
C51	5C			Q232	2H	R134	2D	S70‡	4D
C52	6D	CR15	6C			R135	2D	S74‡	4F
C58	5D	CR65	7E	R10	6B	R137	2B	S160‡	4B
C62	6D	CR115	7E	R12	6B	R140	2E	S164‡	4C
C63	7D	CR180	7I	R13	7B	R141	2D	S231	3G
C65	7E	CR181	7I	R15	6C	R143	2B	S291	5F
C66	7E	CR183	7H	R16	5C	R144	2E	S292	5D
C67	6E	CR185	7H	R18	5B	R145	2E	S293	5B
C68	4E	CR201	7H	R20	6A	R147	2B		
C80	6E	CR251	2K	R21	5C	R150	6B	TP22	3C
C81	6E	CR252	1K	R22	5C	R151	6B	TP54	4D
C87	5E	CR253	1K	R25	5C	R152	6B	TP82	5E
C90	5E	CR254	1K	R26	5B	R153	6B	TP116	3F
C93	2E	CR272	2I	R27	5C	R154	3B	TP130	2C
C94	4D	CR273	1I	R28	4B	R160‡	4B	TP131	2B
C95	2F			R29	4B	R161‡	4B	TP134	2D
C100	5G	DS270	4B	R30	5C	R162‡	4B	TP135	2B
C101	5F	DS283	3B	R32	4C	R164‡	4C	TP140	2D
C102	6F	DS284	3B	R33	2C	R165‡	4C	TP141	2B
C103	4F	DS285	3B	R35	3C	R166‡	4C	TP144	2E
C107	3F	DS286	3D	R42	5D	R169	4G	TP145	2B
C112	7E	DS287	3D	R43	5D	R192	5H		
C113	7F	DS288	3F	R45	5D	R193	7J	U34	3C
C115	7F	DS289	3F	R46	4C	R199	6J	U44	3D
C116	6F	DS295	3K	R47	2C	R200	6I	U94	3E
C120	5F	DS296	2K	R48	2D	R202	6I	U124	3E
C123	2E	DS297	3K	R50	6A	R204	7I	U138	2D
C124	2F	DS298	3K	R51	5C	R205	7I	U234	3G
C125	4E			R53	4D	R207	6I	U238	3H
C130	2C	J10	6B	R54	5D	R208	7I	U240	3H
C131	2C	J60	6D	R56	4D	R210	1I	U242	3I
C132	2C	J110	6E	R57	5D	R211	2I	U244	3J
C134	2C	J133	1B	R58	5D	R215	1I	U246	3J
C135	2D	J138	4A	R59	4D	R216	1I	U248	3K
C136	2C	J143	2B	R60	6D	R218	1I	U250	1G
C138	1E	J155	2A	R62	7D	R220	2J	U255	1H
C140	2E	J171	6K	R63	7D	R221	2J	U260	1I
C141	2D	J172	6H	R65	7E	R225	2J	U265	1J
C142	2F	J190	6J	R66	5E	R226	2I	U270	1K
C144	2E	J191	6I	R68	5E	R228	2I		
C145	2E	J203	4I	R70‡	4D	R229	1J	VR150	6B
C146	2F			R71‡	4D	R231	3G		
C152	7B	K180†	7J	R72‡	4F	R232	2H		
C153	5B	K181	5H	R74‡	4F	R233	2G		
C154	3B	K182	6I	R80	6E	R234	3G		
C155	2A	K183	5G	R81	6E	R235	3G		
C157	2A	K184	7H	R82	5E	R240	1K		
C159	7B	K186	7H	R85	5E	R242	1K		
C180	4I			R86	4E	R244	1K		
C181	4I	L20	7D	R87	5E	R246	2K		
C182	4H	L51	7D	R88	4E	R247*	2H		
C183	4H	L155	1A	R89	4E	R248*	2H		
C184	4H	L156	1B	R90	5E	R249*	2H		
C185	4H	L157	2A	R92	5D	R251	1H		
C186	4H	L158	2B	R93	2E	R252	2G		
C190	6J					R253	2G		
C191	4G								

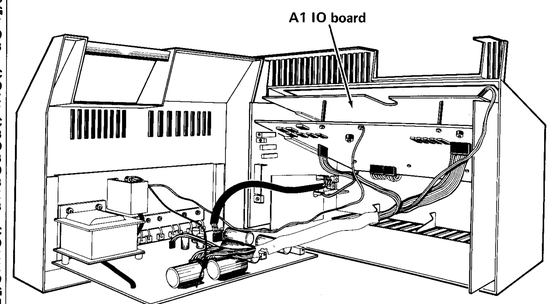

*See Parts List for serial number ranges.

†Located on back of board.

‡Part of potentiometer assembly.

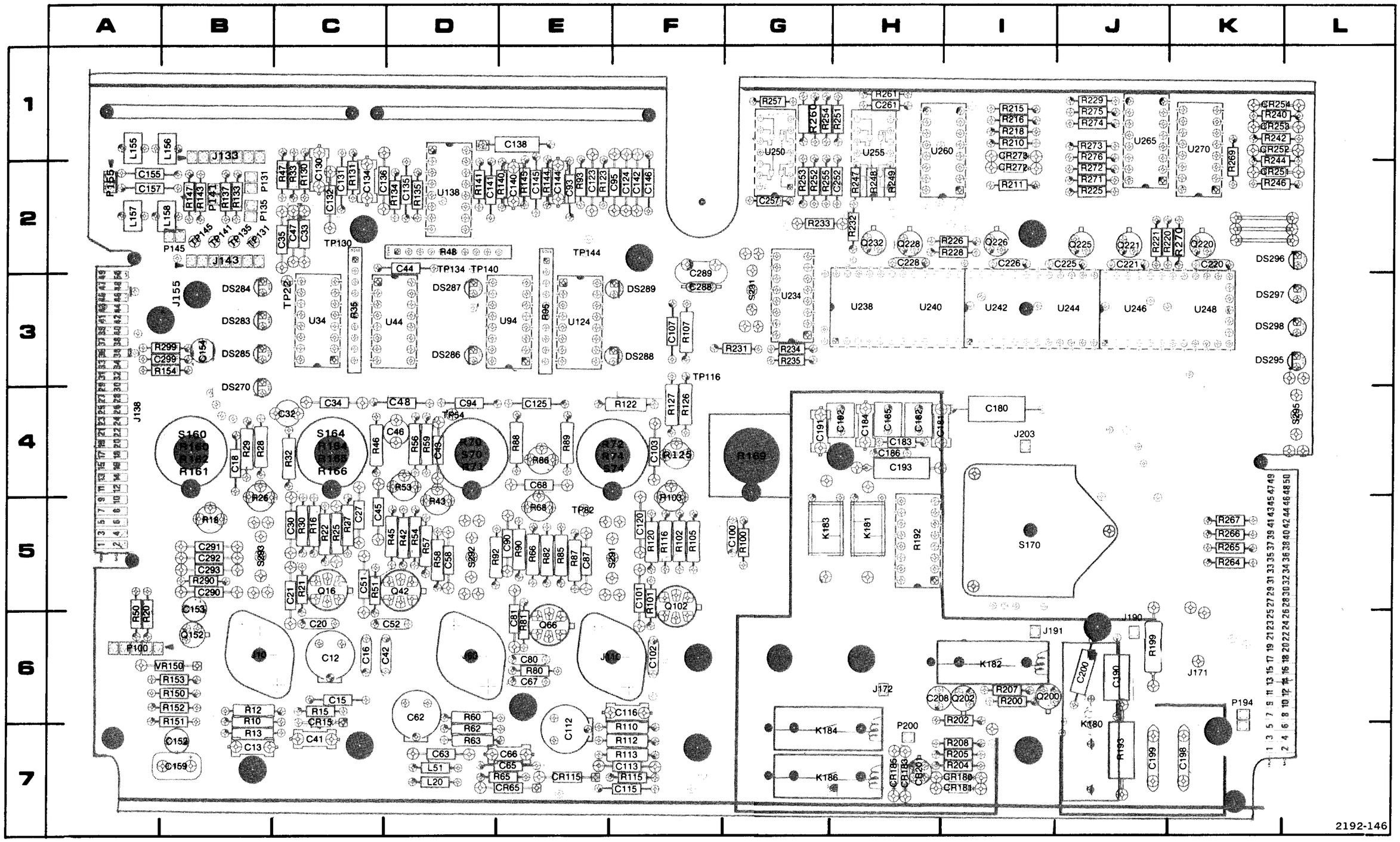

Figure 9-5. A1 IO board component locations.

CKT NO	GRID LOC	CKT NO	GRID LOC	CKT NO	GRID LOC	CKT NO	GRID LOC	CKT NO	GRID LOC
C12	6C	C192	4H	P100	6A	R95	3E	R254	1G
C13	7B	C193	4H	P131	2B	R100	5G	R255	2G
C15	6C	C198	7K	P135	2B	R101	5F	R257	1G
C16	6C	C199†	7J	P141	2B	R102	5F	R258	1G
C18	4B	C200	6J	P145	2B	R103	5F	R260	1G
C20	6C	C208	6H	P155	2A	R105	5F	R261	1H
C21	5C	C220	2K	P194	6K	R107	3F	R264	5K
C27*	5C	C221	2J	P200	7H	R110	7F	R265	5K
C30	5C	C225	2J			R112	7F	R266	5K
C32	4C	C226	2I	Q16	5C	R113	7F	R267	5K
C33	2C	C228	2H	Q42	5D	R115	7F	R269	1K
C34	4C	C252	2H	Q66	6E	R116	5F	R270	2K
C35	2C	C257	2G	Q102	5F	R120	5F	R271	2J
C41	7C	C261	1H	Q152	6B	R122	4F	R272	2J
C42	6D	C288	3F	Q200	6I	R123	2E	R273	1J
C43	4D	C289	3F	Q202	6I	R125	4F	R274	1J
C44	2D	C290	5B	Q220	2K	R126	4F	R275	1J
C45	5C	C291	5B	Q221	2J	R127	4F	R276	1J
C46	4D	C292	5B	Q225	2J	R130	2C	R290	5B
C47	2C	C293	5B	Q226	2I	R131	2C	R299	3B
C48	4D	C299	3B	Q228	2H	R133	2B		
C51	5C			Q232	2H	R134	2D	S70‡	4D
C52	6D	CR15	6C			R135	2D	S74‡	4F
C58	5D	CR65	7E	R10	6B	R137	2B	S160‡	4B
C62	6D	CR115	7E	R12	6B	R140	2E	S164‡	4C
C63	7D	CR180	7I	R13	7B	R141	2D	S231	3G
C65	7E	CR181	7I	R15	6C	R143	2B	S291	5F
C66	7E	CR183	7H	R16	5C	R144	2E	S292	5D
C67	6E	CR185	7H	R18	5B	R145	2E	S293	5B
C68	4E	CR201	7H	R20	6A	R147	2B		
C80	6E	CR251	2K	R21	5C	R150	6B	TP22	3C
C81	6E	CR252	1K	R22	5C	R151	6B	TP54	4D
C87	5E	CR253	1K	R25	5C	R152	6B	TP82	5E
C90	5E	CR254	1K	R26	5B	R153	6B	TP116	3F
C93	2E	CR272	2I	R27	5C	R154	3B	TP130	2C
C94	4D	CR273	1I	R28	4B	R160‡	4B	TP131	2B
C95	2F			R29	4B	R161‡	4B	TP134	2D
C100	5G	DS270	4B	R30	5C	R162‡	4B	TP135	2B
C101	5F	DS283	3B	R32	4C	R164‡	4C	TP140	2D
C102	6F	DS284	3B	R33	2C	R165‡	4C	TP141	2B
C103	4F	DS285	3B	R35	3C	R166‡	4C	TP144	2E
C107	3F	DS286	3D	R42	5D	R169	4G	TP145	2B
C112	7E	DS287	3D	R43	5D	R192	5H		
C113	7F	DS288	3F	R45	5D	R193	7J	U34	3C
C115	7F	DS289	3F	R46	4C	R199	6J	U44	3D
C116	6F	DS295	3K	R47	2C	R200	6I	U94	3E
C120	5F	DS296	2K	R48	2D	R202	6I	U124	3E
C123	2E	DS297	3K	R50	6A	R204	7I	U138	2D
C124	2F	DS298	3K	R51	5C	R205	7I	U234	3G
C125	4E			R53	4D	R207	6I	U238	3H
C130	2C	J10	6B	R54	5D	R208	7I	U240	3H
C131	2C	J60	6D	R56	4D	R210	1I	U242	3I
C132	2C	J110	6E	R57	5D	R211	2I	U244	3J
C134	2C	J133	1B	R58	5D	R215	1I	U246	3J
C135	2D	J138	4A	R59	4D	R216	1I	U248	3K
C136	2C	J143	2B	R60	6D	R218	1I	U250	1G
C138	1E	J155	2A	R62	7D	R220	2J	U255	1H
C140	2E	J171	6K	R63	7D	R221	2J	U260	1I
C141	2D	J172	6H	R65	7E	R225	2J	U265	1J
C142	2F	J190	6J	R66	5E	R226	2I	U270	1K
C144	2E	J191	6I	R68	5E	R228	2I		
C145	2E	J203	4I	R70‡	4D	R229	1J	VR150	6B
C146	2F			R71‡	4D	R231	3G		
C152	7B	K180†	7J	R72‡	4F	R232	2H		
C153	5B	K181	5H	R74‡	4F	R233	2G		
C154	3B	K182	6I	R80	6E	R234	3G		
C155	2A	K183	5G	R81	6E	R235	3G		
C157	2A	K184	7H	R82	5E	R240	1K		
C159	7B	K186	7H	R85	5E	R242	1K		
C180	4I			R86	4E	R244	1K		
C181	4I	L20	7D	R87	5E	R246	2K		
C182	4H	L51	7D	R88	4E	R247*	2H		
C183	4H	L155	1A	R89	4E	R248*	2H		
C184	4H	L156	1B	R90	5E	R249*	2H		
C185	4H	L157	2A	R92	5D	R251	1H		
C186	4H	L158	2B	R93	2E	R252	2G		
C190	6J					R253	2G		
C191	4G								

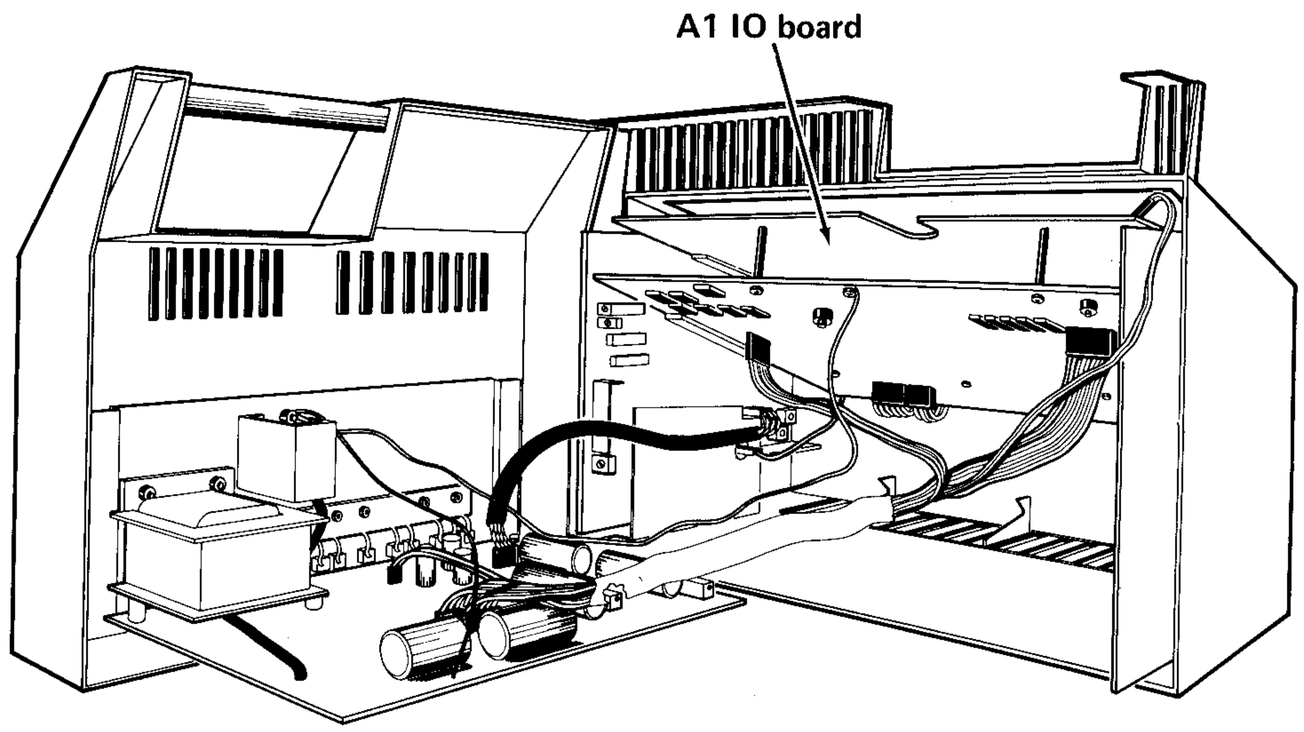

*See Parts List for serial number ranges.

†Located on back of board.

‡Part of potentiometer assembly.

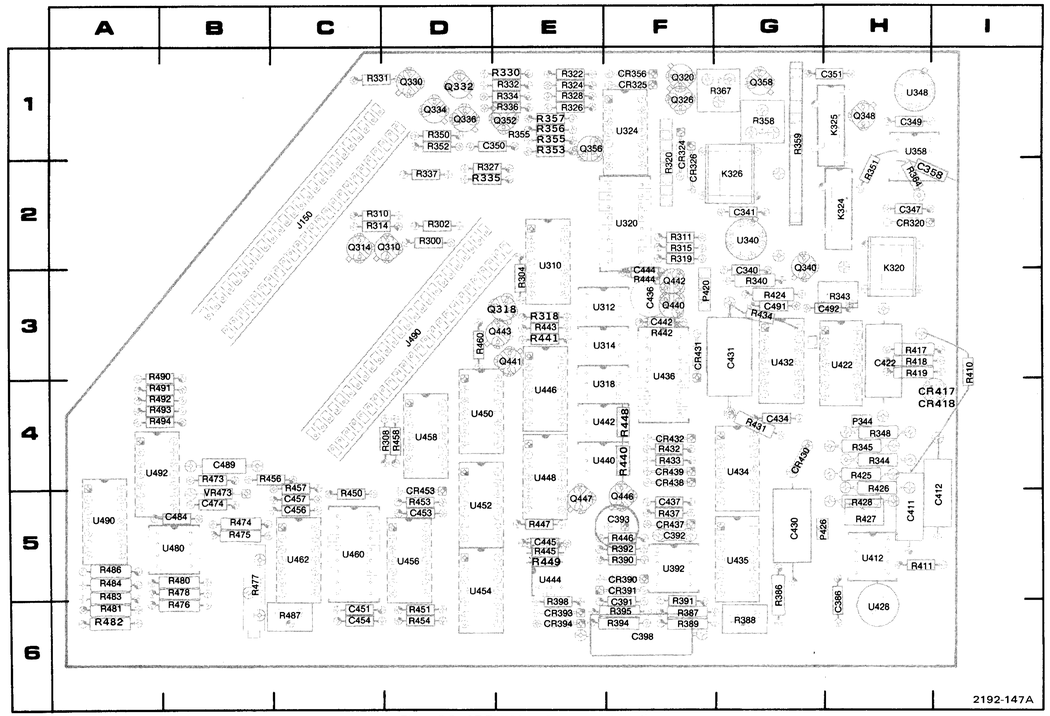

Figure 9-6. A7 DMM board component locations.

CKT NO	GRID LOC
R493	4B
R494	4B
U310	3E
U312	3F
U314	3F
U318	4F
U320	2F
U324	1F
U340	2G
U348	1H
U358	2H
U392	5F
U412	5H
U422	3H
U428	6H
U432	3G
U434	4G
U435	5G
U436	4F
U440	4F
U442	4F
U444	5E
U446	4E
U448	4E
U450	4D
U452	5D
U454	5D
U456	5D
U458	4D
U460	5C
U462	5C
U480	5B
U490	5A
U492	4B
VR473	5B

CKT NO	GRID LOC	CKT NO	GRID LOC	CKT NO	GRID LOC	CKT NO	GRID LOC	CKT NO	GRID LOC	CKT NO	GRID LOC	CKT NO	GRID LOC	CKT NO	GRID LOC	CKT NO	GRID LOC	CKT NO	GRID LOC	CKT NO	GRID LOC
C340	3G	C434	4G	CR320	2H	CR453	5D	Q310	2D	Q443	3E	R326	1E	R352	1D	R395	6F	R440*	4F	R460*	3D
C341	2G	C436	3F	CR324	1F			Q314	2C	Q446	5F	R327	2D	R353	1E	R398	6E	R441	3E	R473	4B
C347	2H	C437	5F	CR325	1F	J150	2C	Q318	3E	Q447	5E	R328	1E	R355	1E	R410	3I	R442*	3F	R474	5B
C349	1H	C442*	3F	CR326	2F	J490	3D	Q320	1F			R330	1E	R356	1E	R411	5I	R443	3E	R475	5B
C350	1E	C444*	3F	CR356	1F			Q326	1F	R300*	2D	R331	1C	R357	1E	R417	3H	R444*	3F	R476	6B
C351	1H	C445*	5E	CR390	5F	K320	3H	Q330	1D	R302*	2D	R332	1E	R358	1G	R418	3H	R445*	5E	R477	5B
C358*	2H	C451	6C	CR391	5E	K324	2H	Q332	1D	R304*	3E	R334	1E	R359	1G	R419	3H	R446	5F	R478	5B
C386	6H	C453	5D	CR393	6E	K325	1H	Q334	1D	R308*	4D	R335	2D	R364	2H	R424	3G	R447	5E	R480	5B
C391	6F	C454	6C	CR394	6E	K326	2G	Q336	1D	R310	2C	R336	1E	R367	1G	R425	4H	R448*	4F	R481	6A
C392	5F	C456	5C	CR417*	4I			Q340	3G	R311	2F	R337	2D	R386	5G	R426	5H	R449*	5E	R482	6A
C393	5F	C457	5C	CR418*	4I	P344	4H	Q348	1H	R314	2C	R340	3G	R387	6F	R427	5H	R450	5C	R483	6A
C398	6F	C474	5B	CR430	4G	P420	3F	Q352	1E	R315	2F	R343	3H	R388	6G	R428	5H	R451	6D	R484	5A
C411	5H	C484	5B	CR431	3F	P426	5H	Q356	1E	R318	3E	R344	4H	R389	6F	R431	4G	R453	5D	R486	5A
C412	5I	C489	4B	CR432	4F			Q358	1G	R319	2F	R345	4H	R390	5F	R432	4F	R454	6D	R487	6C
C422	3H	C491	3G	CR437	5F			Q440	3F	R320	2F	R348	4H	R391	6F	R433	4F	R456	4C	R490	4B
C430	5G	C492	3H	CR438	4F			Q441	3E	R322	1E	R350	1D	R392	5F	R434	3G	R457	5C	R491	4B
C431	3G			CR439	4F			Q442	3F	R324	1E	R351	2H	R394	6F	R437	5F	R458	4D	R492	4B

*See Parts List for serial number ranges.

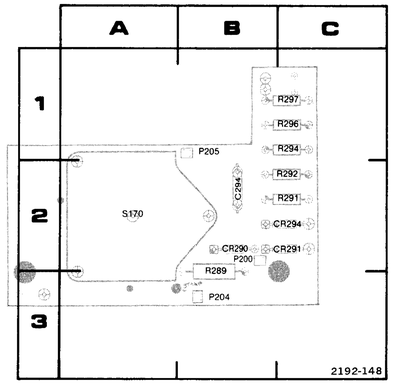

Figure 9-7. A11 Switch #1 board component locations.

CKT NO	GRID LOC
C294	2B
CR290	2B
CR291	2C
CR294	2C
P200	2B
P204	3B
P205	1B
R289	2B
R291	2C
R292	2C
R294	1C
R296	1C
R297	1C
S170	2A

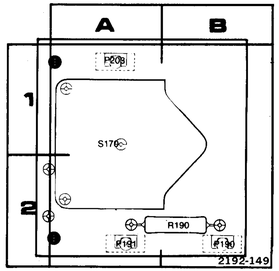

Figure 9-8. A12 Switch #2 board component locations.

CKT NO	GRID LOC
P190	2B
P191	2A
P203	1A
R190	2B
S170	1A

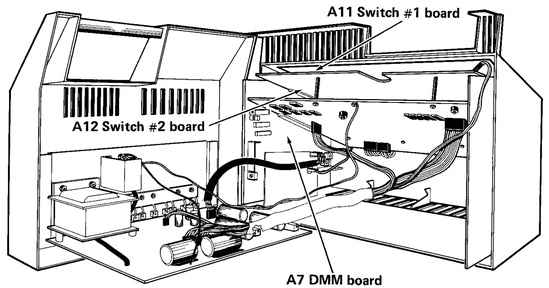

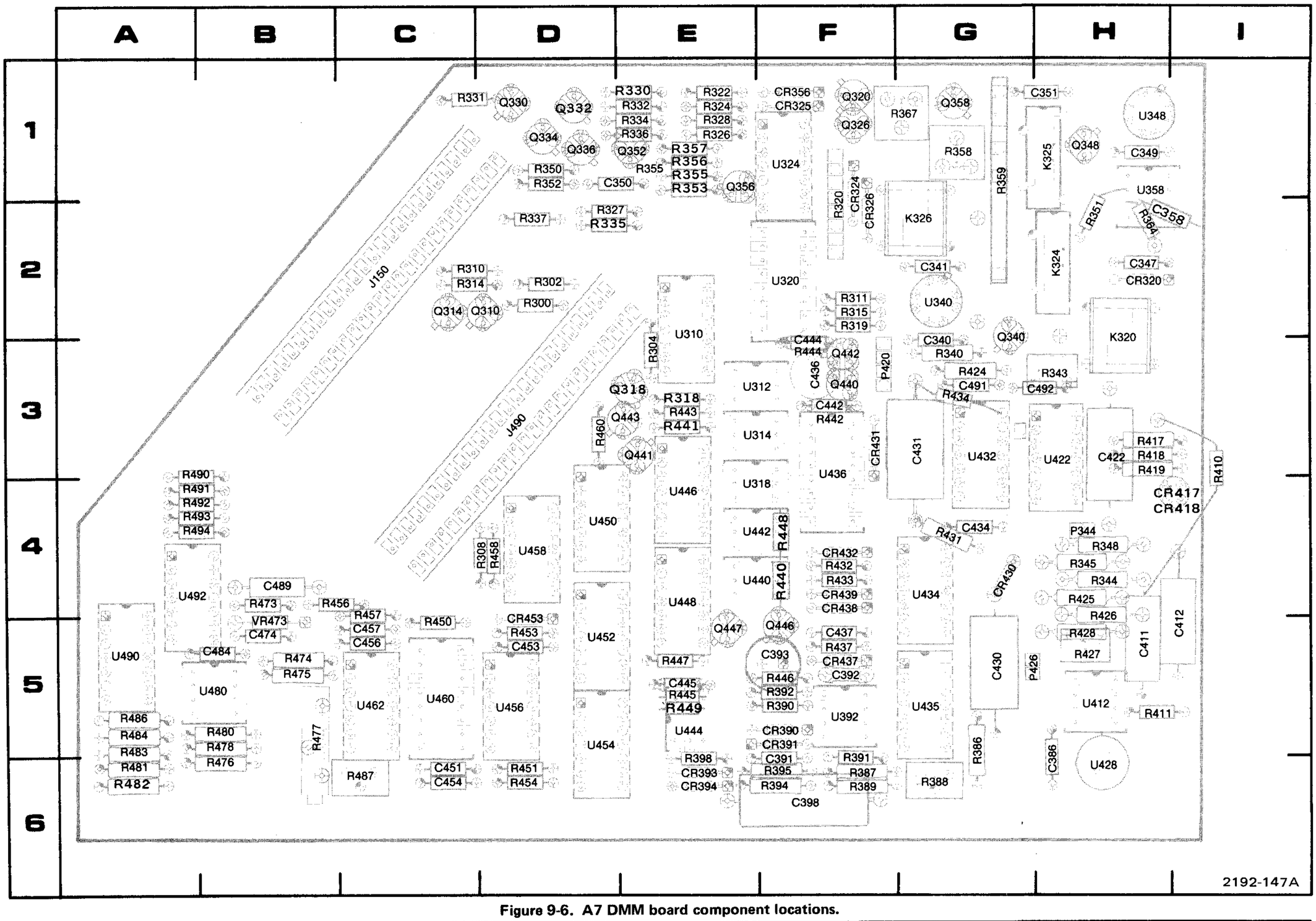

Figure 9-6. A7 DMM board component locations.

CKT NO	GRID LOC
R493	4B
R494	4B
U310	3E
U312	3F
U314	3F
U318	4F
U320	2F
U324	1F
U340	2G
U348	1H
U358	2H
U392	5F
U412	5H
U422	3H
U428	6H
U432	3G
U434	4G
U435	5G
U436	4F
U440	4F
U442	4F
U444	5E
U446	4E
U448	4E
U450	4D
U452	5D
U454	5D
U456	5D
U458	4D
U460	5C
U462	5C
U480	5B
U490	5A
U492	4B
VR473	5B

CKT NO	GRID LOC	CKT NO	GRID LOC	CKT NO	GRID LOC	CKT NO	GRID LOC	CKT NO	GRID LOC	CKT NO	GRID LOC	CKT NO	GRID LOC	CKT NO	GRID LOC	CKT NO	GRID LOC	CKT NO	GRID LOC	CKT NO	GRID LOC
C340	3G	C434	4G	CR320	2H	CR453	5D	Q310	2D	Q443	3E	R326	1E	R352	1D	R395	6F	R440*	4F	R460*	3D
C341	2G	C436	3F	CR324	1F			Q314	2C	Q446	5F	R327	2D	R353	1E	R398	6E	R441	3E	R473	4B
C347	2H	C437	5F	CR325	1F	J150	2C	Q318	3E	Q447	5E	R328	1E	R355	1E	R410	3I	R442*	3F	R474	5B
C349	1H	C442*	3F	CR326	2F	J490	3D	Q320	1F			R330	1E	R356	1E	R411	5I	R443	3E	R475	5B
C350	1E	C444*	3F	CR356	1F			Q326	1F	R300*	2D	R331	1C	R357	1E	R417	3H	R444*	3F	R476	6B
C351	1H	C445*	5E	CR390	5F	K320	3H	Q330	1D	R302*	2D	R332	1E	R358	1G	R418	3H	R445*	5E	R477	5B
C358*	2H	C451	6C	CR391	5F	K324	2H	Q332	1D	R304*	3E	R334	1E	R359	1G	R419	3H	R446	5F	R478	5B
C386	6H	C453	5D	CR393	6E	K325	1H	Q334	1D	R308*	4D	R335	2D	R364	2H	R424	3G	R447	5E	R480	5B
C391	6F	C454	6C	CR394	6E	K326	2G	Q336	1D	R310	2C	R336	1E	R367	1G	R425	4H	R448*	4F	R481	6A
C392	5F	C456	5C	CR417*	4I			Q340	3G	R311	2F	R337	2D	R386	5G	R426	5H	R449*	5E	R482	6A
C393	5F	C457	5C	CR418*	4I	P344	4H	Q348	1H	R314	2C	R340	3G	R387	6F	R427	5H	R450	5C	R483	6A
C398	6F	C474	5B	CR430	4G	P420	3F	Q352	1E	R315	2F	R343	3H	R388	6G	R428	5H	R451	6D	R484	5A
C411	5H	C484	5B	CR431	3F	P426	5H	Q356	1E	R318	3E	R344	4H	R389	6F	R431	4G	R453	5D	R486	5A
C412	5I	C489	4B	CR432	4F			Q358	1G	R319	2F	R345	4H	R390	5F	R432	4F	R454	6D	R487	6C
C422	3H	C491	3G	CR437	5F			Q440	3F	R320	2F	R348	4H	R391	6F	R433	4F	R456	4C	R490	4B
C430	5G	C492	3H	CR438	4F			Q441	3E	R322	1E	R350	1D	R392	5F	R434	3G	R457	5C	R491	4B
C431	3G			CR439	4F			Q442	3F	R324	1E	R351	2H	R394	6F	R437	5F	R458	4D	R492	4B

*See Parts List for serial number ranges.

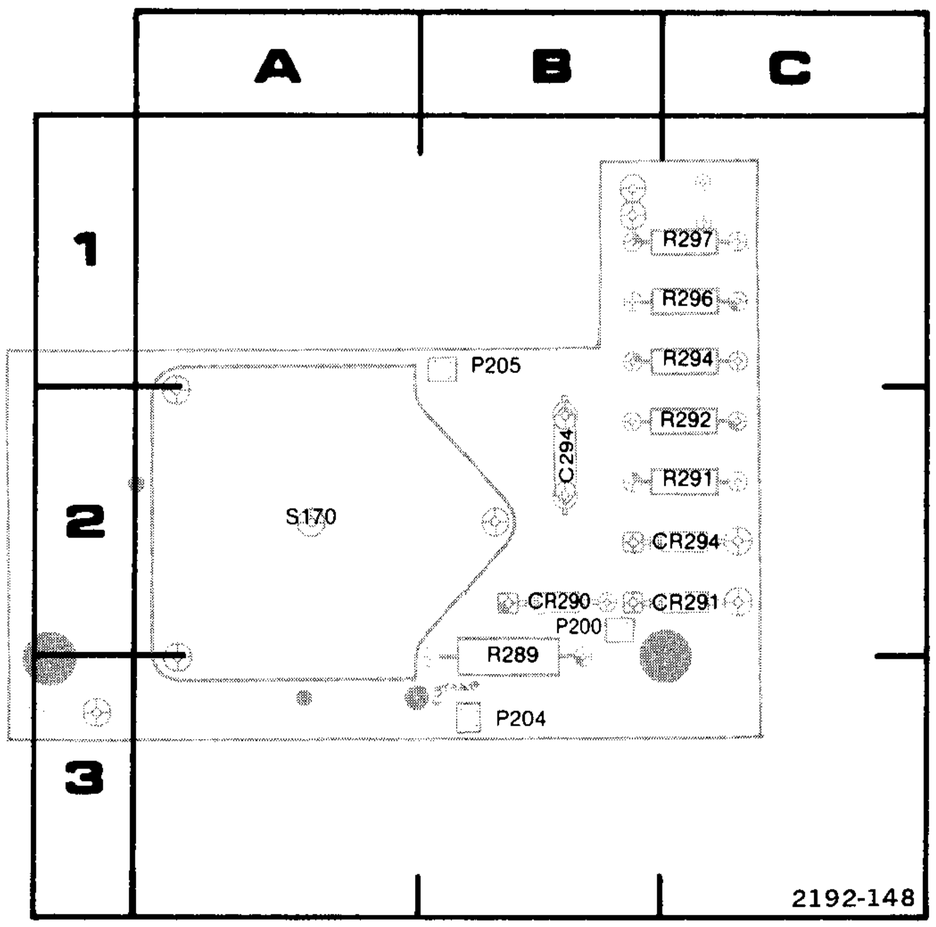

Figure 9-7. A11 Switch #1 board component locations.

CKT NO	GRID LOC
C294	2B
CR290	2B
CR291	2C
CR294	2C
P200	2B
P204	3B
P205	1B
R289	2B
R291	2C
R292	2C
R294	1C
R296	1C
R297	1C
S170	2A

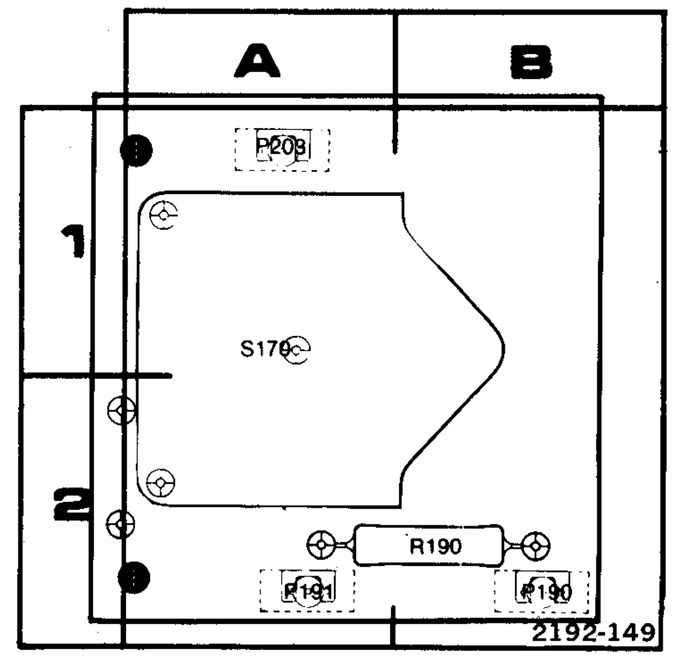

Figure 9-8. A12 Switch #2 board component locations.

CKT NO	GRID LOC
P190	2B
P191	2A
P203	1A
R190	2B
S170	1A

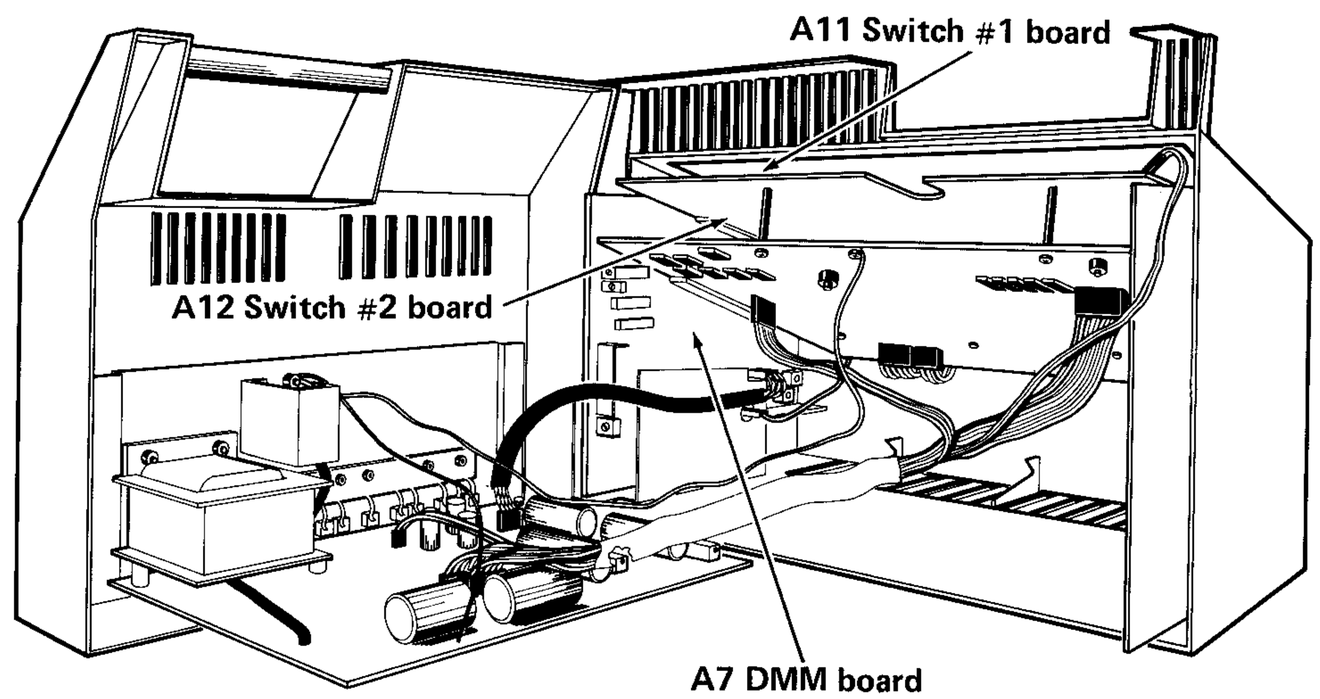

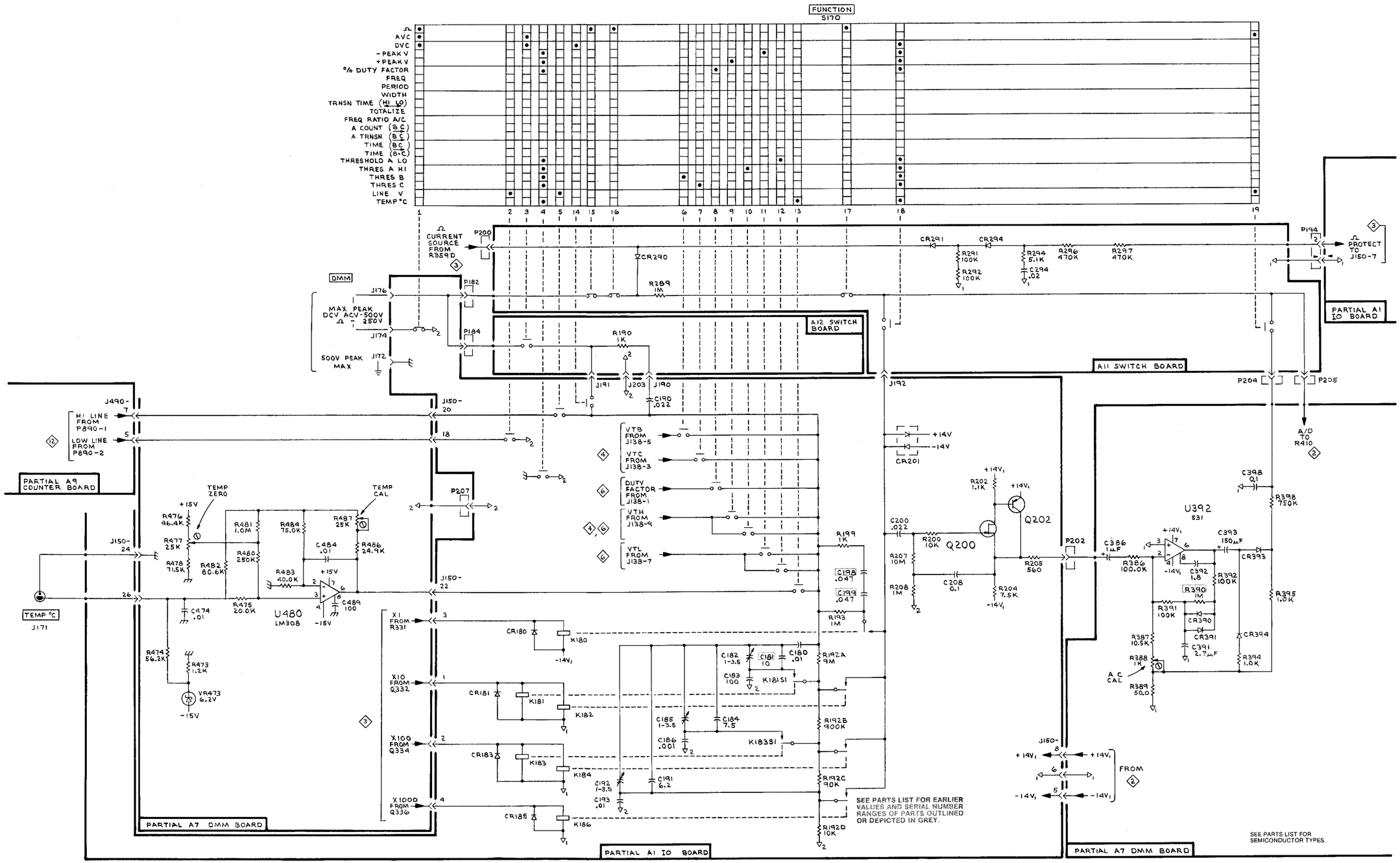

2192-125
REV A, OCT 1978

TEMPERATURE CONVERTOR
ACV CONVERTOR DMM ATTENUATOR

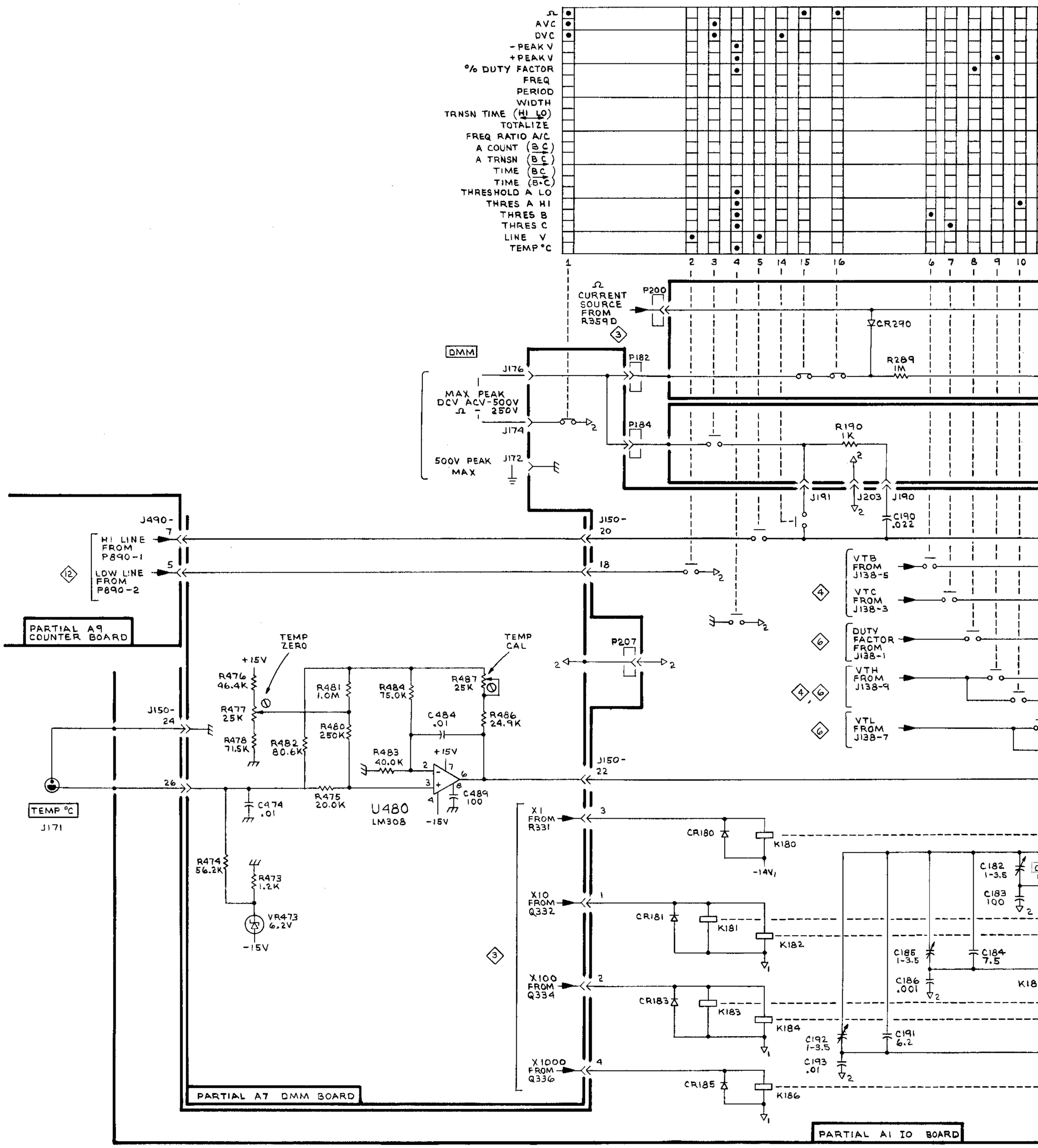
Ω
AVC
DVC
-PEAK V
+PEAK V
% DUTY FACTOR
FREQ
PERIOD
WIDTH
TRNSN TIME (HI LO)
TOTALIZE
FREQ RATIO A/C
A COUNT (B C)
A TRNSN (B C)
TIME (B C)
TIME (B-C)
THRESHOLD A LO
THRES A HI
THRES B
THRES C
LINE V
TEMP °C
Ω CURRENT SOURCE FROM R359D
P200
CR290
R289 1M
DMM
J176
P182
MAX PEAK DCV ACV-500V Ω - 250V
J174
P184
R190 1K
500V PEAK MAX
J172
J191
J203
J190
C190 .022
J490-7
HI LINE FROM P890-1
LOW LINE FROM P890-2
J150-20
J150-18
VTB FROM J138-5
VTC FROM J138-3
DUTY FACTOR FROM J138-1
VTH FROM J138-9
VTL FROM J138-7
PARTIAL A9 COUNTER BOARD
TEMP ZERO
TEMP CAL
+15V
R476 46.4K
R477 25K
R478 71.5K
R481 1.0M
R480 250K
R482 80.6K
R484 75.0K
R487 25K
C484 .01
R486 24.9K
R483 40.0K
C489 100
U480 LM308
-15V
P207
J150-24
J150-26
J150-22
TEMP °C
J171
C474 .01
R475 20.0K
R474 56.2K
R473 1.2K
VR473 6.2V
X1 FROM R331
CR180
K180
-14V
X10 FROM Q332
CR181
K181
K182
X100 FROM Q334
CR183
K183
K184
X1000 FROM Q336
CR185
K186
C182 1-3.5
C183 100
C185 1-3.5
C184 7.5
C186 .001
C192 1-3.5
C191 6.2
C193 .01
PARTIAL A7 DMM BOARD
PARTIAL A1 IO BOARD

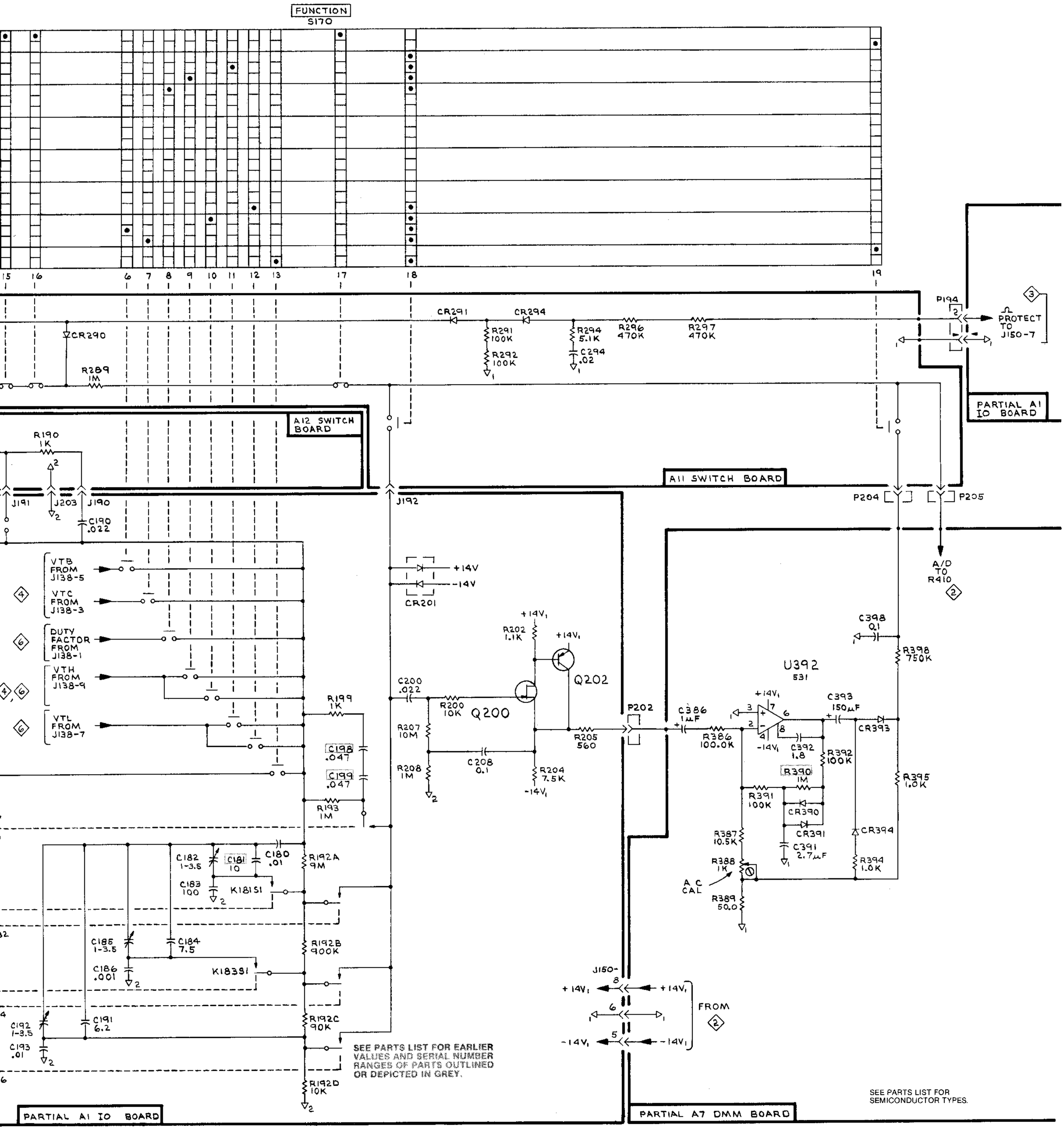

2192-125
REV A, OCT 1978

TEMPERATURE CONVERTOR
ACV CONVERTOR DMM ATTENUATOR

1

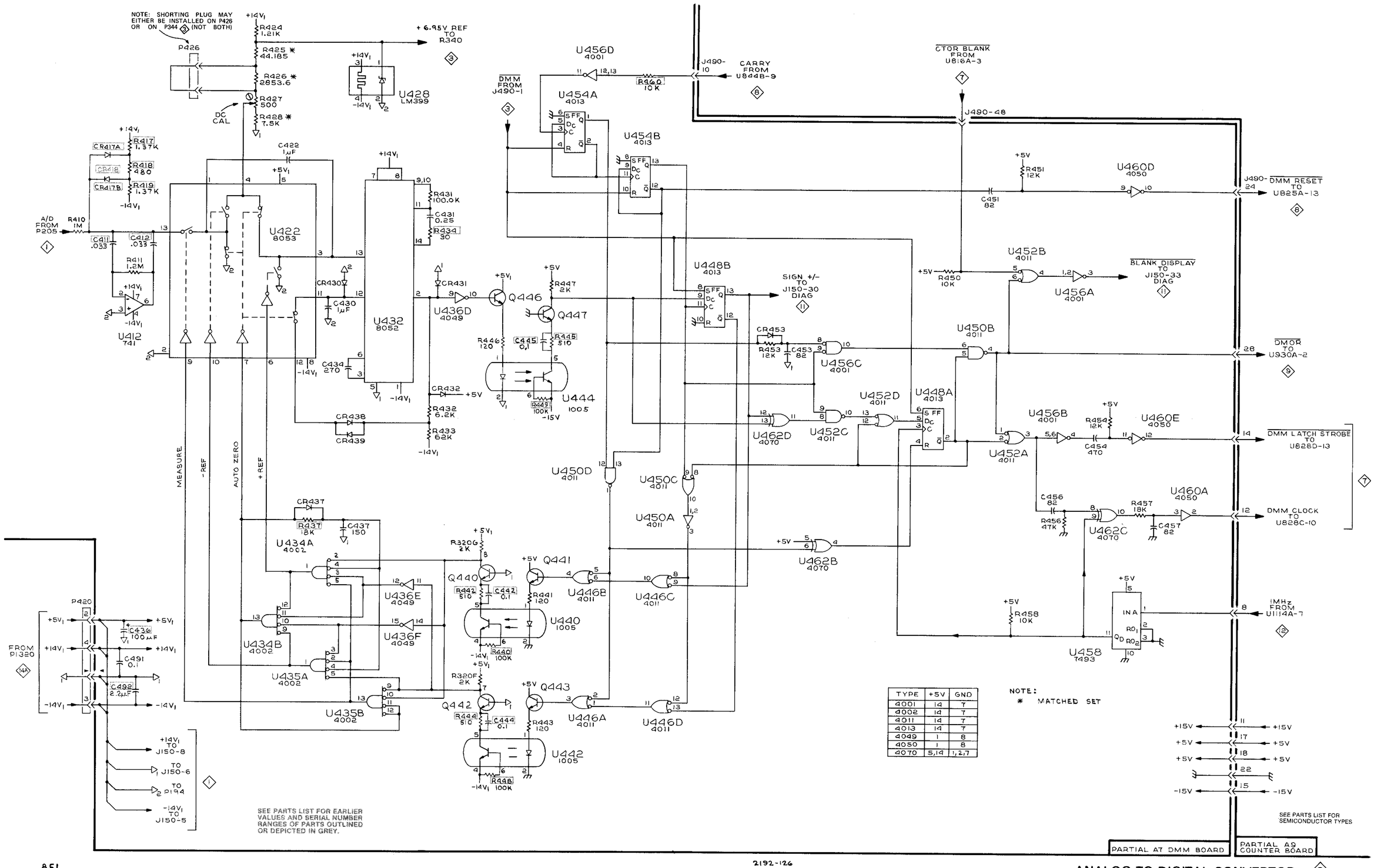

TYPE	+5V	GND
4001	14	7
4002	14	7
4011	14	7
4013	14	7
4049	1	8
4050	1	8
4070	5,14	1,2,7

NOTE:
* MATCHED SET

2192-126
REV. B, JULY 1979

ANALOG TO DIGITAL CONVERTOR 2

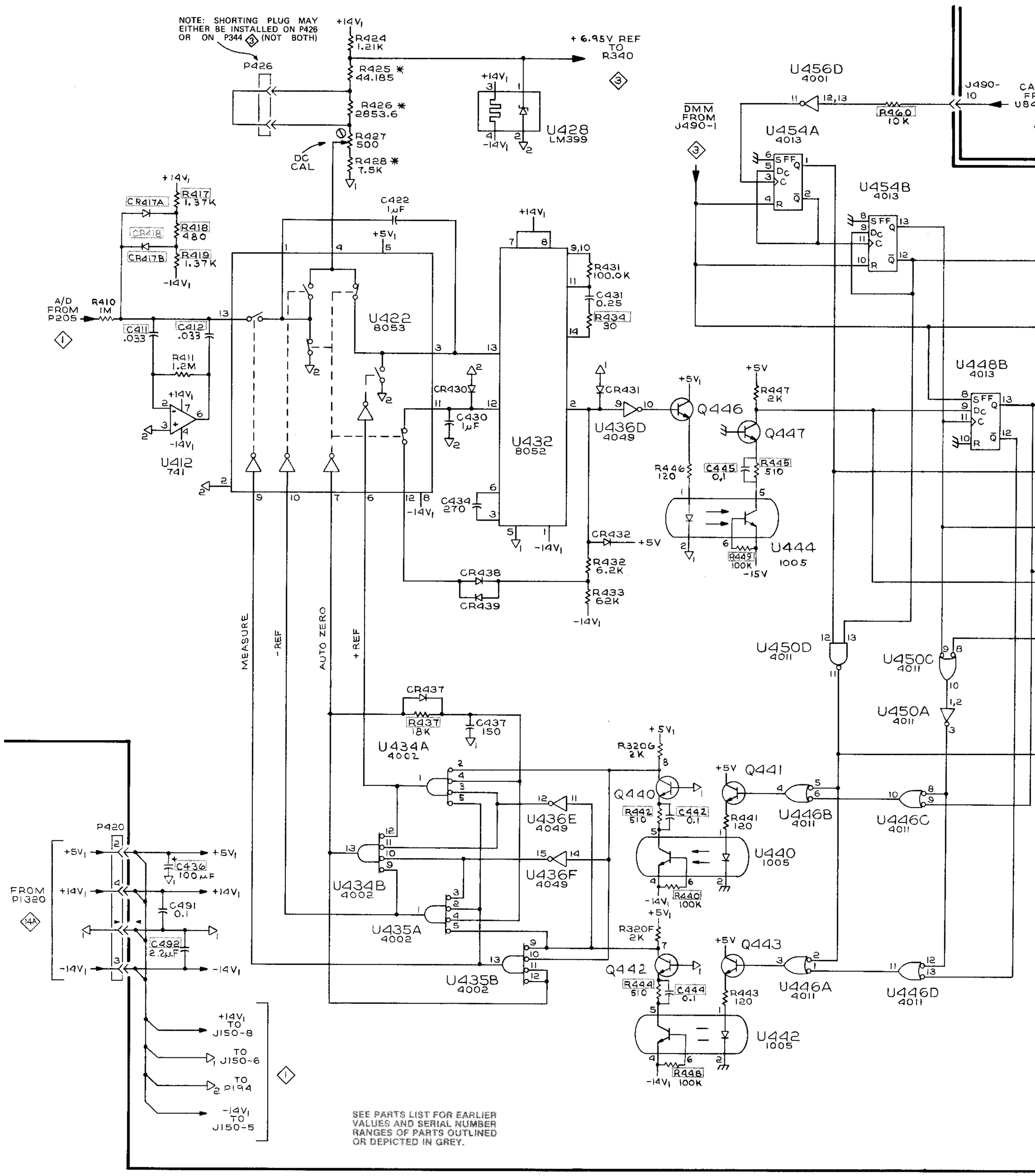
NOTE: SHORTING PLUG MAY EITHER BE INSTALLED ON P426 OR ON P344 (NOT BOTH)
P426
R424 1.21K
R425 * 44.185
R426 * 2853.6
R427 500
R428 * 7.5K
DC CAL
+6.95V REF TO R340
U428 LM399
R417 1.37K
CR417A
CR418
CR417B
R418 480
R419 1.37K
A/D FROM P205
R410 1M
C411 .033
C412 .033
R411 1.2M
U412 741
C422 1µF
U422 8053
U432 8052
R431 100.0K
C431 0.25
R434 30
CR430
C430 1µF
C434 270
CR431
U436D 4049
CR432
R432 6.2K
R433 62K
CR438
CR439
MEASURE
-REF
AUTO ZERO
+REF
U456D 4001
DMM FROM J490-1
U454A 4013
U454B 4013
R460 10K
J490-10
U448B 4013
Q446
Q447
R447 2K
R446 120
C445 0.1
R445 510
U444 1005
R445 100K
U450D 4011
U450C 4011
U450A 4011
CR437
R437 18K
C437 150
U434A 4002
U434B 4002
U435A 4002
U435B 4002
U436E 4049
U436F 4049
R320G 2K
Q440
R442 510
C442 0.1
R441 120
Q441
U446B 4011
U446C 4011
U440 1005
R440 100K
R320F 2K
Q442
R444 510
C444 0.1
R443 120
Q443
U446A 4011
U446D 4011
U442 1005
R448 100K
P420
FROM P1320
C436 100µF
C491 0.1
C492 2.2µF
+14V1 TO J150-8
TO J150-6
TO P194
-14V1 TO J150-5
SEE PARTS LIST FOR EARLIER VALUES AND SERIAL NUMBER RANGES OF PARTS OUTLINED OR DEPICTED IN GREY.

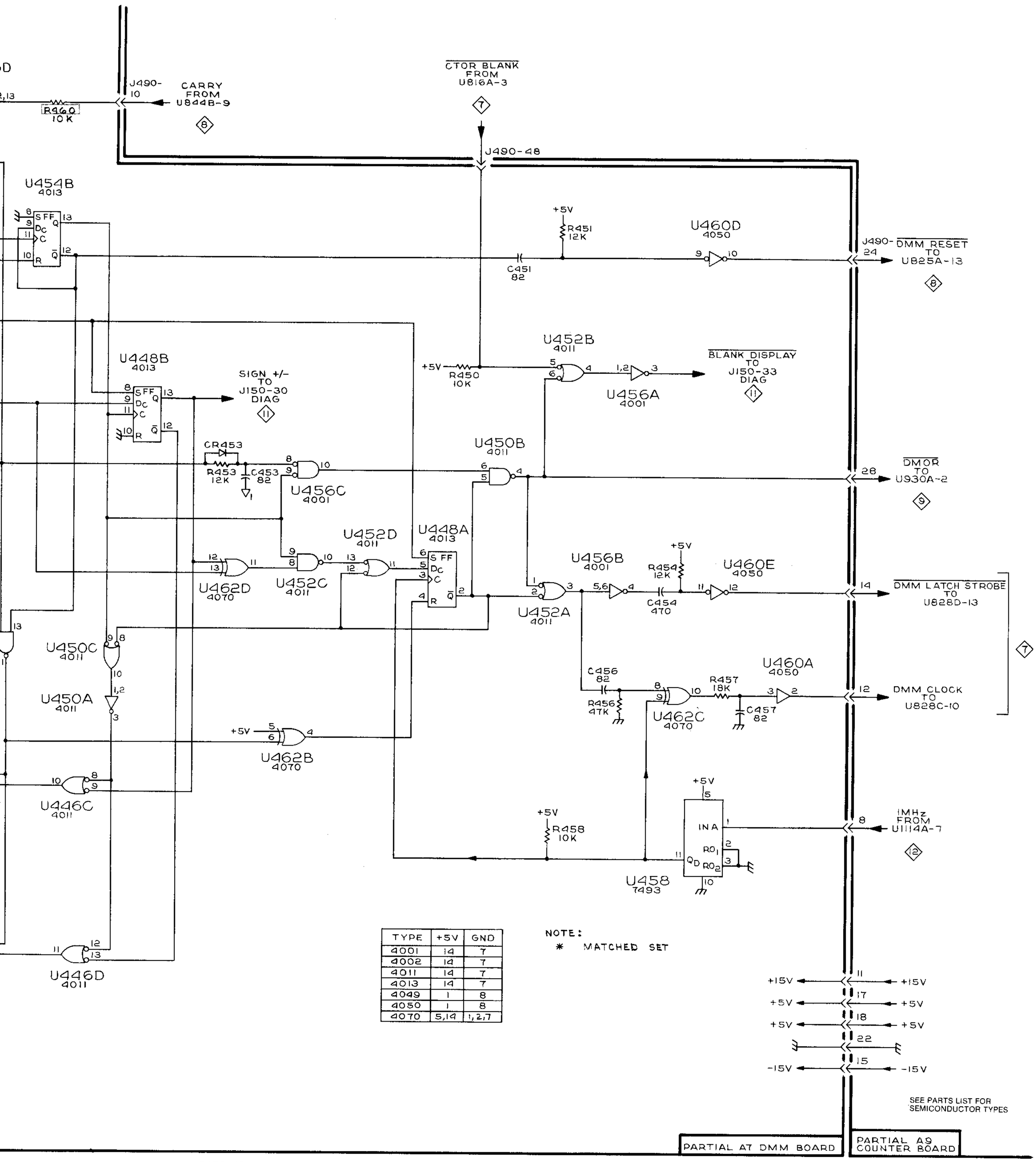

TYPE	+5V	GND
4001	14	7
4002	14	7
4011	14	7
4013	14	7
4049	1	8
4050	1	8
4070	5,14	1,2,7

NOTE:
* MATCHED SET

2192-126
REV. B, JULY 1979

ANALOG TO DIGITAL CONVERTOR 2

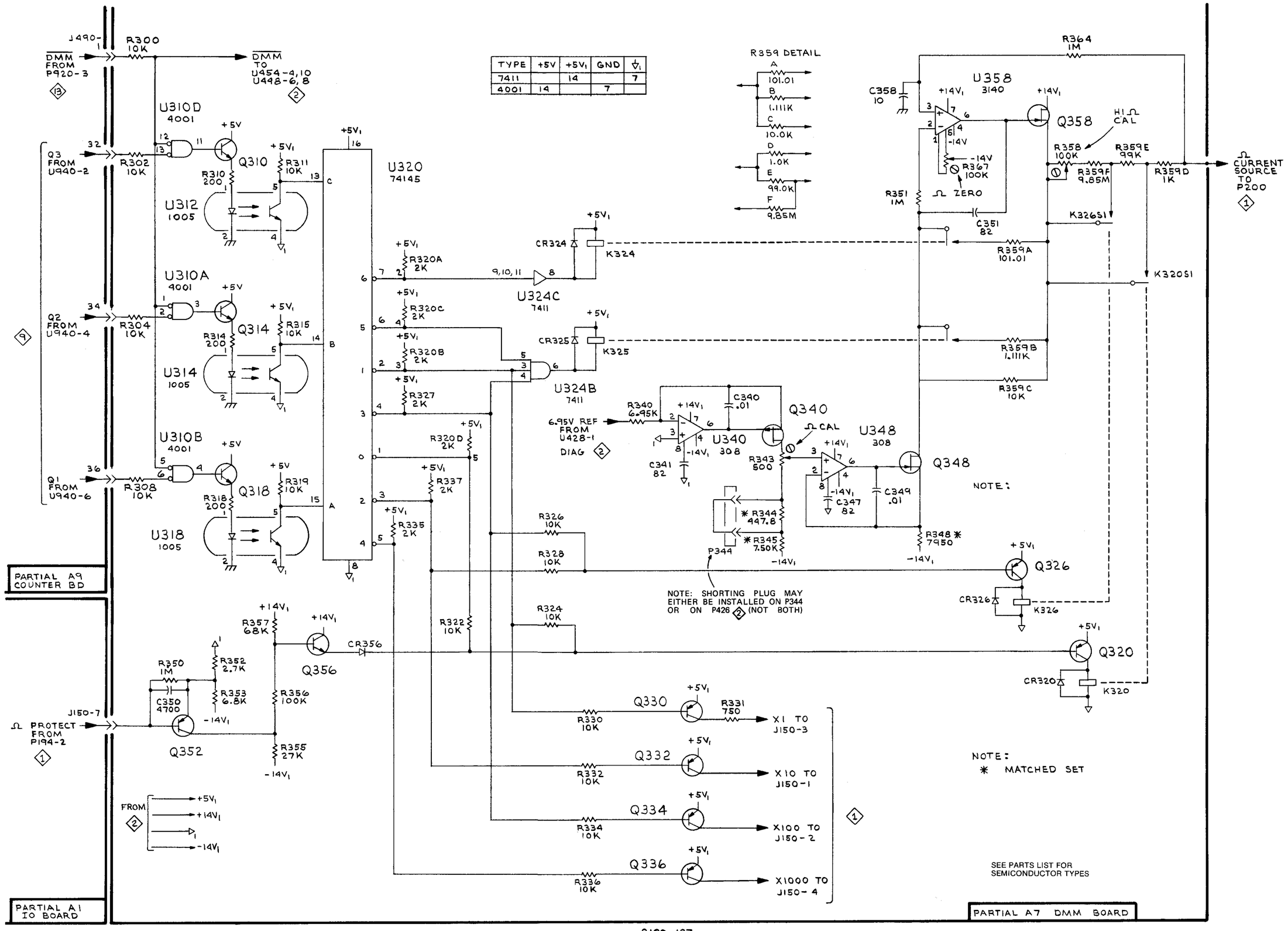

TYPE	+5V	+5V₁	GND	⏚₁
7411		14		7
4001	14		7	

2192-127
REV. B, JULY 1979

OHMS CONVERTOR DMM RANGE DECODE

3

TYPE	+5V	+5V₁	GND	⏚₁
7411		14		7
4001	14		7	

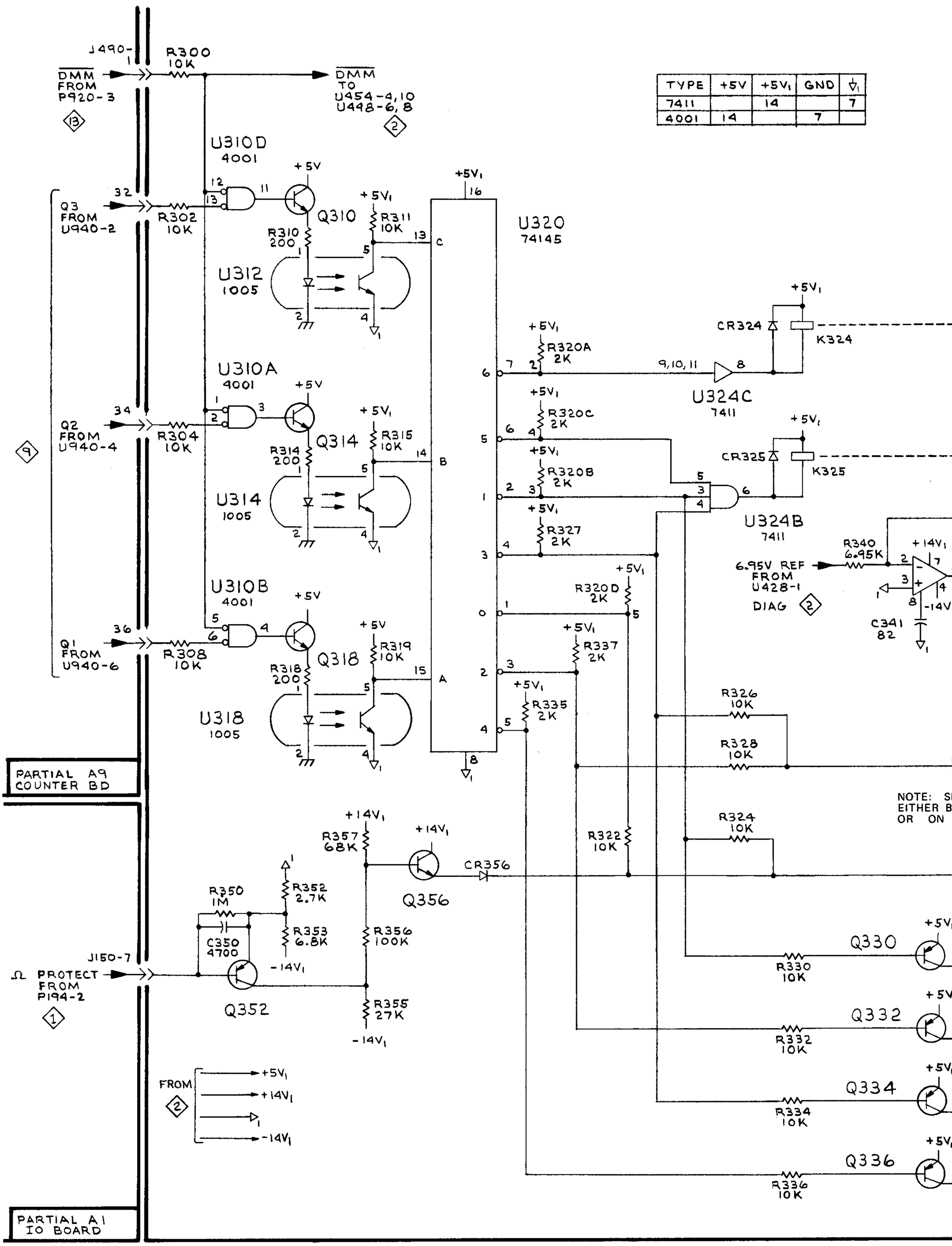

2192-127
REV. B, JULY

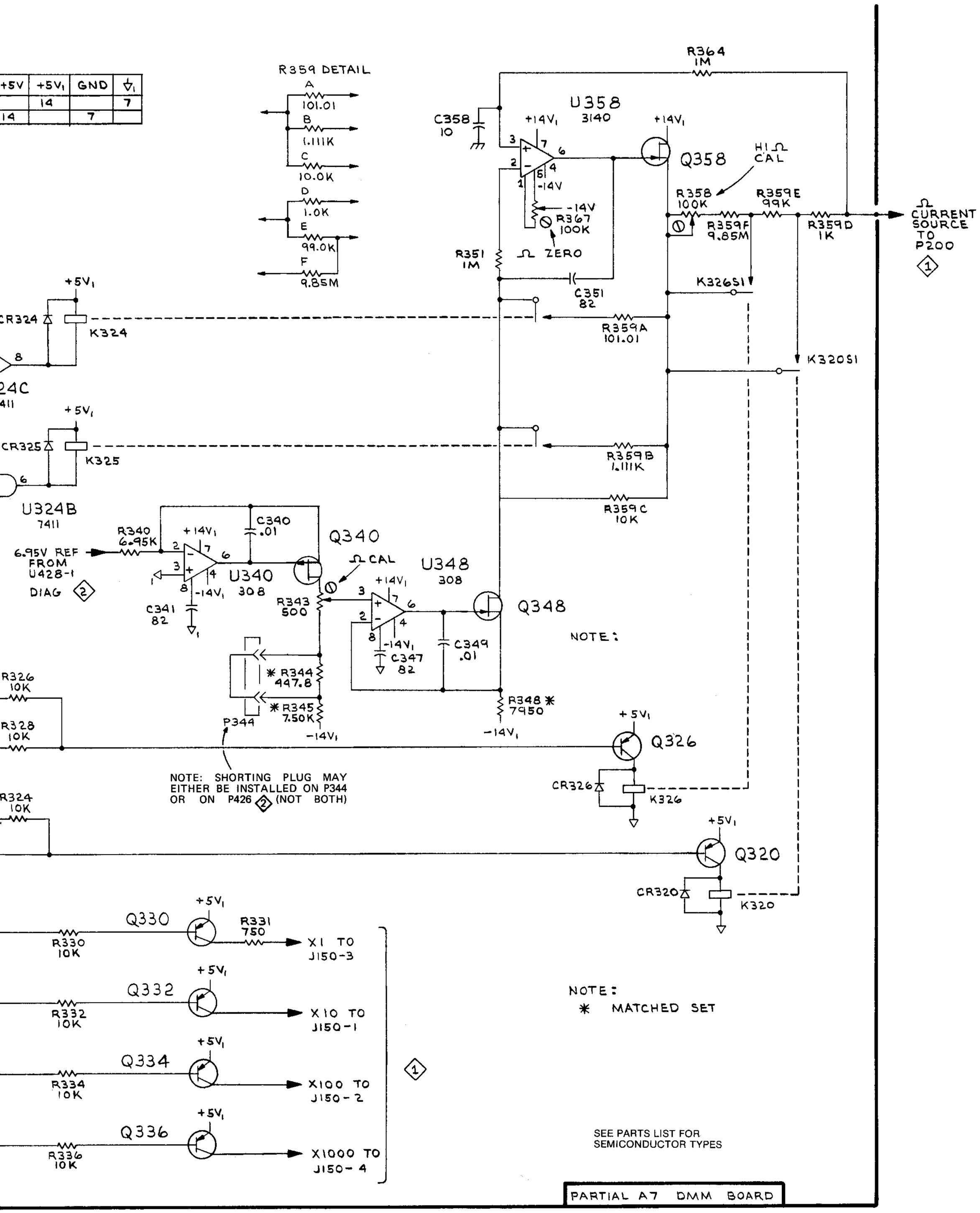

2192-127
REV. B, JULY 1979

OHMS CONVERTOR DMM RANGE DECODE

3

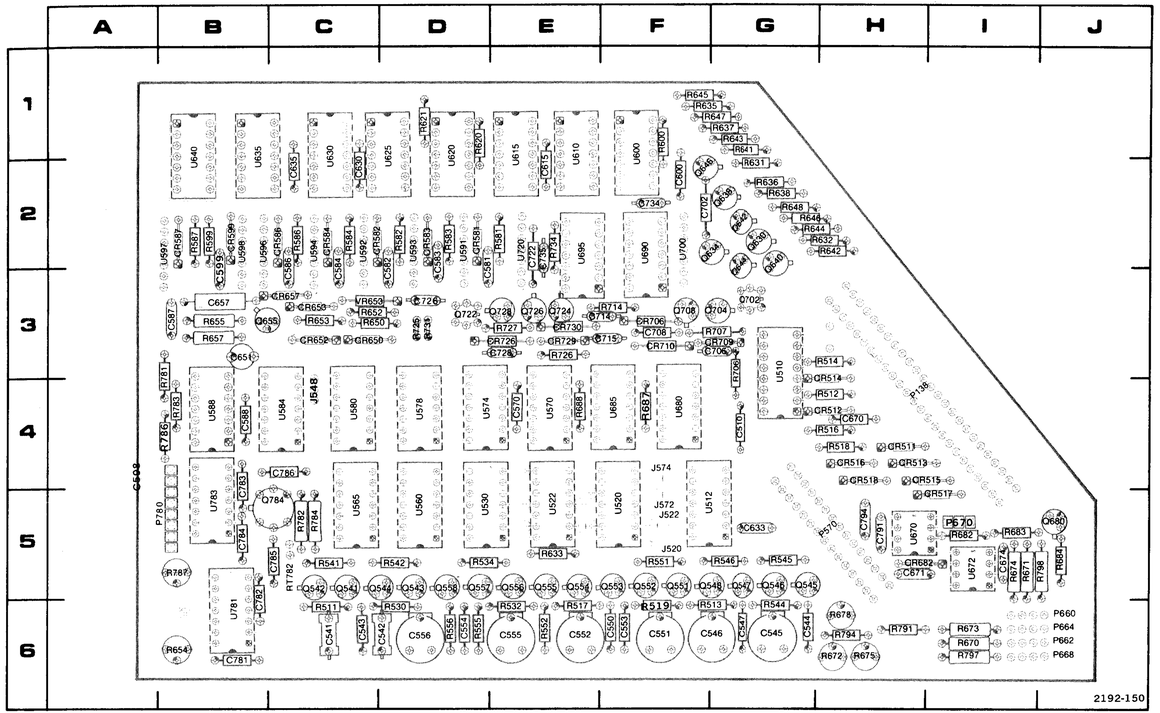

Figure 9-9. A4 Comparator board component locations.

CKT NO	GRID LOC	CKT NO	GRID LOC	CKT NO	GRID LOC	CKT NO	GRID LOC	CKT NO	GRID LOC
C510	4G	CR515	4I	Q640	2G	R646	2G	U593	2D
C541	6C	CR516	4H	Q642	2G	R647	1G	U594	2C
C542	6D	CR517	5I	Q644	2G	R648	2G	U596	2B
C543	6C	CR518	4H	Q646	2F	R650	3C	U597	2B
C544	6G	CR581	2D	Q655	3B	R652	3C	U598	2B
C545	6G	CR582	2C	Q680	5J	R653	3C	U600	1F
C546	6G	CR583	2D	Q702*	3G	R654	6B	U610	1E
C547	6G	CR584	2C	Q704	3G	R655	3B	U615	1E
C550	6F	CR586	2C	Q708	3F	R657	3B	U620	1D
C551	6F	CR587	2B	Q722*	3D	R670	6I	U625	1D
C552	6E	CR599	2B	Q724	3E	R671	5I	U630	1C
C553	6F	CR650	3C	Q726	3E	R672	6H	U635	1B
C554	6D	CR652	3C	Q728	3E	R673	6I	U640	1B
C555	6E	CR653	3C	Q784	5C	R674	5I	U670	5H
C556	6D	CR657	3C			R675	6H	U672	5I
C570	4E	CR682	5H	R511	6C	R678	6H	U680	4F
C581	2D	CR706	3F	R512	4H	R682	5I	U685	4F
C582	2D	CR709	3G	R513	6G	R683	5I	U690	2F
C583	2D	CR710	3F	R514	3H	R684	5J	U695	2E
C584	2C	CR726	3E	R516	4H	R687	4F	U700	2F
C586	2C	CR729	3E	R517	6E	R688	4E	U720	2E
C587	3B	CR730	3E	R518	4H	R706	3G	U781	6B
C588	4B			R519	6F	R707	3G	U783	5B
C599	3B	J520	5F	R530	6D	R714	3F		
C600	2F	J522	5F	R532	6E	R725	3D	VR653	3C
C615	2E	J572	5F	R534	5D	R726	3E		
C630	2C	J574	4F	R541	5C	R727	3E		
C633	5G	J584	4C	R542	5D	R731	3D		
C635	2C			R544	6G	R734	2E		
C651	3B	P138	4H	R545	5G	R781	3B		
C657	3B	P570	5H	R546	5G	R782	5C		
C670	4H	P660	6J	R551	5F	R783	4B		
C671	5H	P662	6J	R552	6E	R784	5C		
C674	5I	P664	6J	R555	6D	R786	4B		
C702	2F	P668	6J	R556	6D	R787	5B		
C706	3G	P670	5I	R581	2E	R791	6H		
C708	3F	P780	5B	R582	2D	R794	6H		
C714	3F			R583	2D	R797	6I		
C715	3F	Q541	5C	R584	2C	R798	5J		
C722	2E	Q542	5C	R586	2C				
C726	3D	Q543	5D	R587	2B	RT782	5C		
C728	3E	Q544	5D	R599	2B				
C734	2F	Q545	5G	R600	1F	U510	3G		
C735	2E	Q546	5G	R620	1D	U512	5F		
C781	6B	Q547	5G	R621	1D	U520	5F		
C782	6B	Q548	5G	R631	2G	U522	5E		
C783	4B	Q551	5F	R632	2G	U530	5D		
C784	5B	Q552	5F	R633	5E	U560	5D		
C785	5C	Q553	5F	R635	1F	U565	5C		
C786	4C	Q554	5E	R636	2G	U570	4E		
C791	5H	Q555	5E	R637	1G	U574	4D		
C794	5H	Q556	5E	R638	2G	U578	4D		
		Q557	5D	R641	1G	U580	4C		
CR511	4H	Q558	5D	R642	2H	U584	4C		
CR512	4H	Q630	2G	R643	1G	U588	4B		
CR513	4H	Q634	2G	R644	2G	U591	2D		
CR514	3H	Q638	2G	R645	1F	U592	2C		

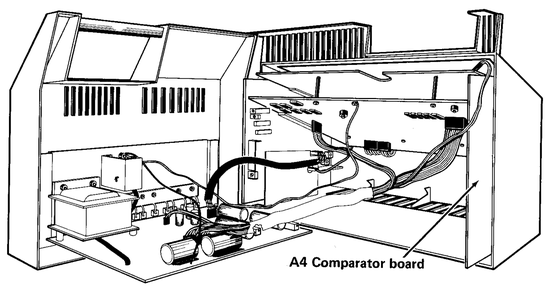

*See Parts List for serial number ranges.

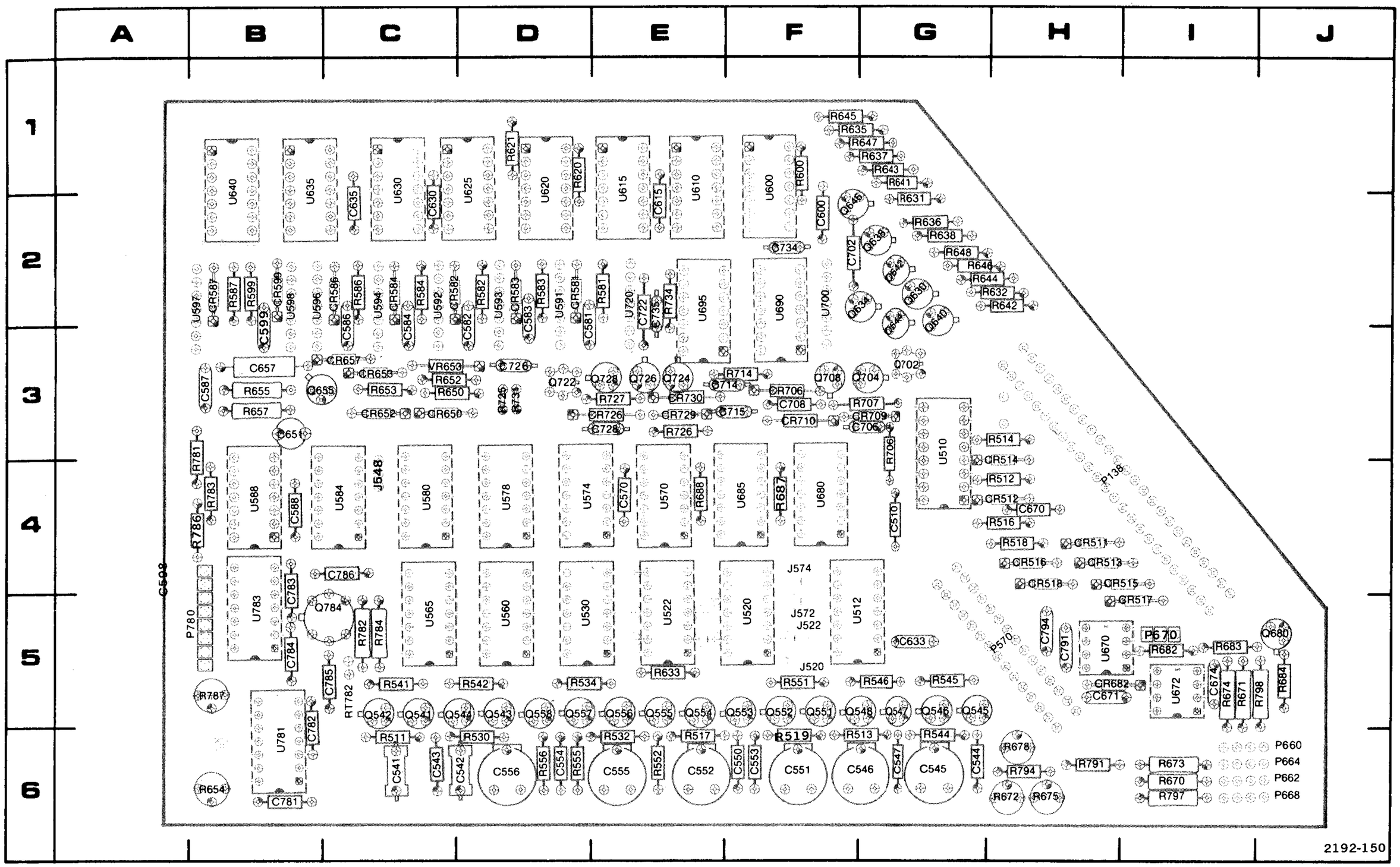

Figure 9-9. A4 Comparator board component locations.

CKT NO	GRID LOC	CKT NO	GRID LOC	CKT NO	GRID LOC	CKT NO	GRID LOC	CKT NO	GRID LOC
C510	4G	CR515	4I	Q640	2G	R646	2G	U593	2D
C541	6C	CR516	4H	Q642	2G	R647	1G	U594	2C
C542	6D	CR517	5I	Q644	2G	R648	2G	U596	2B
C543	6C	CR518	4H	Q646	2F	R650	3C	U597	2B
C544	6G	CR581	2D	Q655	3B	R652	3C	U598	2B
C545	6G	CR582	2C	Q680	5J	R653	3C	U600	1F
C546	6G	CR583	2D	Q702*	3G	R654	6B	U610	1E
C547	6G	CR584	2C	Q704	3G	R655	3B	U615	1E
C550	6F	CR586	2C	Q708	3F	R657	3B	U620	1D
C551	6F	CR587	2B	Q722*	3D	R670	6I	U625	1D
C552	6E	CR599	2B	Q724	3E	R671	5I	U630	1C
C553	6F	CR650	3C	Q726	3E	R672	6H	U635	1B
C554	6D	CR652	3C	Q728	3E	R673	6I	U640	1B
C555	6E	CR653	3C	Q784	5C	R674	5I	U670	5H
C556	6D	CR657	3C			R675	6H	U672	5I
C570	4E	CR682	5H	R511	6C	R678	6H	U680	4F
C581	2D	CR706	3F	R512	4H	R682	5I	U685	4F
C582	2D	CR709	3G	R513	6G	R683	5I	U690	2F
C583	2D	CR710	3F	R514	3H	R684	5J	U695	2E
C584	2C	CR726	3E	R516	4H	R687	4F	U700	2F
C586	2C	CR729	3E	R517	6E	R688	4E	U720	2E
C587	3B	CR730	3E	R518	4H	R706	3G	U781	6B
C588	4B			R519	6F	R707	3G	U783	5B
C599	3B	J520	5F	R530	6D	R714	3F		
C600	2F	J522	5F	R532	6E	R725	3D	VR653	3C
C615	2E	J572	5F	R534	5D	R726	3E		
C630	2C	J574	4F	R541	5C	R727	3E		
C633	5G	J584	4C	R542	5D	R731	3D		
C635	2C			R544	6G	R734	2E		
C651	3B	P138	4H	R545	5G	R781	3B		
C657	3B	P570	5H	R546	5G	R782	5C		
C670	4H	P660	6J	R551	5F	R783	4B		
C671	5H	P662	6J	R552	6E	R784	5C		
C674	5I	P664	6J	R555	6D	R786	4B		
C702	2F	P668	6J	R556	6D	R787	5B		
C706	3G	P670	5I	R581	2E	R791	6H		
C708	3F	P780	5B	R582	2D	R794	6H		
C714	3F			R583	2D	R797	6I		
C715	3F	Q541	5C	R584	2C	R798	5J		
C722	2E	Q542	5C	R586	2C				
C726	3D	Q543	5D	R587	2B	RT782	5C		
C728	3E	Q544	5D	R599	2B				
C734	2F	Q545	5G	R600	1F	U510	3G		
C735	2E	Q546	5G	R620	1D	U512	5F		
C781	6B	Q547	5G	R621	1D	U520	5F		
C782	6B	Q548	5G	R631	2G	U522	5E		
C783	4B	Q551	5F	R632	2G	U530	5D		
C784	5B	Q552	5F	R633	5E	U560	5D		
C785	5C	Q553	5F	R635	1F	U565	5C		
C786	4C	Q554	5E	R636	2G	U570	4E		
C791	5H	Q555	5E	R637	1G	U574	4D		
C794	5H	Q556	5E	R638	2G	U578	4D		
		Q557	5D	R641	1G	U580	4C		
CR511	4H	Q558	5D	R642	2H	U584	4C		
CR512	4H	Q630	2G	R643	1G	U588	4B		
CR513	4H	Q634	2G	R644	2G	U591	2D		
CR514	3H	Q638	2G	R645	1F	U592	2C		

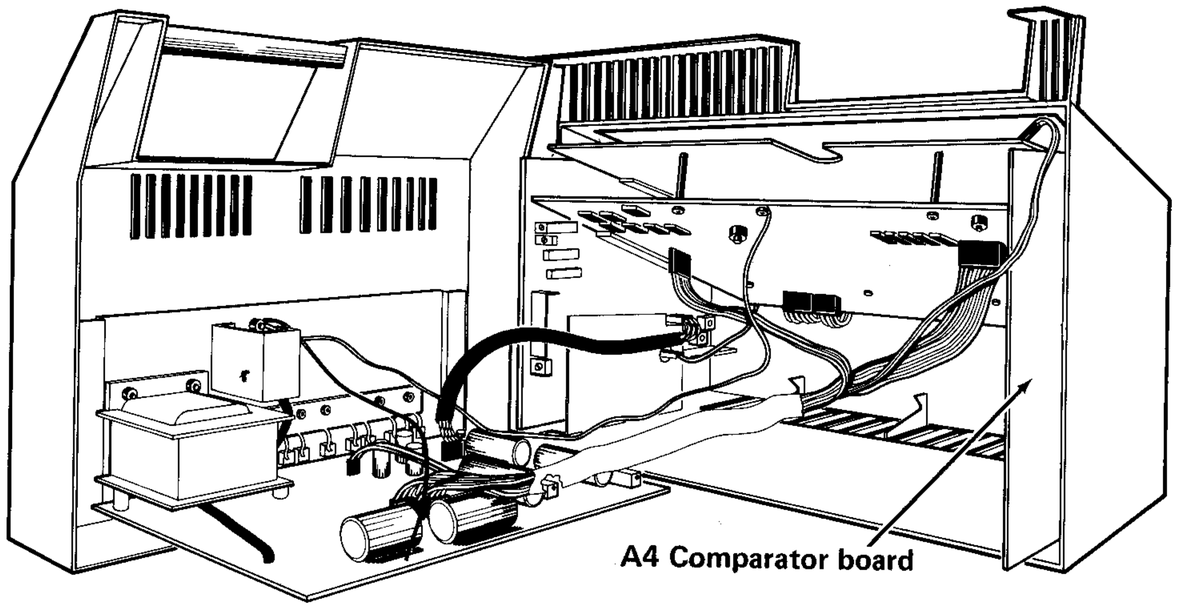

*See Parts List for serial number ranges.

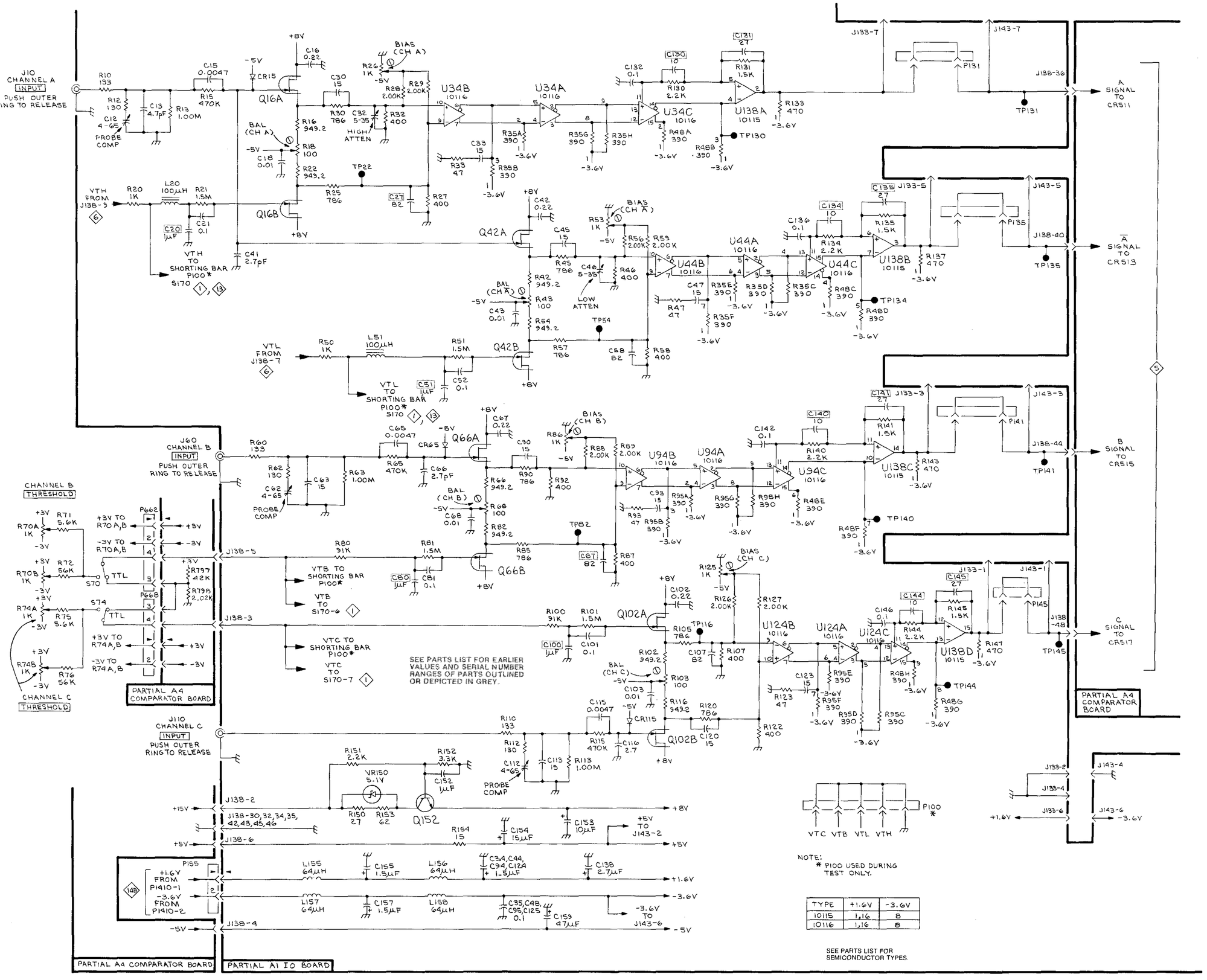

TYPE	+1.6V	-3.6V
10115	1,16	8
10116	1,16	8

2192-128
REV B FEB 1980

INPUT COMPARATORS 4

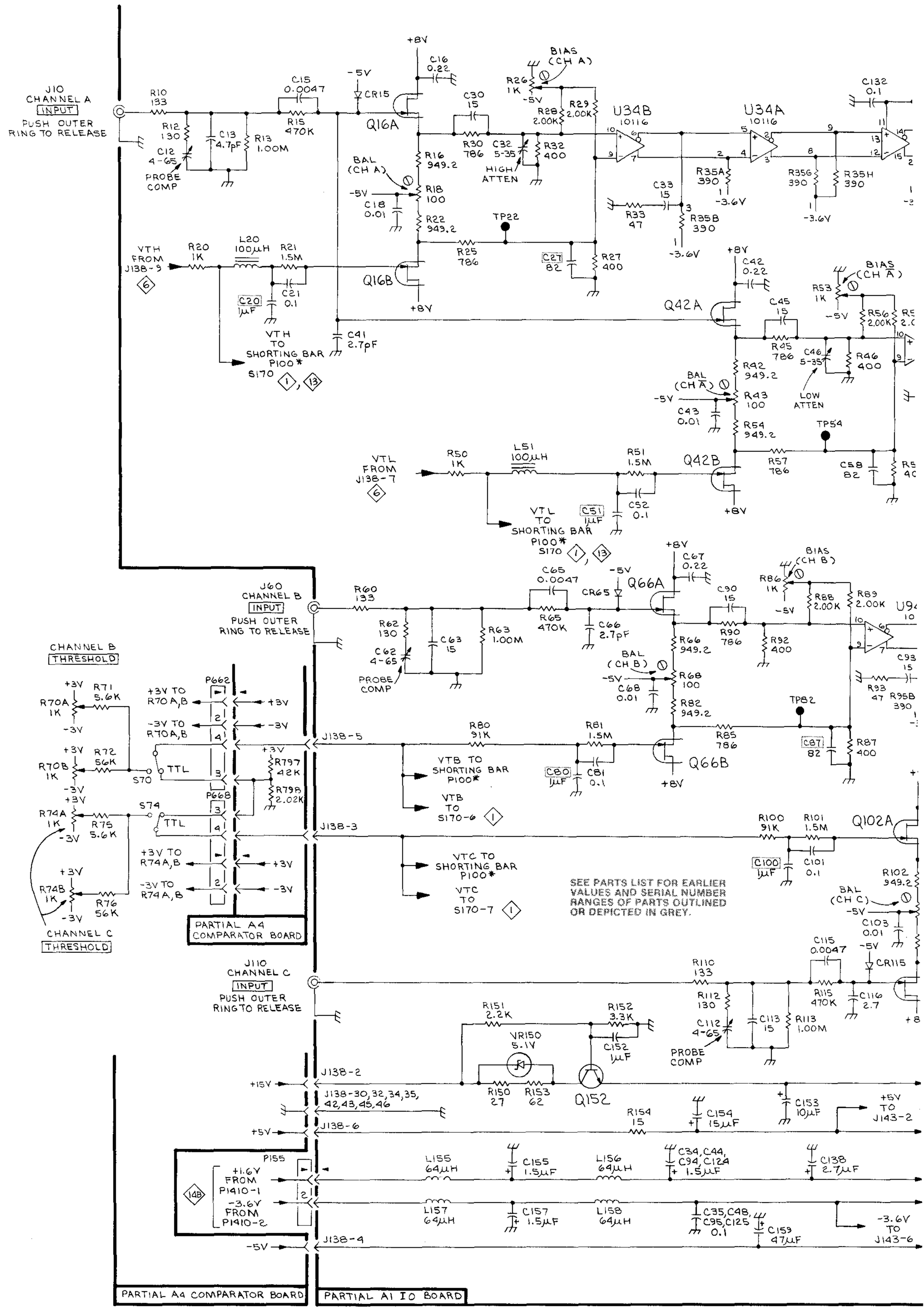

SEE PARTS LIST FOR EARLIER VALUES AND SERIAL NUMBER RANGES OF PARTS OUTLINED OR DEPICTED IN GREY.

2192-128
REV B FEB 1980

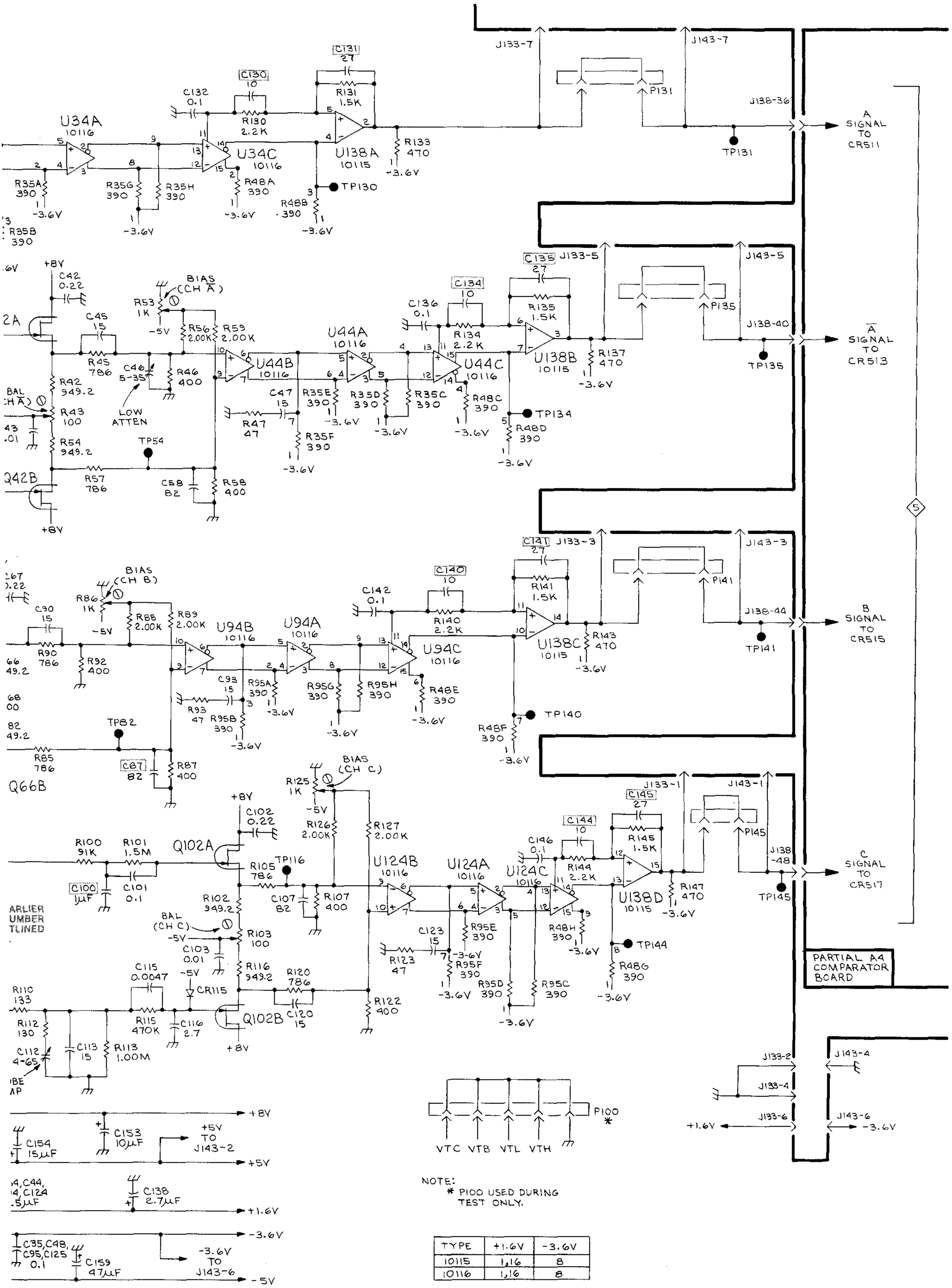

NOTE:
* P100 USED DURING TEST ONLY.

TYPE	+1.6V	-3.6V
10115	1,16	8
10116	1,16	8

SEE PARTS LIST FOR SEMICONDUCTOR TYPES.

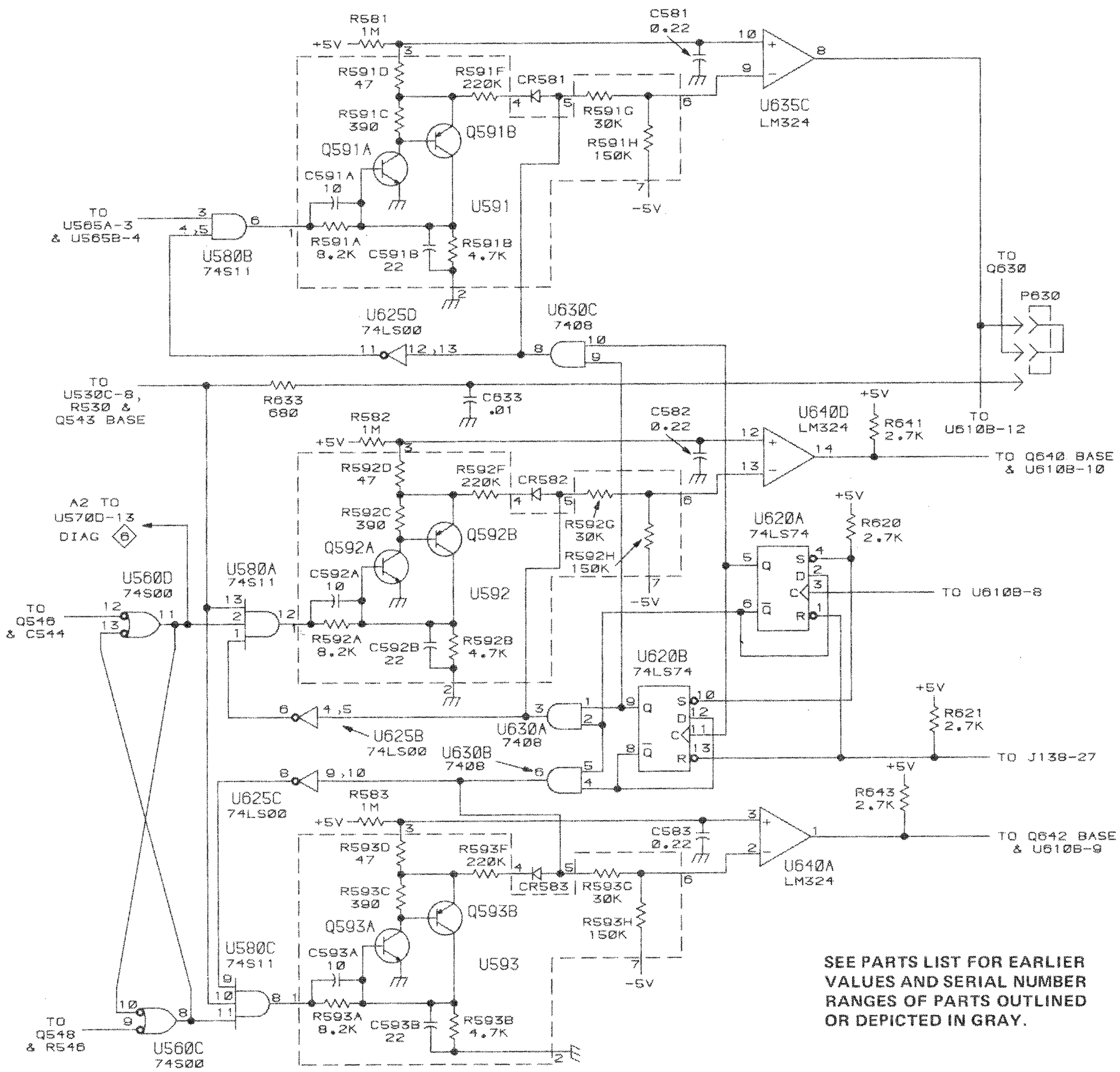

SEE PARTS LIST FOR EARLIER VALUES AND SERIAL NUMBER RANGES OF PARTS OUTLINED OR DEPICTED IN GRAY.

PARTIAL ⟨5⟩ EARLY SN VERSION

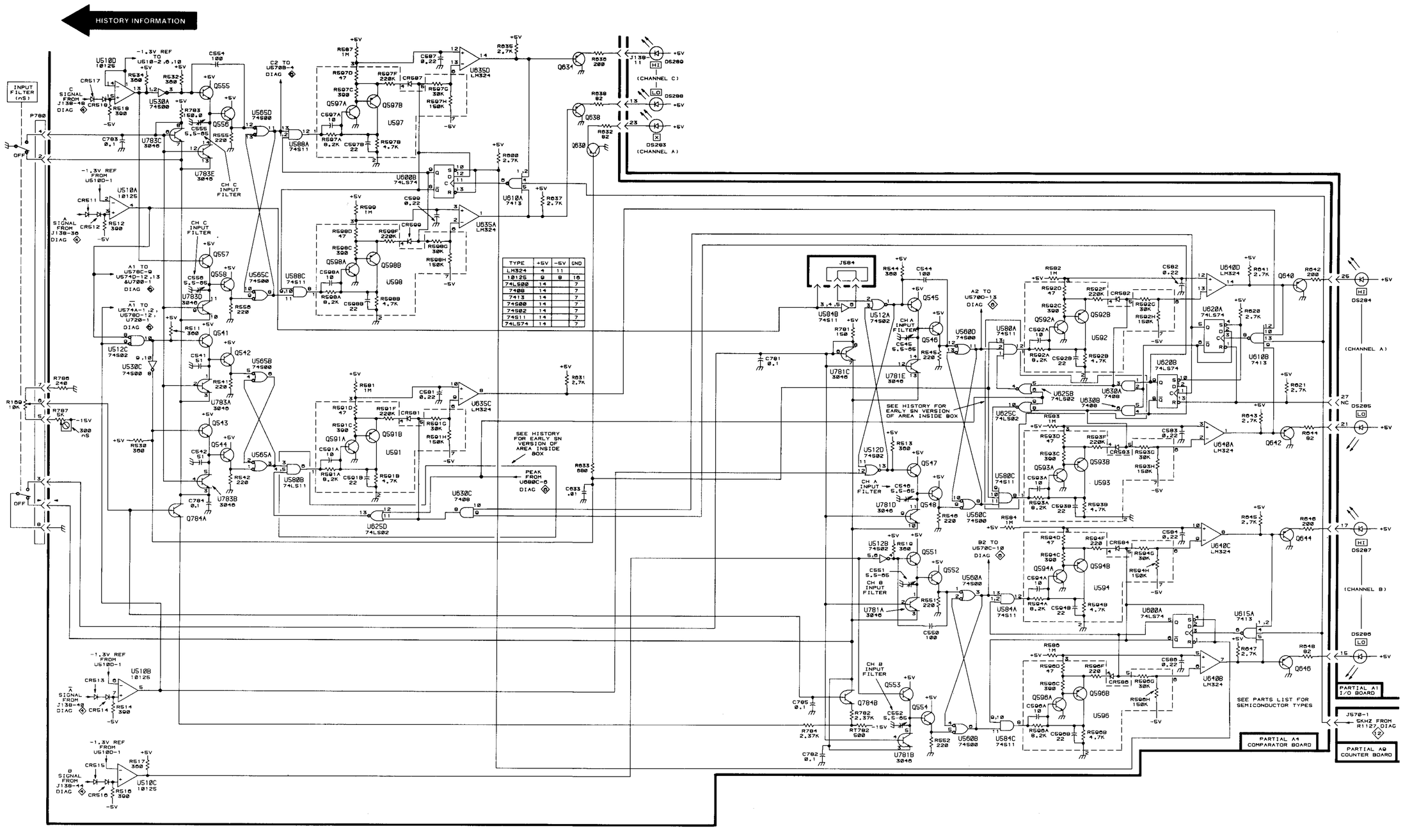

TYPE	+5V	-5V	GND
LM324	4	11	
10125	9	8	16
74LS02	14		7
7408	14		7
7413	14		7
74S00	14		7
74S02	14		7
74S11	14		7
74LS74	14		7

2192-129
REV. A OCT 1978

INPUT FILTER LOGIC LEVEL INDICATORS 5

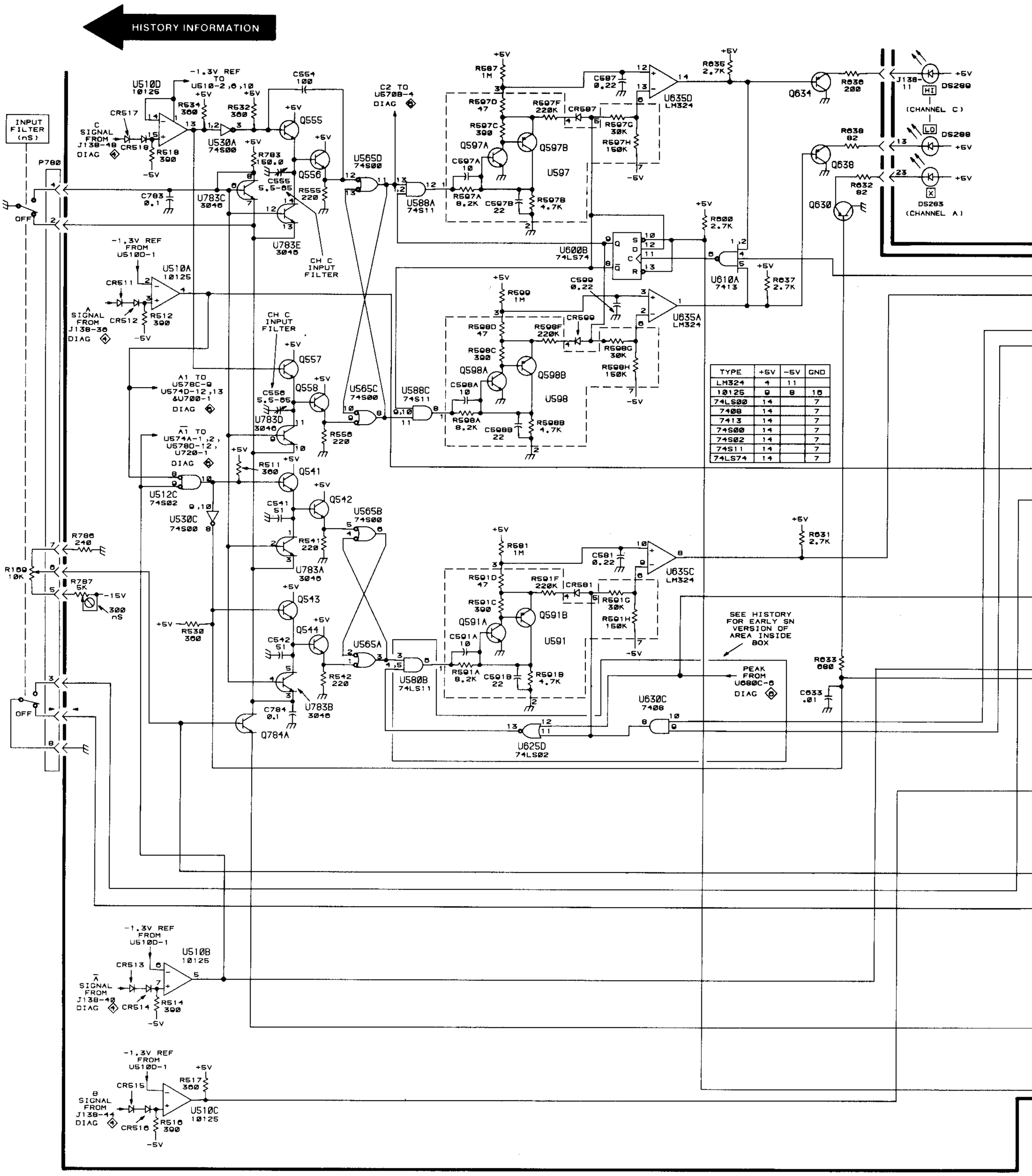

TYPE	+5V	-5V	GND
LM324	4	11	
10125	9	8	16
74LS00	14		7
7408	14		7
7413	14		7
74S00	14		7
74S02	14		7
74S11	14		7
74LS74	14		7

2192-129
REV. A OCT 1978

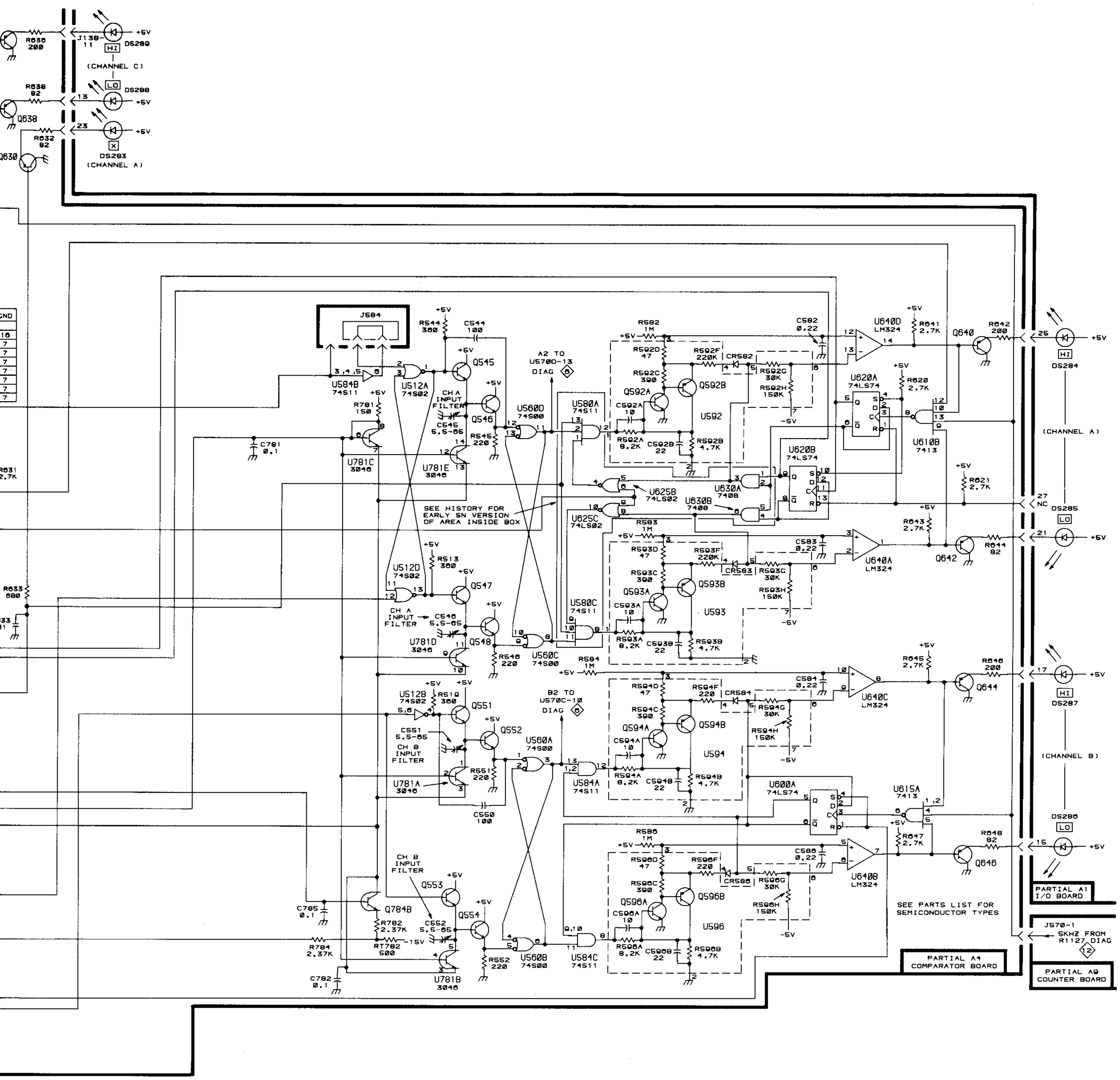

2192-129
REV. A OCT 1978

INPUT FILTER LOGIC LEVEL INDICATORS 5

TYPE	+5V	-5V	+15V	-15V	GND
LM324	4	11			
LM741			7	4	
1458			8	4	
4066	14	7			
7400	14				7
74500	14				7
74532	14				7
74586	14				7

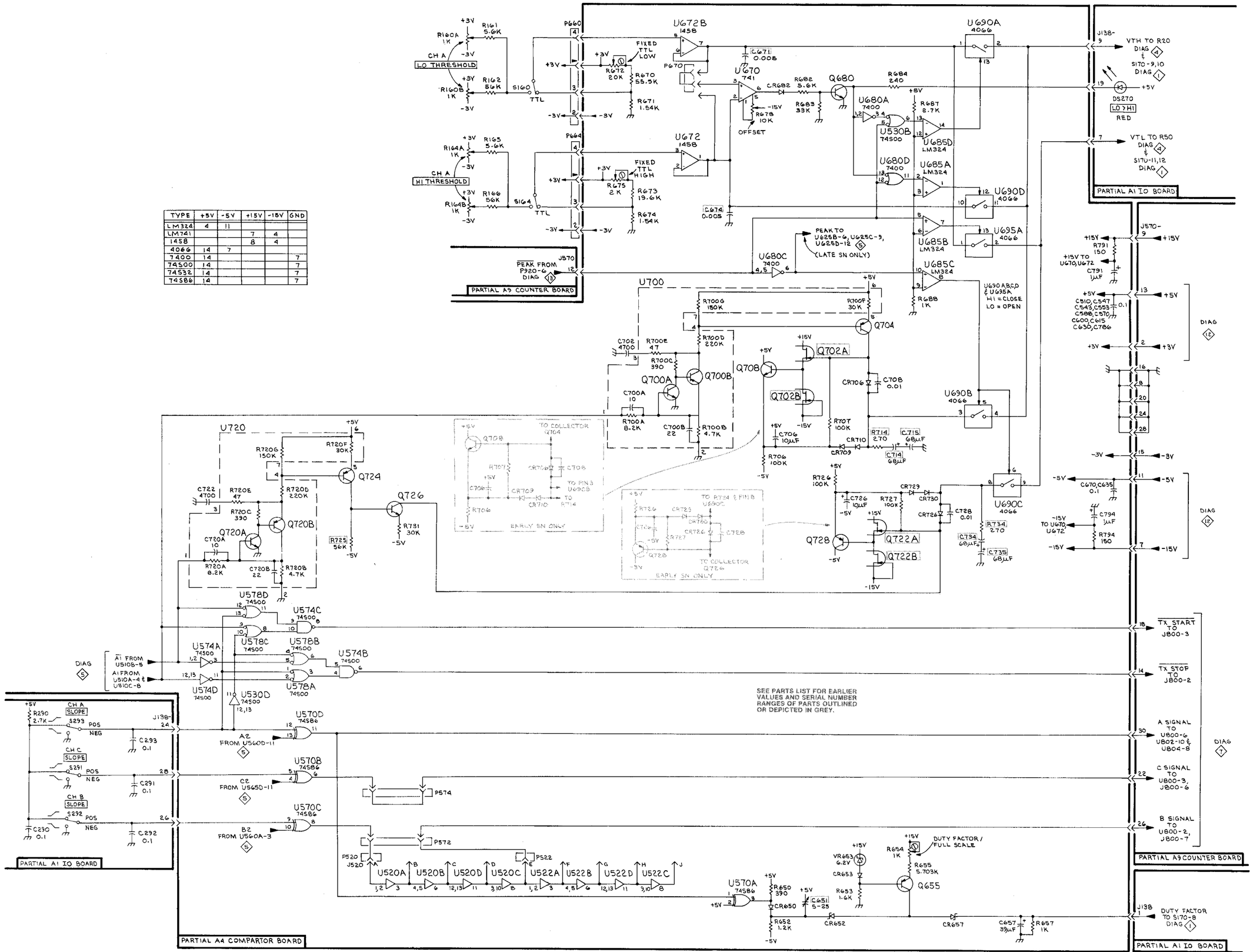

2192-130
REV A, OCT 1978

PEAK DETECTORS TRANSITION START/STOP
SLOPE SWITCHES DUTY FACTOR CONVERTORS 6

TYPE	+5V	-5V	+15V	-15V	GND
LM324	4	11			
LM741			7	4	
1458			8	4	
4066	14	7			
7400	14				7
74S00	14				7
74S32	14				7
74S86	14				7

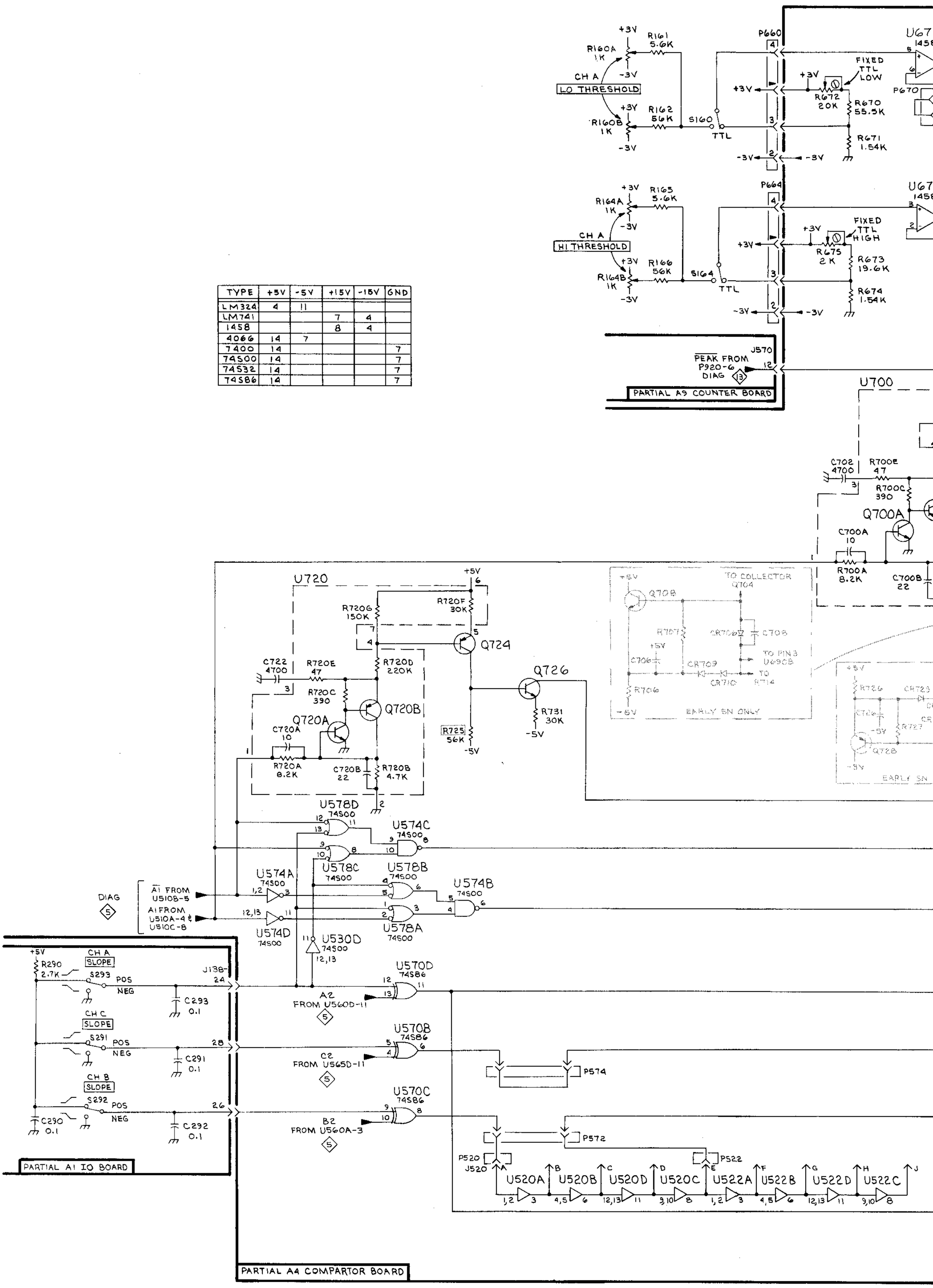

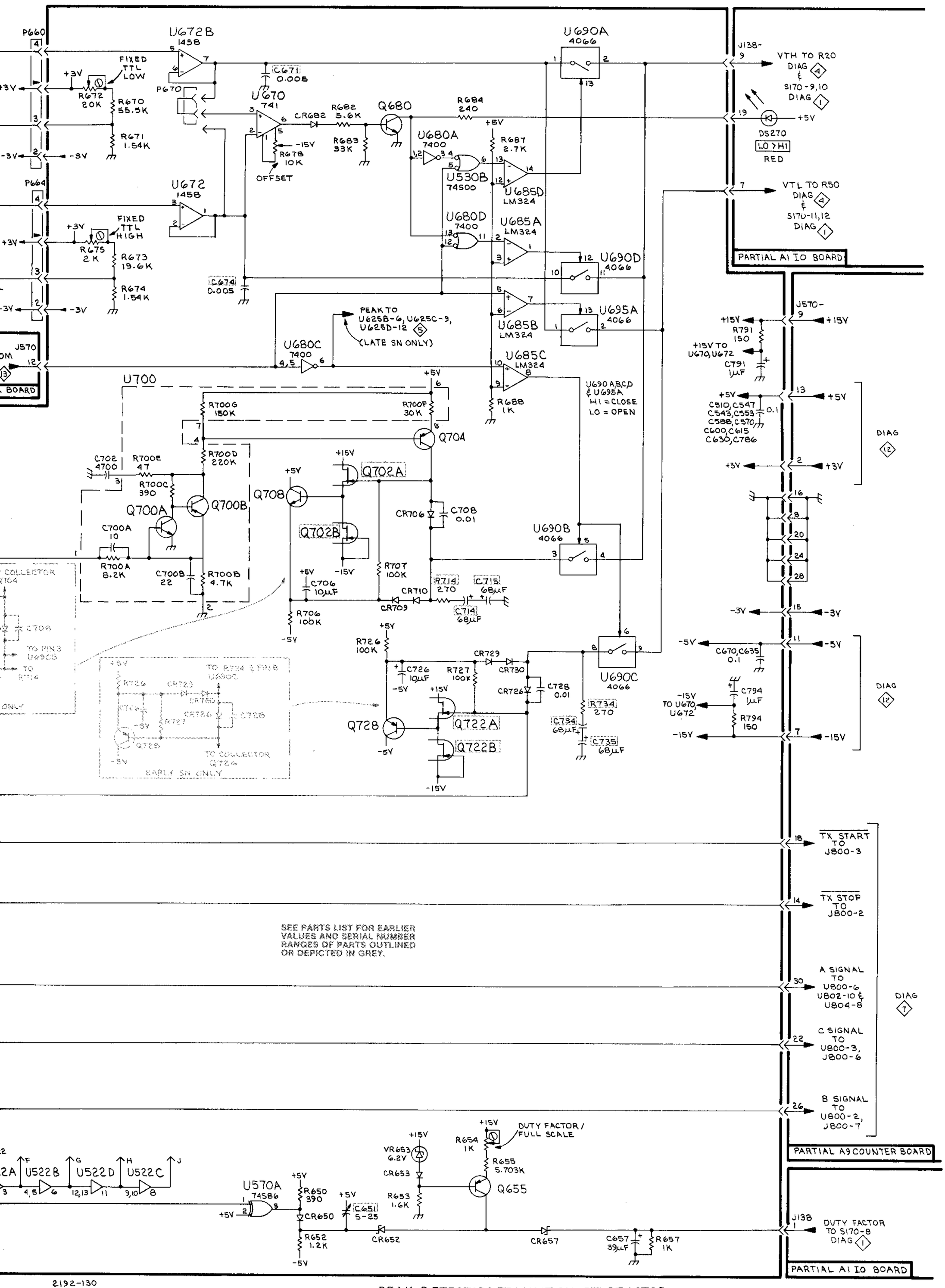

2192-130
REV A, OCT 1978

PEAK DETECTORS TRANSITION START/STOP
SLOPE SWITCHES DUTY FACTOR CONVERTORS

6

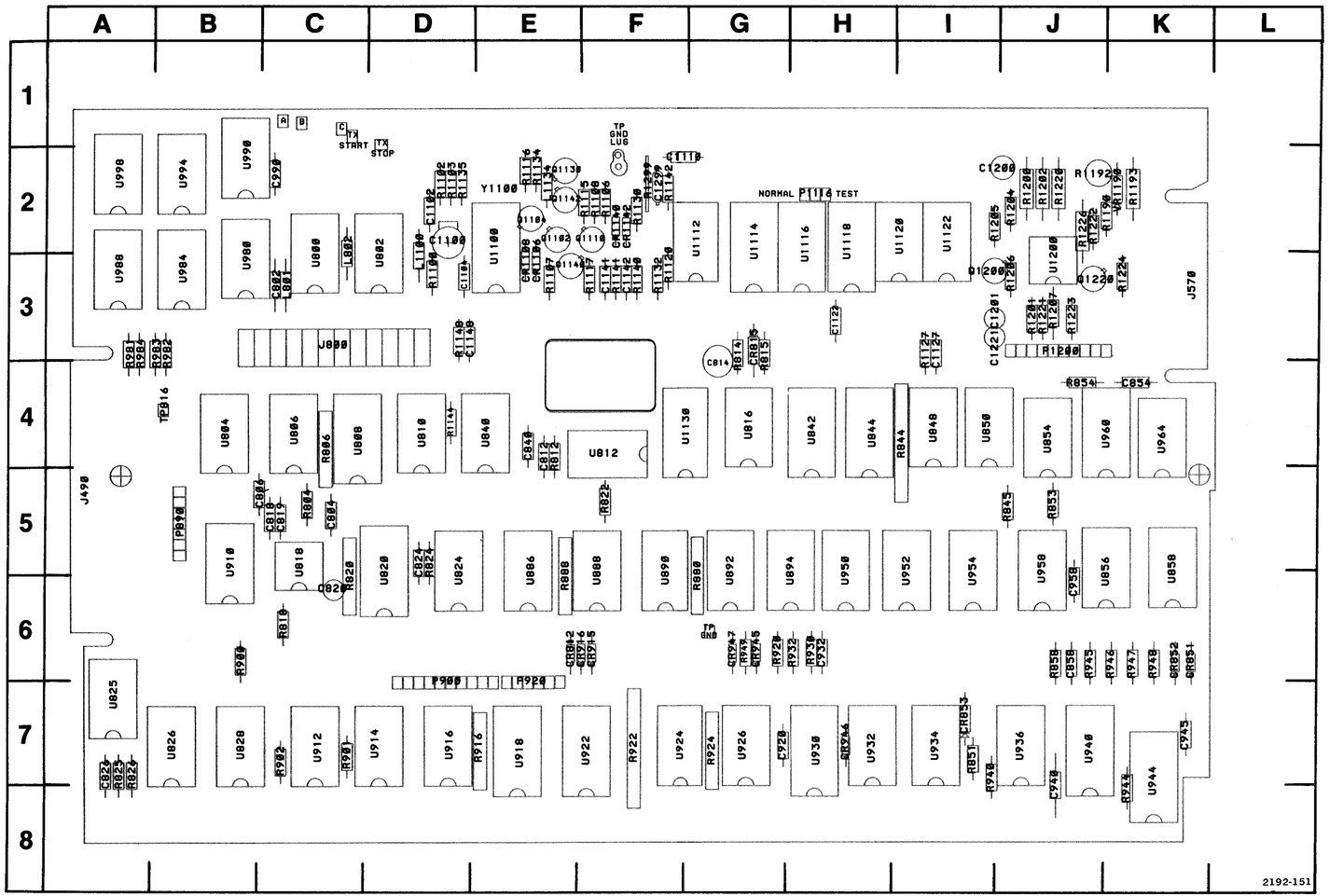

Figure 9-10. A9 Counter board component locations.

CKT NO	GRID LOC	CKT NO	GRID LOC	CKT NO	GRID LOC	CKT NO	GRID LOC
C802	3C	R804	5C	R1222	2J	U1100	2E
C804	5C	R806	4C	R1223	3J	U1112	2G
C806	5B	R812	4E	R1224	3K	U1114	2G
C812	4E	R814	3G	R1226	2J	U1116	2H
C814	3G	R815	3G	R1299	2F	U1118	2H
C818	5C	R818	6C			U1120	2I
C819	5C	R820	5C	TP816	4B	U1122	2I
C820	6C	R822	5F	TP A	1C	U1130	4G
C824	5D	R824	5D	TP B	1C	U1200	3J
C826	7A	R825	7A	TP C	1C		
C840	4E	R826	7A	TP GND	6G	VR1190*	2K
C854	4K	R844	4I	TP GND			
C858	6J	R845	5J	LUG	1F	Y1100	2E
C920	7G	R851	7I	TP TX			
C932	6H	R853	5J	START	1C		
C940	8J	R854	4J	TP TX			
C945	7K	R858	6J	STOP	1D		
C958	6J	R880	5G				
C990	2C	R888	6E	U800	2C		
C1100	2D	R900	6B	U802	2D		
C1102	2D	R901	7C	U804*	4B		
C1104	3D	R902	7C	U806	4C		
C1110	2F	R916	7E	U808	4C		
C1122	3H	R920	6G	U810	4D		
C1127	3I	R922	7F	U812	4F		
C1141	3F	R924	7G	U816	4G		
C1142	3F	R930	6H	U818	5C		
C1148	3D	R932	6H	U820	5D		
C1200	2I	R940	7I	U824	5D		
C1201	3I	R944	8K	U825	7A		
C1221	3I	R945	6J	U826	7B		
C1299	2F	R946	6K	U828	7B		
		R947	6K	U840	4E		
CR812	6E	R948	6K	U842	4H		
CR815	3G	R949	6G	U844	4H		
CR851	6K	R981	3A	U848	4I		
CR852	6K	R982	3B	U850	4I		
CR853	7I	R983	3B	U854	4J		
CR915	6F	R984	3A	U856	5K		
CR916	6F	R1100	3D	U858	5K		
CR945	6G	R1102	2D	U886	5E		
CR946	7H	R1103	2D	U888	5F		
CR947	6G	R1106	2F	U890	5F		
CR1106	3E	R1107	3E	U892	6G		
CR1108	3E	R1108	2F	U894	5H		
CR1140	2F	R1115	2F	U910	5B		
CR1142	2F	R1116	2E	U912	7C		
		R1117	3F	U914	7D		
J490	5A	R1120	3F	U916	7D		
J570	3K	R1127	3I	U918	7E		
J800	3C	R1130	2F	U922	7F		
		R1132	3F	U924	7F		
L801	3C	R1134	2E	U926	7G		
L802	2C	R1135	2D	U930	7H		
L1100	2D	R1140	3F	U932	7H		
L1134	2E	R1141	3F	U934	7I		
		R1142	2F	U936	7J		
P890	5B	R1144	4D	U940	7J		
P900	7D	R1148	3D	U944	7K		
P920	7E	R1190*	2K	U950	5H		
P1116	2H	R1192*	2J	U952	5I		
P1200	3J	R1193*	2K	U954	5I		
		R1200	2J	U958	5J		
Q1102	2E	R1201	3J	U960	4K		
Q1104	2E	R1202	2J	U964	4K		
Q1110	2F	R1204	2J	U980	3B		
Q1130	2E	R1205	2I	U984	3B		
Q1140	3E	R1206	3J	U988	3A		
Q1142	2E	R1207	3J	U990	2B		
Q1200	3I	R1220	2J	U994	2B		
Q1220	3J	R1221	3J	U998	2A		

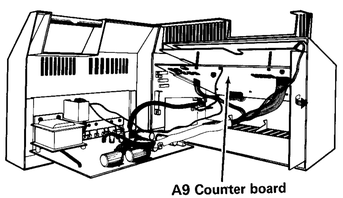

*See Parts List for serial number ranges.

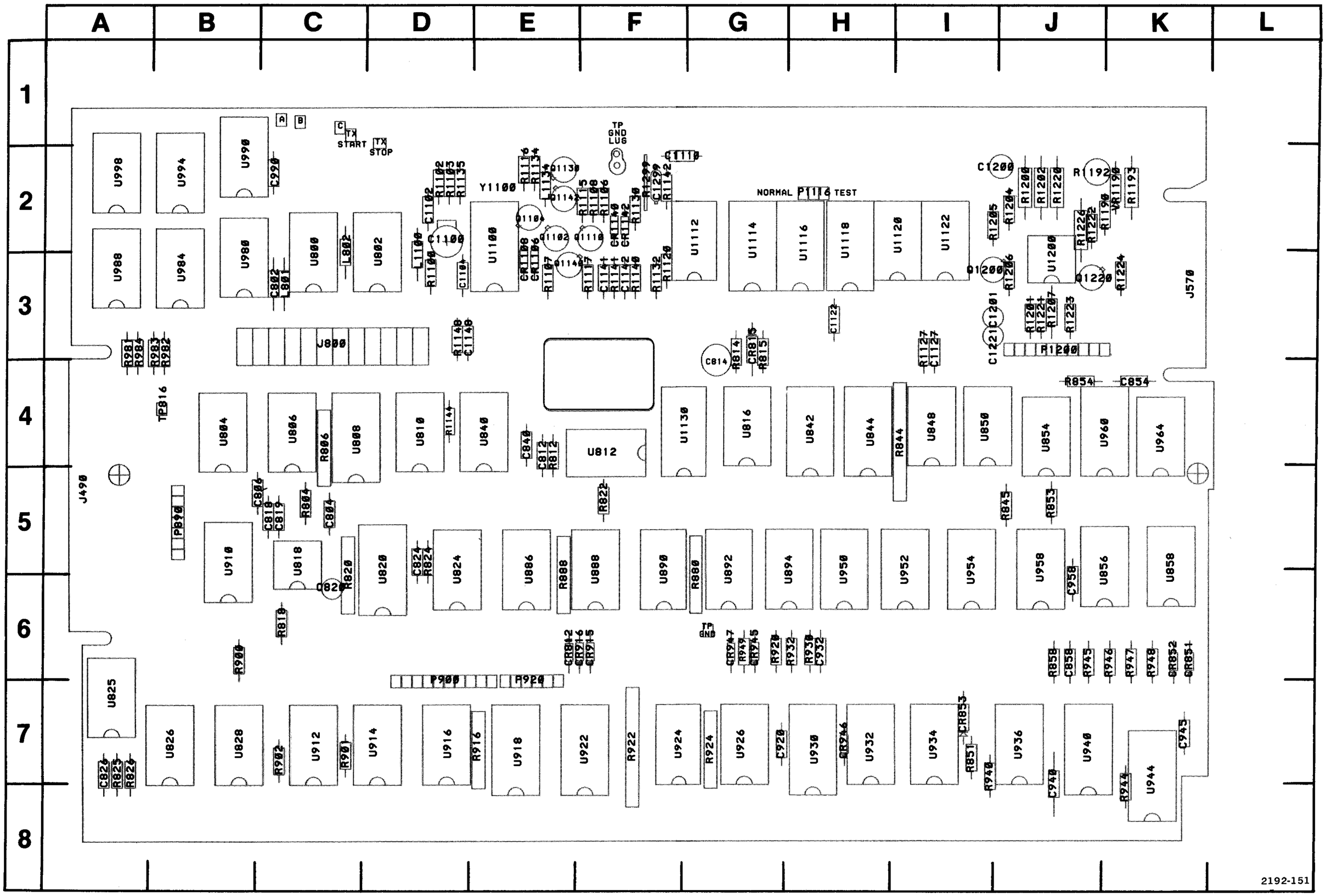

Figure 9-10. A9 Counter board component locations.

CKT NO	GRID LOC	CKT NO	GRID LOC	CKT NO	GRID LOC	CKT NO	GRID LOC
C802	3C	R804	5C	R1222	2J	U1100	2E
C804	5C	R806	4C	R1223	3J	U1112	2G
C806	5B	R812	4E	R1224	3K	U1114	2G
C812	4E	R814	3G	R1226	2J	U1116	2H
C814	3G	R815	3G	R1299	2F	U1118	2H
C818	5C	R818	6C			U1120	2I
C819	5C	R820	5C	TP816	4B	U1122	2I
C820	6C	R822	5F	TP A	1C	U1130	4G
C824	5D	R824	5D	TP B	1C	U1200	3J
C826	7A	R825	7A	TP C	1C		
C840	4E	R826	7A	TP GND	6G	VR1190*	2K
C854	4K	R844	4I	TP GND			
C858	6J	R845	5J	LUG	1F	Y1100	2E
C920	7G	R851	7I	TP TX			
C932	6H	R853	5J	START	1C		
C940	8J	R854	4J	TP TX			
C945	7K	R858	6J	STOP	1D		
C958	6J	R880	5G				
C990	2C	R888	6E	U800	2C		
C1100	2D	R900	6B	U802	2D		
C1102	2D	R901	7C	U804*	4B		
C1104	3D	R902	7C	U806	4C		
C1110	2F	R916	7E	U808	4C		
C1122	3H	R920	6G	U810	4D		
C1127	3I	R922	7F	U812	4F		
C1141	3F	R924	7G	U816	4G		
C1142	3F	R930	6H	U818	5C		
C1148	3D	R932	6H	U820	5D		
C1200	2I	R940	7I	U824	5D		
C1201	3I	R944	8K	U825	7A		
C1221	3I	R945	6J	U826	7B		
C1299	2F	R946	6K	U828	7B		
		R947	6K	U840	4E		
CR812	6E	R948	6K	U842	4H		
CR815	3G	R949	6G	U844	4H		
CR851	6K	R981	3A	U848	4I		
CR852	6K	R982	3B	U850	4I		
CR853	7I	R983	3B	U854	4J		
CR915	6F	R984	3A	U856	5K		
CR916	6F	R1100	3D	U858	5K		
CR945	6G	R1102	2D	U886	5E		
CR946	7H	R1103	2D	U888	5F		
CR947	6G	R1106	2F	U890	5F		
CR1106	3E	R1107	3E	U892	6G		
CR1108	3E	R1108	2F	U894	5H		
CR1140	2F	R1115	2F	U910	5B		
CR1142	2F	R1116	2E	U912	7C		
		R1117	3F	U914	7D		
J490	5A	R1120	3F	U916	7D		
J570	3K	R1127	3I	U918	7E		
J800	3C	R1130	2F	U922	7F		
		R1132	3F	U924	7F		
L801	3C	R1134	2E	U926	7G		
L802	2C	R1135	2D	U930	7H		
L1100	2D	R1140	3F	U932	7H		
L1134	2E	R1141	3F	U934	7I		
		R1142	2F	U936	7J		
P890	5B	R1144	4D	U940	7J		
P900	7D	R1148	3D	U944	7K		
P920	7E	R1190*	2K	U950	5H		
P1116	2H	R1192*	2J	U952	5I		
P1200	3J	R1193*	2K	U954	5I		
		R1200	2J	U958	5J		
Q1102	2E	R1201	3J	U960	4K		
Q1104	2E	R1202	2J	U964	4K		
Q1110	2F	R1204	2J	U980	3B		
Q1130	2E	R1205	2I	U984	3B		
Q1140	3E	R1206	3J	U988	3A		
Q1142	2E	R1207	3J	U990	2B		
Q1200	3I	R1220	2J	U994	2B		
Q1220	3J	R1221	3J	U998	2A		

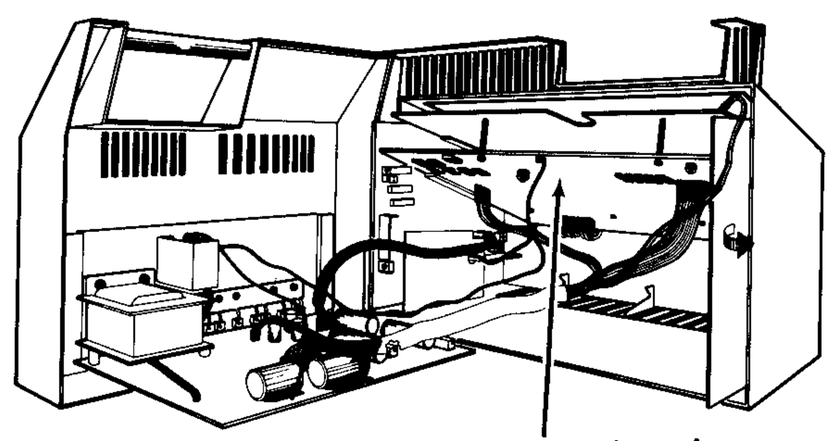

*See Parts List for serial number ranges.

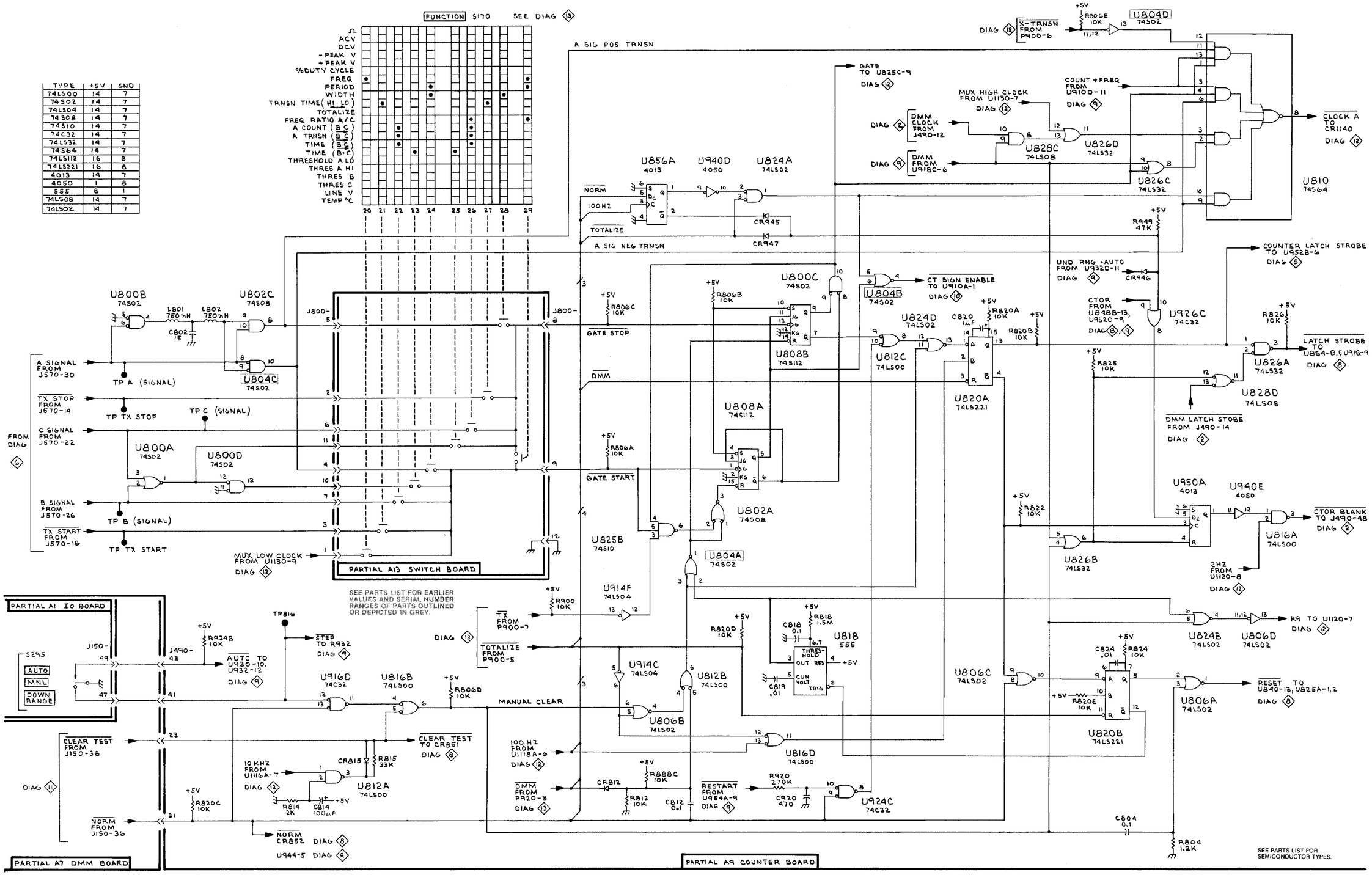

TYPE	+5V	GND
74LS00	14	7
74S02	14	7
74LS04	14	7
74S08	14	7
74S10	14	7
74C32	14	7
74LS32	14	7
74S64	14	7
74LS112	16	8
74LS221	16	8
4013	14	7
4050	1	8
555	8	1
74LS08	14	7
74LS02	14	7

2192-131
REV A OCT 1978

COUNTER GATE LOGIC
PARTIAL COUNTER SOURCE SELECTION LOGIC 7
LATE

TYPE	+5V	GND
74LS00	14	7
74S02	14	7
74LS04	14	7
74S08	14	7
74S10	14	7
74C32	14	7
74LS32	14	7
74S64	14	7
74LS112	16	8
74LS221	16	8
4013	14	7
4050	1	8
555	8	1
74LS08	14	7
74LS02	14	7

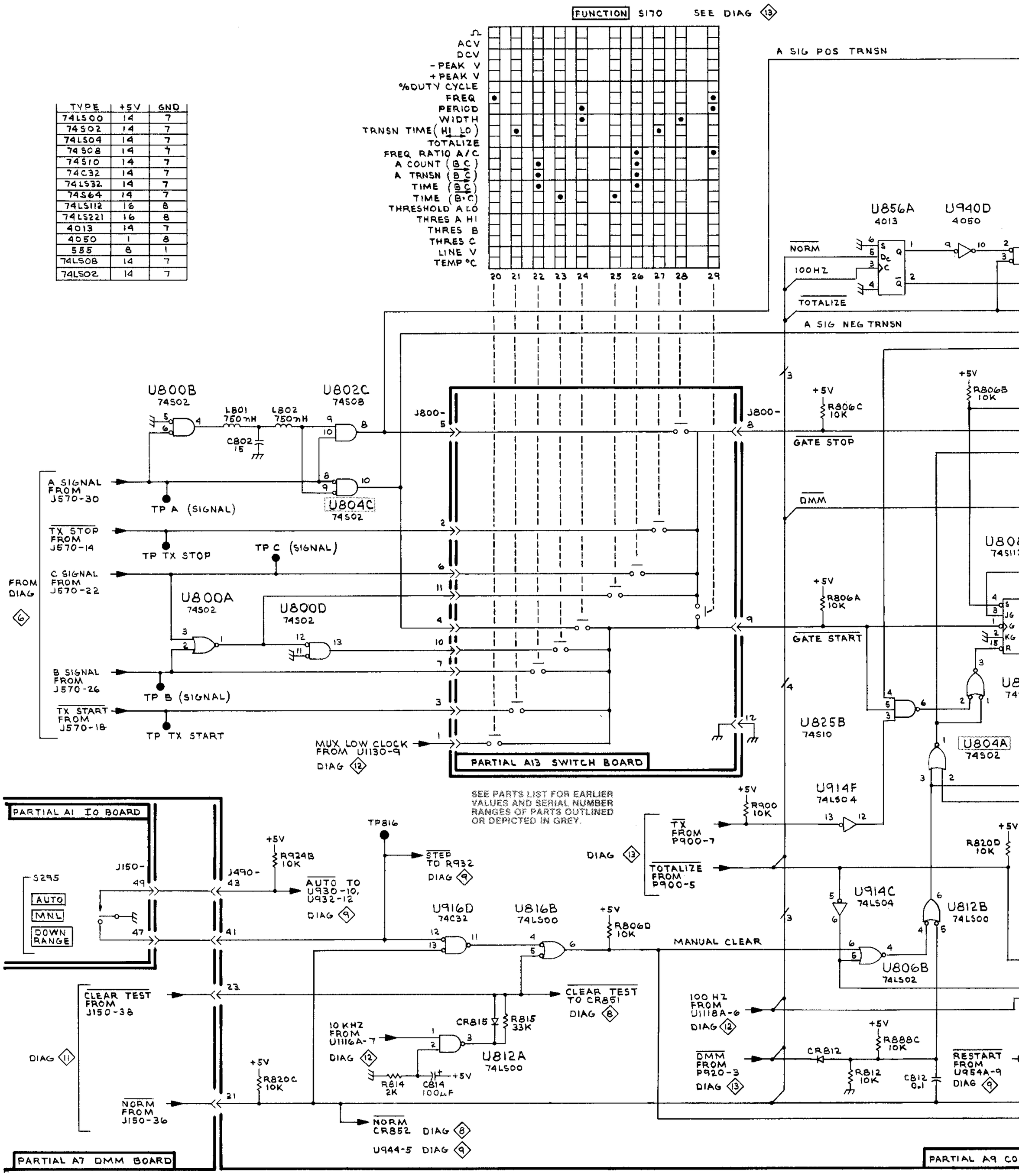

SEE PARTS LIST FOR EARLIER VALUES AND SERIAL NUMBER RANGES OF PARTS OUTLINED OR DEPICTED IN GREY.

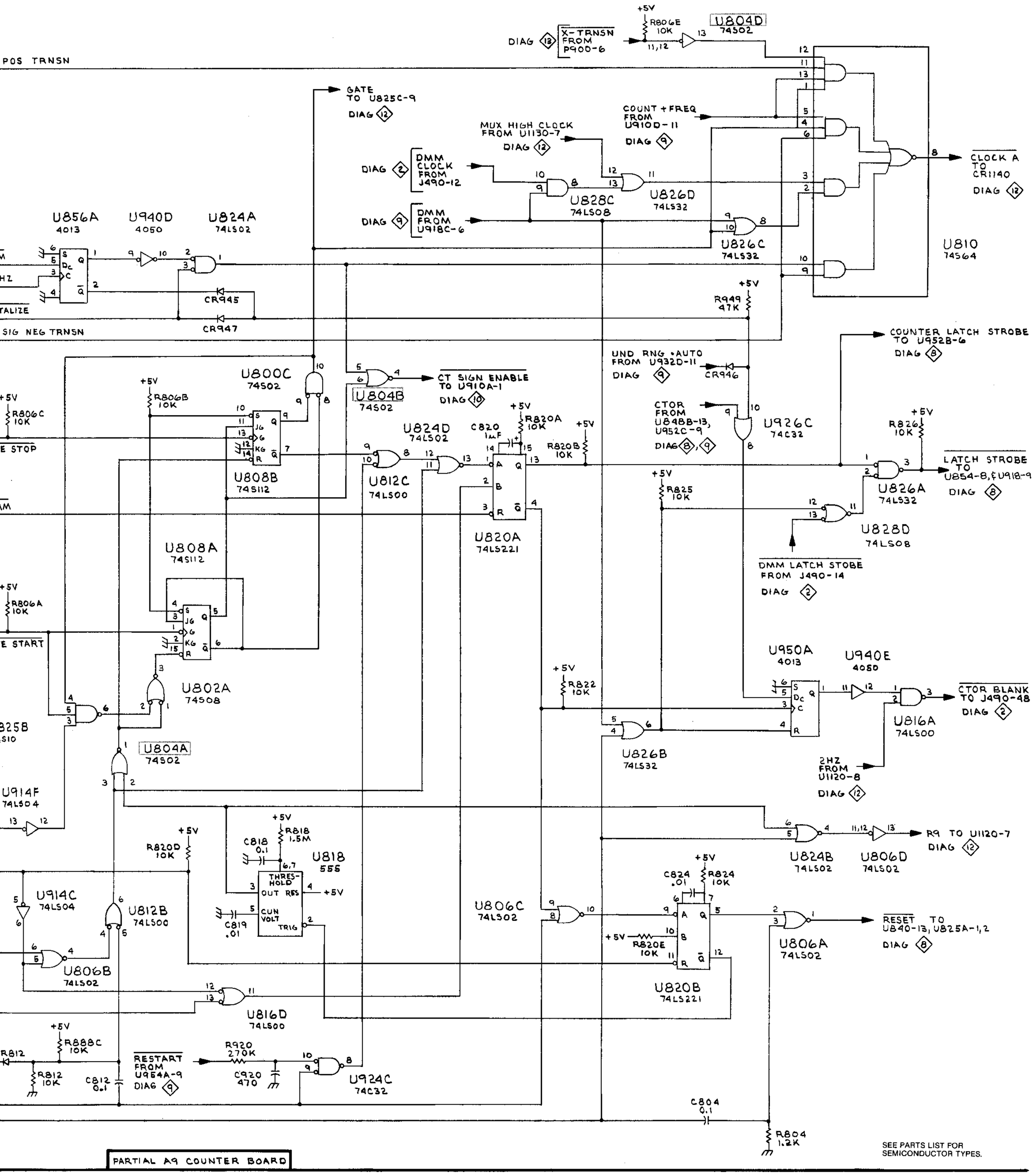

SEE PARTS LIST FOR SEMICONDUCTOR TYPES.

2192-131
REV A, OCT 1978

COUNTER GATE LOGIC
PARTIAL COUNTER SOURCE SELECTION LOGIC 7
LATE

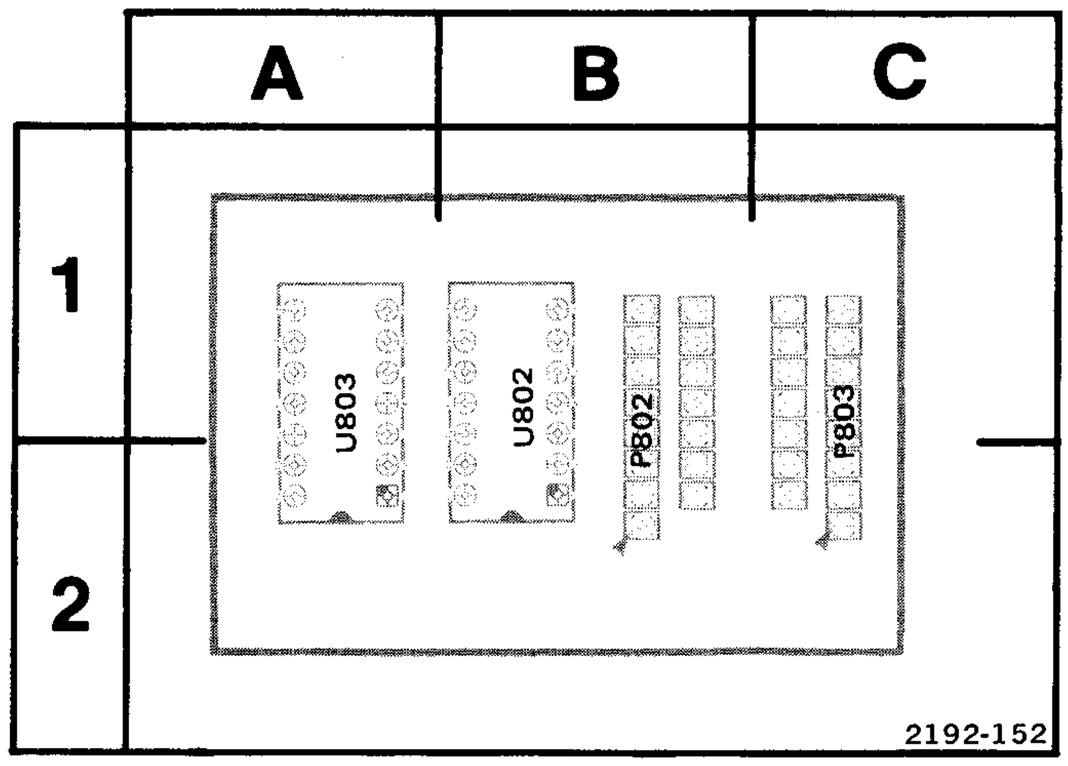

Figure 9-11. A8 Edge Trigger board component locations (SN B010100-B020549).

CKT NO	GRID LOC
P802	1B
P803	1C
U802	1B
U803	1A

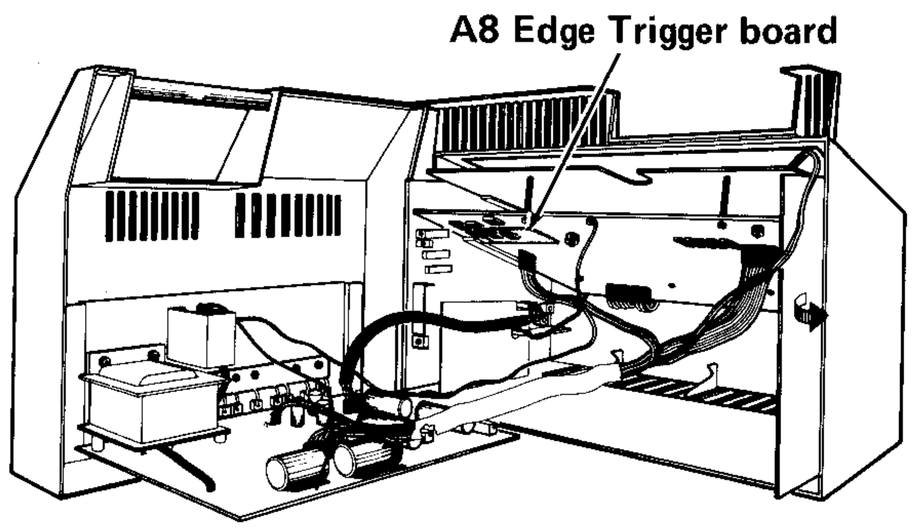

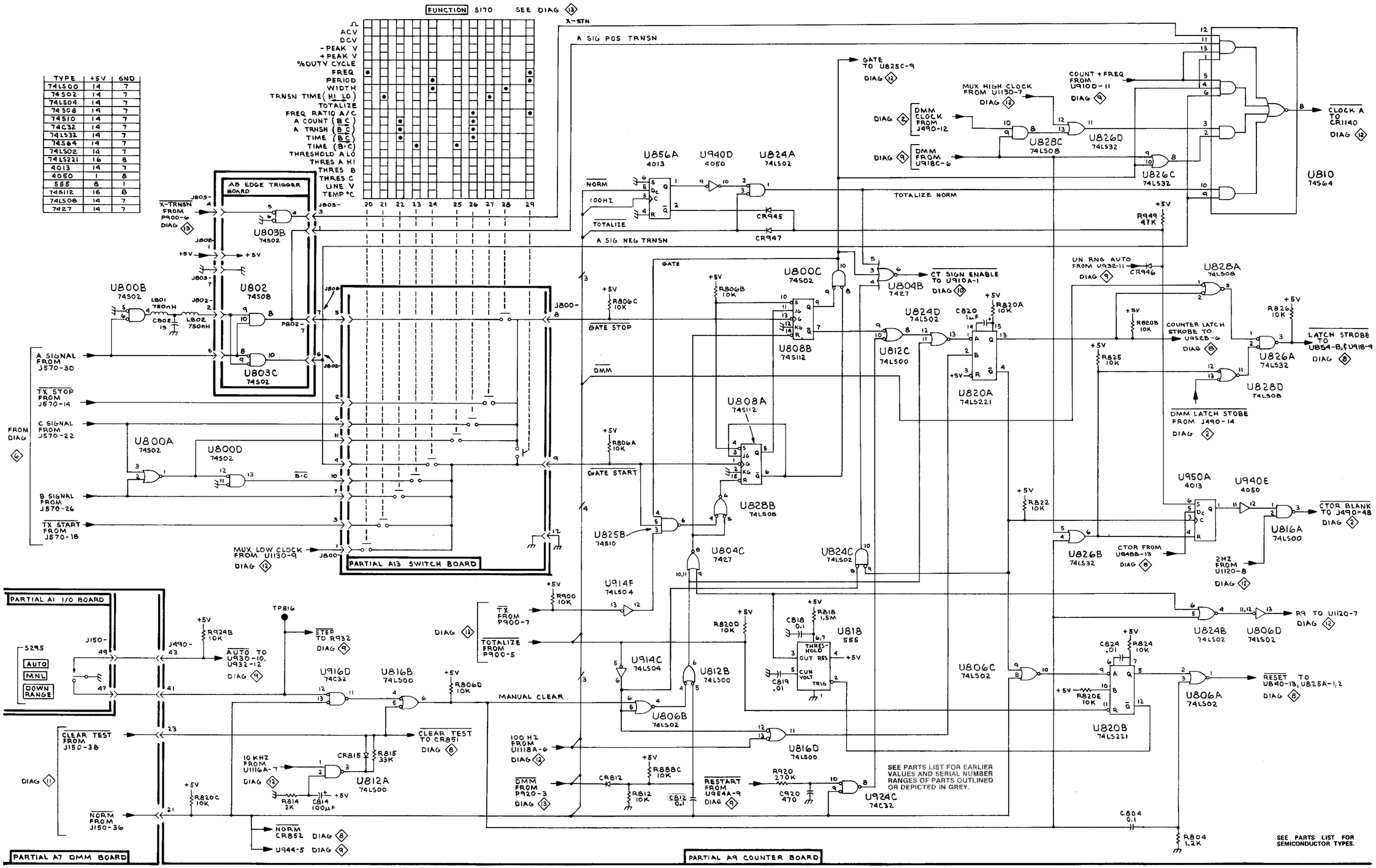

TYPE	+5V	GND
74LS00	14	7
74S02	14	7
74LS04	14	7
74S08	14	7
74S10	14	7
74C32	14	7
74LS32	14	7
74S64	14	7
74LS02	14	7
74LS221	16	8
4013	14	7
4050	1	8
555	8	1
74S112	16	8
74LS08	14	7
7427	14	7

2192-
@, OCT 1978

COUNTER GATE LOGIC
PARTIAL COUNTER SOURCE SELECTION LOGIC 7
EARLY

TYPE	+5V	GND
74LS00	14	7
74S02	14	7
74LS04	14	7
74S08	14	7
74S10	14	7
74C32	14	7
74LS32	14	7
74S64	14	7
74LS02	14	7
74LS221	16	8
4013	14	7
4050	1	8
555	8	1
74S112	16	8
74LS08	14	7
7427	14	7

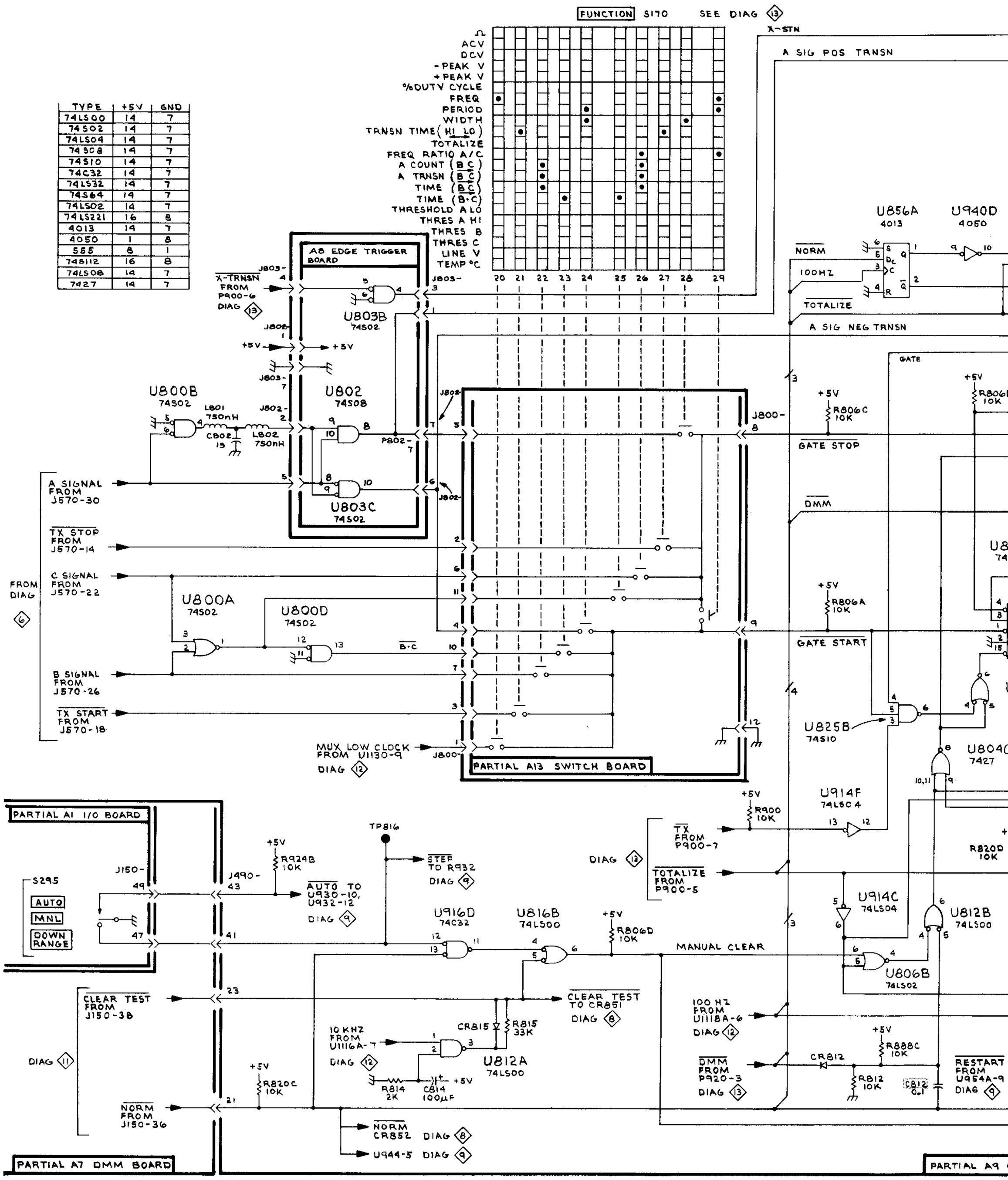

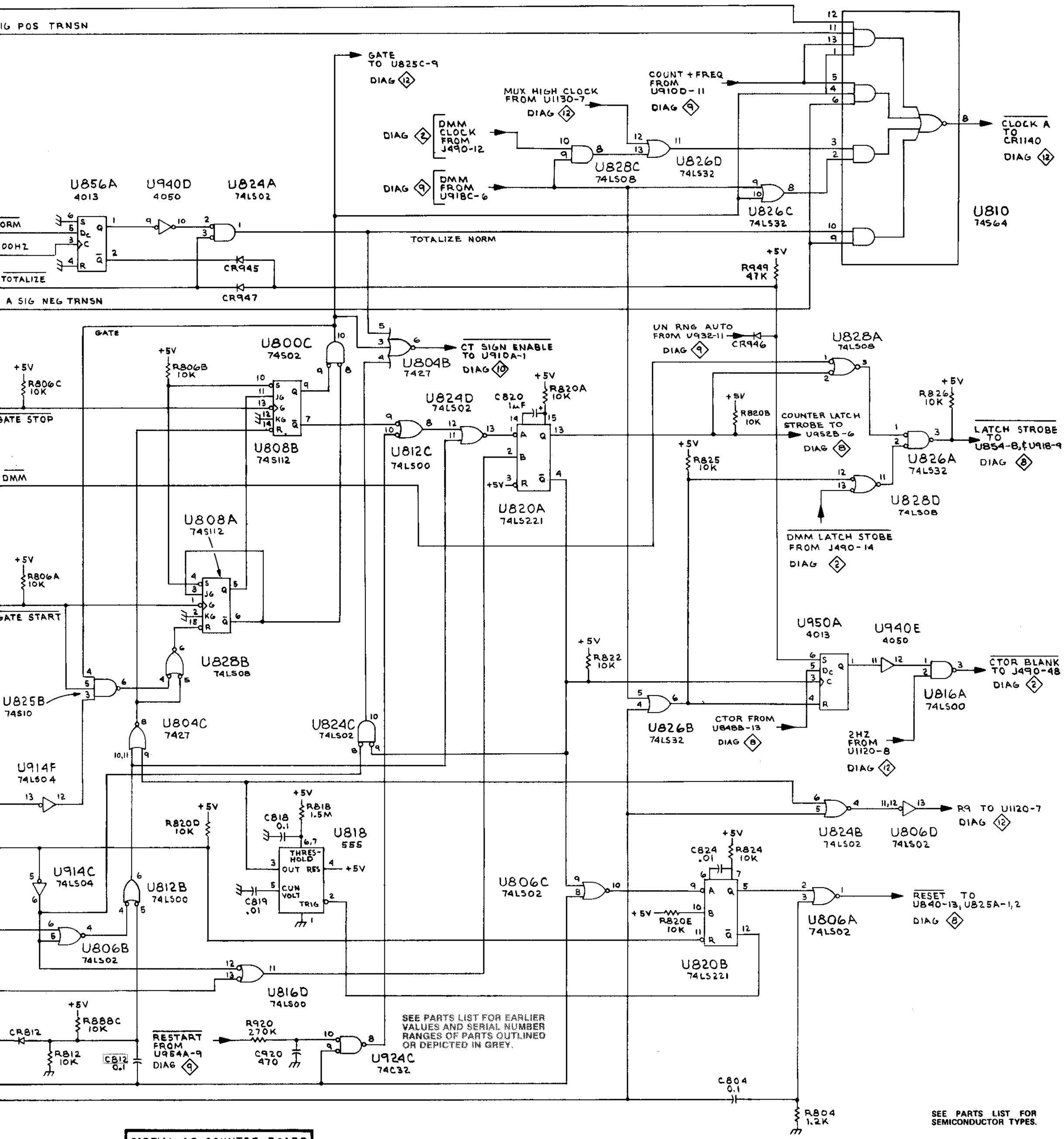

SEE PARTS LIST FOR EARLIER VALUES AND SERIAL NUMBER RANGES OF PARTS OUTLINED OR DEPICTED IN GREY.

SEE PARTS LIST FOR SEMICONDUCTOR TYPES.

PARTIAL A9 COUNTER BOARD

2192-
@, OCT 1978

COUNTER GATE LOGIC
PARTIAL COUNTER SOURCE SELECTION LOGIC 7
EARLY

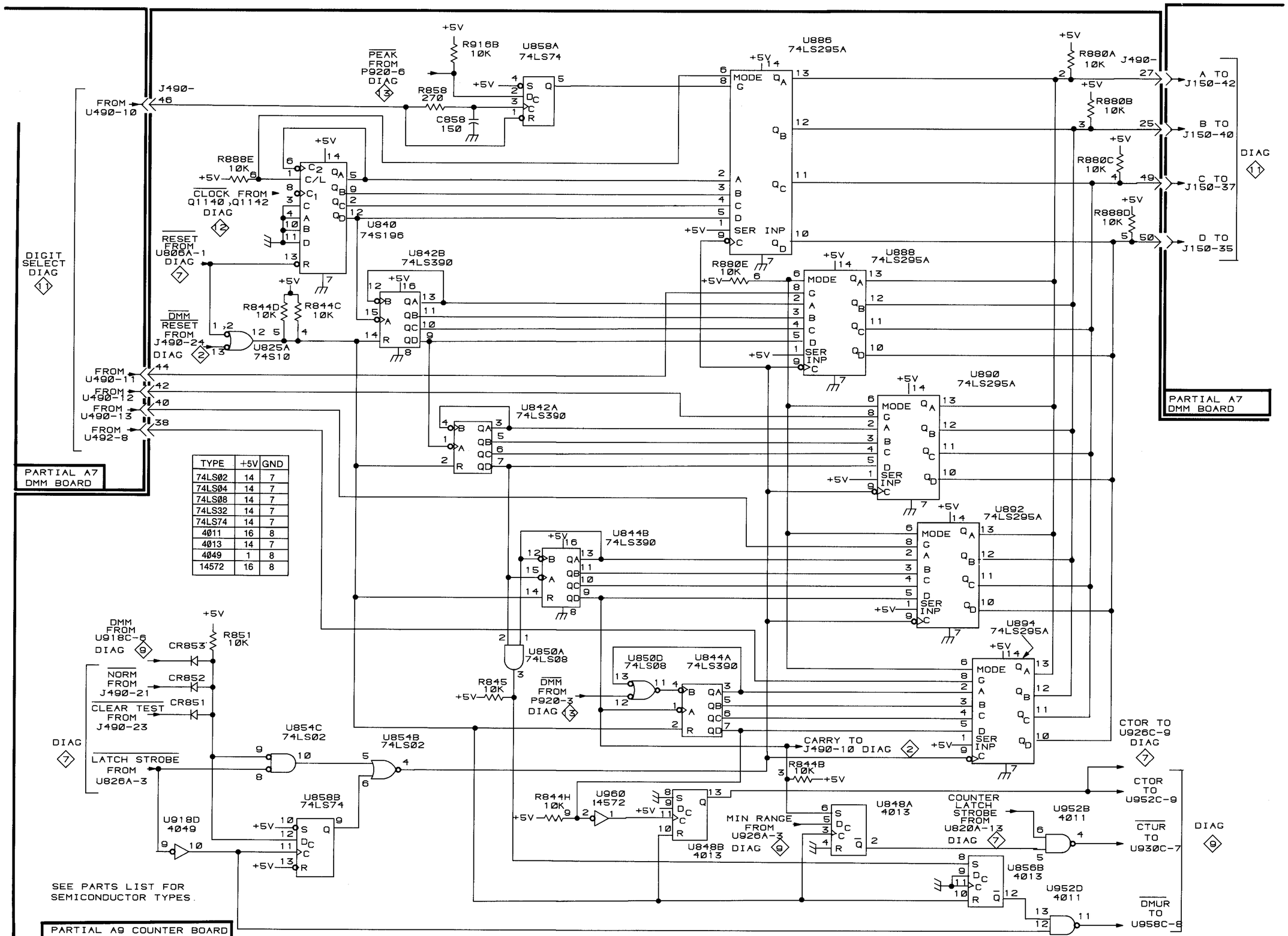

TYPE	+5V	GND
74LS02	14	7
74LS04	14	7
74LS08	14	7
74LS32	14	7
74LS74	14	7
4011	16	8
4013	14	7
4049	1	8
14572	16	8

2192-132
REV B JUL 1979

COUNTERS AND LATCHES 8

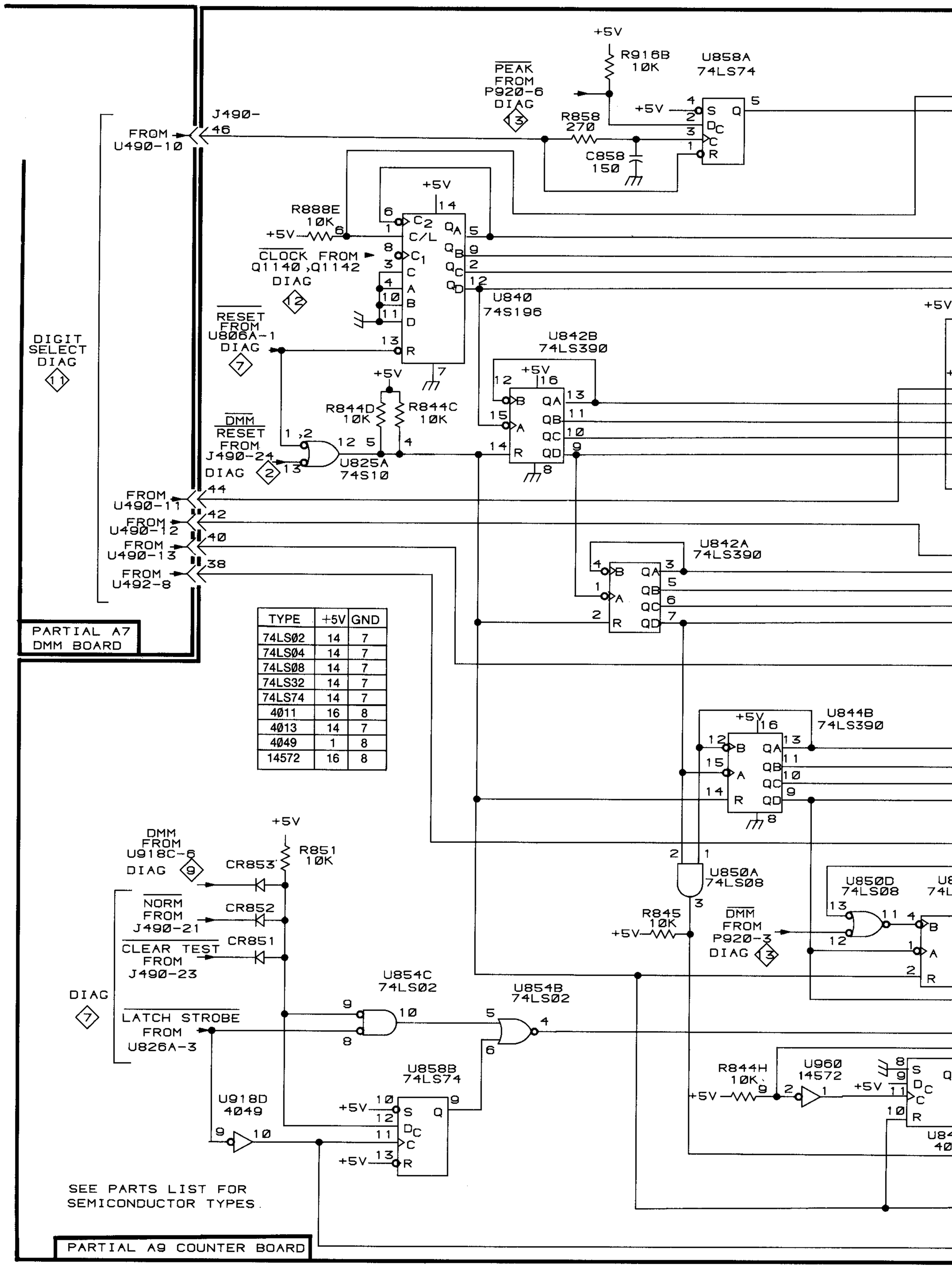

TYPE	+5V	GND
74LS02	14	7
74LS04	14	7
74LS08	14	7
74LS32	14	7
74LS74	14	7
4011	16	8
4013	14	7
4049	1	8
14572	16	8

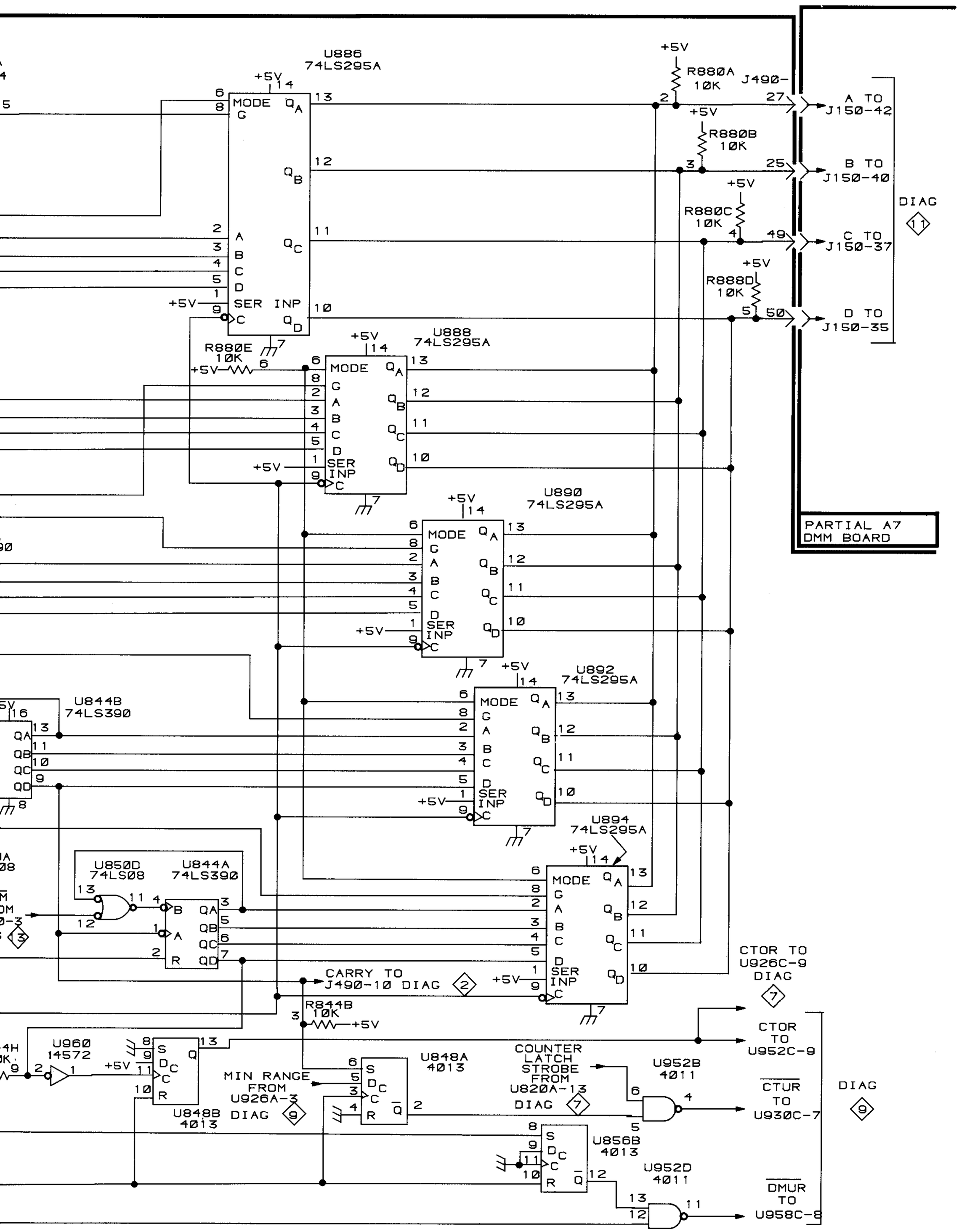

2192-132
REV B JUL 1979

COUNTERS AND LATCHES

8

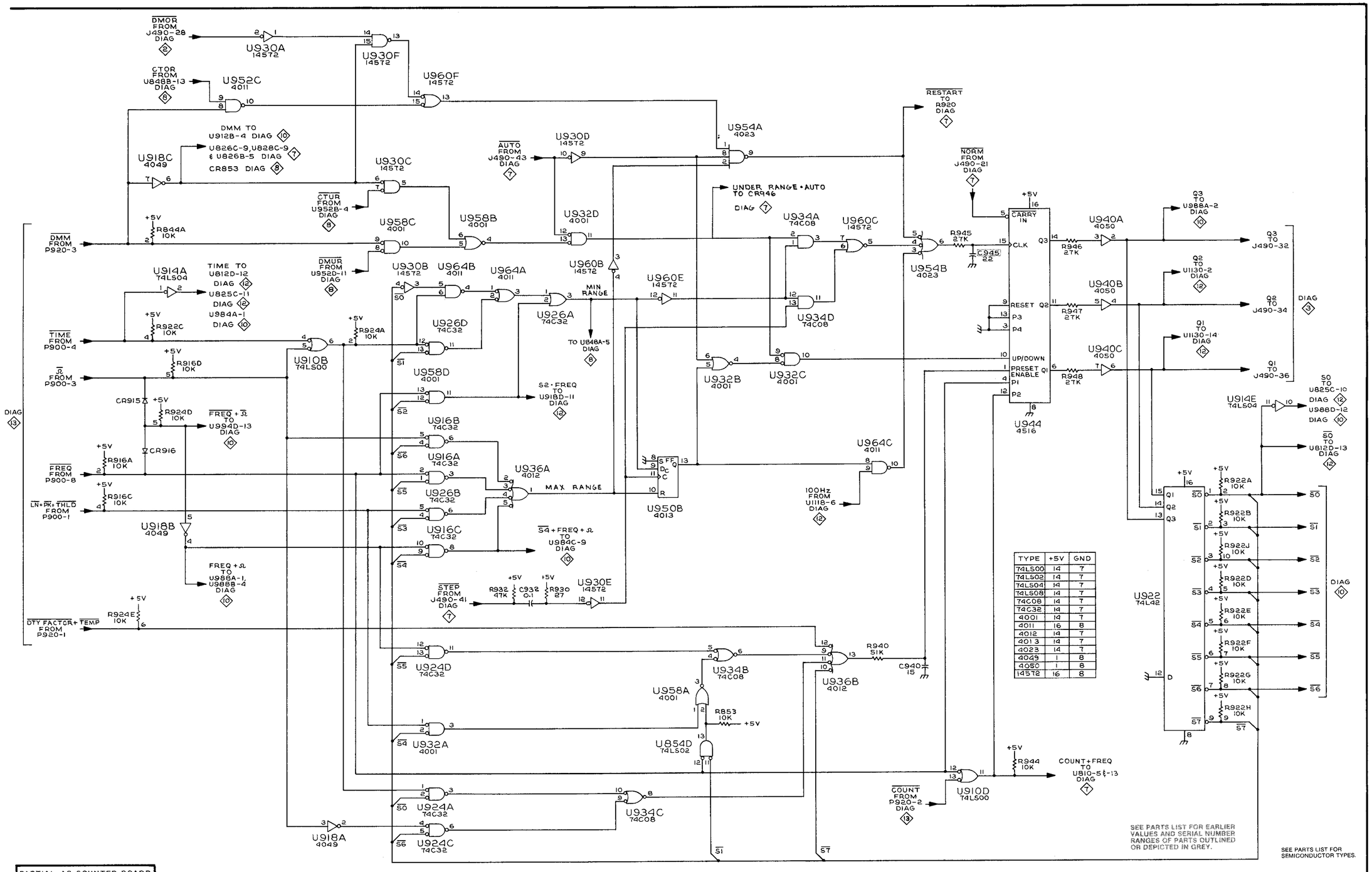

TYPE	+5V	GND
74LS00	14	7
74LS02	14	7
74LS04	14	7
74LS08	14	7
74C08	14	7
74C32	14	7
4001	14	7
4011	16	8
4012	14	7
4013	14	7
4023	14	7
4049	1	8
4050	1	8
14572	16	8

SEE PARTS LIST FOR EARLIER VALUES AND SERIAL NUMBER RANGES OF PARTS OUTLINED OR DEPICTED IN GREY.

SEE PARTS LIST FOR SEMICONDUCTOR TYPES.

PARTIAL A9 COUNTER BOARD

2192-133 REV A, OCT 1978

AUTORANGE LOGIC 9

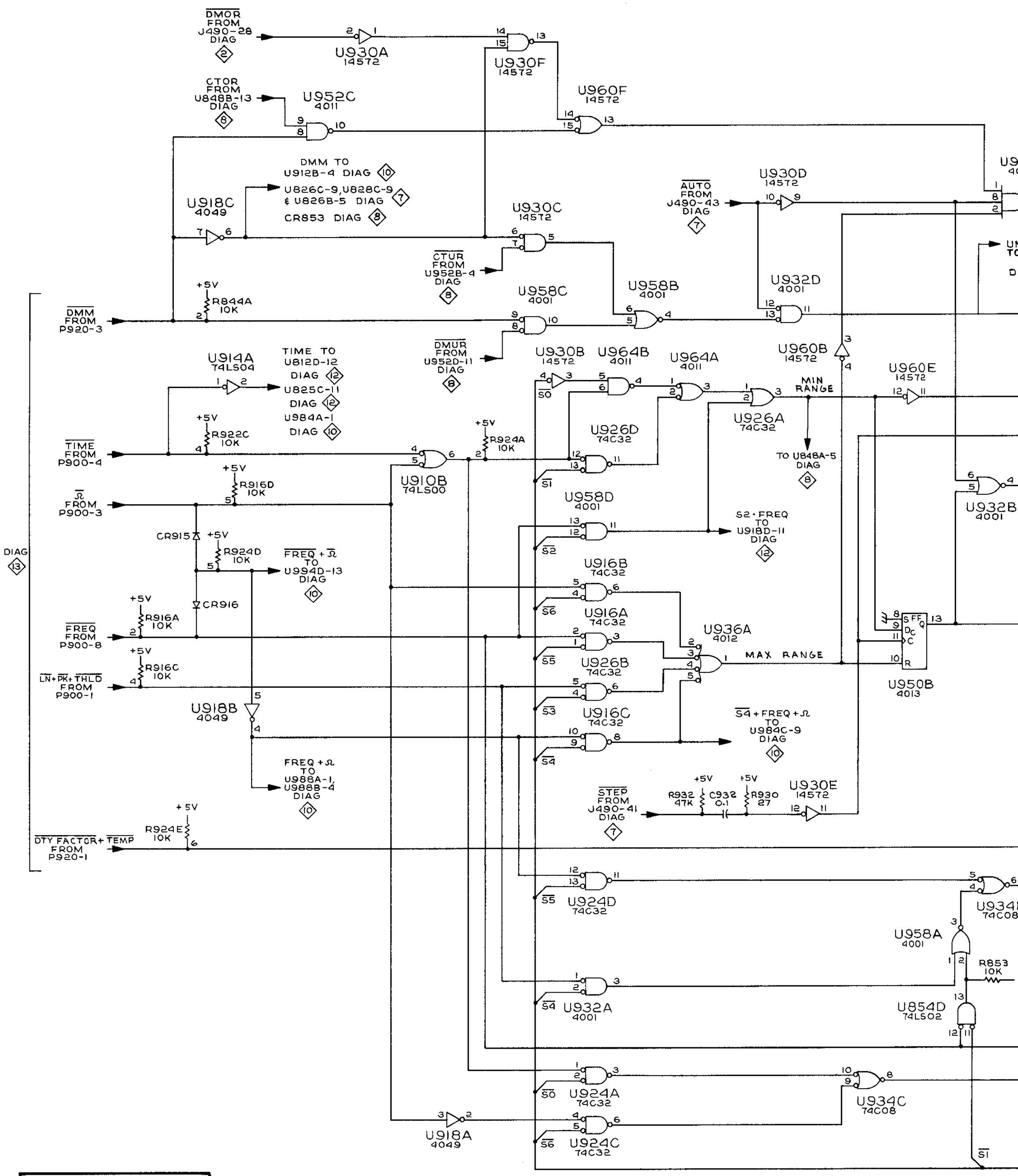

PARTIAL A9 COUNTER BOARD

2192-13

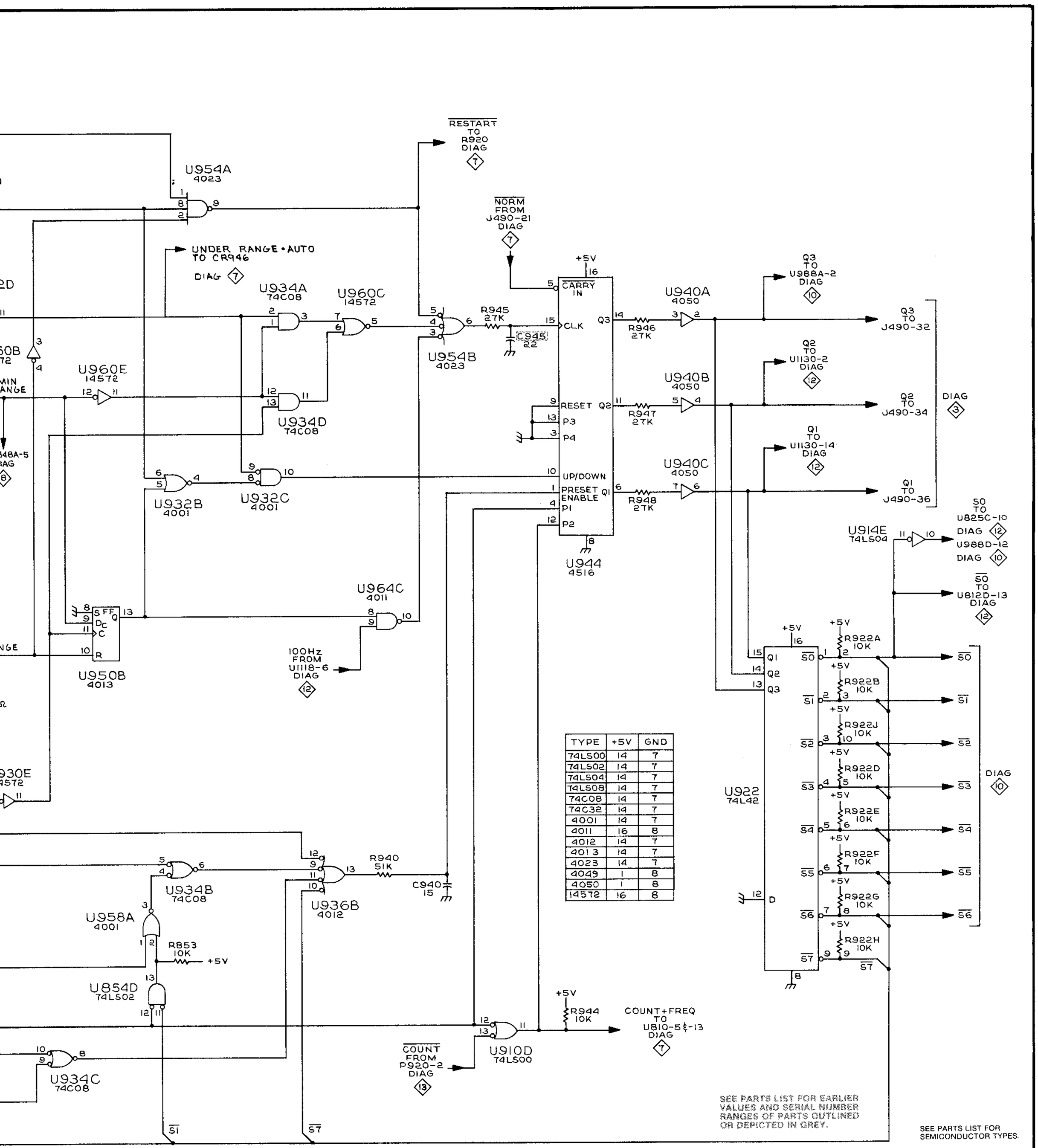

TYPE	+5V	GND
74LS00	14	7
74LS02	14	7
74LS04	14	7
74LS08	14	7
74C08	14	7
74C32	14	7
4001	14	7
4011	16	8
4012	14	7
4013	14	7
4023	14	7
4049	1	8
4050	1	8
14572	16	8

AUTORANGE LOGIC 9

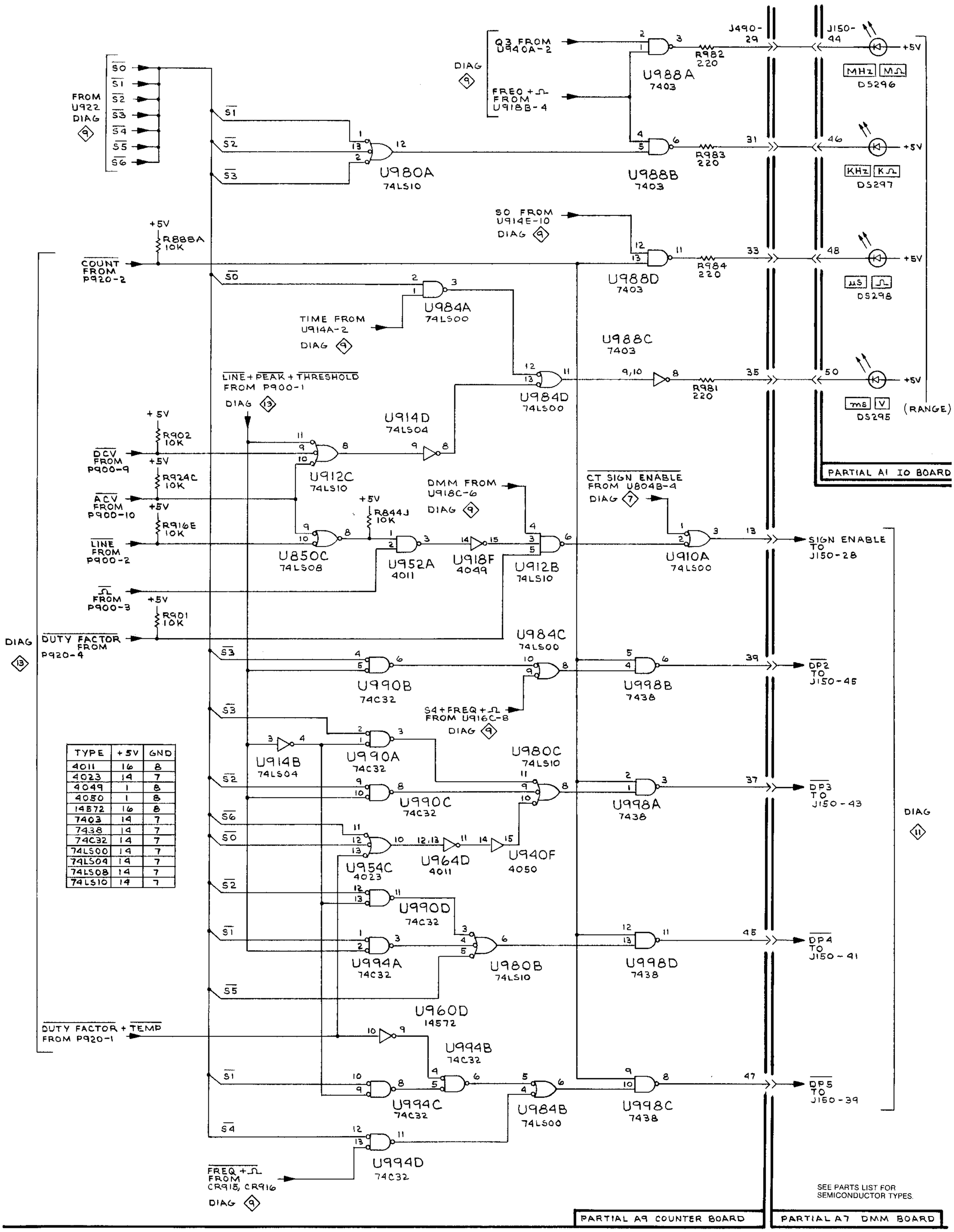

TYPE	+5V	GND
4011	16	8
4023	14	7
4049	1	8
4050	1	8
14572	16	8
7403	14	7
7438	14	7
74C32	14	7
74LS00	14	7
74LS04	14	7
74LS08	14	7
74LS10	14	7

2192-134
REV A, OCT 1978

RANGE INDICATION LOGIC
DECIMAL POINT LOGIC
10

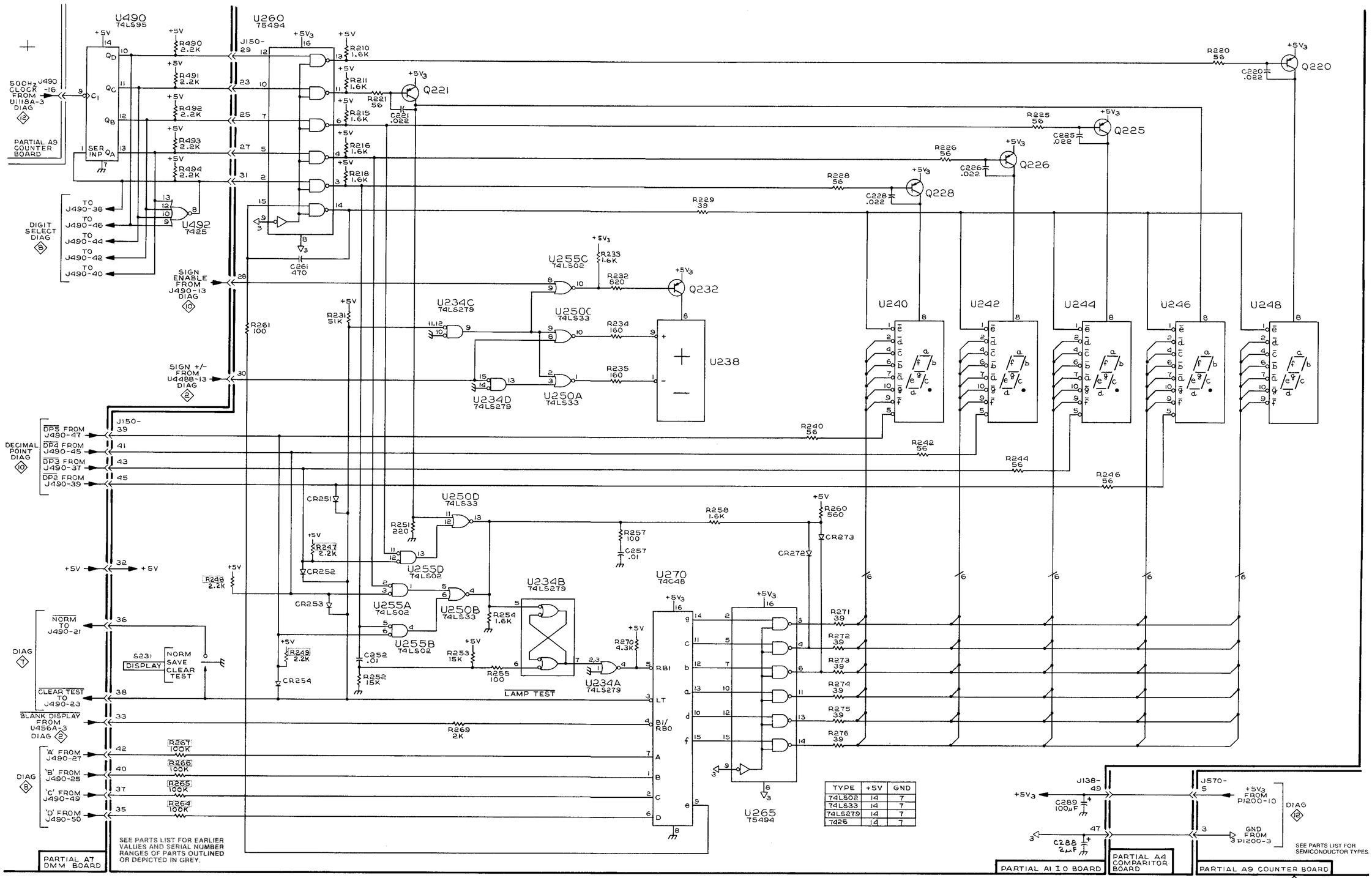

TYPE	+5V	GND
74LS02	14	7
74LS33	14	7
74LS279	14	7
7425	14	7

2192-135 REV B FEB 1980

DISPLAY 11

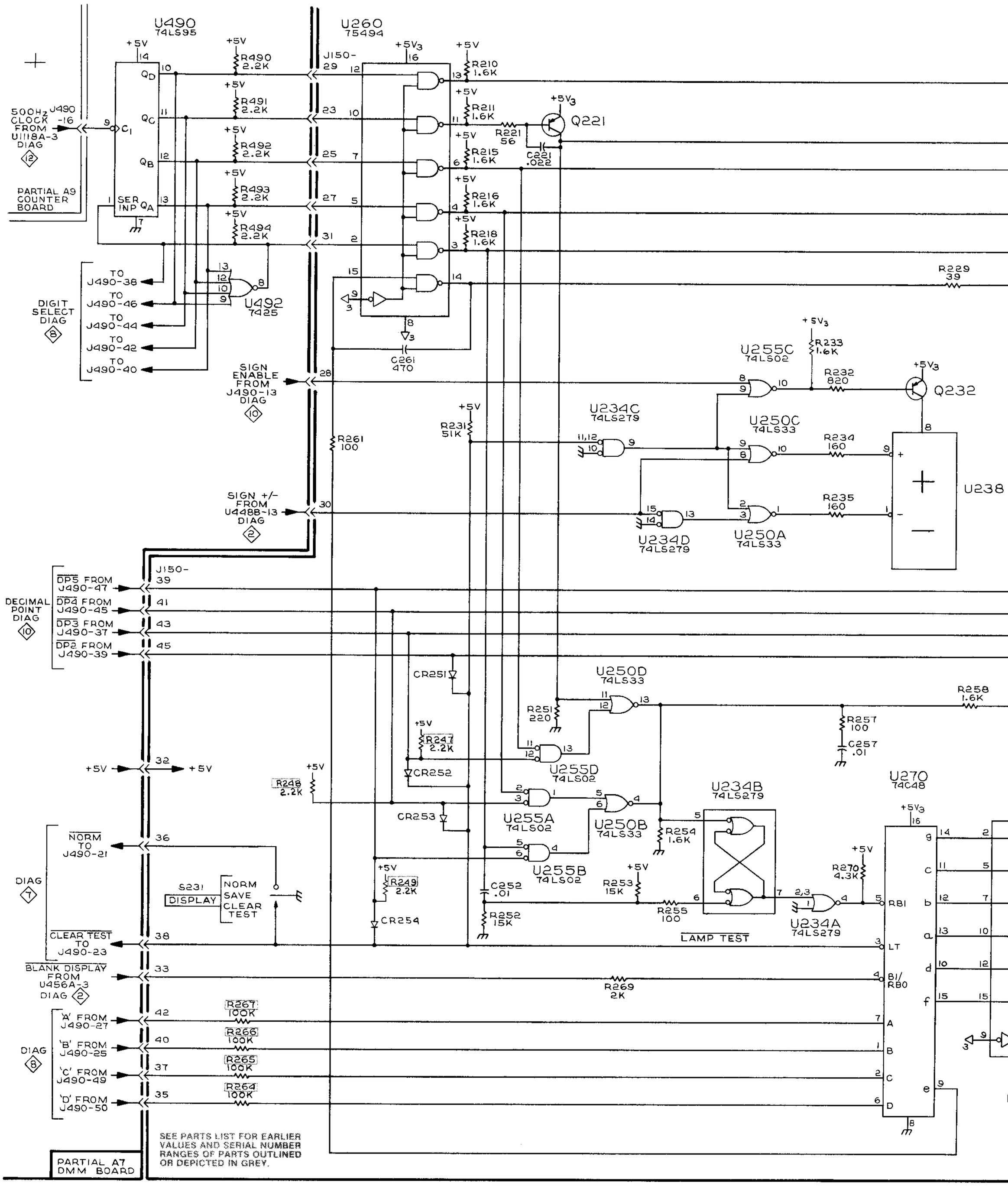
U490
74LS95
U260
75494
500Hz CLOCK FROM U1118A-3 DIAG 12
J490 -16
PARTIAL A9 COUNTER BOARD
SER INP
DIGIT SELECT DIAG 8
TO J490-38
TO J490-46
TO J490-44
TO J490-42
TO J490-40
U492
7425
SIGN ENABLE FROM J490-13 DIAG 10
SIGN +/- FROM U448B-13 DIAG 2
DECIMAL POINT DIAG 10
DP5 FROM J490-47
DP4 FROM J490-45
DP3 FROM J490-37
DP2 FROM J490-39
NORM TO J490-21
DIAG 7
S231
DISPLAY
NORM
SAVE
CLEAR
TEST
CLEAR TEST TO J490-23
BLANK DISPLAY FROM U456A-3 DIAG 2
DIAG 8
'A' FROM J490-27
'B' FROM J490-25
'C' FROM J490-49
'D' FROM J490-50
PARTIAL A7 DMM BOARD
Q221
Q232
U234C
74LS279
U250C
74LS33
U255C
74LS02
U234D
74LS279
U250A
74LS33
U238
U250D
74LS33
U255D
74LS02
U255A
74LS02
U250B
74LS33
U255B
74LS02
U234B
74LS279
U234A
74LS279
U270
74C48
LAMP TEST
SEE PARTS LIST FOR EARLIER VALUES AND SERIAL NUMBER RANGES OF PARTS OUTLINED OR DEPICTED IN GREY.

2192-135

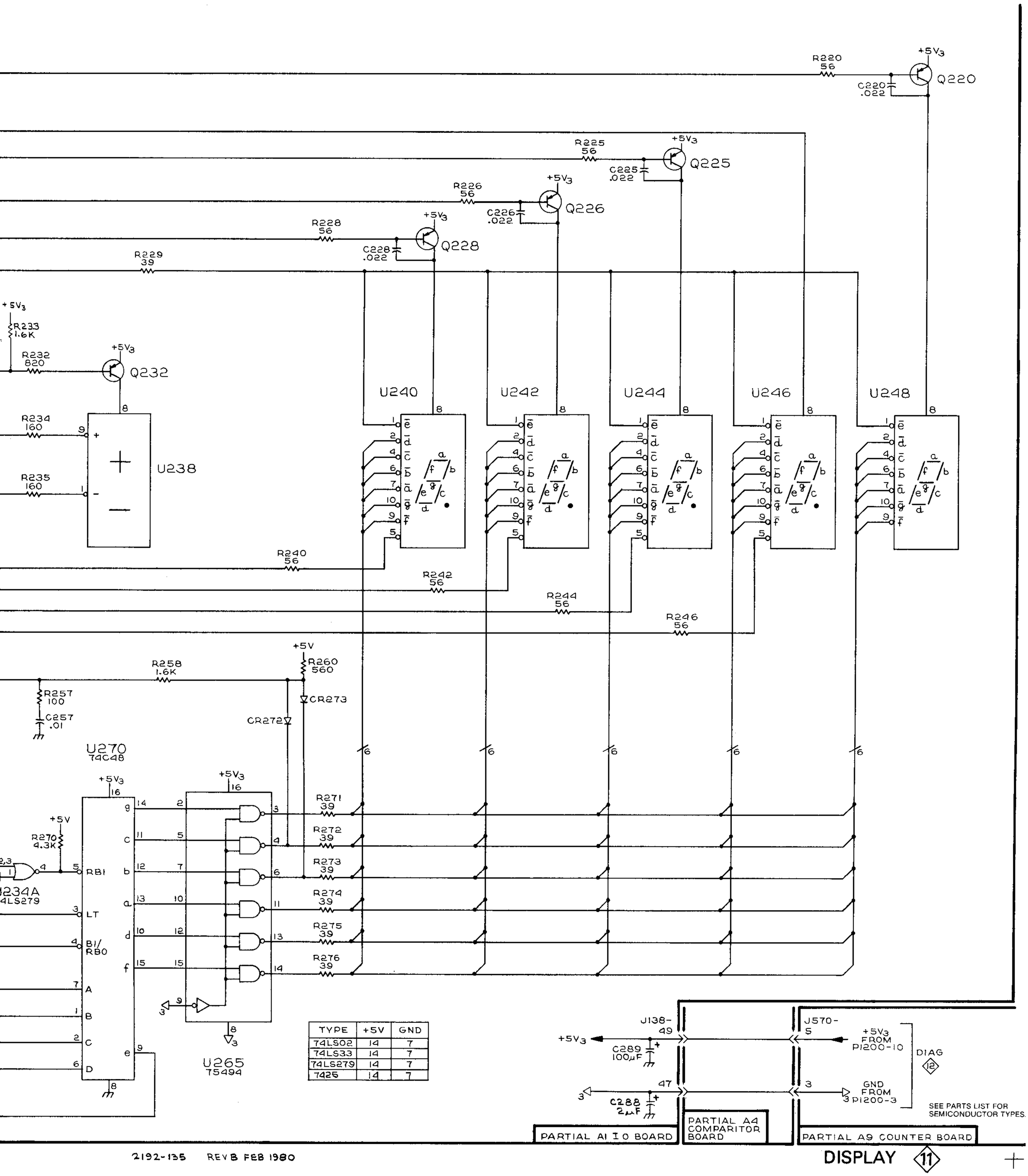

2192-135 REV B FEB 1980

DISPLAY 11

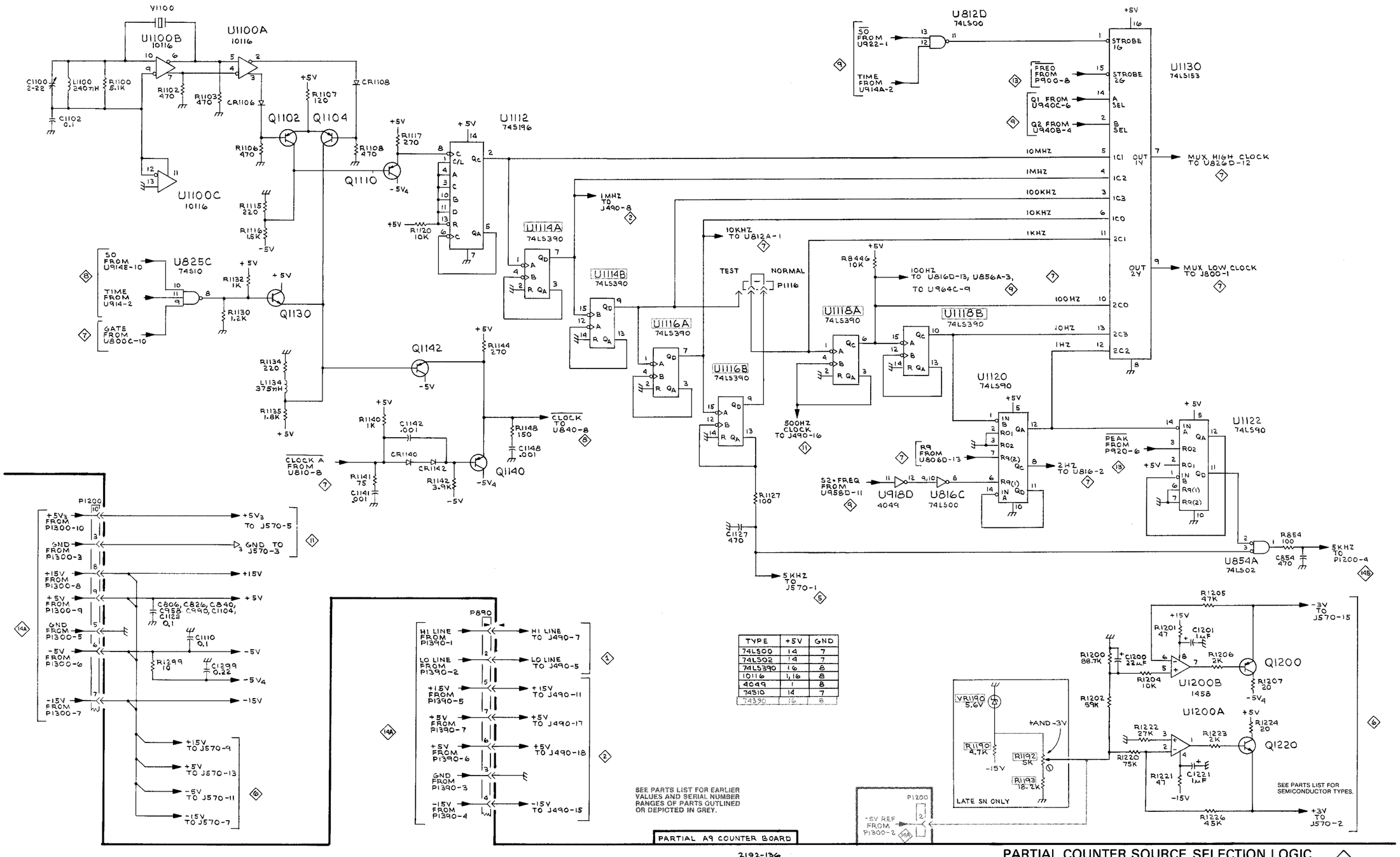

TYPE	+5V	GND
74LS00	14	7
74LS02	14	7
74LS390	16	8
10116	1,16	8
4049	1	8
74S10	14	7
74390	16	8

PARTIAL COUNTER SOURCE SELECTION LOGIC
CLOCK + AND − 3 V REGULATORS

2192-136
REV. B, JULY 1979

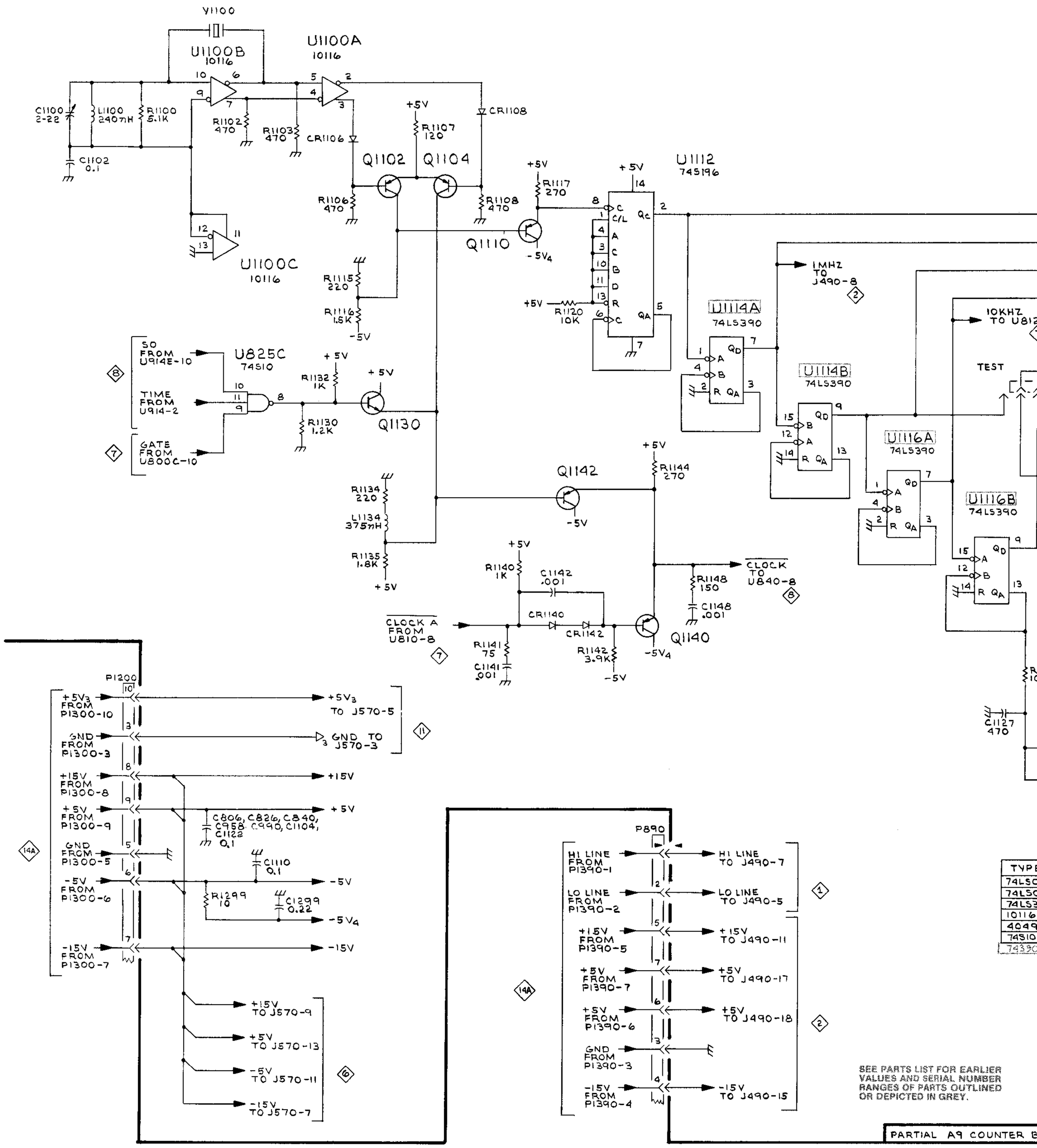
V1100
U1100B
10116
U1100A
10116
C1100
2-22
L1100
240nH
R1100
5.1K
C1102
0.1
R1102
470
R1103
470
CR1106
CR1108
+5V
R1107
120
Q1102
Q1104
R1106
470
R1108
470
R1117
270
Q1110
-5V4
U1100C
10116
R1115
220
R1116
1.5K
-5V
U1112
74S196
+5V
14
C
C/L
Qc
A
C
B
D
R
C
QA
R1120
10K
1MHZ
TO
J490-8
U1114A
74LS390
U1114B
74LS390
10KHZ
TO U812
TEST
U1116A
74LS390
U1116B
74LS390
SO
FROM
U914E-10
TIME
FROM
U914-2
GATE
FROM
U800C-10
U825C
74S10
R1132
1K
R1130
1.2K
Q1130
Q1142
R1144
270
R1134
220
L1134
375nH
R1135
1.8K
R1140
1K
C1142
.001
CR1140
CR1142
R1141
75
C1141
.001
R1142
3.9K
Q1140
R1148
150
C1148
.001
CLOCK
TO
U840-8
CLOCK A
FROM
U810-8
C1127
470
P1200
+5V3
FROM
P1300-10
+5V3
TO J570-5
GND
FROM
P1300-3
GND TO
J570-3
+15V
FROM
P1300-8
+15V
+5V
FROM
P1300-9
+5V
C806, C826, C840,
C958, C990, C1104,
C1122
0.1
GND
FROM
P1300-5
C1110
0.1
-5V
FROM
P1300-6
-5V
R1299
10
C1299
0.22
-5V4
-15V
FROM
P1300-7
-15V
+15V
TO J570-9
+5V
TO J570-13
-5V
TO J570-11
-15V
TO J570-7
P890
HI LINE
FROM
P1390-1
HI LINE
TO J490-7
LO LINE
FROM
P1390-2
LO LINE
TO J490-5
+15V
FROM
P1390-5
+15V
TO J490-11
+5V
FROM
P1390-7
+5V
TO J490-17
+5V
FROM
P1390-6
+5V
TO J490-18
GND
FROM
P1390-3
-15V
FROM
P1390-4
-15V
TO J490-15
SEE PARTS LIST FOR EARLIER
VALUES AND SERIAL NUMBER
RANGES OF PARTS OUTLINED
OR DEPICTED IN GREY.
PARTIAL A9 COUNTER B
2192-
REV. B,

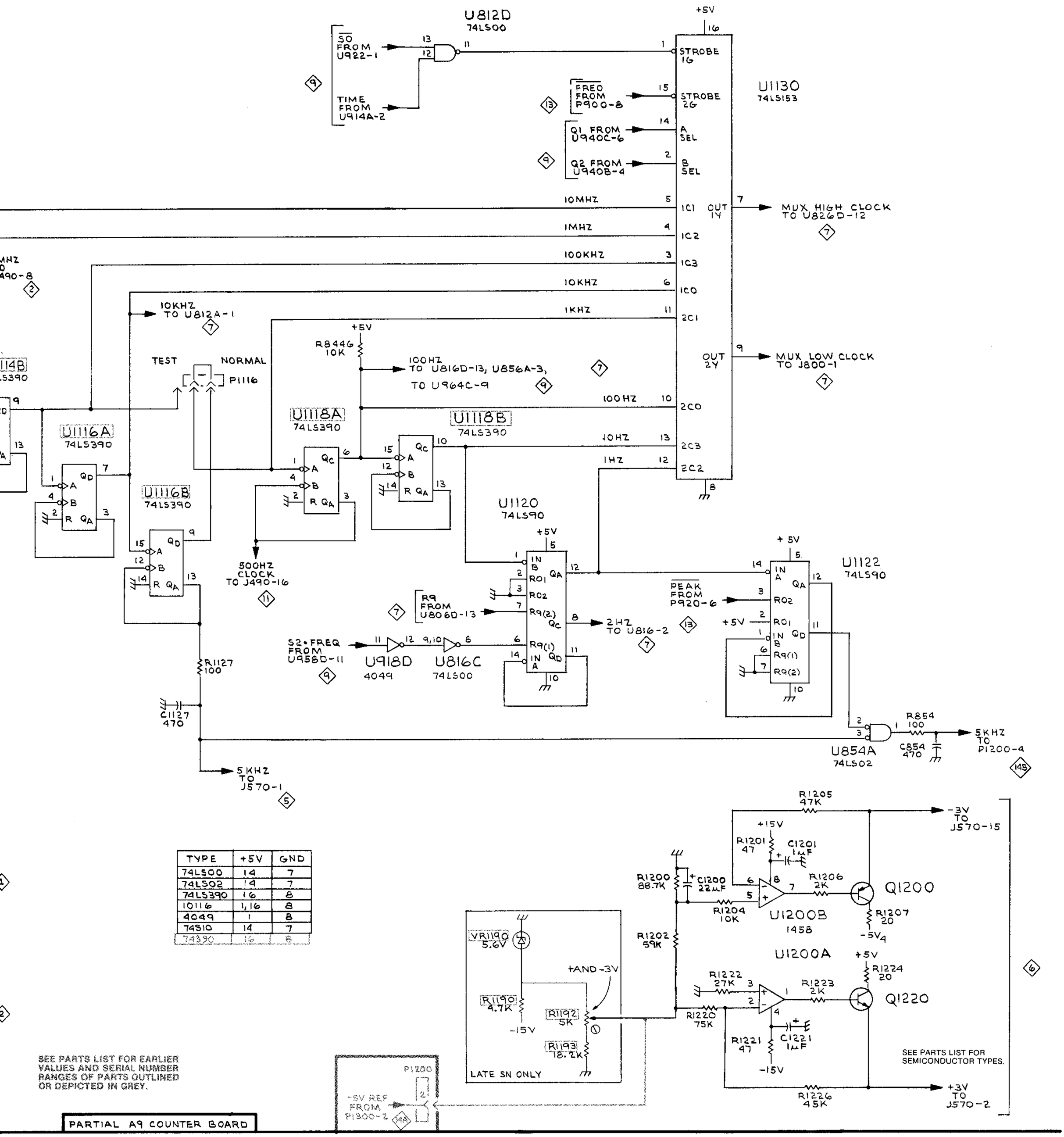

TYPE	+5V	GND
74LS00	14	7
74LS02	14	7
74LS390	16	8
10116	1,16	8
4049	1	8
74S10	14	7
74390	16	8

2192-136
REV. B, JULY 1979

PARTIAL COUNTER SOURCE SELECTION LOGIC CLOCK + AND − 3 V REGULATORS

12

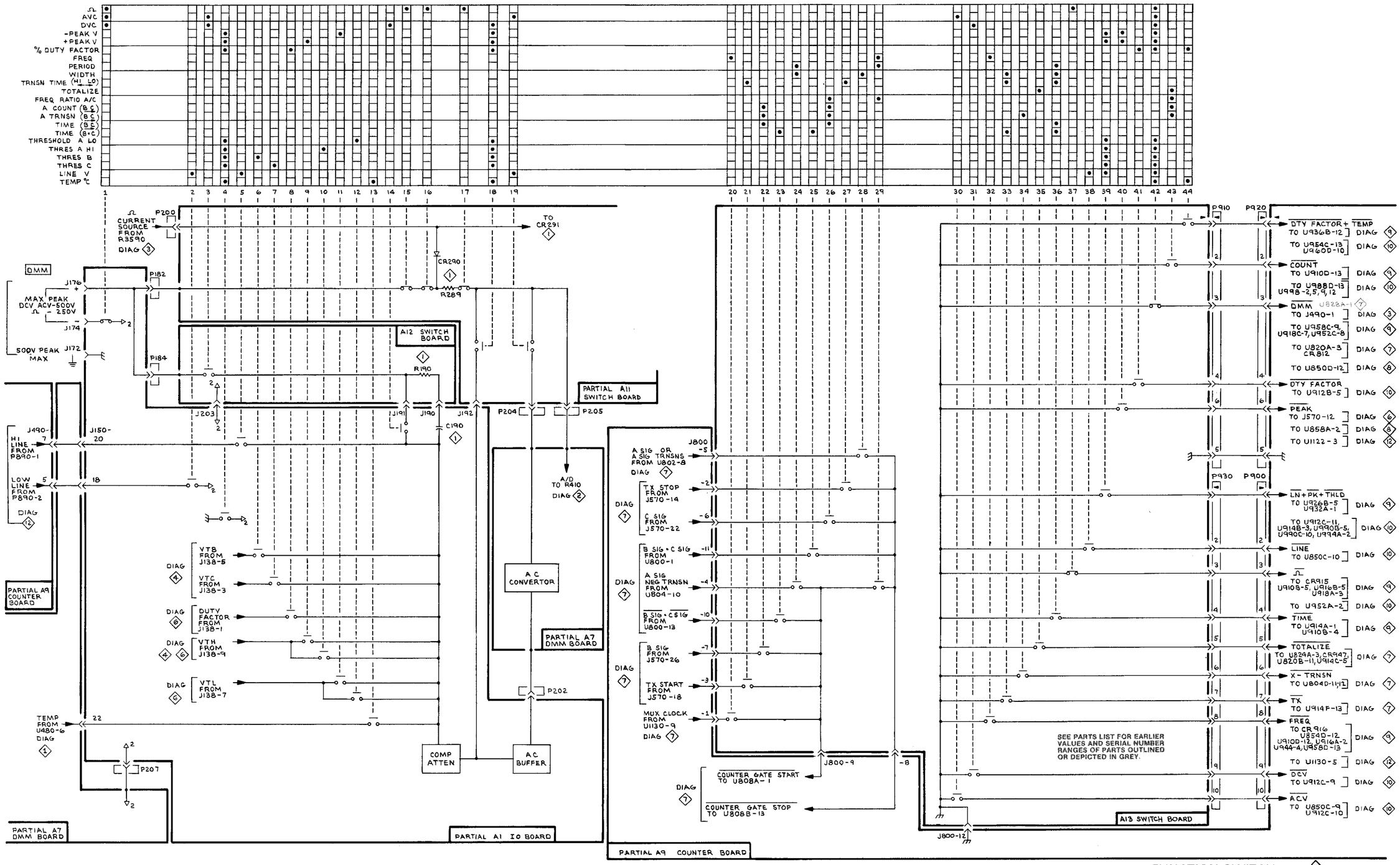

2192-137
REV A, OCT 1978

FUNCTION SWITCH 13

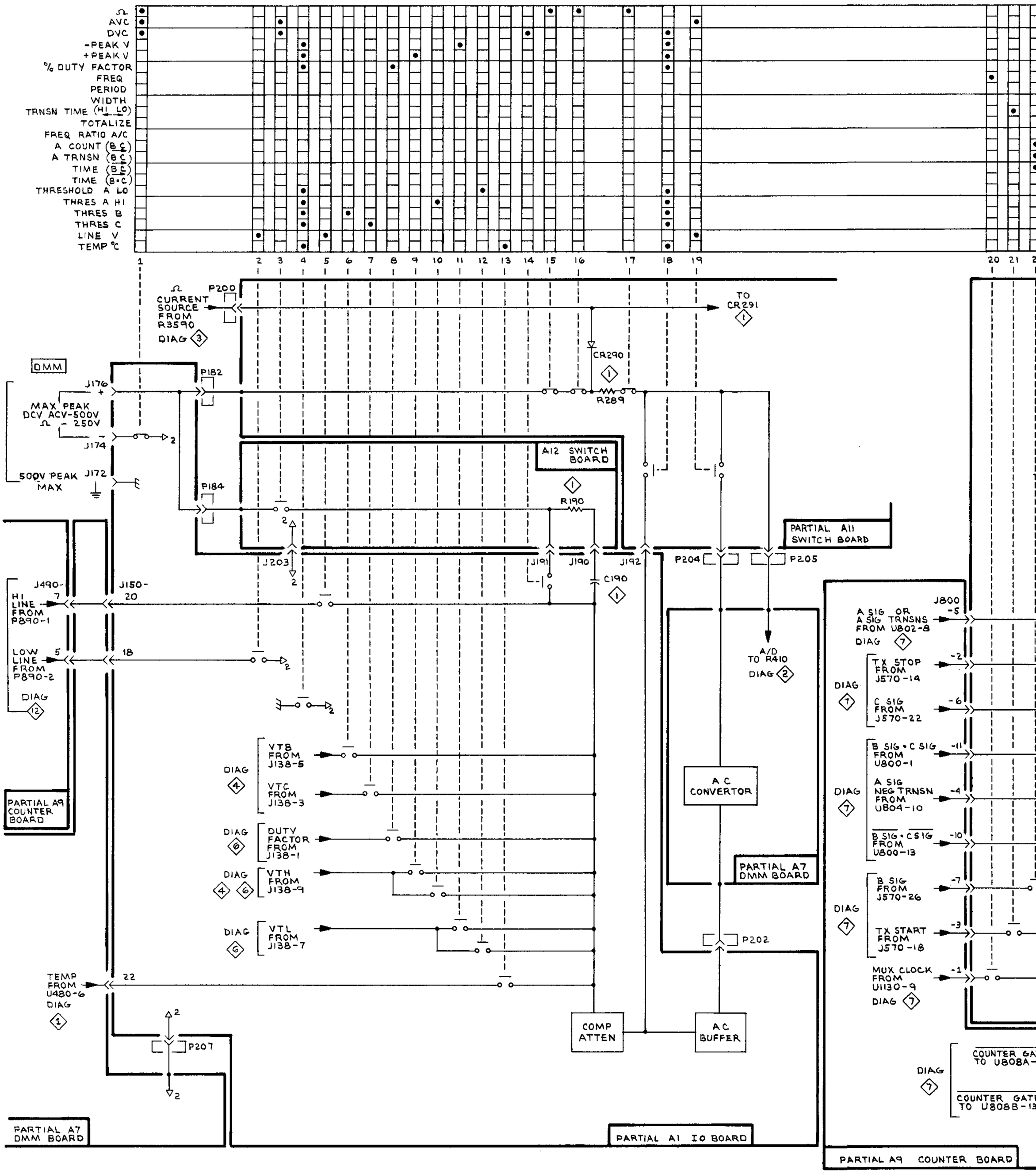
Ω
AVC
DVC
-PEAK V
+PEAK V
% DUTY FACTOR
FREQ
PERIOD
WIDTH
TRNSN TIME (HI LO)
TOTALIZE
FREQ RATIO A/C
A COUNT (B C)
A TRNSN (B C)
TIME (B C)
TIME (B•C)
THRESHOLD A LO
THRES A HI
THRES B
THRES C
LINE V
TEMP °C
1 2 3 4 5 6 7 8 9 10 11 12 13 14 15 16 17 18 19 20 21
Ω CURRENT SOURCE FROM R3590
P200
DIAG 3
TO CR291
CR290
R289
DMM
J176 +
MAX PEAK DCV ACV-500V Ω - 250V
J174 -
500V PEAK MAX
J172
P182
P184
A12 SWITCH BOARD
R190
PARTIAL A11 SWITCH BOARD
J203
J191
J190
J192
C190
P204
P205
J490-7 HI LINE FROM P890-1
J150-20
LOW LINE FROM P890-2
DIAG 12
PARTIAL A9 COUNTER BOARD
VTB FROM J138-5
VTC FROM J138-3
DIAG 4
DUTY FACTOR FROM J138-1
DIAG 6
VTH FROM J138-9
DIAG 4 6
VTL FROM J138-7
DIAG 6
TEMP FROM U480-6
DIAG 1
P207
COMP ATTEN
AC BUFFER
PARTIAL A7 DMM BOARD
PARTIAL A1 IO BOARD
A/D TO R410
DIAG 2
A C CONVERTOR
PARTIAL A7 DMM BOARD
P202
J800
A SIG OR A SIG TRNSNS FROM U802-8
DIAG 7
TX STOP FROM J570-14
C SIG FROM J570-22
B SIG • C SIG FROM U800-1
A SIG NEG TRNSN FROM U804-10
B SIG • C SIG FROM U800-13
B SIG FROM J570-26
TX START FROM J570-18
MUX CLOCK FROM U1130-9
PARTIAL A9 COUNTER BOARD

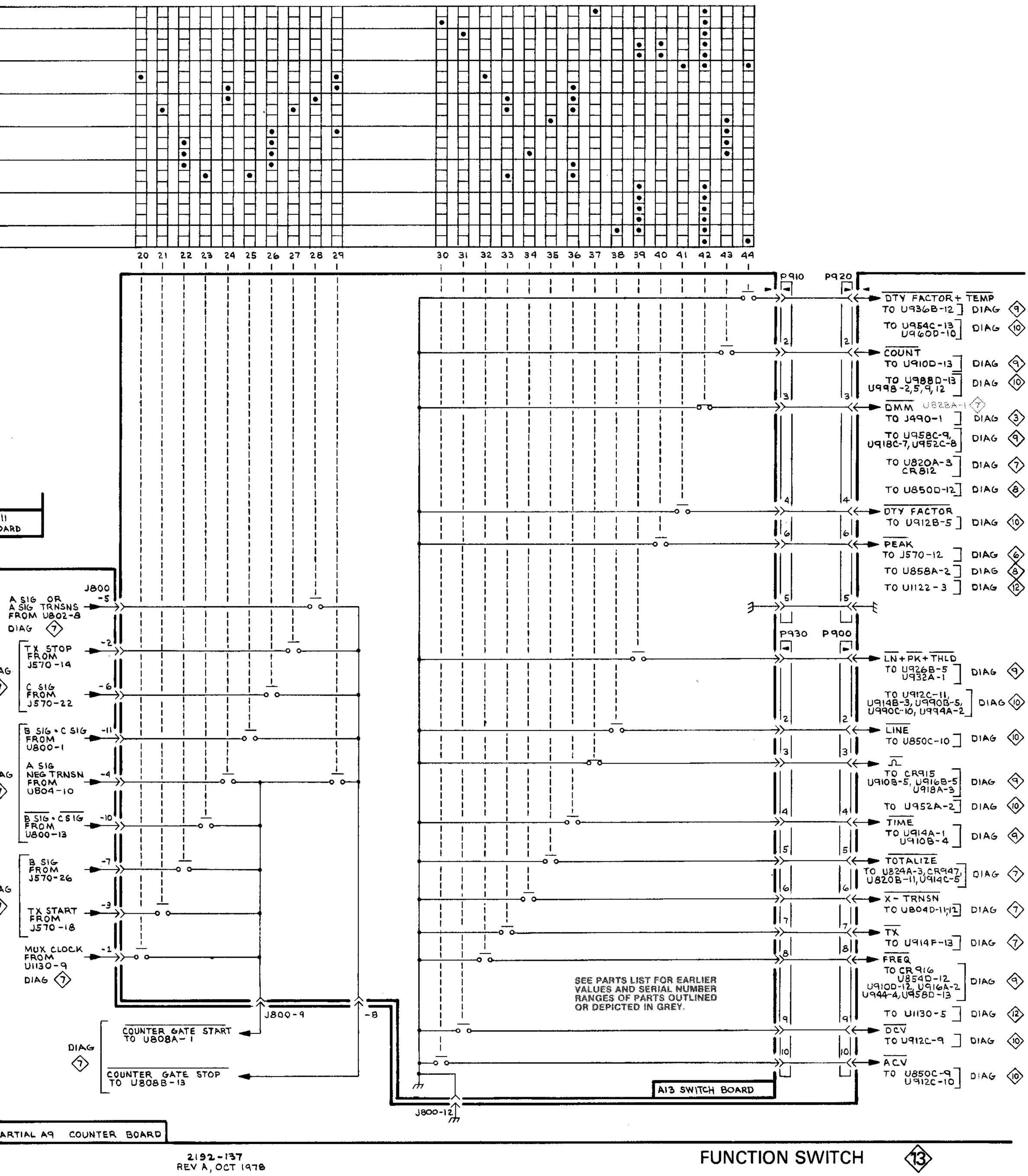

2192-137
REV A, OCT 1978

FUNCTION SWITCH

13

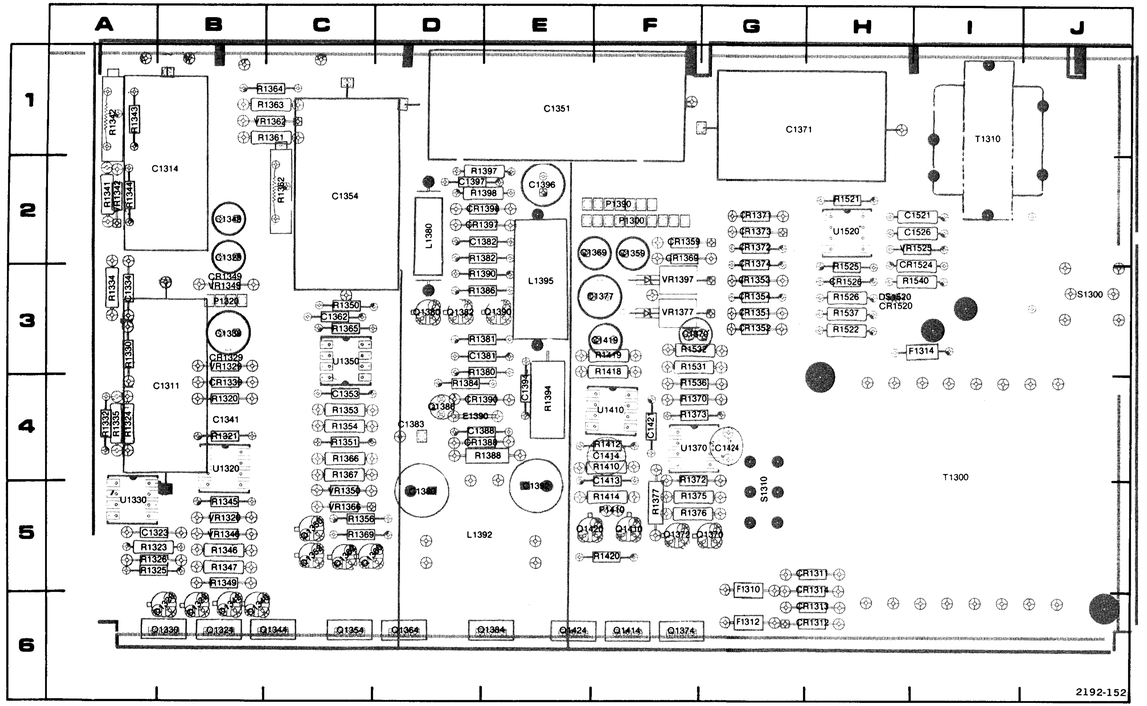

Figure 9-12. A16 Power Supply board component locations.

CKT NO	GRID LOC	CKT NO	GRID LOC	CKT NO	GRID LOC
C1311	4B	P1300	2F	R1382	2E
C1314	2B	P1320	3B	R1384	4D
C1323	5A	P1390	2F	R1386	3E
C1329	2B	P1410	5F	R1388	4E
C1334	3A			R1390	3E
C1339	3B	Q1320	6B	R1394	4E
C1341	4B	Q1322	6B	R1397	2E
C1349	2B	Q1324	6B	R1398	2E
C1351	1E	Q1330	6B	R1410	4F
C1353	4C	Q1340	6B	R1412	4F
C1354	2C	Q1342	6B	R1414	5F
C1359	2F	Q1344	6C	R1418	3F
C1362	3C	Q1350	5C	R1419	3F
C1369	2F	Q1352	5C	R1420	5F
C1370	3F	Q1354	6C	R1521	2H
C1371	1G	Q1360	5C	R1522	3H
C1377	3F	Q1362	5C	R1525	3H
C1380	5D	Q1364	6D	R1526	3H
C1381	3E	Q1370	5G	R1531	3F
C1382	2E	Q1372	5F	R1532	3F
C1383*	4D	Q1374	6F	R1536	4F
C1388	4E	Q1380	3D	R1537	3H
C1392	5E	Q1382	3D	R1540	3I
C1394	4E	Q1384	6E		
C1396	2E	Q1386	4D	S1300	3J
C1397	2D	Q1390	3E	S1310	5G
C1413	5F	Q1410	5F		
C1414*	4F	Q1414	6F	T1300	4I
C1419	3F	Q1420	5F	T1310	1I
C1421	4F	Q1424	6E		
C1424*	4G			U1320	4B
C1521	2I	R1320	4B	U1330	5A
C1526	2I	R1321	4B	U1350	3C
		R1323	5A	U1370	4F
CR1311	5H	R1324	4A	U1410	4F
CR1312	6H	R1325	5A	U1520	2H
CR1313	6H	R1326	5A		
CR1314	5H	R1330	3A	VR1320	5B
CR1329*	3B	R1332	4A	VR1329*	3B
CR1339	4B	R1334	3A	VR1342	2A
CR1349*	3B	R1335	4A	VR1346	5B
CR1351	3G	R1341	2A	VR1349*	3B
CR1352	3G	R1342	1A	VR1350	5C
CR1353	3G	R1343	1A	VR1362	1C
CR1354	3G	R1344	2A	VR1366	5C
CR1359	2F	R1345	5B	VR1377	3F
CR1369	2F	R1346	5B	VR1397	3F
CR1371	2G	R1347	5B	VR1525	2I
CR1372	2G	R1349	5B		
CR1373	2G	R1350	3C		
CR1374	2G	R1351	4C		
CR1388	4E	R1353	4C		
CR1390	4E	R1354	4C		
CR1397	2E	R1356	5C		
CR1398	2E	R1361	1C		
CR1520*	3H	R1362	2C		
CR1524	2I	R1363	1C		
CR1526	3H	R1364	1C		
		R1365	3C		
DS1520*	3H	R1366	4C		
		R1367	4C		
E1390	4D	R1369	5C		
		R1370	4F		
F1310	5G	R1372	4F		
F1312	6G	R1373	4F		
F1314	3I	R1375	5F		
		R1376	5F		
L1380	2D	R1377	5F		
L1392	5E	R1380	3E		
L1395	3E	R1381	3E		

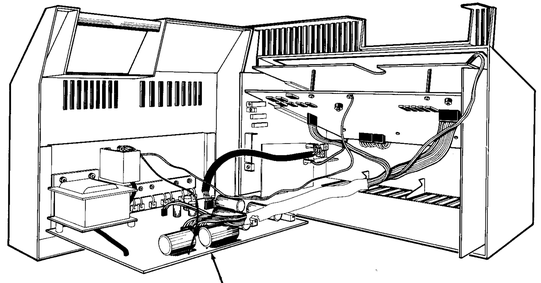

A16 Power Supply board

*See Parts List for serial number ranges.

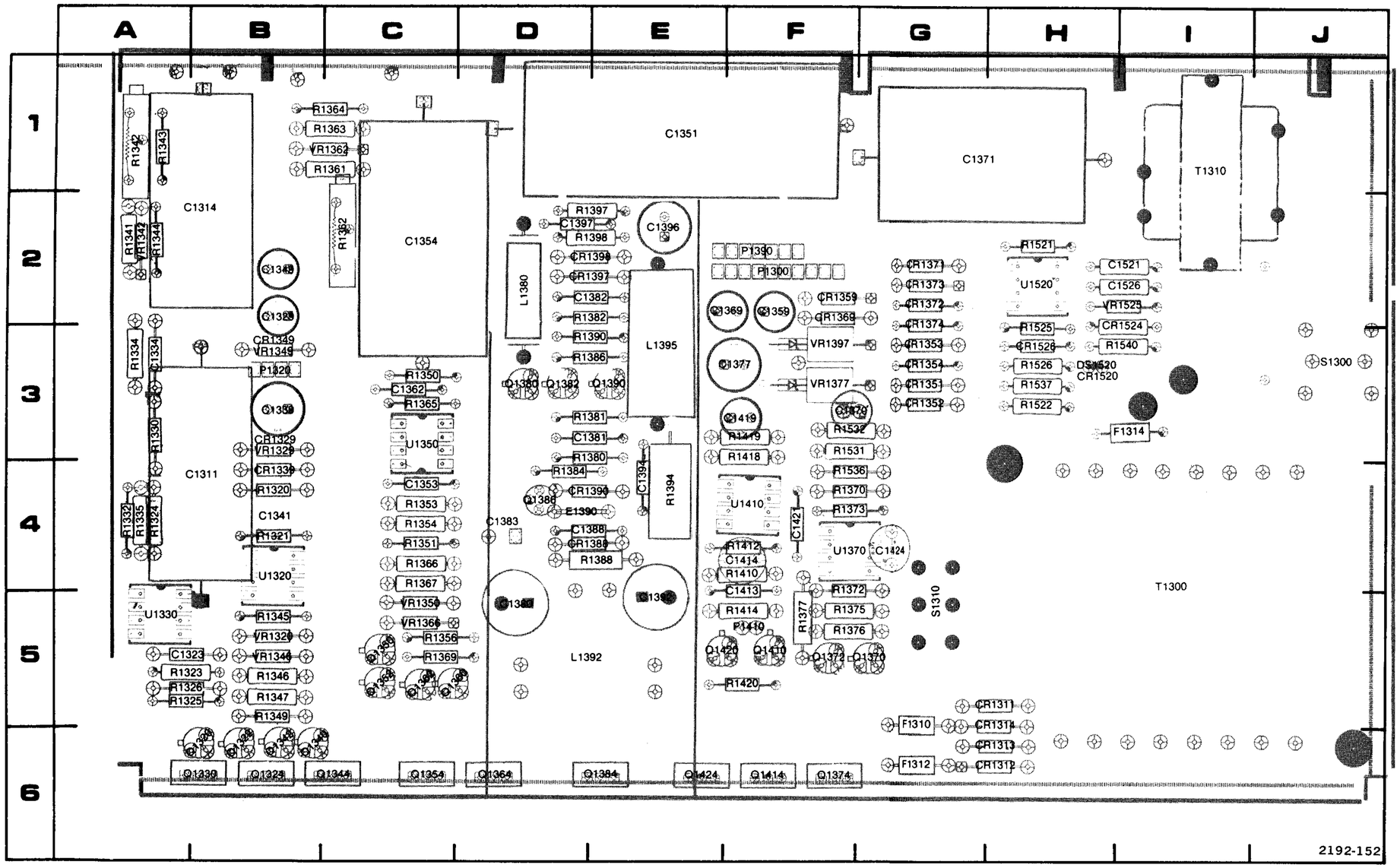

Figure 9-12. A16 Power Supply board component locations.

CKT NO	GRID LOC	CKT NO	GRID LOC	CKT NO	GRID LOC
C1311	4B	P1300	2F	R1382	2E
C1314	2B	P1320	3B	R1384	4D
C1323	5A	P1390	2F	R1386	3E
C1329	2B	P1410	5F	R1388	4E
C1334	3A			R1390	3E
C1339	3B	Q1320	6B	R1394	4E
C1341	4B	Q1322	6B	R1397	2E
C1349	2B	Q1324	6B	R1398	2E
C1351	1E	Q1330	6B	R1410	4F
C1353	4C	Q1340	6B	R1412	4F
C1354	2C	Q1342	6B	R1414	5F
C1359	2F	Q1344	6C	R1418	3F
C1362	3C	Q1350	5C	R1419	3F
C1369	2F	Q1352	5C	R1420	5F
C1370	3F	Q1354	6C	R1521	2H
C1371	1G	Q1360	5C	R1522	3H
C1377	3F	Q1362	5C	R1525	3H
C1380	5D	Q1364	6D	R1526	3H
C1381	3E	Q1370	5G	R1531	3F
C1382	2E	Q1372	5F	R1532	3F
C1383*	4D	Q1374	6F	R1536	4F
C1388	4E	Q1380	3D	R1537	3H
C1392	5E	Q1382	3D	R1540	3I
C1394	4E	Q1384	6E		
C1396	2E	Q1386	4D	S1300	3J
C1397	2D	Q1390	3E	S1310	5G
C1413	5F	Q1410	5F		
C1414*	4F	Q1414	6F	T1300	4I
C1419	3F	Q1420	5F	T1310	1I
C1421	4F	Q1424	6E		
C1424*	4G			U1320	4B
C1521	2I	R1320	4B	U1330	5A
C1526	2I	R1321	4B	U1350	3C
		R1323	5A	U1370	4F
CR1311	5H	R1324	4A	U1410	4F
CR1312	6H	R1325	5A	U1520	2H
CR1313	6H	R1326	5A		
CR1314	5H	R1330	3A	VR1320	5B
CR1329*	3B	R1332	4A	VR1329*	3B
CR1339	4B	R1334	3A	VR1342	2A
CR1349*	3B	R1335	4A	VR1346	5B
CR1351	3G	R1341	2A	VR1349*	3B
CR1352	3G	R1342	1A	VR1350	5C
CR1353	3G	R1343	1A	VR1362	1C
CR1354	3G	R1344	2A	VR1366	5C
CR1359	2F	R1345	5B	VR1377	3F
CR1369	2F	R1346	5B	VR1397	3F
CR1371	2G	R1347	5B	VR1525	2I
CR1372	2G	R1349	5B		
CR1373	2G	R1350	3C		
CR1374	2G	R1351	4C		
CR1388	4E	R1353	4C		
CR1390	4E	R1354	4C		
CR1397	2E	R1356	5C		
CR1398	2E	R1361	1C		
CR1520*	3H	R1362	2C		
CR1524	2I	R1363	1C		
CR1526	3H	R1364	1C		
		R1365	3C		
DS1520*	3H	R1366	4C		
		R1367	4C		
E1390	4D	R1369	5C		
		R1370	4F		
F1310	5G	R1372	4F		
F1312	6G	R1373	4F		
F1314	3I	R1375	5F		
		R1376	5F		
L1380	2D	R1377	5F		
L1392	5E	R1380	3E		
L1395	3E	R1381	3E		

*See Pa
serial n

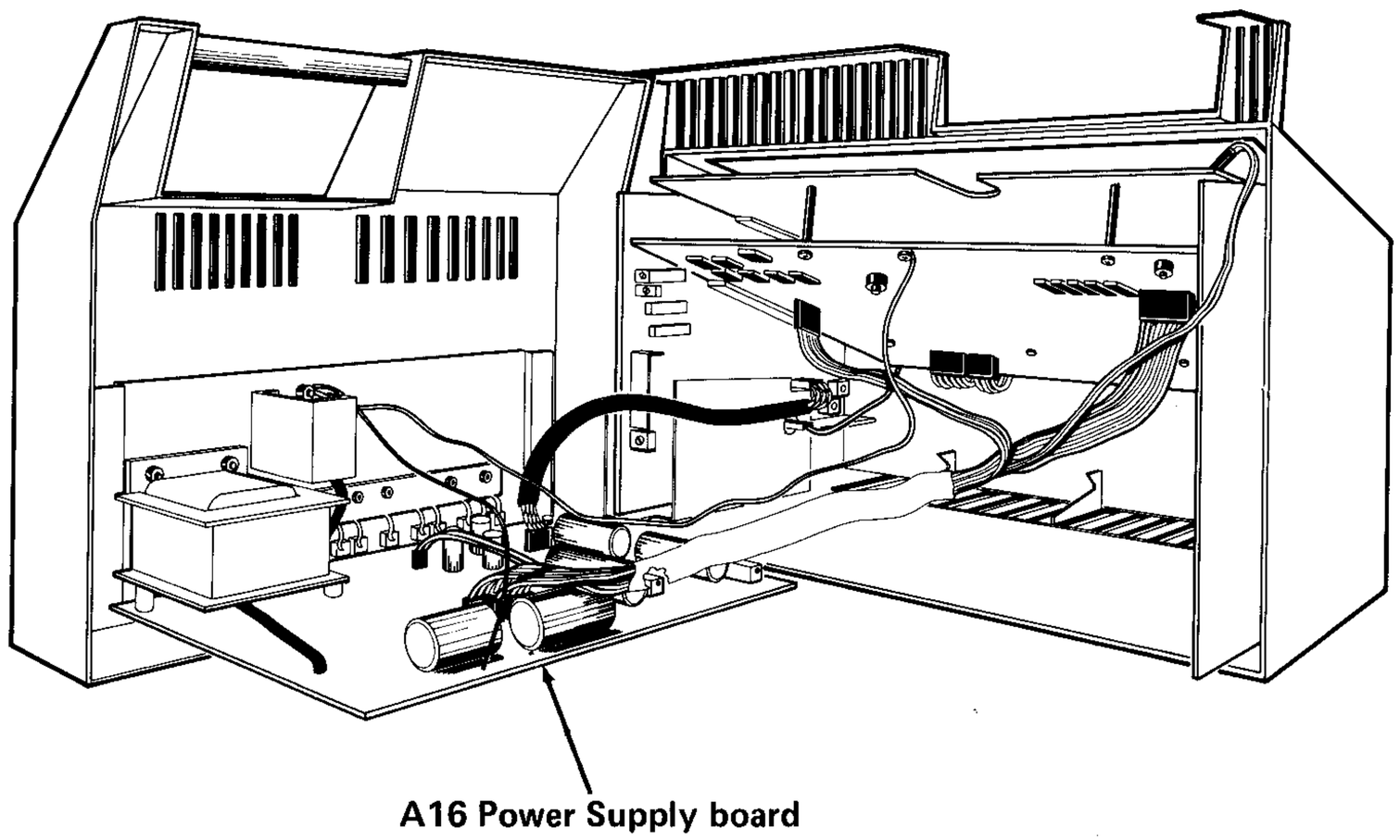

for
anges.

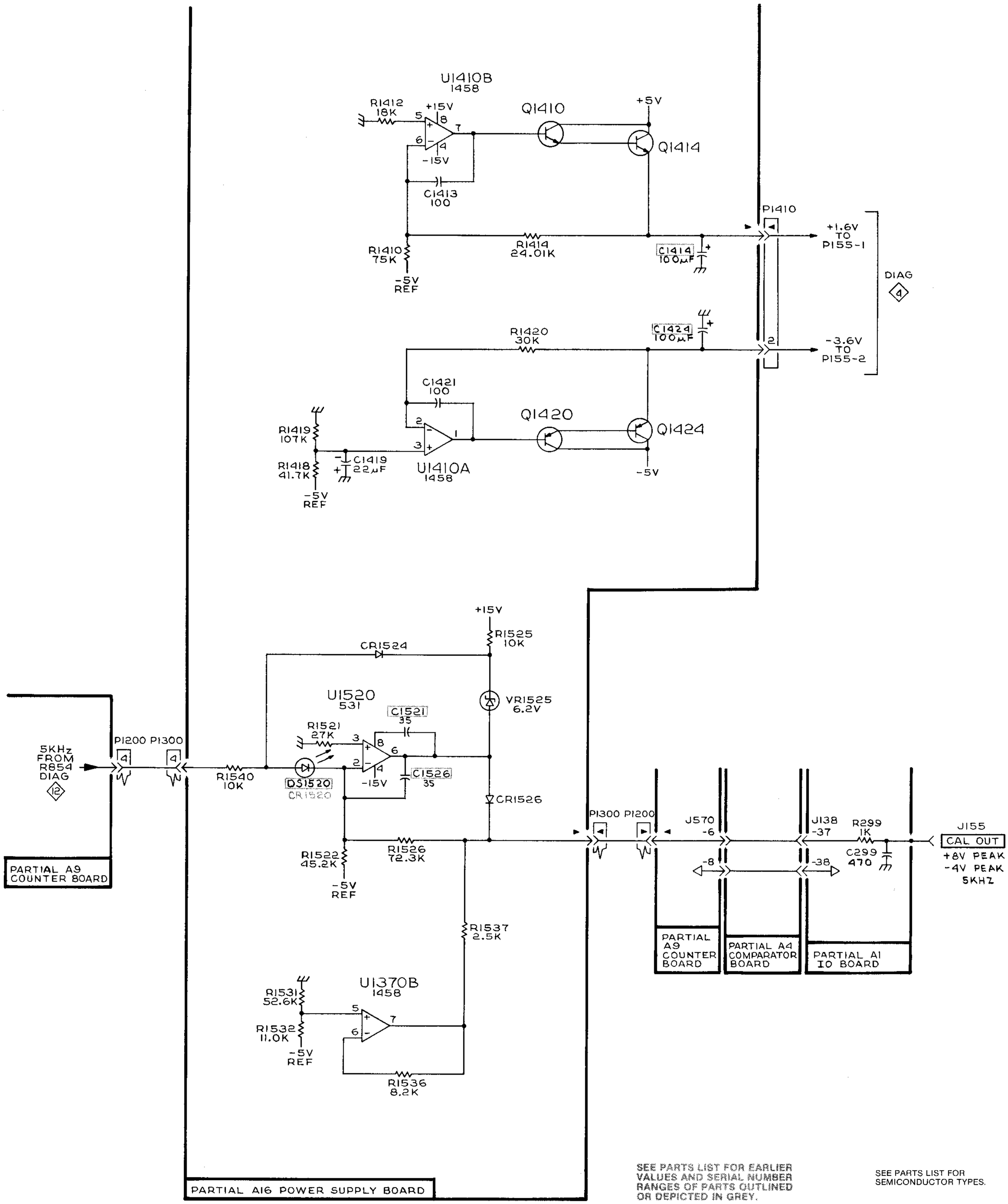

SEE PARTS LIST FOR EARLIER VALUES AND SERIAL NUMBER RANGES OF PARTS OUTLINED OR DEPICTED IN GREY.

SEE PARTS LIST FOR SEMICONDUCTOR TYPES.

+1.6 AND −3.6 VOLT REGULATORS CALIBRATOR

14 B

2192-139

REV. B, JULY 1979

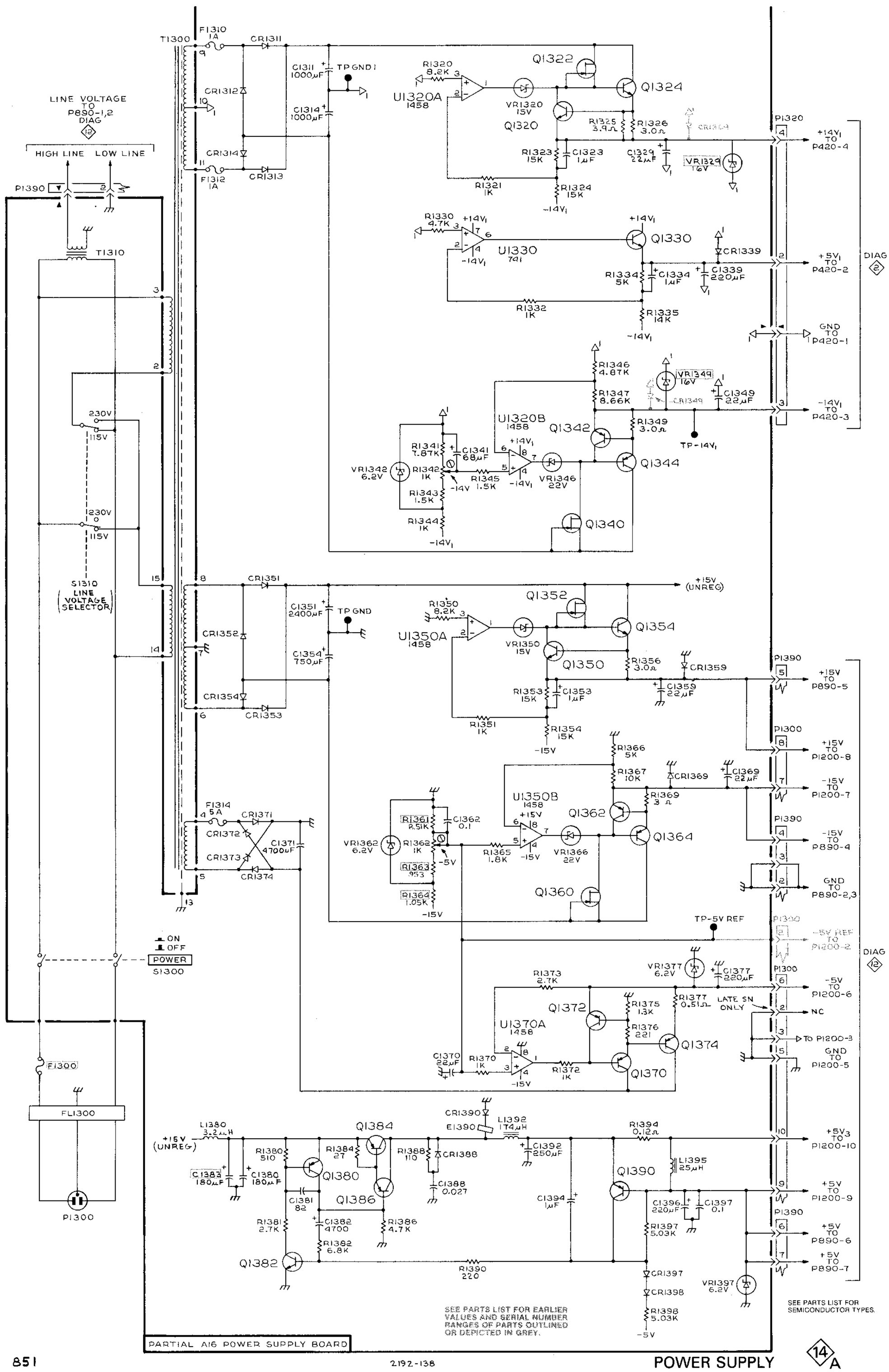

2192-138

POWER SUPPLY

14A

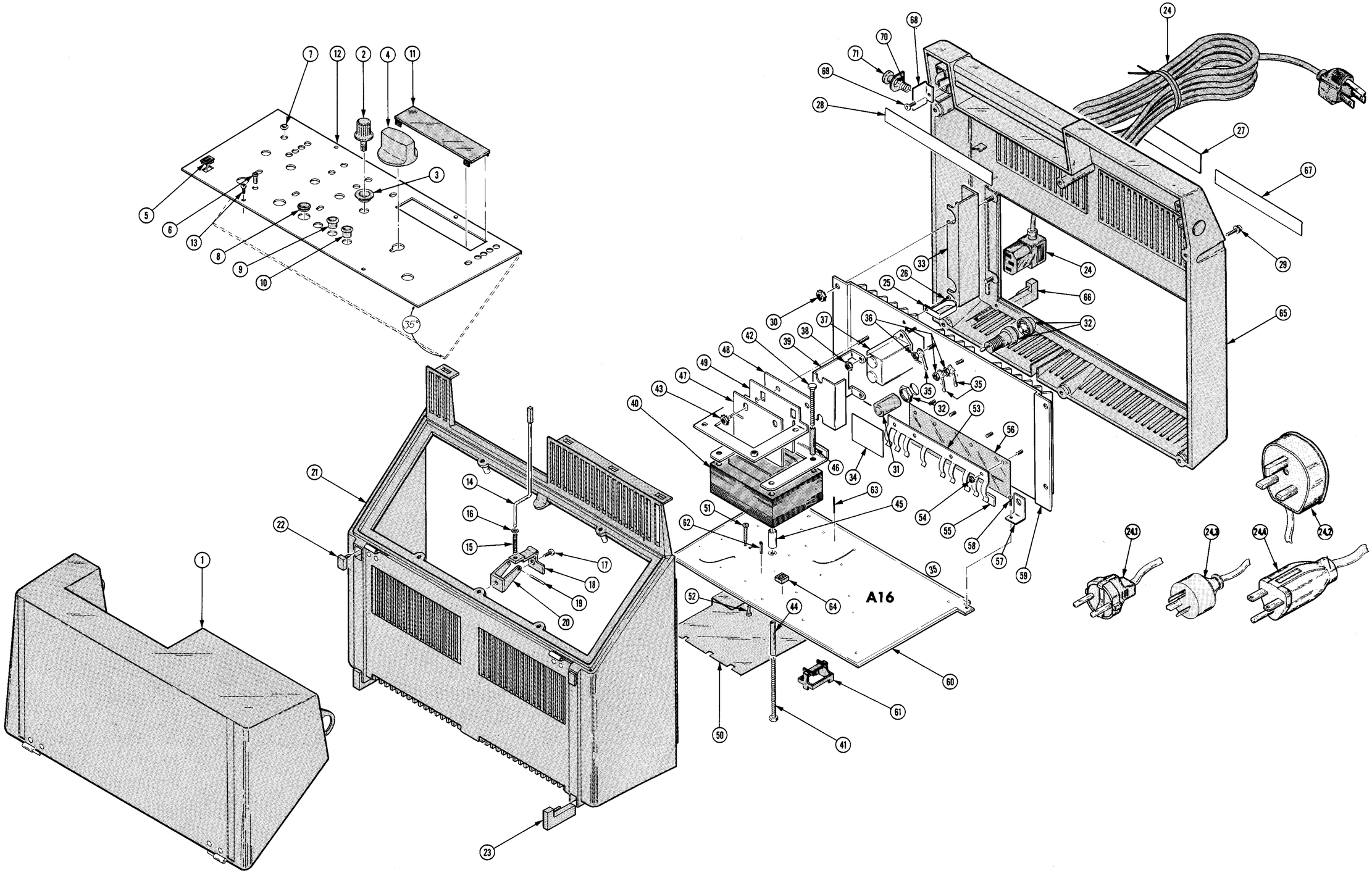
A16

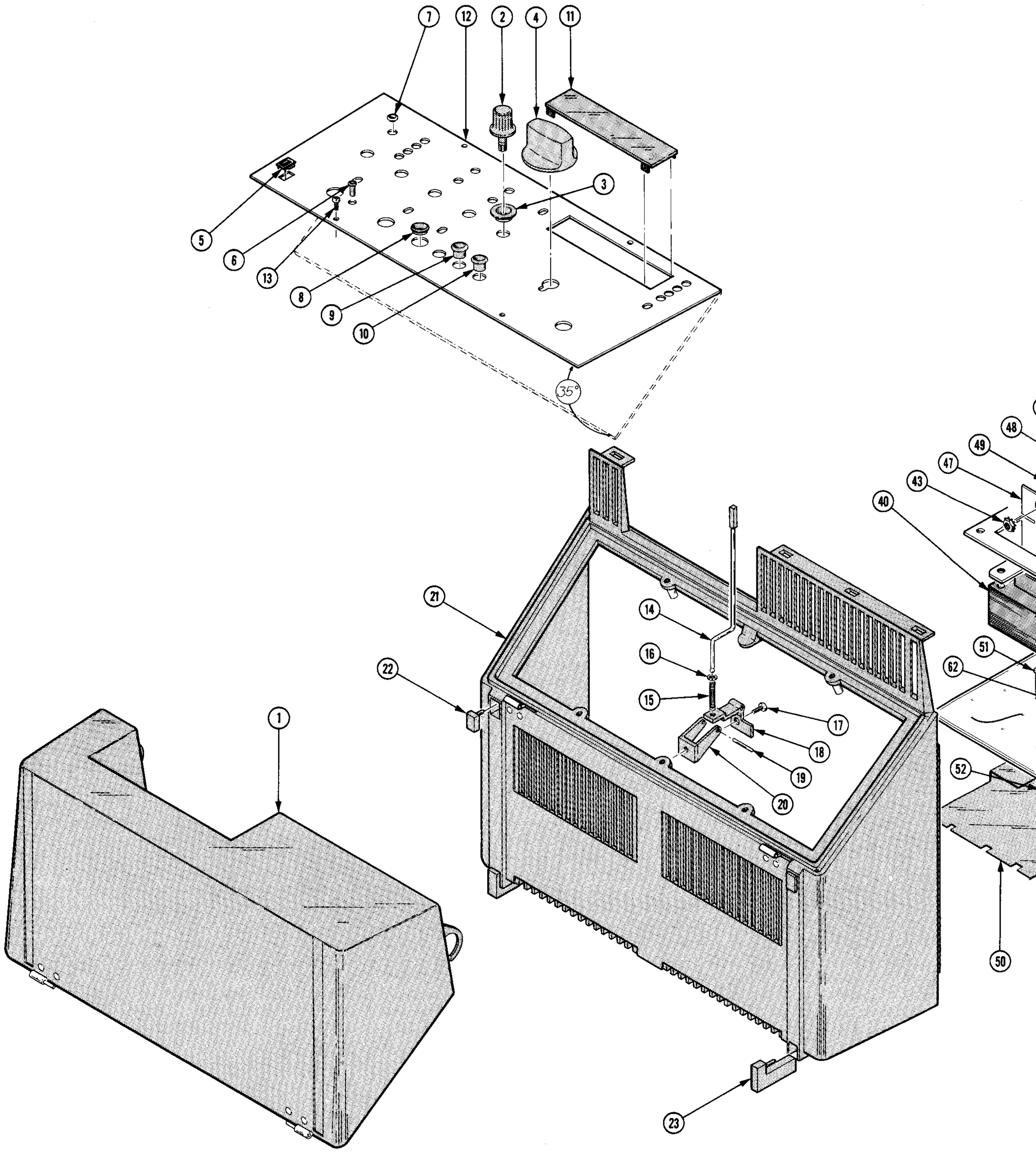
7
12
2
4
11
3
5
6
13
8
9
10
35°
48
49
47
43
40
21
14
16
22
15
17
18
19
20
51
62
52
50
1
23

REV FEB 1982

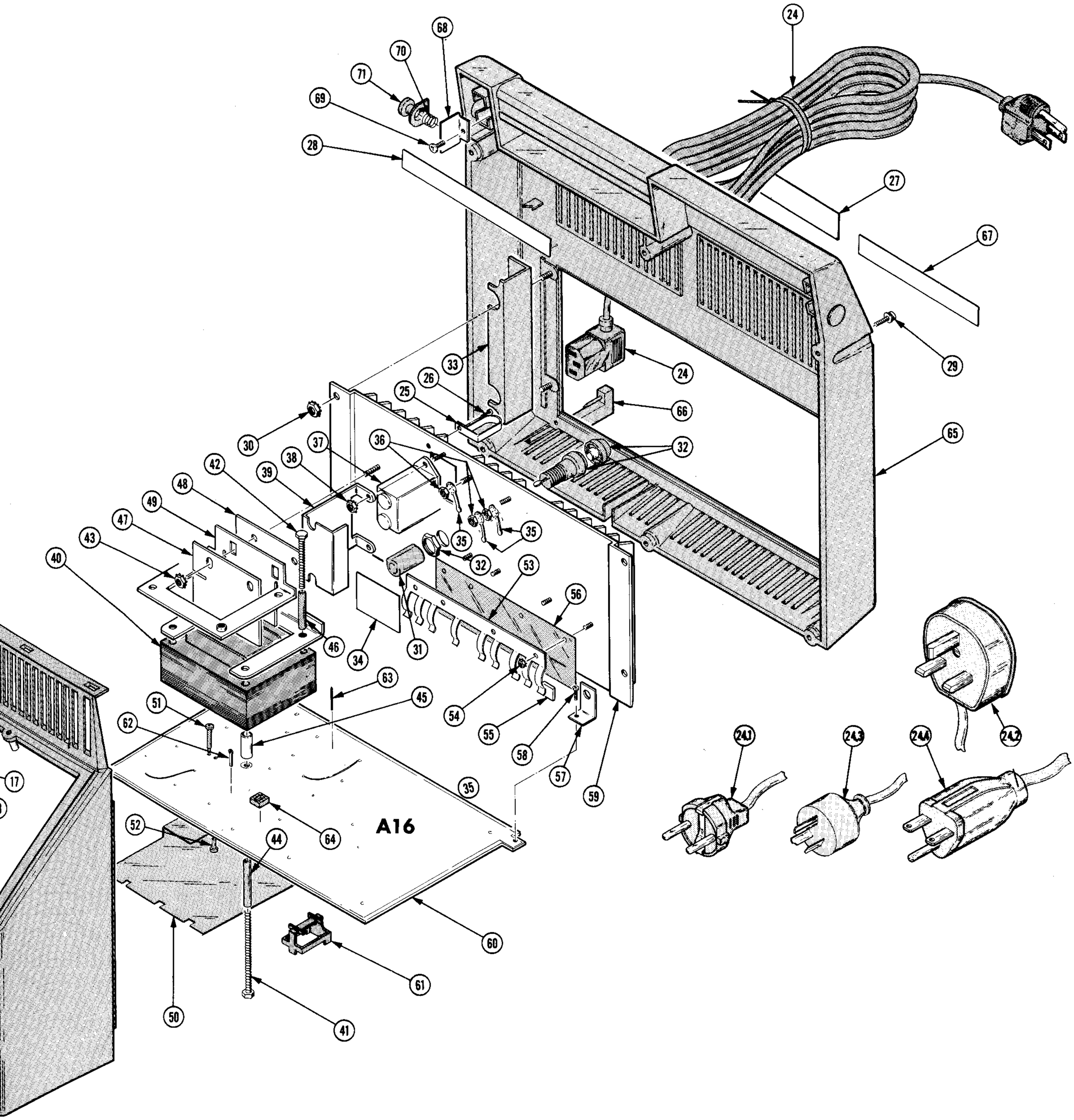
A16

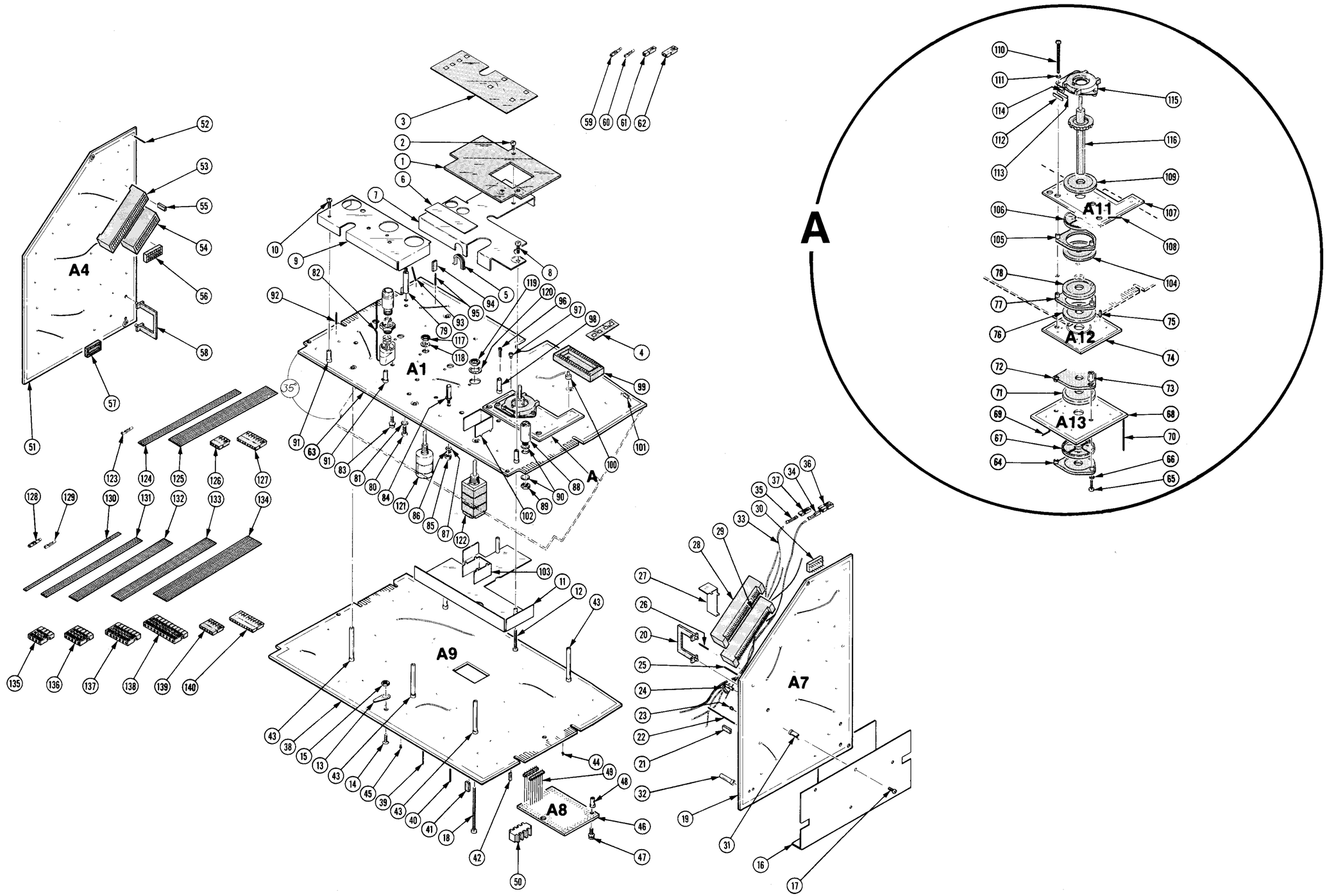
A4
A1
A
A11
A12
A13
A9
A8
A7

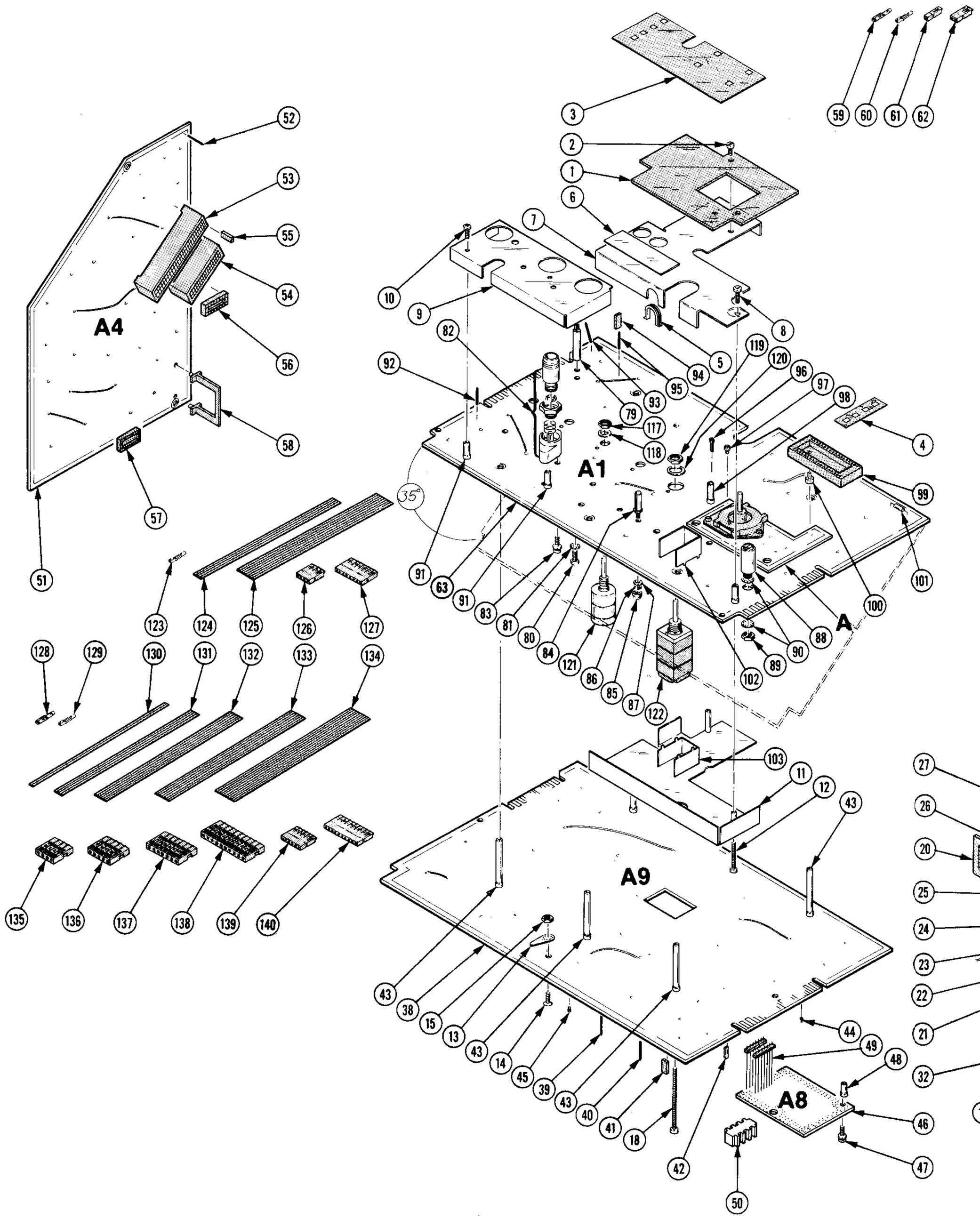
A4
A1
A9
A8
A
35°

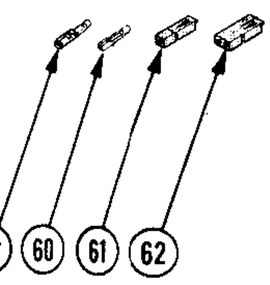
60
61
62

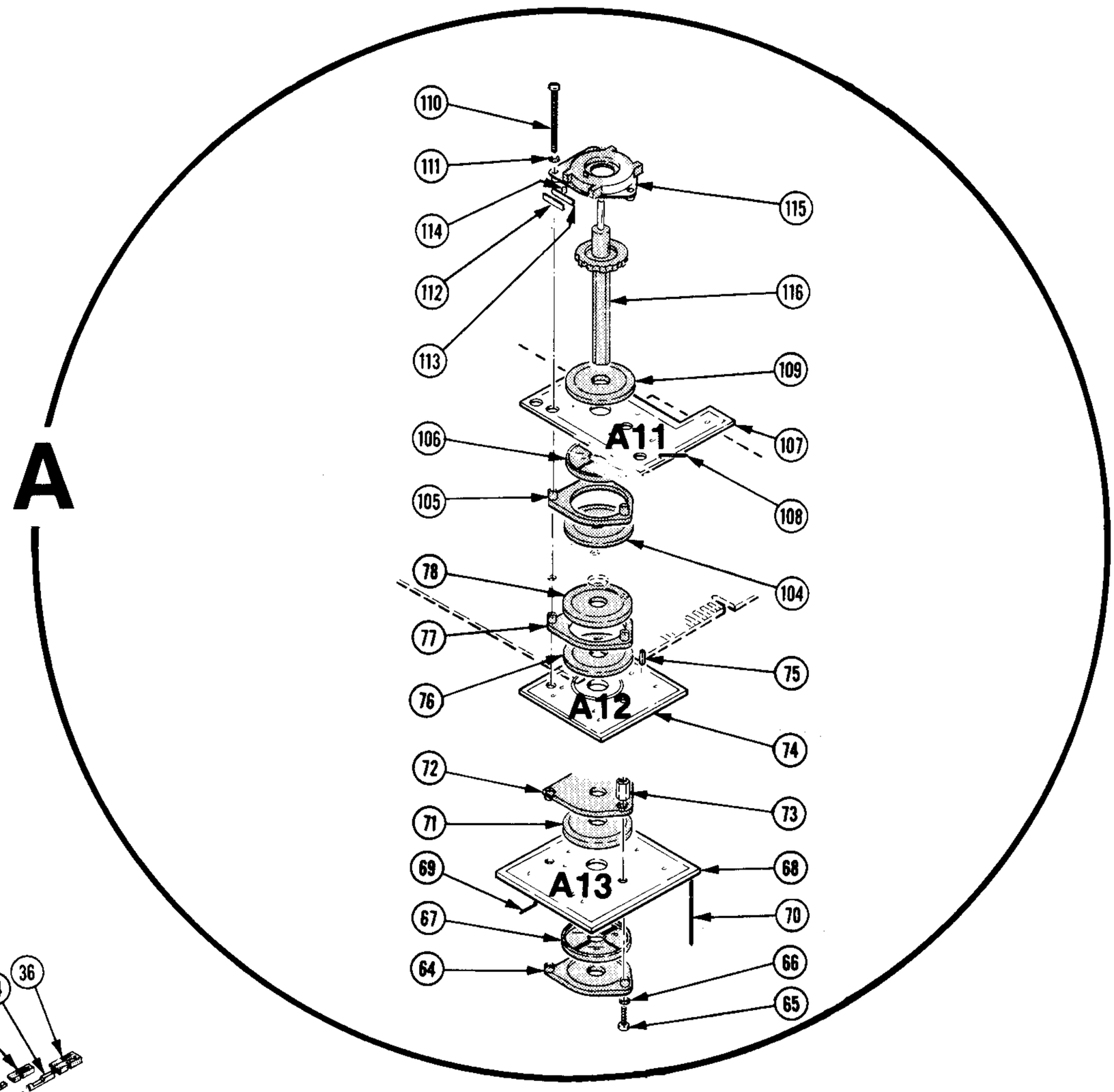
A
110
111
114
112
113
115
116
109
A11
106
107
105
108
104
78
77
76
75
A12
74
72
71
73
69
A13
68
67
70
64
66
65

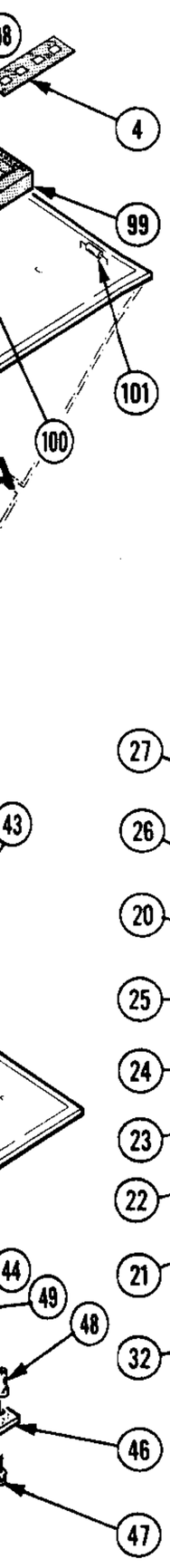
4
99
101
100
43
44
49
48
46
47

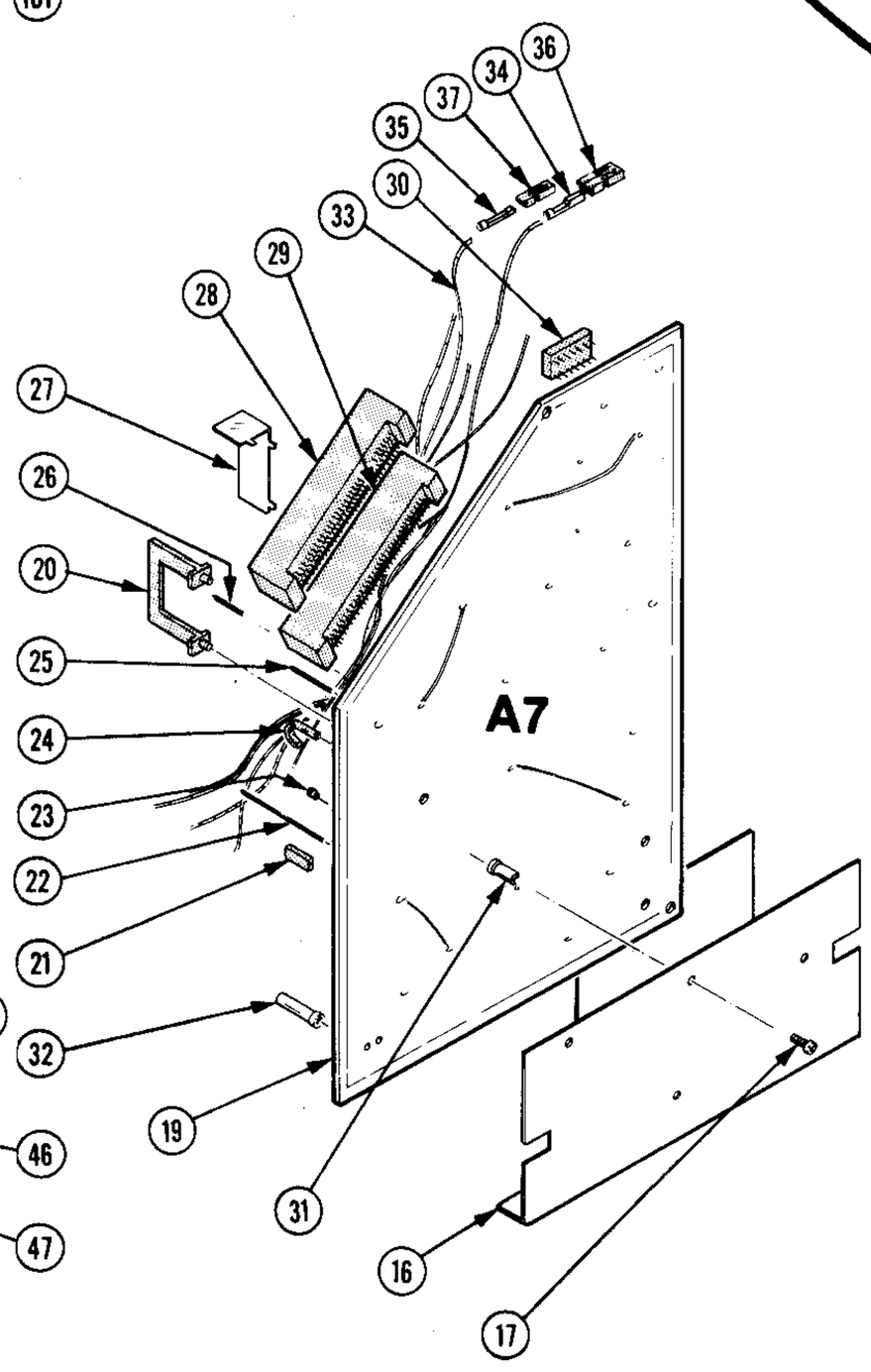
36
34
37
35
30
33
29
28
27
26
20
25
24
23
22
21
32
19
31
16
17
A7

REV FEB 1982

REPLACEABLE MECHANICAL PARTS

PARTS ORDERING INFORMATION

Replacement parts are available from or through your local Tektronix, Inc. Field Office or representative.

Changes to Tektronix instruments are sometimes made to accommodate improved components as they become available, and to give you the benefit of the latest circuit improvements developed in our engineering department. It is therefore important, when ordering parts, to include the following information in your order: Part number, instrument type or number, serial number, and modification number if applicable.

If a part you have ordered has been replaced with a new or improved part, your local Tektronix, Inc. Field Office or representative will contact you concerning any change in part number.

Change information, if any, is located at the rear of this manual.

SPECIAL NOTES AND SYMBOLS

X000	Part first added at this serial number
00X	Part removed after this serial number

FIGURE AND INDEX NUMBERS

Items in this section are referenced by figure and index numbers to the illustrations.

INDENTATION SYSTEM

This mechanical parts list is indented to indicate item relationships. Following is an example of the indentation system used in the description column.

1 2 3 4 5 Name & Description

Assembly and/or Component
Attaching parts for Assembly and/or Component
- - - * - - -
Detail Part of Assembly and/or Component
Attaching parts for Detail Part
- - - * - - -
Parts of Detail Part
Attaching parts for Parts of Detail Part
- - - * - - -

Attaching Parts always appear in the same indentation as the item it mounts, while the detail parts are indented to the right. Indented items are part of, and included with, the next higher indentation. The separation symbol - - - * - - - indicates the end of attaching parts.

Attaching parts must be purchased separately, unless otherwise specified.

ITEM NAME

In the Parts List, an Item Name is separated from the description by a colon (:). Because of space limitations, an Item Name may sometimes appear as incomplete. For further Item Name identification, the U.S. Federal Cataloging Handbook H6-1 can be utilized where possible.

ABBREVIATIONS

"	INCH
#	NUMBER SIZE
ACTR	ACTUATOR
ADPTR	ADAPTER
ALIGN	ALIGNMENT
AL	ALUMINUM
ASSEM	ASSEMBLED
ASSY	ASSEMBLY
ATTEN	ATTENUATOR
AWG	AMERICAN WIRE GAGE
BD	BOARD
BRKT	BRACKET
BRS	BRASS
BRZ	BRONZE
BSHG	BUSHING
CAB	CABINET
CAP	CAPACITOR
CER	CERAMIC
CHAS	CHASSIS
CKT	CIRCUIT
COMP	COMPOSITION
CONN	CONNECTOR
COV	COVER
CPLG	COUPLING
CRT	CATHODE RAY TUBE
DEG	DEGREE
DWR	DRAWER
ELCTRN	ELECTRON
ELEC	ELECTRICAL
ELCTLT	ELECTROLYTIC
ELEM	ELEMENT
EPL	ELECTRICAL PARTS LIST
EQPT	EQUIPMENT
EXT	EXTERNAL
FIL	FILLISTER HEAD
FLEX	FLEXIBLE
FLH	FLAT HEAD
FLTR	FILTER
FR	FRAME or FRONT
FSTNR	FASTENER
FT	FOOT
FXD	FIXED
GSKT	GASKET
HDL	HANDLE
HEX	HEXAGON
HEX HD	HEXAGONAL HEAD
HEX SOC	HEXAGONAL SOCKET
HLCPS	HELICAL COMPRESSION
HLEXT	HELICAL EXTENSION
HV	HIGH VOLTAGE
IC	INTEGRATED CIRCUIT
ID	INSIDE DIAMETER
IDENT	IDENTIFICATION
IMPLR	IMPELLER
IN	INCH
INCAND	INCANDESCENT
INSUL	INSULATOR
INTL	INTERNAL
LPHLDR	LAMPHOLDER
MACH	MACHINE
MECH	MECHANICAL
MTG	MOUNTING
NIP	NIPPLE
NON WIRE	NOT WIRE WOUND
OBD	ORDER BY DESCRIPTION
OD	OUTSIDE DIAMETER
OVH	OVAL HEAD
PH BRZ	PHOSPHOR BRONZE
PL	PLAIN or PLATE
PLSTC	PLASTIC
PN	PART NUMBER
PNH	PAN HEAD
PWR	POWER
RCPT	RECEPTACLE
RES	RESISTOR
RGD	RIGID
RLF	RELIEF
RTNR	RETAINER
SCH	SOCKET HEAD
SCOPE	OSCILLOSCOPE
SCR	SCREW
SE	SINGLE END
SECT	SECTION
SEMICOND	SEMICONDUCTOR
SHLD	SHIELD
SHLDR	SHOULDERED
SKT	SOCKET
SL	SLIDE
SLFLKG	SELF-LOCKING
SLVG	SLEEVING
SPR	SPRING
SQ	SQUARE
SST	STAINLESS STEEL
STL	STEEL
SW	SWITCH
T	TUBE
TERM	TERMINAL
THD	THREAD
THK	THICK
TNSN	TENSION
TPG	TAPPING
TRH	TRUSS HEAD
V	VOLTAGE
VAR	VARIABLE
W/	WITH
WSHR	WASHER
XFMR	TRANSFORMER
XSTR	TRANSISTOR

CROSS INDEX—MFR. CODE NUMBER TO MANUFACTURER

Mfr. Code	Manufacturer	Address	City, State, Zip
S3109	C/O PANEL COMPONENTS CORP.	P.O. BOX 6626	SANTA ROSA, CA 95406
000BK	STAUFFER SUPPLY	105 SE TAYLOR	PORTLAND, OR 97214
00779	AMP, INC.	P O BOX 3608	HARRISBURG, PA 17105
08261	SPECTRA-STRIP CORP.	7100 LAMPSON AVE	GARDEN GROVE, CA 92642
08530	RELIANCE MICA CORP.	342-39TH ST.	BROOKLYN, NY 11232
12327	FREEWAY CORPORATION	9301 ALLEN DRIVE	CLEVELAND, OH 44125
16428	BELDEN CORP.	P. O. BOX 1331	RICHMOND, IN 47374
22526	BERG ELECTRONICS, INC.	YOUK EXPRESSWAY	NEW CUMBERLAND, PA 17070
22599	ESNA, DIV. OF AMERACE CORPORATION	16150 STAGG STREET	VAN NUYS, CA 91409
22670	G.M. NAMEPLATE, INC.	2040 15TH AVENUE WEST	SEATTLE, WA 98119
26365	GRIES REPRODUCER CO., DIV. OF COATS AND CLARK, INC.	125 BEECHWOOD AVE.	NEW ROCHELLE, NY 10802
31781	EDAC INC.	20 RAILSIDE RD.	DON MILLS, ONT, CANADA M3A 1A
55210	GETTIG ENG. AND MFG. COMPANY	PO BOX 85, OFF ROUTE 45	SPRING MILLS, PA 16875
71279	CAMBRIDGE THERMIONIC CORP.	445 CONCORD AVE.	CAMBRIDGE, MA 02138
71785	TRW, CINCH CONNECTORS	1501 MORSE AVENUE	ELK GROVE VILLAGE, IL 60007
73743	FISCHER SPECIAL MFG. CO.	446 MORGAN ST.	CINCINNATI, OH 45206
73803	TEXAS INSTRUMENTS, INC., METALLURGICAL MATERIALS DIV.	34 FOREST STREET	ATTLEBORO, MA 02703
75915	LITTELFUSE, INC.	800 E. NORTHWEST HWY	DES PLAINES, IL 60016
78189	ILLINOIS TOOL WORKS, INC. SHAKEPROOF DIVISION	ST. CHARLES ROAD	ELGIN, IL 60120
78471	TILLEY MFG. CO.	900 INDUSTRIAL RD.	SAN CARLOS, CA 94070
79807	WROUGHT WASHER MFG. CO.	2100 S. O BAY ST.	MILWAUKEE, WI 53207
80009	TEKTRONIX, INC.	P O BOX 500	BEAVERTON, OR 97077
80126	PACIFIC ELECTRICORD CO.	747 W. REDONDO BEACH,P O BOX 10	GARDENA, CA 90247
83385	CENTRAL SCREW CO.	2530 CRESCENT DR.	BROADVIEW, IL 60153
86928	SEASTROM MFG. COMPANY, INC.	701 SONORA AVENUE	GLENDALE, CA 91201
91506	AUGAT, INC.	33 PERRY AVE.	ATTLEBORO, MA 02703
98291	SEALECTRO CORP.	225 HOYT	MAMARONECK, NY 10544

Fig. & Index No.	Tektronix Part No.	Serial/Model No. Eff	Dscont	Qty	1 2 3 4 5 Name & Description	Mfr Code	Mfr Part Number
1-1	200-2064-01			1	COVER,ACCESS:W/HARDWARE AND LID	80009	200-2064-00
	105-0748-00			2	. LATCH,COVER:	80009	105-0748-00
	200-2102-00			1	. LID,SCOPE COVER:PLASTIC	80009	200-2102-00
-2	366-1728-00			5	KNOB:GRAY,0.6 H,0.706 OD,W/SHAFT	80009	366-1728-00
-3	358-0591-00			5	BUSHING,SLEEVE:0.343 ID X 0.165 THK,PLSTC	80009	358-0591-00
-4	366-1736-00			1	KNOB:GY,0.122 ID,1.5 OD,0.77 H	80009	366-1736-00
-5	426-1376-00			1	FRAME,PB:	80009	426-1376-00
-6	358-0582-00			1	BUSHING,SLEEVE:0.145 ID X 0.478 L,PLASTIC	80009	358-0582-00
-7	358-0581-00			1	BUSHING,SLEEVE:0.218 ID X 0.133 THK,PLSTC	80009	358-0581-00
-8	358-0580-00			4	BUSHING,SLEEVE:0.468 ID X 0.133 THK,PLSTC	80009	358-0580-00
-9	358-0584-01			2	BUSHING,CONN:0.325 ID,PLASTIC	80009	358-0584-01
-10	358-0584-00			1	BUSHING,CONN:0.325 ID,PLASTIC	80009	358-0584-00
-11	378-2026-00			1	FILTER,LIGHT:RED,0.99 W X 3.82 L,PLASTIC	80009	378-2026-00
-12	333-2266-00			1	PANEL,FRONT:851	80009	333-2266-00
					(ATTACHING PARTS)		
-13	211-0008-00			4	SCREW,MACHINE:4-40 X 0.25 INCH,PNH STL	83385	OBD
					- - - * - - -		
-14	384-1468-01			1	EXTENSION SHAFT:W/KNOB	80009	384-1468-01
					(ATTACHING PARTS)		
-15	214-1182-00			1	SPRING,HLCPS:0.19 OD X 0.6L,CLOSED	80009	214-1182-00
-16	210-0801-00			1	WASHER,FLAT:0.14 ID X 0.025 THK,BRS NI PL	12327	OBD
					- - - * - - -		
	105-0744-01			1	ACTUATOR,SWITCH:POWER,W/BRACKET AND PIN	80009	105-0744-01
					(ATTACHING PARTS)		
-17	211-0504-00			1	SCREW,MACHINE:6-32 X 0.25 INCH,PNH STL	83385	OBD
					- - - * - - -		
	----- -----			-	ACTUATOR INCLUDES:		
-18	105-0744-00			1	. ACTUATOR,SWITCH:POWER	80009	105-0744-00
					(ATTACHING PARTS)		
-19	214-2554-00			1	. PIN,STR,HDLS:0.094 DIA X 0.7 L,AL	80009	214-2554-00
					- - - * - - -		
-20	407-1955-00			1	. BRACKET,ACTR:POWER SWITCH,POLYAMIDE	80009	407-1955-00
-21	200-2042-01			1	COVER,FRONT:W/HARDWARE	80009	200-2042-01
-22	348-0513-00			2	. FOOT,CABINET:POLYURETHANE,BLACK	80009	348-0513-00
-23	348-0514-00			2	. FOOT,CABINET:POLYURETHANE,BLACK	80009	348-0514-00
-24	161-0117-00	B010100	B036386	1	CABLE ASSY,PWR,:3,18 AWG,125V,120.0 L	16428	KH 8673
	161-0104-00	B036387		1	CABLE ASSY,PWR,:3 WIRE,98.0" LONG	16428	KH8352
	----- -----			-	(STANDARD ONLY)		
	343-0170-00	XB036387		1	RTNR,CA TO CA:U/W 0.25 OD CABLES	80009	343-0170-00
	----- -----			-	(OPTION A1,A2,A3,A4 ONLY)		
-24.1	161-0104-06	XB036387		1	CABLE ASSY,PWR:3 X 0.75MM SQ,220V,98.0L	80126	OBD
	----- -----			-	(OPTION A1 EUROPEAN ONLY)		
-24.2	161-0104-07	XB036387		1	CABLE ASSY,PWR:3 X 0.75MM SQ,240V,98.0 L	80126	OBD
	----- -----			-	(OPTION A2 UNITED KINGDOM ONLY)		
-24.3	161-0104-05	XB036387		1	CABLE ASSY,PWR:3,18 AWG,240V,98.0 L	S3109	OBD
	----- -----			-	(OPTION A3 AUSTRALIAN ONLY)		
-24.4	161-0104-08	XB036387		1	CABLE ASSY,PWER:3,18 AWG,240V,98.0 L	80126	OBD
	----- -----			-	(OPTION A4 NORTH AMERICAN ONLY)		
-25	343-0702-00			1	CLAMP,LOOP:STAINLESS STEEL	80009	343-0702-00
					(ATTACHING PARTS)		
-26	211-0008-00			1	SCREW,MACHINE:4-40 X 0.25 INCH,PNH STL	83385	OBD
					- - - * - - -		
-27	334-2614-00			1	MARKER,IDENT:MARKED PROPERTY OF	80009	334-2614-00
-28	334-3011-00			1	PLATE,IDENT:MARKED 851	80009	334-3011-00
	334-3146-00			1	PLATE,IDENT:MARKED TEKTRONIX BDM 1250	80009	334-3146-00
	334-3359-00	XB021950		1	MARKER,IDENT:MARKED N,L & GROUND	80009	334-3359-00
	334-1418-00			2	PLATE,INDENT:BLANK	80009	334-1418-00
-29	211-0648-00			6	SCR ASSEM WSHR:6-32 X 0.625 INCH,PNH,STL	80009	211-0648-00
	672-0657-01			1	CKT BOARD ASSY:INPUT/OUTPUT	80009	672-0657-01
					(ATTACHING PARTS)		
-30	220-0410-00			4	NUT,EXTENDED WA:10-32 X 0.375 INCH,STL	83385	OBD
					- - - * - - -		
-31	200-1388-01			1	COVER,FUSE:	80009	200-1388-01
-32	352-0362-01			1	FUSEHOLDER:W/HARDWARE	75915	345002
-33	214-2520-00			2	CORD WRAP:4.5 L,PLASTIC	80009	214-2520-00

Fig. & Index No.	Tektronix Part No.	Serial/Model No. Eff	Dscont	Qty	1 2 3 4 5 Name & Description	Mfr Code	Mfr Part Number
	----- -----			-	CKT BOARD ASSY INCLUDES:		
1-34	334-2859-00			1	. MARKER,IDENT:MARKED CAUTION	22670	OBD
-35	210-0206-00			3	. TERMINAL,LUG:SE #10	86928	A373-147-1
					(ATTACHING PARTS)		
-36	210-0410-00			3	. NUT,PLAIN,HEX.:10-32 X 0.312 INCH,BRS	73743	2X20003-402
					- - - * - - -		
-37	----- -----			1	. FILTER,RFI:(SEE FL1300 REPL)		
					(ATTACHING PARTS)		
-38	210-0586-00			2	. NUT,PL,ASSEM WA:4-40 X 0.25,STL CD PL	83385	OBD
					- - - * - - -		
-39	337-2448-00			1	. SHIELD,ELEC:PRIMARY INPUT	80009	337-2448-00
-40	----- -----			1	. XFMR,PWR,STPDN:(SEE T1300 REPL)		
					(ATTACHING PARTS)		
-41	212-0522-00			2	. SCREW,MACHINE:10-32 X 2.50",HEX HD STL	83385	OBD
-42	212-0517-00			2	. SCREW,MACHINE:10-32 X 1.750INCH,HEX HD STL	83385	OBD
-43	220-0410-00			2	. NUT,EXTENDED WA:10-32 X 0.375 INCH,STL	83385	OBD
					- - - * - - -		
-44	166-0226-00			2	. INS SLV,ELEC:1.125 INCHES LONG	80009	166-0226-00
-45	361-0858-00			2	. SPACER,SLEEVE:0.66 L X 0.245 ID,AL	80009	361-0858-00
-46	166-0457-00			2	. INSUL SLVG,ELEC:0.19 ID X 1.875"LONG MYLAR	80009	166-0457-00
-47	407-1991-00			1	. BRACKET,SPACER:ALUMINUM	80009	407-1991-00
-48	407-1992-00			1	. BRACKET,XFMR:ALUMINUM	80009	407-1992-00
-49	407-1895-00			1	. BRACKET,XFMR:ALUMINUM	80009	407-1895-00
-50	337-2450-00			1	. SHIELD,ELEC:HIGH VOLTAGE	80009	337-2450-00
-51	386-3782-00			1	. SUPPORT,INSUL:0.55 L,PLASTIC	80009	386-3782-00
-52	386-3783-00			1	. SUPPORT,INSUL:0.2 L,PLASTIC	80009	386-3783-00
-53	344-0302-00			1	. CLIP,SPR TNSN:CMPNT MTG,CU-BE,2.35 L	80009	344-0302-00
					(ATTACHING PARTS)		
-54	210-0586-00			4	. NUT,PL,ASSEM WA:4-40 X 0.25,STL CD PL	83385	OBD
					- - - * - - -		
-55	342-0389-00			3	. INSULATOR,PLATE:TRANSISTOR,PLASTIC	80009	342-0389-00
-56	342-0370-00			1	. INSULATOR,PLATE:TRANSISTOR,MICA	08530	OBD
-57	407-1931-00			1	. BRACKET,CKT BD:ALUMINUM	80009	407-1931-00
					(ATTACHING PARTS)		
-58	211-0008-00			1	. SCREW,MACHINE:4-40 X 0.25 INCH,PNH STL	83385	OBD
					- - - * - - -		
	334-3379-00	XB021950		1	. MARKER,IDENT:MARKED GROUNDSYMBOL	80009	334-3379-00
	334-3285-00			1	. MARKER,IDENT:MARKED DANGER	80009	334-3285-00
-59	214-2516-00			1	. HEAT SINK,XSTR:2,TO-220	80009	214-2516-00
	198-3423-00			1	. WIRE SET,ELEC:	80009	198-3423-00
-60	----- -----			1	. CKT BOARD ASSY:POWER SUPPLY(SEE A16 REPL)		
-61	337-2494-00			1	. . SHIELD,ELEC:SWITCH	80009	337-2494-00
	361-0685-00	B010100	B020549X	1	. . SPACER,SWITCH:0.365 INCH LONG	80009	361-0685-00
-62	214-0579-00			4	. . TERM,TEST POINT:BRS CD PL	80009	214-0579-00
-63	131-0589-00			23	. . TERMINAL,PIN:0.46 L X 0.025 SQ	80009	131-0589-00
-64	136-0514-00			1	. . SKT,PL-IN ELEC:MICROCIRCUIT,8 DIP	73803	CS9002-8
-65	441-1358-01			1	CHAS,PORT DMM:W/HARDWARE	80009	441-1358-01
-66	348-0514-00			1	. FOOT,CABINET:POLYURETHANE,BLACK	80009	348-0514-00
-67	334-3081-00			1	. MARKER,IDENT:MARKED FUSE DATA	80009	334-3081-00
-68	407-1920-00			2	. BRACKET,COV LCH:ALUMINUM	80009	407-1920-00
					(ATTACHING PARTS)		
-69	211-0504-00			2	. SCREW,MACHINE:6-32 X 0.25 INCH,PNH STL	83385	OBD
					- - - * - - -		
-70	214-0428-00			2	. SPRING,HANDLE:0.375 OD X 0.4 L,CLOSED	80009	214-0428-00
-71	366-1724-00			2	. PUSH BUTTON:BLUE,0.72 SQ X 0.8 H	80009	366-1724-00

Fig. & Index No.	Tektronix Part No.	Serial/Model No. Eff	Dscont	Qty	1 2 3 4 5 Name & Description	Mfr Code	Mfr Part Number
2-1	342-0405-00			1	INSULATOR,FILM:CABLES,PLASTIC	80009	342-0405-00
					(ATTACHING PARTS)		
-2	211-0040-00			2	SCREW,MACHINE:4-40 X 0.25",BDGH PLSTC	26365	OBD
					- - - * - - -		
-3	351-0526-00	B010100	B020549X	1	GUIDE,LED:3.725 L X 1.5W,PLASTIC	80009	351-0526-00
-4	351-0527-00	B010100	B020549X	1	GUIDE,LED:0.6 L X 1.5 W,PLASTIC	80009	351-0527-00
-5	348-0171-00			1	GROMMET,PLASTIC:U-SHAPED	80009	348-0171-00
	334-2354-00	B010100	B020549	1	MARKER,IDENT:DANGER	80009	334-2354-00
-6	334-3285-00	B020550		1	MARKER,IDENT:MARKED DANGER	80009	334-3285-00
-7	337-2446-00			1	SHIELD,ELEC:I/O CARD DMM #4	80009	337-2446-00
					(ATTACHING PARTS)		
-8	211-0007-00			2	SCREW,MACHINE:4-40 X 0.188 INCH,PNH STL	83385	OBD
					- - - * - - -		
-9	337-2427-00			1	SHIELD,ELEC:IO/COUNTER INPUT #3	80009	337-2427-00
					(ATTACHING PARTS)		
-10	211-0007-00			2	SCREW,MACHINE:4-40 X 0.188 INCH,PNH STL	83385	OBD
					- - - * - - -		
-11	337-2447-00			1	SHIELD,ELEC:I/O CARD DMM #5	80009	337-2447-00
					(ATTACHING PARTS)		
-12	211-0018-00			2	SCREW,MACHINE:4-40 X 0.875 PNH,STL	83385	OBD
					- - - * - - -		
-13	210-0202-00	XB010550		1	TERMINAL,LUG:0.146 ID,LOCKING,BRZ TINNED	78189	2104-06-00-2520N
					(ATTACHING PARTS)		
-14	211-0504-00	XB020550		1	SCREW,MACHINE:6-32 X 0.25 INCH,PNH STL	83385	OBD
-15	210-0407-00	XB020550		1	NUT,PLAIN,HEX.:6-32 X 0.25 INCH,BRS	73743	3038-0228-402
					- - - * - - -		
-16	337-2502-00	XB020550		1	SHIELD,ELEC:DMM CIRCUIT BOARD	80009	337-2502-00
					(ATTACHING PARTS)		
-17	211-0007-00	XB020550		4	SCREW,MACHINE:4-40 X 0.188 INCH,PNH STL	83385	OBD
					- - - * - - -		
	672-0656-00			1	CKT BOARD ASSY:POWER SUPPLY	80009	672-0656-00
					(ATTACHING PARTS)		
-18	211-0166-00			5	SCREW,MACHINE:4-40 X 1.750,PNH,STL,CD PL	83385	OBD
					- - - * - - -		
-19	----- -----			1	. CKT BOARD ASSY:DMM(SEE A7 REPL)		
-20	351-0522-00			1	. . GUIDE,CKT CARD:BOTTOM AND BACK,PLASTIC	80009	351-0522-00
-21	131-0993-00			1	. . BUS,CONDUCTOR:2 WIRE BLACK	00779	530153-2
-22	131-2127-00			10	. . TERMINAL,CMPNT:4-HOLES,BRONZE	98291	011-6808-000-209
-23	131-0590-00			1	. . CONTACT,ELEC:0.71 INCH LONG	22526	47351
-24	343-0088-00			2	. . CLAMP,LOOP:0.062 INCH DIA	80009	343-0088-00
-25	131-0589-00			4	. . TERMINAL,PIN:0.46 L X 0.025 SQ	80009	131-0589-00
-26	131-0608-00			4	. . TERMINAL,PIN:0.365 L X 0.025 PH BRZ GOLD	22526	47357
-27	337-2491-00			1	. . SHIELD,ELEC:CIRCUIT CARD	80009	337-2491-00
-28	131-2096-01			1	. . CONN,RCPT,ELEC:CIRCUIT CARD,25/50 CONT	31781	345-050-520-201
-29	131-2096-00			1	. . CONN,RCPT,ELEC:CIRCUIT CARD,25/50 CONT	00779	2-530372-7
-30	136-0684-00			2	. . SKT,PLUG-IN:I.C. 14 PIN	91506	114-AG2A
-31	129-0216-00	XB020550		3	. . SPACER,POST:0.187 OD,0.312 INCH LONG	80009	129-0216-00
-32	129-0448-00	XB020550		1	. . SPACER,POST:0.610 L,W/4-40 X 0.25 TAP	80009	129-0448-00
-33	179-2547-00			1	. . WIRING HARNESS,:DMM	80009	179-2547-00
-34	131-1810-00			5	. . . CONTACT,ELEC:FEMALE,FOR 0.025 SQ PIN	00779	87124-1
-35	131-0621-00			1	. . . CONNECTOR,TERM:22-26 AWG,BRS& CU BE GOLD	22526	46231
-36	204-0675-00			5	. . . CONN BODY,PLUG:1 LKG CLIP POZ,0.025 SQ PIN	00779	87175-2
-37	352-0197-00			1	. . . CONN BODY,PL,EL:1 WIRE BLACK	80009	352-0197-00
	198-3601-00			1	. . WIRE SET,ELEC:	80009	198-3601-00
-38	----- -----			1	. CKT BOARD ASSY:COUNTER(SEE A9 REPL)		
-39	131-0608-00			25	. . TERMINAL,PIN:0.365 L X 0.025 PH BRZ GOLD	22526	47357
-40	131-0589-00			18	. . TERMINAL,PIN:0.46 L X 0.025 SQ	80009	131-0589-00
-41	131-0993-00			1	. . BUS,CONDUCTOR:2 WIRE BLACK	00779	530153-2
-42	136-0263-04			12	. . SOCKET,PIN TERM:FOR 0.025 INCH SQUARE PIN	22526	75377-001
-43	361-0821-00			5	. . SPACER,SLEEVE:0.92 L X 0.219 OD,BRASS	80009	361-0821-00
-44	136-0254-00			2	. . SOCKET,PIN TERM:0.088 OD X 0.145 INCH LONG	00779	1-331892-5
-45	136-0252-04	XB020550		9	. . SOCKET,PIN TERM:U/W 0.016-0.018 DIA PINS	22526	75060-007
	136-0269-02	XB021200		1	. . SKT,PL-IN ELEK:MICROCIRCUIT,14 DIP,LOW CLE	73803	CS9002-14
	136-0220-00	B010100	B035249X	3	. . SKT,PL-IN ELEK:TRANSISTOR 3 CONTACT,PCB MT	71785	133-23-11-034

Fig. & Index No.	Tektronix Part No.	Serial/Model No. Eff	Dscont	Qty	1 2 3 4 5 Name & Description	Mfr Code	Mfr Part Number
2-46	----- -----			1	. CKT BOARD ASSY:ETCHED TRIGGER(SEE A8 REPL)		
					(ATTACHING PARTS)		
-47	211-0244-00			2	. . SCR,ASSEM WSHR:4-40 X 0.312 INCH,PNH STL	78189	OBD
					- - - * - - -		
-48	129-0198-00			2	. . POST,ELEC-MECH:0.188 HEX X 0.74 INCH L,BRS	80009	129-0198-00
-49	131-2132-00			1	. . TERM.SET,PIN:36 MALE CONTACTS	22526	65506-136
-50	136-0499-08			2	. . CONNECTOR,RCPT,:8 CONTACT	00779	30380949-8
-51	----- ----			1	. CKT BOARD ASSY:COMPARATOR(SEE A4 REPL)		
-52	131-0608-00			43	. . TERMINAL,PIN:0.365 L X 0.025 PH BRZ GOLD	22526	47357
-53	131-2096-00			1	. . CONN,RCPT,ELEC:CIRCUIT CARD,25/50 CONT	00779	2-530372-7
-54	131-2095-00			1	. . CONN,RCPT,ELEC:CKT CARD,15/30 CONT	00779	2-530372-4
-55	131-0993-00			3	. . BUS,CONDUCTOR:2 WIRE BLACK	00779	530153-2
-56	136-0260-02			1	. . SKT,PL-IN ELEK:MICROCIRCUIT,16 DIP,LOW CLE	71785	133-51-92-008
-57	136-0269-02			1	. . SKT,PL-IN ELEK:MICROCIRCUIT,14 DIP,LOW CLE	73803	CS9002-14
-58	351-0522-00			1	. . GUIDE,CKT CARD:BOTTOM AND BACK,PLASTIC	80009	351-0522-00
	198-3600-00			1	. . WIRE SET,ELEC:	80009	198-3600-00
-59	131-0621-00			2	. . . CONNECTOR,TERM:22-26 AWG,BRS& CU BE GOLD	22526	46231
-60	131-0707-00			2	. . . CONNECTOR,TERM:22-26 AWG,BRS& CU BE GOLD	22526	47439
-61	352-0197-00			2	. . . CONN BODY,PL,EL:1 WIRE BLACK	80009	352-0197-00
-62	352-0169-00			1	. . . HLDR,TERM CONN:2 WIRE BLACK	80009	352-0169-00
	672-0628-01	B010100	B036299X	1	. CKT BOARD ASSY:ROTARY SWITCH	80009	672-0628-01
-63	----- -----			1	. CKT BOARD ASSY:I/O (SEE A1 REPL)		
-64	401-0341-02			1	. . BEARING,RTRY SW:REAR,0.315 ID	80009	401-0341-02
					(ATTACHING PARTS)		
-65	211-0034-00			3	. . SCREW,MACHINE:2-56 X 0.50 INCH,PNH	83385	OBD
-66	210-0053-00			3	. . WASHER,LOCK:INTL,0.092 ID X 0.175"OD,STL	83385	OBD
					- - - * - - -		
-67	352-0457-10			1	. . HOLDER,CONTACT:1 CONTACT	80009	352-0457-10
-68	----- -----			1	. . CKT BOARD ASSY:SW #4(SEE A13 REPL)		
-69	131-0589-00			16	. . . TERMINAL,PIN:0.46 L X 0.025 SQ	80009	131-0589-00
-70	131-0592-00			12	. . . CONTACT,ELEC:0.885 INCH LONG	22526	47353
-71	352-0457-09			1	. . HOLDER,CONTACT:2 CONTACTS	80009	352-0457-09
-72	401-0341-02			1	. . BEARING,RTRY SW:REAR,0.315 ID	80009	401-0341-02
-73	361-0831-00			3	. . SPACER,POST:0.65 L,W/2-56BOTH ENDS,NYLON	80009	361-0831-00
-74	----- -----			1	. . CKT BOARD ASSY:SW #3(SEE A12 REPL)		
-75	136-0263-04			3	. . . SOCKET,PIN TERM:FOR 0.025 INCH SQUARE PIN	22526	75377-001
-76	352-0457-07			1	. . HOLDER,CONTACT:1 CONTACT	80009	352-0457-07
-77	361-0827-00			2	. . SPACER,CKT BD:ROTARY SWITCH	80009	361-0827-00
-78	352-0457-06			1	. . HOLDER,CONTACT:1 CONTACT	80009	352-0457-06
-79	129-0642-00			1	. . POST,BDG,ELEC:PROBE CAL	80009	129-0642-00
					(ATTACHING PARTS)		
-80	211-0008-00	B010100	B022049	1	. . SCREW,MACHINE:4-40 X 0.25 INCH,PNH STL	83385	OBD
-81	210-0004-00	B010100	B022049	1	. . WASHER,LOCK:#4 INTL,0.015THK,STL CD PL	78189	OBD
	211-0292-00	B022050		1	. . SCR,ASSEM WSHR:4-40 X 0.29,BRS NI PL	78189	OBD
					- - - * - - -		
-82	103-0198-00			3	. . ADAPTER,PROBE:INPUT	80009	103-0198-00
					(ATTACHING PARTS)		
-83	211-0244-00	B010100	B022049	6	. . SCR,ASSEM WSHR:4-40 X 0.312 INCH,PNH STL	78189	OBD
	211-0292-00	B022050		6	. . SCR,ASSEM WSHR:4-40 X 0.29,BRS NI PL	78189	OBD
					- - - * - - -		
-84	131-1958-00			3	. . CONN,RCPT,ELEC:CKT CARD MOUNTED	80009	131-1958-00
					(ATTACHING PARTS FOR EACH)		
-85	220-0407-00			3	. . NUT,SLFLKG,HEX:6-32 X 0.312 HEX,STL	22599	22NM-62
-86	210-0055-00			3	. . WASHER,LOCK:SPLIT,0.145 ID X 0.253 OD,STL	83385	OBD
-87	210-1092-00			3	. . WASHER,FLAT:0.147 ID X 0.312" OD,BRS	12327	OBD
					- - - * - - -		
-88	131-1652-01			1	. . CONN,RCPT,ELEC:"LEMO" TYPE,1MALE,1 FEMALE	80009	131-1652-01
					(ATTACHING PARTS)		
-89	210-0583-00			1	. . NUT,PLAIN,HEX:0.25-32 X 0.312 INCH,BRS	73743	2X20317-402
-90	210-0046-00			2	. . WASHER,LOCK:0.261 ID,INTL,0.018 THK,BRS	78189	1214-05-00-0541C
					- - - * - - -		
-91	129-0666-00			2	. . SPACER,POST:0.570 L,W/4-40 THD THRU,BRS	80009	129-0666-00
-92	131-0589-00			7	. . TERMINAL,PIN:0.46 L X 0.025 SQ	80009	131-0589-00
-93	131-0593-00			2	. . CONTACT,ELEC:1.15 INCH LONG	22526	47354
-94	131-0993-00			4	. . BUS,CONDUCTOR:2 WIRE BLACK	00779	530153-2
-95	131-0608-00			13	. . TERMINAL,PIN:0.365 L X 0.025 PH BRZ GOLD	22526	47357
-96	214-0579-00			12	. . TERM,TEST POINT:BRS CD PL	80009	214-0579-00

Fig. & Index No.	Tektronix Part No.	Serial/Model No. Eff	Dscont	Qty	1 2 3 4 5 Name & Description	Mfr Code	Mfr Part Number
2-97	131-2127-00			7	. . TERMINAL,CMPNT:4-HOLES,BRONZE	98291	011-6808-000-209
-98	129-0666-00			2	. . SPACER,POST:0.570 L,W/4-40 THD THRU,BRS	80009	129-0666-00
-99	136-0671-00	B010100	B022269	2	. . SOCKET,PLUG-IN:MICROCKT,36 CONTACTS	73803	C 9136-00
	136-0671-01	B022270		2	. . SKT,PL-IN ELEK:LED,36 DIP,LOW PROFILE	71279	703-4061-01-0416
-100	361-0830-00	B010100	B022269	4	. . SPACER,SOCKET:0.235 L X 0.04 ID,PLASTIC	80009	361-0830-00
	361-0830-01	B022270		4	. . SPACER,SOCKET:0.17 THK X 0.25 OD,PLASTIC	80009	361-0830-01
	361-0928-00	XB021225	B022269	2	. . SPACER,SOCKET:	80009	361-0928-00
	361-0929-00	B022270		2	. . SPACER,SOCKET:	80009	361-0929-00
-101	131-0566-00			3	. . BUS CONDUCTOR:DUMMY RES,2.375,22 AWG	55210	L-2007-1
-102	337-2400-00			1	. . SHIELD,ELEC:IO/DMM #1	80009	337-2400-00
-103	337-2399-00			1	. . SHIELD,ELEC:IO/DMM # 2:IO/DMM #2	80009	337-2399-00
	198-3806-00			1	. . WIRE SET,ELEC:	80009	198-3806-00
-104	352-0457-08			1	. . HOLDER,CONTACT:2 CONTACTS	80009	352-0457-08
-105	361-0827-00			1	. . SPACER,CKT BD:ROTARY SWITCH	80009	361-0827-00
-106	352-0457-00			1	. . HOLDER,CONTACT:ROTARY SWITCH D,GRAY PC	80009	352-0457-00
-107	----- -----			1	. . CKT BOARD ASSY:SW #1(SEE A11 REPL)		
-108	131-0787-00			3	. . . CONTACT,ELEC:0.64 INCH LONG	22526	47359
-109	352-0457-11			1	. . HOLDER,CONTACT:2 CONTACTS	80009	352-0457-11
-110	211-0663-00			3	. . SCREW,MACHINE:2-56 X 1.125,PPH,STL CD PL	000BK	OBD
-111	210-0053-00			3	. . WASHER,LOCK:INTL,0.092 ID X 0.175"OD,STL	83385	OBD
-112	214-1126-02			1	. . SPRING,FLAT:RED COLORED	80009	214-1126-02
-113	214-1126-01			1	. . SPRING,FLAT:0.7 X 0.125,CU BE GRN CLR	80009	214-1126-01
-114	214-1127-00			1	. . ROLLER,DETENT:0.125 DIA X 0.125,SST	80009	214-1127-00
-115	401-0340-01			1	. . BEARING,RTRY SW:FRONT,0.375 DIA	80009	401-0340-01
-116	384-1458-01			1	. . SHAFT,ROTARY SW:0.766 L X 0.248 OD,PLSTC	80009	384-1458-01
	198-3807-00			1	. . WIRE SET,ELEC:	80009	198-3807-00
	131-0621-00			2	. . . CONNECTOR,TERM:22-26 AWG,BRS& CU BE GOLD	22526	46231
	131-0707-00			2	. . . CONNECTOR,TERM:22-26 AWG,BRS& CU BE GOLD	22526	47439
	352-0169-04			1	. . . CONN BODY,PL,EL:2 WIRE YELLOW	80009	352-0169-04
	352-0197-00			2	. . . CONN BODY,PL,EL:1 WIRE BLACK	80009	352-0197-00
	650-0080-00			1	. . VAR RES ASSY:	80009	650-0080-00
					(ATTACHING PARTS)		
-117	210-0583-00			4	. . NUT,PLAIN,HEX:0.25-32 X 0.312 INCH,BRS	73743	2X20317-402
-118	210-0940-00			4	. . WASHER,FLAT:0.25 ID X 0.375 INCH OD,STL	79807	OBD
-119	220-0495-00			4	. . NUT,PLAIN,HEX.:0.375-32 X 0.438 INCH BRS	73743	OBD
-120	210-0978-00			1	. . WASHER,FLAT:0.375 ID X 0.50 INCH OD,STL	78471	OBD
					- - - * - - -		
	----- -----			-	. . VAR.,RES ASSY INCLUDES:		
-121	----- -----			4	. . . RES.,. VAR,NONWIR:(SEE R70,R74,R160,R165 REPL)		
-122	----- -----			1	. . . RES.,VAR,NONWIR:(SEE R169 REPL)		
	198-3602-00			1	. . . WIRE SET,ELEC:	80009	198-3602-00
-123	131-0707-00			24	. . . . CONNECTOR,TERM:22-26 AWG,BRS& CU BE	22526	47439
-124	175-0827-00			FT	. . . . CABLE,SP,ELEC:4,26 AWG,STRD,PVC JKT,RBN	08261	SS04267(1061)0C
-125	175-0831-00			FT	. . . . WIRE,ELECTRICAL:8 WIRE RIBBON	08261	SS-0826-710610C
-126	352-0162-01			1	. CONN BODY,PL,EL:4 WIRE BROWN	80009	352-0162-01
	352-0162-02			1	. CONN BODY,PL,EL:4 WIRE RED	80009	352-0162-02
	352-0162-03			1	. CONN BODY,PL,EL:4 WIRE ORANGE	80009	352-0162-03
	352-0162-04			1	. CONN BODY,PL,EL:4 WIRE YELLOW	80009	352-0162-04
-127	352-0166-05			1	. CONN BODY,PL,EL:8 WIRE GREEN	80009	352-0166-05
	198-3808-00			1	WIRE SET,ELEC:	80009	198-3808-00
-128	131-0707-00			32	. CONNECTOR,TERM:22-26 AWG,BRS& CU BE GOLD	22526	47439
-129	131-1810-00			46	. CONTACT,ELEC:FEMALE,FOR 0.025 SQ PIN	00779	87124-1
-130	175-0863-00			FT	. WIRE,ELECTRICAL:2 WIRE RIBBON	08261	SS-0222-7(1061)
-131	175-0827-00			FT	. CABLE,SP,ELEC:4,26 AWG,STRD,PVC JKT,RBN	08261	SS04267(1061)0C
-132	175-0829-00			FT	. WIRE,ELECTRICAL:6 WIRE RIBBON	08261	SS-0626-710610C
-133	175-0858-00			FT	. WIRE,ELECTRICAL:7 WIRE RIBBON	08261	SS-0722-7(1061)
-134	175-0833-00			FT	. WIRE,ELECTRICAL:10 WIRE RIBBON	08261	SS-1026-7
	175-0855-00			FT	. WIRE,ELECTRICAL:10 WIRE RIBBON	08261	SS-1022(1061)0C
-135	204-0739-00			2	. CONN BODY,PLUG:2 CONTACTS,SGL ROW,LKG CLIP	00779	87175-6

Fig. & Index No.	Tektronix Part No.	Serial/Model No. Eff	Dscont	Qty	1 2 3 4 5 Name & Description	Mfr Code	Mfr Part Number
2-136	204-0736-00			2	. CONN BODY,PLUG:4 CONTACTS,SGL ROW,LKG CLIP	00779	1-87175-0
-137	204-0761-00			2	. CONN BODY,RCPT:7 CONTACTS	00779	1-87175-5
-138	204-0760-00			2	. CONN BODY,RCPT:10 CONTACTS	00779	2-87175-1
-139	352-0164-01			2	. CONN BODY,PL,EL:6 WIRE BROWN	80009	352-0164-01
-140	352-0168-00			1	. CONN BODY,PL,EL:10 WIRE BLACK	80009	352-0168-00
	352-0168-01			1	. HLDR,TERM CONN:10 WIRE,BROWN	80009	352-0168-01
	198-4093-00			1	. WIRE SET,ELEC:	80009	198-4093-00

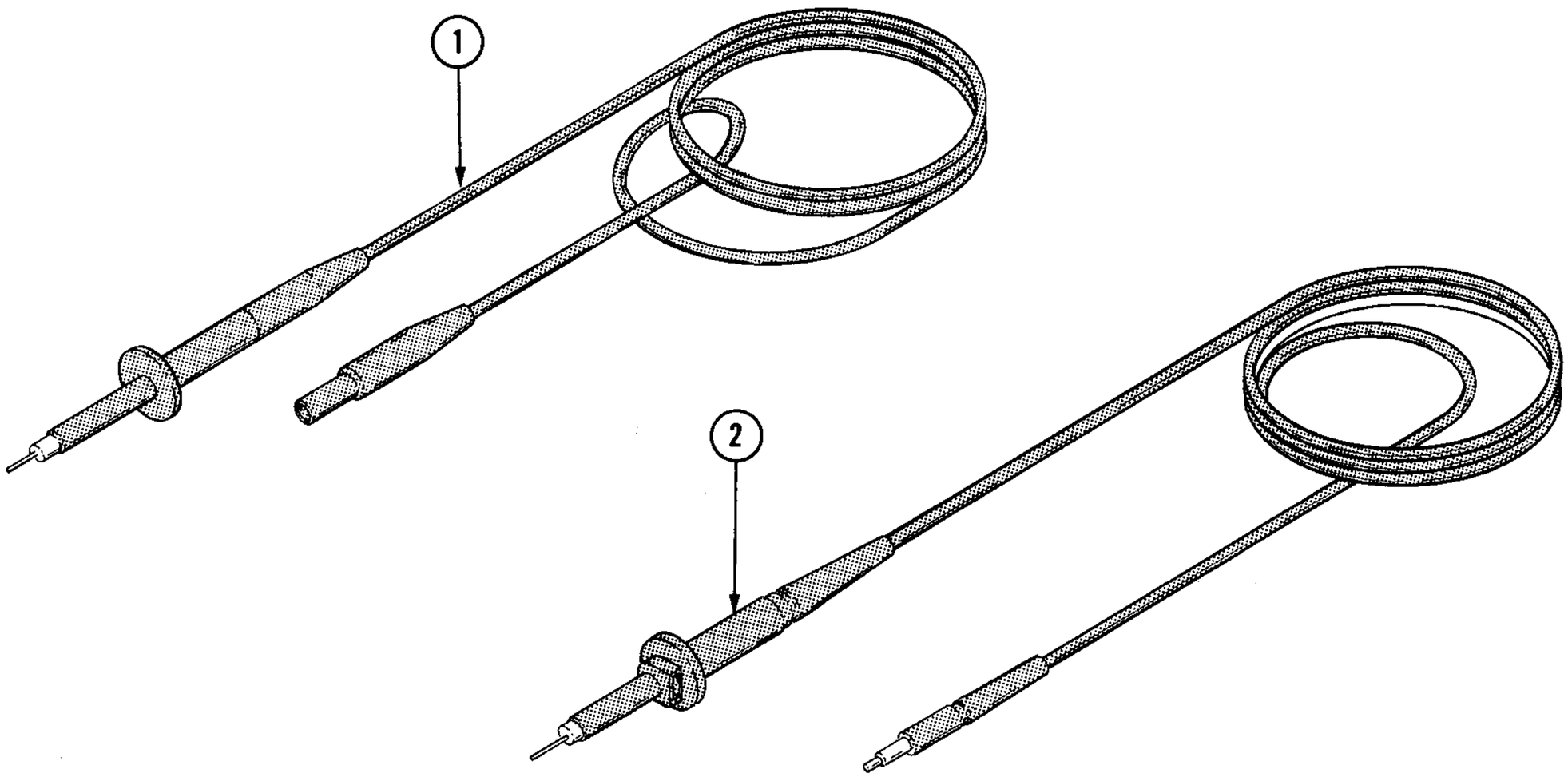

Fig. & Index No.	Tektronix Part No.	Serial/Model No. Eff	Dscont	Qty	1 2 3 4 5	Name & Description	Mfr Code	Mfr Part Number
						STANDARD ACCESSORIES		
3-1	012-0732-00			1		LEAD SET,ELEC:	80009	012-0732-00
-2	010-0280-00			3		PROBE PACKAGE:2 METER,YELLOW,W/ACCESS	80009	010-0280-00
	----- -----			2		FUSE,CARTRIDGE:(SEE F1300 EPL)		
	070-2193-00			1		MANUAL,TECH:OPERATORS	80009	070-2193-00
	070-2192-01			1		MANUAL,TECH:SERVICE	80009	070-2192-01
						OPTIONAL ACCESSORIES		
	010-6430-00			1		PROBE,TEMP:P6430,1.5 METER L,W/ACCESS	80009	010-6430-00
	016-0639-00			1		COVER,PROT:BLUE VINYL	80009	016-0639-00

MANUAL CHANGE INFORMATION

At Tektronix, we continually strive to keep up with latest electronic developments by adding circuit and component improvements to our instruments as soon as they are developed and tested.

Sometimes, due to printing and shipping requirements, we can't get these changes immediately into printed manuals. Hence, your manual may contain new change information on following pages.

A single change may affect several sections. Since the change information sheets are carried in the manual until all changes are permanently entered, some duplication may occur. If no such change pages appear following this page, your manual is correct as printed.

Tektronix®
COMMITTED TO EXCELLENCE

MANUAL CHANGE INFORMATION

Date: 1-6-82 Change Reference: M40329 & M42499 Revision 2

Product: 851 Digital Tester Service Manual Part No.: 070-2192-01

DESCRIPTION

REPLEACEABLE ELECTRICAL PARTS LIST AND SCHEMATIC DIAGRAM CHANGES

CHANGE TO:

M42499	A9	670-4829-03	CKT BOARD ASSY:COUNTER
M42499	R812	315-0473-00	RES.,FXD,CMPSN:47K OHM,5%,0.25W
M42499	R930	315-0620-00	RES.,FXD,CMPSN:62 OHM,5%,0.25W
M42499	R932	315-0103-00	RES.,FXD,CMPSN:10K OHM,5%,0.25W
M40329	U806	156-0043-01	MICROCIRCUIT,DI:QUAD 2-INPUT NOR GATE

ADD to 670-4829-03:

M42499	C934	283-0177-00	CAP.,FXD,CER DI:1UF,+80-20%,25V
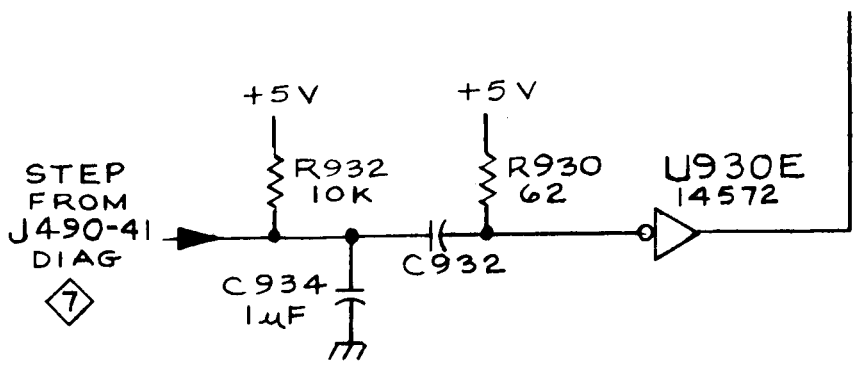
ALL the above parts are located on the A9 COUNTER circuit board assembly. R812 & U806 are shown on diagram 7 COUNTER GATE, COUNTER SOURCE SELECT and C934, R930 & R932 are shown on diagram 9 AUTORANGE LOGIC. See partial below for added C934 of diagram 9.