TEKTRONIX®

D40
SINGLE BEAM
DISPLAY UNIT

INSTRUCTION MANUAL

Tektronix, Inc.
P.O. Box 500
Beaverton, Oregon 97005

Serial Number _____

070-1448-00

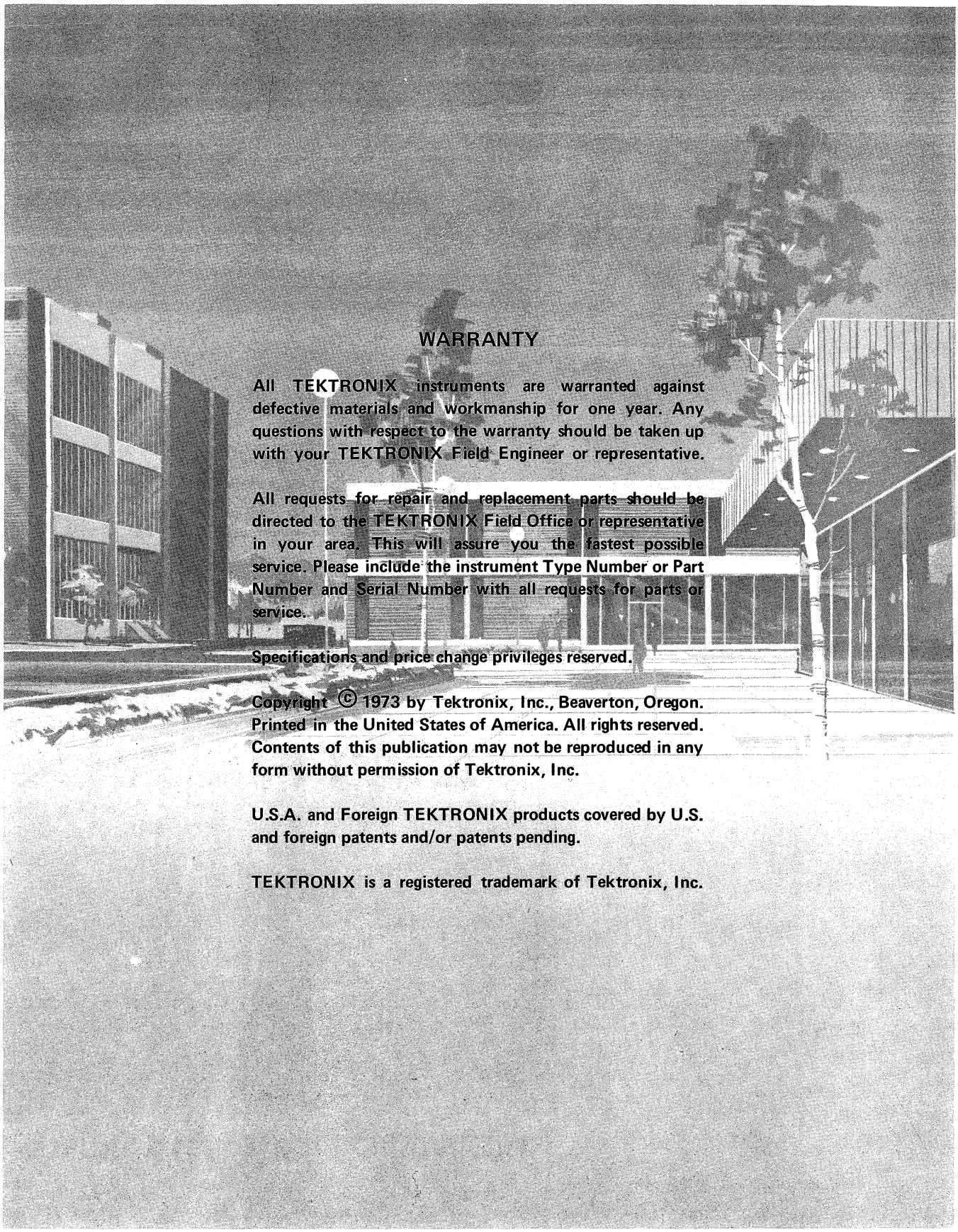

WARRANTY

All TEKTRONIX instruments are warranted against defective materials and workmanship for one year. Any questions with respect to the warranty should be taken up with your TEKTRONIX Field Engineer or representative.

All requests for repair and replacement parts should be directed to the TEKTRONIX Field Office or representative in your area. This will assure you the fastest possible service. Please include the instrument Type Number or Part Number and Serial Number with all requests for parts or service.

Specifications and price change privileges reserved.

Copyright © 1973 by Tektronix, Inc., Beaverton, Oregon. Printed in the United States of America. All rights reserved. Contents of this publication may not be reproduced in any form without permission of Tektronix, Inc.

U.S.A. and Foreign TEKTRONIX products covered by U.S. and foreign patents and/or patents pending.

TEKTRONIX is a registered trademark of Tektronix, Inc.

TABLE OF CONTENTS

		Page
SECTION 0	INSTALLATION PROCEDURE	0-1
SECTION 1	OPERATING INSTRUCTIONS	
	BASIC OPERATION	
	Setup Information	1-1
	Calibration Check	1-2
	Readout	1-2
	Beam Finder	1-2
	External Intensity Input	1-2
	GENERAL OPERATING INFORMATION	
	Graticule	1-2
	Intensity Control	1-2
	Display Focus	1-3
	Trace Alignment Adjustment	1-3
	Beam Finder	1-3
	Readout (Works Only With 5400-Series Plug-In Units)	1-3
	Option 3, Externally Programmed	1-4
	Seventh and Eighth Readout Words	
	Intensity Modulation	1-4
	Calibrator	1-4
	Display Photography	1-4
	Oscilloscope Applications	1-4
SECTION 2	THEORY OF OPERATION	
	Z-AXIS AMPLIFIER AND CRT CIRCUIT	
	Z-Axis Amplifier	2-1
	High-Voltage Regulator	2-1
	High-Voltage Outputs	2-1
	CRT Control Circuits	2-2
	HORIZONTAL AMPLIFIER	
	Input Amplifier	2-2
	Output Amplifier	2-2
	VERTICAL AMPLIFIER	
	Delay Line	2-3
	Amplifier	2-3

		Page
SECTION 3	SERVICE INFORMATION	
	SPECIFICATIONS	
	Table 3-1—5403-D40 Vertical Amplifier	3-1
	Table 3-2—5403-D40 Horizontal Amplifier	3-1
	Table 3-3—D40 Z-Axis Amplifier	3-2
	Table 3-4—D40 Cathode-Ray Tube	3-2
	Table 3-5—5403-D40 Power Supply and Calibrator	3-2
	Table 3-6—5403-D40 Readout	3-3
	Table 3-7—D40 Miscellaneous	3-3
	Table 3-8—5403-D40 Environmental	3-3
	Table 3-9—5403-D40 Physical	3-4
	Symbols & Reference Designators	3-5
	Electrical Parts List	3-6
	Controls and Connectors Illustration	
	Adjustments	
	High-Voltage Power Supply Circuit Board	
	Horizontal Circuit Board	
	Vertical Circuit Board	
	Operational Checks	
	Block Diagram	
	Parts Location Grid—Vertical & Horizontal Amplifiers (Back side of foldout)	
	Vertical Amplifier Diagram	
	Horizontal Amplifier Diagram	
	Parts Location Grid—High-Voltage Power Supply (Back side of foldout)	
	Z-Axis Amplifier & CRT Circuit Diagram	
	Parts Location Grid Front-Panel Circuit Board	
	Interconnect and Voltage Distribution Diagram	
	Mechanical Parts List	
	Fig. 1 Exploded View	
	Accessories and Repackaging	

INSTALLATION PROCEDURE

Before you start

1. Check the power supply/amplifier module rear panel markings. If the factory settings are compatible with the available line voltage and frequency, insert the desired plug-ins. Use the bail to raise the front of the instrument.

...go to Operating Instructions...

2. If a change is needed, follow these steps:

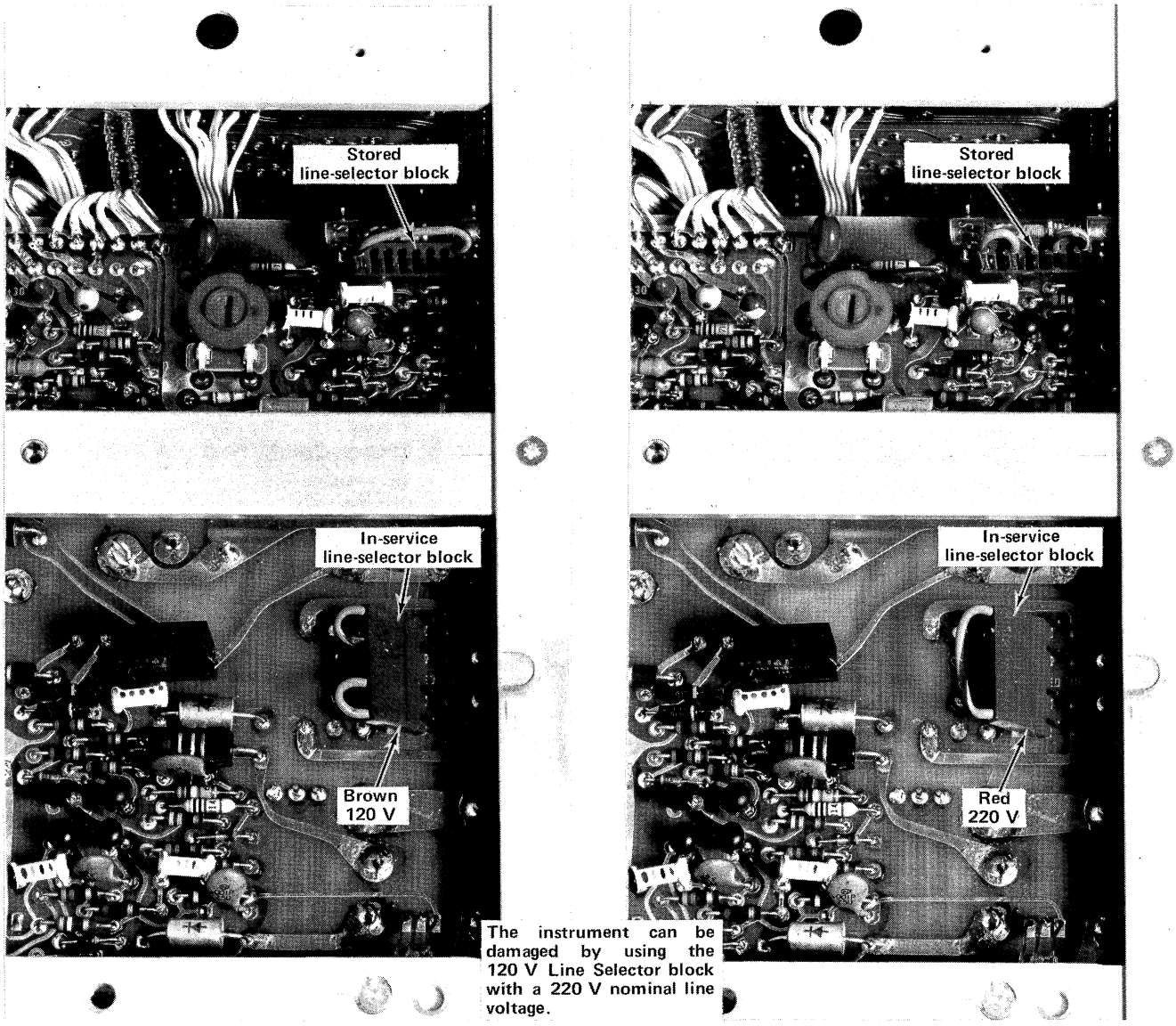

Fig. 0-1. Illustration showing a portion of power supply/amplifier module's L.V. power supply circuit board.

a. Line Selector Block(s)

Remove the Scope-Mobile retainer blocks and their screws, then remove the bottom dust cover from the power supply/amplifier module by turning the four slotted fasteners a quarter turn counterclockwise. This gives easy access to the Line Selector blocks located on the LV power supply circuit board.

Regulating Ranges for Power Transformer

Line Selector Block Position	Regulating Ranges	
	120 Volts Nominal	220 Volts Nominal
L	90 VAC to 110 VAC	180 VAC to 220 VAC
M	99 VAC to 121 VAC	198 VAC to 242 VAC
H	108 VAC to 132 VAC	216 VAC to 264 VAC
Line Fuse Data	1.25 A slow-blow	0.7 A slow-blow

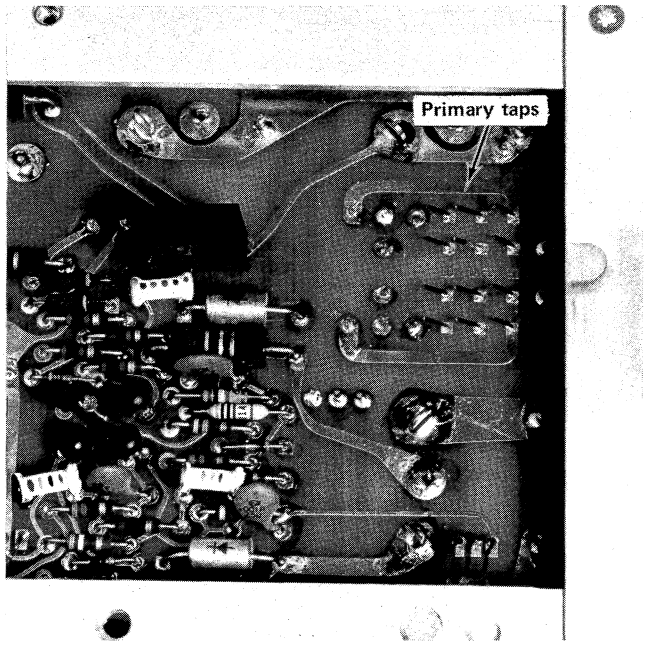

Fig. 0-2. Primary taps area of power supply/amplifier module's L.V. power supply circuit board.

b. Line Range Taps

c. Rear Panel

3. Replace the bottom dust cover and the two Scope-Mobile retainer blocks on the power supply/amplifier module.

4. If necessary, change the line cord power plug to match the power source receptacle or use an adapter.

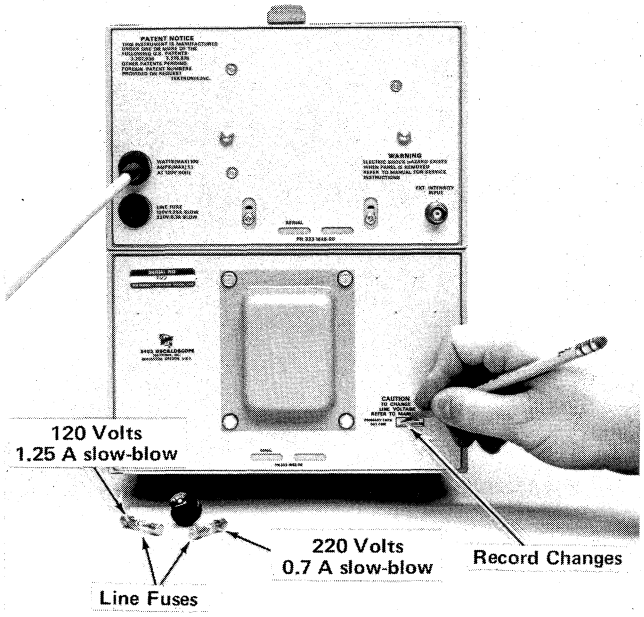

Fig. 0-3. View showing rear-panel of power supply/amplifier module.

5. Plug the cord into the power source.

6. Insert the desired plug-ins.

7. Use the bail to raise the front of the instrument.

...go to Operating Instructions...

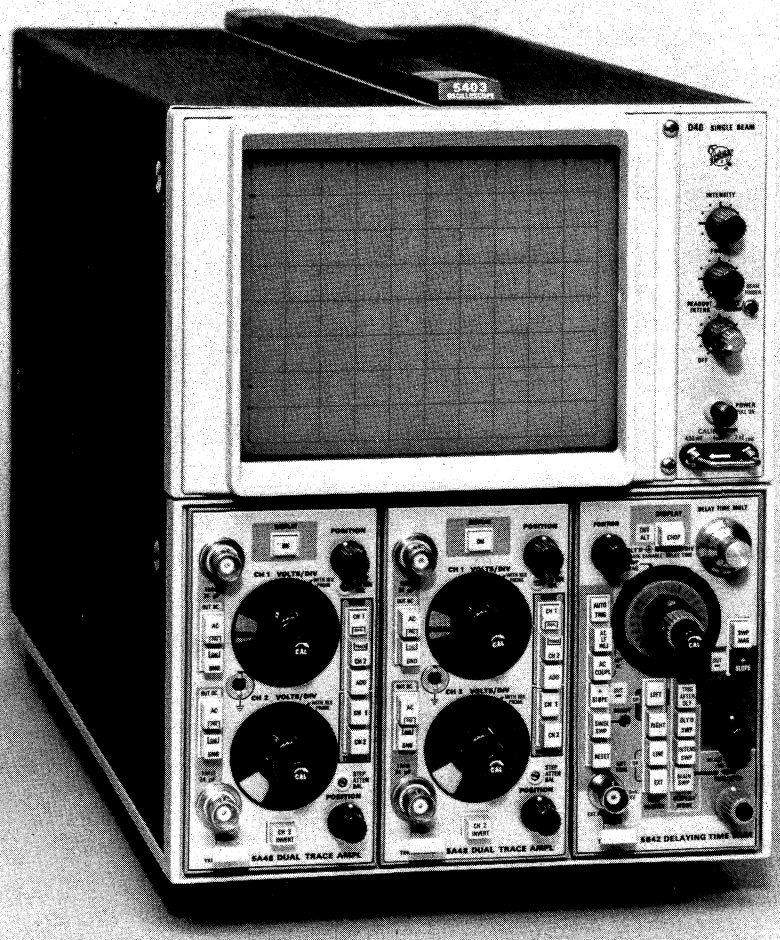
5403
OSCILLOSCOPE
D40 SINGLE BEAM
INTENSITY
READOUT INTENS
FOCUS
POWER
CH 1 VOLTS/DIV
CH 2 VOLTS/DIV
5A48 DUAL TRACE AMPL
5A48 DUAL TRACE AMPL
DELAY TIME SHIFT
5B42 DELAYING TIME

Ⓐ

OPERATING INSTRUCTIONS

The D40 Single Beam display module operates with a Tektronix 5400-series power supply/amplifier module to form an oscilloscope mainframe. This section gives a familiarization procedure, and general operating information.

The Installation section of the 5403 instruction manual should be referred to for initial preparation. It contains information for installation of plug-ins, correct operating voltage and temperature, and general oscilloscope usage.

A brief description of the function of the front and rear panel controls and connectors is given on the controls and connectors foldout page. More detailed information is given under General Operating Information.

BASIC OPERATION

Setup Information

The following steps demonstrate the use of the controls and connectors of the D40.

1. Make sure the oscilloscope system is complete. The D40 must be properly connected to the power supply/amplifier module. A 5A-series amplifier plug-in should be in one of the vertical (left or center) plug-in compartments and a 5B-series time-base plug-in should be in the horizontal (right) compartment.

2. Set the POWER switch to off (pushed in) and connect the D40 to a power source that meets the voltage and frequency requirements of this instrument. See Installation section in this manual, or in the 5403 manual.

3. Turn the INTENSITY and READOUT INTENS controls counterclockwise and pull the POWER switch out to turn the instrument on. Set the front-panel controls as follows:

D40

Amplifier Plug-In

Display	On
Position	Centered
CH1 Volts/Div	.1
CH1 Variable Volts/Div	Cal (fully clockwise)
CH1 Input Coupling	DC
Trigger	CH1
Mode	CH1

Time-Base Plug-In

Display	Alternate (Button out)
Position	Centered
Main Sec/Div	5 ms
Variable Seconds/Div	Cal (fully clockwise)
Mag	Off (Button out)
Main Trig Level	Counterclockwise
Source	Left (or Right if the amplifier plug-in is in the center compartment)
Coupling	Auto Trig, AC Coupl, + Slope,
Mode	Main Sweep

4. Advance the INTENSITY control until the trace is at the desired viewing level. The trace should appear near the graticule center.

5. Connect a 1X probe or test lead from the CALIBRATOR loop to the amplifier plug-in input connector.

6. Turn the Main Trig Level control clockwise until a stable display is obtained. Adjust the vertical and horizontal Position controls so that the display is centered vertically and starts at the left edge of the graticule.

7. Adjust the FOCUS control for a sharp, well-defined display over the entire trace length.

8. Disconnect the input signal and position the trace vertically so that it coincides with the center horizontal line of the graticule.

9. If the trace is not parallel with the center horizontal line, see Trace Alignment Adjustment in this section.

10. Rotate the GRAT ILLUM control throughout its range and notice that the graticule lines are illuminated as the control is turned clockwise. Set control so graticule lines are illuminated as desired.

Calibration Check

11. Move the trace two divisions below graticule center and reconnect the calibrator signal to the amplifier plug-in input connector.

12. The display should be four divisions in amplitude with six complete cycles (five complete cycles for 50-hertz line frequency) shown horizontally. An incorrect display indicates that the oscilloscope mainframe or plug-ins need to be recalibrated.

Readout

13. Turn the READOUT INTENS control clockwise until an alpha-numeric display is visible within the top or bottom division of the CRT (reset the FOCUS adjustment if necessary for best definition of the readout). Change the Volts/Div switch of the amplifier plug-in that is selected for display. Notice that the readout portion of the display changes as the deflection factor is changed. Likewise, change the Sec/Div switch of the time-base unit that is selected for display. Notice that the readout display for the time-base unit changes also as the sweep rate is changed.

14. Set the time-base unit for magnified operation. Notice that the readout display changes to indicate the correct magnified sweep rate. If a readout-coded 10X probe is available for use with the vertical unit, install it on the input connector of the vertical plug-in. Notice that the deflection factor indicated by the readout is increased by 10 times when the probe is added. Return the time-base unit to normal sweep operation and disconnect the probe.

15. Notice that the readout from a particular plug-in occupies a specific location on the display area. If either of the vertical plug-in units is a dual-trace unit, notice that the readout for channel 2 appears within the lower division of the CRT below the readout for channel 1.

Beam Finder

16. Move the display off-screen with the vertical position control.

17. Push the BEAM FINDER button and observe that the display compresses into the screen area. Reposition the display to screen center and release the BEAM FINDER button.

External Intensity Input

18. Connect a 5 volt, 1 kHz sine-wave or square-wave signal to the EXT INTENSITY INPUT connector on rear panel of D40. Also, use the signal to externally trigger the time-base plug-in.

19. Slowly rotate the INTENSITY control counterclockwise until the trace appears to be a series of dimmed and brightened segments. The brightened segments correspond with the tops of the calibrator squarewaves.

This completes the description of the basic operating procedure for the D40. Instrument operations not explained here, or operations which need further explanation are discussed under General Operating Information.

GENERAL OPERATING INFORMATION

Graticule

The graticule of the D40 is internally marked on the faceplate of the CRT to provide accurate, parallax-free measurements. The graticule is marked with eight vertical and ten horizontal divisions. Each division is 1.22 cm by 1.22 cm. In addition, each major division is divided into five minor divisions. The vertical gain and horizontal timing are calibrated to the graticule so that accurate measurements can be made from the graticule. The illumination of the graticule lines can be varied with the GRAT ILLUM control.

Intensity Control

The intensity of the display on the CRT is controlled by the INTENSITY control. This control is adjusted so the display is easily visible but not overly bright. It will probably require readjustment for different displays or sweep rates. Particular care should be exercised when only a spot is displayed. A high-intensity spot may burn the CRT phosphor and cause permanent damage to the CRT if allowed to remain too long.

Display Focus

If a well-defined display cannot be obtained with the FOCUS control, even at low intensity settings, adjustment of the internal astigmatism control may be required.

To check for proper setting of the Astig control, slowly turn the FOCUS control through the optimum setting with a signal displayed on the CRT screen. If the Astig control is correctly set, the vertical and horizontal portions of the trace will come into sharpest focus at the same position of the FOCUS control.

Trace Alignment Adjustment

If a free-running trace is not parallel with the horizontal graticule lines, set the Trace Rotation adjustment (internal adjustment) as follows: Position the trace to the center horizontal line and adjust the Trace Rotation adjustment so that the trace is parallel with the horizontal graticule lines.

Beam Finder

The BEAM FINDER switch provides a means of locating a display that overscans the viewing area either vertically or horizontally. When the BEAM FINDER switch is pressed, the display is compressed within the graticule area and the display intensity is increased. To locate and reposition an overscanned display, use the following procedure:

1. Press the BEAM FINDER switch, hold it in, then increase the vertical and horizontal deflection factors until the display is within the graticule area.

2. Adjust the vertical and horizontal position controls to center the display about the vertical and horizontal centerlines.

3. Release the BEAM FINDER switch; the display should remain within the viewing area.

Readout (Works Only With 5400-Series Plug-In Units)

The readout system of the power supply/amplifier and display modules allows alpha-numeric display of information on the CRT, along with the analog waveform displays. The information displayed by the readout system is obtained from the plug-in units that are installed in the plug-in compartments. The characters of the readout display are written by the CRT beam on a time-shared basis with the signal waveforms.

The Readout System operates in a free-running mode to interrupt the waveform display to present characters. The waveform display is interrupted for only about 20 microseconds for each character that is displayed.

The readout information from each plug-in is called a word. Up to six (eight with option 3) words of readout information can be displayed on the display module (a seventh and eighth word are available when option 3 is installed). The location at which each readout word is presented is fixed and is directly related to the plug-in unit and channel from which it originated. Fig. 1-1 shows the area of the graticule where the readout from each plug-in unit channel is displayed (external readout programming is available only with option 3). Notice that the readout from channel 1 of each plug-in unit is displayed within the top division of the graticule and the readout from channel 2 is displayed directly below within the bottom division of the graticule. Only the readout from plug-in channels that are selected by display switches, or by the mode switches of dual-channel plug-ins, appear in the readout display.

The READOUT INTENS control determines the intensity of only the readout portion of the display independent of the other traces. The readout system is inoperative in the fully counterclockwise OFF position. This may be desirable when the top and bottom divisions of the graticule are to be used for waveform display, or when the trace interruptions necessary to display characters do not allow a satisfactory waveform display to be obtained.

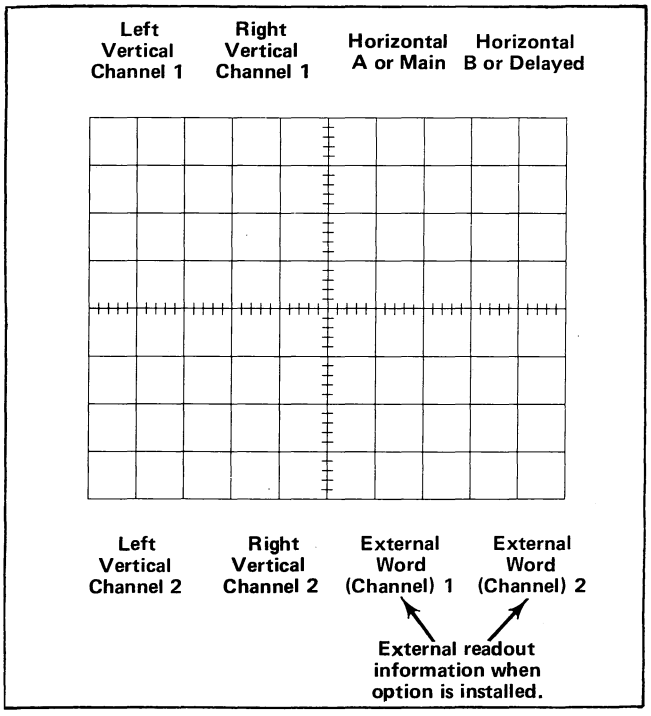

Fig. 1-1. Location of readout on the CRT identifing the originating plug-in unit and channel (and external, if Option 3 is installed).

Option 3, Externally Programmed Seventh and Eighth Readout Words

This option adds a 25-pin connector to the rear-panel of the display module, through which two ten-character readout words can be displayed on the CRT, see Fig. 1-1.

Intensity Modulation

Intensity (Z-Axis) modulation can be used to relate a third item of electrical phenomena to the vertical (Y-Axis) and the horizontal (X-Axis) coordinates without affecting the waveshape of the displayed signal. The Z-Axis modulating signal, applied to the EXT INTENSITY INPUT, changes the intensity of the displayed waveform to provide this type of display. The voltage amplitude required for visible trace modulation depends on the setting of the INTENSITY control. About +5 volts will turn on the display to a normal brightness level from an off level, and about −5 volts will turn the display off from a normal brightness level. "Gray scale" intensity modulation can be obtained by applying signals between these levels. Maximum safe input voltage is + or −50 volts. Usable frequency range of the Z-Axis circuit is DC to two megahertz.

Time markers applied to the EXT INTENSITY INPUT provide a direct time reference on the display. With uncalibrated horizontal sweep or X-Y operation, the time markers provide a means of reading time directly from the display. However, if the markers are not time-related to the displayed waveform, a single-sweep display should be used (for internal sweep only) to provide a stable display.

Calibrator

The internal calibrator of the D40 provides a convenient signal source for checking basic vertical gain and sweep timing. The calibrator signal is also very useful for adjusting probe compensation, as described in the probe instruction manual. The output square-wave voltage is 400 millivolts, within 1%, and the square-wave current is 4 milliamperes, within 1%. The frequency of the square-wave signal is twice the power-line frequency. The signal is obtained by clipping the probe to the loop.

Display Photography

A permanent record of the CRT display can be obtained with an oscilloscope camera system. The CRT bezel of the D40 provides integral mounting for a Tektronix oscilloscope camera. The instruction manuals for the Tektronix oscilloscope cameras include complete instructions for obtaining waveform photographs.

Oscilloscope Applications

The 5400-series oscilloscope, including its associated display module and plug-in units, provides a very flexible measurement system. Specific applications for the individual plug-ins are described in the manuals for those units. Refer to the Operating Instructions section of the 5403 instruction manual for basic oscilloscope applications, including peak-to-peak AC voltage measurements, instantaneous DC voltage measurements, comparison measurements, time duration measurements, determining frequency, risetime measurements, and phase/difference measurements.

THEORY OF OPERATION

Z-AXIS AMPLIFIER AND CRT CIRCUIT

The CRT circuit produces the high voltage potentials and provides the control circuits necessary for operation of the cathode-ray tube (CRT). The Z-Axis amplifier circuit is included with the CRT circuit discussion, since it sets the intensity of the CRT display.

Z-Axis Amplifier

The Z-Axis amplifier is a current driven, shunt-feedback operational amplifier with a voltage output. The amplifier consists of Q345, Q352, and Q356. The feedback path is from the Q352-Q356 collectors through C350-R349-R350 to the summing point at the base of Q345. Q352 and Q356 are connected as a collector-coupled complementary amplifier that provides a fast linear output signal while consuming minimum quiescent power. Q356 acts as the pull-up transistor and Q352 acts as the pull-down transistor for the amplifier. The output voltage from the amplifier provides the drive signal to control the CRT intensity level through the control-grid supply.

The output voltage level of the Z-Axis amplifier is determined by the voltage drop across R349 and R350 in reference to the voltage level at the summing point for the amplifier (base of Q345). The current through R349-R350 is determined by the input current from any combinations of several sources, such as INTENSITY control, plug-in interface (unblanking, readout unblanking), and from Q320 and Q335. Q320 is an operational amplifier that sets the EXT INTENSITY INPUT connector signal to a level suitable for proper Z-Axis amplifier response. Q335 acts as an electronic switch to cause the CRT display intensity to increase when the BEAM FINDER switch is pushed. Q340 acts an an impedance-matching and bias-setting transitor for the Z-Axis amplifier. CR352 and current limiting resistor R352 act as a protection circuit for the Z-Axis amplifier in case of a high-voltage short.

High-Voltage Regulator

High-Voltage Primary. A repetitive, sinusoidal signal is produced by a regenerative feedback oscillator in the primary of T410 and induced into the secondary. Current drive for the primary winding is furnished by Q410.

The conduction of Q410 is controlled by the collector voltage of Q400.

High-Voltage Regulation. Regulation is accomplished by sampling the −3 kV across voltage divider R395A-R395B. If the output level of the cathode supply goes above the nominal −3 kV (goes more negative), the input base of Darlington transistor Q390 goes negative from its quiescent 0 V. The output of Q390 goes more positive, reducing the conduction of Q400 and Q410. This reduces the peak-to-peak sinusoidal signal amplitude, resulting in a reduced voltage in the secondary of T410. Conversely, if the output drops below −3 kV (goes more positive), Q410 will conduct more, i.e., have a larger sinusoidal signal amplitude. CR395 and C395 form a delay turn-on circuit to prevent the CRT beam from coming on immediately at instrument turn-on. The delay time is controlled by the time it takes C395 to charge to +30.6 V through R397 from the +200 V power supply. At the moment the top of C395 reaches +30.6 V, diode CR395 will turn on and clamp the CR395-C395-R397-R395A junction at 30 V. R402 and C402 limit the bandwidth of the regulator to prevent oscillations.

High-Voltage Outputs

The secondary winding of T410 provides the negative and positive accelerating potentials for the CRT and the bias voltage for the control grid.

Positive accelerating voltage for the CRT anode is supplied by voltage quadrupler U410. The applied voltage to the input of U410 from the T410 secondary winding is about +3 kV peak-to-peak. The output voltage of U410 is about +12 kV at the CRT anode. The negative accelerating voltage for the CRT cathode is also obtained from the T410 secondary winding. CR412 half-wave rectifies the transformer output and supplies the 3 kV to the CRT cathode. R418 connects the CRT cathode voltage to the CRT filament to prevent cathode-to-filament breakdown.

Diodes CR420 and CR422 provide the rectified negative control voltage for the CRT control grid. The output level of this supply is set by the Intens Range adjustment R435. Diodes CR428 and CR430 clip the CRT grid bias voltage from the T410 secondary, to determine the operating level at the control grid. CR428 limits the negative excursions of the bias voltage, depending upon the output voltage of the Z-Axis amplifier the positive clipping level at the cathode of CR430 is set by the Intens Range adjustment. R420 connects the CRT grid voltage to the CRT cathode voltage to ensure that the CRT grid is more negative.

CRT Control Circuits

In addition to the INTENSITY control discussed previously, front-panel FOCUS and internal astigmatism controls have been incorporated for arriving at an optimum CRT display. FOCUS control R440 provides the correct voltage for the second anode in the CRT. Proper voltage for the third anode is obtained by adjusting Astig control R370. In order to obtain optimum spot size and shape, both the FOCUS and Astig controls are adjusted to provide the proper electrostatic lens configuration in the CRT.

The Geom adjustment R365 varies the positive level on the horizontal deflection plate shields to control the overall geometry of the display. The trace rotation control, R375, permits adjustment of the DC current through beam-rotation coil L375 to align the display with the horizontal graticule lines.

HORIZONTAL AMPLIFIER

The horizontal amplifier amplifies the push-pull horizontal deflection signal from the interface circuit board and applies it to the horizontal deflection plates of the CRT.

Input Amplifier

The horizontal signal from the interface circuit board is connected to the bases of Q200 and Q215. Under no-signal conditions, the bases of Q200 and Q215 are within 150 mV of ground. Resistive network R205-R207-R210-R212-R213, between the emitters of Q200 and Q215, controls the emitter degeneration of this stage. R212 provides a means of adjusting the emitter degeneration of the input amplifier and thereby controls the gain of the horizontal amplifier, within ±10%.

To compress an off-screen display so that it may be viewed on the CRT, the BEAM FINDER reduces the dynamic range of the input amplifier. This is done by disconnecting CR208 in the emitter circuitry of Q200-Q215, and supplying a reduced current through current setting resistors R205, R208, and R213.

Resistors R202 and R217 provide thermal compensation for the input amplifier, while R222 provides a means of correcting for differential unbalance in the amplifier or CRT.

Output Amplifier

Transistors Q240-Q244-Q250 and Q270-Q274-Q280 are connected as two separate current-driven feedback amplifiers. Input transistor Q240 (in the left output amplifier) is an NPN transistor for better response to positive-going signals, while input transistor Q270 (in the right output amplifier) is a PNP transistor for better negative-going signal response.

Negative feedback is provided from the collectors of output transistors Q244-Q250-Q274-Q280 to the base of input transistors Q240 and Q270 through feedback networks C242-R242-R238 and C272-R272-R268. Variable capacitors C242 and C272 adjust the transient response of the feedback networks to provide good linearity at fast sweep rates. The Zener diode-fast switching series diode, CR242-VR240 and CR272-VR270 turn on when the sweep passes the right edge of the CRT. This action stops the collectors of the output transistors and shunts out the feedback networks, thus current limiting the output amplifier. Capacitors C240, C250, and C280 are speed-up capacitors to improve the amplifier response to fast changes. Diodes CR246 and CR274 prevent Q244 and Q274 from going into saturation.

VERTICAL AMPLIFIER

The vertical amplifier provides the final amplification for the vertical signal before it is applied to the vertical deflection plates of the CRT. The vertical amplifier circuitry includes the delay line and part of the beam finder circuit, which reduces the final drive to compress an over-scanned display to within the viewing area of the CRT.

Delay Line

Delay line DL100 provides approximately 140 ns of delay for the vertical signal. This allows the time-base circuits time to initiate a sweep before the vertical signal reaches the CRT deflection plates. This delay of the vertical signal allows the leading edge of the signal originating the trigger pulse to be displayed when using internal triggering.

The delay line has a characteristic input impedance of about 50 ohms, or about 100 ohms from side-to-side.

Amplifier

The vertical amplifier consists of a high bandpass three-stage paraphase amplifier having an input sensitivity of approximately 25 mV/division and a voltage gain of about 160. The amplifier is differentially driven at the bases of Q100 and Q125 by the input signal from the delay line. R100 and R125 terminate the delay line.

The first amplifier stage consists of Q100, Q106, Q125, and Q130. The gain of this stage is determined by the ratio of the feedback resistors R104-R103 or R128-R129 and the emitter resistor R111. The networks parallel to the emitter resistor compensates for the signal losses in the delay line. R135 acts as a DC centering control, which compensates for resistive tolerance errors and CRT electrical center error in the vertical amplifier, and allows the mainframe input to be standardized.

The next stage of amplification consists of Q148, Q170, Q165, and Q172. Thermistor RT157 resistor R157 varicap CR146 and capacitor C160 between the emitters of Q148 and Q165 comprise a thermal compensation network to correct for frequency loss with temperature changes. The two RC networks (R151-C156 and R155-C153-C155) in the emitters of Q148 and Q165, and the RCL network in the collectors of Q148 and Q165 provide high frequency compensation.

The final amplifier stage consists of Q180, Q188, Q182, and Q190. R175 provides a means of adjusting the vertical amplifier gain within a ±20% range.

Pushing the BEAM FINDER compresses an off-screen display to determine its location. This is accomplished by turning off Q140, when the BEAM FINDER is pushed, which reduces the standing current in the second amplifier stage. This lowers the voltage drop across R173 and R176, which lowers the standing current in the final amplifier stage. The lower final amplifier stage standing current reduces the possible scan on the CRT.

SERVICE INFORMATION

SPECIFICATIONS

The electrical specifications are valid only if (1) the instrument has been calibrated at an ambient temperature between +20°C and +30°C; (2) the instrument is operating at an ambient temperature between 0°C and +50°C, unless otherwise noted; (3) each plug-in must be operating (fully installed) in a calibrated system.

Unless otherwise stated, specification are referenced to the plug-in connectors of the 5403. Any conditions that are unique to a particular specification are stated as part of that specification.

TABLE 3-1

5403-D40 Vertical Amplifier

Characteristics	Performance Requirements	Supplemental Information
Input Signal Amplitude (Differential)		
Bandwidth	DC to at least 60 MHz with 5A48	
Risetime	5.8 ns with 5A48	3.9 ns
Aberrations	3% when measured with a 5A48	
Vertical Centering		Within ±0.5 division of graticule center
Delay Line Length		140 ns
Modes	Chop and alt	
Rate		
Chop	50 kHz +50% –30%; 3 μs on, 2 μs off.	
Alt	Once every two sweeps	

TABLE 3-2

5403-D40 Horizontal Amplifier

Characteristics	Performance Requirements	Supplemental Information
Bandwidth	DC to at least 2 MHz	Eight division signal used as a reference
Horizontal Centering		Within 0.5 division of graticule center
X-Y Operation	Less than 1° phase shift from DC to at least 20 kHz	

TABLE 3-3

D40 Z-Axis Amplifier

Characteristics	Performance Requirements	Supplemental Information
External Input		
Input Voltage	+5 V turns CRT beam on from off condition –5 V turns CRT beam off from on condition	
Usable Frequency Range	DC to 2 MHz	
Input Impedance	Resistance: 10 kΩ Capacitance: 40 pF	
Maximum Safe Input	50 V (DC + Peak AC)	

TABLE 3-4

D40 Cathode-Ray Tube

Characteristics	Performance Requirements	Supplemental Information
Geometry	Bowing or tilt ≤ 0.1 division	
Orthogonality	90° ±0.7°	
Photographic Writing Rate	90 cm/μs using a C-59 camera and Polariod 3000 speed film	
Phosphor	P31 standard; P7 and P11 optional	
Deflection	Electrostatic, with mesh magnification	
Acceleration Potential	15 kV	

TABLE 3-5

5403-D40 Power Supply and Calibrator

Characteristics	Performance Requirements	Supplemental Information
Power Line Input		
Line Voltage (RMS)	Nominal 100 V, 110 V, 120 V, 200 V, 220 V, 240 V ±10%	
Line Frequency	50 to 400 Hz	
Input Power	100 W maximum at 120 VAC, 60 Hz	
Fuse Data	1.25 A slow blow (120 VAC) 0.7 A slow blow (240 VAC)	
Calibrator		
Voltage	400 mV, ±1%	
Current	4 mA, ±1%	
Frequency	Twice the power line frequency	

TABLE 3-6

5403-D40 Readout

Characteristics	Performance Requirements	Supplemental Information
Intensity Range		Off to full brightness. Readout inoperative when READOUT INTENS fully counterclockwise in detent position.
Location		Top words are displayed in top major graticule division between left and right extreme graticule lines. Bottom words are displayed in bottom major graticule division between left and right extreme graticule lines.

TABLE 3-7

D40 Miscellaneous

Characteristics	Performance Requirements	Supplemental Information
Graticule		
Scale	8 x 10 divisions with 1.22 cm/Div	
Scale Color and Type		
Normal	White internal graticule lines	
Optional	Black internal graticule lines	
Beam Finder	Brings trace within viewing area and intensifies trace	

TABLE 3-8

5403-D40 Environmental

Characteristics	Performance Requirements	Supplemental Information
Temperature		
Operating	0°C to +50°C	
Storage	–40°C to +70°C	
Altitude		
Operating	To 15,000 feet	
Storage	To 50,000 feet	
Vibration		
Operating and Non-Operating	With the instrument complete and operating, vibration frequency swept from 10 to 50 to 10 Hz at 1 minute per sweep. Vibrate 15 minutes in each of the three major axes at 0.015" total displacement. Hold 3 minutes at any major resonance, or if none, at 50 Hz. Total time, 54 minutes	

TABLE 3-8 (cont)

Characteristics	Performance Requirements	Supplemental Information
Shock		
Operating and Non-Operating	30 g's, 1/2 sine, 11 ms duration, 2 shocks in each direction along 3 major axes for a total of 12 shocks	
Transportation	Qualified under National Safe Transit Committee Test Procedure 1A, Category II	

TABLE 3-9

5403-D40 Physical

Parameter	Information
Finish	Anodized aluminum panel with gray vinyl coated frame. Blue-vinyl coated cabinet
Net Weight of Cabinet Version with Feet and Handle	25 lbs (11 kg)
Overall Dimensions	See Fig. 3-1
Overall rack depth	19 inches

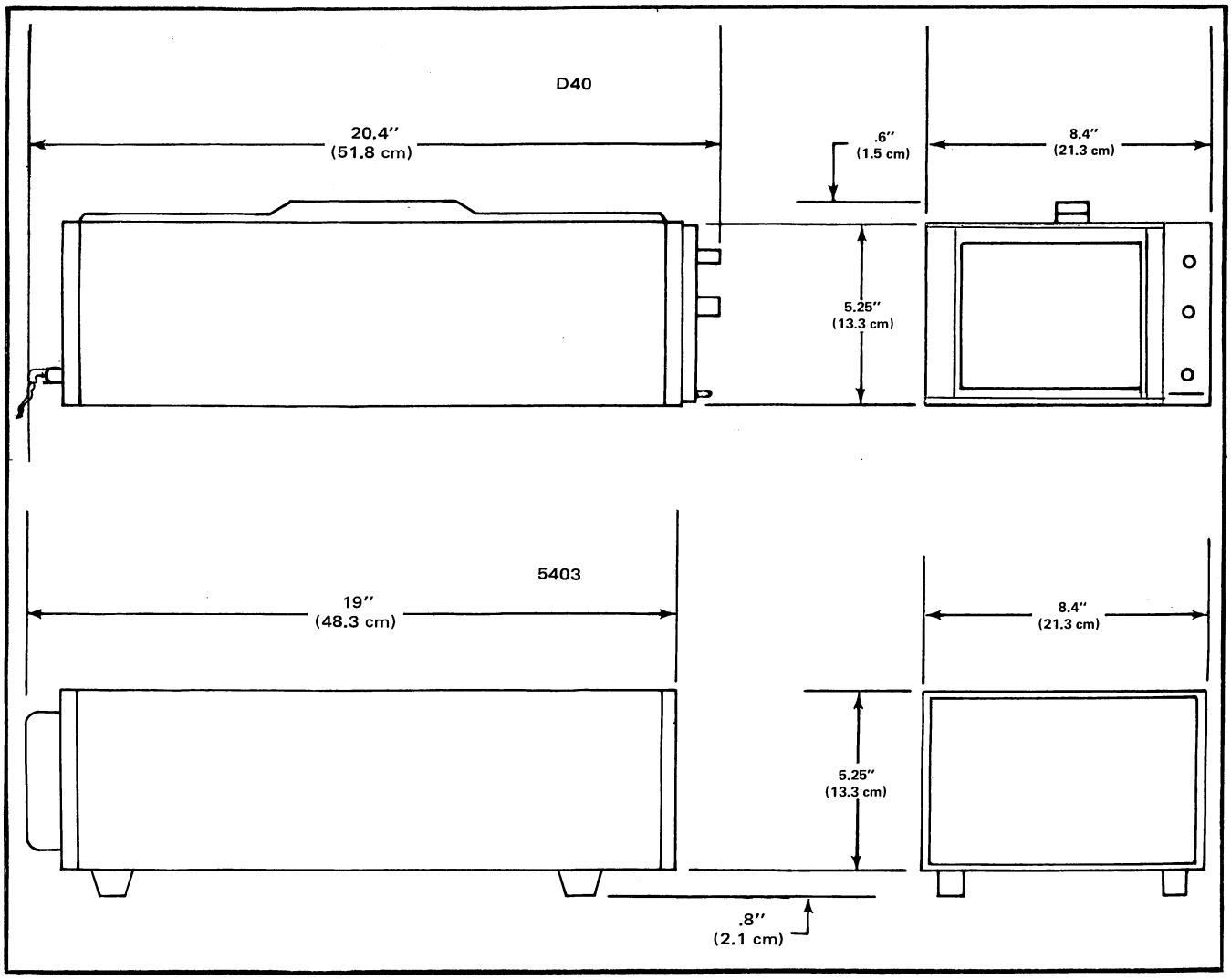

Fig. 3-1. Illustration showing dimensions of the cabinet version of the 5403 and D40.

DIAGRAMS, PARTS LISTS, AND ILLUSTRATIONS

Symbols and Reference Designators

Electrical components shown on the diagrams are in the following units unless noted otherwise:

Capacitors =	Values one or greater are in picofarads (pF). Values less than one are in microfarads (μF).
Resistors =	Ohms (Ω)

Symbols used on the diagrams are based on ANSI Y32.2 – 1970.

Logic symbology is based on MIL-STD-806B in terms of positive logic. Logic symbols depict the logic function performed and may differ from the manufacturer's data.

The following special symbols are used on the diagrams:

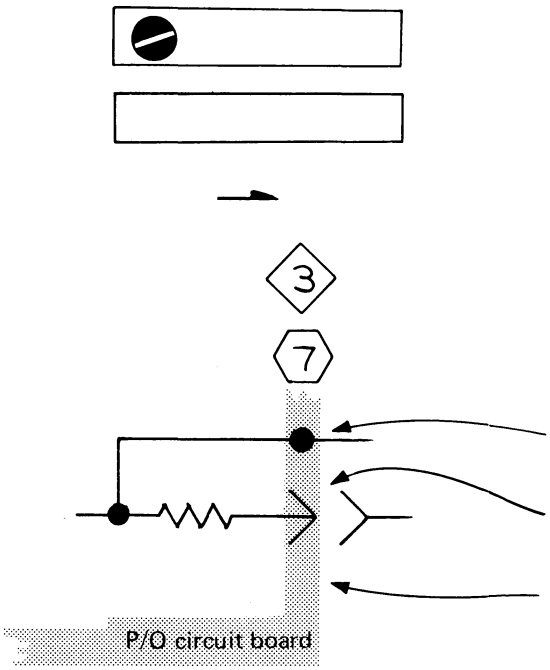

External Screwdriver adjustment.

External control or connector.

Clockwise control rotation in direction of arrow.

Refer to diagram number indicated in diamond.

Refer to waveform number indicated in hexagon.

Connection soldered to circuit board.

Connection made to circuit board with interconnecting pin.

Blue tint encloses components located on circuit board.

ELECTRICAL PARTS LIST

Replacement parts should be ordered from the Tektronix Field Office or Representative in your area. Changes to Tektronix products give you the benefit of improved circuits and components. Please include the instrument type number and serial number with each order for parts or service.

ABBREVIATIONS AND REFERENCE DESIGNATORS

A	Assembly, separable or repairable	FL	Filter	PTM	paper or plastic, tubular molded
AT	Attenuator, fixed or variable	H	Heat dissipating device (heat sink, etc.)	R	Resistor, fixed or variable
B	Motor	HR	Heater	RT	Thermistor
BT	Battery	J	Connector, stationary portion	S	Switch
C	Capacitor, fixed or variable	K	Relay	T	Transformer
Cer	Ceramic	L	Inductor, fixed or variable	TP	Test point
CR	Diode, signal or rectifier	LR	Inductor/resistor combination	U	Assembly, inseparable or non-repairable
CRT	cathode-ray tube	M	Meter	V	Electron tube
DL	Delay line	Q	Transistor or silicon-controlled rectifier	Var	Variable
DS	Indicating device (lamp)	P	Connector, movable portion	VR	Voltage regulator (zener diode, etc.)
Elect.	Electrolytic	PMC	Paper, metal cased	WW	wire-wound
EMC	electrolytic, metal cased	PT	paper, tubular	Y	Crystal
EMT	electrolytic, metal tubular				
F	Fuse				

Ckt. No.	Tektronix Part No.	Serial/Model No. Eff	Disc	Description
ASSEMBLIES				
A1	670-3078-00			VERTICAL Circuit Board Assembly
A2	670-2333-00	B010100	B019999	HORIZONTAL Circuit Board Assembly
A2	670-2333-01	B020000		HORIZONTAL Circuit Board Assembly
A3	670-2443-00			HV Circuit Board Assembly
A4	670-2442-00			FRONT PANEL CONTROL Circuit Board Assembly
A5	670-0702-04			GRATICULE LAMPS Circuit Board Assembly
CAPACITORS				
C100	281-0604-00			2.2 pF, Cer, ±0.25 pF, 500 V
C101	283-0003-00			0.01 uF, Cer, +80%-20%, 500 V
C102	283-0003-00			0.01 uF, Cer, +80%-20%, 500 V
C115	281-0204-00			2-22 pF, Var, 100 V, Plastic
C120	281-0638-00			240 pF, Cer, 5%, 500 V
C121	283-0032-00			470 pF, Cer, 5%, 500 V
C123	281-0524-00			150 pF, Cer, 20%, 500 V
C127	283-0003-00			0.01 uF, Cer, +80%-20%, 150 V
C148	281-0623-00			650 pF, Cer, 5%, 500 V
C153	281-0651-00			47 pF, Cer, 5%, 200 V
C155	281-0204-00			2-22 pF, Var, Plastic, 100 V
C156	281-0651-00			47 pF, Cer, 5%, 200 V
C160	281-0651-00			47 pF, Cer, 5%, 200 V
C165	281-0623-00			650 pF, Cer, 1%, 500 V
C167	281-0634-00			10 pF, Cer, 0.25pF, 500 V
C170	283-0000-00			0.001 uF, Cer, 100%-0%, 500 V
C180	290-0534-00			1 uF, Elect.,35 V, 20%
C181	281-0203-00			2-10 pF, Var, Plastic, 100 V
C184	281-0546-00			330 pF, Cer, 10%, 500 V
C185	281-0546-00			330 pF, Cer, 10%, 500 V
C188	283-0000-00			0.001 uF, Cer, +100%-0%, 500 V

©

Ckt. No.	Tektronix Part No.	Serial/Model No. Eff	Disc	Description
CAPACITORS (CONT)				
C192	290-0534-00	B010100	B010278	1 uF, Elect., 20%, 35 V
C192	290-0522-00	B010279		1 uF, Elect., 20%, 50 V
C197	290-0534-00			1 uF, Elect., 20%, 35 V
C198	290-0523-00			2.2 uF, Elect., 20%, 20 V
C210	281-0205-00			5.5-65 pF, Var, Plastic, 100 V
C211	281-0634-00	B010100	B019999	10 pF, (nominal value), selected
C211	281-0574-00	B020000		82 pF, Cer, 10%, 500 V
C235	281-0204-00	B010100	B019999	2-22 pF, Var, Plastic, 100 V
C235	281-0202-00	B020000		1.5-5.5 pF, Var, Plastic, 100 V
C240	283-0167-00			0.1 uF, Cer, 10%, 100 V
C242	281-0627-00	B010100	B019999	1 pF, Cer, 600 V
C242	281-0670-00	B020000		1.8 pF, Cer, ±0.1 pF, 500 V
C244	283-0003-00			0.01 uF, Cer, +80%-20%, 150 V
C250	283-0092-00	B010100	B019999	0.03 uF, Cer, +80%-20%, 200 V
C250	283-0003-00	B020000		0.01 uF, Cer, +80%-20%, 150 V
C252	283-0003-00			0.01 uF, Cer, +80%-20%, 150 V
C266	283-0003-00			0.01 uF, Cer, +80%-20%, 150 V
C272	281-0627-00	B010100	B019999	1 pF, Cer, 600 V
C272	281-0670-00	B020000		1.8 pF, Cer, ±0.1 pF, 500 V
C280	283-0110-00			0.005 uF, Cer, 150 V
C282	283-0003-00			0.01 uF, Cer, +80%-20%, 150 V
C286	283-0003-00			0.01 uF, Cer, +80%-20%, 150 V
C310	283-0000-00			0.001 uF, Cer, +100%-0%, 500 V
C335	283-0003-00			0.01 uF, Cer, +80%-20%, 150 V
C350	281-0627-00			1 pF, Cer, 600 V
C352	290-0523-00			2.2 uF, Elect., 20%, 20 V
C353	283-0002-00			0.01 uF, Cer, 500 V
C354	283-0110-00			0.005 uF, Cer, 150 V
C358	283-0003-00			0.01 uF, Cer, +80%-20%, 150 V
C360	283-0057-00			0.1 uF, Cer, +80%-20%, 200 V
C395	290-0410-00			15 uF, Elect., +50%-10%, 100 V
C402	283-0010-00	B010100	B010372	0.05 uF, Cer, 50 V
C402	283-0249-00	B010373		0.068 uF, Cer,10%, 50 V
C406	283-0081-00			0.1 uF, Cer, +80%-20%, 25 V
C410	290-0525-00			4.7 uF, Elect., 20%, 50 V
C412	283-0261-00			0.01 uF, Cer, 20%, 4000 V
C414	283-0261-00			0.01 uF, Cer, 20%, 4000 V
C415	283-0261-00			0.01 uF, Cer, 20%, 4000 V
C417	283-0021-00			0.001 uF, Cer, 20%, 5000 V
C418	283-0081-00			0.1 uF, Cer, +80%-20%, 25 V
C422	283-0261-00			0.01 uF, Cer, 20%, 4000 V
C425	283-0021-00			0.001 uF, Cer, 20%, 5000 V
C427	281-0512-00			27 pF, Cer, 10%, 500 V
C430	290-0159-00			2 uF, Elect., 150 V
C440	283-0021-00			0.001 uF, Cer, 20%, 5000 V

©

Ckt. No.	Tektronix Part No.	Serial/Model No. Eff	Disc	Description
DIODES, SILICON				
CR146	152-0422-00			VVC, 7 pF at 4 V
CR204	152-0574-00	XB020000		DO-35 pkk
CR206	152-0574-00	XB020000		DO-35 pkk
CR208	152-0141-02			1N4152
CR240	152-0141-02			1N4152
CR242	152-0574-00			DO-35 pkk
CR246	152-0574-00			DO-35 pkk
CR270	152-0141-02			1N4152
CR272	152-0574-00			DO-35 pkk
CR274	152-0574-00			DO-35 pkk
CR324	152-0061-00			CD8393 or FDH2161
CR352	152-0061-00			CD8393 or FDH2161
CR390	152-0141-02			1N4152
CR391	152-0141-02			1N4152
CR395	152-0141-02			1N4152
CR412	152-0409-00			VG-12X
CR420	152-0061-00			CD8393 or FDH2161
CR422	152-0061-00			CD8393 or FDH2161
CR428	152-0061-00			CD8393 or FDH2161
CR430	152-0061-00			CD8393 or FDH2161
DELAY LINE				
DL100	119-0392-00			Delay line assembly
BULBS				
DS310	150-0137-00			Incandescent, 8918, 14 V, 100 mA
DS312	150-0137-00			Incandescent, 8918, 14 V, 100 mA
DS314	150-0137-00			Incandescent, 8918, 14 V, 100 mA
FUSES				
F300	159-0041-00			Cartridge, 1.25A, 3AG, slo-blo
F410	159-0029-00			Cartridge, 0.3A, 3AG, med-blo
CONNECTOR				
J300	131-0955-00			Receptacle, electrical, BNC, female
INDUCTORS				
L167	108-0733-00			130 nH
L197	108-0440-00			8 uH
L198	108-0440-00			8 uH
L375	108-0644-00			Trace rotation
LR193	108-0328-00			0.3 uH
LR195	108-0328-00			0.3 uH
TRANSISTORS, SILICON				
Q100	151-0441-00			NPN, selected from 2N2857
Q106	151-0212-00			NPN, A485
Q125	151-0441-00			NPN, selected from 2N2857
Q130	151-0212-00			NPN, A485
Q140	151-0342-00			PNP, 2N4249
Q148	151-0271-00			PNP, SAB4113
Q165	151-0271-00			PNP, SAB4113

©

Ckt. No.	Tektronix Part No.	Serial/Model No. Eff	Disc	Description
TRANSISTORS, SILICON (CONT)				
Q170	151-0434-00			PNP, 2N4261
Q172	151-0434-00			PNP, 2N4261
Q180	151-0451-00			NPN, selected from 2N5943
Q182	151-0451-00			NPN, selected from 2N5943
Q188	151-0446-00			NPN, 2N3866
Q190	151-0446-00			NPN, 2N3866
Q200	151-0190-00			NPN, 2N3904
Q215	151-0190-00			NPN, 2N3904
Q240	151-0302-00	B010100	B019999	NPN, 2N2222A
Q240	151-0333-00	B020000		NPN, selected from MPS918
Q244	151-0407-00			NPN, 150 V, Tek Spec
Q250	151-0406-00			PNP, 150 V, Tek Spec
Q255	151-0262-00	XB020000		NPN, 2N5294
Q270	151-0301-00			PNP, 2N2907
Q274	151-0407-00			NPN, 150 V, Tek Spec
Q280	151-0406-00			PNP, 150 V, Tek Spec
Q310	151-0352-00			NPN, T0220AB, Tek Spec
Q320	151-0190-00			NPN, 2N3904
Q335	151-0190-00			NPN, 2N3904
Q340	151-0223-00			NPN, 2N4275
Q345	151-0188-00			PNP, 2N3906
Q352	151-0347-00			NPN, 2N5551
Q356	151-0350-00			PNP, 2N5401
Q390	151-0254-00			NPN, 2N5308
Q400	151-0342-00			PNP, 2N4249
Q410	151-0262-00			NPN, 2N5294
RESISTORS				
R100	321-0068-00			49.9 ohm, 1%, 0.125 W
R102	315-0221-00			220 ohm, 5%, 0.25 W
R103	321-0097-00			100 ohm, 1%, 0.125 W
R104	321-0097-00			100 ohm, 1%, 0.125 W
R108	315-0302-00			3K ohm, 5%, 0.25 W
R110	321-0217-00			1.78K ohm, 1%, 0.125 W
R111	321-0089-00			82.5 ohm, 1%, 0.125 W
R112	321-0217-00			1.78K ohm, 1%, 0.125 W
R115	311-1566-00			200 ohm, Var
R117	315-0101-00			100 ohm, 5%, 0.25 W
R118	315-0101-00			100 ohm, 5%, 0.25 W
R120	311-1560-00			5K ohm, Var
R121	311-1559-00			10K ohm, Var
R123	311-1563-00			1K ohm, Var
R125	321-0068-00			49.9 ohm, 1%, 0.125 W
R127	315-0221-00			220 ohm, 5%, 0.25 W
R128	321-0097-00			100 ohm, 1%, 0.125 W
R129	321-0097-00			100 ohm, 1%, 0.125 W
R132	315-0302-00			3K ohm, 5%, 0.25 W
R135	311-1563-00			1K ohm, Var
R136	321-0121-00			178 ohm, 1%, 0.125 W

©

Ckt. No.	Tektronix Part No.	Serial/Model No. Eff	Disc	Description
RESISTORS (CONT)				
R138	315-0472-00			4.7K ohm, 5%, 0.25 W
R139	315-0102-00			1K ohm, 5%, 0.25 W
R141	315-0102-00	B010100	B010250	1K ohm, 5%, 0.25 W
R141	315-0152-00	B010251		1.5K ohm, 5%, 0.25 W
R142	315-0270-00			27 ohm, 5%, 0.25 W
R143	315-0510-00			51 ohm, 5%, 0.25 W
R144	315-0431-00			430 ohm, 5%, 0.25 W
R145	321-0148-00			340 ohm, 1%, 0.125 W
R146	315-0100-00			10 ohm, 5%, 0.25 W
R148	315-0151-00			150 ohm, 5%, 0.25 W
R149	315-0100-00			10 ohm, 5%, 0.25 W
R151	315-0471-00			470 ohm, 5%, 0.25 W
R153	321-0093-00			90.9 ohm, 1%, 0.125 W
R155	311-1567-00			100 ohm, Var
R157	315-0622-00			6.2K ohm, 5%, 0.25 W
RT157	307-0181-00			100K ohm, Thermal, 10%
R158	315-0102-00			1K ohm, 5%, 0.25 W
R160	321-0148-00			340 ohm, 1%, 0.125 W
R163	315-0431-00			430 ohm, 5%, 0.25 W
R164	315-0510-00			51 ohm, 5%, 0.25 W
R165	315-0151-00			150 ohm, 5%, 0.25 W
R167	311-1564-00			500 ohm, Var
R172	321-0126-00			200 ohm, 1%, 0.125 W
R173	321-0093-00			90.9 ohm, 1%, 0.125 W
R175	311-1561-00			2.5K ohm, Var
R176	321-0093-00			90.9 ohm, 1%, 0.125 W
R178	321-0126-00			200 ohm, 1%, 0.125 W
R180	301-0151-00	B010100	B020396	150 ohm, 5%,0.5 W
R180	315-0910-00	B020397		91 ohm, 5%, 0.25 W
R181	321-0059-00	B010100	B020396	40.2 ohm, 1%, 0.125 W
R181	321-0063-00	B020397		44.2 ohm, 1%, 0.125 W
R182	301-0151-00	B010100	B020396	150 ohm, 5%, 0.5 W
R182	315-0910-00	B020397		91 ohm, 5%, 0.25 W
R183	301-0300-00	XB020397		30 ohm, 5%, 0.50 W
R184	315-0680-00			68 ohm, 5%, 0.25 W
R185	315-0680-00			68 ohm, 5%, 0.25 W
R187	315-0820-00			82 ohm, 5%, 0.25 W
R188	315-0100-00			10 ohm, 5%, 0.25 W
R190	315-0820-00			82 ohm, 5%, 0.25 W
R191	307-0435-00			510 ohm, 5%, 4 W
R192	315-0100-00			10 ohm, 5%, 0.25 W
R193	315-0102-00			1K ohm, 5%, 0.25 W
R194	307-0435-00			510 ohm, 5%, 4 W
R195	315-0102-00			1K ohm, 5%, 0.25 W
R197	315-0100-00			10 ohm, 5%, 0.25 W
R198	315-0100-00			10 ohm, 5%, 0.25 W
R200	321-0069-00	B010100	B019999	51.1 ohm, 1%, 0.125 W
R200	321-0065-00	B020000		46.4 ohm, 1%, 0.125 W
R201	317-0047-00	XB020000		4.7 ohm, 5%, 0.125 W

©

Ckt. No.	Tektronix Part No.	Serial/Model No. Eff	Disc	Description
RESISTORS (CONT)				
R202	315-0151-00			150 ohm, 5%, 0.25 W
R203	321-0200-00			1.18K ohm, 1%, 0.125 W
R205	322-0205-00			1.33K ohm, 1%, 0.25 W
R207	321-0193-00			1K ohm, 1%, 0.125 W
R208	315-0361-00			360 ohm, 5%, 0.25 W
R210	321-0158-00			432 ohm, 1%, 0.125 W
R211	321-0093-00	B010100	B019999	90.9 ohm, 1%, 0.125 W
R211	321-0076-00	B020000		60.4 ohm, 1%, 0.125 W
R212	311-1564-00			500 ohm, Var
R213	322-0205-00			1.33K ohm, 1%, 0.25 W
R215	321-0069-00	B010100	B019999	51.1 ohm, 1%, 0.125 W
R215	321-0065-00	B020000		46.4 ohm, 1%, 0.125 W
R216	317-0047-00	XB020000		4.7 ohm, 5%, 0.125 W
R217	315-0151-00			150 ohm, 5%, 0.25 W
R218	321-0200-00			1.18K ohm, 1%, 0.125 W
R220	315-0103-00			10K ohm, 5%, 0.25 W
R222	311-1558-00			20K ohm, Var
R224	315-0103-00			10K ohm, 5%, 0.25 W
R238	321-0193-00			1K ohm, 1%, 0.125 W
R240	315-0241-00			240 ohm, 5%, 0.25 W
R242	323-0318-00			20K ohm, 1%, 0.5 W
R243	315-0332-00	B010100	B019999X	3.3K ohm, 5%, 0.25 W
R244	315-0621-00			620 ohm, 5%, 0.25 W
R245	315-0221-00			220 ohm, 5%, 0.25 W
R246	315-0121-00			120 ohm, 5%, 0.25 W
R247	315-0471-00			470 ohm, 5%, 0.25 W
R248	315-0104-00	XB020000		100K ohm, 5%, 0.25 W
R250	301-0393-00			39K ohm, 5%, 0.25 W
R252	316-0101-00			100 ohm, 10%, 0.25 W
R256	315-0821-00			820 ohm, 5%, 0.25 W
R257	305-0622-00	B010100	B019999	6.2K ohm, 5%, 2 W
R257	304-0392-00	B020000		3.9K ohm, 10%, 1 W
R258	315-0753-00	XB020000		75K ohm, 5%, 0.25 W
R259	316-0100-00			10 ohm, 10%, 0.25 W
R265	321-0268-00			6.04K ohm, 1%, 0.125 W
R266	321-0389-00			110K ohm, 1%, 0.125 W
R268z	321-0193-00			1K ohm, 1%, 0.125 W
R270	315-0471-00			470 ohm, 5%, 0.25 W
R272	323-0318-00			20K ohm, 1%, 0.5 W
R274	315-0102-00			1K ohm, 5%, 0.25 W
R275	315-0332-00	B010100	B019999X	3.3K ohm, 5%, 0.25 W
R276	315-0102-00			1K ohm, 5%, 0.25 W
R280	315-0152-00			1.5K ohm, 5%, 0.25 W
R282	316-0101-00			100 ohm, 10%, 0.25 W
R284	301-0393-00			39K ohm, 5%, 0.5 W
R286	315-0821-00			820 ohm, 5%, 0.25 W
R289	316-0100-00			10 ohm, 10%, 0.25 W
R320	315-0103-00			10K ohm, 5%, 0.25 W
R322	315-0203-00			20K ohm, 5%, 0.25 W

©

Ckt. No.	Tektronix Part No.	Serial/Model No. Eff	Disc	Description
RESISTORS (CONT)				
R324	315-0332-00			3.3K ohm, 5%, 0.25 W
R326	315-0202-00			2K ohm, 5%, 0.25 W
R327	315-0822-00			8.2K ohm, 5%, 0.25 W
R328	315-0392-00			3.9K ohm, 5%, 0.25 W
R330	315-0103-00			10K ohm, 5%, 0.25 W
R332	311-1428-00			20K ohm, Var
R334	315-0224-00			220K ohm, 5%, 0.25 W
R335	315-0103-00			10K ohm, 5%, 0.25 W
R336	315-0224-00			220K ohm, 5%, 0.25 W
R338	315-0474-00			470K ohm, 5%, 0.25 W
R342	315-0510-00			51 ohm, 5%, 0.25 W
R343	315-0241-00			240 ohm, 5%, 0.25 W
R345	315-0470-00			47 ohm, 5%, 0.25 W
R347	315-0222-00			2.2K ohm, 5%, 0.25 W
R349	321-0311-00			16.9K ohm, 1%, 0.125 W
R350	321-0311-00			16.9K ohm, 1%, 0.125 W
R352	315-0221-00			220 ohm, 5%, 0.25 W
R356	315-0102-00			1K ohm, 5%, 0.25 W
R358	315-0104-00			100K ohm, 5%, 0.25 W
R359	315-0392-00			3.9K ohm, 5%, 0.25 W
R360	315-0471-00			470 ohm, 5%, 0.25 W
R362	303-0153-00	B010100	B010372	15K ohm, 5%, 1 W
R362	305-0153-00	B010373		15K ohm, 5%, 2 W
R365	311-1555-00			100K ohm, Var
R368	315-0473-00			47K ohm, 5%, 0.25 W
R370	311-1555-00			100K ohm, Var
R375	311-1559-00	B010100	B020892	10K ohm, Var
R375	311-1558-00	B020893		20K ohm, Var
R390	316-0102-00			1K ohm, 10%, 0.25 W
R392	316-0154-00			150K ohm, 10%, 0.25 W
R394	316-0472-00			4.7K ohm, 10%, 0.25 W
R395A,B, R395C,D	307-0290-06			250K ohm, Thick film
R397	316-0474-00			470K ohm, 10%, 0.25 W
R400	316-0101-00			100 ohm, 10%, 0.25 W
R402	316-0182-00	B010100	B010372	1.8K ohm, 10%, 0.25 W
R402	316-0102-00	B010373		1K ohm, 10%, 0.25 W
R404	315-0270-00	XB010373		27 ohm, 5%, 0.25 W
R405	316-0273-00			27K ohm, 10%, 0.25 W
R406	316-0391-00			390 ohm, 10%, 0.25 W
R408	316-0100-00			10 ohm, 10%, 0.25 W
R410	307-0053-00			3.3 ohm, 5%, 0.5 W
R412	316-0223-00			22K ohm, 10%, 0.25 W
R415	316-0470-00			47 ohm, 10%, 0.25 W
R417	316-0104-00			100K ohm, 10%, 0.25 W
R418	316-0104-00			100K ohm, 10%, 0.25 W
R420	316-0103-00			10K ohm, 10%, 0.25 W
R422	316-0106-00			10M ohm, 10%, 0.25 W
R425	316-0102-00			1K ohm, 10%, 0.25 W

©

Ckt. No.	Tektronix Part No.	Serial/Model No. Eff	Disc	Description
RESISTORS (CONT)				
R427	316-0105-00			1M ohm, 10%, 0.25 W
R428	316-0102-00			1K ohm, 10%, 0.25 W
R430	316-0473-00			47K ohm, 10%, 0.25 W
R433	316-0393-00			39K ohm, 10%, 0.25 W
R435	311-1206-00			250K ohm, Var
R440	311-1312-00			5M ohm, Var
R1000A,B[1]	311-1492-00			5K ohm x 5K ohm, Var
SWITCHES				
S300	260-0618-00			Thermostatic, open 60 deg. C, close 48.9 deg. C
S302	260-1222-00			Push-Pull, POWER
S335 S1000[1]	260-1238-00			Push, BEAM FINDER
TRANSFORMER				
T410	120-0822-00			HV Power
HV MULTIPLIER				
U410	152-0495-01			Silicon, HV multiplier
ELECTRON TUBE				
V400	154-0701-00			CRT
DIODES, ZENER				
VR175	152-0195-00			1N751A, 0.4 W, 5%, 5.1 V
VR240	152-0255-00	B010100	B019999X	1N978B, 0.4 W, 5%, 5.1 V
VR242	152-0255-00	B010100	B019999X	1N978B, 0.4 W, 5%, 5.1 V
VR245	152-0427-00	XB020000		1N985B, 0.4 W, 5%, 100 V
VR252	152-0427-00	XB020000		1N985B, 0.4 W, 5%, 100 V
VR270	152-0255-00	B010100	B019999X	1N978B, 0.4 W, 5%, 5.1 V
VR272	152-0255-00	B010100	B019999X	1N978B, 0.4 W, 5%, 5.1 V
VR365	152-0285-00			1N980B, 0.4 W, 5%, 62 V
VR435	152-0427-00			1N985B, 0.4 W, 5%, 100 V

[1]Furnished as a unit.

©

CONTROLS AND CONNECTORS

INTENSITY Control

Controls display brightness.

FOCUS Control

Provides adjustment to obtain a well-defined display.

BEAM FINDER Pushbutton

Brings beam on-screen; limits display to area inside graticule and intensifies beam.

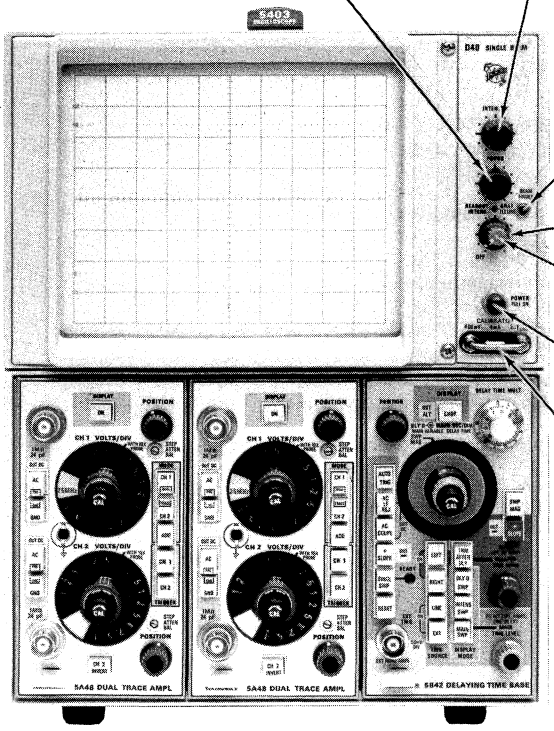

READOUT INTENS Control

Controls brightness of the readout portion of the CRT display. In the fully counterclockwise position, the readout system is inoperative.

GRAT ILLUM Control

Controls Graticule illumination.

POWER Switch

Turns instrument power on or off.

CALIBRATOR Loop

Provides positive-going accurate 400-millivolt and 4-milliampere squarewave at a frequency of twice the line frequency for calibration and probe compensation.

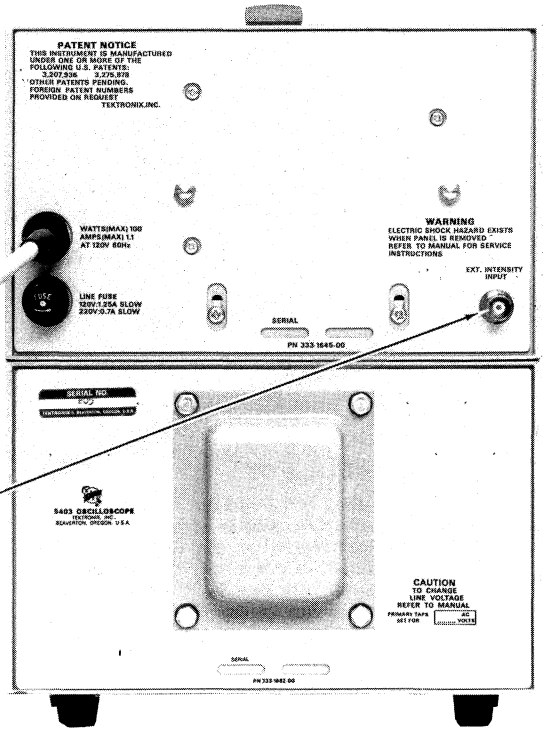

EXT INTENSITY INPUT Connector

Permits application of Z-axis signals to the CRT (DC coupled). Positive-going signal increases intensity.

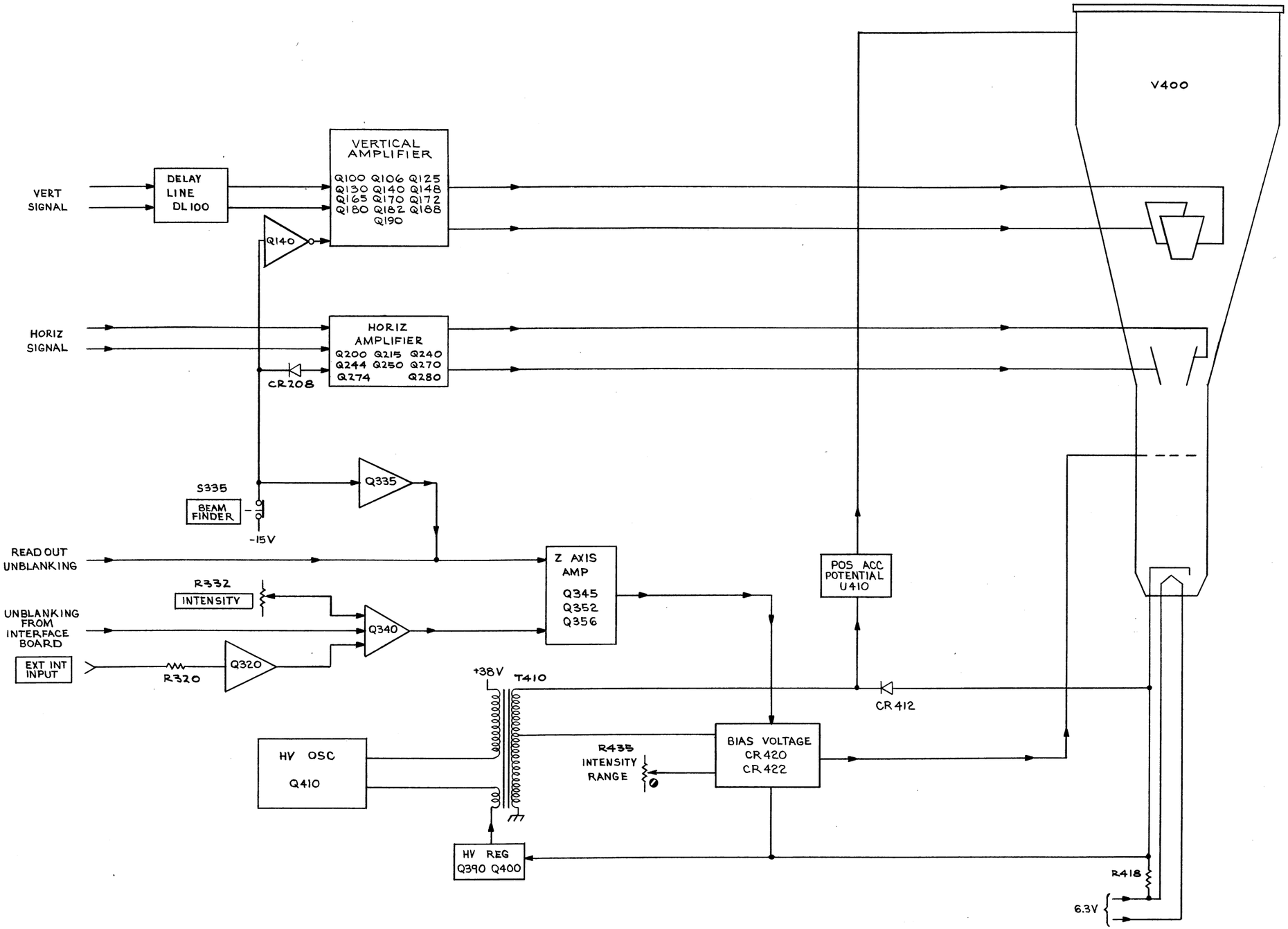

B

BLOCK DIAGRAM

CJH
573

PARTS LOCATION GRID

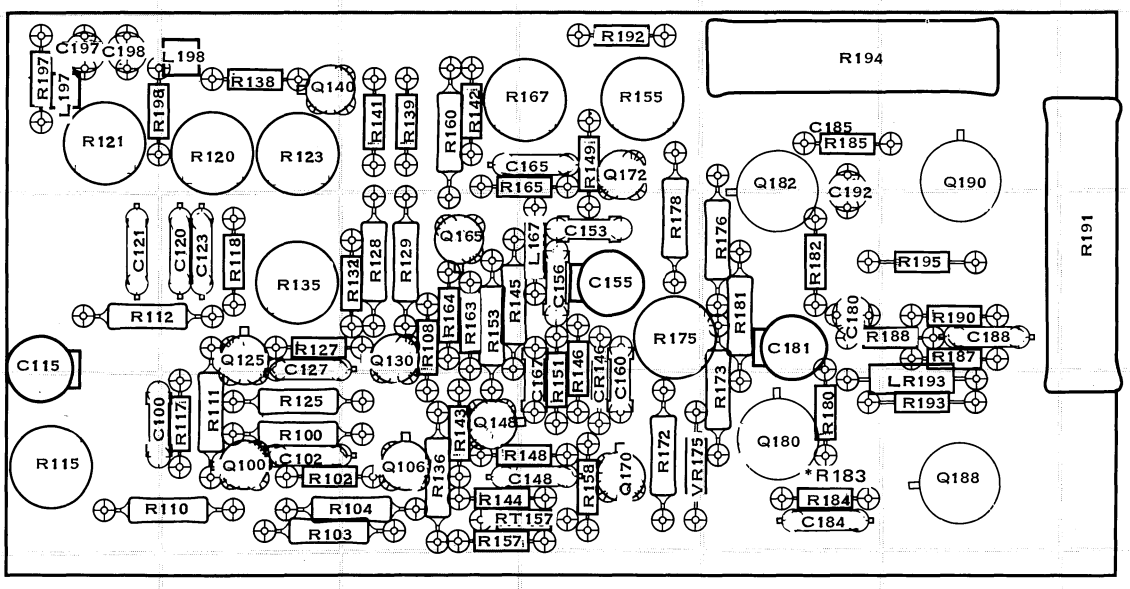

*See Parts List for serial number ranges.

CKT NO	GRID LOC	CKT NO	GRID LOC	CKT NO	GRID LOC	CKT NO	GRID LOC	CKT NO	GRID LOC	CKT NO	GRID LOC	CKT NO	GRID LOC	CKT NO	GRID LOC
C100	B-4	C184	E-4	CR146	D-4	Q100	B-4	R100	B-4	R129	C-3	R155	D-2	R187	F-3
C102	B-4	C185	E-2			Q106	C-4	R102	B-4	R132	C-3	R157	C-4	R188	F-3
C115	A-3	C188	F-3			Q125	B-3	R103	B-4	R135	B-3	R158	D-4	R190	F-3
C120	B-3	C192	E-3			Q130	C-3	R104	B-4	R136	C-4	R160	C-2	R191	G-3
C121	A-3	C197	A-2	L167	D-3	Q140	B-2	R108	C-3	R137	E-4	R163	C-3	R192	D-2
C123	B-3	C198	A-2	L197	A-2	Q148	C-4	R110	B-4	R138	B-2	R164	C-3	R193	F-4
C127	B-4			L198	B-2	Q165	C-3	R111	B-4	R139	C-2	R165	D-2	R194	E-2
C148	D-4					Q170	D-4	R112	A-3	R141	C-2	R167	D-2	R195	F-3
C153	D-3			LR193	F-4	Q172	D-2	R115	A-4	R142	C-2	R172	D-4	R197	A-2
C155	D-3					Q180	E-4	R117	B-4	R143	C-4	R175	D-3	R198	B-2
C156	D-3					Q182	E-3	R118	B-3	R144	C-4	R176	E-3		
C160	D-4					Q188	F-4	R120	B-2	R145	D-3	R178	D-3	RT157	D-4
C165	D-2					Q190	F-2	R121	A-2	R146	D-4	R180	E-4		
C167	D-4							R123	B-2	R148	D-4	R181	E-3	VR175	E-4
C180	E-3							R125	B-4	R149	D-2	R182	E-3		
C181	E-3							R127	B-3	R151	D-4	R183	E-4		
								R128	C-3	R153	C-3	R184	E-4		
												R185	E-2		

©

ADJUSTMENTS
VERTICAL AMPLIFIER

Equipment Required

1. Time-base plug-in unit with a triggered sweep rate of at least 0.1 μs. For example, a Tektronix 5B42 Delaying Time Base or any time base that is compatible with the Tektronix 5403-D40 Oscilloscope.

2. Special Tektronix Calibration Fixture 067-0680-00.

3. Sinewave generator with output frequencies of 3 MHz and 100 MHz.

Preliminary Procedure

NOTE

The performance of this instrument can be checked at any temperature within the 0°C to +50°C range. Make any adjustments at a temperature of +25°C, ±5°C.

a. Remove the cabinet panels covering the D40.

b. Install the 067-0680-00 Calibration Fixture in the left plug-in compartment and a time-base plug-in in the right plug-in compartment.

c. Check that the correct nominal line-selector block has been installed on the line-selector pins and that the regulating range selected includes the input line voltage, see Installation section for complete instructions.

d. Connect the 5403-D40 to the line voltage source and pull the POWER switch out to turn the instrument on.

3. Vertical Compensation Flat Top, R121, R120, R123

Set the test switch of the 067-0680-00 Calibration Fixture to vert or horiz + step resp and depress the 100 kHz rep rate switch. Center the squarewave signal then increase its amplitude to 6 major divisions with the amplitude control of the 067-0680-00.

Set the time-base plug-in main sec/div switch to 2 μs sweep rate. Adjust R121 for optimum level top of squarewave. Change the sweep rate of the time-base plug-in to 1 μs and adjust the R120 for a flat waveform top. Change the sec/div switch of the time-base plug-in to 0.5 μs sweep rate and adjust R123 for optimum level top of the signal. Repeat as necessary to obtain optimum flat top on the waveform.

Square Front Corner, C115, R115, C155, R155, R167 and C181

Depress the 1 MHz rep rate switch on the 067-0680-00 Calibration Fixture. Set the main sec/div switch of the time-base plug-in to 0.1 μs, and adjust the main trig level for a stable step function display.

Adjust the C115, R115, C155, R155, R167, and C181 for a square front corner. There is direct interaction between C115 and R115 and between C155 and R155. Best results are usually obtained by setting R115 fully cw, then adjusting C115.

Adjust R155 and R167 for minimum ringing of front corner. Adjust C155 and C115 for a level front corner. After other front corner adjustments have been made, adjust C181 for optimum risetime and minimum front corner spike.

The waveform should have a square leading corner and flat top within ±3%. Position the waveform with 3 major divisions of the waveform off the graticule area, to the top and bottom of the graticule and check for no more than ±3% of waveform aberrations.

Change the Calibration Fixture test switch to vert or horiz — step resp. Check negative waveform for no more than ±3% of waveform aberrations anywhere within the extremes of the graticule.

Install Calibration Fixture into right plug-in compartment and repeat checks.

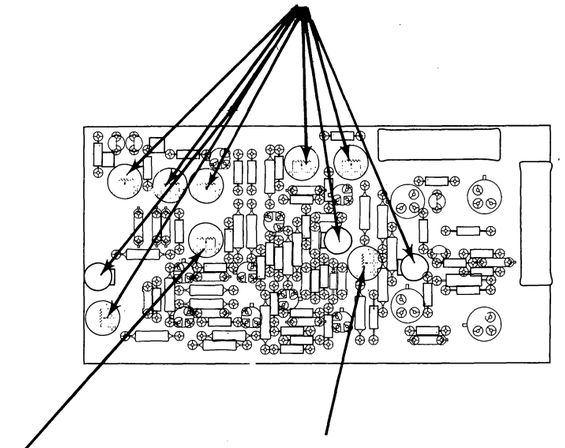

1. Vertical Centering, R135

Install the 067-0680-00 Calibration Fixture in left plug-in compartment. Set the 067-0680-00 test switch to com mode. Adjust R135 to center the trace vertically on the graticule.

Remove the Calibration Fixture from the left plug-in compartment and install it into the center plug-in compartment. Trace position should be within 0.5 major divisions of vertical graticule center.

2. Vertical Gain, R175

Move the 067-0680-00 from the center to the left plug-in compartment. Set the test switch of the Calibration Fixture to vert or horiz gain and depress the 1 kHz rep rate switch. Position the bright trace to the center graticule with the position control of the 067-0680-00.

Adjust the R175 so that the horizontal traces coincide with the horizontal graticule lines, one trace per division. Place the first and last trace of the center seven traces exactly on their respective graticule lines.

4. Check Vertical Bandwidth

Set the 067-0680-00 test switch to vert or horiz freq resp. Connect a 3 MHz sinewave from a 50 Ω source to the 067-0680-00 aux in cw in (freq resp) connector. Adjust the output amplitude of the sinewave generator to obtain a vertical CRT display of six major graticule divisions.[1] (Green light must go on.)

Change the sinewave frequency to 90 MHz. Check that the vertical CRT display is still at least 4.2 major graticule divisions.

[1] Refer to the 067-0680-00 Calibration Fixture manual for how to get a leveled sinewave output.

HORIZONTAL AMPLIFIER
PARTS LOCATION GRID

SN B020000-up

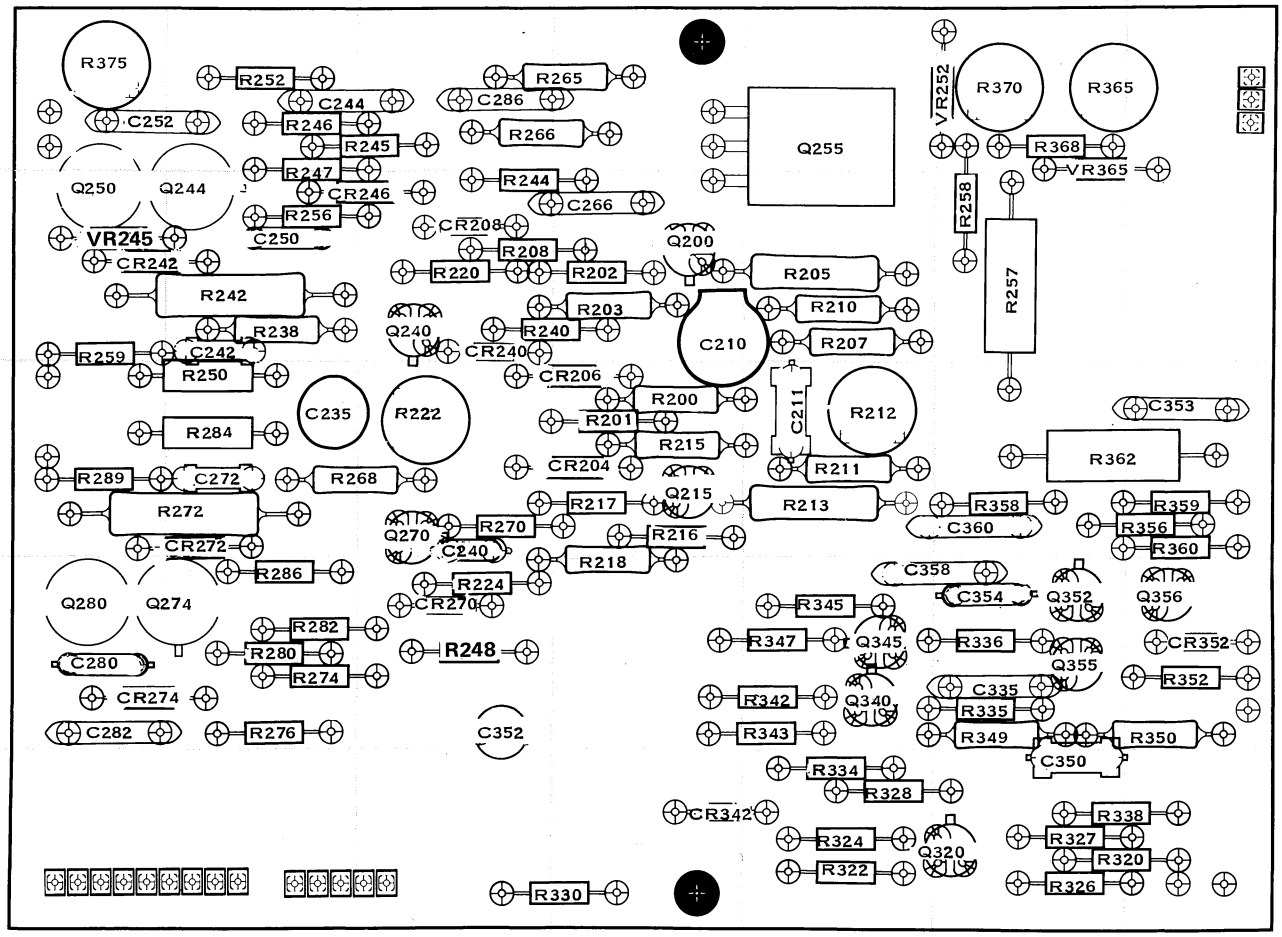

PARTS LOCATION GRID
ADJUSTMENTS HORIZ-
ONTAL AMP.

CKT NO	GRID LOC	CKT NO	GRID LOC	CKT NO	GRID LOC	CKT NO	GRID LOC	CKT NO	GRID LOC	CKT NO	GRID LOC	CKT NO	GRID LOC	CKT NO	GRID LOC
C210	E2	C353	G3	CR204	D3	Q200	D2	R200	D3	R242	B2	R289	A3	R352	G4
C211	E3	C358	E4	CR206	D3	Q215	D3	R201	D3	R248	C4	R320	F5	R356	G3
C235	B3	C360	F3	CR208	C2	Q240	C2	R202	D2	R250	B3	R322	E5	R358	F3
C240	C3			CR240	C2	Q244	B2	R203	D2	R252	B1	R324	E5	R359	G3
C242	B2			CR242	A2	Q250	A2	R205	E2	R256	B2	R326	F5	R360	G3
C244	B1			CR246	C2	Q255	E1	R207	E2	R257	F2	R327	F5	R362	F3
C250	B2			CR270	A4	Q270	C3	R208	C2	R258	F2	R328	E5	R365	F1
C252	A1			CR272	B3	Q274	B4	R210	E2	R259	A2	R330	D5	R368	F1
C266	D2			CR274	B4	Q280	A4	R211	E3	R265	C1	R334	E5	R370	F1
C272	B3			CR342	D5	Q320	E5	R212	E3	R266	C1	R335	F4	R375	A1
				CR352	G4	Q335	F4	R213	E3	R268	C3	R336	F4		
C280	A4					Q340	E4	R215	D3	R270	C3	R338	F5		
C282	A4					Q345	E4	R216	D3	R272	B3	R342	E4		
C286	C1					Q352	F4	R217	D3	R274	B4	R343	E4	VR245	A2
C335	F4					Q356	G4	R218	D4	R276	B4	R345	E4	VR252	F1
C350	F5							R220	C2	R280	B4	R347	E4	VR365	F1
C352	C4							R222	C3	R282	B4	R349	F4		
C354	F4							R224	C4	R284	B3	R350	G4		
								R238	B2	R286	B4				
								R240	C2						

Ⓐ

REV. FEB 1974

ADJUSTMENTS

HORIZONTAL AMPLIFIER

Equipment Required

1. Vertical plug-in unit.

2. Time-base plug-in unit.

3. Special Tektronix calibration fixture 067-0680-00.

4. Time-marker generator having 10 ns and 1 ms markers.

5. Sinewave generator with output frequencies of 50 kHz and 2 MHz.

Preliminary Procedure

NOTE

The performance of this instrument can be checked at any temperature within the 0°C to +50°C range. Make any adjustments at a temperature of +25°C, ±5°C.

a. Remove the cabinet panels covering the D40.

b. Install a vertical plug-in in the left plug-in compartment and a time-base plug-in in the right plug-in compartment.

c. Check that the correct nominal line-selector block has been installed on the line-selector pins and that the regulating range selected includes the input line voltage, see Installation section for complete instructions.

d. Connect the 5403-D40 to the line voltage source and pull the POWER switch out to turn the instrument on.

1. Astig, R370

Set the time-base main sec/div switch to amp. Turn the FOCUS control fully clockwise, then adjust R370 for a nearly round spot on the CRT. Adjust the FOCUS control for smallest spot.

3. Horizontal Centering, R222

Remove the vertical plug-in from the left plug-in compartment and install the time-base plug-in in its place. Install the 067-0680-00 calibration fixture in the right plug-in compartment.

Set the 067-0680-00 test switch to com mode. Adjust R222 to center the trace horizontally on the graticule.

2. Trace Rotation, R375

Set the time-base controls for a 1 ms/div sweep with auto triggering. Adjust R375 to make the trace parallel to the horizontal graticule lines.

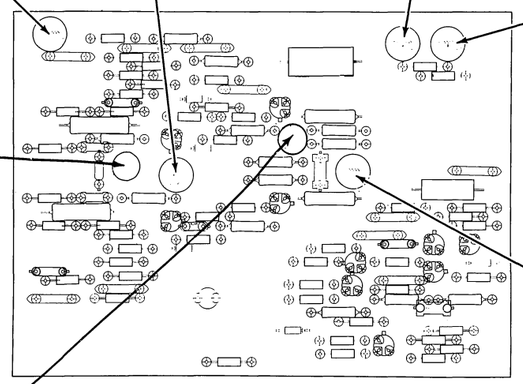

4. Geom, R365

Set the 067-0680-00 (located in the right plug-in compartment) test switch to vert or horiz gain and depress the 1 MHz rep rate switch. Position bright vertical trace to center graticule line. Adjust R365 for minimum bow or tilt of vertical trace, using graticule as reference. Check that the bowing or tilting does not exceed one-half minor graticule division. The adjustment of R365 may have to be a compromise to bring all points within the tolerance.

7. 10 ns Timing, C210

Interchange the 067-0680-00 and time-base plug-ins (a 5B42 plug-in or a time-base plug-in having a 10 ns sweep must be used), i.e., 067-0680-00 in left plug-in compartment and time-base in right plug-in compartment. Set 067-0680-00 test switch to aux in. Connect 10 ns markers from the time-marker generator to the 067-0680-00 aux in cw in (freq resp) connector using a coaxial cable. Adjust the 067-0680-00 amplitude control for a marker height of about five major divisions.

Set the time-base main sec/div switch to .1 μ and push the mag pushbutton in. Adjust the time-base triggering controls for a stable display.

Adjust C210 for one 10 ns marker per division over the center eight major graticule divisions. Check linearity (±6 1/2%) of entire sweep, excluding the first three and the last ten major divisions.

5. Horiz Gain, R212

Adjust R212 for exactly eight major graticule divisions between the second and eighth vertical traces. Check for a display of one vertical line per major graticule division within one-quarter minor division.

8. 5 ns Timing, C235

Do not make this adjustment unless a time-base plug-in having a 5 ns sweep is available. Connect 5 ns markers from the time-marker generator to the 067-0680-00 aux in cw in (freq resp) connector using a coaxial cable. Adjust the 067-0680-00 amplitude control for a marker height of about five major divisions.

Set the time-base main sec/div switch to .05 μ and push the mag pushbutton in. Adjust the time-base triggering controls for a stable display.

Adjust C235 for one 5 ns marker per division over the center eight major graticule divisions. Check linearity (±6 1/2%) of entire sweep, excluding the first three and the last ten major divisions.

C235 and C210 interact with each other. It therefore may be necessary to recheck step 7 and this step.

6. Check Horizontal Bandwidth

Set the 067-0680-00 test switch to aux in. Connect a correctly terminated 50 kHz sinewave to the 067-0680-00 aux in cw in (freq resp) connector. Adjust the output amplitude of the sinewave generator to obtain a horizontal CRT display of six major graticule divisions.

Change the input sinewave frequency to the 067-0680-00 to 2 MHz. Check that the horizontal CRT display is still at least 4.2 major graticule divisions.

[1] Refer to the 067-0680-00 Calibration Fixture manual for how to get a leveled sinewave output.

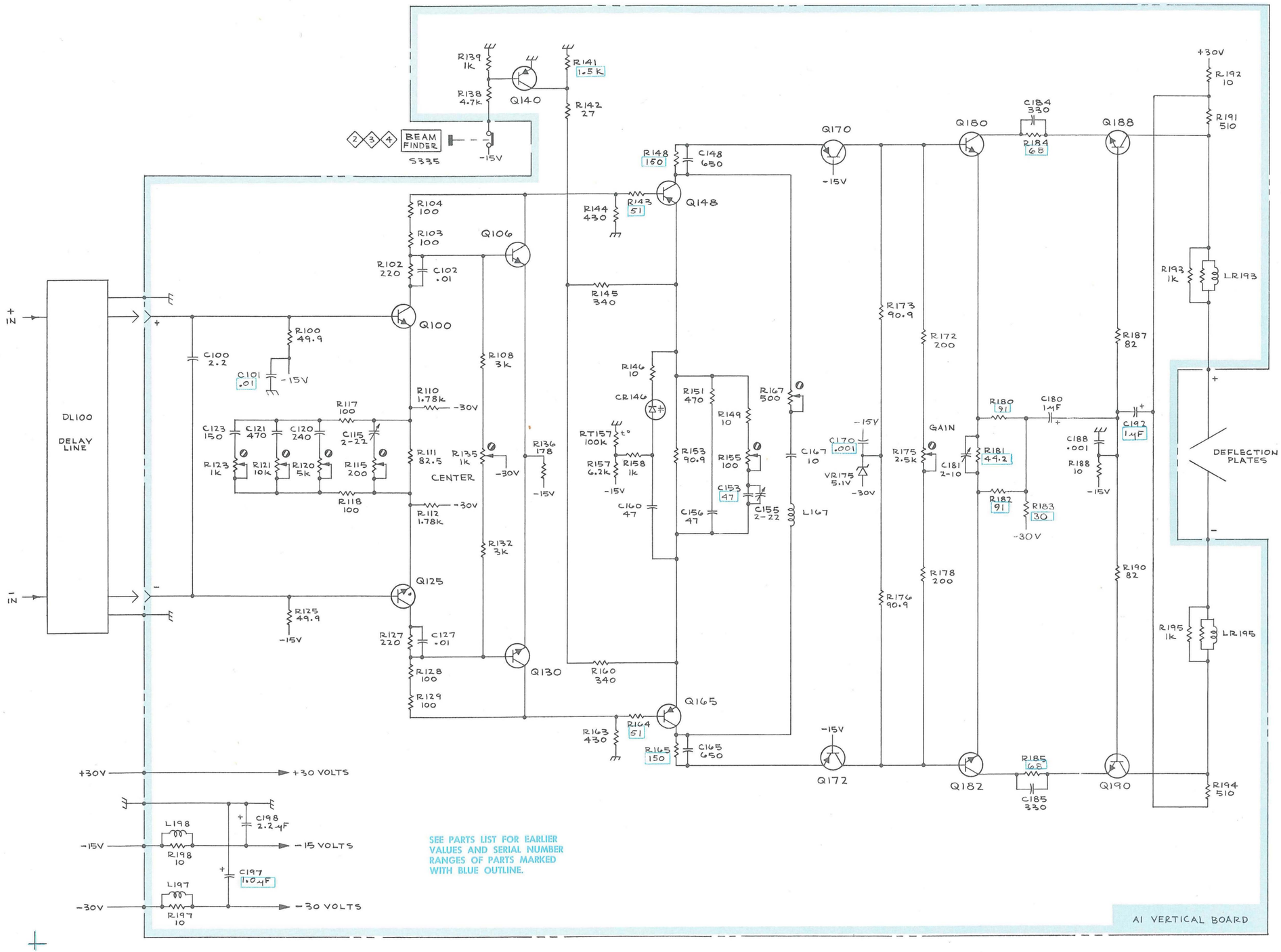
DL100
DELAY LINE
+ IN
- IN
R139 1k
R138 4.7k
Q140
R141 1.5K
R142 27
2 3 4
BEAM FINDER
5335
-15V
R148 150
C148 650
Q148
R144 430
R143 51
Q170
-15V
Q180
C184 330
R184 68
Q188
+30V
R192 10
R191 510
R104 100
R103 100
Q106
R102 220
C102 .01
R145 340
R193 1k
LR193
Q100
R100 49.9
C101 .01
-15V
C100 2.2
R108 3k
R110 1.78k
-30V
R117 100
C123 150
C121 470
C120 240
C115 2-22
R123 1k
R121 10k
R120 5k
R115 200
R111 82.5
R135 1k
CENTER
-30V
R136 178
-15V
R118 100
R112 1.78k
-30V
R132 3k
Q125
R125 49.9
-15V
R127 220
C127 .01
R128 100
R129 100
Q130
R160 340
R146 10
CR146
RT157 100K t°
R157 6.2k
-15V
R158 1k
C160 47
R151 470
R153 90.9
C156 47
R149 10
R155 100
C153 47
C155 2-22
L167
R167 500
C167 10
R173 90.9
R172 200
R176 90.9
R178 200
-15V
C170 .001
VR175 5.1V
-30V
GAIN
R175 2.5k
C181 2-10
R180 91
C180 1μF
R181 49.2
R182 91
R183 30
-30V
C188 .001
R188 10
-15V
R187 82
C192 1μF
R190 82
DEFLECTION PLATES
+
-
R193 1k
LR193
R195 1k
LR195
R194 510
R163 430
R164 51
Q165
R165 150
C165 650
-15V
Q172
Q182
R185 68
C185 330
Q190
+30V
+30 VOLTS
L198
R198 10
C198 2.2μF
-15V
-15 VOLTS
C197 1.0μF
L197
R197 10
-30V
-30 VOLTS
SEE PARTS LIST FOR EARLIER VALUES AND SERIAL NUMBER RANGES OF PARTS MARKED WITH BLUE OUTLINE.
A1 VERTICAL BOARD

not this

PARTS LOCATION GRID

Below SN B020000

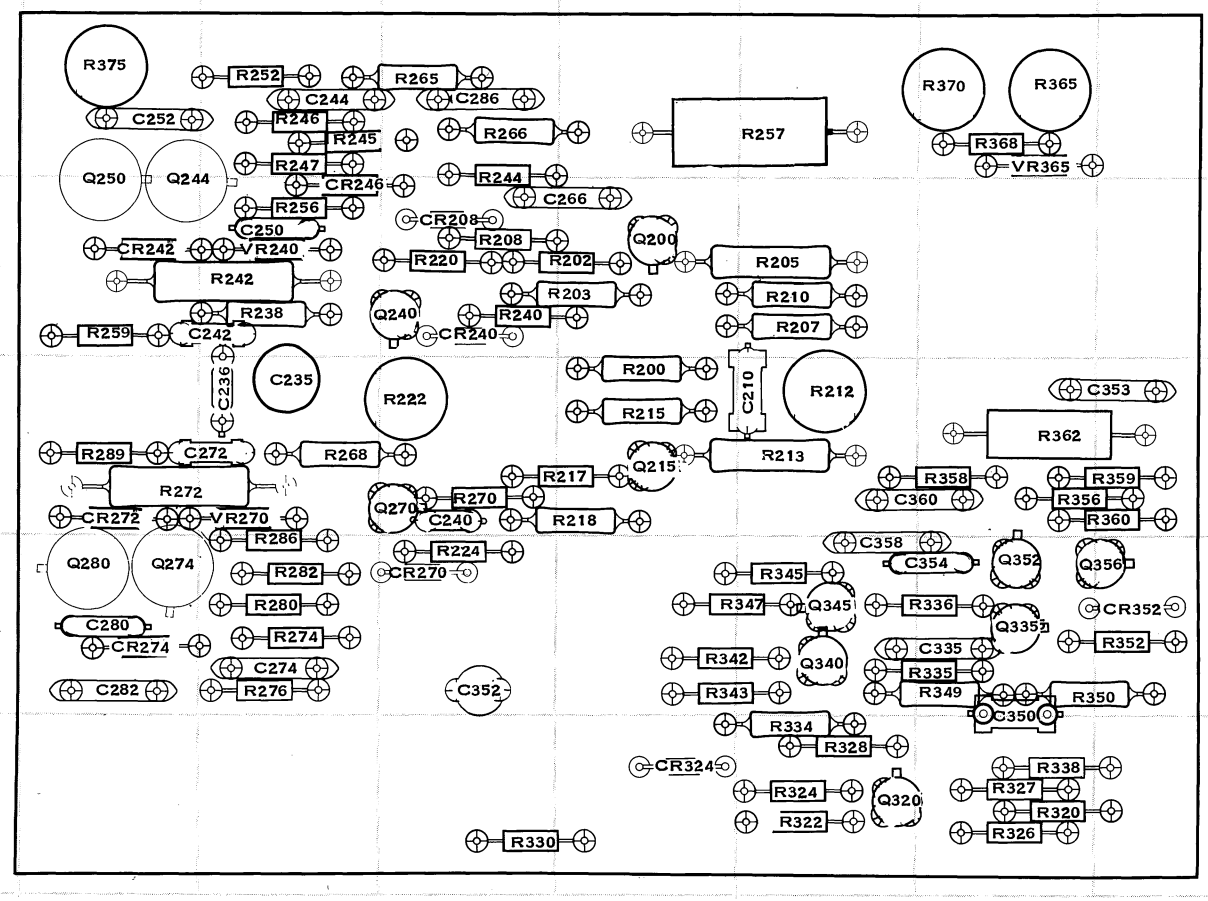

CKT NO	GRID LOC	CKT NO	GRID LOC	CKT NO	GRID LOC	CKT NO	GRID LOC	CKT NO	GRID LOC	CKT NO	GRID LOC	CKT NO	GRID LOC	CKT NO	GRID LOC
C210	L-3	C353	N-3	CR208	J-2	Q200	K-2	R200	K-3	R244	J-2	R289	H-3	R352	N-4
C235	I-3	C358	L-4	CR240	J-2	Q215	K-3	R202	K-2	R245	I-1	R320	M-5	R356	M-3
C236	I-3	C360	M-3	CR242	H-2	Q240	J-2	R203	K-2	R246	I-1	R322	L-5	R358	M-3
C240	J-3			CR246	I-2	Q244	H-2	R205	L-2	R247	I-1	R324	L-5	R359	N-3
C242	I-2			CR270	J-4	Q250	H-2	R207	L-2	R252	I-1	R326	M-5	R360	N-3
C244	I-1			CR272	H-3	Q270	J-3	R208	J-2	R256	I-2	R327	M-5	R362	M-3
C250	I-2			CR274	H-4	Q274	H-4	R210	L-2	R257	L-1	R328	L-5	R365	M-1
C252	H-1			CR324	K-5	Q280	H-4	R212	L-3	R259	H-2	R330	J-5	R368	M-1
C266	K-2			CR352	N-4	Q320	L-5	R213	L-3	R265	J-1	R334	L-5	R370	M-1
C272	I-3					Q335	M-4	R215	K-3	R266	J-1	R335	M-4	R375	H-1
C274	I-4					Q340	L-4	R217	K-3	R268	I-3	R336	M-4		
C280	H-4					Q345	L-4	R218	K-3	R270	J-3	R338	M-5	VR240	I-2
C282	H-4					Q352	M-4	R220	J-2	R272	H-3	R342	K-4	VR270	I-3
C286	J-1					Q356	N-4	R222	J-3	R274	I-4	R343	K-4	VR365	M-1
C335	M-4							R224	J-4	R276	I-4	R345	L-4		
C350	M-5							R238	I-2	R280	I-4	R347	K-4		
C352	J-4							R240	J-2	R282	I-4	R349	M-4		
C354	M-4							R242	I-2	R286	I-4	R350	N-4		

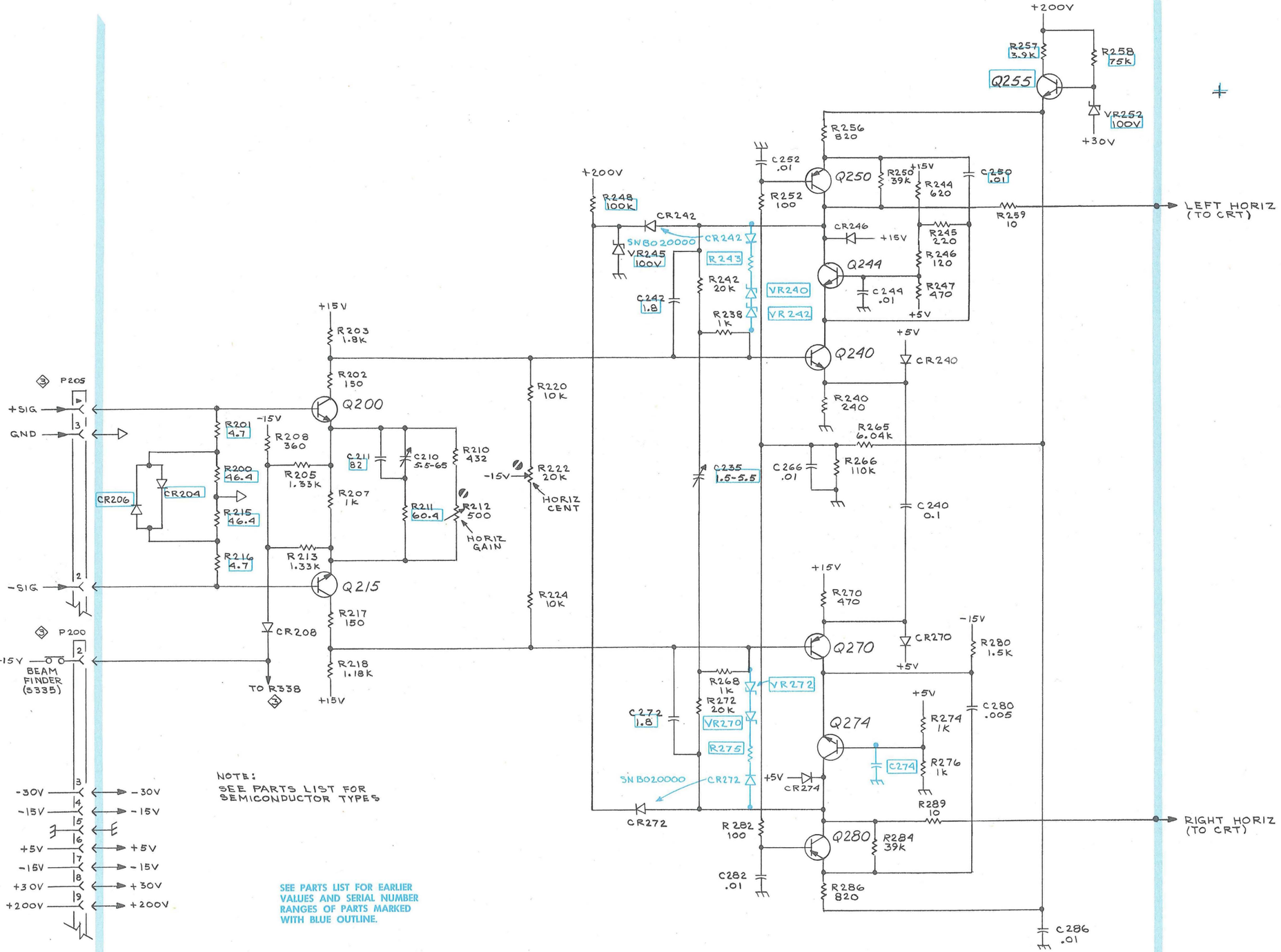

NOTE:
SEE PARTS LIST FOR SEMICONDUCTOR TYPES

SEE PARTS LIST FOR EARLIER VALUES AND SERIAL NUMBER RANGES OF PARTS MARKED WITH BLUE OUTLINE.

REV JAN 1974

D40

Ⓑ

HORIZONTAL AMPLIFIER ② hq

HORIZONTAL AMPLIFIER ②

HIGH VOLTAGE BOARD
PARTS LOCATION GRID

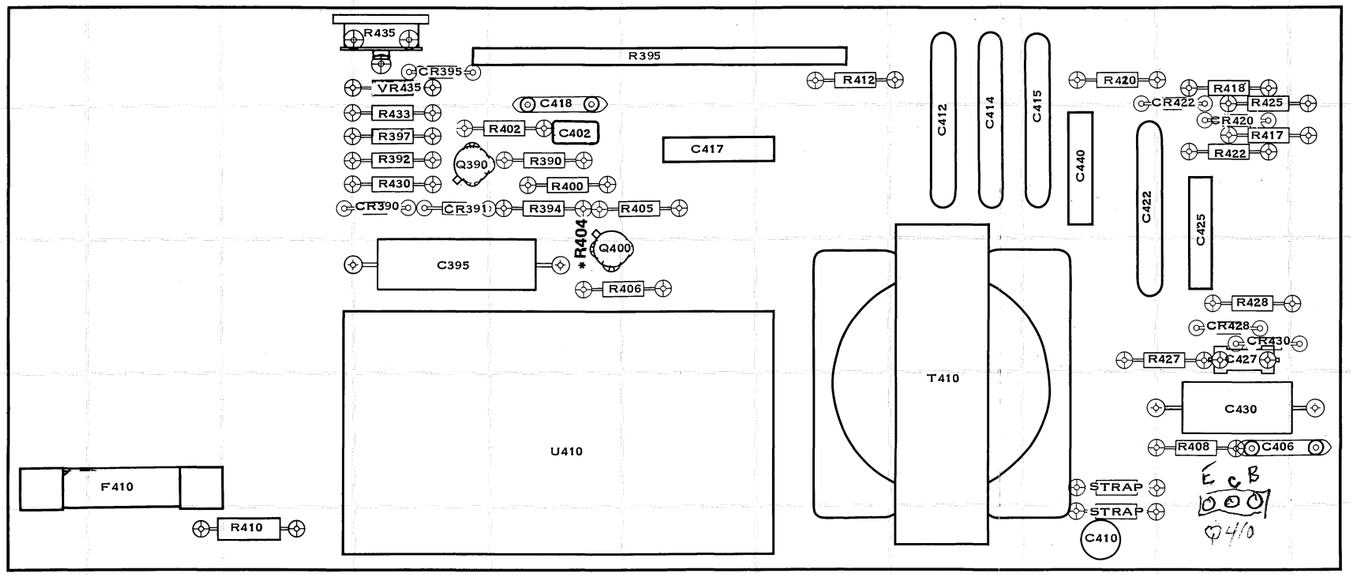

*See Parts List for serial number ranges.

CKT NO	GRID LOC	CKT NO	GRID LOC	CKT NO	GRID LOC	CKT NO	GRID LOC	CKT NO	GRID LOC	CKT NO	GRID LOC	CKT NO	GRID LOC	CKT NO	GRID LOC	CKT NO	GRID LOC
C395	D-3	CR390	D-2	F410	B-4	Q390	D-2	R390	E-2	R420	I-1	T410	H-4	U410	E-4	VR435	D-1
C402	E-2	CR395	D-1			Q400	E-3	R392	D-2	R422	J-2						
C406	J-4	CR420	J-2					R394	E-2	R425	J-1						
C410	I-5	CR422	J-1					R395	F-1	R427	J-3						
C412	H-2	CR428	J-3					R397	D-2	R428	J-3						
C414	H-2	CR430	J-3					R400	E-2	R430	D-2						
C415	I-2							R402	E-2	R433	D-2						
C417	F-2							R404	E-2	R435	D-1						
C418	E-1							R405	F-2								
C422	I-2							R406	E-3								
C425	J-2							R408	J-4								
C427	J-3							R410	C-5								
C430	J-4							R412	G-1								
C440	I-2							R417	J-2								
								R418	J-1								

FRONT PANEL
CONTROL BOARD
PARTS LOCATION GRID

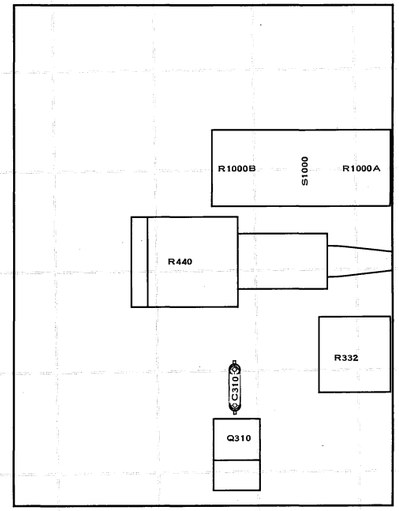

CKT NO	GRID LOC	CKT NO	GRID LOC	CKT NO	GRID LOC	CKT NO	GRID LOC
C310	C-5	Q310	C-5	R332	D-4	S1000	D-2
				R440	C-3		
				R1000A	E-2		
				R1000B	C-2		

ADJUSTMENTS
HIGH VOLTAGE
POWER SUPPLY CIRCUIT BOARD

Adjustment is generally required after a repair has been made, or after long time intervals in which normal aging of components may affect instrument accuracy. For initial inspection to verify instrument operation, the basic operation procedure in section 1 should be used (the instrument is checked with its covers on, using a minimum of peripheral equipment).

Before complete adjustment, thoroughly clean and inspect this instrument as outlined in the service section of the 5403 manual. Also, the system manual contains information for general maintenance of this instrument, including preventive maintenance, component identification and replacement, etc.

Services Available

Tektronix, Inc. provides complete instrument repair and adjustment at local Field Service Centers and at the Factory Service Center. Contact your local Tektronix Field Office or representative for further information.

NOTE

This adjustment need only be made if the CRT was changed.

1. Intensity Range, R435

Turn INTENSITY control fully counterclockwise. Adjust R435, through the hole in the high-voltage shield, so spot is just extinguished. Turn INTENSITY control clockwise and note that visible spot appears when INTENSITY control is between its 8 and 11 o'clock positions.

Equipment Required

For intensity range adjustment a vertical plug-in is required.

Preliminary Procedure

NOTE

The performance of this instrument can be checked at any temperature within the 0°C to +50°C range. Make any adjustments at a temperature of +25°C, ±5°C.

a. Remove the cabinet panels covering the D40.

b. Install a vertical plug-in in the right plug-in compartment.

c. Check that the correct nominal line-selector block has been installed on the line-selector pins and that the regulating range selected includes the input line voltage, see Installation section for complete instructions.

d. Connect the 5403-D40 to the Line voltage source and pull the POWER switch out to turn the instrument on.

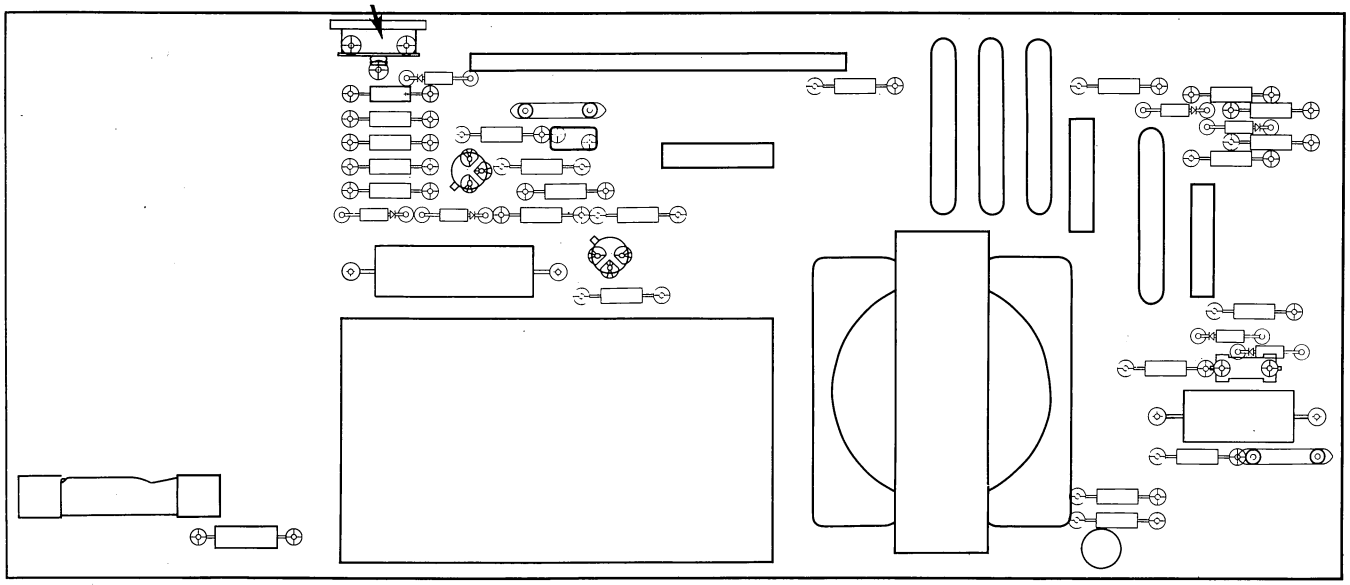

Equipment Required

1. Time-base plug-in unit.

2. Two vertical plug-in units, both of which must be dual-trace units.

3. Sinewave generator with a variable 0–6 volt signal amplitude at 1 kHz and 60 MHz[1].

Preliminary Procedure

NOTE

The performance of this instrument can be checked at any temperature within the 0°C to +50°C range. Make any adjustments at a temperature of +25°C, ±5°C.

a. Install a vertical dual-trace plug-in in the left plug-in compartment and a time-base plug-in in the right plug-in compartment.

b. Check that the correct nominal line-selector block has been installed on the line-selector pins and that the regulating range selected includes the input line voltage, see Installation section for complete instructions.

c. Connect the 5403-D40 to the line voltage source and pull the POWER switch out to turn the instrument on.

1. Check Trigger Amplifier

Connect a properly terminated 60 MHz[1] signal to channel 1 on the vertical plug-in. Set the time-base sec/div switch to .1 μ. Set the vertical and time-base plug-in triggering controls to trigger on + slope, channel 1, and left plug-in compartment signal.

Adjust the output amplitude of the sinewave generator for exactly 1 major graticule division of signal. Check that a stable display can be obtained.

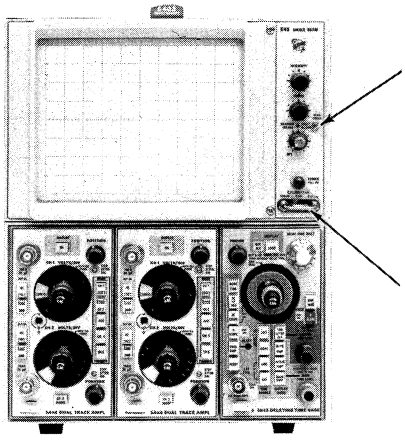

2. Check Beam Finder

Using the signal established in step 1 press the BEAM FINDER pushbutton. Check that the display intensity increases and that the signal can not be positioned out of the viewing area as long as the BEAM FINDER pushbutton is depressed.

Disconnect the signal.

3. Check Calibrator

Connect the signal from the front-panel CALIBRATOR loop to channel 1 on the vertical plug-in. Set the time-base sec/div switch to 5 m and the vertical channel 1 volts/div to .1. Adjust the time-base triggering controls for a stable display. Check for display four major graticule divisions high, ±1%.

Disconnect the signal.

4. Check Z Axis Amplifier

Connect a 5 volt, 1 kHz sinewave signal to the EXT INTENSITY INPUT connector. Also, use the sinewave signal to externally trigger the time-base plug-in. Set the time-base plug-in controls for an external, automatic, triggered 1 ms sweep. Check that bright spots occur at regular intervals along the trace. It may be necessary to reduce the trace brightness to observe the Z axis modulation.

Disconnect the signal.

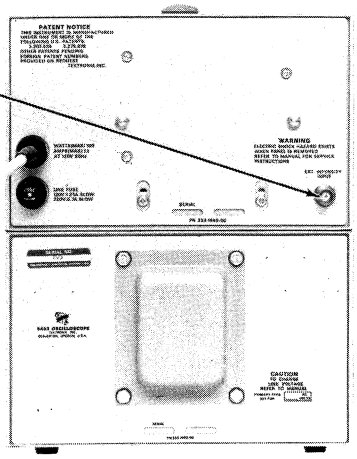

5. Check Chop and Alternate

Set the time-base sec/div switch to 50 m and push the chop pushbutton in. Set the vertical plug-in for dual-trace operation. Check for two spots, one above the other, going across the CRT.

Install a second dual-trace plug-in in the center plug-in compartment and set its controls for dual-trace operation. Set the time-base chop pushbutton to its out position. Check for two sweeps for the left plug-in (one for each channel), then two sweeps for the center plug-in, alternately.

[1] A 5A48 Dual Trace Amplifier and a 5B42 Delaying Time Base plug-in units were used for this check. If other plug-in units are used, the trigger amplifier band pass will depend on the vertical plug-in unit band pass and the triggering capabilities of the time base plug-in unit.

S302 POWER PULL ON
F300 1.25A
S300
P300
120/220 VAC
TO POWER SUPPLY
P810 LOCATED IN POWER UNIT SEE LOW VOLTAGE SUPPLY DIAG.

A2 HORIZONTAL BOARD
A3 HIGH VOLTAGE BOARD

+200V
R362 15K
C353 .01
R360 470
C360 0.1
R359 3.9K
R356 1K
Q356
R358 100K
C358 .01
CR352
C354 .005
R349 16.9K
R350 16.9K
C350 1.0
+5V
R343 240
R342 51
+15V
R347 2.2K
Q352
Q345
Q340
R352 220
C352 2.2µF
+5V
R345 47

UNBLANKING
READOUT UNBLANKING
P205
R332 20K INTENSITY
P200
R330 10K
R334 220K
-15V
C335 .01
R335 10K
+5V
Q335
R336 220K
R338 470K
TO CR208
P200
S335 BEAM FINDER
-15V
P413 +38 UNREG
+15V
R328 3.3K
R326 2K
R327 6.2K
Q320
J300 EXT INTENSITY INPUT
R320 10K
R322 20K
-15V
CR324
R324 3.3K
-15V

U410 X4 HV MULT.
F410 0.3A
295Ω
R410 3.3Ω
C410 4.7µF
P413
Q410
HEAT SINK
T410
+30V
CR395
C395 15µF
-15V
+200V
R397 470K
R395A
+200V
R392 150K
R390 1K
Q390
CR390
CR391
R394 4.7K
-15V
R400 100
R402 1K
C402 .068
+5V
R404 27
Q400
R405 27K
-15V
R406 390
R408 10
C406 0.1

+200V
+30V
+5V
-15V
P302
2
6.3VAC
1
P410

SEE PARTS LIST FOR EARLIER VALUES AND SERIAL NUMBER RANGES OF PARTS MARKED WITH BLUE OUTLINE.

INTENSITY RANGE
+200V
R433 39K
VR435 100V
R435 250K
R430 47K
+30V
C430 2µF
CR430
CR428
R428 1K
C425 .001 5KV
R425 1K
CR422
C422 .01 4KV
C427 27
R427 1M
R422 10M
R420 10K
+12KV

CR412
C412 .01 4KV
R412 22K
C414 .01 4KV
C415 .01 4KV
R415 47
(TP) -3000V
R417 100K
R418 100K
C417 .001
R395B
C418 0.1

TRACE ROTATION
+30V
R375 20K
-30V
+12KV
L375
V400
H
V

P360
R365 100K
VR365 62V
GEOM
+30V
R368 47K
ASTIG
R370 100K
-15V
8
9
11
3
7
2
4
3
2 1 14

R395D
FOCUS
A4 FRONT PANEL BD
R440 5M
C440 .001 5KV
R395C

D40
©
Z AXIS AMPLIFIER AND CRT CIRCUIT 3
CJH REV MAY 1974

A2 HORIZONTAL BOARD

EXT INTENSITY INPUT

L375

R320 3

TRACE ROTATION 3

GEOM 3

ASTIG 3

Q200 Q215 GND Q340 R334

P205

P360

8 9-11 7

TO CRT 3

R259 R289

CRT DEFLECTION PLATES

R352 3

-30V -15V +5V +15V +30V +200V

3 R330

2 CR208

P200

INTENSITY

BEAM FIND

P300

-15V +5V +30V +200V

Z AXIS

CR428 C422 3

A3 HIGH VOLTAGE BOARD 3

P310

A1 VERTICAL BOARD 1

+30V -15V -30V

1 CR158

R192 R196

U100-1 U100-5

BEAM FIND

+12 KV ANODE

U410 4X MULT 3

1 HEATER 14

3 TO CRT

PIN 3 R422 3

PIN 4

PIN 2

A4 FRONT PANEL CONTROL BOARD

3 FOCUS

R395D 3

2 3 BEAM FINDER

INTENSITY 3

-15V

+20V

C310 .001

+15V

Q310

R1000B 5k

GRAT. ILLUM.

HEAT SINK

3 READOUT INTENSITY

+15V -15V

P314

P304

PROBE CAL LOOP

3 +38V TO F410

P302

P413 P410

6.3 VAC

DISPLAY UNIT

POWER SUPPLY/AMPLIFIER MODULE

DELAY LINE

P755

AB +15V

AA +5V

Z

AC -15V

BF BG GND BI BK

R1140 R1150 R1016 CR1018

R1002 BA

A3 READOUT BOARD 3

AE AD E F G H

U1130-4 Q1100 U1130-2 U1130-15 GND R1016

P755 POSITION WITHOUT READOUT

R670 R638 Q752 Q748 GND R768

+HORIZ -HORIZ UNBLANK

R640 R660

1

TO READOUT

+15V +5V GND -15V

J630-16A J630-17B

DS310 DS312 DS314

A5 GRATICULE LAMP BOARD

3 DISPLAY UNIT

AC INPUT FROM PWR SW

P802 P803 P810

CALIBRATOR

+200V +38V(U) +30V +20V +15V +5V GND -15V -20V -30V -38V(U) LINE TRIG SIG

+200V +30V +15V +5V -15V -30V

+200V +38V(U) +30V +20V +15V +5V GND -15V -20V -30V -38V(U) LINE TRIG SIG

1 3 A1 INTERFACE BOARD

2 A2 POWER SUPPLY BOARD

MECHANICAL PARTS LIST

Replacement parts should be ordered from the Tektronix Field Office or Representative in your area. Changes to Tektronix products give you the benefit of improved circuits and components. Please include the instrument type number and serial number with each order for parts or service.

ABBREVIATIONS

BHB	binding head brass	h	height or high	OHB	oval head brass
BHS	binding head steel	hex.	hexagonal	OHS	oval head steel
CRT	cathode-ray tube	HHB	hex head brass	PHB	pan head brass
csk	countersunk	HHS	hex head steel	PHS	pan head steel
DE	double end	HSB	hex socket brass	RHS	round head steel
FHB	flat head brass	HSS	hex socket steel	SE	single end
FHS	flat head steel	ID	inside diameter	THB	truss head brass
Fil HB	fillister head brass	lg	length or long	THS	truss head steel
Fil HS	fillister head steel	OD	outside diameter	w	wide or width

Fig. & Index No.	Tektronix Part No.	Serial/Model No. Eff	Serial/Model No. Disc	Qty	Description 1 2 3 4 5
1-1	200-1218-00			1	BEZEL
					(ATTACHING PARTS)
-2	211-0188-00			2	SCREW, 4-40 x 0.70 inch
					- - - * - - -
-3	337-1440-00			1	SHIELD, implosion
-4	386-2544-00			4	SUPPORT, CRT, front
-5	366-0494-00			2	KNOB, charcoal--INTENSITY & FOCUS
	- - - - - -			-	each knob includes:
	213-0153-00			1	SETSCREW, 5-40 x 0.125 inch, HSS
-6	366-1391-00			1	KNOB, gray--READOUT INTENS
	- - - - - -			-	knob includes:
	213-0239-00			1	SETSCREW, 3-48 x .062 inch, HSS
-7	366-1077-00			1	KNOB, charcoal--GRAT ILLUM
	- - - - - -			-	knob includes:
	213-0153-00			1	SETSCREW, 5-40 x 0.125 inch, HSS
-8	384-1161-00			1	SHAFT, extension, power switch
-9	358-0216-00			1	BUSHING, 0.257 ID x 04.12 inch OD
-10	119-0238-00			1	CURRENT LOOP
					(ATTACHING PARTS)
	210-0442-00			2	NUT, hex., 3-48 x 0.188 inch
	210-0004-00			2	WASHER, lock, internal, 0.12 ID x 0.26 inch OD
	210-0994-00			2	WASHER, flat, 0.125 ID x 0.25 inch OD
	210-0935-00			2	WASHER, fiber, 0.14 ID x 0.375 inch OD
-11	361-0059-01			1	SPACER, current loop
-12	210-0593-00			2	NUT, current loop, 3-48 x 0.25 inch
					- - - * - - -
-13	260-1238-00			1	SWITCH--BEAM FINDER w/hardware
-14	- - - - - -			1	CIRCUIT BOARD ASSEMBLY--FRONT PANEL CONTROL
	- - - - - -			-	(See A4 Electrical List)
	- - - - - -			-	circuit board assembly includes:
-15	131-0608-00	B010100	B010199	9	TERMINAL, pin, 0.365 inch long
	131-0608-00	B010200		1	TERMINAL, pin, 0.365 inch long
-16	200-1327-00			1	COVER, focus pot
-17	210-0457-00			1	NUT, keps, 6-32 x 0.312 inch
-18	211-0504-00			1	SCREW, 6-32 x 0.25 inch, PHS

Fig. & Index No.	Tektronix Part No.	Serial/Model No. Eff	Disc	Qty	1 2 3 4 5 Description
1-19	384-1121-00			1	SHAFT, 1.41 inches long
	175-0831-00	B010200		FT	WIRE, electrical, 8 wire ribbon, 0.9 ft long
	131-0707-00	B010200		8	CONNECTOR, terminal (22-26 AWG)
	352-0166-04	B010200		1	HOLDER, terminal connector, 8 wire (yellow)
					(ATTACHING PARTS)
-20	210-0583-00			2	NUT, hex., 0.25-32 x 0.312 inch
-21	210-0940-00			2	WASHER, flat, 0.25 ID x 0.375 inch OD
					- - - * - - -
-22	- - - - - -			1	CIRCUIT BOARD ASSEMBLY--GRAT LAMPS (See A5
	- - - - - -			-	Electrical List)
	- - - - - -			-	circuit board assembly includes:
-23	378-0732-00			1	REFLECTOR, light
-24	426-1017-00			2	MOUNT, reflector
-25	211-0062-00			2	SCREW, 2-56 x 0.312 inch, PHS
-26	131-0704-00			3	CONTACT, spring
					(ATTACHING PARTS)
-27	210-0759-00			3	EYELET, .040 ID x 0.61 OD x 0.192 inch long
-28	210-0957-00			3	WASHER, flat, .0625 ID x 0.125 inch OD
					(ATTACHING PARTS)
-29	213-0088-00			2	SCREW, thread forming, 4-40 x 0.25 inch, PHS
					- - - * - - -
-30	358-0378-00			1	BUSHING, sleeve
-31	333-1722-00			1	PANEL, front
-32	376-0127-00			1	COUPLER, shaft
-33	260-1222-00			1	SWITCH, power
-34	- - - - - -			1	CIRCUIT BOARD ASSEMBLY--HORIZONTAL (See A2
	- - - - - -			-	Electrical List)
	- - - - - -			-	circuit board assembly includes:
-35	131-0608-00			17	TERMINAL, pin, 0.365 inch long
					(ATTACHING PARTS)
-36	211-0008-00			2	SCREW, 4-40 x 0.25 inch, PHS
					- - - * - - -
-37	351-0087-00			2	GUIDE, circuit board
-38	- - - - - -			-	CIRCUIT BOARD ASSEMBLY--VERTICAL (See A1
	- - - - - -			-	Electrical List)
	- - - - - -			-	circuit board assembly includes:
-39	136-0252-04			14	SOCKET, pin connector
-40	214-1291-00			2	HEATSINK, transistor
-41	352-0163-00			1	HOLDER, terminal connector, 5 wire (black)
-42	131-0707-00			5	CONNECTOR, terminal
-43	175-0828-00			ft	WIRE, electrical, 5 wire ribbon, 0.9 feet long
					(ATTACHING PARTS)
-44	211-0008-00			2	SCREW, 4-40 x 0.25 inch, PHS
					- - - * - - -
-45	195-0119-00			1	LEAD SET, CRT deflection
-46	441-1090-00			1	CHASSIS, vertical
					(ATTACHING PARTS)
-47	211-0008-00			2	SCREW, 4-40 x 0.25 inch, PHS
-48	210-0586-00			3	NUT, keps, 4-40 x 0.25 inch
					- - - * - - -
-49	348-0239-00			2	GROMMET, U shaped
-50	337-1714-00			1	SHIELD, electrical, HV
					(ATTACHING PARTS)
-51	211-0008-00			2	SCREW, 4-40 x 0.25 inch, PHS
					- - - * - - -

Fig. & Index No.	Tektronix Part No.	Serial/Model No. Eff	Serial/Model No. Disc	Qty	1 2 3 4 5 Description
1-52	- - - - - -			1	CIRCUIT BOARD ASSEMBLY--HV (See A3 Electrical
	- - - - - -			-	List)
	- - - - - -			-	circuit board assembly includes:
-53	131-0566-00			1	LINK, terminal connector
-54	131-0608-00			34	TERMINAL, pin, 0.365 inch long
	131-0589-00			2	TERMINAL, pin, 0.46 inch long
-55	211-0008-00			3	SCREW, 4-40 x 0.25 inch, PHS
-56	214-0579-00			1	TERMINAL, test point
-57	344-0154-00			2	FUSEHOLDER
					(ATTACHING PARTS)
-58	211-0008-00			2	SCREW, 4-40 x 0.25 inch, PHS
					- - - * - - -
-59	- - - - - -			1	TRANSISTOR (See Q410 Electrical List)
					(ATTACHING PARTS)
-60	344-0236-00			1	CLIP, spring tension
-61	342-0082-00			1	INSULATION, plate
					- - - * - - -
-62	441-1102-00			1	CHASSIS--HV-HORIZONTAL
					(ATTACHING PARTS)
-63	211-0008-00			4	SCREW, 4-40 x 0.25 inch, PHS
					- - - * - - -
-64	161-0033-12			1	CABLE ASSEMBLY, power w/terminal
-65	200-1075-00			1	COVER, terminal insulating
-66	358-0366-00			1	BUSHING, strain relief, bottom
-67	358-0365-00			1	BUSHING, strain relief, top
-68	200-1004-00			1	CABLE NIPPLE, 1.30 inches long
-69	333-1645-00			1	PANEL, rear
					(ATTACHING PARTS)
-70	210-0401-00			2	NUT, cap hex., 6-32 x 0.3125 inch
					- - - * - - -
-71	352-0362-00	B010100	B010564	1	FUSEHOLDER, w/hardware
	352-0076-00	B010565		1	FUSEHOLDER, w/hardware
					(ATTACHING PARTS)
-72	210-0873-00			1	WASHER, rubber, 0.50 ID x 0.688 inch OD
					- - - * - - -
-73	131-0955-00			1	CONNECTOR, receptacle, female, BNC, w/hardware
-74	210-0201-00			1	LUG, solder, SE #6
					(ATTACHING PARTS)
-75	210-0586-00			1	NUT, keps, 4-40 x 0.25 inch
					- - - * - - -
-76	260-0618-00			1	SWITCH, thermostatic, NC
					(ATTACHING PARTS)
-77	210-0586-00			2	NUT, keps, 4-40 x 0.25 inch
					- - - * - - -
-78	200-0616-01			1	COVER, CRT socket
-79	136-0301-01			1	SOCKET, CRT
-80	343-0397-00			1	CLAMP, hold down, CRT
					(ATTACHING PARTS)
-81	361-0496-00			1	SPACER, block
-82	211-0516-00			2	SCREW, 6-32 x 0.875 inch, PHS

Fig. & Index No.	Tektronix Part No.	Serial/Model No. Eff	Serial/Model No. Disc	Qty	Description
1-83	354-0409-00			1	CLAMP, CRT, gray plastic
					(ATTACHING PARTS)
-84	211-0632-00			1	SCREW, 6-32 x 2.25 inch, Fil HS
-85	343-0123-01			2	CLAMP, CRT retainer
-86	220-0444-00			1	NUT, 6-32 x 0.25 inch, sq. SS
					- - - * - - -
-87	348-0070-01			3	PAD, CRT, orange
-88	337-1712-02			1	SHIELD SECTION, CRT, rear
-89	348-0006-00			1	GROMMET, 0.75 inch
-90	348-0145-00			1	GROMMET, U shaped
-91	334-1379-00			1	TAG, warning
-92	337-1712-00			1	SHIELD SECTION, CRT, front
					(ATTACHING PARTS)
-93	211-0587-00			1	SCREW, 6-32 x 0.188 inch, HSB
					- - - * - - -
-94	119-0392-00			1	DELAY LINE ASSEMBLY
	- - - - - -			-	delay line assembly includes:
-95	131-1090-00			2	CONTACT, electric
-96	407-1185-00			1	BRACKET, delay line
					(ATTACHING PARTS)
-97	211-0007-00			4	SCREW, 4-40 x 0.188 inch, PHS
					- - - * - - -
-98	380-0304-00			1	HOUSING, delay line
					(ATTACHING PARTS)
-99	210-0457-00			4	NUT, keps, 6-32 x 0.312 inch
-100	343-0081-00			1	CLAMP, cable
					- - - * - - -
-101	426-0950-00			1	FRAME ASSEMBLY--display unit
-102	131-0026-00			1	BUTTON, plug, anode
-103	200-0544-00			1	COVER, anode connector
-104	179-1969-00			1	WIRING HARNESS, main
	- - - - - -			-	wiring harness includes:
-105	131-0621-00			19	CONNECTOR, terminal (22-26 AWG)
-106	131-0861-00			3	TERMINAL, quick disconnect
-107	200-1075-00			3	COVER, terminal insulating
-108	352-0199-03			1	HOLDER, terminal connector, 3 wire (orange)
-109	175-0825-00			ft	WIRE, electrical, 2 wire ribbon, 0.4 feet long
-110	175-0826-00			ft	WIRE, electrical, 3 wire ribbon, 0.8 feet long
-111	175-0831-00	B010100	B010199	ft	WIRE, electrical, 8 wire ribbon, 0.9 feet long
-112	175-0832-00			ft	WIRE, electrical, 9 wire ribbon, 0.7 feet long
-113	131-0707-00	B010100	B010199	37	CONNECTOR, terminal (22-26 AWG)
	131-0707-00	B010200		24	CONNECTOR, terminal (22-26 AWG)
-114	131-0371-00			2	CONNECTOR, terminal (attach to current loop)
-115	352-0161-00			1	HOLDER, terminal connector, 3 wire (black)
-116	352-0166-04	B010100	B010199	2	HOLDER, terminal connector, 8 wire (yellow)
-117	352-0167-00			2	HOLDER, terminal connector, 9 wire (black)
	175-0855-00			ft	WIRE, electrical, 10 wire ribbon, 1.167 feet long
	175-0860-00			ft	WIRE, electrical, 5 wire ribbon, 1.625 feet long
	175-0863-00			ft	WIRE, electrical, 2 wire ribbon, 1.167 feet long
	352-0163-05			1	HOLDER, terminal, connector, 5 wire (green)
	352-0168-02			1	HOLDER, terminal, connector, 10 wire (red)
	352-0169-03			1	HOLDER, terminal, connector, 2 wire (orange)
	352-0199-03			1	HOLDER, terminal, connector, 3 wire (orange)
	352-0201-05			1	HOLDER, terminal, connector, 5 wire (green)
	352-0206-02			1	HOLDER, terminal, connector, 10 wire (red)

©

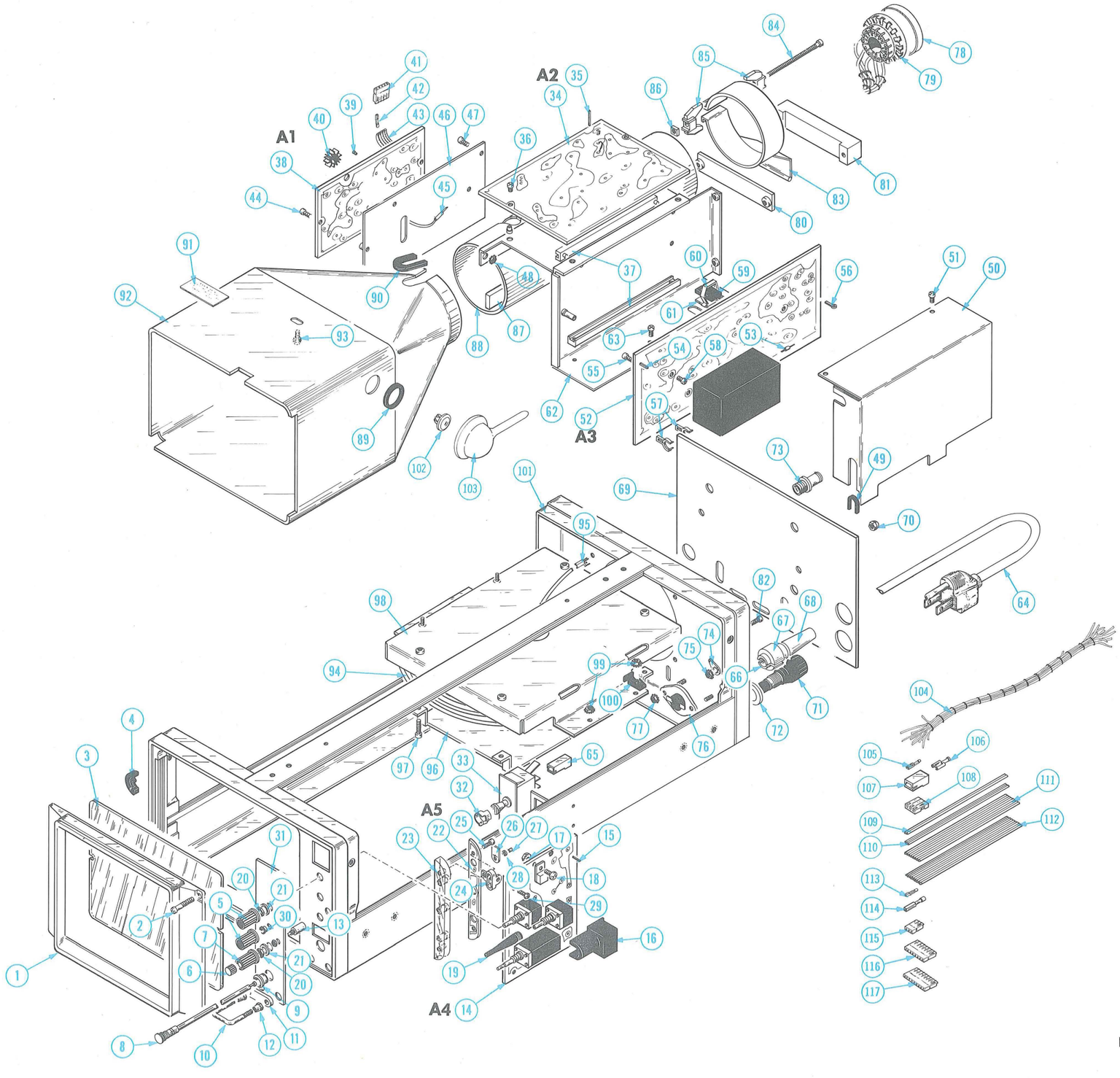

D-40 DISPLAY MODULE

FIG. 2 ACCESSORIES & REPACKAGING

ACCESSORIES

Fig. & Index No.	Tektronix Part No.	Serial/Model No. Eff	Serial/Model No. Disc	Qty	1 2 3 4 5	Description
2-	070-1448-00			1		MANUAL, instruction (not shown)

REPACKAGING

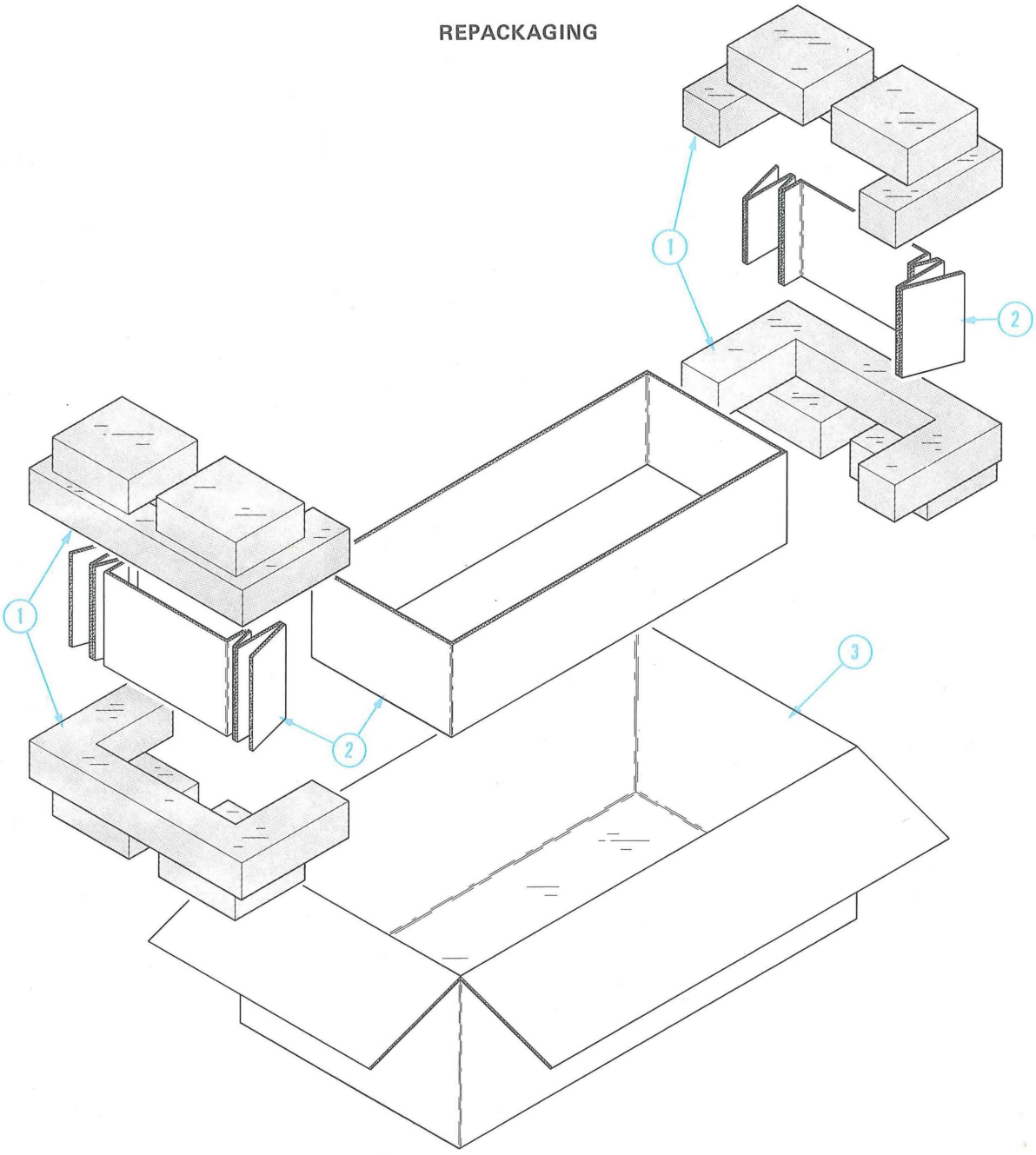

Fig. & Index No.	Tektronix Part No.	Serial/Model No. Eff	Disc	Qty	1 2 3 4 5	Description
2-	065-0150-00			1		CARTON ASSEMBLY, for display & power
	- - - - - - - - - -			-		modules
	- - - - - - - - - -			-		carton assembly includes:
-1	004-0281-00			2		FRAME, top & bottom
-2	004-1097-00			1		PAD SET, 3 piece
-3	004-0791-00			1		CARTON

TEKTRONIX®
committed to technical excellence

MANUAL CHANGE INFORMATION

PRODUCT D40
EFF SN B020716-up

CHANGE REFERENCE M22,235
DATE 9-30-74

CHANGE:	DESCRIPTION

ELECTRICAL PARTS LIST AND SCHEMATIC CHANGES

CHANGE TO:

C250	283-0142-00	0.0027μF, Cer, 5%, 200 V

MANUAL CHANGE INFORMATION

At Tektronix, we continually strive to keep up with latest electronic developments by adding circuit and component improvements to our instruments as soon as they are developed and tested.

Sometimes, due to printing and shipping requirements, we can't get these changes immediately into printed manuals. Hence, your manual may contain new change information on following pages.

A single change may affect several sections. Sections of the manual are often printed at different times, so some of the information on the change pages may already be in your manual. Since the change information sheets are carried in the manual until ALL changes are permanently entered, some duplication may occur. If no such change pages appear in this section, your manual is correct as printed.