DESCRIPTION

The M177A is a 5-Bit DAC designed for use with the 203-0155-90 (M155A) in parallel-serial A/D converter systems. Five precision binarily-scaled current sources are independently switched to either I or $\overline{I}$ according to the ECL digital input word. I and $\overline{I}$ are supplementary current outputs with a voltage compliance of -1.6 to +3.1 volts. Switching is done by an emitter-coupled pair driven differentially by an amplifier which converts the single-ended input to a level-shifted differential drive. Two unswitched LSB current sources are provided for a particular application. Settling time to 8-bits with a 240 Ω, 10 pF load is 15 ns.

A reference current equal to 1/2 I (MSB) is set up with an external resistor, voltage reference, and op-amp. I (MSB) is designed to be 12.8 mA. Binarily-weighted emitter resistors are required and are provided by 155-0167-01 (H710). Maximum accuracy is achieved by functionally trimming these resistors, dropping several volts across them, and operating the outputs into a fixed voltage.

The M177A is operated between ground and -5.2 volts with typical power dissipation of 240 mW depending on usage.

PROCESS . . . . . SHF II

POWER SUPPLY. . . . . -5.2 Volts

PACKAGE . . . . . 16 Pin TO-8 Can

DESIGNERS. . . . . Stew Taylor/Bob Nordstrom

INSTRUMENT USAGE . . . . . .

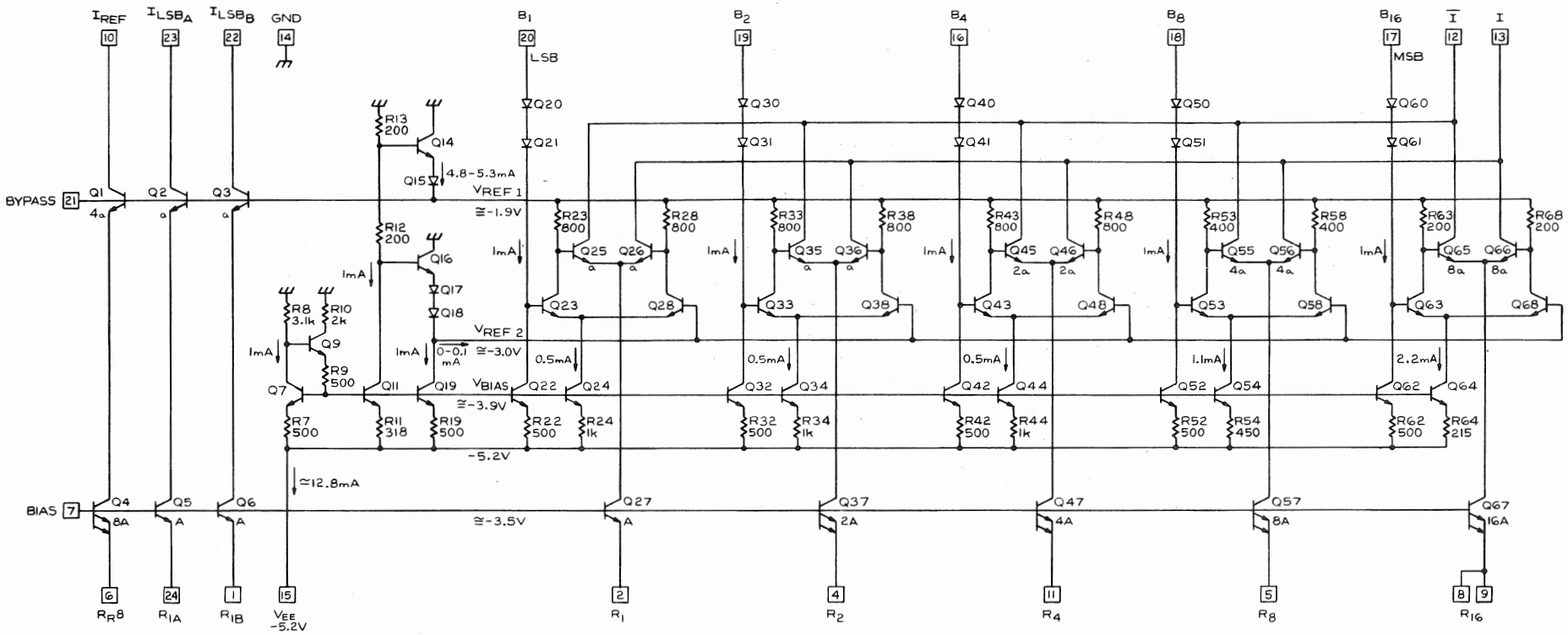

ENGR	A. Taylor R. Hodgkin	12-9-76	PROCESS	SHF II
DWN BY	J. Langley	11-1-76	PACKAGE	HYBRID
CHK BY	Jan Forsberg	3-4-77	DIE SIZE	83mil X 45mil
TYPE	MONOLITHIC	5-BIT D/A CONVERTER		MI77A
INTEGRATED CIRCUIT ENG/MFG TEKTRONIX, INC. BEAVERTON, OREGON, U.S.A.		PART NO. 203-0177-90		