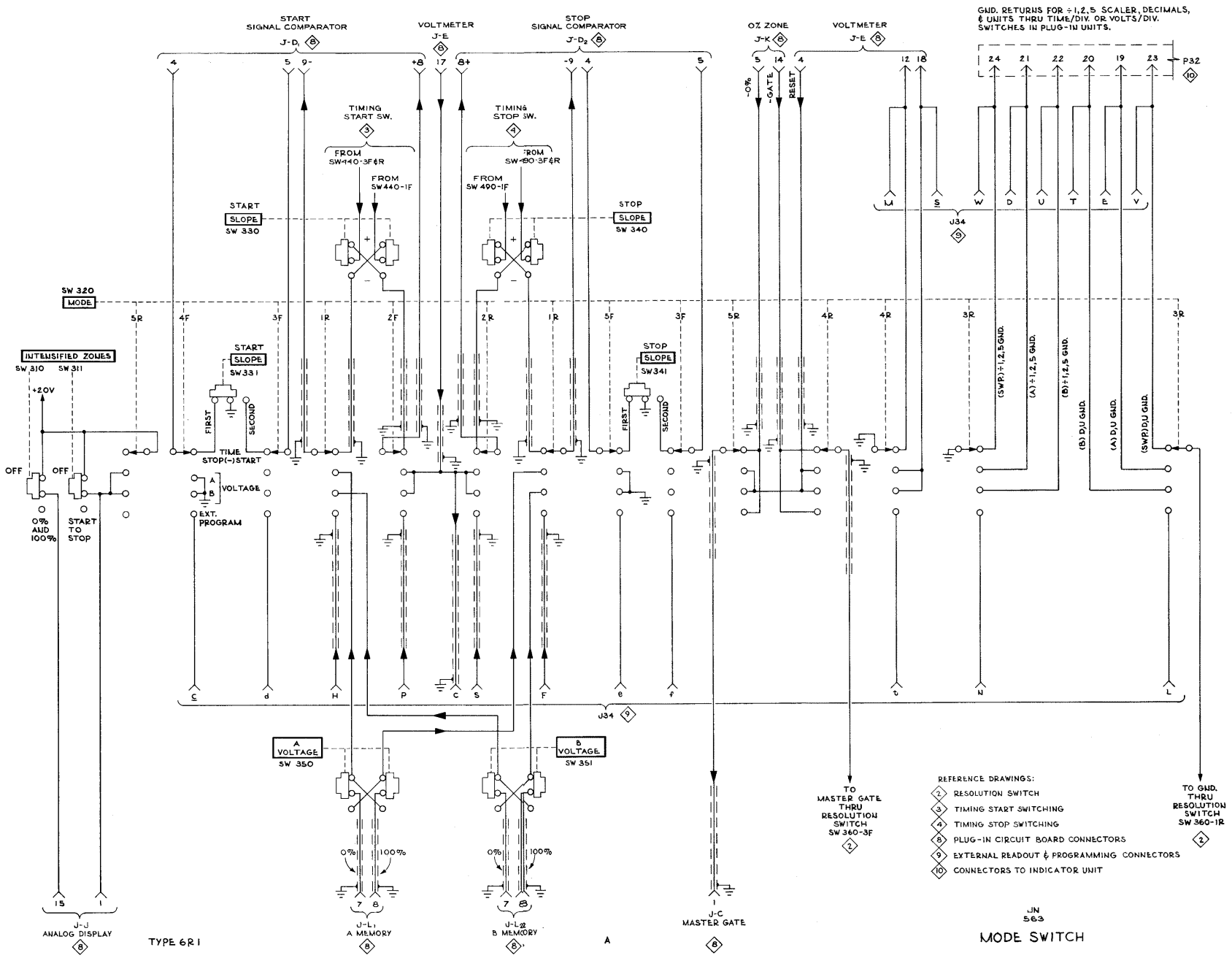
START SIGNAL COMPARATOR
J-D1 8
VOLTMETER
J-E 8
STOP SIGNAL COMPARATOR
J-D2 8
0% ZONE
J-K 8
VOLTMETER
J-E 8
GND. RETURNS FOR ÷1,2,5 SCALER, DECIMALS, & UNITS THRU TIME/DIV. OR VOLTS/DIV. SWITCHES IN PLUG-IN UNITS.
P32 10
TIMING START SW. 3
FROM SW440-3F&R
FROM SW440-1F
TIMING STOP SW. 4
FROM SW490-3F&R
FROM SW490-1F
START SLOPE SW 330
STOP SLOPE SW 340
SW 320 MODE
INTENSIFIED ZONES
SW 310 SW 311
+20V
START SLOPE SW331
STOP SLOPE SW341
FIRST
SECOND
OFF
0% AND 100%
START TO STOP
TIME STOP(-) START
VOLTAGE
EXT. PROGRAM
-0%
-GATE
RESET
J34 9
(SWP.)÷1,2,5 GND.
(A)÷1,2,5 GND.
(B)÷1,2,5 GND.
(B) D,U GND.
(A) D,U GND.
(SWP.)D,U GND.
A VOLTAGE SW 350
B VOLTAGE SW 351
0%
100%
J-J ANALOG DISPLAY 8
J-L1 A MEMORY 8
J-L2 B MEMORY 8
J-C MASTER GATE 8
TO MASTER GATE THRU RESOLUTION SWITCH SW 360-3F 2
TO GND. THRU RESOLUTION SWITCH SW 360-1R 2
REFERENCE DRAWINGS:
2 RESOLUTION SWITCH
3 TIMING START SWITCHING
4 TIMING STOP SWITCHING
8 PLUG-IN CIRCUIT BOARD CONNECTORS
9 EXTERNAL READOUT & PROGRAMMING CONNECTORS
10 CONNECTORS TO INDICATOR UNIT
TYPE 6R1
A
JN 563
MODE SWITCH

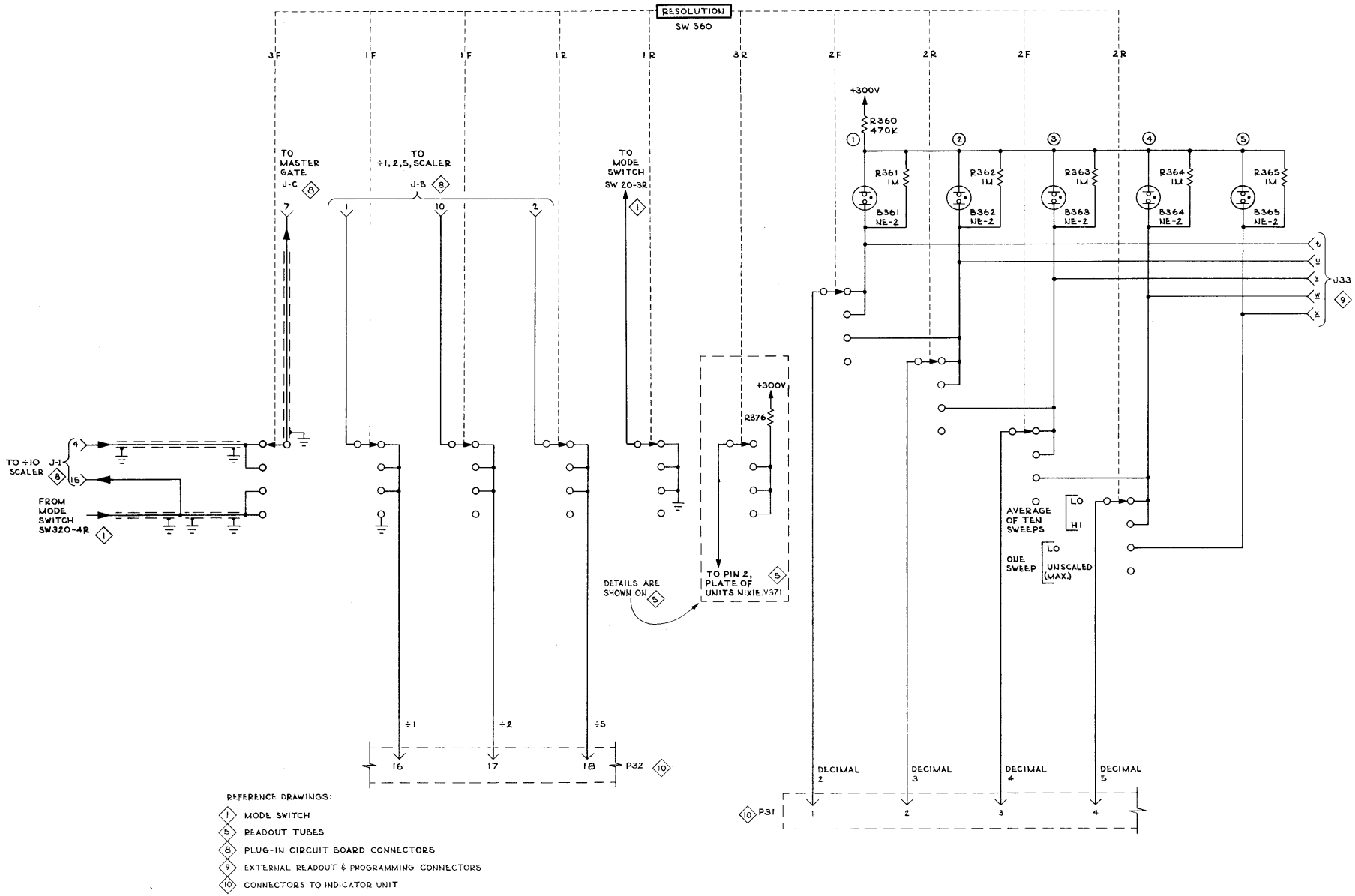

TYPE 6R1

A

JN
563

RESOLUTION SWITCH

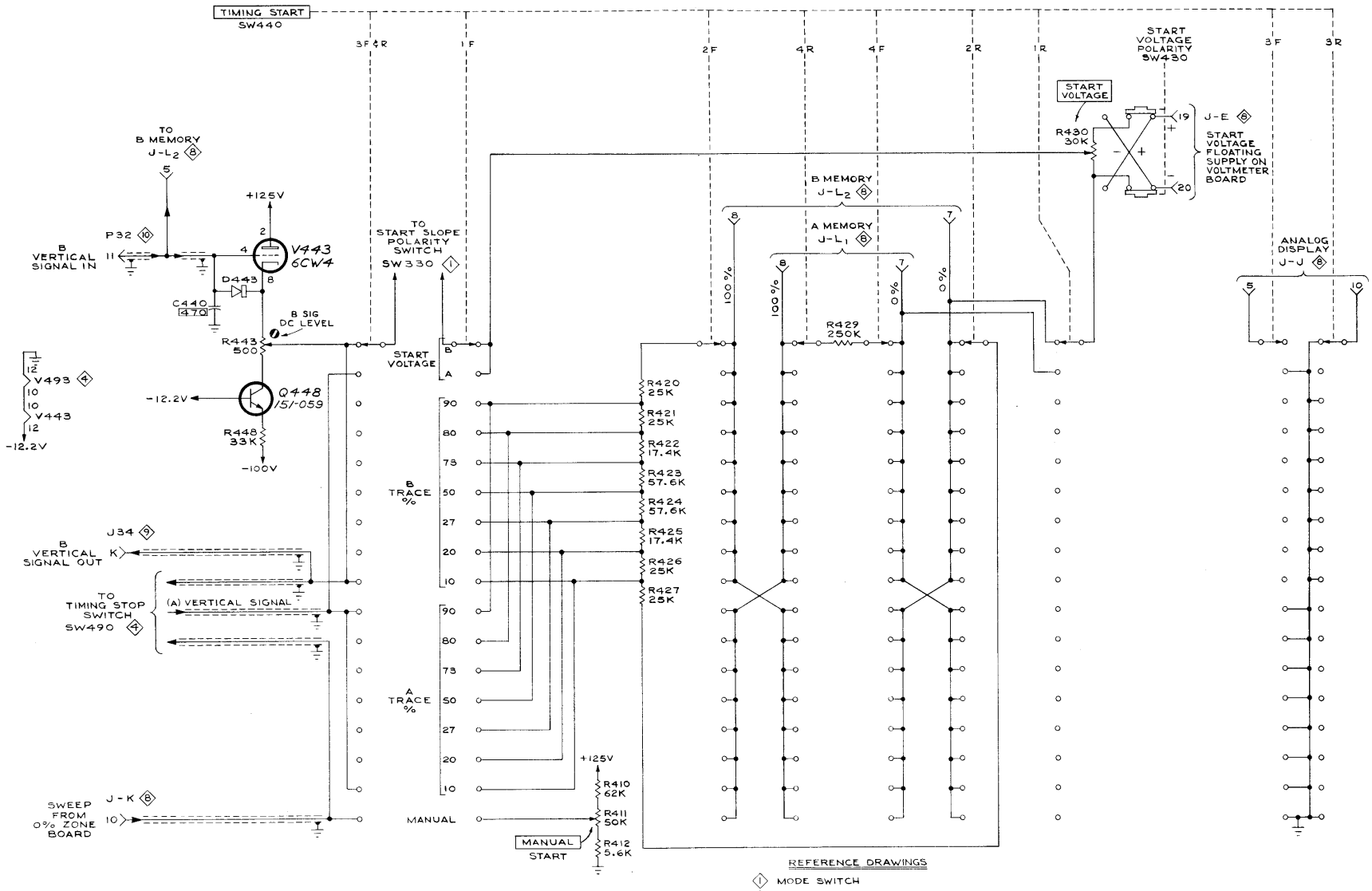

REFERENCE DRAWINGS

- (1) MODE SWITCH
- (4) TIMING STOP SWITCHING
- (8) PLUG-IN CIRCUIT BOARD CONNECTORS
- (9) EXTERNAL READOUT & PROGRAMMING CONNECTORS
- (10) CONNECTORS TO INDICATOR UNIT

SEE PARTS LIST FOR EARLIER VALUES AND S/N CHANGES OF PARTS MARKED WITH BLUE OUTLINE

TYPE 6R1

A

MRH 563

TIMING START SWITCHING

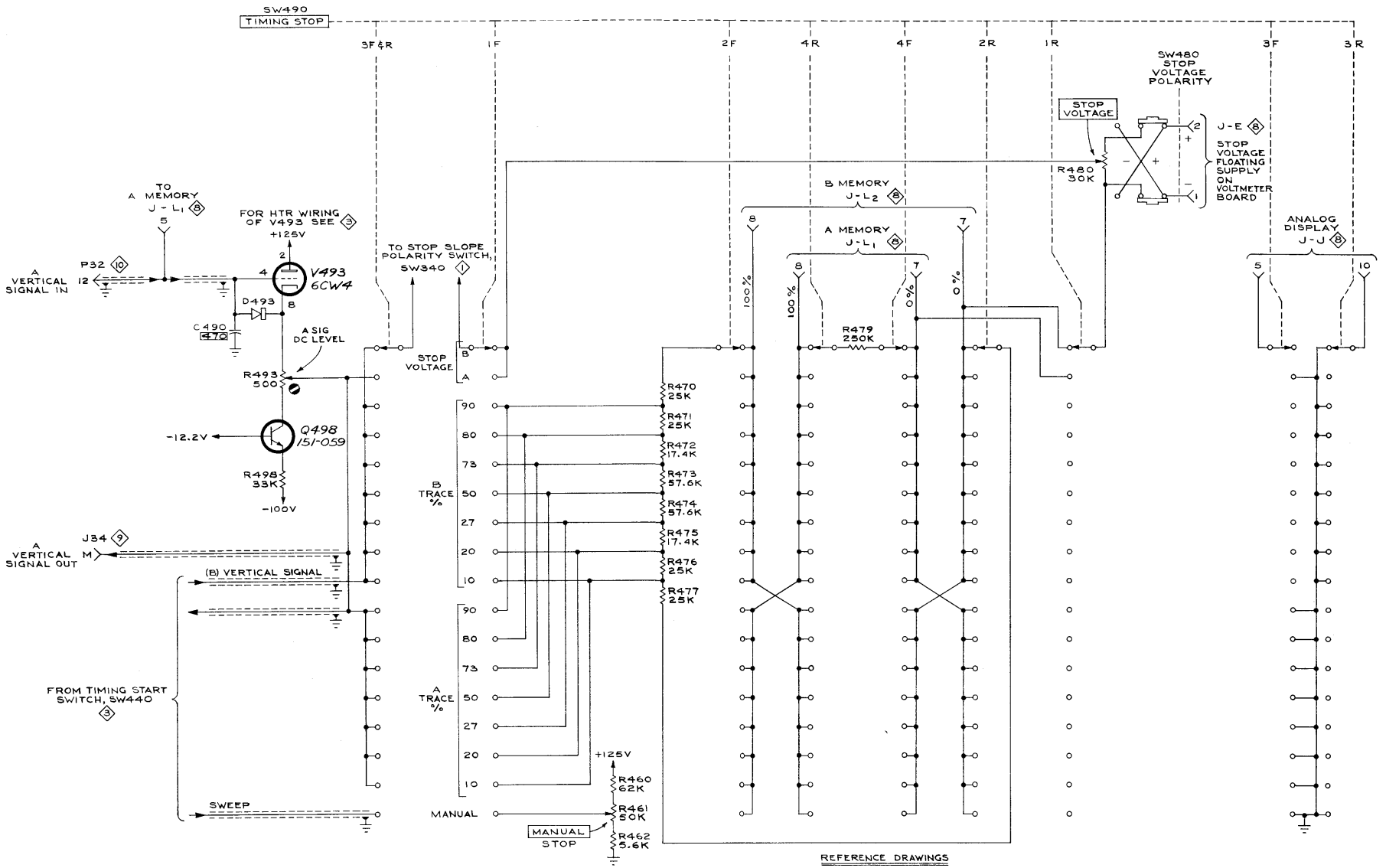

REFERENCE DRAWINGS

1 MODE SWITCH

3 TIMING START SWITCHING

8 PLUG-IN CIRCUIT BOARD CONNECTORS

9 EXTERNAL READOUT & PROGRAMMING CONNECTORS

10 CONNECTORS TO INDICATOR UNIT

SEE PARTS LIST FOR EARLIER VALUES AND S/N CHANGES OF PARTS MARKED WITH BLUE OUTLINE

TYPE 6R1

A

MRH
563

TIMING STOP SWITCHING

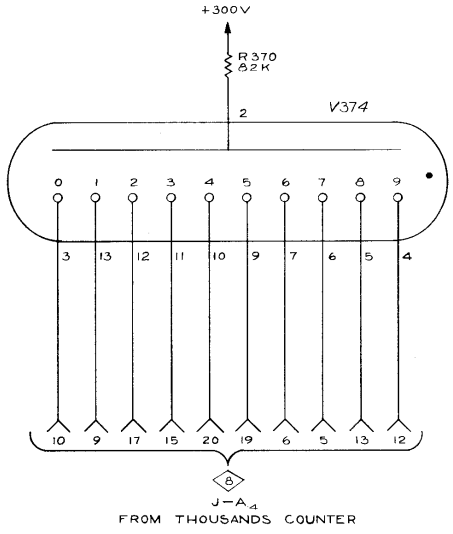

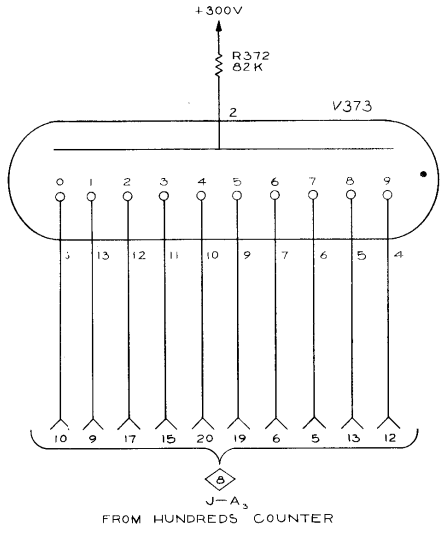

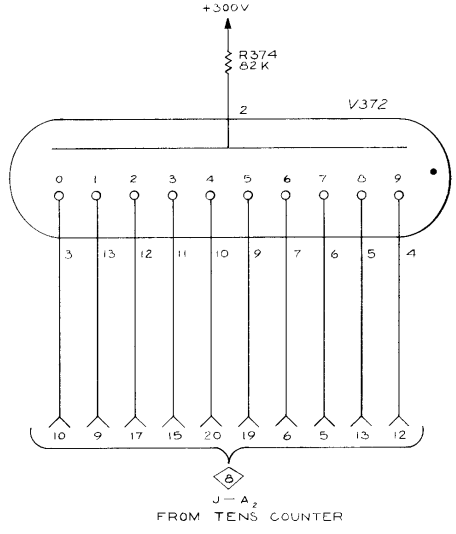

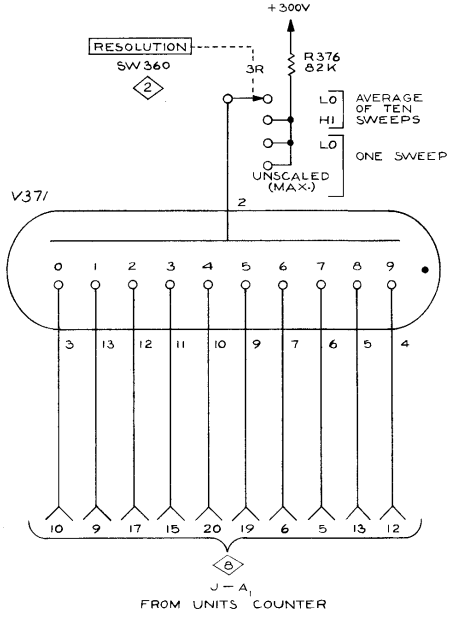

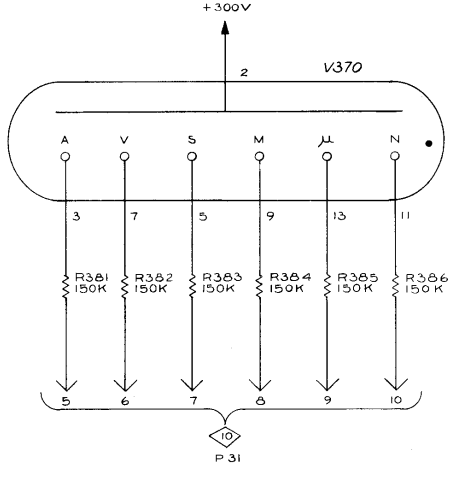

REFERENCE DRAWINGS

- 2 RESOLUTION SWITCH
- 8 PLUG-IN CIRCUIT BOARD CONNECTORS
- 10 CONNECTORS TO INDICATOR UNIT

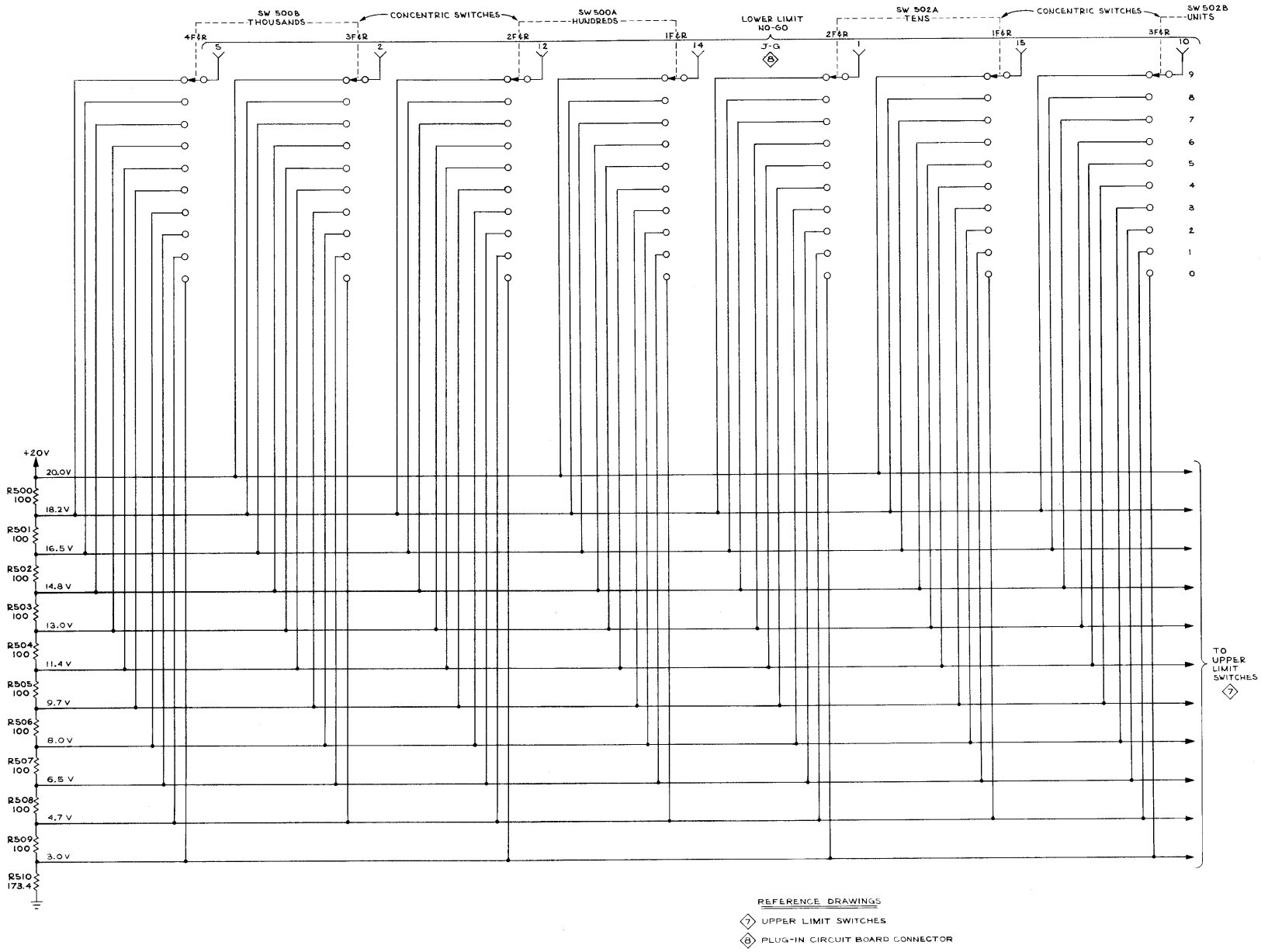

REFERENCE DRAWINGS

7 UPPER LIMIT SWITCHES

8 PLUG-IN CIRCUIT BOARD CONNECTOR

UN
563

TYPE 6R1

A

LOWER LIMIT SWITCHES

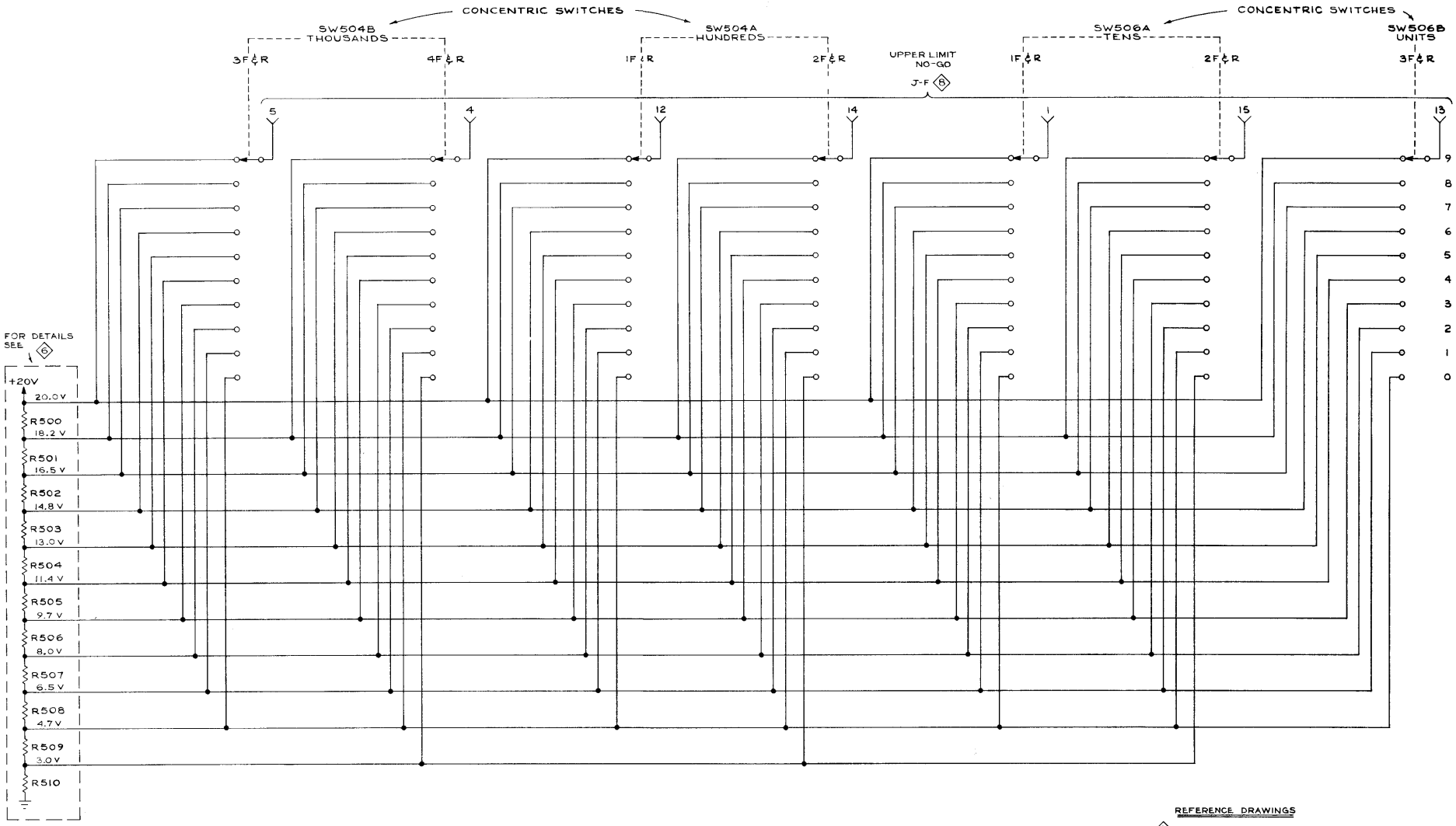

REFERENCE DRAWINGS

6 LOWER LIMIT SWITCHES

8 PLUG-IN CIRCUIT BOARD CONNECTORS

MRH
563

TYPE 6R1

A

UPPER LIMIT SWITCHES

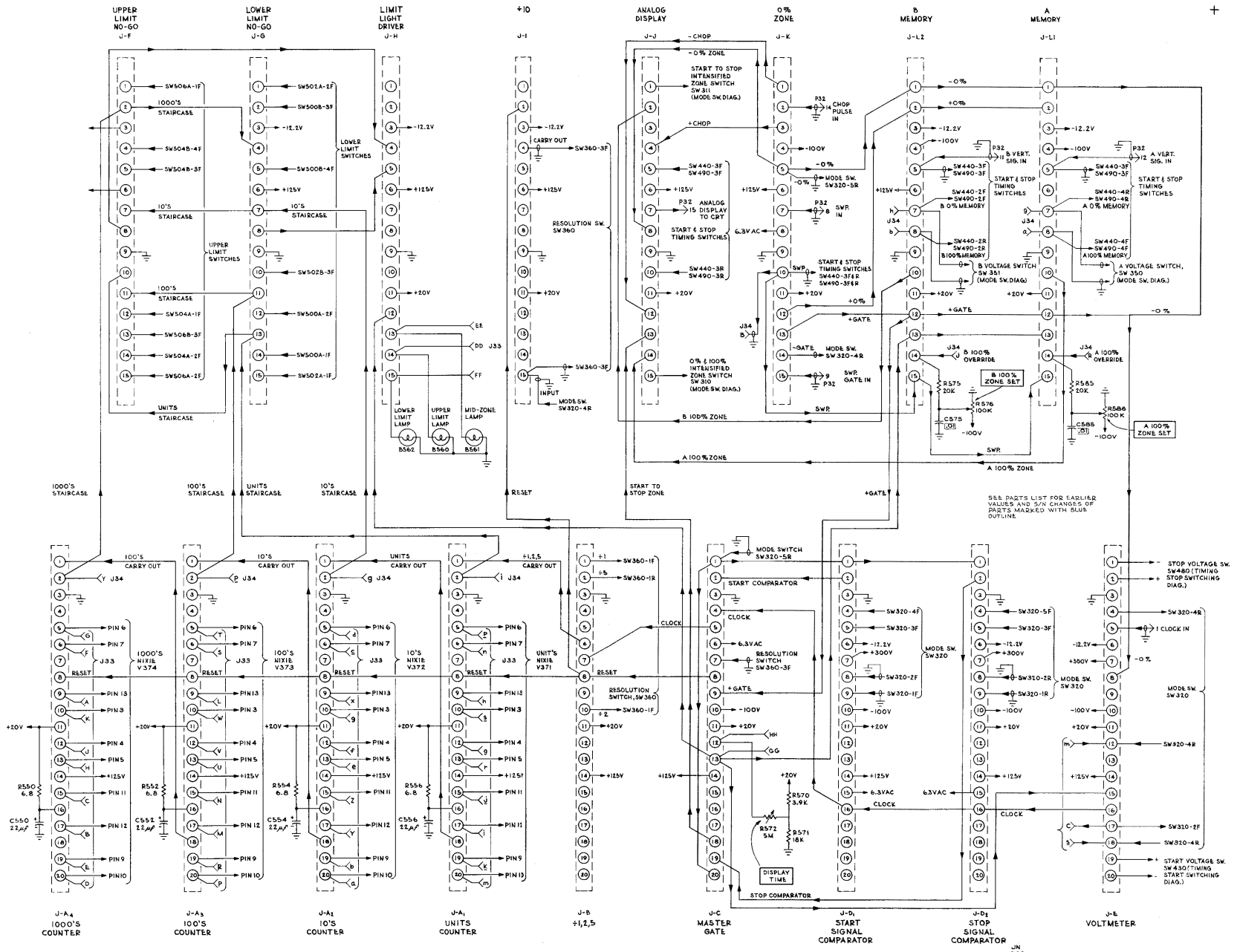

TYPE 6R1

A

JN 563

PLUG-IN CIRCUIT BOARD CONNECTORS

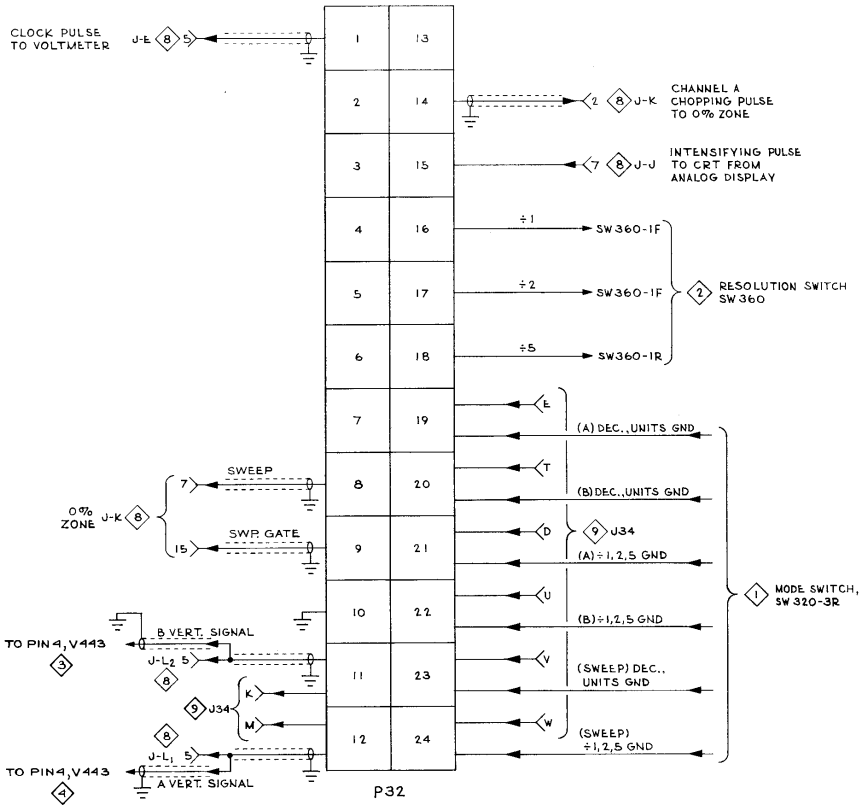

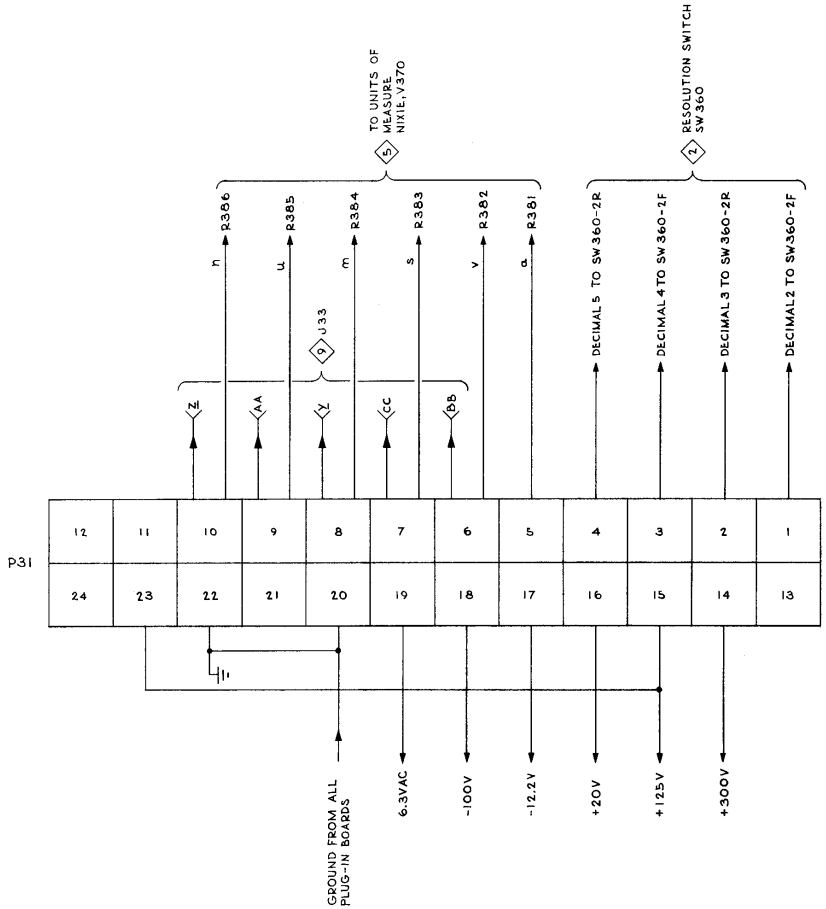

REFERENCE DRAWINGS:

1. MODE SWITCH
2. RESOLUTION SWITCH
3. TIMING START SWITCHING
5. READOUT TUBES
8. PLUG-IN CIRCUIT BOARD CONNECTORS
9. EXTERNAL READOUT & PROGRAMMING CONNECTORS
4. TIMING STOP SWITCHING

SEE PARTS LIST FOR EARLIER VALUES AND S/N CHANGES OF PARTS MARKED WITH BLUE OUTLINE

JN 563

CONNECTORS TO INDICATOR UNIT

TYPE 6R1

A

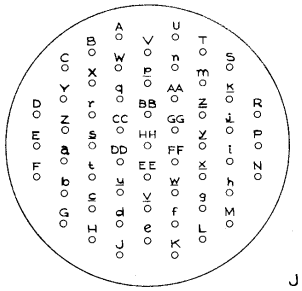

EXTERNAL READOUT — J33

A	1000'S - 1,	PIN 9,	J-A_4	8	
B	" 2,	" 17,	"		
C	" 3,	" 15,	"		
D	" 4,	" 20,	"		
E	" 5,	" 19,	"		
F	" 6,	" 6,	"		
G	" 7,	" 5,	"		
H	" 8,	" 13,	"		
J	" 9,	" 12,	"		
K	" 0,	" 10,	"		
L	100'S - 1,	PIN 9,	J-A_3	8	
M	" 2,	" 17,	"		
N	" 3,	" 15,	"		
P	" 4,	" 20,	"		
R	" 5,	" 19,	"		
S	" 6,	" 6,	"		
T	" 7,	" 5,	"		
U	" 8,	" 13,	"		
V	" 9,	" 12,	"		
W	" 0,	" 10,	"		
X	10'S - 1,	PIN 9,	J-A_2	8	
Y	" 2,	" 17,	"		
Z	" 3,	" 15,	"		
a	" 4,	" 20,	"		
b	" 5,	" 19,	"		
c	" 6,	" 6,	"		
d	" 7,	" 5,	"		
e	" 8,	" 13,	"		
f	10'S - 9,	PIN 12,	J-A_2	8	
g	" 0	" 10,	"		
h	1'S - 1,	PIN 9,	J-A_1	8	
i	" 2,	" 17,	"		
j	" 3,	" 15,	"		
k	" 4,	" 20,	"		
m	" 5,	" 19,	"		
n	" 6,	" 6,	"		
p	" 7,	" 5,	"		
q	" 8,	" 13,	"		
r	" 9,	" 12,	"		
s	" 0,	" 10,	"		
t	DECIMAL 1 FROM SW360-2F			2	
u	" 2	"	" 2F & R	2	
v	" 3	"	" 2R & F	2	
w	" 4	"	" 2R & F	2	
x	" 5	"	" 2R	2	
y	m FROM PIN 8, P31			10	
z	n "	" 10,	"		
AA	u "	" 9,	"		
BB	v "	" 6,	"		
CC	s "	" 7,	"		
DD	NO-GO UPPER LIMIT FROM PIN 14, J-H			8	
EE	" MID-ZONE	"	" 13, "		
FF	" LOWER LIMIT	"	" 15, "		
GG	PRINT COMMAND FROM PIN 13, J-C			8	
HH	DISPLAY TIME FROM PIN 12, J-C			8	

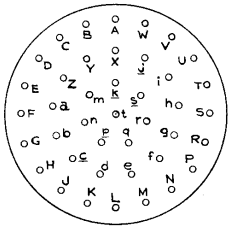

EXTERNAL PROGRAMMING — J34

A	GROUND	
B	SWEEP OUT FROM PIN 10, J-K	8
C	VOLTMETER RAMP FROM PIN 17, J-E	8
D	A VERT. ÷1,2,5 GND TO PIN 21, P32	10
E	A VERT. DEC., UNITS GND TO PIN 19, P32	10
F	-STOP COMPARATOR TO SW320-1R	1
G	+20V	
H	-START COMPARATOR TO SW320-1R	1
J	B 100% OVERRIDE TO PIN 14, J-L_2	8
K	B SIGNAL FROM START, SW440-3F & R	3
L	DEC., UNITS RETURN FROM SW320-3R	1
M	A SIGNAL FROM STOP SW490-3F & R	4
N	÷1,2,5 RETURN FROM SW320-3R	1
P	+ START COMPARATOR TO SW320-2F	1
R	A 100% OVERRIDE TO PIN 14, J-L_1	8
S	+ STOP COMPARATOR TO SW320-2R	1
T	B VERT. DEC., UNITS GND TO PIN 20, P32	10
U	B VERT. ÷1,2,5 GND TO PIN 22, P32	10
V	HORIZ. DEC., UNITS GND TO PIN 23, P32	10
W	HORIZ. ÷1,2,5 GND TO PIN 24, P32	10
X	SPARE	
Y	1000'S STAIRCASE FROM PIN 2, J-A_4	8
Z	SPARE	
a	100% A MEMORY FROM PIN 8, J-L_1	8
b	100% B MEMORY FROM PIN 8, J-L_2	8
c	1ST START SLOPE TO SW320-4F	1
d	2ND START SLOPE TO SW320-3F	1
e	1ST STOP SLOPE TO SW320-5F	1
f	2ND STOP SLOPE TO SW320-3F	1
g	0% A MEMORY FROM PIN 7, J-L_1	8
h	0% B MEMORY FROM PIN 7, J-L_2	8
i	SPARE	
j	1'S STAIRCASE FROM PIN 2, J-A_1	8
k	SPARE	
m	TIME CLOCK TO PIN 12, J-E	8
n	SPARE	8
p	100'S STAIRCASE FROM PIN 2, J-A_3	8
q	10'S STAIRCASE FROM PIN 2, J-A_2	8
r	SPARE	
s	VOLTMETER OSC TO PIN 18, J-E	8
t	VOLTMETER OSC, TIME CLOCK RETURN FROM SW320-4R	1

REFERENCE DRAWINGS
- 3 TIMING START SWITCHING
- 4 TIMING STOP SWITCHING
- 1 MODE SWITCH
- 2 RESOLUTION SWITCH
- 8 PLUG-IN CIRCUIT BOARD CONNECTORS
- 10 CONNECTOR TO INDICATOR UNIT

MRH 563

EXTERNAL READOUT & PROGRAMMING CONNECTORS

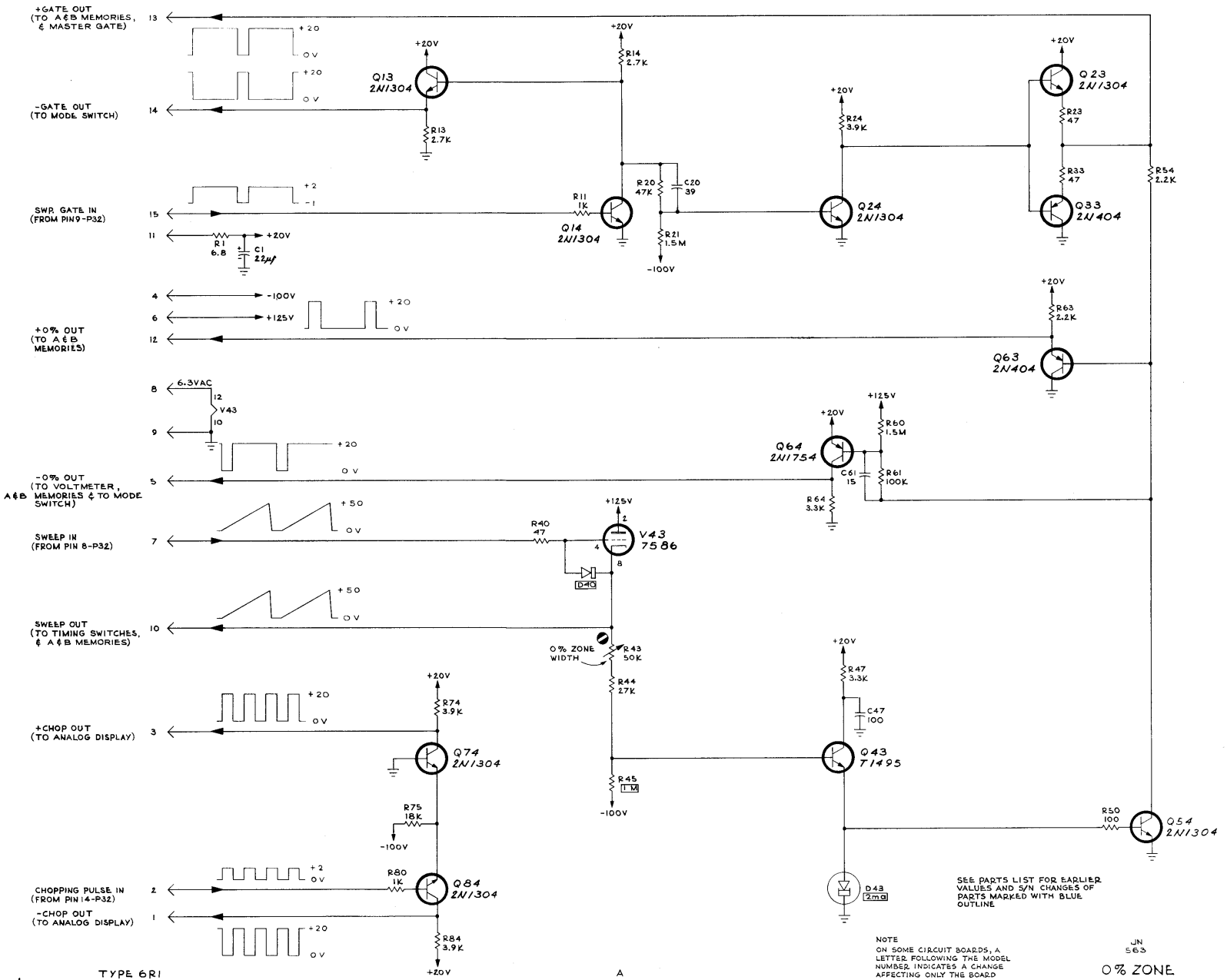
+GATE OUT (TO A&B MEMORIES, & MASTER GATE)
-GATE OUT (TO MODE SWITCH)
SWP. GATE IN (FROM PIN9-P32)
+0% OUT (TO A&B MEMORIES)
-0% OUT (TO VOLTMETER, A&B MEMORIES & TO MODE SWITCH)
SWEEP IN (FROM PIN 8-P32)
SWEEP OUT (TO TIMING SWITCHES, & A&B MEMORIES)
+CHOP OUT (TO ANALOG DISPLAY)
CHOPPING PULSE IN (FROM PIN 14-P32)
-CHOP OUT (TO ANALOG DISPLAY)
Q13 2N1304
Q14 2N1304
Q23 2N1304
Q24 2N1304
Q33 2N404
Q63 2N404
Q64 2N1754
V43 7586
Q74 2N1304
Q84 2N1304
Q43 T1495
Q54 2N1304
D43 2ma
0% ZONE WIDTH
SEE PARTS LIST FOR EARLIER VALUES AND S/N CHANGES OF PARTS MARKED WITH BLUE OUTLINE
NOTE
ON SOME CIRCUIT BOARDS, A LETTER FOLLOWING THE MODEL NUMBER INDICATES A CHANGE AFFECTING ONLY THE BOARD DESIGNATED BY THIS LETTER.
JN 563
0% ZONE
SERIES K MODELS 1,2,3,4
TYPE 6R1
A

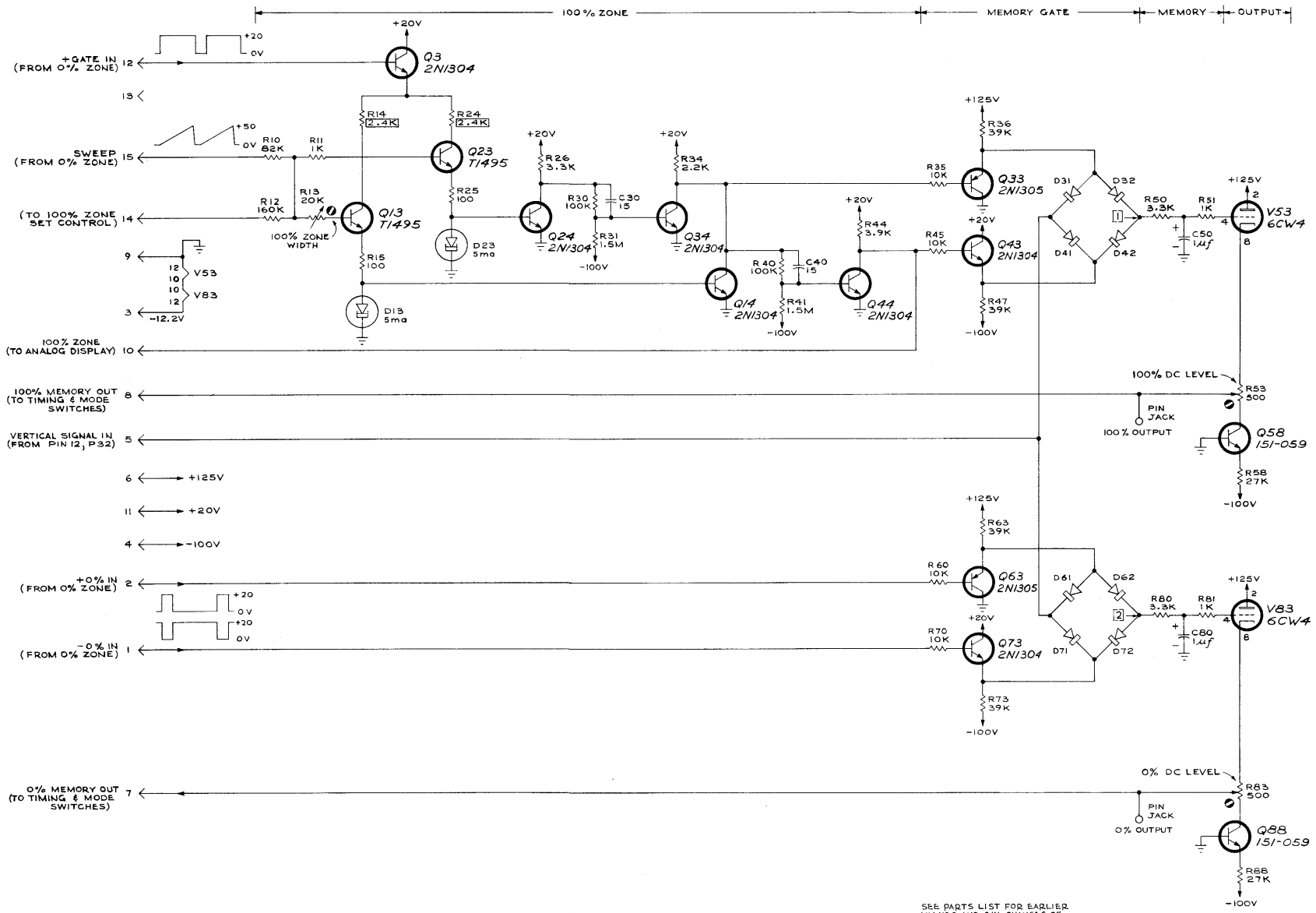

SEE PARTS LIST FOR EARLIER VALUES AND S/N CHANGES OF PARTS MARKED WITH BLUE OUTLINE

NOTE
ON SOME CIRCUIT BOARDS, A LETTER FOLLOWING THE MODEL NUMBER INDICATES A CHANGE AFFECTING ONLY THE BOARD DESIGNATED BY THIS LETTER.

TYPE 6R1

A

MRH 563

MEMORY

SERIES L MODELS 1,2,3,4

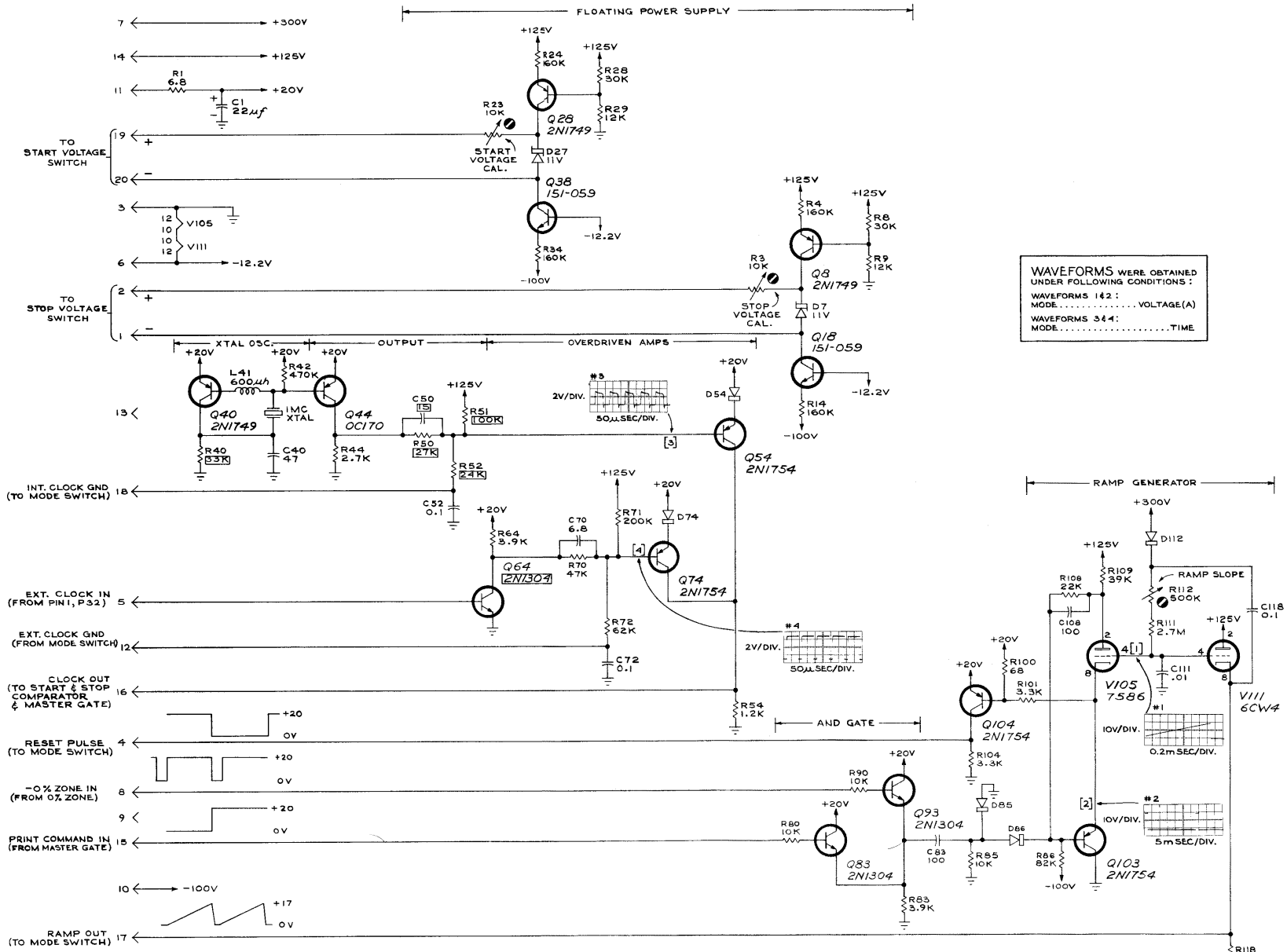

WAVEFORMS WERE OBTAINED UNDER FOLLOWING CONDITIONS:

WAVEFORMS 1&2: MODE.....VOLTAGE(A)

WAVEFORMS 3&4: MODE.....TIME

SEE PARTS LIST FOR EARLIER VALUES AND S/N CHANGES OF PARTS MARKED WITH BLUE OUTLINE

NOTE
ON SOME CIRCUIT BOARDS, A LETTER FOLLOWING THE MODEL NUMBER INDICATES A CHANGE AFFECTING ONLY THE BOARD DESIGNATED BY THIS LETTER.

TYPE 6R1

A

MRH 563

VOLTMETER
SERIES E MODEL 1&2

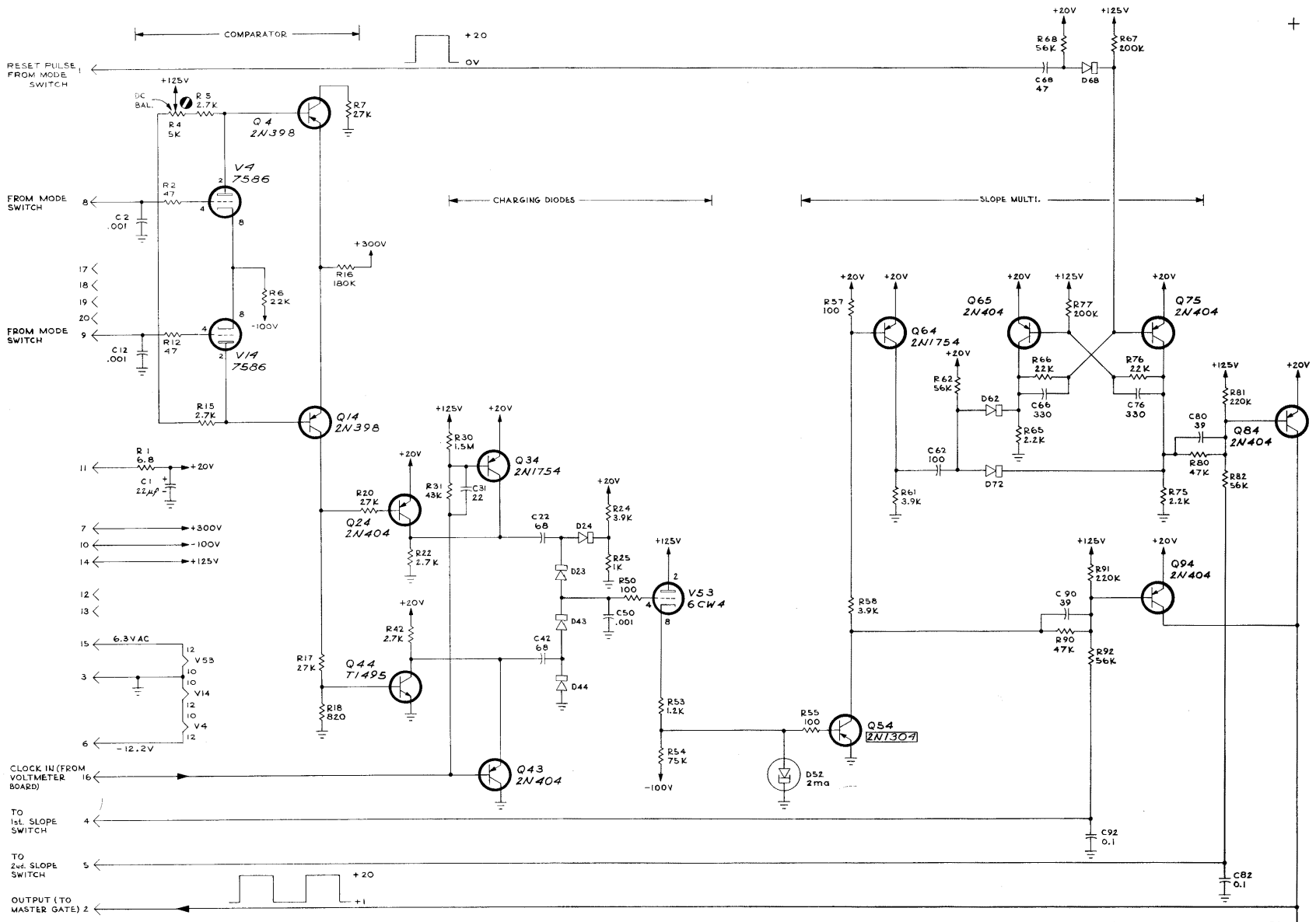

SEE PARTS LIST FOR EARLIER VALUES AND S/N CHANGES OF PARTS MARKED WITH BLUE OUTLINE

NOTE
ON SOME CIRCUIT BOARDS, A LETTER FOLLOWING THE MODEL NUMBER INDICATES A CHANGE AFFECTING ONLY THE BOARD DESIGNATED BY THIS LETTER.

JN 563

SIGNAL COMPARATOR

SERIES D MODELS 1&2

TYPE 6R1

A

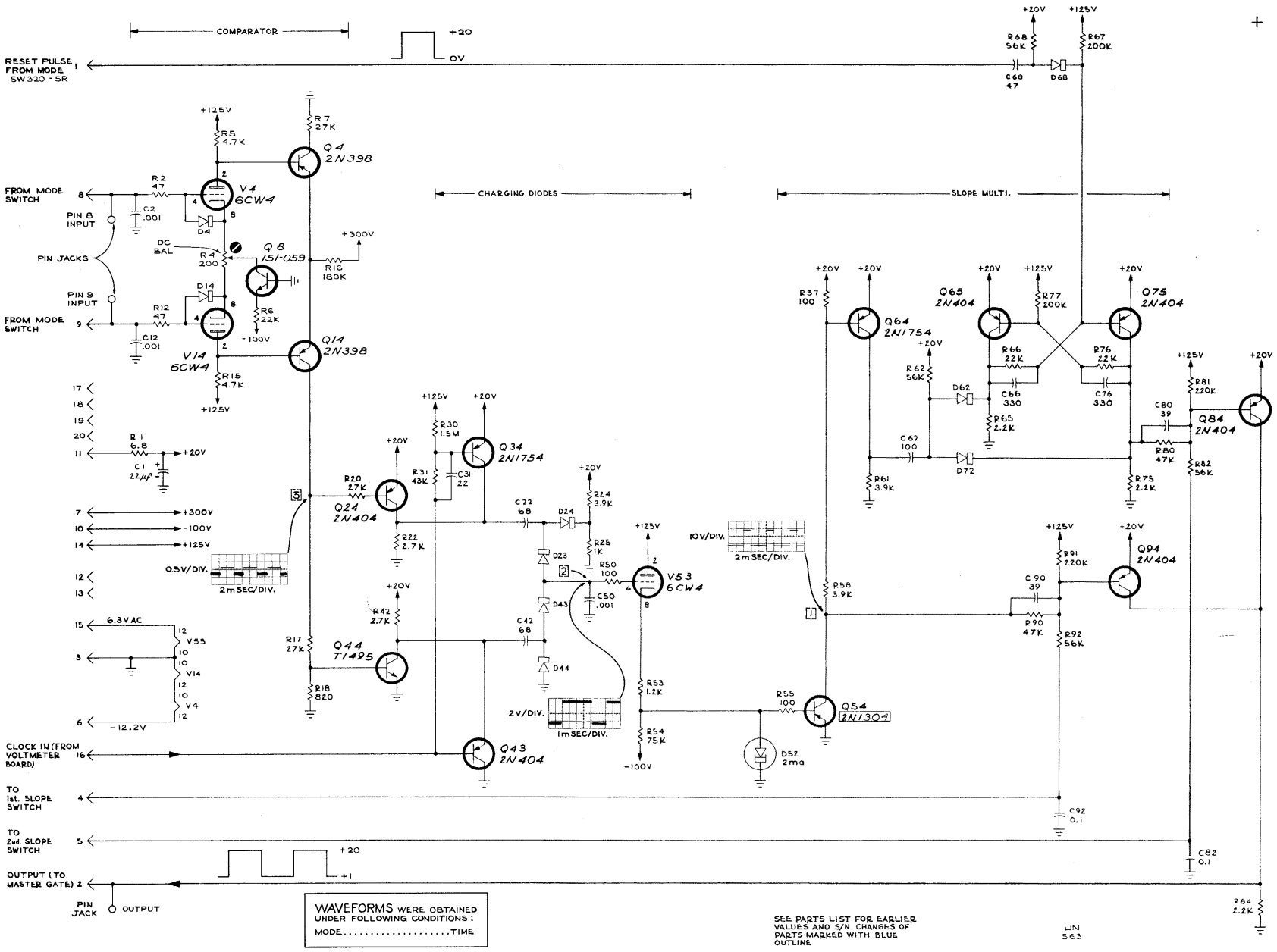

WAVEFORMS WERE OBTAINED UNDER FOLLOWING CONDITIONS:
MODE.....TIME

SEE PARTS LIST FOR EARLIER VALUES AND S/N CHANGES OF PARTS MARKED WITH BLUE OUTLINE

NOTE
ON SOME CIRCUIT BOARDS, A LETTER FOLLOWING THE MODEL NUMBER INDICATES A CHANGE AFFECTING ONLY THE BOARD DESIGNATED BY THIS LETTER.

TYPE 6R1

A

UN 563

SIGNAL COMPARATOR
SERIES D MODEL 3

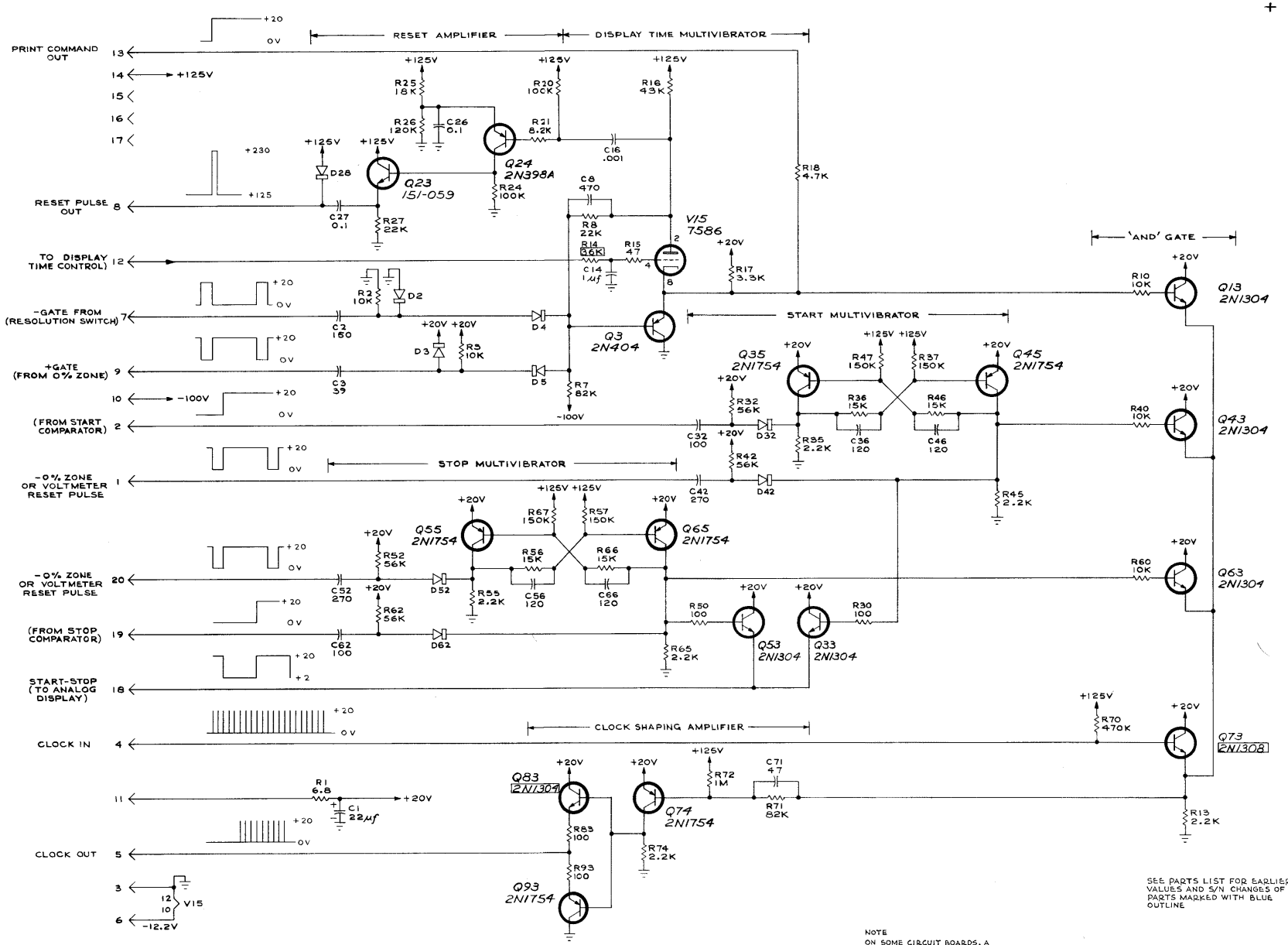

SEE PARTS LIST FOR EARLIER VALUES AND S/N CHANGES OF PARTS MARKED WITH BLUE OUTLINE

NOTE
ON SOME CIRCUIT BOARDS, A LETTER FOLLOWING THE MODEL NUMBER INDICATES A CHANGE AFFECTING ONLY THE BOARD DESIGNATED BY THIS LETTER.

TYPE 6R1

A

MRH
563

MASTER GATE

SERIES C MODELS 1 & 2

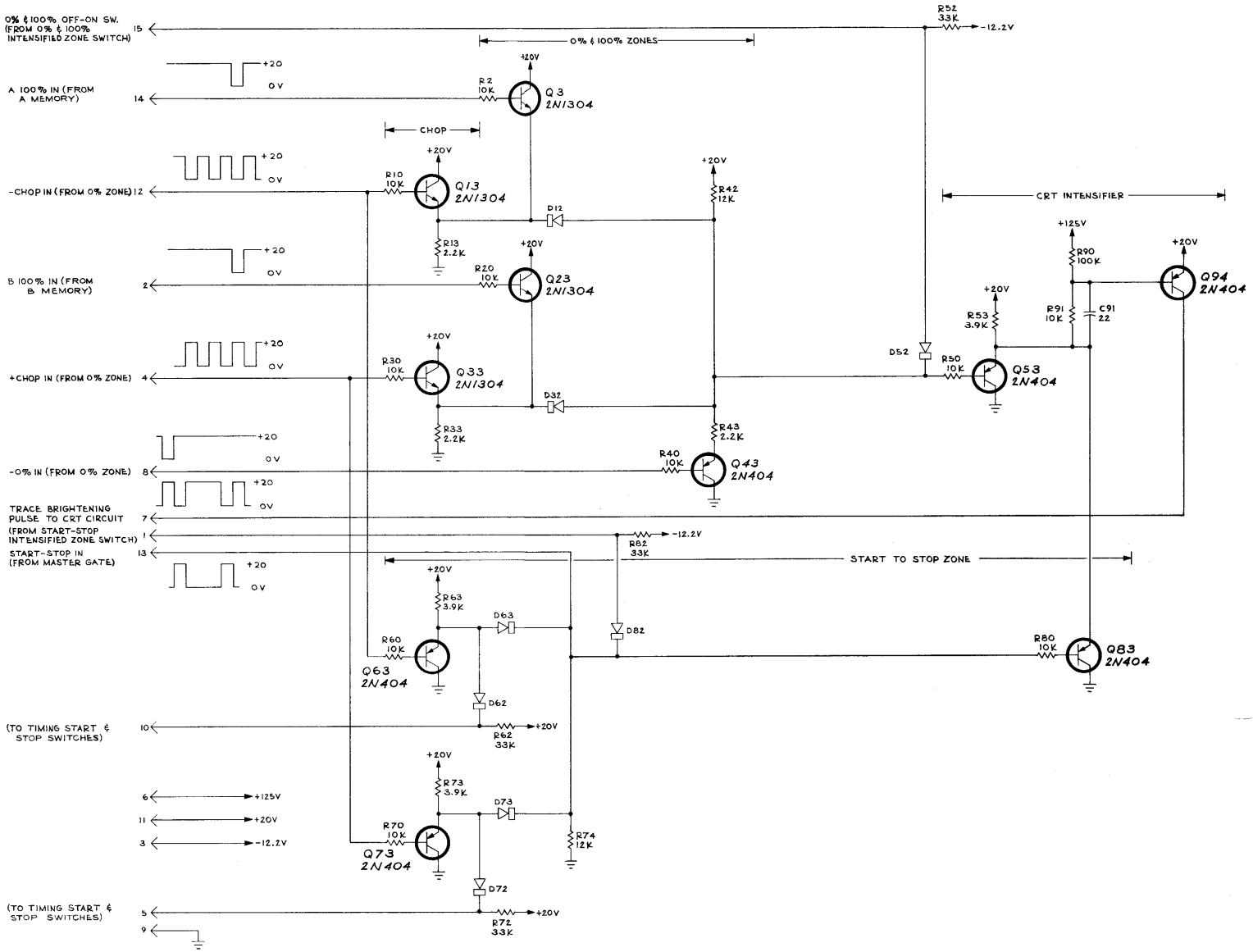

NOTE
ON SOME CIRCUIT BOARDS, A LETTER FOLLOWING THE MODEL NUMBER INDICATES A CHANGE AFFECTING ONLY THE BOARD DESIGNATED BY THIS LETTER.

TYPE 6R1

A

JN 563

ANALOG DISPLAY

SERIES J MODEL 1

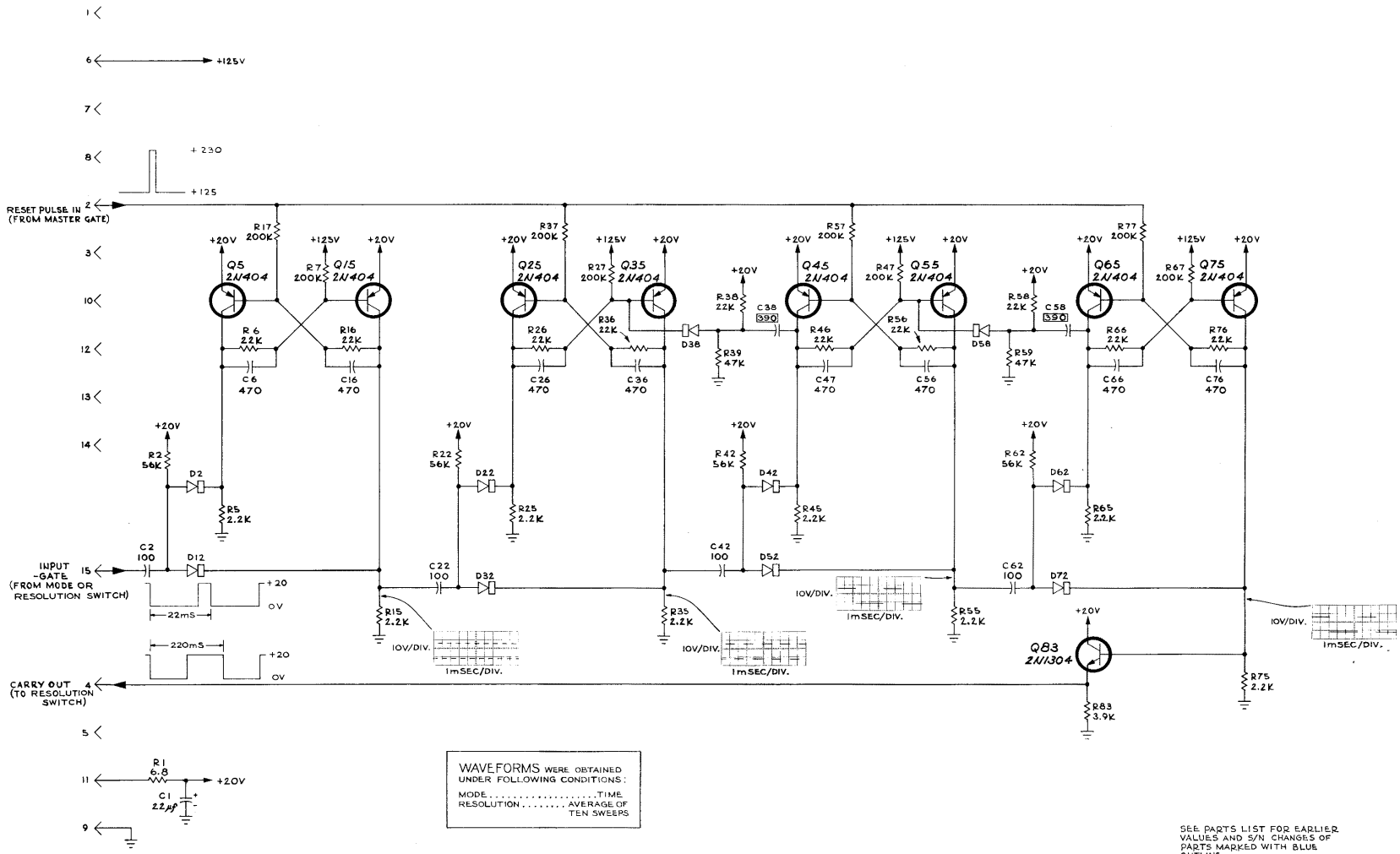

WAVEFORMS WERE OBTAINED UNDER FOLLOWING CONDITIONS:

MODE.....TIME
RESOLUTION.....AVERAGE OF TEN SWEEPS

SEE PARTS LIST FOR EARLIER VALUES AND S/N CHANGES OF PARTS MARKED WITH BLUE OUTLINE

NOTE
ON SOME CIRCUIT BOARDS, A LETTER FOLLOWING THE MODEL NUMBER INDICATES A CHANGE AFFECTING ONLY THE BOARD DESIGNATED BY THIS LETTER.

TYPE 6R1

A

JN 563
÷10
SERIES I MODELS 1 & 2

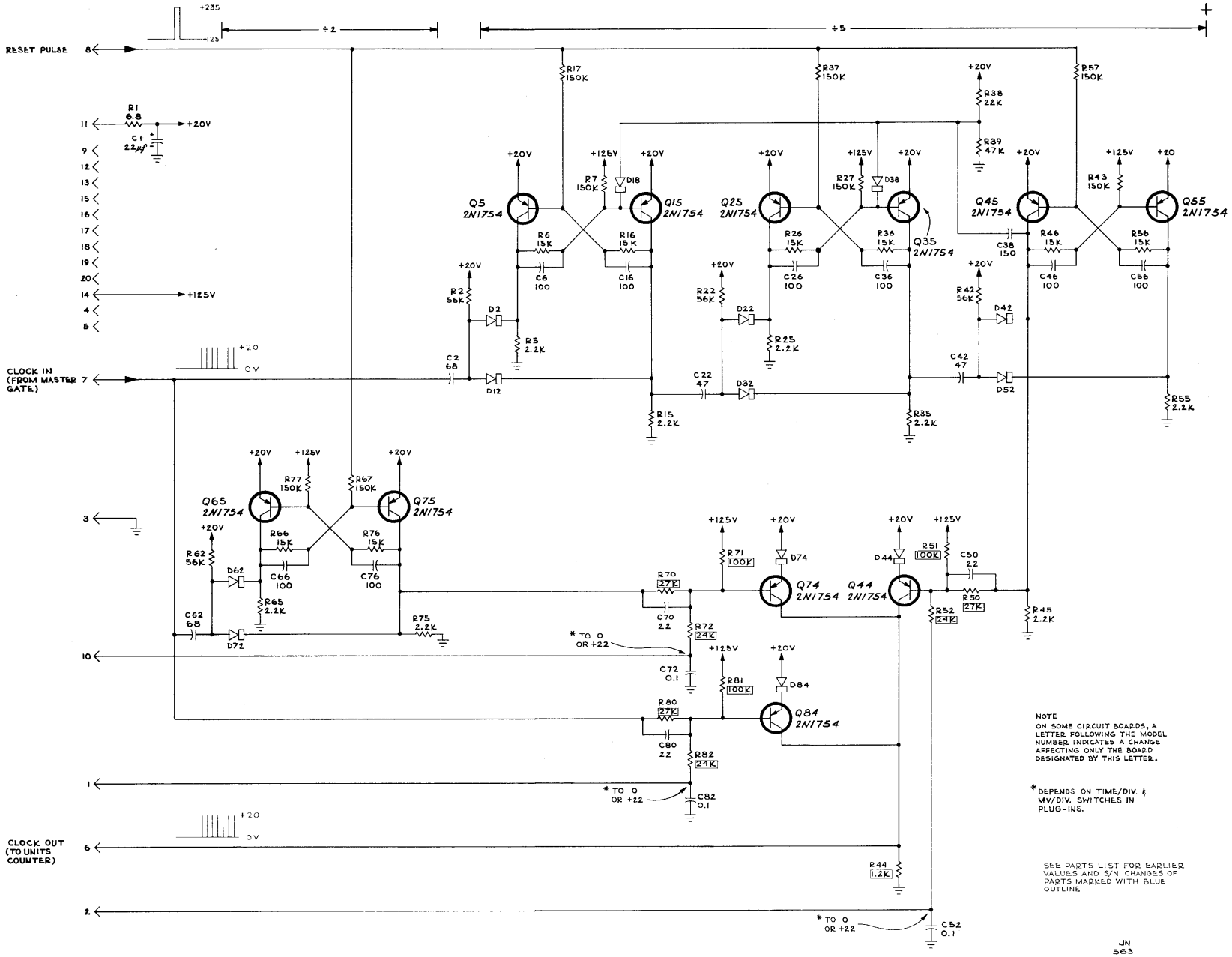
RESET PULSE
CLOCK IN (FROM MASTER GATE)
CLOCK OUT (TO UNITS COUNTER)
÷2
÷5
+235
+125
+20
0V
+20V
+125V
R1 6.8
C1 22μf
Q5 2N1754
Q15 2N1754
Q25 2N1754
Q35 2N1754
Q45 2N1754
Q55 2N1754
Q65 2N1754
Q75 2N1754
Q74 2N1754
Q44 2N1754
Q84 2N1754
R17 150K
R37 150K
R57 150K
R38 22K
R39 47K
R7 150K
R27 150K
R43 150K
R77 150K
R67 150K
D18
D38
R6 15K
R16 15K
R26 15K
R36 15K
R46 15K
R56 15K
R66 15K
R76 15K
C6 100
C16 100
C26 100
C36 100
C46 100
C56 100
C66 100
C76 100
C38 150
R2 56K
R22 56K
R42 56K
R62 56K
D2
D22
D42
D62
R5 2.2K
R25 2.2K
R55 2.2K
R65 2.2K
R75 2.2K
R15 2.2K
R35 2.2K
R45 2.2K
C2 68
C22 47
C42 47
C62 68
D12
D32
D52
D72
R71 100K
R51 100K
D74
D44
C50 2.2
R50 27K
R70 27K
R72 24K
R52 24K
C70 2.2
C72 0.1
R81 100K
D84
R80 27K
R82 24K
C80 22
C82 0.1
R44 1.2K
C52 0.1
* TO 0 OR +22
NOTE
ON SOME CIRCUIT BOARDS, A LETTER FOLLOWING THE MODEL NUMBER INDICATES A CHANGE AFFECTING ONLY THE BOARD DESIGNATED BY THIS LETTER.
* DEPENDS ON TIME/DIV. & MV/DIV. SWITCHES IN PLUG-INS.
SEE PARTS LIST FOR EARLIER VALUES AND S/N CHANGES OF PARTS MARKED WITH BLUE OUTLINE.
JN 563
÷1,2,5
SERIES B MODELS 1 & 2
TYPE 6R1
A

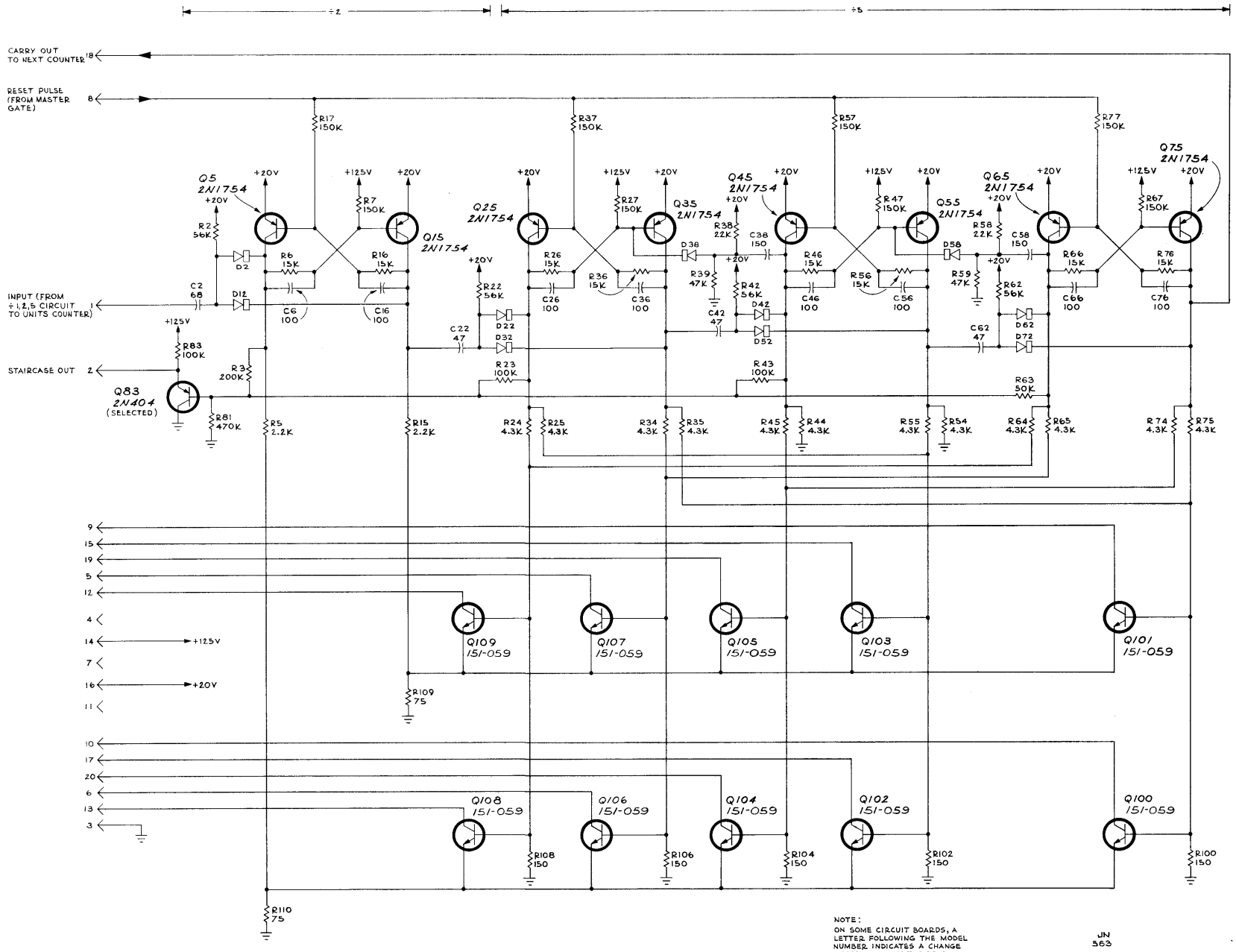

TYPE 6R1

A

NOTE:
ON SOME CIRCUIT BOARDS, A LETTER FOLLOWING THE MODEL NUMBER INDICATES A CHANGE AFFECTING ONLY THE BOARD DESIGNATED BY THIS LETTER.

JN 563

COUNTER

SERIES A MODELS 1&2

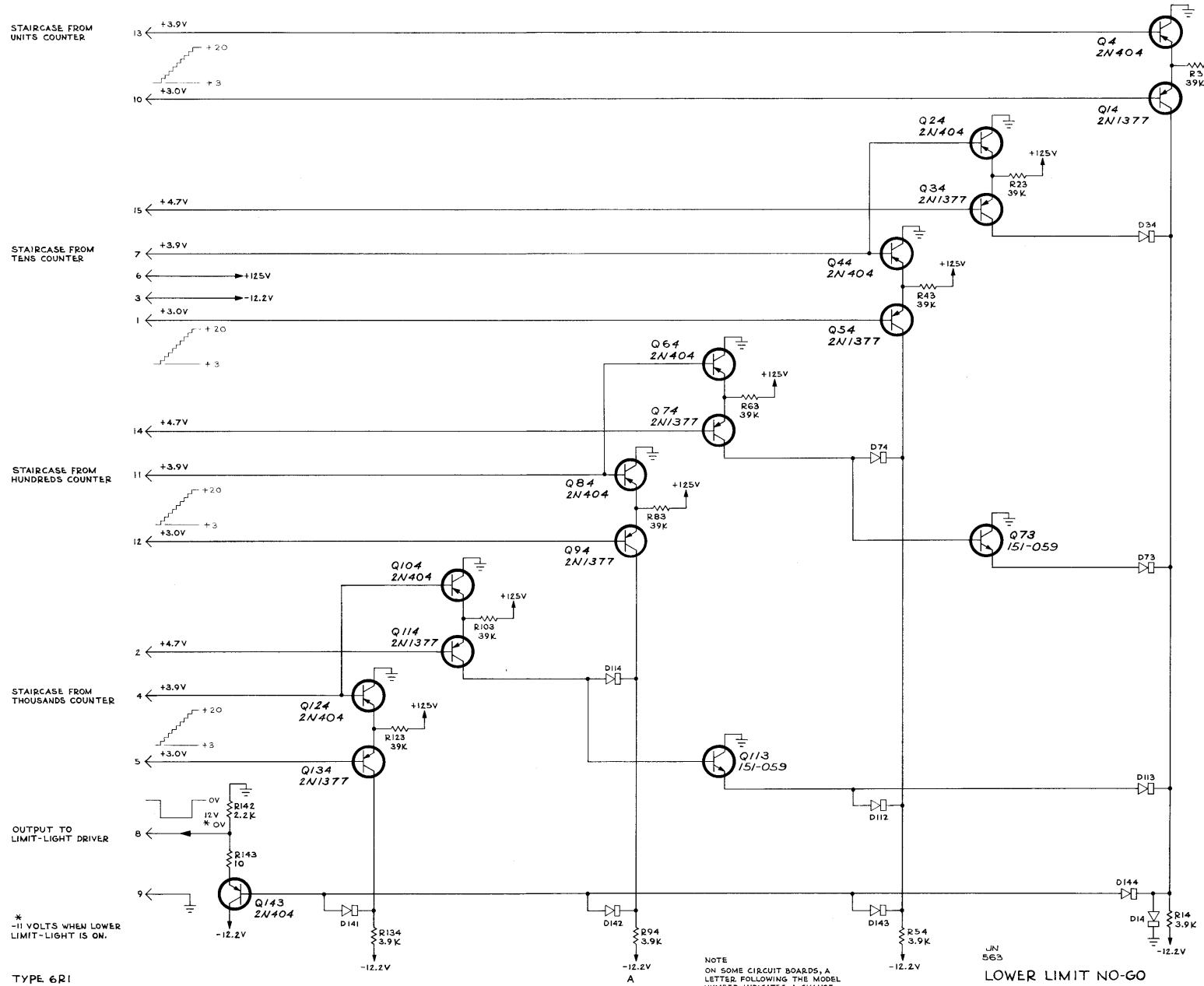
STAIRCASE FROM UNITS COUNTER
STAIRCASE FROM TENS COUNTER
STAIRCASE FROM HUNDREDS COUNTER
STAIRCASE FROM THOUSANDS COUNTER
OUTPUT TO LIMIT-LIGHT DRIVER
+3.9V
+3.0V
+4.7V
+125V
-12.2V
+20
+3
0V
12V
* 0V
Q4 2N404
Q14 2N1377
Q24 2N404
Q34 2N1377
Q44 2N404
Q54 2N1377
Q64 2N404
Q74 2N1377
Q84 2N404
Q94 2N1377
Q104 2N404
Q114 2N1377
Q124 2N404
Q134 2N1377
Q143 2N404
Q73 151-059
Q113 151-059
R3 39K
R23 39K
R43 39K
R63 39K
R83 39K
R103 39K
R123 39K
R142 2.2K
R143 10
R134 3.9K
R94 3.9K
R54 3.9K
R14 3.9K
D34
D74
D73
D114
D113
D112
D144
D14
D141
D142
D143
* -11 VOLTS WHEN LOWER LIMIT-LIGHT IS ON.
TYPE 6R1
NOTE
ON SOME CIRCUIT BOARDS, A LETTER FOLLOWING THE MODEL NUMBER INDICATES A CHANGE AFFECTING ONLY THE BOARD DESIGNATED BY THIS LETTER.
A
JN 563
LOWER LIMIT NO-GO
SERIES G MODEL 1

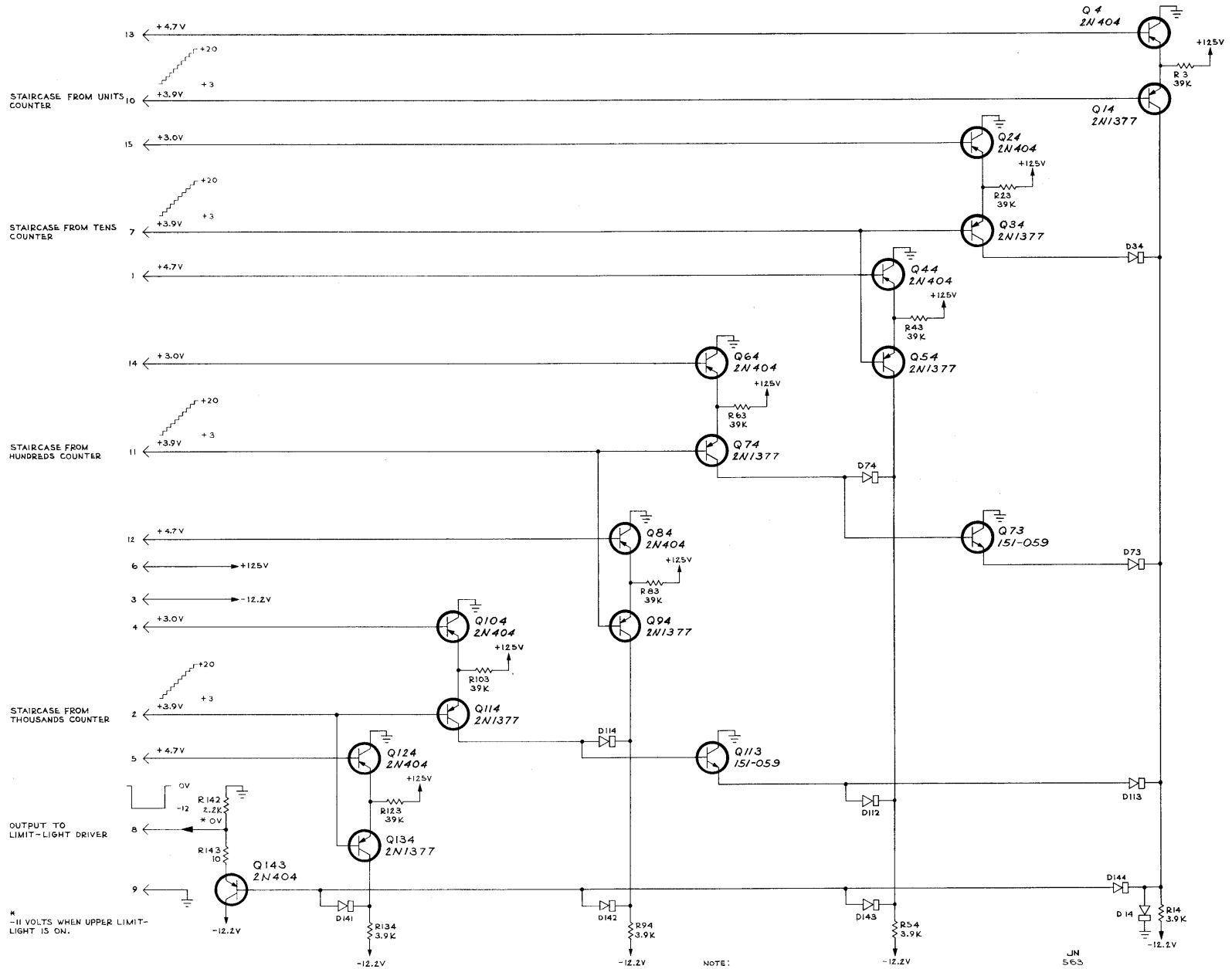
STAIRCASE FROM UNITS COUNTER
STAIRCASE FROM TENS COUNTER
STAIRCASE FROM HUNDREDS COUNTER
STAIRCASE FROM THOUSANDS COUNTER
OUTPUT TO LIMIT-LIGHT DRIVER
+4.7V
+3.9V
+3.0V
+20
+3
+125V
-12.2V
0V
-12
* 0V
Q4 2N404
Q14 2N1377
Q24 2N404
Q34 2N1377
Q44 2N404
Q54 2N1377
Q64 2N404
Q74 2N1377
Q84 2N404
Q94 2N1377
Q104 2N404
Q114 2N1377
Q124 2N404
Q134 2N1377
Q143 2N404
Q73 151-059
Q113 151-059
R3 39K
R23 39K
R43 39K
R63 39K
R83 39K
R103 39K
R123 39K
R142 2.2K
R143 10
R134 3.9K
R94 3.9K
R54 3.9K
R14 3.9K
D34
D74
D73
D114
D113
D112
D141
D142
D143
D144
D14
* -11 VOLTS WHEN UPPER LIMIT-LIGHT IS ON.
TYPE 6R1
A
NOTE:
ON SOME CIRCUIT BOARDS, A LETTER FOLLOWING THE MODEL NUMBER INDICATES A CHANGE AFFECTING ONLY THE BOARD DESIGNATED BY THIS LETTER.
JN 563
UPPER LIMIT NO-GO
SERIES F MODEL I

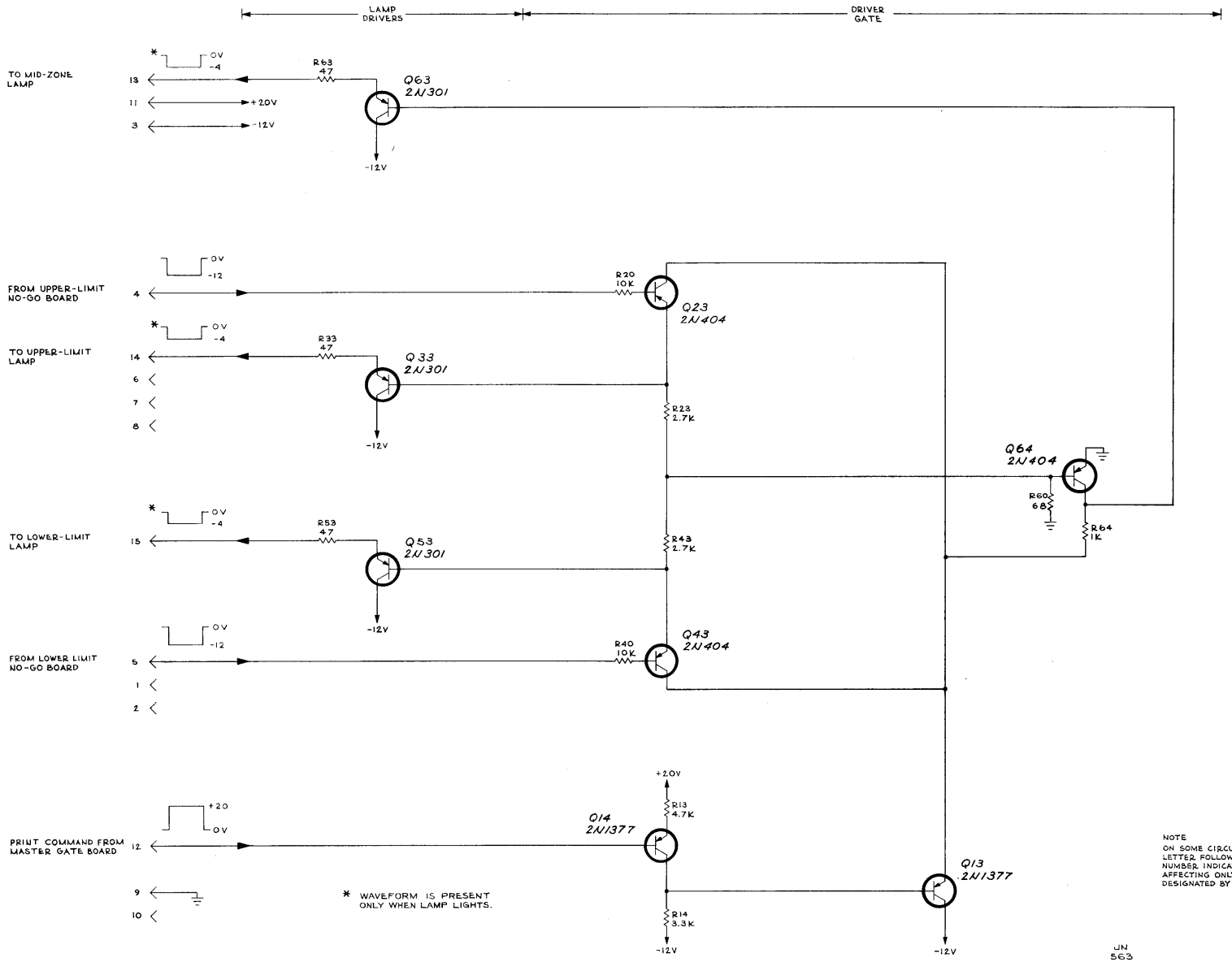

NOTE
ON SOME CIRCUIT BOARDS, A LETTER FOLLOWING THE MODEL NUMBER INDICATES A CHANGE AFFECTING ONLY THE BOARD DESIGNATED BY THIS LETTER.

TYPE 6R1

A

JN 563

LIMIT LIGHT DRIVER

SERIES H MODEL 1