TEK INSTRUCTION MANUAL

Part No. 070-8046-00
Product Group 2M

RF162 DOWN CONVERTER

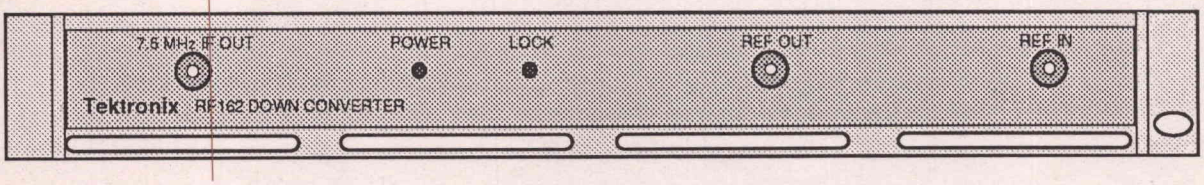

July 1990

Tektronix®
COMMITTED TO EXCELLENCE

Tektronix Inc.
Digital Signal Processing - MS 38-386
P.O. Box 500
Beaverton, OR. 97077

CONTENTS

INTRODUCTION

The Tektronix RF162 Down Converter is a rack-mounted instrument that is used as part of a system intended to extend the real time analysis capability of the Tektronix 3052 Digital Spectrum Analyzer to the frequency range of rf and microwave spectrum analyzers. The RF162 down converts a 21.4 or 321.4 MHz IF to a 7.5 MHz IF that has a 5 MHz bandwidth.

The RF162 does not have operating controls, nor does it operate under software control.

Figure 1 shows a typical system consisting of a spectrum analyzer that is the receiver, an RF162 that down converts the receiver's IF to a 7.5 MHz IF, and a 3052 that performs signal analysis and is also a controller for the Spectrum Analyzer.

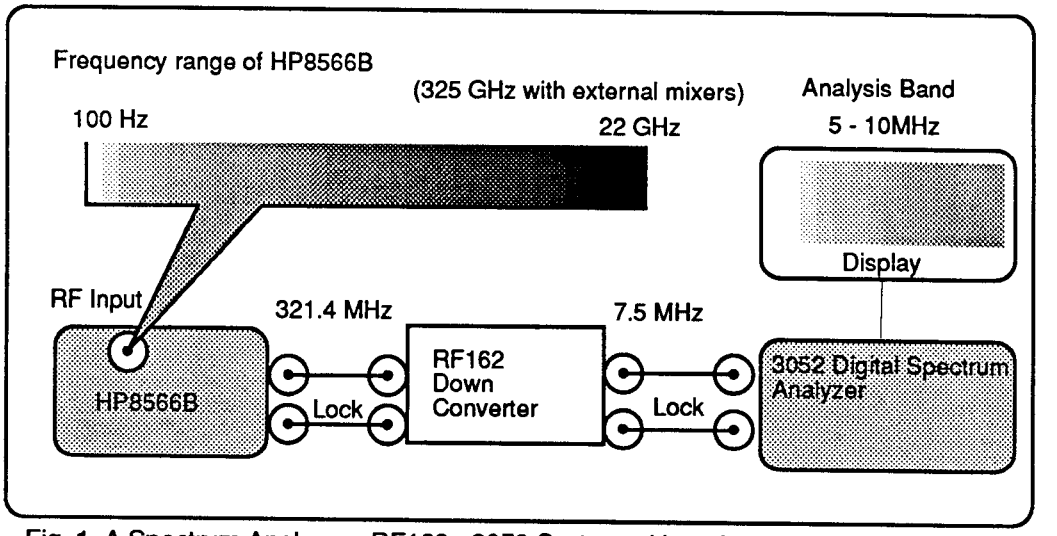

Fig. 1, A Spectrum Analyzer - RF162 - 3052 System with software and GPIB.

RF162 SPECIFICATIONS

SPECIFICATION DEFINITIONS

Electrical specifications for the RF162 are described under the following headings:

Characteristic - Is the attribute or property of the RF162 that is defined and specified.

Performance Requirement - This is a listing of requirements in quantitative terms and limit form that the RF162's electrical characteristic must satisfy. These requirements apply after a thirty minute warm-up.

Supplemental Information - This information qualifies a characteristic, its performance requirement, or describes performance that is unnecessary or impractical to verify.

Physical and other non-electrical specifications are described under Characteristic and Description headings. They do not have Performance Requirements.

TABLE 1 ELECTRICAL CHARACTERISTICS

Characteristics	Performance Requirement	Supplemental Information
Input IF Signals		IF from Receiver
Standard		21.4 MHz
Option 03		321.4 MHz
Optimum Input Power		
Standard		-36 dBm
Option 03		-30 dBm
Maximum Input level without damage:	+20 dBm	
7.5 MHz IF Out	5 to 10 MHz Frequency Band	Center Frequency is 7.5 MHz.
Standard	-20dB ± 4dB	With -36 dB in
Option 03	-20dB ± 4dB	With -30 dB in
Flatness	Less than 1 dB Peak to Peak across the 5 - 10 MHz range .	This does not include the flatness characteristic of the receiver.
Maximum Reverse Power	+22 dBm	
Inter-modulation Distortion		
Standard	Lower than -70 dBc.	For two input signals at -36dBm.
Option 03	Lower than -70 dBc.	For two input signals at -30 dBm.
Harmonic distortion	Lower than -70 dBc.	For a single tone at nominal input power.
Other single tone spurious responses	Lower than -80 dBc below any single input signal that is within the nominal input frequency range.	
Residual responses	Less than -110 dBm at the output.	Between 5 and 10 MHz with no input signal
Image Rejection		
Standard	Rejection is greater than 80 dB.	Image is between 33.9 and 38.9 MHz.
Option 03	Rejection is greater than 80 dB.	Image is between 276.1 and 281.1 MHz.
Noise figure		
Standard	14 dB, or less	
Option 03	20 dB, or less	
REFERENCE IN		
Frequency	10 MHz +/- 2 Parts per million	Required for RF162 operation.
Power	-10 to +20 dBm	or TTL
REFERENCE OUT		
Power	TTL	
Maximum Reverse	+20 dBm	

TABLE 2 CONNECTOR CHARACTERISTICS

Input Connectors	Description
SIGNAL IN	50 ohm BNC connector on rear panel.
Standard	Optimum input power is -36 dBm, connect to J100.
Option 03	Optimum input power is -30 dBm, connect to J101.
REF IN	Duplicate 50 ohm, BNC connectors, mounted on front and rear panels. They are direct coupled to each other and ac coupled to the RF162 circuitry. Apply one reference signal to one connector at a time.

Output Connectors	Description
7.5 MHz OUT	50 ohm BNC connector on front panel.
REF OUT	Duplicate 50 ohm, BNC connectors, mounted on front and rear panels. The signals at these connectors are buffered REF IN signals. The connectors are independently terminated in 50 ohms.

TABLE 3 POWER CHARACTERISTICS

Characteristics	Performance Requirement	Supplemental Information
Line Voltage Range		
115 Vac nominal	90 to 132 Vac	
230 Vac nominal	180 to 264 Vac	
Line Frequency Range	47 to 63 Hz	
Operating Power	25 Watts Maximum	
Operating Current		
115 Vac nominal	0.42 Amps Maximum	
230 Vac nominal	0.21 Amps Maximum	
Line Fuse		In fuse holder at instrument rear.
115 Vac nominal		2 A/125 V
230 Vac nominal		1 A/250 V Time Lag

TABLE 4 ENVIRONMENTAL CHARACTERISTICS

Characteristics	Description
Altitude	
Operating	20,000 ft. (within operating temperature range)
Non-operating	40,000 ft.
Temperature	
Operating	0° to 50 ° Celsius
Non-operating	-20° to +60° Celsius
Relative Humidity	
Operating	90%
Non-operating	95%
Shock	
Operating	50 G, 11 milli second, half-sine pulse.
Non-operating	50 G, 11 milli second, half-sine pulse.
Vibration Limit	
Operating	2 G. at 55Hz
Non-operating	2 G. at 55Hz
EMI	Meets FCC rules and regulations, part 15, subpart J, Class A. Meets requirements of VDE 0871, Class B, Radio Frequency Interference Suppression of Electrical Equipment and Systems.

TABLE 5 PHYSICAL CHARACTERISTICS

Characteristics	Description	
Dimensions		
Width	16.75 inches	425.5 mm
Height	1.75 inches	44.5 mm
Depth	20.75 inches	527.0 mm
Weight	10 lbs	4.5 kg

TABLE 6 SAFETY CHARACTERISTICS

Item	Description
UL	Listed under UL 1244, 2nd edition. Standard for Electrical and Electronic Measuring and Test Equipment.
CSA	Certified under CSA/CAN C22.2 No. 231. Electrical and Electronic Measuring and Test Equipment.
IEC 348	In compliance with IEC 348, Second Edition. Safety Standard for Electronic Measuring Apparatus.
ANSI/ISA S82	In compliance with ANSI/ISA-S82. Safety Standard for Electrical and Electronic Test, Measuring, Controlling and Related Equipment.

TABLE 7 ACCESSORIES

Type	Description
Standard	Instruction Manual Power Cord Fuse, 2 A , (for 115 Vac application) Fuse. 1A, Time lag, 159-0019-00, (for 230 Vac application) Cables, 50 ohm , 4 ea. Rack-mount hardware Packaging Kit, 655-4783-00

TABLE 8 OPTIONS

Number	Description
Option 03	Configures the RF162 for 321.4 MHz IF input operation. This option requires these circuit board changes. 1. Move the SIGNAL IN connector from J100 to the input of the 321.4 MHz bandpass filter. 2. Connect the output of the filter to J101. 3. Move a jumper strap to connect the bottom two connectors of J110.

SYSTEM OPERATING INSTRUCTIONS

INTRODUCTION

The RF162 is intended to be used as part of a system that includes a Spectrum Analyzer and a 3052. This section contains the system setup information.

The RF162 does not have operating controls nor does it operate under software control.

If the customer desires to use a programmable Spectrum Analyzer with the 3052 as a controller via GPIB, the 3052 must have Option 2 (GPIB, slave/controller) installed. For field installation of GPIB capability and the necessary software, call the

Digital Signal Processing Group
Product Support Supervisor
Tektronix, Inc.
(503) 627-3484

Ask for Field Installation Kit 3052 F02 and the Applied Software Product suited to your 3052 and Spectrum Analyzer.

SYSTEM SETUP

• Install the Spectrum Analyzer, RF162 , and 3052 in a suitable rack.

• Use minimum length 50 Ω BNC cables, and make the connections shown in Figure 1.

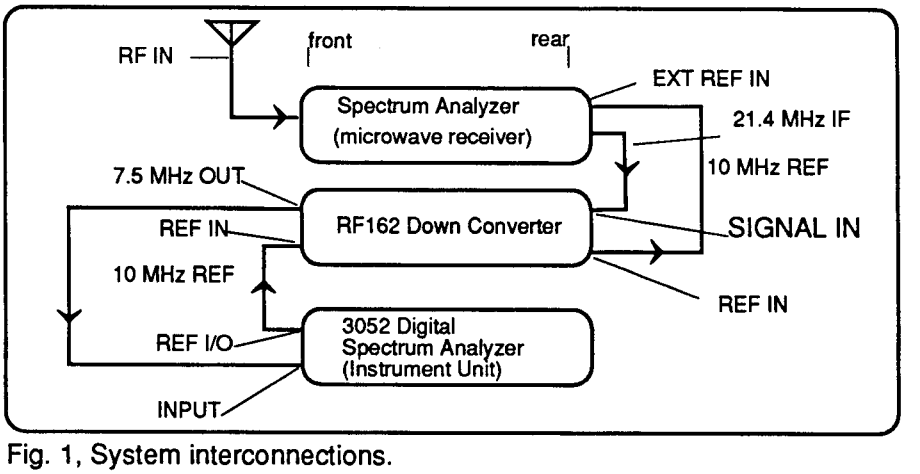

Fig. 1, System interconnections.

• Connect the Spectrum Analyzer rear panel, 21.4 MHz IF output, to the RF162 rear panel, SIGNAL IN.

• Connect the RF162 front panel 7.5 MHz IF OUT to the 3052 INPUT.

• Connect the RF162 front panel REF IN to the 3052 REF I/O.

• Connect the RF162 rear panel REF IN, to the Spectrum Analyzer rear panel, EXT REF IN.

The RF162 has two REF IN and two REF OUT connectors. One set of each is located on the front panel and the other set is located on the rear panel. The REF IN connectors are direct coupled to each other and ac coupled to the internal circuitry. The REF OUT connectors are separate buffered outputs of the reference input signal. See Appendix A.

CAUTION

Do not apply two reference signals to the RF162 at one time.

APPLY POWER

Set all system instrument POWER switches to ON.

Check: POWER indicators on all system instruments are lit.

FREQUENCY REFERENCE

A Frequency Reference is required for proper system and RF162 oscillator operation. The 3052 10 MHz Standard may be used as the reference. See **System Setup** and Figure 1.

When the 3052 10 MHz Standard is to be used as the System and the RF162 oscillator reference:

Execute the following Software utility from the 3052 keyboard.

INPUT	INT

NOTE

The double lines indicate a front panel key. The single lines represent a menu selection.

Check: The RF162 LOCK indicator will light when the oscillators are locked to the Reference Frequency.

SIGNAL PROCESSING

Apply the signal to be analyzed to the Spectrum Analyzer RF INPUT.

Refer to the Spectrum Analyzer's Operating Instructions and set the Peaking function as desired.

Set the Spectrum Analyzer's controls such as Span, Bandwidth, etc. as desired.

Refer to the 3052 Operating Instruction manual to process and analyze the signal.

EXTERNAL REFERENCE

As an alternative, a frequency source other than the 3052 10 MHz Standard may be used as the system reference;

To frequency lock the System to an external reference, modify the system setup shown in Figure 1 to a setup as shown in Figure 2.

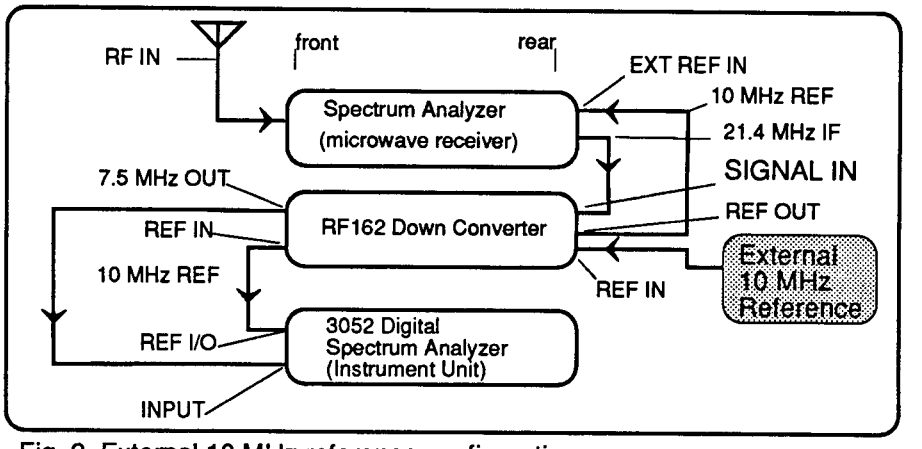

Fig. 2, External 10 MHz reference configuration.

Only these connections are changed from the Internal Reference setup (Figure 1).

- Connect the RF162 rear panel REF OUT to the Spectrum Analyzer rear panel EXT REF IN.
- Connect the External Reference to the RF162, rear panel, REF IN.
- Change the 3052 Reference Frequency In/Out configuration.

Execute the following Software utility from the 3052 keyboard.

INPUT	EXT	
	EXT REFERENCE	10MHZ

SERVICING SAFETY SUMMARY

FOR QUALIFIED SERVICE PERSONNEL ONLY

DO NOT SERVICE ALONE.	Do not perform internal service or adjustment of Monitor or Instrument Units of this product unless another person capable of rendering first aid and resuscitation is present.
DO NOT WEAR JEWELRY.	Remove jewelry prior to servicing. Rings, necklaces, and other metallic items could come into contact with dangerous voltages and currents.
USE CARE WHEN SERVICING THE INSTRUMENT WITH POWER ON.	Dangerous voltages exist at several points in the Monitor and Instrument Units. To avoid personal injury, do not touch exposed connections and components while power is on. Disconnect power before removing protective panels, soldering, or replacing components.
POWER SOURCE	The Monitor and Instrument Units are intended to operate from a power source that will not apply more that 250 volts rms between the supply conductors or between either supply conductor and ground
POWER CORDS	Use only the Power Cords specified for the Monitor and Instrument Units. these Power Cords have a protective ground conductor that is essential to safe operation.
FUSES	Use only the fuses specified on the plates located on the rear panels of the Monitor and Instrument Units.
DANGER FROM LOSS OF GROUND.	Upon loss of the protective ground connection, all accessible conductive parts (including knobs and controls that may appear to be insulated) can render an electric shock.

TERMS

IN THIS MANUAL	CAUTION	Statements identify conditions or practices that could result in damage to the equipment or other property.
	WARNING	Statements identify conditions or practices that could result in personal injury or loss of life.
AS MARKED ON EQUIPMENT	CAUTION	Indicates a personal injury hazard not immediately accessible as one reads the marking, or a hazard to property including the equipment itself.
	DANGER	Indicates a personal injury hazard immediately accessible as one reads the marking.

SYMBOLS

IN THIS MANUAL	⚠	This symbol indicates where caution information is found.
AS MARKED ON EQUIPMENT	ϟ	DANGER - High Voltage.
	⏚	Protective ground (earth) terminal.
	⚠	Attention - Refer to manual.
	ⓘ	Refer to manual.

SERVICE SECTION

GENERAL CIRCUIT DESCRIPTION

Overview

The RF162 circuitry consists of two oscillators, two mixers, a phaselock circuit for controlling the frequency of the oscillators and various amplifiers and filters for signal processing.

Signal Flow (Standard)

In Standard operation, the 21.4 MHz IF output of a Spectrum Analyzer or receiver is applied to J100. This signal is amplified and filtered then applied as the input to a mixer. The 21.4 MHz is mixed with the 28.9 MHz oscillator signal, creating a 7.5 MHz product. The product is amplified and filtered and connected via J425 to the front panel 7.5 MHz IF OUT connector.

Signal Flow (Option 03)

In Option 03 operation, the 321.4 MHz IF output of a Spectrum Analyzer or receiver is applied via the SIGNAL IN connector to a FILTER then to J101. The input signal is mixed with 300 MHz from an oscillator circuit to produce a 21.4 MHz This signal is then passed through the same circuitry that is used to process a Standard input. In this case the sum frequency is bypassed to ground through C101 and termination resistor R100. The difference energy is coupled through the bandpass filter made up of L100, L101, L200, L300 and associated capacitors. This filter passes 18.9 MHz to 23.9 MHz while blocking undesirable signals.

DETAILED CIRCUIT DESCRIPTION

Refer to the Schematic Diagram, page 1, at the back of this manual :

Input Connectors

In Standard configuration the SIGNAL IN BNC is connected to J100. In Option 03 configuration the SIGNAL IN BNC is connected to a Filter then to J101.

Amplifier

Q301, T300 and associated components make up an amplifier with a voltage gain of about 9 between pin 1 of T300 and TP300.

Emitter Follower

Q300 is an emitter follower that provides current gain and reverse impedance.

Image Rejection

The output of Q300 drives an image rejection filter made up of L400, L401, L301, L302, L350, and associated capacitors. This filter passes 18.9 MHz to 23.9 MHz while blocking 33.9 MHz to 38.9 MHz that would produce undesirable products in Mixer U325.

Second Mixer

The signal from the Image Rejection Filter is applied to the RF input of the Mixer U325. The input window of frequencies is mixed with 28.9 MHz, producing a window of sum frequencies centered at about 50.3 MHz and a 5 MHz wide difference window centered at 7.5 MHz.

Filter

The filter composed of C330, L325 and C427, blocks and shunts the sum frequencies to ground while passing the difference frequencies.

Amplifiers

The signal is voltage amplified by Q425 and current amplified by emitter follower Q426.

Output

SMB connector J425 is connected to the front panel 7.5 MHz IF OUT connector.

DETAILED CIRCUIT DESCRIPTION, continued:

100 MHz Oscillator

Q226 and associated components form a Colpitts oscillator that produces 100 MHz. L225 and related capacitors are a resonate circuit. Feed back is through C128, D125, L125 and Y225 to the emitter of Q226.

Tuning

Y225 is the 100 MHz oscillator precision frequency stabilizing element. D125 and L125 provide corrective +/- 1 KHz tuning.

Distribution Amplifier

Q225 and Q227 form a distribution amplifier. Q225 provides 100 MHz to clipping diodes CR201 and CR200. Q227, applies 100 MHz to amplifier Q228. This device provides reverse isolation to keep undesired signals from being reflected into the 100 MHz oscillator.

3X Multiplier

Diodes CR200 and CR201 clip the 100 MHz signal and generate harmonics. The filter consisting of L103, L104, L105, L106, L201, L202, L203, L204, L205, L206, L207, L208, L209, L210, and associated capacitors passes the third harmonic, 300 MHz, and shunts unwanted harmonics to ground. Amplifiers Q200, Q201, Q202, and associated parts amplify the 300 MHz to about +8 dBm at TP100.

Divide by 100

The output of Q228 is applied to U225. *(Schematic, page 2)* U225 divides the100 MHz signal to 1 MHz, TP226.

Comparator, Difference Amplifier and Tune Voltage

U226/U227A with C239 and C237 compares the, U225, 1 MHz signal with a 1 MHz signal derived from the external reference. If the oscillator frequency is greater than 100 MHz, U226A will clock before U226B and cause its Qbar output to be low for a larger percentage of time than the Qbar output of U226B. This causes the voltage across C237 to be less than the voltage across C239. U125A amplifies the difference between these two voltages. In this situation, the amplifier output is a negative voltage that, when applied to D125, *(Schematic, page 1)* tunes the oscillator in a lower frequency direction, to 100 MHz.

28.9 MHz Oscillator

Q450 and associated components form a colpitts oscillator that produces 28.9 MHz. L450 and related capacitors are a resonate circuit. Feed back is through C355, D451, C454, D450, L451, and Y450 to the emitter of Q450. The distribution amplifier, Q350/Q351, and phaselock circuits are similar to the 100 MHz oscillator circuits. Q352 *(Schematic page 2)* amplifies the 28.9 MHz to TTL, and U350 mixes it with the 29th harmonic of 1 MHz, producing 100 KHz, at TP351.

Compare and Tune

The 28.9 MHz oscillator derived 100 KHz is compared to the Reference Frequency derived 100 KHz. U450A detects any difference and produces an appropriate tuning voltage.

Reference Input

The Front and Rear panel REF IN connectors are connected to J150 and J751 respectively. These two connectors are directly connected to each other and through C152 to Q250.

> NOTE
> A 10 MHz reference signal for the oscillator phaselock circuits must be applied to one of the REF IN inputs.

DETAILED CIRCUIT DESCRIPTION, Continued:

Reference Amplifier

Q250 amplifies the Reference In signal and converts it to TTL levels, TP253.

Protection Diode

CR250 prevents very large signal levels from breaking down the emitter base junction of Q250.

1 MHz Reference

U251 divides the 10 MHz by 10 providing a 1 MHz reference for the two phaselock circuits, TP251.

100 KHz Reference

U252 divides the 1 MHz by 10 providing a 100 KHz reference, TP250.

Lock Indicator

U254 and U255 monitor the tune voltages of the oscillator tune circuits. If the tune voltage levels remain in the range of -5.2 volts to +10.5 volts, all four comparator outputs will remain high, allowing Q270 to conduct and supply current to the green LOCK indicator on the front panel. If either oscillator's tune voltage exceeds the acceptable range, one or more of the comparator outputs will conduct through R262, turning off Q270 and the LOCK indicator. (U254 and U255 have open collector outputs)

REF OUT Buffer

U253 is a buffer and drive device for the reference signal outputs. J250 is directly connected to the rear panel REF OUT, and J251 is directly connected to the front panel REF OUT. The two groups of 182 ohm resistors provide a 50 ohm reverse termination pad for their respective output connectors.

Power Supply

The Power Supply Module is connected to the Circuit Board Module via ribbon cable and P175.

> NOTE
> The P175 to P150 loop through is for future applications.

P175

At P175, the power supply provides +12, +5, -5 and -12 volts to the Circuit Board Module.

-5 volts

The - 5 volt supply is not used. R176 is a stabilizing load resistor.

+5 volts

The +5 volts is used. R175 is a minimum-load resistor.

+8 volts, regulated

The +12 volts is regulated to +8 volts by U375. R275 and R276 control the output voltage of the adjustable voltage regulator.

-5.2 volts, Low Ripple

The -12 volts supply is regulated to a low-ripple -5.2 volts by U275 and its associated circuitry.

Decouple

The +12, +5 and -12 volt supplies are all decoupled by inductors and bypass capacitors to ground.

OPERATIONAL CHECK

• Connect the RF162 to a power source and press the POWER switch to turn the instrument on.

Check - The POWER LED should be lit.

• Connect a 10 MHz ±2 PPM reference signal to one of the REF IN connectors.

Check - The LOCK LED should be lit. This is an indication that both oscillators are phase locked to the reference signal.

• Connect a Signal Generator to the SIGNAL IN connector. For standard configuration, apply 21.4MHz at -36 dBm or for Option 03, apply 321.4 MHz at -30 dBm.

Check - A 7.5 MHz , -20 dBm ±4 dB signal should be present at the 7.5 MHz OUTPUT connector.

• Change the frequency of the applied signal, in 0.1 MHz steps. For standard configuration, from 18.9 to 23.9 MHz or for Option 03 configuration, from 318.9 MHz to 323.9 MHz.

Check - The 7.5 MHz OUTPUT tracks from 5 MHz to 10 MHz and power stays within 1 dB peak-to-peak.

PERFORMANCE CHECKS

Perform these Checks in the order listed. If a problem is encountered, refer to the corresponding step under "Trouble Shooting".

1. Power Supplies

Procedure: • Apply power

Performance Requirement: Voltages at test points: +8 - TP278, +5 - TP151, and -5.2 - TP275. Within 5% of nominal voltage. Power indicator light should be lit.

2. REF IN and REF OUT Circuits

Procedure: • Apply 10 MHz ±2 PPM at -5 to + 15 dBm to J150 or J151.

Performance Requirement: At J250 and J251, 10 MHz signals at TTL levels

3. 100 MHz Oscillator

Procedure: •Short TP125 to ground.

• Connect TP225 to the input of an oscilloscope.

• Set the oscilloscope controls:

.1 volt/div
dc coupling.

Performance Requirement: At TP225, voltage is set to its maximum positive value, about -1 volt.

Diagnostic Information: Adjust C226, to set the voltage at TP225 to its most positive value (nearest to ground potential).

PERFORMANCE CHECK Continued:

4. 28.9 MHz Oscillator

Procedure:
- Short TP760 to ground.
- Connect TP450 to the input of an oscilloscope.
- Set the oscilloscope controls:

  .1 volt/div
  dc coupling.

Performance Requirement: At TP450, voltage is set to its maximum positive value, about -1 volt.

Diagnostic Information: Adjust C451 to set the voltage at TP450 to its most positive value (nearest to ground potential).

5. Phaselock

Procedure:
- Remove the shorting devices from TP125 and TP760.
- measure a voltage between -3 and +8 volts at TP125 and TP760.

Performance Requirement: Confirm the Front Panel LOCK indicator is lit.

Diagnostic Information: When LOCK is lit, the oscillators are phase locked to the Reference In signal.

6. 21.4 MHz Signal Path

Procedure:
- Set J110 to Standard configuration and J410 to activate J401.
- Apply a 21.4 MHz -30 dBm signal to J100. (use a TR 503 or equivalent)
- Connect J401 to the input of a 49X spectrum analyzer.
- Set the spectrum analyzer controls:

center frequency	21.4 MHz,
span-div	500 KHz,
ref level	-20 dBm,
dB/div	1 dB/div (2 dB/div on 496 or 492).

Performance Requirement: The 21.4 MHz signal at J401 should be at -25 dBm ±4 dB.

Diagnostic Information: The J401 signal amplitude should vary less than 2 dB peak-to-peak when the input is moved through 18.9 MHz to 23.9 MHz. Increase the oscilloscope span/div to 5 MHz and the dB/div to 10 dB. The oscilloscope waveform should have notches at about 5 and 10 MHz and a passband of 18.9 to 23.9 Mhz with roll off starting at about 25 MHz.

PERFORMANCE CHECK Continued:

7. Image Rejection Filter

Procedure:

- Set J410 and J480 to couple circuits. *(Their schematic bottom positions).*
- Install the EMI shields.
- Connect J425 to the input of a 49X.
- Set the spectrum analyzer controls:

center frequency	See table below
span-div	10 kHz
ref level	-50 dBm,
dB/div	10 dB/div

- Apply -36 dBm signals to J100, at frequencies shown in the table below.

Signal to J100	SA Center Freq.	Signal at J425
33.9 MHz	5 MHz	≤ -110 dBm
36.4MHz	7.5 MHz	≤ -110 dBm
38.9 MHz	10 MHz	≤ -110 dBm

Adjust C401, C402, and C352 as necessary to meet these specifications.

8. Flatness (in Standard Configuration)

Procedure: Use the above (Step 7) setup but apply frequencies to J100 from 18.9 to 23.9 MHz in 0.1 MHz steps.

Performance Requirement: Flatness does not exceed 1 dB peak-to-peak.

9. Output Circuit

Procedure: Use the Step 7 setup and change the spectrum analyzer controls as follows:

center frequency	7.5 MHz,
span-div	500 KHz,
ref level	-15 dBm,
dB/div	2 dB/div

- Apply a 321.4 MHz, -30 dBm signal to the input of the 321.4 MHz bandpass filter.

Performance Requirement: Signal at J425 is 7.5 MHz at -20 dBm ±4 dB.

10. Flatness (in Option 03 Configuration)

Procedure: Use the above (Step 7) setup but apply frequencies to J101 from 318.9 to 323.9 MHz in 0.1 MHz steps.

Performance Requirement: Ripple is less than 1 dB peak to peak.

Diagnostic Information: For steps 8,9,and 10, slight readjustment of C401, C402, and C352 may be required.

TROUBLE SHOOTING

The order of these steps corresponds to the order of the Performance Checks.

Step 1. Power Supplies:

Problem: *+ 8 V_1 + 8 V_2 and +8V_3 are not present on circuit board.*

Check: +8 volts at TP278.

Check: +12 volts at TP277.

Check: +12 volts at pin 1 of P150.

Discussion: If +12 volts is present at TP277 but +8 volts is not present at TP278 and regulator U375 is hot, look for a short to ground in the +8 volt circuit. If it is cold, the regulator is probably defective.

The -5.2 volt supply can be checked in a similar manner. Use TP276, TP275 and pin 5 of P150.

If +5 is not present, check TP151 and pin 34 of P150. If +5 is present on P150, but not at TP151, L176 or L175 could be open.

Step 2. REF IN and REF OUT Signals:

Problem: *No REF OUT signal at J250 or J251.*

Check: With a valid REF IN applied, a 10 MHz signal at TTL levels should exist at TP252.

Discussion: If proper signals are found at TP252 and problem still exists, check U253.

Step 3. 100 MHz Oscillator:

Problem 1: *Voltage on TP225 is not between -0.6 and -1.4 volts.*

Check: Supply voltages +8V_1 and -5.2V_1 are approximately +7.5 and -4.6 volts respectively.

Discussion: If the supply voltages are not correct, see **Trouble Shooting - Step 1**.

Problem 2: *Adjusting C226 has no effect on the voltage at TP225.*

Check: TP100 for 1 volt peak-to-peak at 300 MHz. This is the output of the oscillator, resonate circuit, L225, C218, and C226, and 3X multiplier.

Check: If supply voltages are correct, and the resonate circuit is correct, check C128, C129, C130, L125, Y225, and D125, for integrity and correct installation.

Discussion: If **Problem 2** still exists after performing the checks, short pin 1 of D125 to the emitter of Q226. If the circuit oscillates, adjust C123 for 300 MHz at TP100.

If the maximum frequency is < 100 MHz, the inductor or a capacitor is too large in value.

If the minimum frequency is > 100 MHz, the inductor a capacitor is too small in value.

If the oscillator can be adjusted to 100 MHz but will not run without the short, check and replace as necessary, Y225, D125, or L125.

TROUBLE SHOOTING, continued:

Step 4. 21.4 MHz Oscillator

Problem 1: *Voltage on TP450 is not between -0.6 and -1.4 volts.*

Check: Supply voltages $+8V_2$ and $-5.2V_2$ are approximately +7.5 and -4.6 volts respectively.

Discussion: If the supply voltages are not correct, see **Trouble Shooting - Step 1.**

Problem 2: *Adjusting C451 has no effect on the voltage at TP450.*

Check: TP350 for 1 volt peak-to-peak at 28.9 MHz. This is the output of the oscillator and resonate circuit, L450, C450 and C451.

Check: If supply voltages and the resonate circuit output are correct, check C355, C452, C454, Y450, D450, D451, and L451 for integrity and correct installation.

Discussion: If **Problem 2** still exists after performing the checks, short pin 3 of D451 to the emitter of Q450. If the circuit oscillates, adjust C451 for 28.9 MHz at TP350.

If the maximum frequency is < 28.9 MHz, the inductor or a capacitor is too large in value.

If the minimum frequency is > 28.9 MHz, the inductor a capacitor is too small in value

If the oscillator can be adjusted to 28.9 MHz but will not run without the short, check Y450, D450, D451, and their related components and replace as necessary.

Step 5. Phaselock

Problem: Front panel LOCK is not lit.

Check: The voltages on TP125 and TP760 are between -3 and +8 volts.

Check: If the voltages are correct, check Tune Voltage Comparator devices U254 and U255 and their related components for integrity and correct installation.

Check: If the voltage on TP125 is at a maximum positive or maximum negative, check TP226 for a 1 MHz signal at TTL levels. If this frequency is not present check U225, Q228 and Q227 for integrity and correct installation.

Check: If the voltage on TP760 is at a maximum positive or maximum negative, check TP352 for a 28.9 MHz, TTL signal. Check TP351 for a 100 KHz signal.

Check: If either or both voltages at TP125 and TP760 are incorrect, to isolate the problem:

- Adjust the Reference In frequency to 10.5 MHz. This should cause both Test Point voltages to go to about +11 volts.

- Adjust the Reference In frequency to 9.5 MHz. This should cause both Test Point voltages to go to about -11 volts.

Discussion: If the Test Point voltages respond properly to the 10.5 MHz and 9.5 MHz Reference In frequency settings, but are not correct with a setting of 10 MHz ±2 PPM, check the voltages on both sides of the appropriate oscillator tuning diode, D125 or D450 and D451. These diodes should have approximately -4.5 volts on the crystal end and the Test Point voltage on the other end.

TROUBLE SHOOTING, continued:

Step 6. 21.4 MHz Signal Path

Problem: The 21.4 MHz signal applied to J100 is not present at J401.

Procedure:
- Increase signal level to -10 dBm.
- With an oscilloscope:

Check: The DC voltage at TP300, is approximately +4 volts.

Check: The 21.4 MHz signal amplitude at TP300 is approximately 800 mV peak to peak.

Check: If the 21.4 MHz signal is not present at TP300, check Q301 and T300 with their associated components and the emitter circuit of Q300 for integrity and correct installation.

Check: If the ripple of the 21.4 MHz signal at J401 is greater than 2 dB peak-to-peak, check the filter components between J100 and pin 1 of T300 for integrity and correct installation.

Step 7. Image Rejection Filter

Problem: The 21.4 MHz signal applied to J100 is present at J401 but not at J426.

Procedure:
- Increase signal level to -10 dBm.
- With an oscilloscope:

Check: L401, L301, L302, L350 and associated capacitors for integrity and correct installation. The signal levels through out this circuit should be greater than 200 mV peak-to-peak.

Check: Flatness is adjusted to specified performance requirement.

Check: Rejection at 33.9 to 38.9 MHz is sufficient.

Discussion: Adjust the stop band first, then the pass band. Readjust as required to meet the flatness performance requirement.

TROUBLE SHOOTING, continued:

Step 8. Output Circuit

Problem 1: The 21.4 MHz signal applied to J100 is present at J426 but not at J425.

Procedure:
- Increase signal level to -10 dBm.
- With an oscilloscope:

Check: The DC voltage at the collector of Q426, is approximately +3.4 volts.

Check: The 7.5 MHz signal amplitude of the at the collector of Q426, is approximately 1 volt peak-to-peak.

Problem 2: Flatness is not within specified performance requirement.

Check: C330, L325 and C427 for integrity and correct installation.

Discussion: If **Problem 1** still exists, check U325 for integrity and correct installation.

ELECTRICAL PARTS LIST

Assy. No.	Tek Part No.	Description
A1	671-0572-00	Power Supply Assembly (see page 5 - 11)
A2	671-1844-00	Circuit Board Assembly

Circuit Board A2 Electrical Parts

Ckt. No.	Value	Tek Part No.	Type	Description
C100,	.1UF	283500400	1206 SR1206B	CAPACITOR,CER 10%,25V,X7R
C101,	47PF	283502200	1206 SR1206B	CAPACITOR,CER 5%,50V,NPO
C102,	1000PF	283500200	1206 SR1206B	CAPACITOR,CER 5%,50V,NPO
C103,	2PF	283501900	1206 SR1206B	CAPACITOR,CER +/-.25pF,50V,NPO
C104,	1UF	283501600	2224 SC2224	CAPACITOR,CER 10%,50V,X7R
C105,	1UF	283501600	2224 SC2224	CAPACITOR,CER 10%,50V,X7R
C106,	100PF	283500100	1206 SR1206B	CAPACITOR,CER 5%,50V,NPO
C107,	15PF	283500900	1206 SR1206B	CAPACITOR,CER 5%,50V,NPO
C108,	15PF	283500900	1206 SR1206B	CAPACITOR,CER 5%,50V,NPO
C109,	12PF	283500800	1206 SR1206B	CAPACITOR,CER 5%,50V,NPO
C110,	5PF	283500600	1206 SR1206B	CAPACITOR,CER +/-.25pF,50V,NPO
C111,	15PF	283500900	1206 SR1206B	CAPACITOR,CER 5%,50V,NPO
C125,	1UF	283501600	2224 SC2224	CAPACITOR,CER 10%,50V,X7R
C126,	1UF	283501600	2224 SC2224	CAPACITOR,CER 10%,50V,X7R
C127,	1000PF	283500200	1206 SR1206B	CAPACITOR,CER 5%,50V,NPO
C128,	8PF	283500700	1206 SR1206B	CAPACITOR,CER +/-.5pF,50V,NPO
C129,	2PF	283501900	1206 SR1206B	CAPACITOR,CER +/-.25pF,50V,NPO
C130,	33PF	283501100	1206 SR1206B	CAPACITOR,CER 5%,50V,NPO
C131,	.1UF	283500400	1206 SR1206	CAPACITOR,CER 10%,25V,X7R
C132,	.1UF	283500400	1206 SR1206B	CAPACITOR,CER 10%,25V,X7R
C133,	1UF	283501600	2224 SC2224	CAPACITOR,CER 10%,50V,X7R
C134,	.1UF	283500400	1206 SR1206B	CAPACITOR,CER 10%,25V,X7R
C135,	.01UF	283500300	1206 SR1206B	CAPACITOR,CER 10%,50V,X7R
C136,	.1UF	283500400	1206 SR1206B	CAPACITOR,CER 10%,25V,X7R
C137,	.1UF	283500400	1206 SR1206B	CAPACITOR,CER 10%,25V,X7R
C151,	.1UF	283500400	1206 SR1206B	CAPACITOR,CER 10%,25V,X7R
C152,	.1UF	283500400	1206 SR1206B	CAPACITOR,CER 10%,25V,X7R
C175,	10UF	290503900	SM.SC503 5	CAPACITOR,ALUM 20%,35V
C176,	10UF	290503900	SM.SC503 5	CAPACITOR,ALUM 20%,35V
C177,	10UF	290503900	SM.SC503 5	CAPACITOR,ALUM 20%,35V
C178,	10UF	290503900	SM.SC503 5	CAPACITOR,ALUM 20%,35V
C200,	330PF	283501400	1206 SR1206B	CAPACITOR,CER 5%,50V,NPO
C201,	.1UF	283500400	1206 SR1206B	CAPACITOR,CER 10%,25V,X7R
C202,	.1UF	283500400	1206 SR1206B	CAPACITOR,CER 10%,25V,X7R
C203,	.1UF	283500400	1206 SR1206B	CAPACITOR,CER 10%,25V,X7R
C204,	47PF	283502200	1206 SR1206B	CAPACITOR,CER 5%,50V,NPO
C205,	.1UF	283500400	1206 SR1206B	CAPACITOR,CER 10%,25V,X7R
C206,	330PF	283501400	1206 SR1206B	CAPACITOR,CER 5%,50V,NPO
C207,	47PF	283502200	1206 SR1206B	CAPACITOR,CER 5%,50V,NPO
C208,	.1UF	283500400	1206 SR1206B	CAPACITOR,CER 10%,25V,X7R

Ckt. No.	Value	Tek Part No.	Type	Description
C209,	4PF	283500500	1206 SR1206B	CAPACITOR,CER +/-.25pF,50V,NPO
C210,	100PF	283500100	1206 SR1206B	CAPACITOR,CER 5%,50V,NPO
C211,	100PF	283500100	1206 SR1206B	CAPACITOR,CER 5%,50V,NPO
C212,	100PF	283500100	1206 SR1206B	CAPACITOR,CER 5%,50V,NPO
C213,	12PF	283500800	1206 SR1206B	CAPACITOR,CER 5%,50V,NPO
C214,	4PF	283500500	1206 SR1206B	CAPACITOR,CER +/-.25pF,50V,NPO
C215,	100PF	283500100	1206 SR1206B	CAPACITOR,CER 5%,50V,NPO
C216,	5PF	283500600	1206 SR1206B	CAPACITOR,CER +/-.25pF,50V,NPO
C217,	12PF	283500800	1206 SR1206B	CAPACITOR,CER 5%,50V,NPO
C218,	100PF	283500100	1206 SR1206B	CAPACITOR,CER 5%,50V,NPO
C219,	12PF	283500800	1206 SR1206B	CAPACITOR,CER 5%,50V,NPO
C220,	4PF	283500500	1206 SR1206B	CAPACITOR,CER +/-.25pF,50V,NPO
C221,	.1UF	283500400	1206 SR1206B	CAPACITOR,CER 10%,25V,X7R
C222,	1000PF	23500200	1206 SR1206B	CAPACITOR,CER 5%,50V,NPO
C225,	27PF	283504200	1206 SR1206B	CAPACITOR,CER 5%,50V,NPO
C226,	2-18PF	281018400		MECH VARIABLE CAP 2-18PF
C227,	4PF	283500500	1206 SR1206B	CAPACITOR,CER +/-.25pF,50V,NPO
C228,	1000PF	283500200	1206 SR1206B	CAPACITOR,CER 5%,50V,NPO
C229,	.1UF	283500400	1206 SR1206B	CAPACITOR,CER 10%,25V,X7R
C230,	.1UF	283500400	1206 SR1206B	CAPACITOR,CER 10%,25V,X7R
C231,	.1UF	283500400	1206 SR1206B	CAPACITOR,CER 10%,25V,X7R
C232,	.1UF	283500400	1206 SR1206B	CAPACITOR,CER 10%,25V,X7R
C233,	1000PF	283500200	1206 SR1206B	CAPACITOR,CER 5%,50V,NPO
C234,	1000PF	283500200	1206 SR1206B	CAPACITOR,CER 5%,50V,NPO
C235,	1UF	283501600	2224 SC2224	CAPACITOR,CER 10%,50V,X7R
C236,	.01UF	283500300	1206 SR1206B	CAPACITOR,CER 10%,50V,X7R
C237,	.01UF	283500300	1206 SR1206B	CAPACITOR,CER 10%,50V,X7R
C238,	.1UF	283500400	1206 SR1206B	CAPACITOR,CER 10%,25V,X7R
C239,	.01UF	283500300	1206 SR1206B	CAPACITOR,CER 10%,50V,X7R
C240,	.1UF	283500400	1206 SR1206B	CAPACITOR,CER 10%,25V,X7R
C241,	.1UF	283500400	1206 SR1206B	CAPACITOR,CER 10%,25V,X7R
C250,	.1UF	283500400	1206 SR1206B	CAPACITOR,CER 10%,25V,X7R
C251,	.1UF	283500400	1206 SR1206B	CAPACITOR,CER 10%,25V,X7R
C252	.1UF	283500400	1206 SR1206B	CAPACITOR,CER 10%,25V,X7R
C253,	.1UF	283500400	1206 SR1206B	CAPACITOR,CER 10%,25V,X7R
C275,	10UF	290503900	SM.SC503 5	CAPACITOR,ALUM 20%,35V
C276,	.1UF	283500400	1206 SR1206B	CAPACITOR,CER 10%,25V,X7R
C277,	10UF	290503900	SM.SC503 5	CAPACITOR,ALUM 20%,35V
C278,	10UF	290503900	SM.SC503 5	CAPACITOR,ALUM 20%,35V
C279,	.1UF	283500400	1206SR1206B	CAPACITOR,CER 10%,25V,X7R
C280,	.1UF	283500400	1206 SR1206B	CAPACITOR,CER 10%,25V,X7R
C281,	10UF	290503900	SM.SC503 5	CAPACITOR,ALUM 20%,35V
C282,	10UF	290503900	SM.SC503 5	CAPACITOR,ALUM 20%,35V
C300,	.1UF	283500400	1206 SR1206B	CAPACITOR,CER 10%,25V,X7R
C301,	.1UF	283500400	1206 SR1206B	CAPACITOR,CER 10%,25V,X7R
C302,	.01UF	283500300	1206 SR1206B	CAPACITOR,CER 10%,50V,X7R
C303,	.1UF	283500400	1206 SR1206B	CAPACITOR,CER 10%,25V,X7R
C304,	.1UF	283500400	1206 SR1206B	CAPACITOR,CER 10%,25V,X7R
C305,	33PF	283501100	1206 SR1206B	CAPACITOR,CER 5%,50V,NPO
C306,	5PF	283500600	1206 SR1206B	CAPACITOR,CER +/-.25pF,50V,NPO

Ckt. No.	Value	Tek Part No.	Type	Description
C307,	27PF	283504200	1206 SR1206B	CAPACITOR,CER 5%,50V,NPO
C308,	15PF	283500900	1206 SR1206B	CAPACITOR,CER 5%,50V,NPO
C309,	8PF	283500700	1206 SR1206B	CAPACITOR,CER +/-.5pF,50V,NPO
C310,	27PF	283504200	1206 SR1206B	CAPACITOR,CER 5%,50V,NPO
C311,	100PF	283500100	1206 SR1206B	CAPACITOR,CER 5%,50V,NPO
C325,	15PF	283500900	1206 SR1206B	CAPACITOR,CER 5%,50V,NPO
C326,	27PF	283504200	1206 SR1206B	CAPACITOR,CER 5%,50V,NPO
C327 ,	8PF	283500700	1206 SR1206B	CAPACITOR,CER +/-.5pF,50V,NPO
C328,	100PF	283500100	1206 SR1206B	CAPACITOR,CER 5%,50V,NPO
C329,	560PF	283505000	1206 SR1206B	CAPACITOR,CER 5%,50V,NPO
C330,	220PF	283502500	1206 SR1206B	CAPACITOR,CER 5%,50V,NPO
C331,	.1UF	283500400	1206 SR1206B	CAPACITOR,CER 10%,25V,X7R
C350,	47PF	283502200	1206 SR1206B	CAPACITOR,CER 5%,50V,NPO
C351,	100PF	283500100	1206 SR1206B	CAPACITOR,CER 5%,50V,NPO
C352,	5-50PF	281020800	MECH	VARIABLE CAP 5-50PF
C353,	.1UF	283500400	1206 SR1206B	CAPACITOR,CER 10%,25V,X7R
C354,	15PF	283500900	1206 SR1206B	CAPACITOR,CER 5%,50V,NPO
C355,	100PF	283500100	1206 SR1206B	CAPACITOR,CER 5%,50V,NPO
C356,	.1UF	283500400	1206 SR1206B	CAPACITOR,CER 10%,25V,X7R
C357,	.01UF	283500300	1206 SR1206B	CAPACITOR,CER 10%,50V,X7R
C358,	.1UF	283500400	1206 SR1206B	CAPACITOR,CER 10%,25V,X7R
C359,	.1UF	283500400	1206 SR1206B	CAPACITOR,CER 10%,25V,X7R
C360,	.1UF	283500400	1206 SR1206B	CAPACITOR,CER 10%,25V,X7R
C361,	.1UF	283500400	1206 SR1206B	CAPACITOR,CER 10%,25V,X7R
C362,	1UF	283501600	2224 SC2224	CAPACITOR,CER 10%,50V,X7R
C363,	1UF	283501600	2224 SC2224	CAPACITOR,CER 10%,50V,X7R
C364,	.01UF	283500300	1206 SR1206B	CAPACITOR,CER 10%,50V,X7R
C365,	.01UF	283500300	1206 SR1206B	CAPACITOR,CER 10%,50V,X7R
C366,	.1UF	283500400	1206 SR1206B	CAPACITOR,CER 10%,25V,X7R
C400,	5-50PF	281020800	MECH	VARIABLE CAP 5-50PF
C401,	27PF	283504200	1206 SR1206B	CAPACITOR,CER 5%,50V,NPO
C402,	5-50PF	281020800	MECH	VARIABLE CAP 5-50PF
C403,	33PF	283501100	1206 SR1206B	CAPACITOR,CER 5%,50V,NPO
C404,	100PF	283500100	1206 SR1206B	CAPACITOR,CER 5%,50V,NPO
C405,	560PF	283505000	1206 SR1206B	CAPACITOR,CER 5%,50V,NPO
C425,	.1UF	283500400	1206 SR1206B	CAPACITOR,CER 10%,25V,X7R
C426,	.1UF	283500400	1206 SR1206B	CAPACITOR,CER 10%,25V,X7R
C427,	390PF	283502600	1206 SR1206B	CAPACITOR,CER 5%,50V,NPO
C428,	.01UF	283500300	1206 SR1206B	CAPACITOR,CER 10%,50V,X7R
C429,	.1UF	283500400	1206 SR1206B	CAPACITOR,CER 10%,25V,X7R
C430,	.1UF	283500400	1206 SR1206B	CAPACITOR,CER 10%,25V,X7R
C431,	1UF	283501600	2224 SC2224	CAPACITOR,CER 10%,50V,X7R
C432,	1UF	283501600	2224 SC2224	CAPACITOR,CER 10%,50V,X7R
C433,	.01UF	283500300	1206 SR1206B	CAPACITOR,CER 10%,50V,X7R
C450,	27PF	283504200	1206 SR1206B	CAPACITOR,CER 5%,50V,NPO
C451,	5-50PF	281020800	MECH	VARIABLE CAP 5-50PF
C452,	100PF	283500100	1206 SR1206B	CAPACITOR,CER 5%,50V,NPO
C453,	.1UF	283500400	1206 SR1206B	CAPACITOR,CER 10%,25V,X7R
C454,	33PF	283501100	1206 SR1206B	CAPACITOR,CER 5%,50V,NPO
C455,	.1UF	283500400	1206 SR1206B	CAPACITOR,CER 10%,25V,X7R

Ckt. No.	Value	Tek Part No.	Type	Description
C456,	.1UF	283500400	1206 SR1206B	CAPACITOR,CER 10%,25V,X7R
C457,	.1UF	283500400	1206 SR1206B	CAPACITOR,CER 10%,25V,X7R
C458,	.01UF	283500300	1206 SR1206B	CAPACITOR,CER 10%,50V,X7R
C459,	.1UF	283500400	1206 SR1206B	CAPACITOR,CER 10%,25V,X7R
C460,	.01UF	283500300	1206 SR1206B	CAPACITOR,CER 10%,50V,X7R
C461,	1UF	283501600	2224 SC2224	CAPACITOR,CER 10%,50V,X7R
C462,	1UF	283501600	2224 SC2224	CAPACITOR,CER 10%,50V,X7R
L100,	135NH	108022000	MECH	D_L022 COIL,RF,+/-10%
L101,	120NH	108500600	1108 SS163	INDUCTOR 5%
L102,	24NH	108045500	MECH	D_L016 INDUCTOR
L103,	24NH	108045500	MECH	D_L016 INDUCTOR
L104,	150NH	108501900	1108 SS163-05	INDUCTOR 5%
L105,	150NH	108501900	1108 SS163-05	INDUCTOR 5%,
L106,	150NH	108501900	1108 SS163-05	INDUCTOR 5%,
L125,	270NH	108502000	1108 SS163	INDUCTOR 5%,FXD,SMD
L175,	100UH	108126200	MECH	INDUCTOR TSL 0807-101KR75
L176,	100UH	108126200	MECH	INDUCTOR TSL 0807-101KR75
L177,	100UH	108126200	MECH	INDUCTOR TSL 0807-101KR75
L178,	100UH	108126200	MECH	INDUCTOR TSL 0807-101KR75
L200,	1.2UH	108096400	MECH	COIL,RF, +/-5% TOROIDAL
L201,	30NH	108502800	1108 SS162	INDUCTOR 5%,
L202,	24NH	108045500	MECH D_L016	INDUCTOR
L203,	24NH	108045500	MECH D_L016	INDUCTOR
L204,	24NH	108045500	MECH D_L016	INDUCTOR
L205,	30NH	108502800	1108 SS162	INDUCTOR 5%,
L206,	70NH	108500100	1108 SS163	INDUCTOR 5%,1008CT-700-05
L207,	70NH	108500100	1108 SS163	INDUCTOR 5%,1008CT-700-05
L208,	30NH	108502800	1108 SS162	INDUCTOR 5%,
L209,	24NH	108045500	MECH D_L016	INDUCTOR
L210,	70NH	108500100	1108 SS163	INDUCTOR 5%,1008CT-700-05
L225,	24NH	108045500	MECH D_L016	INDUCTOR
L226,	560NH	108500500	1108 SS163	INDUCTOR 5%,1008CS-561-05
L227,	560NH	108500500	1108 SS163	INDUCTOR 5%,1008CS-561-05
L275,	100UH	108126200	MECH	INDUCTOR TSL 0807-101KR75
L276,	100UH	108126200	MECH	INDUCTOR TSL 0807-101KR75
L300,	135NH	108022000	MECH D_L022	COIL,RF, +/-10%
L301,	380NH	108006200	MECH D_L022	COIL,RF, +/-10%
L302,	380NH	108006200	MECH D_L022	COIL,RF,+/-10%
L325,	560NH	108500500	1108 SS163	INDUCTOR 5%,1008CS-561-05
L350,	300NH	108011200	MECH D_L022	COIL,RF, +/-10%
L400,	380NH	108006200	MECH D_L022	COIL,RF, +/-10%
L401,	300NH	108011200	MECH D_L022	COIL,RF, +/-10%
L425,	27UH	108504800	1712 SL120A	INDUCTOR 10%,NL453232T-270K
L450,	270NH	108502000	1108 SS163	INDUCTOR 5%,FXD,SMD,1008CS-271-05
L451,	2.2UH	108505600	1108 SS-165-04	INDUCTOR 10%,1008FS-222

Ckt. No.	Value	Tek Part No.	Type	Description
R100,	1 47.5	321504300	1206 SR1206B	RESISTOR 1%,1/8W
R101,	10.0	321500000	1206 SR1206B	RESISTOR 1%,1/8W
R102,	10.0	321500000	1206 SR1206B	RESISTOR 1%,1/8W
R103,	182.	321500900	1206 SR1206B	RESISTOR 1%,1/8W
R104,	33.2	321505000	1206 SR1206B	RESISTOR 1%,1/8W
R125,	10.0	321500000	1206 SR1206B	RESISTOR 1%,1/8W
R126,	10.0	321500000	1206 SR1206B	RESISTOR 1%,1/8W
R127,	22.1	321500400	1206 SR1206B	RESISTOR 1%,1/8W
R128,	10.0K	321503000	1206 SR1206B	RESISTOR 1%,1/8W
R129,	10.0K	321503000	1206 SR1206B	RESISTOR 1%,1/8W
R130,	47.5K	321503800	1206 SR1206B	RESISTOR 1%,1/8W
R131,	10.0K	321503000	1206 SR1206B	RESISTOR 1%,1/8W
R132,	332.K	321504800	1206 SR1206B	RESISTOR 1%,1/8W
R151,	150.	321500800	1206 SR1206B	RESISTOR 1%,1/8W
R152,	1.00K	321501800	1206 SR1206B	RESISTOR 1%,1/8W
R153,	1.00K	321501800	1206 SR1206B	RESISTOR 1%,1/8W
R154,	1.00K	321501800	1206 SR1206B	RESISTOR 1%,1/8W
R155,	1.00K	321501800	1206 SR1206B	RESISTOR 1%,1/8W
R175,	7.5	308012500	MECH	RESISTOR 5%,10W
R176,	7.5	308012500	MECH	RESISTOR 5%,10W
R200,	68.1	321504500	1206 SR1206B	RESISTOR 1%,1/8W
R201,	2.21K	321502200	1206 SR1206B	RESISTOR 1%,1/8W
R202,	681.	321501600	1206 SR1206B	RESISTOR 1%,1/8W
R203,	56.2	321504400	1206 SR1206B	RESISTOR 1%,1/8W
R204,	82.5	321504600	1206 SR1206B	RESISTOR 1%,1/8W
R205,	332.	321501200	1206 SR1206B	RESISTOR 1%,1/8W
R206,	62K	321502700	1206 SR1206B	RESISTOR 1%,1/8W
R207,	392.	321501300	1206 SR1206B	RESISTOR 1%,1/8W
R208,	681.	321501600	1206 SR1206B	RESISTOR 1%,1/8W
R209,	56.2	321504400	1206 SR1206B	RESISTOR 1%,1/8W
R210,	68.1	321504500	1206 SR1206B	RESISTOR 1%,1/8W
R211,	68.1	321504500	1206 SR1206B	RESISTOR 1%,1/8W
R212,	33.2	321505000	1206 SR1206B	RESISTOR 1%,1/8W
R213,	392.	321501300	1206 SR1206B	RESISTOR 1%,1/8W
R214,	56.2	321504400	1206 SR1206B	RESISTOR 1%,1/8W
R215,	392.	321501300	1206 SR1206B	RESISTOR 1%,1/8W
R216 ,	33.2	321505000	1206 SR1206B	RESISTOR 1%,1/8W
R217,	221.	321501000	1206 SR1206B	RESISTOR 1%,1/8W
R225,	15.0	321500200	1206 SR1206B	RESISTOR 1%,1/8W
R226,	68.1	321504500	1206 SR1206B	RESISTOR 1%,1/8W
R227,	22.1	321500400	1206 SR1206B	RESISTOR 1%,1/8W
R228,	22.1	321500400	1206 SR1206B	RESISTOR 1%,1/8W
R229,	22.1	321500400	1206 SR1206B	RESISTOR 1%,1/8W
R230,	68.1	321504500	1206 SR1206B	RESISTOR 1%,1/8W
R231,	100.	321500600	1206 SR1206B	RESISTOR 1%,1/8W
R232,	100.	321500600	1206 SR1206B	RESISTOR 1%,1/8W
R233,	1 47.5	321504300	1206 SR1206B	RESISTOR 1%,1/8W
R234,	56.2	321504400	1206 SR1206B	RESISTOR 1%,1/8W
R235,	100.	321500600	1206 SR1206B	RESISTOR 1%,1/8W
R236,	182.	321500900	1206 SR1206B	RESISTOR 1%,1/8W

Ckt. No.	Value	Tek Part No.	Type	Description
R237,	1.00K	321501800	1206 SR1206B	RESISTOR 1%,1/8W
R238,	22.1	321500400	1206 SR1206B	RESISTOR 1%,1/8W
R239,	332.K	321504800	1206 SR1206B	RESISTOR 1%,1/8W
R240,	332.K	321504800	1206 SR1206B	RESISTOR 1%,1/8W
R241,	332.K	321504800	1206 SR1206B	RESISTOR 1%,1/8W
R242,	332.K	321504800	1206 SR1206B	RESISTOR 1%,1/8W
R243,	332.K	321504800	1206 SR1206B	RESISTOR 1%,1/8W
R250,	10.0K	321503000	1206 SR1206B	RESISTOR 1%,1/8W
R251,	1.00K	321501800	1206 SR1206B	RESISTOR 1%,1/8W
R252,	182.	321500900	1206 SR1206B	RESISTOR 1%,1/8W
R253,	182.	321500900	1206 SR1206B	RESISTOR 1%,1/8W
R254,	182.	321500900	1206 SR1206B	RESISTOR 1%,1/8W
R255,	182.	321500900	1206 SR1206B	RESISTOR 1%,1/8W
R256,	182.	321500900	1206 SR1206B	RESISTOR 1%,1/8W
R257,	182.	321500900	1206 SR1206B	RESISTOR 1%,1/8W
R258,	182.	321500900	1206 SR1206B	RESISTOR 1%,1/8W
R259,	182.	321500900	1206 SR1206B	RESISTOR 1%,1/8W
R260,	10.0K	321503000	1206 SR1206B	RESISTOR 1%,1/8W
R261,	68.1K	321504000	1206 SR1206B	RESISTOR 1%,1/8W
R262,	10.0K	321503000	1206 SR1206B	RESISTOR 1%,1/8W
R275,	221.	321501000	1206 SR1206B	RESISTOR 1%,1/8W
R276,	1.21K	321501900	1206 SR1206B	RESISTOR 1%,1/8W
R300,	562.	321501500	1206 SR1206B	RESISTOR 1%,1/8W
R301,	562.	321501500	1206 SR1206B	RESISTOR 1%,1/8W
R302,	274.	321501100	1206 SR1206B	RESISTOR 1%,1/8W
R303,	82.5	321504600	1206 SR1206B	RESISTOR 1%,1/8W
R304,	15.0	321500200	1206 SR1206B	RESISTOR 1%,1/8W
R305,	56.2	321504400	1206 SR1206B	RESISTOR 1%,1/8W
R306,	22.1	321500400	1206 SR1206B	RESISTOR 1%,1/8W
R307,	39.2	321504200	1206 SR1206B	RESISTOR 1%,1/8W
R308,	392.	321501300	1206 SR1206B	RESISTOR 1%,1/8W
R309,	221.	321501000	1206 SR1206B	RESISTOR 1%,1/8W
R310,	10.0	321500000	1206 SR1206B	RESISTOR 1%,1/8W
R325,	39.2	321504200	1206 SR1206B	RESISTOR 1%,1/8W
R326,	1 47.5	321504300	1206 SR1206B	RESISTOR 1%,1/8W
R327,	274.	321501100	1206 SR1206B	RESISTOR 1%,1/8W
R335,	68.1	321504500	1206 SR1206B	RESISTOR 1%,1/8W
R350,	68.1	321504500	1206 SR1206B	RESISTOR 1%,1/8W
R351,	68.1	321504500	1206 SR1206B	RESISTOR 1%,1/8W
R352,	100.	321500600	1206 SR1206B	RESISTOR 1%,1/8W
R353,	68.1	321504500	1206 SR1206B	RESISTOR 1%,1/8W
R354,	22.1	321500400	1206 SR1206B	RESISTOR 1%,1/8W
R355,	22.1	321500400	1206 SR1206B	RESISTOR 1%,1/8W
R356,	22.1	321500400	1206 SR1206B	RESISTOR 1%,1/8W
R357,	68.1	321504500	1206 SR1206B	RESISTOR 1%,1/8W
R358,	10.0K	321503000	1206 SR1206B	RESISTOR 1%,1/8W
R359,	47.5K	321503800	1206 SR1206B	RESISTOR 1%,1/8W
R360,	10.0K	321503000	1206 SR1206B	RESISTOR 1%,1/8W
R361,	562.	321501500	1206 SR1206B	RESISTOR 1%,1/8W
R362,	5.62K	321502700	1206 SR1206B	RESISTOR 1%,1/8W

Ckt. No.	Value	Tek Part No.	Type	Description
R363,	332.K	321504800	1206 SR1206B	RESISTOR 1%,1/8W
R364,	332.K	321504800	1206 SR1206B	RESISTOR 1%,1/8W
R365,	100.K	321504700	1206 SR1206B	RESISTOR 1%,1/8W
R425,	68.1	321504500	1206 SR1206B	RESISTOR 1%,1/8W
R426,	274.	321501100	1206 SR1206B	RESISTOR 1%,1/8W
R427,	68.1	321504500	1206 SR1206B	RESISTOR 1%,1/8W
R428,	82.5	321504600	1206 SR1206B	RESISTOR 1%,1/8W
R429,	27.4	321500500	1206 SR1206B	RESISTOR 1%,1/8W
R430,	68.1	321504500	1206 SR1206B	RESISTOR 1%,1/8W
R431,	39.2	321504200	1206 SR1206B	RESISTOR 1%,1/8W
R432	562	307502700	SOR-16 SRP16	RES,NETWK,COMMON 2%,1/8W
R433,	10.0	321500000	1206 SR1206B	RESISTOR 1%,1/8W
R434,	18.2	321500300	1206 SR1206B	RESISTOR 1%,1/8W
R435,	332.	321501200	1206 SR1206B	RESISTOR 1%,1/8W
R436,	10.0	321500000	1206 SR1206B	RESISTOR 1%,1/8W
R437,	10./0/	321500000	1206 SR1206B	RESISTOR 1%,1/8W
R438,	22.1	321500400	1206 SR1206B	RESISTOR 1%,1/8W
R450,	15.0	321500200	1206 SR1206B	RESISTOR 1%,1/8W
R451,	147.5	321504300	1206 SR1206B	RESISTOR 1%,1/8W
R452,	1.00K	321501800	1206 SR1206B	RESISTOR 1%,1/8W
R453,	100.	321500600	1206 SR1206B	RESISTOR 1%,1/8W
R454,	47.5K	321503800	1206 SR1206B	RESISTOR 1%,1/8W
R455,	10.0K	321503000	1206 SR1206B	RESISTOR 1%,1/8W
R456,	10.0K	321503000	1206 SR1206B	RESISTOR 1%,1/8W
R457,	10.0K	321503000	1206 SR1206B	RESISTOR 1%,1/8W
R458,	332.K	321504800	1206 SR1206B	RESISTOR 1%,1/8W
R663,	332.K	321504800	1206 SR1206B	RESISTOR 1%,1/8W
R664,	100.K	321504700	1206 SR1206B	RESISTOR 1%,1/8W

Ckt. No.	Tek Part No.	Type	Description
CR200,	152084300	QSMS-2812	DI,DUAL SCHOTTKY,SI,SERIES PAIR,20V
CR201,	152084300	QSMS-2812	DI,DUAL SCHOTTKY,SI,SERIES PAIR,20V
CR250,	152500400	BAV99	DI,DUAL DUAL,SERIES PAIR,BU=70V
D125,	152065000	BB-105	DIODE
D450,	152501000	BV109	DI,TUNING 32pF,30V
D451,	152501000	BV109	DI,TUNING 32pF,30V
Q200,	151501000	NE85634	TRANSISTOR NPN,SI,T&R
Q201,	151500800	NE02133	TRANSISTOR NPN,4500MHz,12V
Q202,	151500800	NE02133	TRANSISTOR NPN,4500MHz,12V
Q225,	151500900	BFQ17	TRANSISTOR NPN,SI,T&R
Q226,	151501100	MMBR5179	TRANSISTOR NPN,SI,T&R
Q227,	151500900	BFQ17	TRANSISTOR NPN,SI,T&R
Q228,	151500000	BT3906	TRANSISTOR PNP,SI,T&R
Q250,	151500100	BT3904	TRANSISTOR NPN,SI,T&R
Q270,	151500100	BT3904	TRANSISTOR NPN,SI,T&R
Q300,	151500900	BFQ17	TRANSISTOR NPN,SI,T&R
Q301,	151501100	MMBR5179	TRANSISTOR NPN,SI,T&R
Q350,	151500900	BFQ17	TRANSISTOR NPN,SI,T&R
Q351,	151500900	BFQ17	TRANSISTOR NPN,SI,T&R
Q352,	151501100	MMBR5179	TRANSISTOR NPN,SI,T&R
Q425,	151500900	BFQ17	TRANSISTOR NPN,SI,T&R
Q426,	151500900	BFQ17	TRANSISTOR NPN,SI,T&R
Q450,	151501100	MMBR5179	TRANSISTOR NPN,SI,T&R
U100,	119223000	SBL1	MIXER
U125,	156501701	LM1458	MICROCKT,LINEAR DUAL 741 OPAMP,1MZ
U225,	156124800	SP8629	MICROCKT,ECL DIVIDE BY 100 PRESCALER
U226,	156514500	74HCT74	MICROCKT,DGTL DUAL, D-FLIPFLOP
U227,	156511800	74F00	MICROCKT,DGTL QUAD,2 INPUT NAND GATE
U250,	156511800	74F00	MICROKT,DGTL QUAD,2 INPUT NAND GATE
U251,	156549400	74F160	MICROCKT,DGTL DECADE COUNTER
U252,	156549400	74F160	MICROCKT,DGTL DECADE COUNTER
U253,	156505700	74F244	MICROCKT,DGTL OCTAL BUFFER,3 STATE
U254,	156501900	LM393	MICROCKT,LINEAR DUAL,LOW PWR,LOW OFFSET
U255,	156501900	LM393	MICROCKT,LINEAR DUAL,LOW PWR,LOW OFFSET
U275,	156065500	LM7905.2	MICROCKT,LINEAR VOLTAGE RGLTR,
U325,	119223000	SBL1	MIXER
U350,	156505500	74F74	MICROCKT,DGTL DUAL, D-FLIPFLOP
U351,	156514500	74HCT74	MICROCKT,DGTL DUAL, D-FLIPFLOP
U352,	156511800	74F00	MICROCKT,DGTL QUAD,2 INPUT NAND GATE
U375,	156116100	LM317	MICROCKT,LINEAR VOLTAGE RGLTR, POS, ADJ.
U450,	156501701	LM1458	MICROCKT,LINEAR DUAL 741 OP AMP,1MZ

Ckt. No.	Tek Part No.	Description
J100,	131039100	MECH CONNECTOR STRAIGHT SMB JACK,SMALL
J101,	131039100	MECH CONNECTOR STRAIGHT SMB JACK,SMALL
J102,	131060800	MECH .046/.051 PIN,SQUARE 0.365L x 0.025 PH GOLD PL.
J103,	131060800	MECH .046/.051 PIN,SQUARE 0.365L x 0.025 PH GOLD PL.
J104,	131060800	MECH .046/.051 PIN,SQUARE 0.365L x 0.025 PH GOLD PL.
J105,	131060800	MECH .046/.051 PIN,SQUARE 0.365L x 0.025 PH GOLD PL.
J150,	131039100	MECH CONNECTOR STRAIGHT SMB JACK,SMALL
J151,	131039100	MECH CONNECTOR STRAIGHT SMB JACK,SMALL
J152,	131060800	MECH .046/.051 PIN,SQUARE 0.365L x 0.025 PH GOLD PL.
J250,	131039100	MECH CONNECTOR STRAIGHT SMB JACK,SMALL
J251,	131039100	MECH CONNECTOR STRAIGHT SMB JACK,SMALL
J263,	131060800	MECH .046/.051 PIN,SQUARE 0.365L x 0.025 PH GOLD PL.
J264,	131060800	MECH .046/.051 PIN,SQUARE 0.365L x 0.025 PH GOLD PL.
J265,	131060800	MECH .046/.051 PIN,SQUARE 0.365L x 0.025 PH GOLD PL.
J350,	131060800	MECH .046/.051 PIN,SQUARE 0.365L x 0.025 PH GOLD PL.
J400,	131060800	MECH .046/.051 PIN,SQUARE 0.365L x 0.025 PH GOLD PL.
J401,	131039100	MECH CONNECTOR STRAIGHT SMB JACK,SMALL
J425,	131039100	MECH CONNECTOR STRAIGHT SMB JACK,SMALL
J426,	131039100	MECH CONNECTOR STRAIGHT SMB JACK,SMALL
J551,	131060800	MECH .046/.051 PIN,SQUARE 0.365L x 0.025 PH GOLD PL.
J552,	131060800	MECH .046/.051 PIN,SQUARE 0.365L x 0.025 PH GOLD PL.
J553,	131060800	MECH .046/.051 PIN,SQUARE 0.365L x 0.025 PH GOLD PL.
J601,	131060800	MECH .046/.051 PIN,SQUARE 0.365L x 0.025 PH GOLD PL.
J602,	131060800	MECH .046/.051 PIN,SQUARE 0.365L x 0.025 PH GOLD PL.
J603,	131060800	MECH .046/.051 PIN,SQUARE 0.365L x 0.025 PH GOLD PL.

Ckt. No.	Tek Part No.	Description
TP100,	214408500	MECH 059/.069 TEST POINT SPRING FIT W/COLLAR
TP125,	214408500	MECH 059/.069 TEST POINT SPRING FIT W/COLLAR
TP151,	214408500	MECH 059/.069 TEST POINT SPRING FIT W/COLLAR
TP225,	214408500	MECH 059/.069 TEST POINT SPRING FIT W/COLLAR
TP226,	214408500	MECH 059/.069 TEST POINT SPRING FIT W/COLLAR
TP250,	214408500	MECH 059/.069 TEST POINT SPRING FIT W/COLLAR
TP251,	214408500	MECH 059/.069 TEST POINT SPRING FIT W/COLLAR
TP252,	214408500	MECH 059/.069 TEST POINT SPRING FIT W/COLLAR
TP253,	214408500	MECH 059/.069 TEST POINT SPRING FIT W/COLLAR
TP275,	214408500	MECH 059/.069 TEST POINT SPRING FIT W/COLLAR
TP276,	214408500	MECH 059/.069 TEST POINT SPRING FIT W/COLLAR
TP277,	214408500	MECH 059/.069 TEST POINT SPRING FIT W/COLLAR
TP278,	214408500	MECH 059/.069 TEST POINT SPRING FIT W/COLLAR
TP300,	214408500	MECH 059/.069 TEST POINT SPRING FIT W/COLLAR
TP350,	214408500	MECH 059/.069 TEST POINT SPRING FIT W/COLLAR
TP351,	214408500	MECH 059/.069 TEST POINT SPRING FIT W/COLLAR
TP352,	214408500	MECH 059/.069 TEST POINT SPRING FIT W/COLLAR
TP450,	214408500	MECH 059/.069 TEST POINT SPRING FIT W/COLLAR
TP760,	214408500	MECH 059/.069 TEST POINT SPRING FIT W/COLLAR

Ckt. No.	Freq.	Tek Part No.	Type	Description
Y225,	100MHZ	158023600	TO-5	XTAL,QTZ
Y450,	28.9MHZ	158029500	TO-5	XTAL,QTS

Ckt. No.	Tek Part No.	Type	Description
P150,	131009100	MECH	CONNECTOR 2X17 MALE ,.100 SP,.046/.051
P175 ,	131009100	MECH	CONNECTOR 2X17 MALE ,.100 SP,.046/.051
T300,	120171600	MECH	TRANSFORMER, NORTON

Power Supply, A1 (Serial No. B040000 and up)

Ckt NO.	Value	Tek Part No.	Description
C142	1000UF,6.3V,20%	290-1069-00	CAP,FXD,ELECTLT:
C161	10UF,25V,+50/-20%	290-0804-00	CAP,FXD,ELECTLT:
C169	0.22UF,50V,+20/-80%	283-0423-00	CAP,FXD,CER DI:
C225	1000UF,6.3V,20%	290-1069-00	CAP,FXD,ELECTLT:
C241	330UF,25V,20%	290-1034-00	CAP,FXD,ELECTLT:
C250	330UF,25V,20%	290-1034-00	CAP,FXD,ELECTLT:
C258	1000UF,6.3V,20%	290-1069-00	CAP,FXD,ELECTLT:
C269	0.22UF,50V,+20/-80%	283-0423-00	CAP,FXD,CER DI:
C270	0.22UF,50V,+20/-80%	283-0423-00	CAP,FXD,CER DI:
C320	0.22UF,50V,+20/-80%	283-0423-00	CAP,FXD,CER DI:
C325	1000UF,6.3V,20%	290-1069-00	CAP,FXD,ELECTLT:
C358	1000UF,6.3V,20%	290-1069-00	CAP,FXD,ELECTLT:
C360	1000UF,6.3V,20%	290-1069-00	CAP,FXD,ELECTLT:
C361	10UF,25V,+50/-20%	290-0804-00	CAP,FXD,ELECTLT:
C370	1000UF,6.3V,20%	290-1069-00	CAP,FXD,ELECTLT:
C371	0.22UF,50V,+20/-80%	283-0423-00	CAP,FXD,CER DI:
C415	0.015UF,50V,10%	283-0268-00	CAP,FXD,CER DI:
C464	1000UF,6.3V,20%	290-1069-00	CAP,FXD,ELECTLT:
C475	1000UF,6.3V,20%	290-1069-00	CAP,FXD,ELECTLT:
C521	200PF,500V,1%	283-0672-00	CAP,FXD,MICA DI:
C525	0.01UF,250V,20%	285-1196-00	CAP,FXD,PPR DI:
C540	680PF,1500V,10%	285-1329-00	CAP,FXD,PLASTIC:
C548	0.47UF,400V,5%	285-1331-00	CAP,FXD,MTLZD:
C621	0.0033UF,100V,5%	283-0051-00	CAP,FXD,CER DI:
C648	0.47UF,100V,10%	285-1187-00	CAP,FXD,MTLZD:
C656	100UF,35V,+75/-20%	290-0844-00	CAP,FXD,ELECTLT:
C717	10UF,25V,+50/-20%	290-0804-00	CAP,FXD,ELECTLT:
C718	0.1UF,200V,10%	283-0211-00	CAP,FXD,CER DI:
C722	470PF,500V,5%	283-0032-00	CAP,FXD,CER DI:
C727	0.22UF,50V,+20/-80%	283-0423-00	CAP,FXD,CER DI:
C730	0.01UF,250V,20%	285-1196-00	CAP,FXD,PPR DI:
C830	0.01UF,250V,20%	285-1196-00	CAP,FXD,PPR DI:
C845	220UF,200V,20%	290-1070-00	CAP,FXD,ELECTLT:
C865	220UF,200V,20%	290-1070-00	CAP,FXD,ELECTLT:
C920	0.22UF,250V,10%	285-1323-00	CAP,FXD,MTLZD:

Ckt NO.	Value	Tek Part No.	Description	
CR169	200V,3A,	152-0198-00	SEMICOND DVC,DI:RECT,SI	1N4721
CR170	400V,1A,	152-0066-00	SEMICOND DVC,DI:RECT,SI	1N3194
CR215	400V,1A,	152-0066-00	SEMICOND DVC,DI:RECT,SI	1N3194
CR269	200V,3A,	152-0198-00	SEMICOND DVC,DI:RECT,SI	1N4721
CR320	35V,	152-0884-00	SEMICOND DVC,DI:RECT,SI	MBR1635
CR340	150V,1A,	152-0601-01	SEMICOND DVC,DI:RECT,SI	MUR115
CR348	150V,1A,	152-0601-01	SEMICOND DVC,DI:RECT,SI	MUR115
CR369	400V,1A,	152-0066-00	SEMICOND DVC,DI:RECT,SI	1N3194
CR545	1000PRV,	152-0897-00	SEMICOND DVC,DI:	BYV96E
CR556	400V,1A,	152-0400-00	SEMICOND DVC,DI:RECT,SI	1N4936
CR575	35V,	152-0884-00	SEMICOND DVC,DI:RECT,SI	MBR1635
CR640	1KV,100MA	152-0841-00	SEMICOND DVC,DI:	MUR8100
CR648	150V,100MA	152-0864-00	SEMICOND VC,DI:RECT,SI	
CR649	150V,100MA	152-0864-00	SEMICOND DVC,DI:RECT,SI	
CR651	20V,1A,	152-0581-00	SEMICOND DVC,DI:RECT,SI	1N5817
CR820	600V,3A,	152-0750-00	SEMICOND DVC,DI:	W710

Ckt N0.		Tek Part No.	Description
DS670		150-1017-00	LT EMITTING DIO:GREEN
DS720		150-0035-00	LAMP,GLOW:

Ckt N0.	Value	Tek Part No.	Description
F940	2 AMP	159-0023-00	FUSE,CARTRIDGE: MED BLOW

Ckt N0.		Tek Part No.	Description
J160		131-0608-00	TERMINAL,PIN:0.365 L X 0.025 BRZ GLD PL
J310		131-0608-00	TERMINAL,PIN:0.365 L X 0.025 BRZ GLD PL
J556		131-0608-00	TERMINAL,PIN:0.365 L X 0.025 BRZ GLD PL
J660		131-0608-00	TERMINAL,PIN:0.365 L X 0.025 BRZ GLD PL
J720		131-0608-00	TERMINAL,PIN:0.365 L X 0.025 BRZ GLD PL
J810		131-0608-00	TERMINAL,PIN:0.365 L X 0.025 BRZ GLD PL

Ckt N0.	Value	Tek Part No.	Description
L230	RF 5UH,+/-20%	108-0554-00	COIL:
L258	RF 5UH,+/-20%	108-0554-00	COIL:
L261	RF 100UH	108-1262-00	COIL:
L361	RF 100UH	108-1262-00	COIL:
L520	2MH	108-1448-00	COIL:
L770	RF 1MH	108-0205-00	COIL:

Ckt N0.		Tek Part No.	Description
LF950		119-1946-00	LINE FILTER:EN326-1/02

Ckt N0.		Tek Part No.	Description
P556		131-0993-02	BUS,CONDUCTOR:SHUNT ASSEMBLY,RED
P66		131-0993-02	BUS,CONDUCTOR:SHUNT ASSEMBLY,RED
P720		131-0993-02	BUS,CONDUCTOR:SHUNT ASSEMBLY,RED

Ckt N0.		Tek Part No.	Description
Q127		151-0528-00	TRANSISTOR:SCR,TO-220,2N6400
Q215		151-0435-00	TRANSISTOR:PNP,SI,TO-92,MPSA65
Q638		151-0908-00	TRANSISTOR:NPN,SI,TO-218,MJH16002A
Q648		151-0323-00	TRANSISTOR:NPN,SI,TO-126,MJE521
Q660		151-0190-00	TRANSISTOR:NPN,SI,TO-92,2N3904
Q667		151-0750-00	TRANSISTOR:NPN,SI,TO-92,MPS?A44
Q717		151-0188-00	TRANSISTOR:PNP,SI,TO-92,2N3906
Q727		151-0190-00	TRANSISTOR:NPN,SI,TO-92,2N3904
Q741		151-0324-00	TRANSISTOR:PNP,SI,TO-126,MJE371
Q750		151-0323-00	TRANSISTOR:NPN,SI,TO-126,MJE521
Q755		151-0188-00	TRANSISTOR:PNP,SI,TO-92,2N3906

Ckt N0.	Value	Tek Part No.	Description
R120	100 OHM,5%,	315-0101-00	RES,FXD,FILM: 0.25W
R215	2.7K OHM,5%	315-0272-00	RES,FXD,FILM: 0.25W
R216	4.7K OHM,5%	315-0472-00	RES,FXD,FILM: 0.25W
R225	68 OHM,5%,	301-0680-00	RES,FXD,FILM: 0.5W
R314	2K OHM,5%	315-0202-00	RES,FXD,FILM: 0.25W
R315	1.5K OHM,5%	315-0152-00	RES,FXD,FILM: 0.25W
R316	16K OHM,5%	315-0163-00	RES,FXD,FILM: 0.25W
R415	1K OHM	311-1225-00	RES,VAR,NON, WW:0.5W
R510	250 OHM,	311-0978-00	RES,VAR,NON, WW:
R560	200K OHM,5%	301-0204-00	RES,FXD,FILM: 0.5W
R614	1.5K OHM,5%	315-0152-00	RES,FXD,FILM: 0.25W
R615	750 OHM,1%	321-0181-00	RES,FXD,FILM:
R616	4.75K OHM,1%	321-0258-00	RES,FXD,FILM:
R617	1.8KO HM,5%	315-0182-00	RES,FXD,FILM: 0.25W
R619	1K OHM,5%,	315-0102-00	RES,FXD,FILM: 0.25W
R620	4.3K OHM,5%	315-0432-00	RES,FXD,FILM: 0.25W
R621	1K OHM,5%	315-0102-00	RES,FXD,FILM: 0.25W
R625	75 0OHM,1%	321-0181-00	RES,FXD,FILM:
R630	0.75 OHM,5%,	308-0755-00	RES,FXD,WW: 2W
R647	270K OHM,5%	301-0274-00	RES,FXD,FILM: 0.5W
R665	3.3K OHM,5%	315-0332-00	RES,FXD,FILM: 0.25W
R666	47K OHM,5%	315-0473-00	RES,FXD,FILM: 0.25W
R667	1M OHM,5%,	301-0105-00	RES,FXD,FILM: 0.5W
R717	18K OHM,5%	315-0183-00	RES,FXD,FILM: 0.25W
R718	220 OHM,5%	315-0221-00	RES,FXD,FILM: 0.25W
R722	1K OHM,5%	315-0102-00	RES,FXD,FILM: 0.25W
R731	47K OHM,5%	315-0473-00	RES,FXD,FILM: 0.25W
R746	75 OHM	303-0750-00	RES,FXD,CPMSN:1W
R747	75 OHM	303-0750-00	RES,FXD,CPMSN:1W
R765	1M OHM,5%	301-0105-00	RES,FXD,FILM: 0.5W
R766	365K OHM,	321-0439-00	RES,FXD,FILM: 1%
R767	365K OHM	321-0439-00	RES,FXD,FILM: 1%
R768	76.8K OHM,1%	321-0374-00	RES,FXD,FILM:
R818	10M OHM,5%	315-0106-00	RES,FXD,FILM: 0.25W
R822	1M OHM,5%	301-0105-00	RES,FXD,FILM: 0.5W
R830	150K OHM,5%	301-0204-00	RES,FXD,FILM: 0.5W
R831	150K OHM,5%	301-0204-00	RES,FXD,FILM: 0.5W

Ckt N0.	Value	Tek Part No.	Description
RT723	10 OHM,±10% @ 25°C	307-0863-00	RES,THERMAL,NTC

Ckt N0.	Value	Tek Part No.	Description
RV820	1900PF,100A,130V	307-0449-00	RES,V SENSITIVE:
RV920	1900PF,100A,130V	307-0449-00	RES,V SENSITIVE:

Ckt N0.	Tek Part No.	Description
S930	260-1849 07	SWITCH,PUSH:DPST,4A,250VAC

Ckt N0.	Tek Part No.	Description
T440	120-1782-00	TRANSFORMER:ERIC?MULTICOMP
TP133	214-4085-00	TERM,TEST POINT:BRS CD PL
TP137	214-4085-00	TERM,TEST POINT:BRS CD PL
TP140	214-4085-00	TERM,TEST POINT:BRS CD PL
TP173	214-4085-00	TERM,TEST POINT:BRS CD PL
TP340	214-4085-00	TERM,TEST POINT:BRS CD PL
TP350	214-4085-00	TERM,TEST POINT:BRS CD PL
TP667	214-4085-00	TERM,TEST POINT:BRS CD PL

Ckt N0.	Tek Part No.	Description
U176	156-3633-00	MICROCKT, LINEAR:3-TERM POS VR, +12V, 3%,1A,LM2940CKT-12
U215	156-3217-00	MICROCKT,LINEAR:DS1231
U276	156-2559-00	MICROCKT,LINEAR:3-TERM NEG VR-12V,2%,2.4A,15W,7912
U410	156-1631-00	MICROCKT,LINEAR:SHNT RGLTR,2.5V-36V,431C
U520	156-0885-00	CPLR,OPTOELECTR:30V,150MW,H11AX861
U615	156-1225-00	MICROCKT,LINEAR:DUAL COMPARATOR,LM393
U722	156-2524-00	MICROCKT,LINEAR:PLS WDTH MDLTR,UC3842

Ckt N0.	Value	Tek Part No.	Description
VR120	5V,1%,	152-0662-00	SEMICOND DVC,DI:ZENER,400MW
VR650	20V,5%,	152-0395-00	SEMICOND DVC,DI:ZENER,400MW
VR765	4.3V,5%	152-0304-00	SEMICOND DVC,DI:ZENER,400MW,

Ckt N0.	Tek Part No.	Description
W810	198-5653-00	WIRE SET,ELEC:LINE VOLTAGE SELECTOR

MECHANICAL PARTS LIST

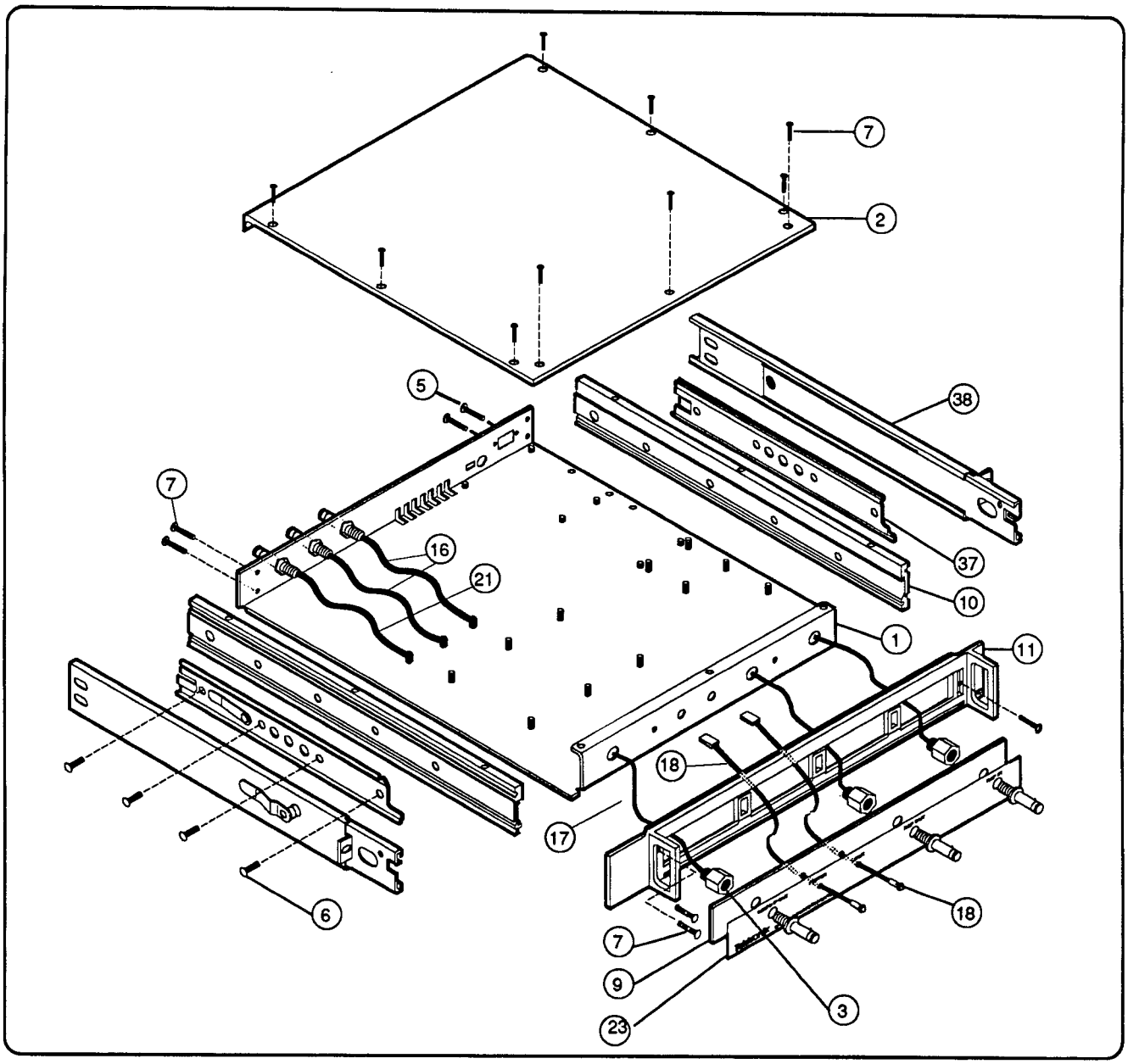

Fig. 6 - 1, RF162 Exploded View (Standard Configuration).

Chassis parts

Item	Part No.	Descripton	Quantity
1	200-3798-00	Bottom Panel	1
2	200-3799-00	Top Panel	1
3	205-0180-00	Standoff, BNC	3
4	210-1039-00	Lock Washer, Internal (.521 ID)	5
5	211-0559-00	Screw, (6 - 32 X .375 Long)	11
6	212-0001-00	Screw, (8 - 32 X .250 Long PH)	8
7	213-0760-00	Screw, THD, Forming (8 - 32 X .875 Long)	8
8	220-0165-00	Nut, (.500 - 32 x .625 Hex)	3
9	386-6041-00	Front Subpanel	1
10	426-2115-00	Side Frame	2
11	426-2380-00	Front Frame, Subpanel, (plastic)	1

Non Chassis Parts

12	131-0707-00	Contact Pin	1
13	150-1054-00	Green LED	2
14	162-0561-00	Insulation material	.3 ft
15	174-0034-00	Ribbon Cable Assy	1
16	174-2025-00	RF Cable Assy	2
17	174-2026-00	RF Cable Assy	3
18	174-2034-00	Ribbon Cable Assy	2
19	174-2087-00	RF Cable Assy	1
20	174-2088-00	RF Cable Assy	1
21	174-2382-00	50 ohm coax 15.0L	1
22	334-1378-00	Serial Number	1
23	334-1904-00	Label	1
24	334-7979-00	RF162 Marker Ident	1
25	337-3286-01	Power Supply Shield	1
26	337-3654-00	ECB Shield, small bottom	4
27	337-3666-00	ECB Shield, large top	2
28	337-3667-00	ECB Shield, large bottom	2
29	337-3668-00	ECB Shield, small top	4
30	671-0572-01	Power Supply ECB	1
31	671-1844-00	RF162 ECB	1

Option 03 Add these parts:

03-1	119-4082-00	321 MHz Filter	1
03-2	174-2381-00	RF Cable	1

Standard Accessories

32	012-0076-00	Cable Assy	2
33	070-8046-00	RF162 Instruction Manual	1
34	159-0019-00	Fuse, 1 Amp	1
35	159-0023-00	Fuse, 2 Amp	1
36	161-0123-00	Power Cord, 115 Vac 60 Hz	1
37	351-0104-03	Chasis Track, Instrument (1LH, 1RH)	1 set
38	351-0751-01	Chasis Track, Cabinet (1LH, 1RH)	1 set

Optional Accessories

39	161-0104-06	A1 Universal European	220 V/ 6A, 50 Hz	1
40	161-0104-07	A2 United Kingdom	240 V/ 6A, 50 Hz	1
41	161-0135-00	A3 Australian	240 V/ 6A, 50 Hz	1

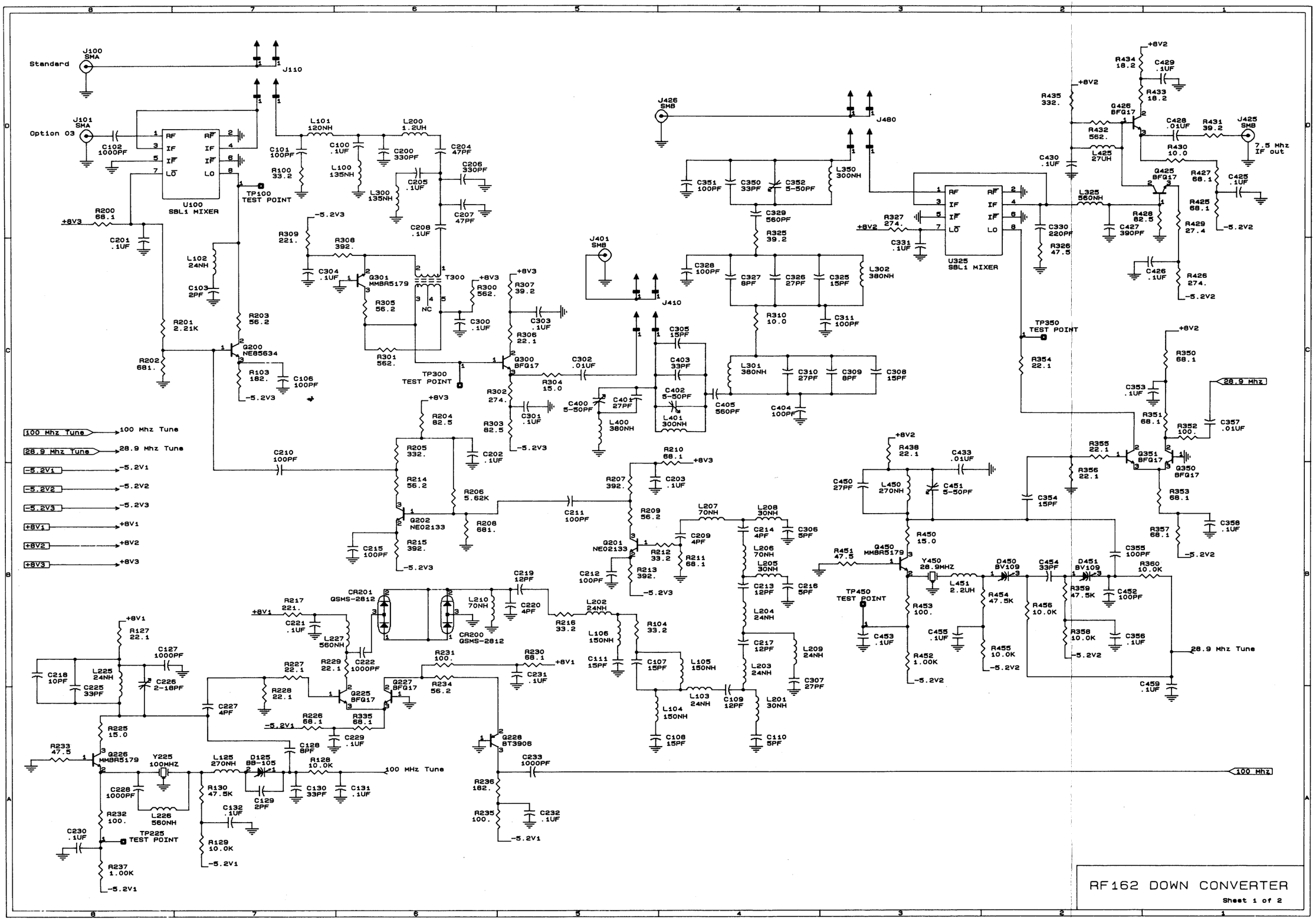
Standard
J100 SMA
J110
Option 03
J101 SMA
C102 1000PF
U100 SBL1 MIXER
TP100 TEST POINT
+8V3
R200 68.1
C201 .1UF
L102 24NH
C103 2PF
R201 2.21K
R202 681.
R203 56.2
Q200 NE85634
R103 182.
C106 100PF
-5.2V3
L101 120NH
C101 100PF
C100 .1UF
R100 33.2
L100 135NH
L200 1.2UH
C200 330PF
L300 135NH
C204 47PF
C205 .1UF
C206 330PF
C207 47PF
C208 .1UF
R309 221.
R308 392.
C304 .1UF
Q301 MMBR5179
R305 56.2
T300
NC
R300 562.
C300 .1UF
R301 562.
TP300 TEST POINT
R307 39.2
C303 .1UF
R306 22.1
Q300 BFG17
C302 .01UF
R304 15.0
R302 274.
R303 82.5
C301 .1UF
-5.2V3
R204 82.5
C210 100PF
R205 332.
C202 .1UF
R214 56.2
R206 5.62K
Q202 NE02133
R208 681.
C215 100PF
R215 392.
-5.2V3
100 Mhz Tune
28.9 Mhz Tune
-5.2V1
-5.2V2
-5.2V3
+8V1
+8V2
+8V3
J426 SMB
J480
C351 100PF
C350 33PF
C352 5-50PF
L350 300NH
C329 560PF
R325 39.2
C328 100PF
C327 8PF
C326 27PF
C325 15PF
L302 380NH
R310 10.0
C311 100PF
L301 380NH
C310 27PF
C309 8PF
C308 15PF
C404 100PF
J401 SMB
J410
C305 15PF
C403 33PF
C402 5-50PF
L401 300NH
C405 560PF
C400 5-50PF
C401 27PF
L400 380NH
R210 68.1
C203 .1UF
R207 392.
R209 56.2
Q201 NE02133
R212 33.2
R211 68.1
R213 392.
C212 100PF
-5.2V3
C211 100PF
L207 70NH
L208 30NH
C209 4PF
C214 4PF
C306 5PF
L206 70NH
L205 30NH
C213 12PF
C216 5PF
L204 24NH
C217 12PF
L209 24NH
L203 24NH
C307 27PF
L201 30NH
C110 5PF
C219 12PF
C220 4PF
L202 24NH
R216 33.2
R104 33.2
L106 150NH
C111 15PF
C107 15PF
L105 150NH
L103 24NH
C109 12PF
L104 150NH
C108 15PF
CR201 QSMS-2812
CR200 QSMS-2812
L210 70NH
R217 221.
C221 .1UF
L227 560NH
R229 22.1
C222 1000PF
R227 22.1
R228 22.1
Q225 BFG17
R231 100.
R230 68.1
C231 .1UF
R234 56.2
Q227 BFG17
R226 68.1
R335 68.1
C229 .1UF
-5.2V1
Q228 BT3906
C233 1000PF
R236 182.
R235 100.
C232 .1UF
-5.2V1
R127 22.1
C127 1000PF
C218 10PF
L225 24NH
C225 33PF
C226 2-18PF
C227 4PF
R225 15.0
R233 47.5
Q226 MMBR5179
Y225 100MHZ
C228 1000PF
L226 560NH
R232 100.
C230 .1UF
TP225 TEST POINT
R237 1.00K
-5.2V1
C128 8PF
L125 270NH
D125 BB-105
R128 10.0K
C129 2PF
C130 33PF
C131 .1UF
R130 47.5K
C132 .1UF
R129 10.0K
-5.2V1
100 MHz Tune
100 Mhz
J425 SMB
7.5 Mhz IF out
R434 18.2
C429 .1UF
R433 18.2
Q426 BFG17
R435 332.
R432 562.
C428 .01UF
R431 39.2
R430 10.0
C430 .1UF
L425 27UH
Q425 BFG17
R427 68.1
C425 .1UF
R425 68.1
R428 82.5
R429 27.4
-5.2V2
L325 560NH
C427 390PF
C426 .1UF
R426 274.
R327 274.
C331 .1UF
U325 SBL1 MIXER
C330 220PF
R326 47.5
TP350 TEST POINT
R354 22.1
R350 68.1
C353 .1UF
R351 68.1
R352 100.
C357 .01UF
R355 22.1
Q351 BFG17
Q350 BFG17
R356 22.1
R353 68.1
C354 15PF
C358 .1UF
R357 68.1
-5.2V2
R438 22.1
C433 .01UF
C450 27PF
L450 270NH
C451 5-50PF
R450 15.0
R451 47.5
Q450 MMBR5179
Y450 28.9MHZ
L451 2.2UH
D450 BV109
C454 33PF
D451 BV109
R360 10.0K
C355 100PF
TP450 TEST POINT
R453 100.
C453 .1UF
R454 47.5K
R456 10.0K
R359 47.5K
C452 100PF
C455 .1UF
R455 10.0K
-5.2V2
R358 10.0K
C356 .1UF
R452 1.00K
-5.2V2
C459 .1UF
RF162 DOWN CONVERTER
Sheet 1 of 2

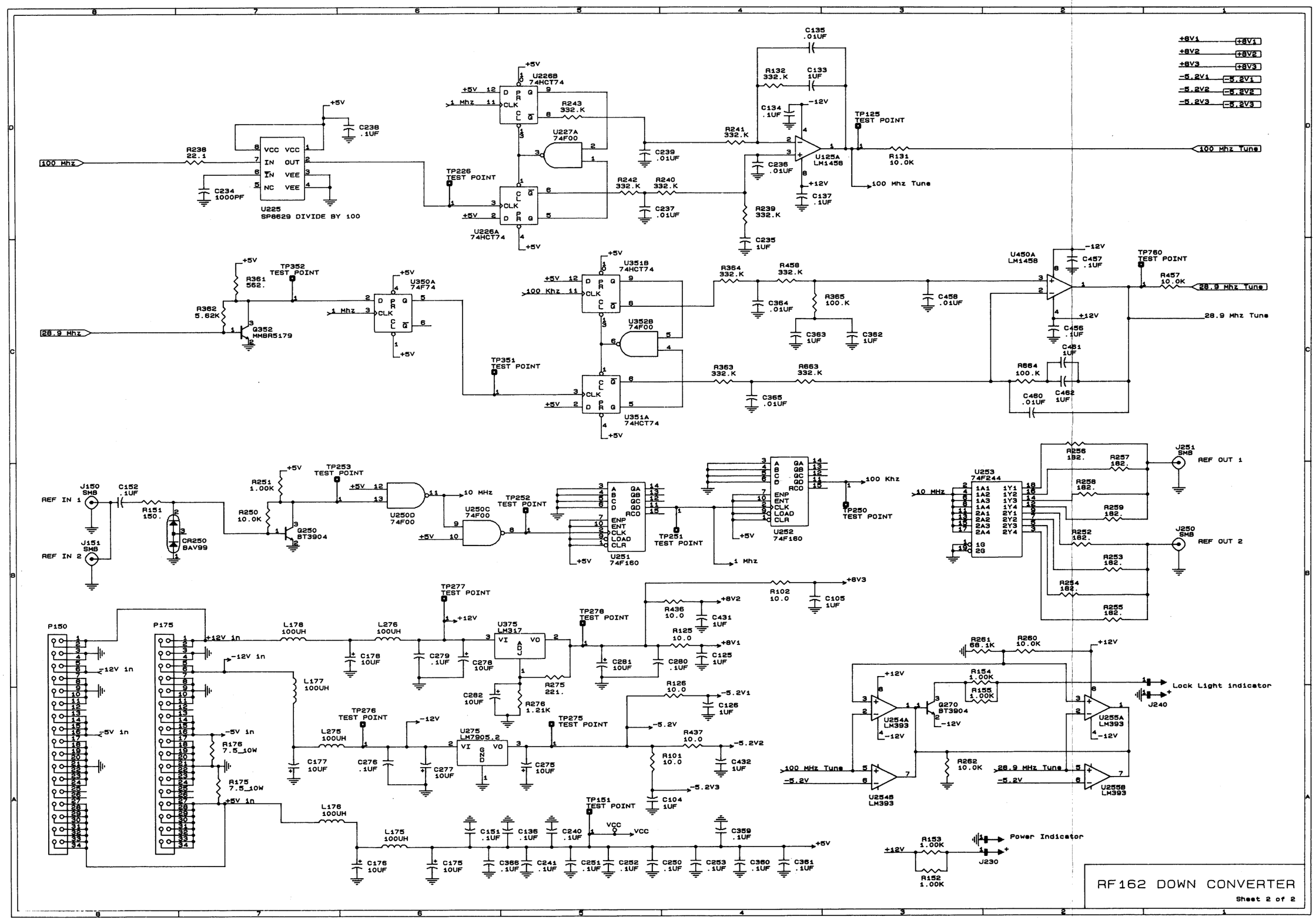
+8V1
+8V2
+8V3
-5.2V1
-5.2V2
-5.2V3
100 Mhz
R238 22.1
C238 .1UF
C234 1000PF
U225 SP8629 DIVIDE BY 100
VCC VCC IN OUT IN VEE NC VEE
U226B 74HCT74
U226A 74HCT74
U227A 74F00
TP226 TEST POINT
1 Mhz
R243 332.K
R242 332.K
R240 332.K
C239 .01UF
C237 .01UF
R241 332.K
C135 .01UF
R132 332.K
C133 1UF
C134 .1UF
C236 .01UF
R239 332.K
C235 1UF
U125A LM1458
TP125 TEST POINT
R131 10.0K
100 Mhz Tune
C137 .1UF
28.9 Mhz
R361 562.
R362 5.62K
Q352 MMBR5179
TP352 TEST POINT
U350A 74F74
U351B 74HCT74
U352B 74F00
U351A 74HCT74
100 Khz
TP351 TEST POINT
R364 332.K
R458 332.K
C364 .01UF
R365 100.K
C363 1UF
C362 1UF
C458 .01UF
R363 332.K
R663 332.K
C365 .01UF
U450A LM1458
C457 .1UF
C456 .1UF
TP760 TEST POINT
R457 10.0K
28.9 Mhz Tune
C461 1UF
R664 100.K
C460 .01UF
C462 1UF
J150 SMB
REF IN 1
J151 SMB
REF IN 2
C152 .1UF
R151 150.
CR250 BAV99
R251 1.00K
R250 10.0K
Q250 BT3904
TP253 TEST POINT
U250D 74F00
10 MHz
U250C 74F00
TP252 TEST POINT
U251 74F160
TP251 TEST POINT
U252 74F160
TP250 TEST POINT
U253 74F244
R256 182.
R257 182.
R258 182.
R259 182.
R252 182.
R253 182.
R254 182.
R255 182.
J251 SMB
REF OUT 1
J250 SMB
REF OUT 2
P150
P175
+12V in
-12V in
-5V in
R176 7.5_10W
R175 7.5_10W
L178 100UH
L276 100UH
L177 100UH
L275 100UH
L176 100UH
L175 100UH
C178 10UF
C279 .1UF
C278 10UF
C282 10UF
C177 10UF
C276 .1UF
C277 10UF
C176 10UF
C175 10UF
TP277 TEST POINT
U375 LM317
VI VO ADJ
TP278 TEST POINT
R275 221.
R276 1.21K
C281 10UF
C280 .1UF
R436 10.0
C431 1UF
R102 10.0
C105 1UF
R125 10.0
C125 1UF
R126 10.0
C126 1UF
TP276 TEST POINT
U275 LM7905.2
VI GND VO
TP275 TEST POINT
C275 10UF
R437 10.0
C432 1UF
R101 10.0
C104 1UF
TP151 TEST POINT
VCC
C151 .1UF
C136 .1UF
C240 .1UF
C366 .1UF
C241 .1UF
C251 .1UF
C252 .1UF
C250 .1UF
C253 .1UF
C359 .1UF
C360 .1UF
C361 .1UF
R261 68.1K
R260 10.0K
R154 1.00K
R155 1.00K
Q270 BT3904
U254A LM393
U255A LM393
U254B LM393
U255B LM393
R262 10.0K
100 MHz Tune
28.9 MHz Tune
-5.2V
Lock Light indicator
J240
R153 1.00K
R152 1.00K
J230
Power Indicator
RF162 DOWN CONVERTER
Sheet 2 of 2

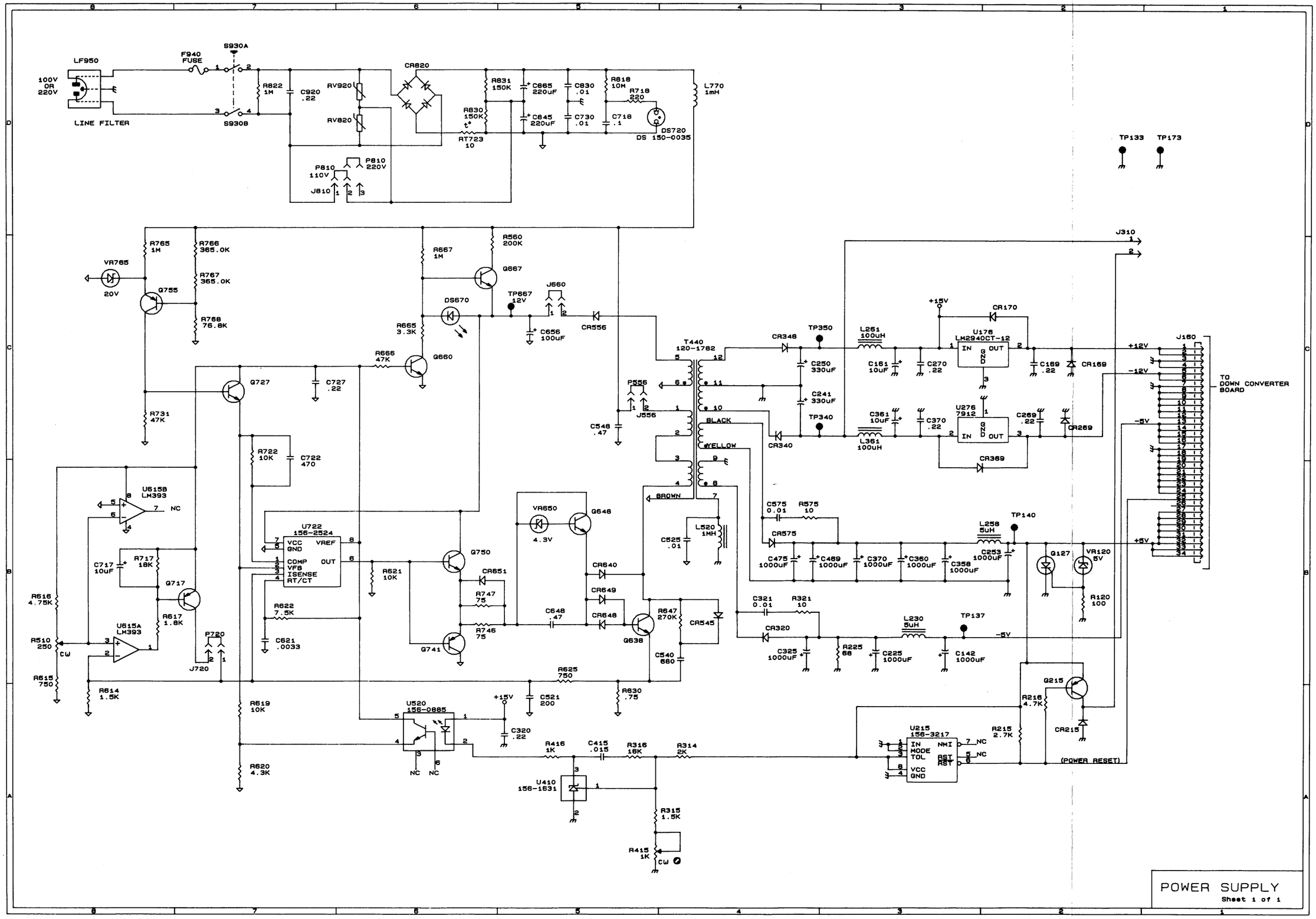

POWER SUPPLY

Sheet 1 of 1

CONNECTORS and INDICATORS

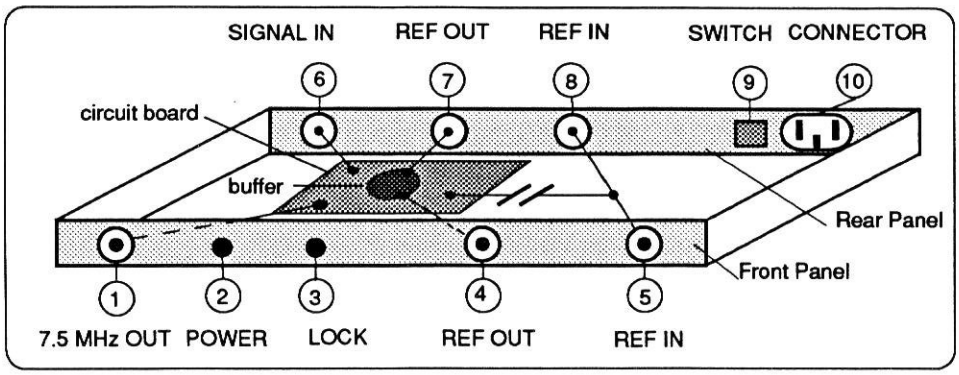

Fig. A1, RF162 indicators and connectors.

1. 7.5 MHz IF OUT — This BNC connector provides the RF162 output that is the input to the 3052.

2. POWER Indicator — When power is applied to the RF162, this green indicator should light.

3. LOCK Indicator — When both oscillators are locked to the reference signal, this green indicator should light.

4. REF OUT (front) — This BNC connector provides a buffered 10 MHz output that is derived from the Reference In signal.

5. REF IN (front) — Apply a 10 MHz reference signal to this or the rear panel REF IN connector. A reference signal is required to lock the two RF162. oscillators.

> NOTE
> The two REF IN connectors are direct coupled to each other and capacitor coupled to the internal circuitry.

> CAUTION
> Do not apply two separate reference signals.

6. SIGNAL IN — The IF signal from the Spectrum Analyzer or receiver is applied to this BNC connector.

7. REF OUT (rear) — This BNC connector provides a buffered 10 MHz output that is derived from the reference in signal.

8. REF IN (rear) — Apply a 10 MHz reference signal to this or the front panel REF IN connector. A reference signal is required to lock the two RF162. oscillators.

9. Power Switch — This is the power ON/OFF switch for this instrument.

10. Power Connector — This is the power connector for this instrument.

FREQUENCY REVERSAL (swapping)

Definition

Frequency reversal is a mixer phenomena that occurs when the input signal frequencies are lower than the local oscillator frequency. The condition causes input frequencies that are *greater* than center frequency to appear on a display as being *less* than center frequency and input frequencies that are *less* than center frequency to appear on a display as being *greater* than center frequency This condition is often referred to as *Frequency Swapping.*

Standard Configuration

With the RF162 in Standard configuration, A reversal occurs in the second mixer because the input center frequency is 21.4 MHz and the local oscillator frequency is 28.9 MHz. See Figure AB1.

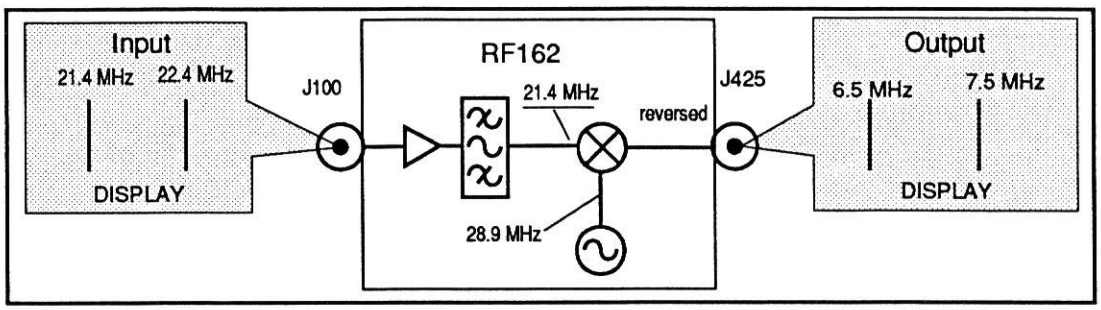

Fig. AB1,Standard Configuration, Second Mixer Reversal.

Option 03

In Option 03 configuration (see Figure AB2) the center frequency of the IF applied to J101 is 321.4 MHz. This is the input to the first mixer. The local oscillator input to the first mixer is 300 MHz. Frequency reversal does not occur. The 21.4 MHz output of the first mixer is applied to the input of the second mixer whose oscillator input is 28.9 MHz; frequency reversal occurs just as in the Standard configuration.

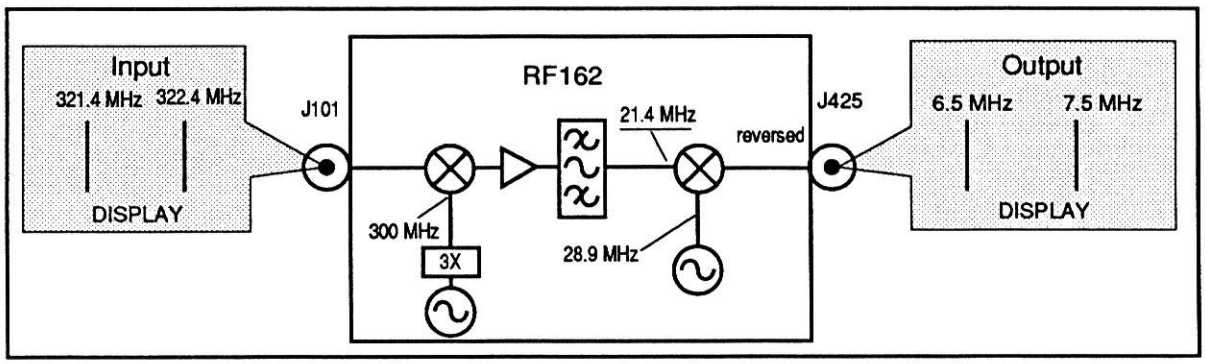

Fig. AB2, Option 03 Configuration.

Circuit Configuration, STANDARD or OPTION 03

Standard Configuration

In Standard configuration, the RF162 is used to process a 21.4 MHz IF from the receiver. The Rear Panel INPUT BNC is conncted to J100.

Option 03 Configuration

In Option 03 configuration, the RF162 is used to process a 321.4 MHz IF. The Rear Panel INPUT is connected to a 321.4MHz band pass filter that is in turn connected to J101. See Figure A1.

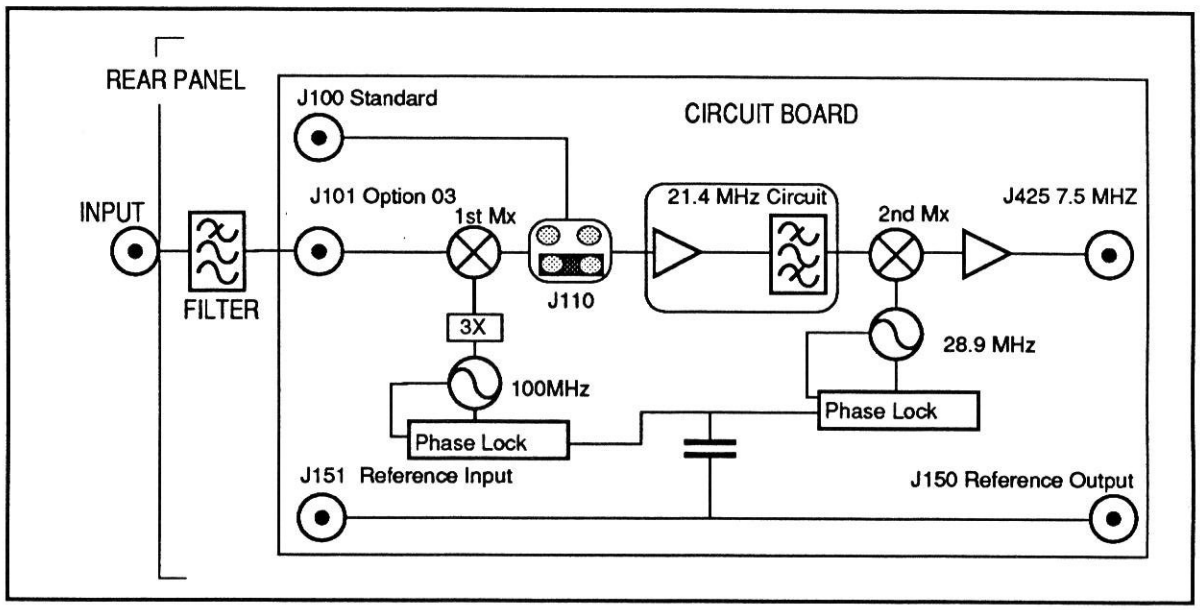

Fig. AC1, RF162 Configured for Option 03 operation.

J110 Selector

J110 is an assembly of square pins that provides the means to configure the RF162 circuit board for Standard or Option 03 operation. See Figure AC2 for placement of shorting bar.

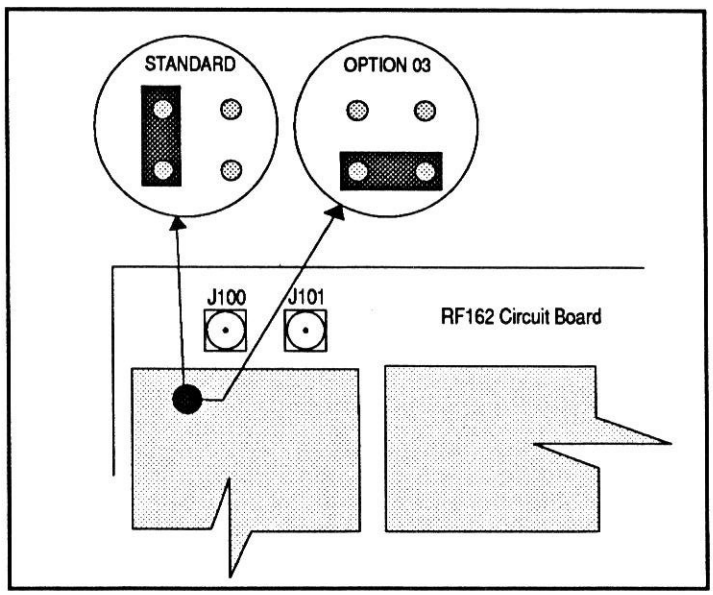

Fig. AC2, Shorting Bar placement, Standard of Option 03.