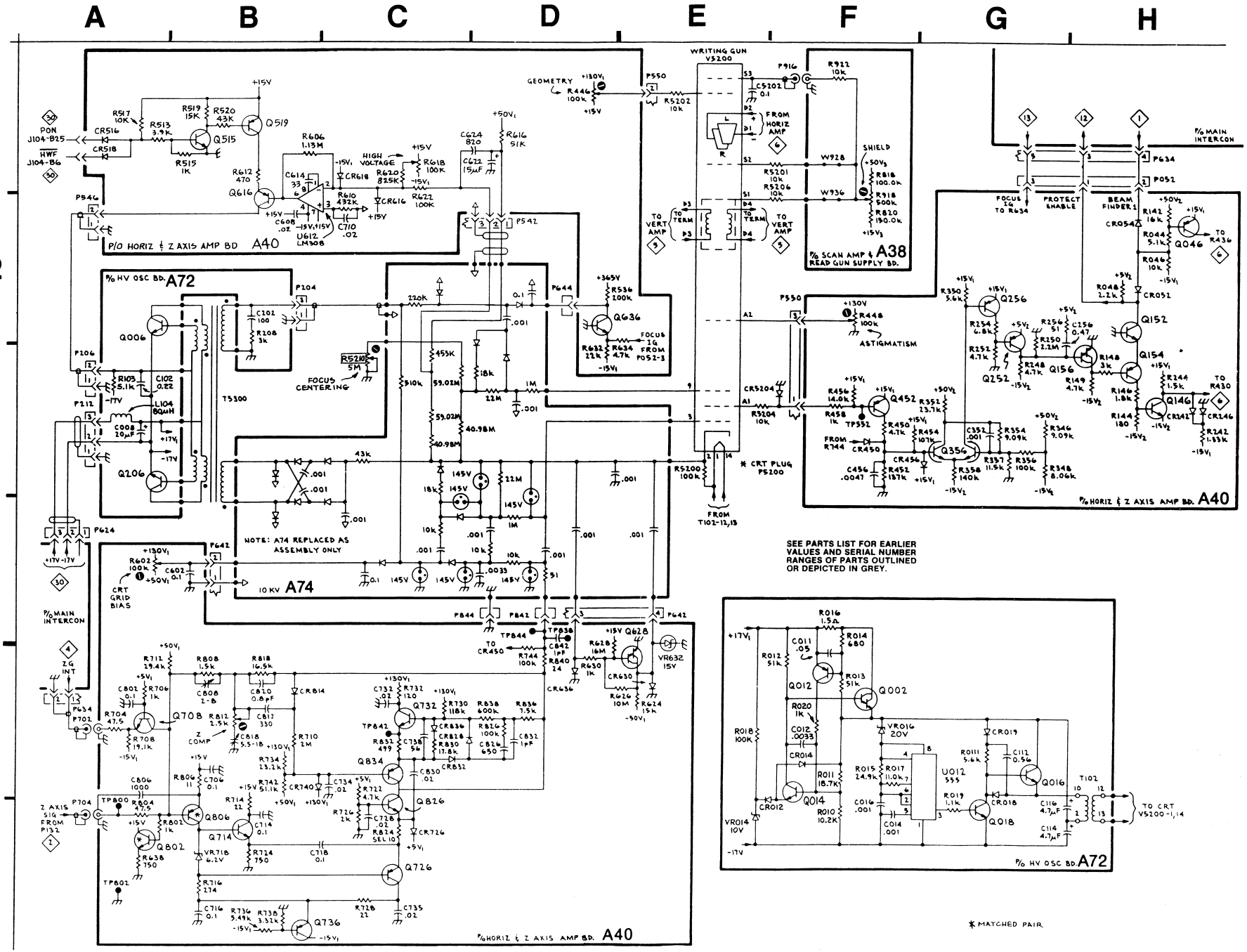

Z-AXIS/HIGH VOLTAGE (SN B100767 & up)

7912AD

2385-134
REV APR 1982

(SN B100767 & UP) Z-AXIS/HIGH VOLTAGE 7