INSTRUCTION MANUAL

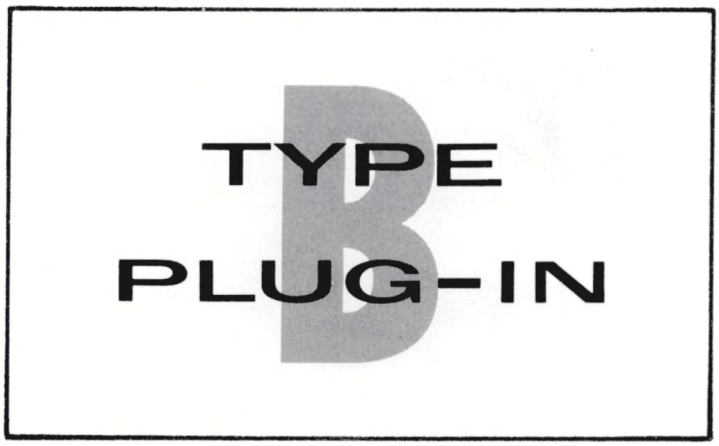

Tektronix, Inc.
S.W. Millikan Way ● P. O. Box 500 ● Beaverton, Oregon ● Phone MI 4-0161 ● Cables: Tektronix

Tektronix International A.G.
Terrassenweg 1A ● Zug, Switzerland ● PH. 042-49192 ● Cable: Tekintag, Zug Switzerland ● Telex 53.574

070-219

http://manoman.sqhill.com

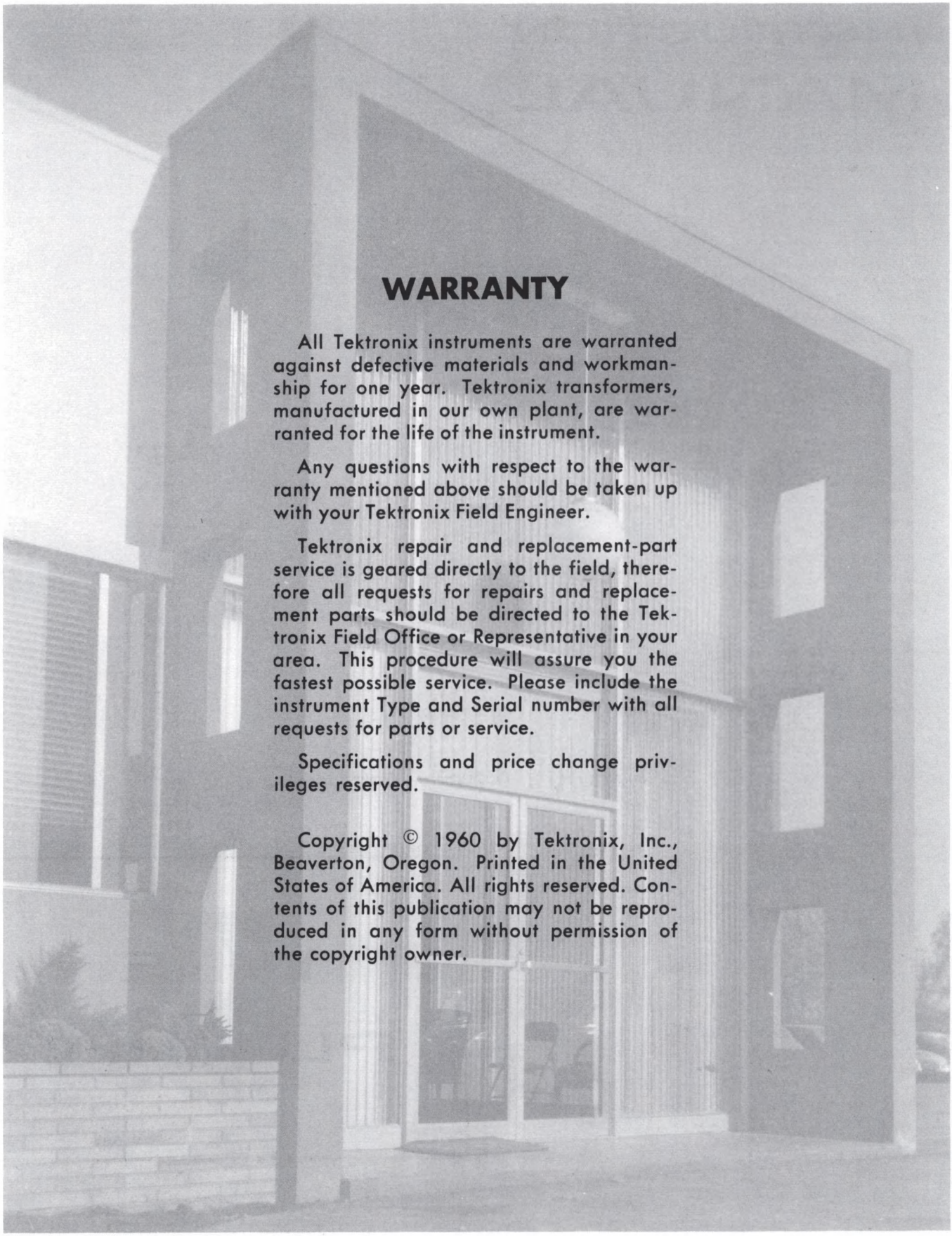

WARRANTY

All Tektronix instruments are warranted against defective materials and workmanship for one year. Tektronix transformers, manufactured in our own plant, are warranted for the life of the instrument.

Any questions with respect to the warranty mentioned above should be taken up with your Tektronix Field Engineer.

Tektronix repair and replacement-part service is geared directly to the field, therefore all requests for repairs and replacement parts should be directed to the Tektronix Field Office or Representative in your area. This procedure will assure you the fastest possible service. Please include the instrument Type and Serial number with all requests for parts or service.

Specifications and price change privileges reserved.

Copyright © 1960 by Tektronix, Inc., Beaverton, Oregon. Printed in the United States of America. All rights reserved. Contents of this publication may not be reproduced in any form without permission of the copyright owner.

http://manoman.sqhill.com

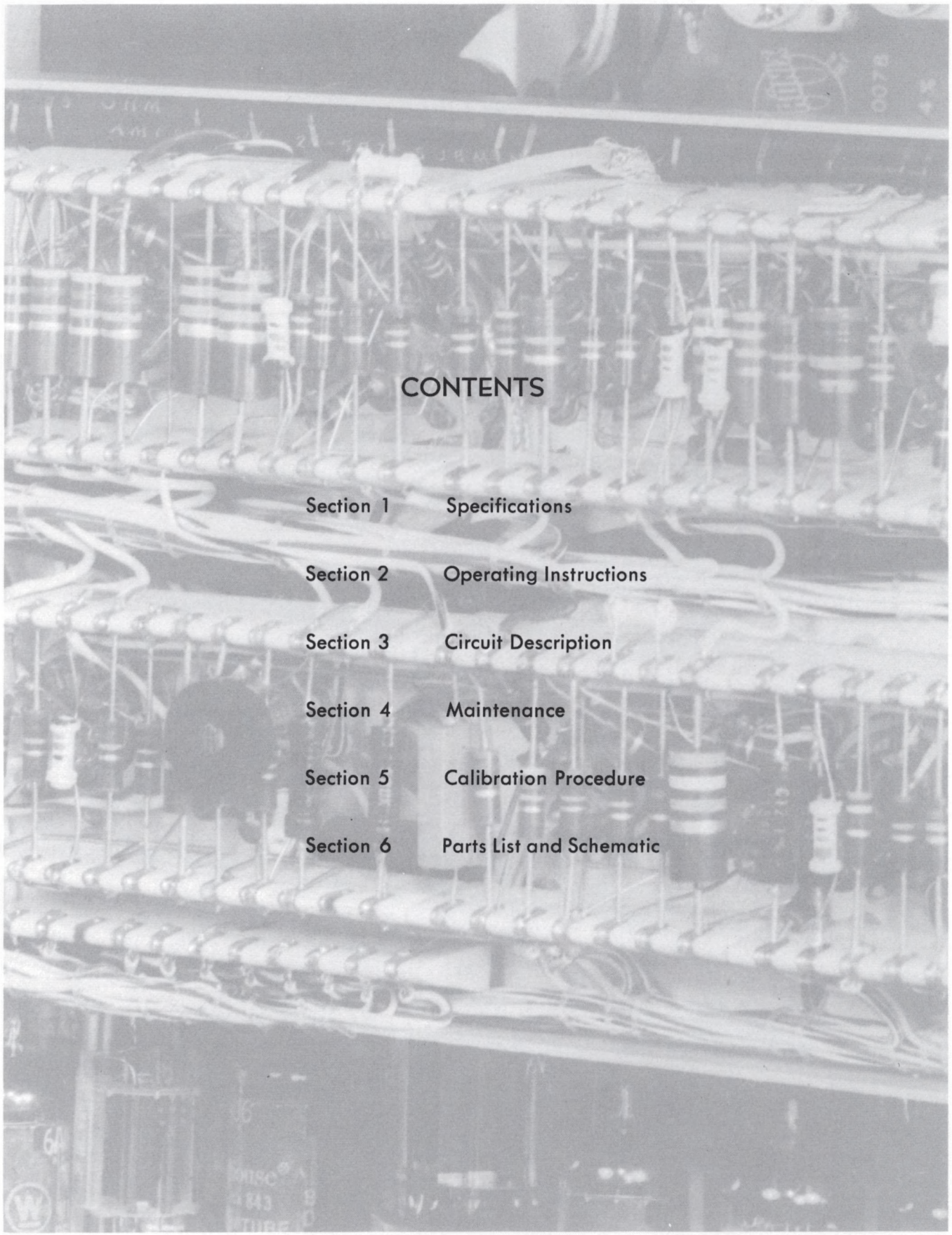

CONTENTS

Section 1 Specifications

Section 2 Operating Instructions

Section 3 Circuit Description

Section 4 Maintenance

Section 5 Calibration Procedure

Section 6 Parts List and Schematic

http://manoman.sqhill.com

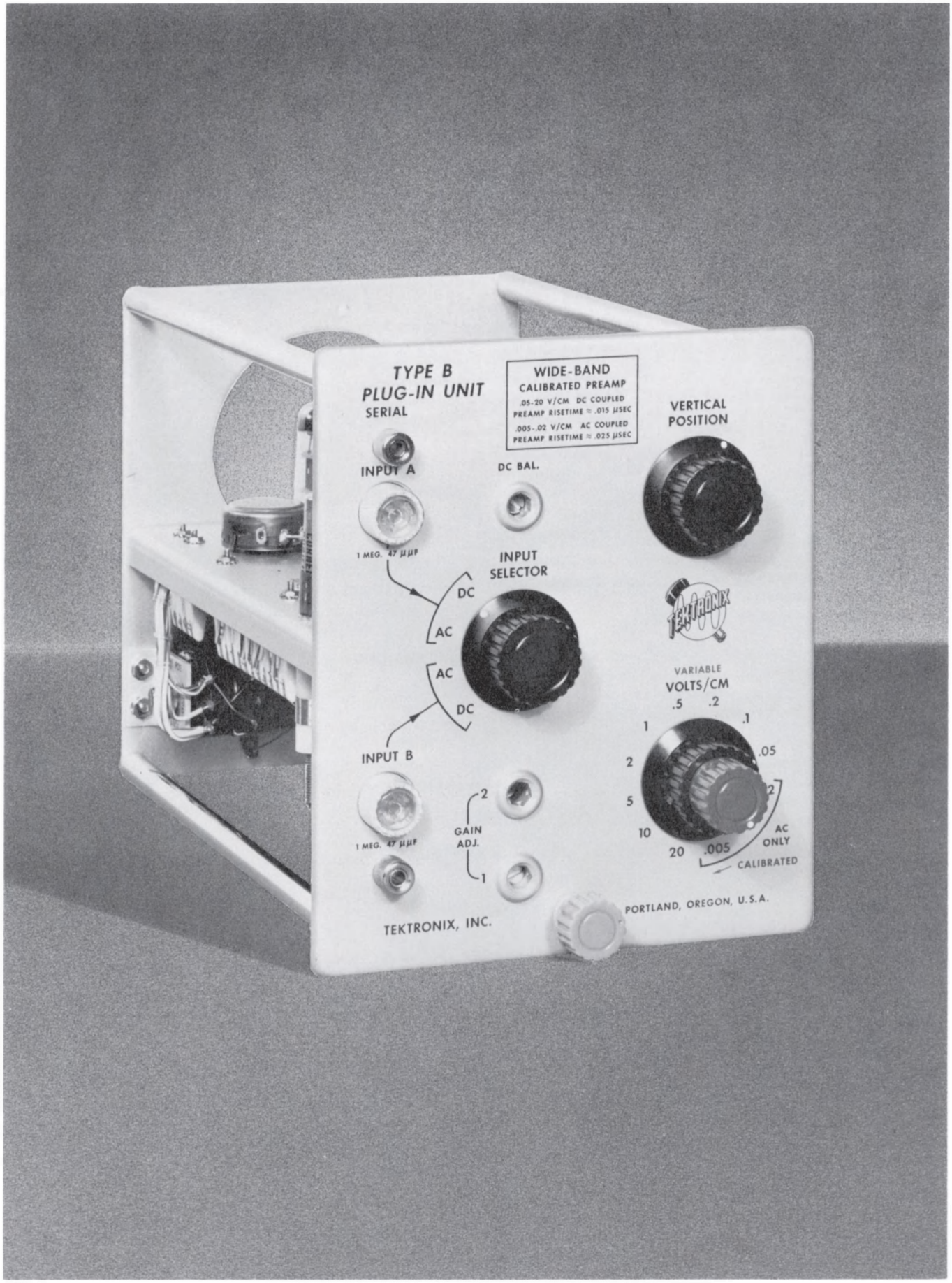

http://manoman.sqhill.com

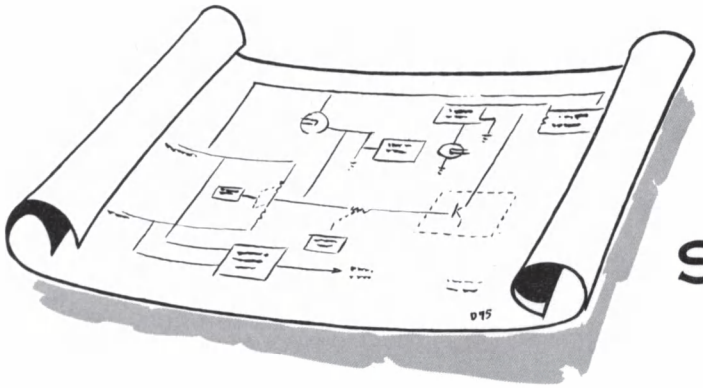

SECTION 1

SPECIFICATIONS

General

The Type B Plug-In Unit is a wide-band, high-gain calibrated preamp, designed for use with Tektronix Type 530-, 540- and 550 Series Oscilloscopes. The unit contains a dc amplifier similar to that in the Type A Unit preceded by a wide-band ac amplifier.

Mechanical Specifications:

Construction—Aluminum-alloy chassis.

Finish—Photo-etched anodized panel.

Weight—3½ lbs.

Type B Specifications

Instrument Used With	Transient Response .05 v to 20 v/cm		Transient Response .005 v to .02 v/cm	
	Risetime	Pass Band*	Risetime	Pass Band*
541, 541A, 543, 545, 545A, 555	.018 μsec	DC—20 mc 2 cps—20 mc ac	.03 μsec	3 cps—12 mc
551	.02 μsec	DC—18 mc	.03 μsec	3 cps—12 mc
531, 531A, 533, 535, 535A	.035 μsec	DC—10 mc 2 cps—10 mc ac	.04 μsec	3 cps—9 mc
532	.07 μsec	DC—5 mc 2 cps—5 mc ac	.07 μsec	3 cps—5 mc

*** Down not more than 3 db at indicated limits.**

Plug-In Unit Amplifier

Risetime at .05 to 20 v/cm—.01 μsec.

Risetime at .005 to .02 v/cm—.03 μsec.

Deflection Factor:

.05 v/cm to 50 v/cm dc.

.005 v/cm to 50 v/cm ac.

Signal Inputs—Two signal inputs with more than 60 db isolation.

Step Attenuator:

Twelve positions, calibrated, from .005 v/cm to 20 v/cm, accurate within 3% when set on any one step.

Maximum Allowable Combined DC and Peak AC

Input Voltage—600 V.

Input Impedance: —1 megohm, 47 μμf.

With P410 probe—10 megohms, 11 μμf.

With P510 probe—10 megohms, 14 μμf.

With P6000 prove—10 megohms, 11.5 μμf-14.5 μμf.

FUNCTIONS OF CONTROLS AND CONNECTORS

INPUT A INPUT B	Separate UHF coax connectors to the preamp by way of the INPUT SELECTOR switch.
INPUT SELECTOR	Four-position switch to select either of the two inputs and the type of input coupling.
DC BAL	Screwdriver control to adjust the amplifier balance so the trace does not shift as the VARIABLE control is rotated.
VERTICAL POSITION	Control to position the trace vertically.
GAIN ADJ. 1	Screwdriver control to set the basic gain of the dc amplifier.
GAIN ADJ. 2	Screwdriver control to set the gain of the ac amplifier to 10.
VOLTS/CM	Twelve-position switch to select the calibrated vertical-deflection sensitivities.
VARIABLE	Control to vary the gain over a range of about 2½ to 1.

Accessories

2—Instruction Manuals

http://manoman.sqhill.com

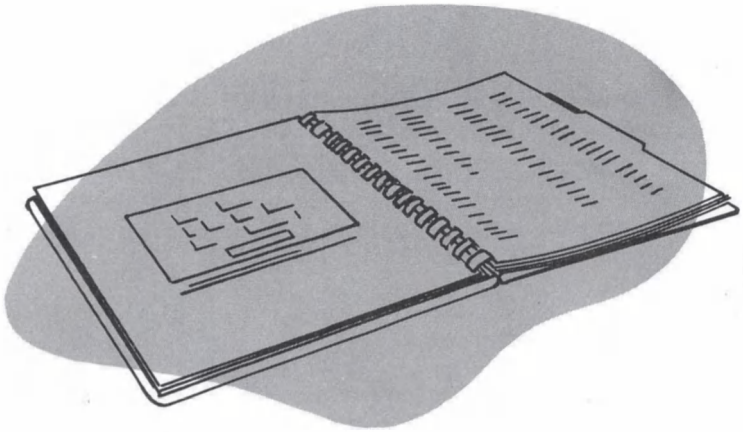

SECTION 2

OPERATING INSTRUCTIONS

General

The Type B Plug-In Unit is designed to operate as a preamplifier for a Tektronix 530-Series, 540-Series or 550-Series Oscilloscope. We assume that it will be operated in that manner in the following instructions.

Input Connections

Be careful when you make connections to the preamp INPUT connectors that the external circuitry does not cause deterioration of the waveform. Improper termination of cables may cause ringing or loss of frequency response. If you use unshielded leads, keep them short as possible to minimize hum. Leads which pass near the cathode-ray-tube screen may pick up some ripple from the high-voltage power supply. If this occurs try relocating the leads or use additional shielding.

Two cables can be connected to the preamp at once. You can then select the signal on either cable with the INPUT SELECTOR switch. However, if one signal is very much larger than the other, some crosstalk may occur and the cable having the strong signal should be disconnected.

Probe Information

Early Type B Units were furnished with P400-series or P500-series probes. P500-series probes are usable in the range from DC to 10 megacycles. P400-Series probes should be used with 540- and 550-series oscilloscopes where frequencies in excess of 10 megacycles are likely to be encountered.

P400-series probe bodies are $\frac{3}{4}$-inch in diameter. They are molded of fiberglass-reinforced alkyd and have on internal brass shield. Noses are color-coded to indicate attenuation ratios. Length is $3\frac{3}{4}$ inches without tip. Two Tektips were furnished with each probe—a straight tip and freely-rotating hooked tip. The tips increase probe length by about one inch, adding less than 0.5 $\mu\mu$f to the input capacitance. P400-series probes have a 42-inch coaxial cable with uhf connector.

Probe Adjustment

The Type P6000 probe may be used with either the 530- or 540-Series Oscilloscopes. Be sure to check the adjustment of the probe when you first connect it to the plug-in. Touch the probe tip to the calibrator output connector and display several cycles of the calibrator waveform. If the top and bottom of the displayed waveform is not flat, loosen the locking ring by turning it in a counterclockwise direction. Rotate the barrel of the probe as necessary to compensate the probe. Tighten the locking ring carefully after compensating the probe, being careful not to disturb the probe adjustment.

An adjustable capacitor compensates for slight variations in input capacitance from one instrument to another. This

PROBE CHARACTERISTICS

Probe	Color Code	Attenuation Ratio	INPUT IMPEDANCE			Insertion Loss at 30 mc (db)	Voltage Rating (Peak-to-Peak)
			Resistance (megohms)	Typical Capacitance			
				Minimum *	Maximum **		
P405	Green	5:1	5	12 $\mu\mu$f	19 $\mu\mu$f	1 to 2	600
P410	Brown	10:1	10	8 $\mu\mu$f	11 $\mu\mu$f	1	600
P420	Red	20:1	10	5.5 $\mu\mu$f	7 $\mu\mu$f	1	600
P450	Clear-Green	50:1	10	3.5 $\mu\mu$f	3.5 $\mu\mu$f	1	1000
P450-L †	Clear-Green	50:1	10	2.5 $\mu\mu$f	2.5 $\mu\mu$f	1	1000
P4100	Clear	100:1	10	2.5 $\mu\mu$f		1	1000

* When connected to instruments having 20 $\mu\mu$f input capacitance.

** When connected to instruments having 50 $\mu\mu$f input capacitance.

† Will not adjust to instrument having over 25 $\mu\mu$f input capacitance.

http://manoman.sqhill.com

capacitor is located in the probe body in the P405, P410, P420, and in the termination block at the instrument end of the cable in the P450, P450-L and P4100. It takes only a few seconds to check this adjustment, and it is a good practice to make this check each time the probe is to be used. Simply touch the probe to the oscilloscope calibrator-output terminal and observe the calibrator waveform on the screen. If necessary, adjust the trimmer for a flat top on the calibrator square wave. For critical adjustment of the P4100, a faster-rising square wave, such as the output of the Tektronix Type 104A or Type 105, should be used.

Preventative Maintenance

Regular inspection of the nose and cable fastening screws will help prevent possible mechanical damage due to twisting. A small nylon screw holds the nose in place, and an allen setscrew grips the cable firmly. Tighten these screws if they work loose.

Probe Repair

To disassemble, remove the nylon screw and loosen the allen setscrew. Slide the probe body back over the cable. Examine the layout carefully before proceeding. The center conductor of the cable is extremely fragile—be careful not to break it when removing a probe part. Replacement parts can be obtained through field offices or directly from the factory. When resoldering, it is important to get a good connection between the probe resistor and the center conductor of the cable. Reassemble the probe and tighten the screws.

Coupling

It is sometimes unnecessary or undesirable to display the dc level of the waveform. In the two AC positions of the INPUT SELECTOR switch, a capacitor in series with the input blocks the dc component of the waveform so that only the ac component is displayed.

Deflection Sensitivity

The VOLTS/CM switch inserts frequency-compensated attenuators ahead of the amplifier. The VARIABLE control provides continuous adjustment of the deflection sensitivity between the values indicated by the VOLTS/CM switch.

NOTE

The VARIABLE control must be clockwise to CALIBRATED position for the sensitivity to be as indicated by the VOLTS/CM control.

Gain Adjustment

Aging of tubes will affect the gain of the plug-in unit. After the plug-in unit has been in use for a period of time the gain adjustment should be checked. Display a calibrator waveform of 0.2 volts peak to peak with the VOLTS/CM switch in the .05 position. Adjust the GAIN ADJ. 1 control until the displayed waveform is four graticule divisions in amplitude. Be sure the VARIABLE control is turned clockwise to the CALIBRATED position before making this adjustment.

Now set the calibrator at 20 MILLIVOLTS and turn the VOLTS/CM switch to .005. Adjust the GAIN ADJ. 2 control until the amplitude of the displayed waveform is four divisions.

DC Balance Adjustment

The need for adjustment of the DC BAL control is indicated by a shift in the position of the trace as the VARIABLE control is rotated. This is caused by tube aging and the resultant shift in operating potentials. This adjustment should be made after the GAIN ADJ. control is set. Rotate the VARIABLE control back and forth and adjust the DC BAL. control until the trace position is no longer affected by rotation of the VARIABLE control.

Positioning Adjustment

The VERT POS RANGE control balances the dc output level so the full range of the front-panel positioning control can be utilized. The VERT POS RANGE control is located at the left to the rear of the plug-in unit and is accessible when the left side panel is removed. Center the VERTICAL POSITION control. Adjust the VERT POS RANGE control to center the trace on the screen.

http://manoman.sqhill.com

SECTION 3

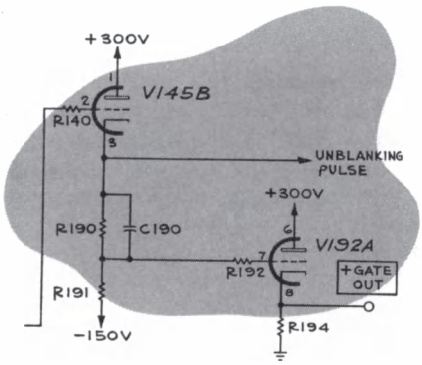

CIRCUIT DESCRIPTION

General

The Type B Plug-In Unit has a maximum sensitivity of .05 volts per centimeter dc and .005 volts per centimeter ac. The circuit consists of one stage of amplification preceded and followed by cathode followers, with an additional, ac-coupled stage inserted in the three most sensitive positions of the VOLTS/CM switch.

Input Connectors

There are two input connectors which can be switched into the input circuits by SW3022, the INPUT SELECTOR switch. This switch is wired physically so at to reduce coupling between inputs to a minimum. Blocking capacitor C3042 (C3012 S/N 101-3300) is shorted out in the DC positions ot the selector switch.

Input Attenuators

The VOLTS/CM switch inserts frequency-compensated attenuators into the input circuit. Four attenuators are used singly or in tandem pairs to produce nine fixed sensitivities. The ac-coupled preamplifier, V4302, (V3302 S/N 101-3300), is switched into the circuit in addition to the attenuators in the three most sensitive positions to give a total of twelve fixed sensitivities. Blocking capacitor C3042 (C3022 S/N 101-3300) is inserted in the AC ONLY positions of the VOLTS/DC switch. The X1 attenuation network compensates for lead inductance in the input circuits.

Preamplifier

The preamplifier stage consists of V4302 (V3302 S/N 101-3300) as a single ended pentode voltage amplifier, V4102B (V3502A S/N 101-3300) as a cathode follower driver for the amplifiers and V4102A (V3502B S/N 101-3300) as a low-impedance voltage setter for the preamplifier screen grid. R4352 (R3332 S/N 101-3300), a front-panel screwdriver control labeled GAIN ADJ. 2, adjusts the degeneration in the cathode of V4302 (V3302 S/N 101-3300) to set the gain of the stage. The chassis-mounted screwdriver control, labeled LOW FREQ. COMP. adjusts the time constant of the grid circuit coupling network. This network, in combination with the low-frequency boosting network, R4022, C4022A (S/N 3301-up) provides low-frequency compensation down to less than 50 cps.

DC Balance

The DC BAL control, R4402 (R3642 S/N 101-3300), provides an adjustable, dc grid voltage for V3552 (V4102 S/N 101-3300) so that its cathode is at the same dc potential as the cathode of V3402 (V4002 S/N 101-3300). When this control is properly set, no change in vertical positioning will result when the VARIABLE control is rotated.

Input Cathode Follower

The input cathode follower, V3252 (V3502A S/N 101-3300), isolates the input circuits from changes in capacitance as the VARIABLE control is rotated. R3282 (R4012 S/N 101-3300) is a current-limiting resistor to limit the grid current in the event an excess voltage is applied to the input.

Amplifier

The amplifier stage, V3402 and V3552 (V4002 and V4102 S/N 101-3300), is a common-cathode phase-splitter amplifier. Coils L3402 and L3582 (L4202 and L4402 S/N 101-3300) form peaking networks in the plate circuits. R3402 (S/N 3301-up) provides the current for the amplifier plates, and a tap to the heater string provides a low impedance at this point.

The VARIABLE VOLTS/CM control, R3512 (R4062 S/N 101-3300), varies the gain over a $2\frac{1}{2}$-to-1 ratio by varying the degeneration in the cathode circuit. R3542 (R4102 S/N 101-3300), labeled GAIN ADJ. 1, varies the current in this stage to set the gain to agree with the front-panel calibration.

Vertical positioning is produced by two dual potentiometers connected to the plates of the amplifier so that current through one plate load is increased as current through the other plate load is decreased. Since the amplifier is dc coupled beyond this point, the change in plate voltage which occurs changes the position of the trace on the cathode-ray tube. The current drawn by these potentiometers is added to the heater string to provide the additional current required by V4302 (S/N 3301-up).

http://manoman.sqhill.com

Output Cathode Followers

Output cathode followers are used to drive the capacitance of the interconnecting plug and main-amplifier input circuit. The cathode follower circuit is modified by resistors in the plate circuits and by capacitors cross-connected from the plates to the opposite cathodes. This modification improves the high-frequency balance of the plug-in unit.

The H.F. PEAKING control, R3872 (S/N 3301-up) varies the current in the cathode followers. This changes the impedance at the cathodes and changes the effect of the series peaking coils, L3842 and L3942 (L4512 and L4562 S/N 101-3300), tied to these cathodes.

http://manoman.sqhill.com

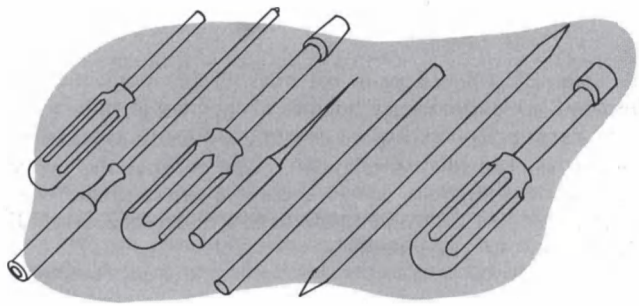

SECTION 4

MAINTENANCE

PARTS ORDERING AND REPLACEMENT

Instruction Manual

A Tektronix instruction manual usually contains hand-made changes to diagrams and parts list, and sometimes text. These changes are in general appropriate only to the instrument the manual was prepared for. These hand-made corrections show changes to the instrument that have been made after the printing of the manual.

There is a serial number on the frontispiece and on the warranty page of this manual. This is the serial number of your instrument. Be sure the manual number matches the instrument number when you order parts.

NOTE

Always include the instrument type and SERIAL NUMBER in any correspondence regarding the instrument.

Standard Components

Tektronix will supply replacement components at current net prices. However, since most of the components are standard electronic and radio parts you can probably obtain them locally faster than we can ship them to you from the factory in Portland, Oregon. Be sure to consult the instruction manual to see that tolerances are required.

Selected Components

We specially select some of the components, whose values must fall within prescribed limits, by sorting through our regular stocks. The components so selected will have standard RETMA color coding showing the value and tolerance of the stock they were selected from, but they will not in general be replaceable from dealer's stocks.

Checked Tubes

To obtain maximum reliability and performance we check some of the vacuum tubes in our instruments for such characteristics as microphonics, balance, transconductance, etc. We age other tubes to stabilize their characteristics. Since there are no well defined standards of tube performance we have established our own arbitary standards and have developed equipment to do this checking. These checked tubes can be purchased through our local Field Engineering Offices or directly from the factory in Portland, Oregon.

Tektronix Manufactured Parts

Tektronix manufactures almost all of the mechanical parts and some components used in the instrument. If you order a mechanical part be sure to describe the part completely to prevent any unnecessary delay in filling your order. When you have any guestions about mechanical parts or Tektronix manufactured components contact our nearest Field Engineering Office or write to the Field Engineering Department at the factory in Portland, Oregon.

GENERAL INFORMATION

Color Coding

We use color-coded wires in the instruments to help identify the various circuits. These wires will be either a solid color or will be a solid color (including black and white) with one or more colored stripes. The colored stripes are "read" in the same manner as the RETMA resistor color code. In the case of multiple stripes the wide stripe is read first.

Wires carrying positive regulated-power-supply voltages are white and the stripes indicate the supply voltage. For example, the +225-v supply bus will be coded red-red-brown (2-2-1) giving two significant figures and the decimal multiplier.

The negative-supply bus wires are black and the stripes indicate the supply voltage. For example, our most common negative-supply voltage is —150 v and is carried by a black wire coded brown-green-brown (1-5-1).

The mains-voltage leads to the power transformer are yellow and coded brown-brown-brown (1-1-1).

The tube heater leads are white and coded 6-1, 6-2, 6-3, etc., not to indicate that the voltages are different but to differentiate between circuits.

In other respects the color coding will vary from instrument to instrument. In general all signal-carrying leads are white and coded with a single colored stripe. In a few places where the number of leads exceeded the capabilities of single-stripe coding we have used solid-color leads.

http://manoman.sqhill.com

Soldering Precautions

The solder used on the ceramic terminals of this instrument must contain a small percentage of silver. Repeated use of ordinary tin-lead solder will dissolve the fused bond of silver that makes the solder adhere to the porcelain, especially if the soldering iron is quite hot.

A quantity of the silver-bearing holder that we use at the factory is attached to each major instrument having ceramic strips. This solder, containing approximately 3% silver, is not readily available through regular channels. If you need additional silver-bearing solder for maintenance purposes you can purchase it from Tektronix in one-pound spools.

TROUBLE-SHOOTING PROCEDURE

Troubleshooting of plug-in units is somewhat complicated by the need to determine whether the trouble observed is in the plug-in unit or in the oscilloscope. Many troubles can be quickly isolated by substituting another plug-in unit and looking for the same indications. Among the troubles which fall into this category are insufficient gain, inability to position the trace, noise, unbalance, and severe waveform distortion. Minor waveform distortions such as might be caused by high-frequency peaking coils or delay-line trimmers can be isolated by this method only by substituting another plug-in unit of equal or superior bandwidth and checking for the same distortion.

Noise and unbalance problems can also be isolated by connecting a jumper from pin 1 to pin 3 of the interconnecting plug. If the trouble remains, it is probably not in the plug-in unit.

Most troubles are caused by tube failures and you can frequently find them by finding the bad tube and replacing it with a good one. It is a good practice to inspect components in the circuit with the bad tube for possible overheating as a result of the tube failure. One way to find bad tubes is to try replacing suspected tubes with good ones.

http://manoman.sqhill.com

SECTION 5

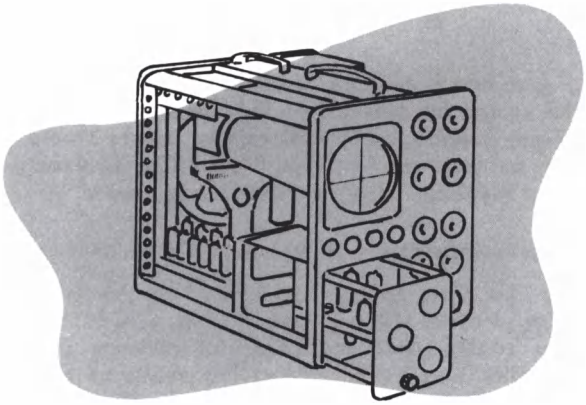

CALIBRATION PROCEDURE

General

The Type B is a stable instrument and should not require frequent calibration. However, it is sometimes necessary, after tube replacements or extensive maintenance work to check the adjustment of certain important controls to insure precise and accurate operation of the plug-in unit.

Equipment Required

Before calibrating your Type B, be sure that the Type 530- or 540-Series Oscilloscope you are using has been checked for power supply outputs, power supply ripple and regulation, vertical amplifier gain, vertical amplifier band pass and calibrator accuracy.

Other equipment required includes:

Type 190 or 190A Constant-Amplitude Signal Generator or equivalent, providing constant amplitude sine waves from about 50 kc to 30 mc with output amplitude constant within ±2%.

Type 105 Square-Wave Generator or equivalent with frequency range of about 25 cycles to 1 mc, rise time at least .02 microseconds and frequency indication accuracy of no poorer than ±3%.

Type 107 Square-Wave Generator or equivalent with frequency range of 400 kc to 1 mc, peak-to-peak output voltage of at least 0.1 to .5 volts, and risetime of 3 nanoseconds or less.

Input capacitance standardizer, (CS 47), 52 Ω Terminating Resistor, 5:1 L pad, 52 Ω cable and 52 Ω terminating resistor.

Adjustment Procedure.

1. The first step in calibration of your Type B should be to determine the "Vertical System Electrical Center" of your test scope. If a test load unit is available, insert it in the oscilloscope. Depress the PRESS TO SHORT button and observe the vertical level of the trace. This can also be accomplished by placing a jumper between pins 1 and 3 of the interconnecting plug on your Type B Unit, thus shorting the plug-in output, and again observing the vertical level of the CRT trace. This level is referred to later in the calibration procedure.

2. Before starting calibration of your Type B Unit, be sure that the left side and bottom panels are removed from your oscilloscope. Unless otherwise specified, oscilloscope controls will be set as follows:

HORIZONTAL DISPLAY	MAIN OR "A" SWEEP, NORMAL
TRIGGERING MODE	AUTOMATIC
TRIGGER SLOPE	—INT
STABILITY	PRESET
TIME/CM	1 MILLISEC

3. Adjust DC BAL.

Position the trace on the oscilloscope to about the center horizontal graticule line. Adjust DC BAL so that the trace does not shift vertically while the VARIABLE VOLTS/CM control is shifted throughout its range.

4. Adjust Vert. Pos. Range.

Set the VERTICAL POSITION knob at mid-range. Adjust the VERT. POS. RANGE or POSITIONING ADJ. control so that the trace is at "Vertical-System Electrical Center."

5. Set GAIN ADJ.

From the CALIBRATOR of the oscilloscope, apply .2 volts to INPUT A and set GAIN ADJ. 1 for 4 cm of vertical deflection. Set VOLTS/CM switch to .005 and apply 20 millivolts from the CALIBRATOR to INPUT A. Set GAIN ADJ. 2 for 4 cm of vertical deflection.

6. Adjust Main Amplifier Input Capacitor.

Set plug-in controls to INPUT A, DC, VOLTS/CM to .05 and VARIABLE to CALIBRATED. Connect the Input Capacitance Standardizer to INPUT A. From the Type 105, apply a 1 kc signal. Adjust the Type 105 OUTPUT AMPLITUDE for 3.5 cm of vertical deflection on the scope. In Type B Units S/N 101 through 3300, adjust C3002 for the best square wave. For S/N's 3301 and up, adjust C3262.

7. Adjust VOLTS/CM Switch Compensations.

Leave the Type 105 and Type B set as in the previous step, with the exception of the Type B VOLTS/CM Switch. In Type B Units S/N 101 through 3300, adjust the 1 kc square wave from the Type 105 for optimum square corner and optimum flat top as follows:

VOLTS/CM	FLAT TOP ADJUST	SQUARE CORNER ADJUST
0.1	C3162	C3172
.2	C3192	C3202
.5	C3092	C3102
5.0	C3132	C3142

http://manoman.sqhill.com

For Type B Units, S/N's 3301 and up, adjust as follows:

VOLTS/CM	SQUARE CORNER ADJUST	FLAT TOP ADJUST
0.1	C3232	C3222
.2	C3172	C3162
.5	C3112	C3102
5.0	C3072	C3062

8. Adjust Preamplifier Input Capacitor.

Leaving Type 105 and Type B controls as before, with the exception of the VOLTS/CM switch, adjust Type 105 OUTPUT AMPLITUDE for 3.5 cm of vertical deflection and set Type B VOLTS/CM to .005. In Type B Units S/N 101 through 3300, adjust C3322 for the best square wave. In S/N's 3301 and up, adjust C4322.

9. Set Low-Frequency Compensation

Set the VOLTS/CM control on the Type B Unit to .005. From the Type 105, apply a 50-cycle signal to INPUT A. Adjust LOW FREQ. COMP. for optimum square wave.

10. Adjust Main Amplifier High Frequency Compensations.

Set oscilloscope TIME/CM control to .2 μSEC and Type B VOLTS/CM to .05. From the Type 107, apply 3 cm of signal at approximately 450 kc to INPUT A. For Type B Units S/N's 3301 and up, adjust L3402 and L3582 for optimum leading edge and slope back of leading edge. Adjust H.F. PEAKING control for optimum square corner with no overshoot. These controls are interacting, so several readjustments may be necessary. For Type B Units S/N 101 through 3300, adjust L4402 and L4202 for the best square wave.

11. Adjust Preamplifier High Frequency Compensations.

Leaving the other controls as before, set the Type B VOLTS/CM switch to .005. In Type B Units, S/N 3301 and up, adjust L4032, L4042 and L4162 for optimum square wave. In some lower serial number instruments an adjustable coil, L3602 is provided for Preamplifier HF Compensation.

12. Check Frequency Response.

Reset oscilloscope controls as follows:

TRIGGERING MODE	AC SLOW
TIME/CM	100 MICROSEC
STABILITY	full right (cw)

Set Type B VOLTS/CM to .05. From the Type 190, apply 3 cm of signal at 50 kc to INPUT A. Adjust Type 190 to obtain a frequency of 20 mc without changing 190 OUTPUT AMPLITUDE, and check for at least 2.1 cm of vertical deflection remaining. Reset the VOLTS/CM switch to .005 and repeat the same procedure, but check for 2.1 cm of vertical deflection at 12 mc.

http://manoman.sqhill.com

PARTS LIST *and* DIAGRAMS

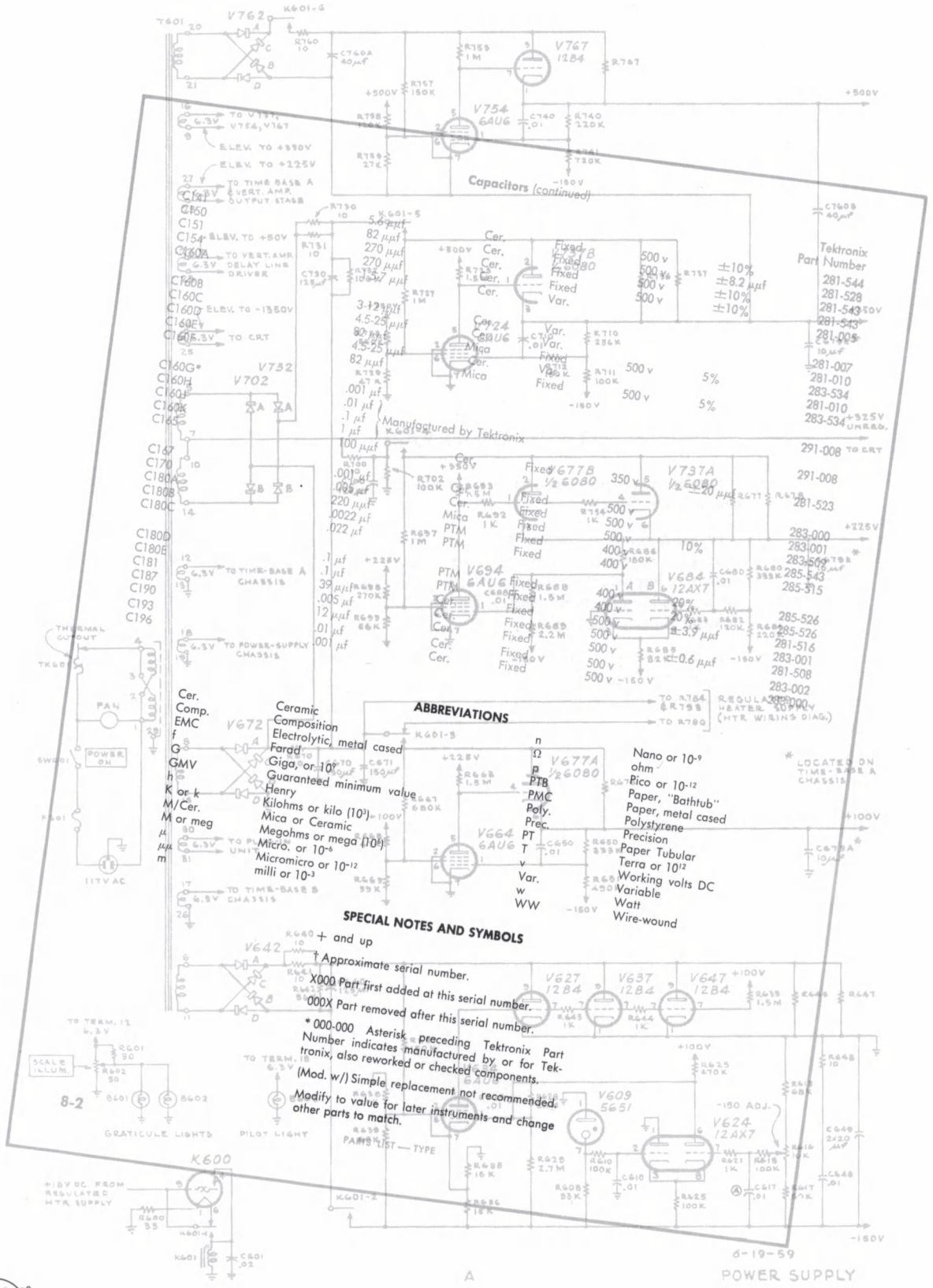

MANUFACTURERS OF CATHODE-RAY OSCILLOSCOPES

http://manoman.sqhill.com

HOW TO ORDER PARTS

Replacement parts are available through your local Tektronix Field Office.

Improvements in Tektronix instruments are incorporated as soon as available. Therefore, when ordering a replacement part it is important to supply the part number including any suffix, instrument type, serial number, plus a modification number where applicable.

If the part you have ordered has been improved or replaced, your local Field Office will contact you if there is a change in part number.

http://manoman.sqhill.com

PARTS LIST

* 000-000 Asterisk preceding Tektronix Part Number indicates manufactured by or for Tektronix, also reworked or checked components.

Capacitors

							Tektronix Part Number
C3002	101-3300X	1.5-7 μμf	Cer.	Var.	500 v		281-005
C3012	101-3300X	.001 μf	Cer.	Fixed	500 v	GMV	283-000
C3022	101-1280	.1 μf	PTM	Fixed	600 v		285-528
	1281-3300	.1 μf	PTM	Fixed	600 v		285-547
	3301-up	.001 μf	Cer.	Fixed	500 v	GMV	283-000
C3042	X3301-up	.1 μf	PTM	Fixed	600 v	20%	285-528
C3052	X4898-up	8 μμf	Cer.	Fixed	500 v	±0.5 μμf	281-503
C3062	X3301-up	4.5-25 μμf	Cer.	Var.	500 v		281-010
C3072	X3301-up	1.5-7 μμf	Cer.	Var.	500 v		281-005
C3082	X3301-up	250 μμf	Mica	Fixed	500 v	5%	283-543
C3092	101-3300X	1.5-7 μμf	Cer.	Var.	500 v		281-005
C3102	101-3300	4.5-25 μμf	Cer.	Var.	500 v		281-010
	3301-3453	3-12 μμf	Cer.	Var.	500 v		Use 281-010
	3454-up	5-20 μμf	Cer.	Var.	500 v		281-010
C3112	101-3300	150 μμf	Cer.	Fixed	500 v	20%	281-524
	3301-up	4.5-25 μμf	Cer.	Var.	500 v		281-010
C3122	3301-3453	100 μμf	Cer.	Fixed	500 v		Use 283-544
	3454-up	150 μμf	Mica	Fixed	500 v	10%	283-544
C3132	101-3300X	1.5-7 μμf	Cer.	Var.	500 v		281-005
C3142	101-3300X	5-20 μμf	Cer.	Var.	500 v		Use 281-010
C3152	101-3300X	.002 μf	Mica	Fixed	500 v		283-529
C3162	101-3300	1.5-7 μμf	Cer.	Var.	500 v		281-005
	3301-4483	3-12 μμf	Cer.	Var.	500 v		281-007
	4484-up	5-20 μμf	Cer.	Var	500 v		Use 281-010
C3172	101-3300	5-20 μμf	Cer.	Var.	500 v		Use 281-010
	3301-up	3-12 μμf	Cer.	Var.	500 v		281-007
C3192	101-3300X	1.5-7 μμf	Cer.	Var.	500 v		281-005
C3202	101-3300X	5-20 μμf	Cer.	Var.	500 v		Use 281-010
C3212	101-3300X	22 μμf	Cer.	Fixed	500 v	10%	281-511
C3222	X3301-3453	1.5-7 μμf	Cer.	Var.	500 v		Use 281-007
	3454-up	3-12 μμf	Cer.	Var.	500 v		281-007
C3232	X3301-up	4.5-25 μμf	Cer.	Var.	500 v		281-010
C3252	X3301-up	270 μμf	Cer.	Fixed	500 v	20%	281-543
C3262	X3301-up	1.5-7 μμf	Cer.	Var.	500 v		281-005
C3282	X3301-up	.005 μf	Cer.	Fixed	500 v	GMV	283-001
C3292	X3301-up	.001 μf	Cer.	Fixed	500 v		283-000
C3302	101-3300X	.001 μf	Cer.	Fixed	500 v	GMV	283-000
C3322	101-3300	1.5-7 μμf	Cer.	Var.	500 v		281-005
	3301-up	.005 μf	Cer.	Fixed	500 v	GMV	283-001
C3342	101-3300X	2 x 275 μf	EMC	Fixed	6 v	−20+50%	(2)290-020
C3462	101-3300X	3 x 10 μf	EMC	Fixed	350 v	−20+50%	290-032
C3512	101-3300X	.1 μf	PT	Fixed	600 v	20%	285-528
C3662	101-3300X	.01 μf	PT	Fixed	400 v	20%	285-510
C3842	X3301-up	.005 μf	Cer.	Fixed	500 v	GMV	283-001
C3942	X3301-up	.005 μf	Cer.	Fixed	500 v	GMV	283-001
C4012	101-3300X	.01 μf	Cer.	Fixed	500 v	GMV	283-002

http://manoman.sqhill.com

Capacitors *(continued)*

							Tektronix Part Number
C4022	101-3300	1.5-7 μμf	Cer.	Var.	500 v		281-005
C4022A,B	3301-up	3 x 10 μf	EMC	Fixed	350 v	—20+50%	290-032
C4102	X3301-up	.001 μf	Cer.	Fixed	500 v	GMV	283-000
C4132	X3301-up	.1 μf	PT	Fixed	600 v	20%	285-528
C4322	X3301-up	1.5-7 μμf	Cer.	Var.	500 v		281-005
C4362	X3301-13,359	275/2 μf	PTM	Fixed	6 v	—20+50%	(2)290-020
	13,360-up	500 μf	EMC	Fixed	6 v	—20+50%	290-030
C4402	X3301-up	.001 μf	Cer.	Fixed	500 v	GMV	283-000
C4452	X3301-up	.005 μf	Cer.	Fixed	500 v	GMV	283-001
C4512	X3301-up	.01 μf	Cer.	Fixed	500 v		283-002
C4522	X3301-up	.047 μf	PTM	Fixed	400 v	20%	285-519
C4532	X3301-up	.01 μf	Cer.	Fixed	500 v	GMV	283-002
C4552	X3301-up	.001 μf	Cer.	Fixed	500 v	GMV	283-000
C4702	101-3300X	.1 μf	PTM	Fixed	400 v	20%	285-526
C4712	101-3300X	.001 μf	Cer.	Fixed	500 v	GMV	283-000
C4722	101-326X	.001 μf	Cer.	Fixed	500 v	GMV	283-000
C4732	101-3300X	.01 μf	PTM	Fixed	400 v	20%	285-510
C4742	101-326X	.001 μf	Cer.	Fixed	500 v	GMV	283-000

Inductors

						Tektronix Part Number
L3402	X3301-up	3.3-6 μh	Var.	core 276-506		*114-053
L3432	X3301-up	.3 μh	Fixed			*108-112
LR3462	101-326	2.4 μh	Fixed,	Wound on R3462		*108-063
	327-up	4.6 μh	Fixed,	Wound on R3462		*108-070
L3472	101-621	11-18 μh	Var.	core 276-503		*114-001
	622-up	8.5-14 μh	Var.			*114-026
L3582	X3301-up	3.3-6 μh	Var.	core 276-503		*114-053
LR3602	101-621	3.3-7 μh	Var.	core 276-503		*114-017
	622-up	3.8 μh	Fixed,	Wound on L3602		*108-073
L3842	X3301-up	.3 μh	Fixed			*108-112
L3942	X3301-up	.3 μh	Fixed			*108-112
L4032	3301-15269	4.8-8.5 μh	Var.	core 276-503	use	*114-020
	15270-up	3.3-7 μh	Var.	core 276-503		*114-017
L4042	X3301-up	25-48 μh	Var.	core 276-503		*114-052
L4162	X3301-up	2.2-4.4 μh	Var.	core 276-503		*114-007
L4202	101-307	2.6-4.8 μh	Var.	core 276-503		*114-011
	308-678	1.3-2.2 μh	Var.	core 276-503		*114-003
	679-up	.92-1.5 μh	Var.	core 276-503		*114-028
L4402	101-307	2.6-4.8 μh	Var.	core 276-503		*114-011
	308-678	1.3-2.2 μh	Var.	core 276-503		*114-003
	679-up	.92-1.5 μh	Var.	core 276-503		*114-028
L4512	101-3300X	0.45 μh	Fixed			*108-062
L4562	101-3300X	0.45 μh	Fixed			*108-062

http://manoman.sqhill.com

Rectifiers

			Tektronix Part Number
SR3342	X308-3300X	100 ma/plate	*106-022
SR4362	X3301-13359X	100 ma/plate	*106-037

Note: SR4362 was replaced by a Germanium diode, (V4362), Tek. No. 152-008, at SN13360.

Resistors

R3002	X3301-up	27 Ω	½ w	Fixed	Comp.	10%	302-270
R3012	X3301-up	27 Ω	½ w	Fixed	Comp.	10%	302-270
R3022	101-3300	47 Ω	½ w	Fixed	Comp.	10%	302-470
	3301-up	10 Ω	½ w	Fixed	Comp.	10%	302-100
R3032	X308-up	27 Ω	½ w	Fixed	Comp.	10%	302-270
R3042	X308-3300	27 Ω	½ w	Fixed	Comp.	10%	302-270
	3301-up	47 Ω	½ w	Fixed	Comp.	10%	302-470
R3052	X308-up	56 Ω	½ w	Fixed	Comp.	10%	302-560
R3072	X3301-up	990 k	½ w	Fixed	Prec.	1%	309-013
R3082	X3301-up	10.1 k	½ w	Fixed	Prec.	1%	309-034
R3102	101-3300X	900 k	½ w	Fixed	Prec.	1%	309-111
R3112	101-3300	111 k	½ w	Fixed	Prec.	1%	309-046
	3301-up	900 k	½ w	Fixed	Prec.	1%	309-111
R3122	X3301-up	111 k	½ w	Fixed	Prec.	1%	309-046
R3142	101-3300	990 k	½ w	Fixed	Prec.	1%	309-013
	3301-up	27 Ω	½ w	Fixed	Comp.	1%	302-270
R3152	101-3300X	10.1 k	½ w	Fixed	Prec.	1%	309-034
R3172	101-3300	500 k	½ w	Fixed	Prec.	1%	309-003
	3301-up	750 k	½ w	Fixed	Prec.	1%	309-010
R3182	101-3300	1 meg	½ w	Fixed	Prec.	1%	309-014
	3301-up	333 k	½ w	Fixed	Prec.	1%	309-053
R3202	101-3300X	750 k	½ w	Fixed	Prec.	1%	309-010
R3212	101-3300X	333 k	½ w	Fixed	Prec.	1%	309-053
R3232	X3301-up	500 k	½ w	Fixed	Prec.	1%	309-003
R3242	X3301-up	1 meg	½ w	Fixed	Prec.	1%	309-014
R3252	X3301-up	22 Ω	½ w	Fixed	Comp.	10%	302-220
R3262	X3301-up	100 Ω	½ w	Fixed	Comp.	10%	302-101
R3282	X3301-up	100 k	½ w	Fixed	Comp.	10%	302-104
R3292*	X3301-up	1 meg	½ w	Fixed	Prec.	1%	*312-583
R3302	X3301-up	39 k	1 w	Fixed	Comp.	10%	304-393
R3312	101-3300X	1 meg	½ w	Fixed	Prec.	1%	309-014
R3322	101-up	47 Ω	½ w	Fixed	Comp.	10%	302-470
R3332	101-3300X	100 Ω	2 w	Var.	Comp.	20%	311-003
R3342	101-3300X	15 k	10 w	Fixed	WW	5%	308-024
R3372	101-3300X	160 k	½ w	Fixed	Comp.	5%	301-164
R3282	101-3300X	47 Ω	½ w	Fixed	Comp.	10%	302-470
R3392	101-3300X	180 k	½ w	Fixed	Comp.	5%	301-184
R3402	X3301-up	4 k	5 w	Fixed	WW	5%	308-051
R3412	X3301-up	700 Ω	½ w	Fixed	Prec.	1%	309-083
R3452	101-678	15 k	2 w	Fixed	Prec.	10%	306-153
	679-up	18 k	2 w	Fixed	Comp.	10%	306-183

*R3292 and R4322 are matched within .1% of each other, furnished as a unit.

http://manoman.sqhill.com

Resistors *(continued)*

							Tektronix Part Number
R3462	101-326	47 Ω	½ w	Fixed	Comp.	10%	Part of L3462
	327-3300X	270 Ω	½ w	Fixed	Comp.	5%	Part of L3462
R3472	101-3300X	2.7 k	½ w	Fixed	Comp.	5%	301-272
R3502	101-3300	47 Ω	½ w	Fixed	Comp.	10%	302-470
	3301-up	5.6 k	1 w	Fixed	Comp.	5%	303-562
R3512	101-3300	6.8 k	2 w	Fixed	Comp.	10%	306-682
	3301-up	780 Ω		Var.	WW		Use *311-280
R3522	X3301-up	5.6 k	1 w	Fixed	Comp.	5%	303-562
R3532	X3301-up	6 k	5 w	Fixed	WW	5%	308-052
R3542	X3301-up	10 k	2 w	Var.	WW	20%	311-015
R3552	X3301-up	47 Ω	½ w	Fixed	Comp.	10%	302-470
R3582	X3301-up	700 Ω	½ w	Fixed	Prec.	1%	309-083
R3602	101-621X	560 Ω	½ w	Fixed	Comp.	10%	302-561
R3612	101-3300X	330 k	½ w	Fixed	Comp.	10%	302-334
R3622	101-3300X	2 meg	2 w	Var.	Comp.	20%	311-042
R3632	101-3300X	22 k	½ w	Fixed	Comp.	10%	302-223
R3642	101-3300X	100 k	2 w	Var.		10%	311-026
R3652	101-3300	470 k	½ w	Fixed	Comp.	10%	302-474
	3301-up	8.2 k	1 w	Fixed	Comp.	10%	304-822
R3662	101-3300	3.3 k	½ w	Fixed	Comp.	10%	302-332
	3301-up	10 k	½ w	Fixed	Comp.	10%	302-103
R3702	X3301-up	120 k	½ w	Fixed	Comp.	10%	302-124
R3712	X3301-up	2 x 100 k	2 w	Var.	Comp.	20%	311-028
R3722	X3301-up	120 k	½ w	Fixed	Comp.	10%	302-124
R3752	X3301-up	120 k	½ w	Fixed	Comp.	10%	302-124
R3762	X3301-up	2 x 100 k	2 w	Var.	Comp.	20%	311-051
R3772	X3301-up	120 k	½ w	Fixed	Comp.	10%	302-124
R3802	X3301-up	3.9 k	2 w	Fixed	Comp.	10%	306-392
R3812	X3301-up	9.1 k	1 w	Fixed	Comp.	5%	303-912
R3822	X3301-up	100 Ω	½ w	Fixed	Comp.	10%	302-101
R3862	X3301-up	9.1 k	1 w	Fixed	Comp.	5%	303-912
R3872	X3301-up	2 k	2 w	Var.	Comp.	20%	311-008
R3882	X3301-up	9.1 k	1 w	Fixed	Comp.	5%	303-912
R3902	X3301-up	100 Ω	½ w	Fixed	Comp.	10%	302-101
R3912	X3301-up	9.1 k	1 w	Fixed	Comp.	5%	303-912
R4002	101-3300X	1 meg	½ w	Fixed	Prec.	1%	309-014
R4012	101-3300X	100 k	½ w	Fixed	Comp.	10%	302-104
R4022	101-3300	47 Ω	½ w	Fixed	Comp.	10%	302-470
	3301-up	22 k	2 w	Fixed	Comp.	5%	305-223
R4032	3301-3317	560 Ω	½ w	Fixed	Comp.	10%	Use 302-471
	3318-13,949	470 Ω	½ w	Fixed	Comp.	10%	302-471
	13,950-15269	820 Ω	½ w	Fixed	Comp.	10%	302-821
	15270-up	330 Ω	½ w	Fixed	Comp.	5%	301-331
R4042	X3301-up	3 k	½ w	Fixed	Comp.	5%	301-302
R4052	101-3300X	18 k	½ w	Fixed	Comp.	10%	302-183
R4062	101-3300X	1 k	2 w	Var.	Comp.	20%	311-006
R4072	101-3300X	10 k	1 w	Fixed	Comp.	10%	304-103
R4082	101-3300X	6 k	5 w	Fixed	WW	5%	308-006
R4092	101-3300X	10 k	1 w	Fixed	Comp.	10%	304-103

http://manoman.sqhill.com

Resistors *(continued)*

							Tektronix Part Number
R4102	101-3300	200 Ω	2 w	Var.	Comp.	20%	311-004
	3301-up	100 Ω	½ w	Fixed	Comp.	10%	302-101
R4112	101-3300X	47 Ω	½ w	Fixed	Comp.	10%	302-470
R4122	X3301-3317	220 Ω	½ w	Fixed	Comp.	10%	Use 302-331
	3318-15269	330 Ω	½ w	Fixed	Comp.	10%	302-331
	15270-up	470 Ω	½ w	Fixed	Comp.	10%	302-471
R4132	X3301-up	6.8 k	2 w	Fixed	Comp.	10%	306-682
R4162	X3301-13,949	1.5 k	½ w	Fixed	Comp.	10%	302-152
	13,950-up	1 k	½ w	Fixed	Comp.	10%	302-102
R4172	X3301-up	2 meg	2 w	Var.	Comp.	20%	311-042
R4182	X3301-up	330 k	½ w	Fixed	Comp.	10%	302-334
R4202	101-678	820 Ω	½ w	Fixed	Comp.	5%	301-821
	679-up	750 Ω	½ w	Fixed	Comp.	5%	301-751
R4252	101-3300	150 k	½ w	Fixed	Comp.	10%	302-154
	3301-up	47 Ω	½ w	Fixed	Comp.	10%	302-470
R4262	101-3300	2 x 100 k	2 w	Var.	Comp.	20%	311-051
	3301-up	150 k	½ w	Fixed	Comp.	5%	301-154
R4272	101-3300	150 k	½ w	Fixed	Comp.	10%	302-154
	3301-up	120 k	½ w	Fixed	Comp.	5%	301-124
R4302	101-3300	150 k	½ w	Fixed	Comp.	10%	302-154
	3301-up	47 Ω	½ w	Fixed	Comp.	10%	302-470
R4312	101-3300X	2 x 100 k	2 w	Var.	Comp.	20%	311-028
R4322	101-3300	150 k	½ w	Fixed	Comp.	10%	302-154
	**3301-up	1 meg	½ w	Fixed	Prec.	1%	*312-583
R4352	X3301-up	100 Ω	2 w	Var.	Comp.	20%	311-003
R4362	X3301-13359	20 k	8 w	Fixed	WW	5%	308-081
	13360-up	22 k	2 w	Fixed	Comp.	10%	306-223
R4402	101-678	820 Ω	½ w	Fixed	Comp.	5%	301-821
	679-3300	750 Ω	½ w	Fixed	Comp.	5%	301-751
	3301-up	100 Ω	2 w	Var.	Comp.	20%	311-003
R4412	X3301-up	12Ω	1 w	Fixed	Comp.	10%	304-120
R4422	X3301-up	4.7 Ω	1 w	Fixed	Comp.	10%	307-009
R4502	101-3300X	47 Ω	½ w	Fixed	Comp.	10%	302-470
R4512	101-621X	5.6 k	2 w	Fixed	Comp.	10%	306-562
R4512A	62-3300X	6.8 k	2 w	Fixed	Comp.	10%	306-682
R4512B	X2240-3300X	68 k	½ w	Fixed	Comp.	10%	302-683
R4522	X3301-up	70 Ω	5 w	Fixed	WW	5%	308-078
R4532	X3301-up	39 Ω	2 w	Fixed	Comp.	10%	306-390
R4552	101-3300X	47 Ω	½ w	Fixed	Comp.	10%	302-470
R4562	101-621	5.6 k	2 w	Fixed	Comp.	10%	306-562
R4562A	622-3300X	6.8 k	2 w	Fixed	Comp.	10%	306-682
R4562B	X2240-up	68 k	½ w	Fixed	Comp.	10%	302-683
R4702	101-614	3.3 k	1 w	Fixed	Comp.	10%	304-332
	615-3300X	3.6 k	1 w	Fixed	Comp.	5%	303-362
R4712	101-3300X	100 Ω	½ w	Fixed	Comp.	10%	302-101
R4732	101-621	292 Ω	10 w	Fixed	WW	5%	308-057
	622-330X	210 Ω	10 w	Fixed	WW	5%	308-060

**R4322 and R3292 are matched within .1% of each other, furnished as a unit.

http://manoman.sqhill.com

Switches

			Tektronix Part Number	
			Unwired	Wired
SW3022	101-up	2 wafer, 4 pos., rotary INPUT SELECTOR	*260-081	
SW3142	X3301-up	6 wafer, 12 pos., rotary VOLTS/CM	*260-154 Use	*262-476
SW3202	101-3300X	6 wafer, 11 pos., rotary VOLTS/CM	*260-080	*262-073

Vacuum Tubes

V3252	X3301-up	12AU6	154-040
V3302	101-678	6AK5	Use 154-084
	679-3300X	5654 (Selected 6AK5, *157-002, may be used as substitute)	154-084
V3402	X3301-up	12AU6	154-040
V3502	101-3300X	6BQ7A	154-028
V3552	X3301-up	12AU6	154-040
V3812	X3301-up	12AT7	154-039
V4002	101-3300X	12AU6	154-040
V4102	101-3300	12AU6	154-040
	3301-up	6DJ8	Use 154-187
V4302	X3301-up	5654 (Selected 6AK5, *157-002, may be used as substitute)	154-084
V4362	X13360-up	T12G Germanium Diode	152-008
V4502	101-621	6BQ7A	154-028
	622-3300X	12AT7	154-039

http://manoman.sqhill.com

Type B

Mechanical Parts List

	Tektronix Part Number
BINDING POST CAP	200-103
BINDING POST ADAPTOR STEM	355-507
BINDING POST ASSEMBLY, GROUND	129-035
BOLT, SPADE 6-32 x 3/8	214-012
BRACKET, VERT. POS. RANGE	406-127
BRACKET, HF PEAKING	406-186
BRACKET, SWITCH 1 15/16 x 2 3/4 x 1/2	406-233
BRACKET, MTG. CAP	406-235
BUSHING, ALUM. 3/8-32 x 9/16 x .412	358-010
CABLE HARNESS	179-123
CERAMIC STRIP 3/4 x 3 notches, clip mounted	124-087
CERAMIC STRIP 3/4 x 4 notches, clip mounted	124-088
CERAMIC STRIP 3/4 x 7 notches, clip mounted	124-089
CERAMIC STRIP 3/4 x 11 notches, clip mounted	124-091
CERAMIC POST 1/2"	129-009
CHASSIS SN 101-13,359	441-136
CHASSIS SN 13,360-up	441-270
CLAMP, CABLE 1/4" plastic	343-003
CLAMP, CABLE 7/16" SN 1281-up	343-005
CLAMP, CABLE 5/8"	343-007
CLAMP, STEEL 1/2"	343-015
CLAMP, STEEL 3/4" SN 13,360-up	343-036
CONNECTOR, COAX, CHASSIS MOUNT, female	131-012
CONNECTOR, CHASSIS MOUNT, 16, contact male	131-017
FASTENER, SNAP Double pronged Delrin	214-153
GROMMET, RUBBER 1/4"	348-002
GROMMET, RUBBER 5/16"	348-003
GROMMET, RUBBER 3/8"	348-004
GROMMET, RUBBER 1/2"	348-005
KNOB, SMALL RED	366-038
KNOB, LARGE BLACK 1/4" hole thru	366-040
KNOB, LARGE BLACK 1/4" hole part way	366-042
KNOB, PLUG-IN SECURING	366-125
LOCKWASHER #2 EXT	210-002
LOCKWASHER #4 INT	210-004
LOCKWASHER #6 INT	210-006
LOCKWASHER #10 EXT	210-009
LOCKWASHER 1/4 INT	210-011

http://manoman.sqhill.com

Mechanical Parts List *(continued)*

	Tektronix Part Number
LOCKWASHER 3/8 x 1/2 POT INT	210-012
LOCKWASHER 3/8 x 11/16 INT	210-013
LUG, SOLDER SE4	210-201
LUG, SOLDER SE10 long	210-206
NUT, HEX 2-56 x 3/16	210-405
NUT, HEX 4-40 x 3/16	210-406
NUT, HEX 6-32 x 1/4	210-407
NUT, HEX 10-32 x 5/16	210-410
NUT, HEX 3/8-32 x 1/2	210-413
NUT, HEX 1/4-28 x 3/8 x 3/32	210-455
NUT, KEP 6-32 x 5/16	210-457
NUT, HEX 3/8-32 x 1/2 x 11/16	210-494
PANEL, FRONT SN 101-894	333-105
PANEL, FRONT SN 895-3300	333-147
PANEL, FRONT SN 3301-5383	333-233
PANEL, FRONT SN 5384-11,009	333-283
PANEL, FRONT SN 11,010-up	333-510
PLATE, ALUM. .091 x 511/32 x 611/32	387-529
RING, RETAINING #18	354-025
RING, SPACING	354-060
ROD, FRAME 3/8 x 87/8	384-508
ROD, SECURING 3/16 x 101/2	384-510
ROD, HEX ALUM. 1/2 x 15/16 Tap 3/8 x 32	385-158
SCREW 4-40 x 1/4 BHS	211-008
SCREW 4-40 x 5/16 BHS	211-011
SCREW 4-40 x 5/16 PHS	211-033
SCREW 4-40 x 5/16 FHS Phillips	211-038
SCREW 6-32 x 1/4 BHS	211-504
SCREW 6-32 x 5/16 BHS	211-507
SCREW 6-32 x 3/8 FHS	211-509
SCREW 6-32 x 3/8 BHS	211-510
SCREW 6-32 x 1/2 BHS	211-511
SCREW 6-32 x 3/4 BHS SN 1281-up	211-514
SCREW 8-32 x 1/2 FHS Phillips	212-043
SCREW 8-32 x 1/2 RHS	212-044
SCREW, THREAD CUTTING 4-40 x 5/16 RHS Phillips	213-034
SCREW, THREAD CUTTING 4-40 x 1/4 PHS	213-035
SCREW, THREAD CUTTING 5-32 x 3/16 Pan HS Phillips	213-044
SOCKET, STM7	136-007
SOCKET, STM7G	136-008
SOCKET, STM7, shielded	136-009
SOCKET, STM9G	136-015

http://manoman.sqhill.com

Mechanical Parts List *(continued)*

	Tektronix Part Number
SHIELD, ATTEN. SWITCH	337-142
SPACER, ALUM. .180 ID x 1/4 OD x 1/4	166-031
SUBPANEL	386-349
TUBING #20 black plastic	162-504
WASHER, STEEL 6S x 5/16 x .028	210-802
WASHER, STEEL 6L x 3/8 x .032	210-803
WASHER, FIBER #10	210-812
WASHER, STEEL .390 ID x 9/16 OD x .020	210-840
WASHER, STEEL #2 .039 ID x 9/32 OD x .020	210-850
WASHER, STEEL #4L .119 ID x 3/8 OD x .025	210-851
WIRE, #22 SOLID, WHITE	175-522

http://manoman.sqhill.com

ATTENUATOR DETAIL

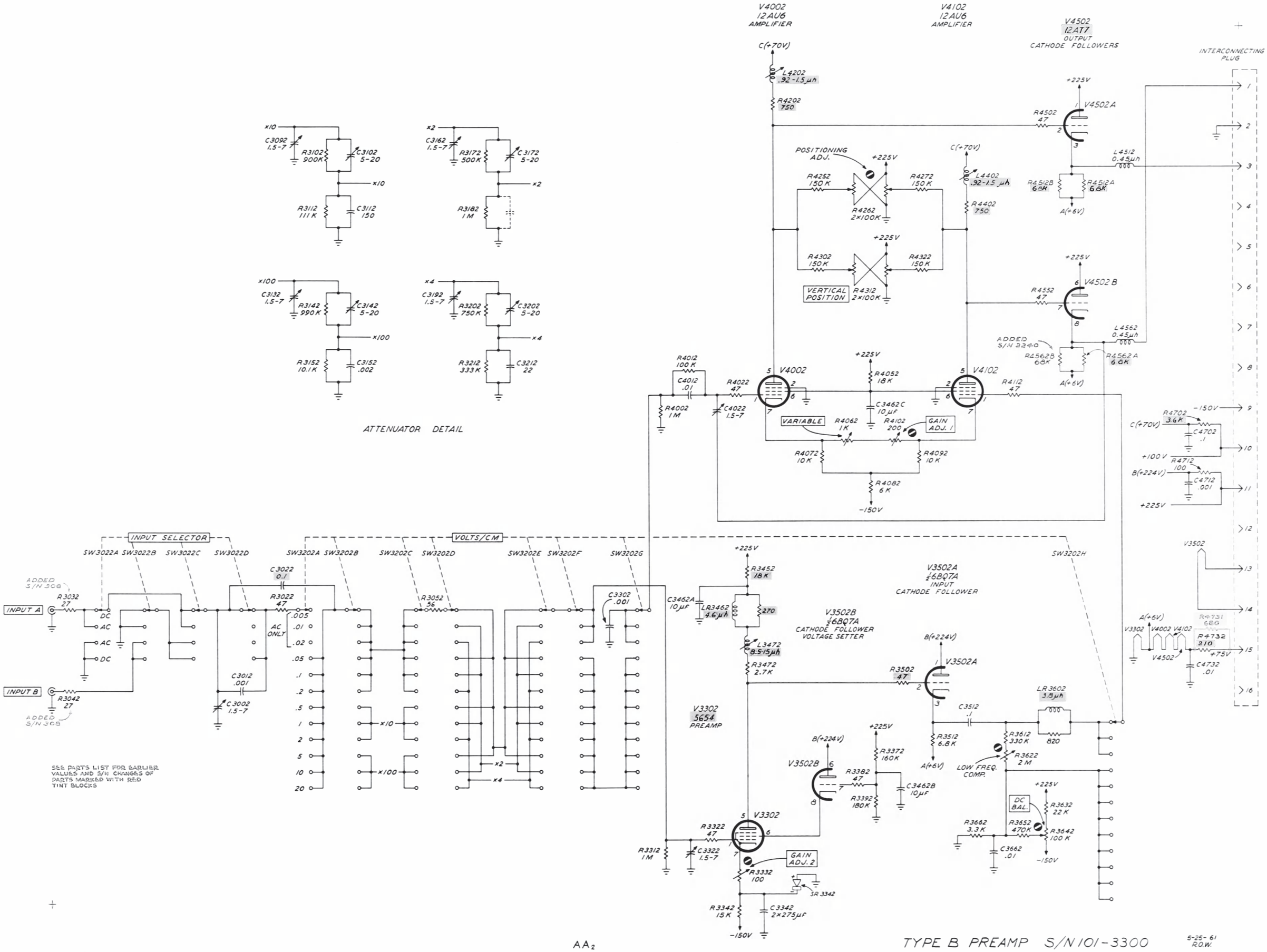

TYPE B PREAMP S/N 101-3300

5-25-61 R.O.W.

AA2

http://manoman.sqhill.com

V3252
INPUT C.F.

V4102B
INPUT C.F.

V4102A
C.F. VOLTAGE SETTER

V4302
AMPLIFIER

V3402
V3552
AMPLIFIERS

V3812A
V3812B
OUTPUT C.F.'s.

VOLTS/CM 1F 1R 2F 2R 3F 3R 4F 4R

INPUT SELECTOR
SW3022A SW3022B SW3022C SW3022D

INPUT A
R3002 27
DC
AC
AC
DC

INPUT B
R3012 27

C3022 .001
C3042 0.1
R3022 10
R3042 47
R3142 27

20 10 5 2 1 .5 .2 .1 .05 .02 .01 .005 (AC ONLY)
×100 ×10 ×4 ×2 ×1

C3282 .005
R3262 100
R3282 100K
C3262 1.5-7
R3292 1M

+100V
R3322 47
C3322 .005
V3252 12AU6
+1.55
R3302 39K
-150V

+100V
R3402 4K
R3412 700
L3402 3.3-6μh
V3402 12AU6
L3432 .3μh
+3.71
(VOLTS/CM) VARIABLE
R3502 5.6K
R3512 780
R3522 5.6K
R3532 6K
R3542 10K
GAIN ADJ. 1
-150V
+147.6
+3.71
V3552 12AU6
R3552 47
L3582 3.3-6μh
R3582 700
+66.6

VERTICAL POSITION
R3652 0.2K
R3662 10K
+100V
+225V
R3702 120K
R3712 2×100K
R3722 120K
R3752 120K
R3762 2×100K
R3772 120K
VERT. POS. RANGE
"A" (+9V)

+350V
R3802 3.9K
TO 'X' BELOW
R3812 9.1K
+238.5
V3812B ½12AT7
R3822 100
C3842 .005
R3862 9.1K
R3872 2K
H.F. PEAKING
R3882 9.1K
L3842 .3μh
L3942 .3μh
C3942 .005
V3812A ½12AT7
R3902 100
+66.6
+238.5
'X'
R3912 9.1K

+225V
R4022 22K
C4022A 10μf
R4032 330
L4032 3.3-7 μh
R4042 3K
L4042 25-48μh
+95.4
+225V
R4102 100
C4102 .001
V4102B ½6DJ8
R4122 470
+99.2
C4132 0.1
R4132 6.8K
"A" (+9V)
LOW FREQ. COMP.
R4172 2M
R4182 330K
R4162 1K
L4162 2.2-4.4μh
+69

+225V
V4102A ½6DJ8
R4252 47
R4262 130K
R4272 120K
C4022B 10μf
V4302 5654
R4302 47
R4322 1M
C4322 1.5-7
+100
+1.9
R4352 100
GAIN ADJ. 2
V4362 T12G
C4362 500
C4372 275μf
R4362 22K
-150V

"A" (+9V)
V4302 V3252 V3402 V3552 V3812
R4402 100
R4412 12
C4402 .001
R4422 4.7
DC BAL.
C4452 .005
R4522 70
R4532 39
C4512 .01
C4522 .047
C4532 .01
+75V

-150V 9
+100V 10
+225V 11
+350V 12
TO V4102
6.3V AC 13 14
C4552 .001
15 16
1 +68
2
3 -68
4 5 6 7 8

VOLTAGE READINGS WERE OBTAINED WITH CONTROLS SET AS FOLLOWS:
SWITCHES..... AS SHOWN
VERTICAL POSITION.....CENTERED
VARIABLE..... CAL BRATED

SEE PARTS LIST FOR EARLIER VALUES AND S/N CHANGES OF PARTS MARKED WITH RED TINT BLOCKS

IMPORTANT:
ALL CIRCUIT VOLTAGES WERE OBTAINED WITH A 20,000Ω/V VOM. ALL READINGS ARE IN VOLTS.

VOLTAGE AMPLITUDE MEASUREMENTS, AS SHOWN, ARE NOT ABSOLUTE. THEY MAY VARY BETWEEN INSTRUMENTS AS WELL AS WITHIN THE INSTRUMENT ITSELF DUE TO NORMAL MANUFACTURING TOLERANCES, AND TRANSISTOR AND VACUUM TUBE CHARACTERISTICS.

×100
C3052 8
C3062 4.5-25
R3072 990K
C3072 1.5-7
R3082 10.1K
C3082 250

×4
C3162 4.5-25
R3172 750K
C3172 3-12
R3182 333K

×10
C3102 4.5-25
R3112 900K
C3112 4.5-25
R3122 111K
C3122 150

×2
C3222 3-12
R3232 500K
C3232 4.5-25
R3242 1M

×1
R3252 22
C3252 270

ATTENUATION NETWORKS

AD2

TYPE B PREAMP
S/N 3301 & UP

1-3-61
KF

http://manoman.sqhill.com

MANUAL CHANGE INFORMATION

At Tektronix, we continually strive to keep up with latest electronic developments by adding circuit and component improvements to our instruments as soon as they are developed and tested.

Sometimes, due to printing and shipping requirements, we can't get these changes immediately into printed manuals. Hence, your manual may contain new change information on following pages. If it does not, your manual is correct as printed.

http://manoman.sqhill.com