TEK INSTRUCTION MANUAL

Part No. 070-2561-00
Product Group 84

634 MONITOR
WITH OPTIONS

Tektronix
COMMITTED TO EXCELLENCE

TEK INSTRUCTION MANUAL

Part No. 070-2561-00
Product Group 84

634 MONITOR
WITH OPTIONS

Please Check for
CHANGE INFORMATION
at the Rear of This Manual

First Printing JUL 1978
Revised AUG 1986

Tektronix®
COMMITTED TO EXCELLENCE

TABLE OF CONTENTS

WARNING

THE REMAINING PORTION OF THIS TABLE OF CONTENTS LISTS THE SERVICING INSTRUCTIONS. THESE SERVICING INSTRUCTIONS ARE FOR USE BY QUALIFIED PERSONNEL ONLY. TO AVOID ELECTRICAL SHOCK, DO NOT PERFORM ANY SERVICING OTHER THAN THAT CALLED OUT IN THE OPERATING INSTRUCTIONS UNLESS QUALIFIED TO DO SO.

TABLE OF CONTENTS (CONT.)

LIST OF ILLUSTRATIONS

The illustrations in section 9 are located near their associated diagrams on the foldout page.

LIST OF TABLES

OPERATORS SAFETY INFORMATION

The following general safety information applies to all operators and service personnel. Specific warnings will be found throughout the manual where they apply and should be followed in each instance.

WARNING statements identify conditions or practices which could result in personal injury or loss of life.

CAUTION statements identify conditions or practices which could result in damage to the equipment or other property.

The word **DANGER** on the equipment identifies areas of immediate hazard which could result in personal injury or loss of life.

The following safety symbols may appear on the equipment:

ATTENTION—Refer to manual

DANGER—High voltage

Protective ground (earth) terminal

Other warning symbols where they apply.

WARNING

AC POWER SOURCE AND CONNECTION

This instrument operates from a single-phase power source and has a three-wire power cord with a two-pole, three-terminal grounding-type connector. The voltage to ground (earth) from either pole of the power source must not exceed the maximum rated operating voltage, 250 volts.

Before making connection to the power source, a qualified service person should verify that the instrument is set to match the voltage of the power source and has a suitable two-pole, three-terminal grounding-type connector.

GROUNDING THE INSTRUMENT

This instrument is safety class 1 equipment (IEC designation). Safety class 1 equipment has a 3-wire power cord with a 3-contact plug for connection to the power source and to protective ground. The plug protective-ground contact connects (through the cord protective-grounding conductor) to the accessible metal parts of the equipment. For electric-shock protection, insert this plug into a socket outlet that has a securely grounded protective-ground contact.*

For medical-dental applications (to assure grounding integrity) the hospital-grade input plug must be inserted only into a mating hospital-grade receptacle with a grounding contact.

To confirm that the socket-outlet ground contact is securely grounded, refer to qualified service personnel.

**IEC: International Electrotechnical Commission*

DANGER ARISING FROM LOSS OF GROUND

Upon loss of the protective-ground connection, all accessible conductive parts (including knobs and controls that may appear to be insulating) can render an electric shock.

MEDICAL-DENTAL APPLICATIONS

Do not use the VIDEO INPUTs for direct patient connection. Signal currents at these connectors, as well as leakage currents, may exceed values considered non-hazardous for direct patient connection.

Although this instrument is not to be used for direct patient connection, interconnecting this Monitor with other equipment can result in application of excessive current to the patient. It is extremely important that the equipment be interconnected in accordance with NFPA 76B-T, Tentative Standard for the Safe Use of Electricity in Patient Care Areas of Health Care Facilities, section 3038, "Signal Transmission Between Appliances". Also refer to NFPA 70, National Electrical Code, paragraphs 517-120 through 517-122.

Do not operate this instrument in the presence of flammable gases or anesthetics. Explosion can result from operation in such an environment.

USE THE PROPER FUSE

Refer fuse replacement to qualified service personnel only. To avoid electric shock and fire hazard, use only the fuse specified in the parts list for your instrument and which is identical in the following respects.

A. Type—Slow blow, fast blow, etc.

B. Voltage rating—250 V, etc.

C. Current rating.

USE THE PROPER POWER CORD

Use only the power cord and connector specified for your product. Use only a power cord that is in good condition. For detailed information on power cords and connectors, see Tables 3-1 and 3-2 in the Installation section. Refer cord and connector changes to qualified service personnel.

DO NOT OPERATE IN EXPLOSIVE ATMOSPHERES

To avoid explosion, do not operate this product in an atmosphere of explosive gases unless it has been specifically certified for such operation.

DO NOT REMOVE PROTECTIVE COVERS

High-voltage is present inside the instrument. To avoid electric shock, operating personnel must not remove protective covers. Component replacement and internal adjustments must be made by qualified service personnel only.

LIMIT INPUT SIGNAL VOLTAGE

To avoid electric-shock hazard and to protect the instrument, do not apply input signals of greater than 5 volts (dc + peak ac).

CAUTION

PREVENT IMAGE BURN-IN ON CRT PHOSPHOR

To avoid damaging the crt phosphor, do not allow a stationary bright image to remain on the screen any longer than necessary.

SERVICE SAFETY INFORMATION

FOR QUALIFIED SERVICE PERSONNEL ONLY

The following are safety precautions which appear in the servicing information sections of this manual. This Service Safety Information is for qualified service personnel only and is in addition to the Operators Safety Information given previously.

WARNING

DO NOT SERVICE ALONE

Do not attempt internal service or adjustment of this instrument unless another person, capable of rendering first aid and resuscitation, is present.

AC POWER SOURCE AND CONNECTION

This instrument operates from a single-phase power source and has a three-wire power cord with a two-pole, three-terminal grounding-type connector. The voltage to ground (earth) from either pole of the power source must not exceed the maximum rated operating voltage, 250 volts.

Before making connection to the power source, verify that the instrument is set to match the voltage of the power source and has a suitable two-pole, three-terminal grounding-type connector.

DISCONNECT INSTRUMENT POWER

To avoid electric shock, disconnect the Monitor from the power source before removing protective panels, soldering, or replacing components.

EXERCISE CARE WHEN OPERATING INSTRUMENT WITHOUT COVERS

Dangerous potentials exist at several points throughout this instrument. When the instrument is operated without protective covers, do not touch exposed connections or components.

CRT HANDLING

Use care when handling a crt. Breakage of the crt causes a high-velocity scattering of glass fragments (implosion). Protective clothing and safety glasses should be worn. Avoid striking the crt on any object which might cause it to crack or implode. When storing a crt, place it in a protective carton or set it face down in a protected location on a smooth surface with soft mat under the faceplate.

SILICONE GREASE HANDLING

Handle silicone grease with care. Avoid getting the silicone grease in your eyes. Wash hands thoroughly after use.

CAUTION

APPLY PROPER LINE VOLTAGE

To prevent damage to the instrument, always check the line-voltage information recorded on the rear panel before applying power to the instrument. Incorrect placement of the internal line-voltage selector plug may damage the instrument. Verify correct placement of the line-voltage selector plug.

AVOID EXCESSIVE MOISTURE

Circuit boards and components must be dry before applying power to prevent damage from electrical arcing.

EXERCISE CARE WHEN CHECKING DIODES

When checking diodes, do not use an ohmmeter setting that has a high internal current, since high currents may damage the diodes under test.

USE PROPER CLEANING AGENTS

Avoid the use of chemical cleaning agents which might damage the plastics used in this instrument. Use a non-residue type of cleaner, preferably isopropyl alcohol, totally denatured ethyl alcohol, or TP35. Before using any other type of cleaner, consult your Tektronix Service Center or representative.

WARNING

This equipment generates, uses, and can radiate radio frequency energy and may cause interference to radio communications if not installed and used in accordance with the instruction manual. It has been tested and found to comply with the limits for Class B computing devices pursuant to Subpart J of Part 15 of FCC Rules, which are designed to provide reasonable protection against such interference when this equipment is operated in a commercial environment. Operation in a residential area is likely to cause interference in which case the users at their own expense must take whatever measures may be required to correct the interference.

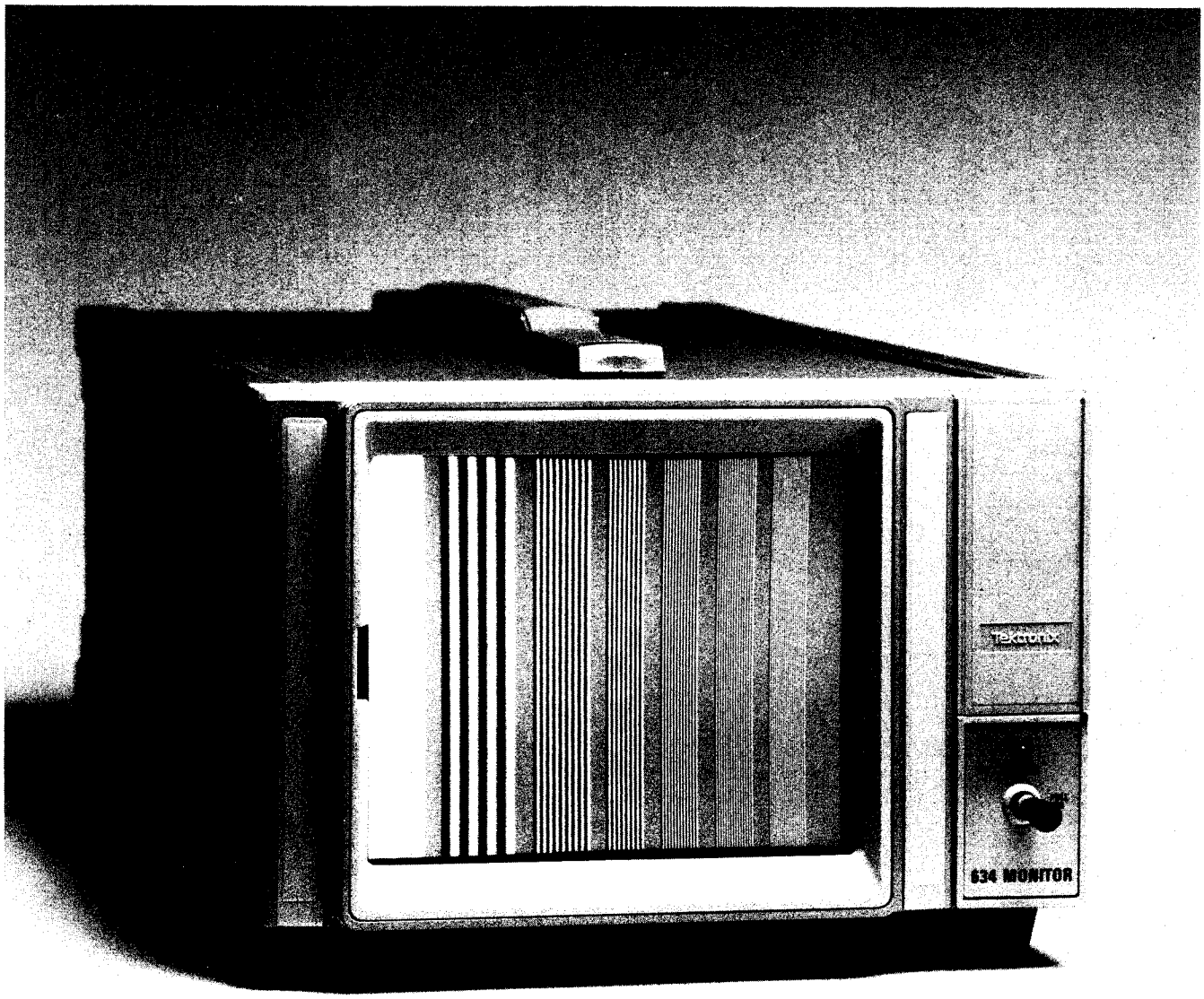

634 MONITOR (OPTION 23) FEATURES

The 634 Monitor utilizes magnetic deflection raster scan to provide a 9 x 12 cm video display area on the crt. The 634 is well suited for many display applications in ultrasonic detection systems, electron microscope systems, radiation and thermal scanning systems, speech therapy, mechanical pressure, volume and vibration analysis, and medical biophysical systems. The 634 may also be used to provide video displays of alpha-numeric and graphic information from measurement systems, computers, and other data-transmission systems. The rear panel VIDEO INPUT connectors provide a means to operate several 634 Monitors from a single video source.

The external physical dimensions of the 634 Monitor lends itself to easy rackmounting to adjacent equipment.

GENERAL INFORMATION

INTRODUCTION

The Operators Manual contains information necessary to effectively operate the 634 Monitor and is divided into three sections: Section 1 provides packaging for shipment information, specifications, and a list of standard accessories. Section 2 contains operating information. Information concerning available options for the 634 Monitor is located in section 3.

The Instruction Manual contains ten sections. Operating information is covered in the first two sections, servicing information is covered in the remaining eight sections. Schematic diagrams are located at the rear of the manual and can be unfolded for reference while reading other parts of the manual. The reference designators and symbols used on the schematic diagrams are defined on the first page of the Diagrams and Circuit Board Illustrations section. Abbreviations used in the manuals, except in the parts list and schematic diagrams, comply with the American National Standards Institute Y1.1-1972 publication. The parts list is a computer printout and uses computer supplied abbreviations.

525/60 OR 625/50 OPERATION

The 634 is factory calibrated at a 525/60 line rate. If operation at 625/50 line rate is desired, it will be necessary to adjust the instrument. Refer this adjustment to qualified service personnel only.

INSTRUMENT DESCRIPTION

The 634 Monitor is a compact, solid-state instrument with excellent resolution, providing a video display of information input to the VIDEO INPUT connectors on the rear panel.

WARNING

High voltage is present inside the instrument. To avoid electric shock, operating personnel must not remove the protective covers. Component replacement and internal adjustments must be made by qualified service personnel only.

Video signals connected to the VIDEO INPUT connector are amplified by the Input and Video Output Amplifiers to drive the crt control grid.

The Input Amplifier also supplies a synchronization signal to the Vertical and Horizontal Ramp Generators. The vertical and horizontal ramps are then geometrically shaped and amplified to drive the electromagnetic deflection yokes.

Signal samples from the Vertical Ramp Generator and Horizontal Yoke Driver provide retrace blanking to the crt cathode. Screen blanking can be achieved by supplying a zero input level to the rear-panel TTL BLANKING connector.

The Dynamic Focus circuit provides focus correction for the display when the crt beam is deflected from crt center. Thus, by varying the voltage to the crt focus element, the Dynamic Focus Circuit compensates for geometric defocusing.

The High-Voltage and Low-Voltage Power Supplies provide all the voltages necessary for operation of this instrument.

EXTERIOR CLEANING

Loose dust accumulated on the outside of the instrument can be removed with a soft cloth or small brush. The brush is particularly useful for dislodging dirt on and around the front-panel controls. Dirt which remains can be removed with a soft cloth dampened in a mild detergent and water solution. Abrasive cleaners should not be used.

SPECIFICATION

The electrical specifications listed in Table 1-1 apply when the following conditions are met: (1) The instrument must have been adjusted at an ambient temperature between +20° and +30°C (+68° and +86°F), (2) the instrument must be operating in an ambient temperature between 0° and +50° (+32° and +122°F), and (3) the instrument must have been operating for at least 20 minutes.

TABLE 1-1

Electrical Characteristics

Characteristic	Performance Requirement
VIDEO INPUT SIGNAL	
Sync Pulse	Negative (negative black level).
Amplitude Range For Stable Display	0.35 V to 2 V peak-to-peak (max.).
Return Loss	46 dB to 5 MHz with internal 75 Ω termination and power on.
Maximum Nondestructive Input Voltage	±5 V peak.
Bandwidth. [Within 3 dB at 50% depth of modulation (22 V of signal on grid)]	1 Hz to at least 10 MHz. (Option 14: 1 Hz to at least 20 MHz.)
RASTER	
Sweep Rate	
Vertical (field)	60 ramps/second, adjustable to 50 ramps/second
Horizontal (line)	15,750 ramps/second. Option 15 is continuously adjustable from 675/60 through 875/60, and from 875/60 through 1084/60. Option 15 is factory calibrated at 32,520 ramps/second (1084/60).
Linearity	
Display Area	
9 cm diameter circle centered within the 9 x 12 cm graticule area.	± 0.5% of the height (0.045 cm or 0.018 inch).
9 x 12 cm graticule area excluding the centered 9 cm diameter circle.	± 1% of the height (0.09 cm or 0.036 inches).
Linearity (Option 1 Only)	Also refer to Resolution (Option 1).
Display Area	
9 cm diameter circle centered within the 9 x 12 cm graticule area.	± 1% of the height (0.09 cm or 0.036 inches).
9 x 12 cm graticule area excluding the centered 9 cm diameter circle.	± 2% of the height (0.018 cm or 0.07 inches).

TABLE 1-1 (CONT.)

Electrical Characteristics

Characteristic	Performance Requirement
VIDEO AMPLIFIER	
DC Restoration	Referenced to back porch
CRT DISPLAY	
Acceleration Potential	15 kV, within 5%, 1% regulation.
Heater Voltage	6.2 V @ 103 mA, within 5 %.
Faceplate	Flat.
Quality Area	12 cm horizontally by 9 cm vertically.
Diagonal (Of Quality Area)	15 cm (5.91 inches).
Deflection Angle	56 grads (50.4°).
Phosphor	P45.
Brightness	At least 150 fl.
Resolution	1100 lines center area @ 30 fl.
Corner Defocus	650 lines at 30 fl. 900 lines at 30 fl on 9 cm circle.
Resolution (Option 1 Only)	650 lines at screen center. 550 lines on 9 cm circle. 300 lines on 9 x 12 cm corners. Also refer to Linearity (Option 1).
POWER SOURCE	
Power Consumption (120 V AC, 60 ~)	50 W, 0.5 A maximum.
Line Voltage Range	
110 V AC (Nominal)	90 to 110 V ac. 99 to 121 V ac. 108 to 132 V ac.
220 V AC (Nominal)	180 to 220 V ac. 198 to 242 V ac. 216 to 250 V ac.
Line Frequency Range	48 to 440 Hz.
Power Requirements From An External Source (Option 20 Only)	
DC Supplies	+9 V within 10%, 300 mA, 1 V max ripple. +23 V within 10%, 1 A, 6 V max ripple. -22 V within 10%, 700 mA, 3 V max ripple.

TABLE 1-1 (CONT.)

Electrical Characteristics

Characteristic	Performance Requirement
Power Requirements (cont.)	
Monitor Regulated Output Voltages	Within 0.2%.
Total Power Consumed	45 W.

TABLE 1-2

Environmental Characteristics

Characteristic	Information
NOTE *This instrument will meet the electrical characteristics given in the Performance Requirement column of Table 1-1 over the following environmental limits.*	
Temperature	
Operating	0° to +50°C. (Options 14 and 15: 0° to +40°C with covers, 0° to +50°C without covers.)
Storage	-40° to +70°C.
Altitude	
Operating	To 4.6 km (15,000 feet).
Storage	To 15.2 km (50,000 feet).
Transportation	Qualified under National Safe Transit Committee Test Procedure 1A, Category II.

TABLE 1-3

Physical Characteristics

Characteristic	Information
Net Weight	
Standard	6.3 kg (13.8 lb).
Option 20	4.6 kg (10.1 lb).
Options 6, 23	7.2 kg (15.9 lb).
Option 28	7 kg (15.5 lb).
Overall Dimensions	
Standard	Refer to Figure 1-1.
Option 20 Only	Refer to Figure 1-2.
Detailed Dimensional Drawing	Refer to the detailed dimensional drawing in the foldout section.

STANDARD ACCESSORIES

1 ea.....Operators Manual
1 ea.....Instruction Manual
1 ea.....Linearity Graticule (Standard)
1 ea.....Smoke Gray Filter
1 ea.....Linearity Graticule (Option 1 only)

PACKAGING FOR SHIPMENT

If this instrument is to be shipped for long distances by commercial transportation, packaging the instrument in the original manner is recommended for maximum protection. The carton and packaging material in which your instrument was shipped should be saved and used for this purpose.

Also, if this instrument is to be shipped to a Tektronix Service Center for service or repair, attach a tag to the instrument showing the following: Owner of the instrument (with address), the name of an individual at your firm that can be contacted, complete instrument type and serial number, and a description of the service required.

If the original packaging is unfit for use or not available, package the instrument as follows:

1. Obtain a corrugated cardboard shipping carton having inside dimensions of no less than six inches more than the instrument dimensions; this will allow for cushioning. The carton should have a test strength of at least 275 lbs.

2. Surround the instrument with polyethylene sheeting to protect the finish of the instrument.

3. Cushion the instrument on all sides by tightly packing dunnage or urethane foam between the carton and the instrument allowing three inches on all sides.

4. Seal the carton with shipping tape or with an industrial stapler.

5. Mark the address of the Tektronix Service Center and your return address on the carton in one or more prominent locations.

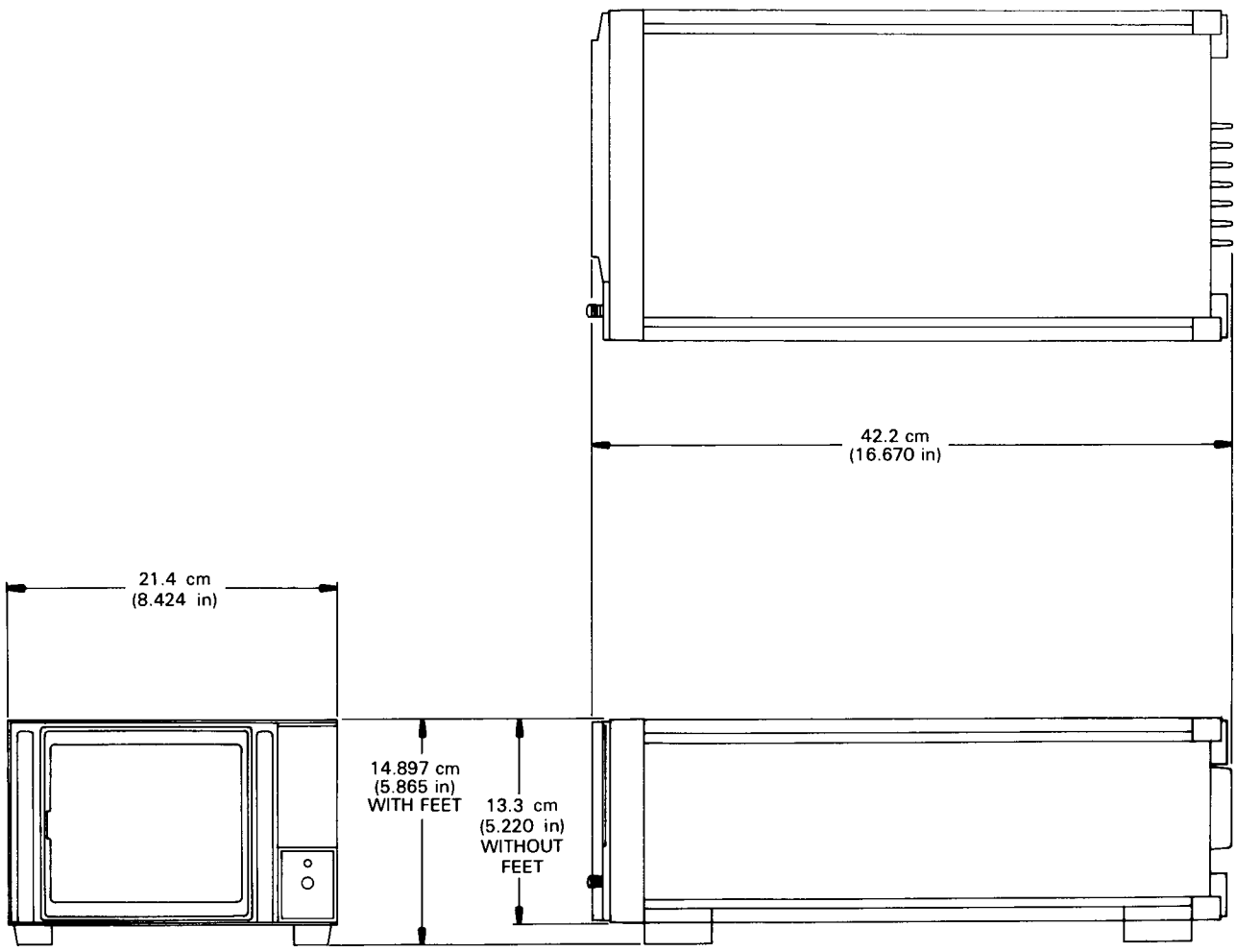

NOTE: DIMENSIONS ARE GIVEN WITH TOP FIGURE IN CENTIMETERS AND BOTTOM FIGURE IN INCHES. REFER TO DIAGRAMS AND CIRCUIT BOARD ILLUSTRATIONS.

2561-2

Figure 1-1. Dimensional drawing (Standard instrument package).

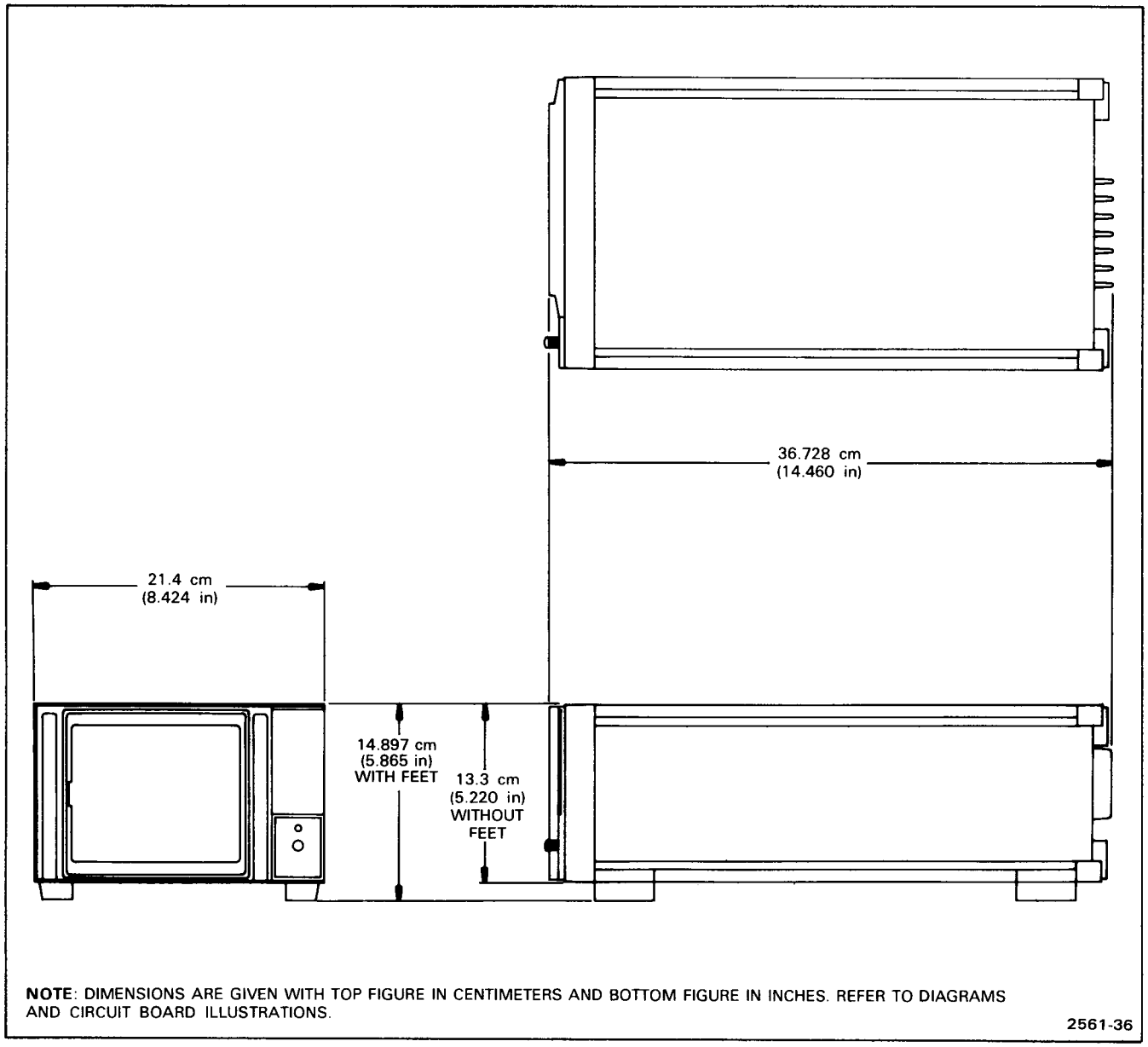

Figure 1-2. Dimensional drawing (Option 20 only).

OPERATING INSTRUCTIONS

AMBIENT TEMPERATURE CONSIDERATIONS

This instrument can be operated where the ambient air temperature is between 0° and +50° C (+32° and +122° F), and can be stored in ambient temperatures between -40° and +70° C (-40° and +158° F). After being stored in temperatures beyond the above operating limits, allow the chassis temperature to return to within the operating limits before applying power. Allowing the Monitor to operate at an ambient temperature substantially higher than that specified may result in poor reliability as well as inaccurate performance.

When the 634 is mounted in a rack with other equipment, it is important that the ambient temperature surrounding the Monitor does not exceed +50° C (+122° F). Additional clearance for convection, or forced ventilation methods (fan), may be needed to maintain ambient temperatures below +50° C (+122° F). Reliability and performance of the 634 will be affected if the ventilation holes in the protective panels are obstructed, or if the 634 is operated at an ambient temperature higher than +50° C (+122° F). Other environments and mounting configurations may require additional cooling measures.

CONTROLS AND CONNECTORS

Controls and connectors necessary for operation of the 634 Monitor are located on the front and rear panels of the instrument. To make full use of the capabilities of this instrument, the operator should be familiar with the function and use of each external control and connector. The front-panel controls are shown and described in Figure 2-1. Brief descriptions of the standard rear-panel controls and connectors are given in Figure 2-2. The Option 20 rear panel is illustrated in Figure 2-3.

INPUT SIGNAL REQUIREMENTS

The 634 Monitor requires a negative sync-tip video input signal for proper operation. The input signal amplitude range should not exceed 0.35 to 2 volts peak-to-peak for normal operation, or a maximum of 5 volts peak.

OPERATORS CHECKOUT PROCEDURE

The following procedure is provided to aid in obtaining a display on the 634 Monitor and may be used as a check of basic instrument operation. The procedure may be used for incoming inspection to verify proper operation, and may also be used by the operator for instrument familiarization. Only instrument functions, and not measurement quantities or specifications, are checked in this procedure. Therefore, a minimum amount of test equipment is required. If performing the Operators Checkout Procedure reveals improper performance or instrument malfunction, first check the operation of associated equipment, then refer to qualified service personnel for repair or adjustment of the instrument.

TEST EQUIPMENT REQUIRED

The following test equipment was used as a basis to write the Operators Checkout Procedure. Other test equipment, which meets these requirements, may be substituted. When other equipment is substituted, the control settings or set up may need to be altered.

1. Sync Pulse and Test Signal Generator

   Description: Negative-synchronized video signal generator.

   Type Used: TEKTRONIX 1470 NTSC Color Sync Test Signal Generator.

2. Cable

   Description: Coaxial; length, 42 inches; connectors, BNC male-to-male; impedance, 75 ohms.

   Type Used: Tektronix Part 012-0074-00.

PRELIMINARY SETUP

1. Connect the 634 Monitor power cord to a suitable power source.

NOTE

Check the line voltage information indicated on the rear panel. If the source voltage is not within this range, refer qualified service personnel to the servicing information sections of the 634 Instruction Manual.

2. Open the access door on the front panel and set the controls as follows:

BRIGHTNESS	Fully counterclockwise
FOCUS	Midrange
CONTRAST	Midrange
POWER	Out (PULL ON)

3. Allow at least one minute for the instrument to warm up.

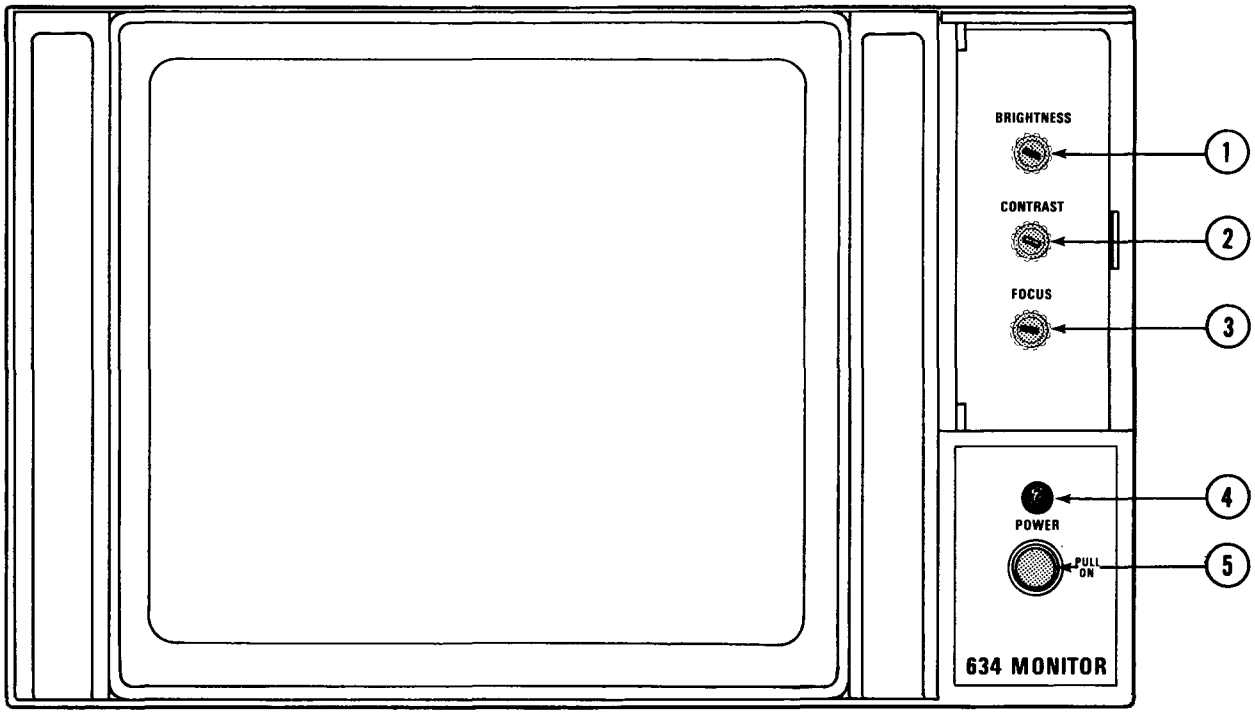

(1) **BRIGHTNESS**—Provides adjustment of brightness (black and white) level.

(2) **CONTRAST**—Provides adjustment of contrast (white) level.

(3) **FOCUS**—Provides adjustment to obtain a well-defined display.

(4) **POWER (Indicator)**—Illuminates when instrument is on.

(5) **PULL ON**—Controls power to the Monitor. Instrument is on when the knob is out.

2561-4

Figure 2-1. Front-panel controls and indicators.

@

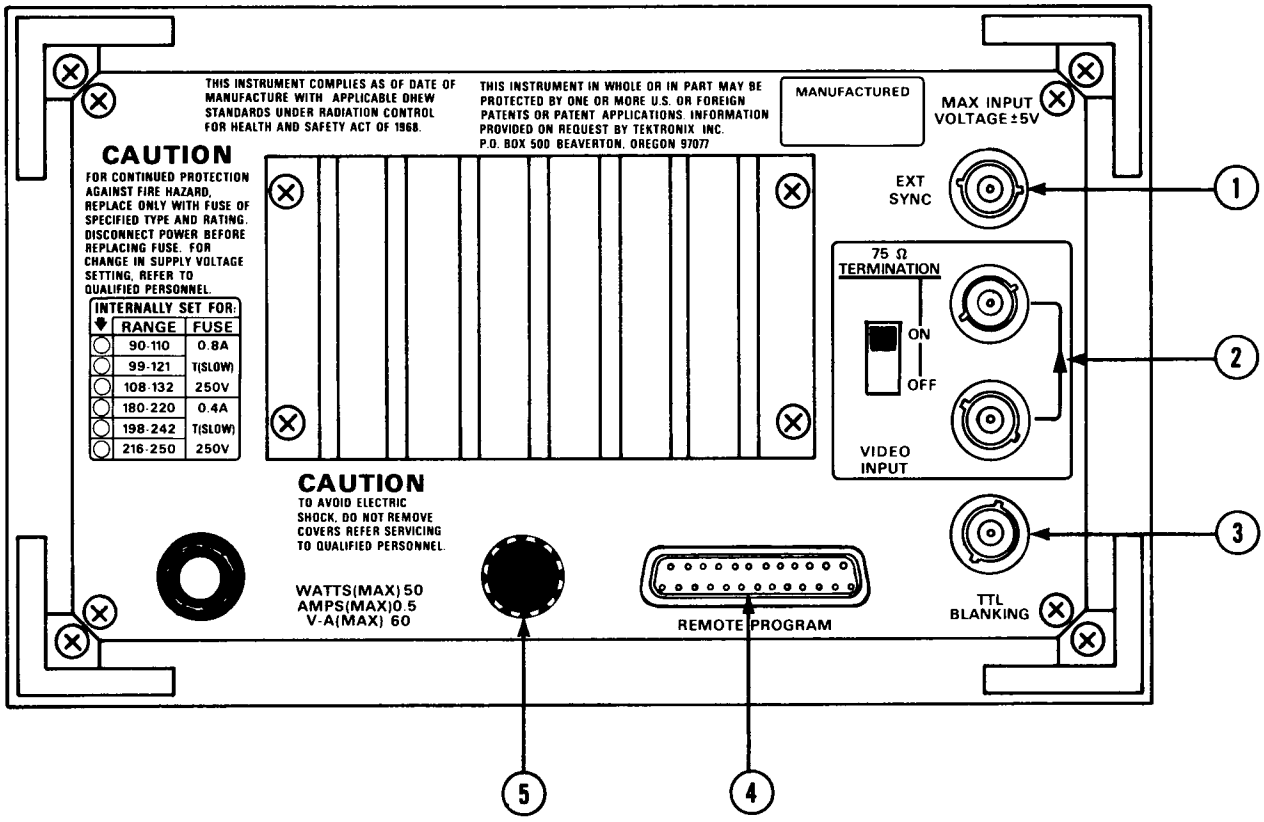

(1) **EXT SYNC (Option 11 only)**—Provides a means to connect external signals for synchronizing the Monitor.

(2) **VIDEO INPUT**—Provides a means to connect a video signal to the Monitor. A video signal connected to either of the two BNC connectors will be properly terminated when the 75 Ω TERMINATION switch is in the ON position. Several Monitors can be operated from a single video source by connecting them in series (utilizing the unused connector) and setting the 75 Ω TERMINATION switch to the OFF position.

(3) **TTL BLANKING**—Provides a means to connect an external TTL zero level for screen blanking.

(4) **REMOTE PROGRAM (Option 16 only)**—Multi-pin connector provides for remote control of the BRIGHTNESS, CONTRAST, and FOCUS controls; a video reverse switch (Option 13 only), and remote inputs for the video, external sync (Option 11 only), and TTL Blanking signals.

(5) **LINE FUSE**—120 V, 0.8 A slow blow, or 240 V, 0.4 A slow blow (use 3AG 250 V fuse).

2561-5

Figure 2-2. Rear-panel controls and connectors.

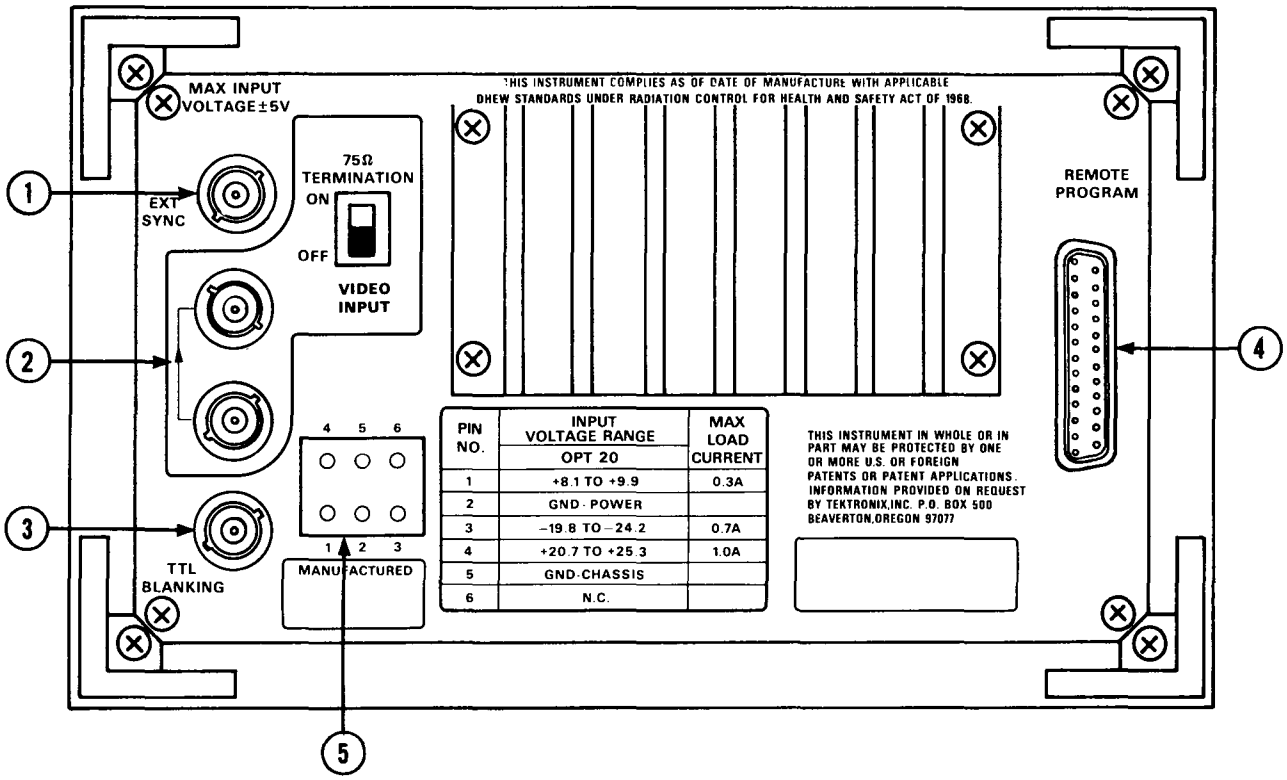

(1) — **EXT SYNC (Option 11 only)**—Provides a means to connect external signals for synchronizing the Monitor.

(2) — **VIDEO INPUT**—Provides a means to connect a video signal to the Monitor. A video signal connected to either of the two BNC connectors will be properly terminated when the 75 Ω TERMINATION switch is in the ON position. Several Monitors can be operated from a single video source by connecting them in series (utilizing the unused connector) and setting the 75 Ω TERMINATION switch to the OFF position.

(3) — **TTL BLANKING**—Provides a means to connect an external TTL zero level for screen blanking.

(4) — **REMOTE PROGRAM (Option 16 only)**—Multi-pin connector provides for remote control of the BRIGHTNESS, CONTRAST, and FOCUS controls; a video reverse switch (Option 13 only), and remote inputs for the video, external sync (Option 11 only), and TTL Blanking signals.

(5) — **EXTERNAL-POWER INPUT CONNECTOR**—Provides a means to connect power to the Monitor from an external source. Pin 1, +9 V dc; pin 2, supply common; pin 3, -22 V dc; pin 4, +23 V dc; and pin 5, protective grounding.

2561-36

Figure 2-3. Option 20 rear-panel controls and connectors.

DISPLAY FUNCTIONS

1. Perform the above Preliminary Set Up procedure.

2. Notice a raster will appear on the screen, increasing in brightness as you slowly turn the BRIGHTNESS control clockwise.

CAUTION

A high brightness level combined with a stationary image may damage the crt phosphor. Therefore, set the BRIGHTNESS control to the minimum necessary for good visibility.

3. Connect the 1470 signal generator to the lower VIDEO INPUT connector on the rear panel and set the 75 Ω TERMINATION switch to ON. Set the 1470 for window signal output.

4. Adjust the FOCUS and CONTRAST controls for a sharp, well-defined display.

5. Set the rear-panel 75 Ω TERMINATION switch to OFF.

6. Notice that the raster background level has increased.

7. Set the 75 Ω TERMINATION switch to ON.

8. Disconnect the 1470 signal generator.

This completes the Operators Checkout Procedure for the 634 Monitor.

WARNING

THE FOLLOWING SERVICING INSTRUCTIONS ARE FOR USE BY QUALIFIED PERSONNEL ONLY. TO AVOID PERSONAL INJURY, DO NOT PERFORM ANY SERVICING OTHER THAN THAT CONTAINED IN OPERATING INSTRUCTIONS UNLESS YOU ARE QUALIFIED TO DO SO. REFER TO OPERATORS SAFETY SUMMARY AND SERVICE SAFETY SUMMARY PRIOR TO PERFORMING ANY SERVICE.

INSTALLATION

PROTECTIVE COVERS

The standard 634 Monitor is shipped from the factory without protective covers. To assure operator safety, the Monitor should either be installed within associated equipment cabinets or provided with it's own protective covers (Option 23 or 28). If the Monitor is to be rackmounted or confined with other equipment, assure that the Monitor's ambient temperature does not exceed +50° C.

OPERATING POWER INFORMATION

This instrument can be operated from either a 110-volt or 220-volt nominal line-voltage source, 48 to 440 hertz. In addition, three regulating ranges are provided for each nominal line-voltage source.

CAUTION

To prevent damage to the instrument, always check the line-voltage information indicated on the rear panel before applying power to the instrument.

POWER CORD INFORMATION

WARNING

This instrument is intended to be operated from a single-phase earth-referenced power source having one current-carrying conductor near earth potential. Operation from power sources where both current-carrying conductors are live with respect to earth (such as phase-to-phase on a three-wire system) is not recommended, since only the Line conductor has over-current (fuse) protection within the instrument.

This instrument has a three-wire power cord with a polarized two-pole, three-terminal plug for connection to the power source and safety-earth. The safety-earth terminal of the plug is directly connected to the instrument frame. For electric-shock protection, insert this plug only in a mating outlet with a safety-earth contact.

Do not defeat the grounding connection. Any interruption of the grounding connection can create an electric-shock hazard. Before making external connections to this instrument, always ground the instrument first by connecting the power cord to a properly mated power outlet.

TABLE 3-1

Power-Cord Conductor Identification

Conductor	Color	Alternate Color
Line	Brown	Black
Neutral	Light Blue*	White
Safety Earth	Green/Yellow	Green/Yellow

*Tinned copper conductor.

The power-cord plug required depends upon the ac input voltage and the country in which the instrument is to be used. Should you require a power-cord plug other than that supplied with your instrument, refer to the standards listed in Table 3-2.

TABLE 3-2

Location of Power-Cord Configuration Information

Nominal Line Voltage	Reference Standards
110 V AC	[1]ANSI C73.11 [2]NEMA 5-15P (Hospital Grade)
220 V AC	ANSI C73.20 [3]AS C112 [4]BS 1363 [5]CEE 7, sheets IV, VI and VII NEMA 6-15-P

[1]ANSI-American National Standard Institute

[2]NEMA-National Electrical Manufacturer's Association

[3]AS-Standards Association of Australia

[4]BS-British Standards Institute

[5]CEE-International Commission on Rules for the Approval of Equipment

For medical-dental applications, use NEMA 5-15-P (Hospital Grade) plug for 110-volt operation, or NEMA 6-15-P plug for 220-volt operation.

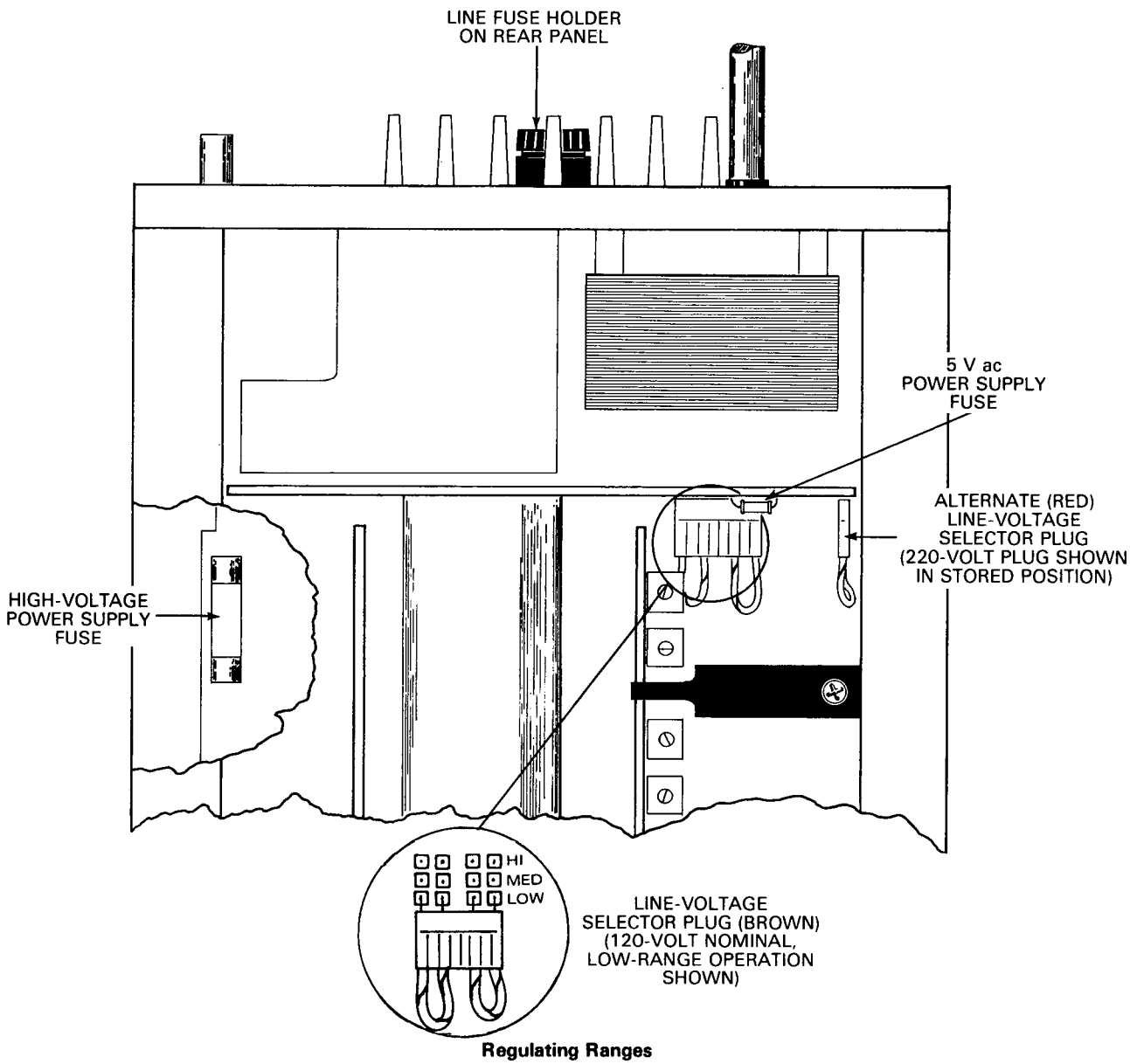

Regulating Ranges

Line-Voltage Selector Position	Regulating Range and Fuse Data	
	120 Volts (Nominal)	220 Volts (Nominal)
LO	90 V ac to 110 V ac	180 V ac to 220 V ac
MED	99 V ac to 121 V ac	198 V ac to 242 V ac
HI	108 V ac to 132 V ac	216 V ac to 250 V ac
Line Fuse Data	0.8 slow-blowing type	0.4 A slow-blowing type
High-Voltage Power Supply Fuse	0.7 A slow-blowing type	
5 V ac Power Supply Fuse	5A fast-blowing type	

2561-6

Figure 3-1. Location of line-voltage selector plugs, regulating-range pins, and fuses.

@

LINE-VOLTAGE AND REGULATING-RANGE SELECTION

CAUTION

Damage to the instrument may result from incorrect placement of the line-voltage selector plug.

To select the correct nominal line voltage and regulating range, proceed as follows:

1. Disconnect the instrument from the power source.

2. Insert the proper line-voltage selector plug (the brown plug for 110-volt operation or the red plug for 220-volt operation) on the line-voltage selector pins (located on the Power Supply board) labeled for the desired nominal line-voltage range. Refer to Figure 3-1 for location and additional information.

3. Remove the line fuse from the fuse holder and check for the correct rating. Replace it with one having the correct rating, if necessary. Refer to Figure 3-1 for fuse information and location.

4. Change the nominal line-voltage information indicated by the voltage-range indicating screw on the 634 rear panel. Use a screwdriver to remove the indicating screw and place it in the appropriate hole to indicate the internal line-voltage range selector plug setting.

5. Apply power to the Monitor.

OPTION 20 POWER REQUIREMENTS

The Option 20 Monitor does not have a line fuse or a power cord, and will operate only with the correct dc power applied to the the rear-panel power-input connector. Connect the external dc power to the Monitor as follows (see Fig. 3-2):

+9 V dc (pin 1) ..... +8.1 to +9.9 V dc, 0.3 A maximum, 1 V maximum ripple.

Common (pin 2) ..... Connect to supply common of unit(s) supplying the power.

-22 V dc (pin 3) ..... -19.8 to -24.2 V dc, 0.7 A maximum, 3 V maximum ripple.

+23 V dc (pin 4) ..... +20.7 to +25.3 V dc, 1 A maximum, 6 V maximum ripple.

Protective Grounding (pin 5) ..... Connect to protective ground of the unit(s) supplying the power.

Fuse protection is provided on the +9 V dc, -22 V dc, and +23 V dc inputs. See Figure 3-3 for the location and rating of the Option 20 input fuses.

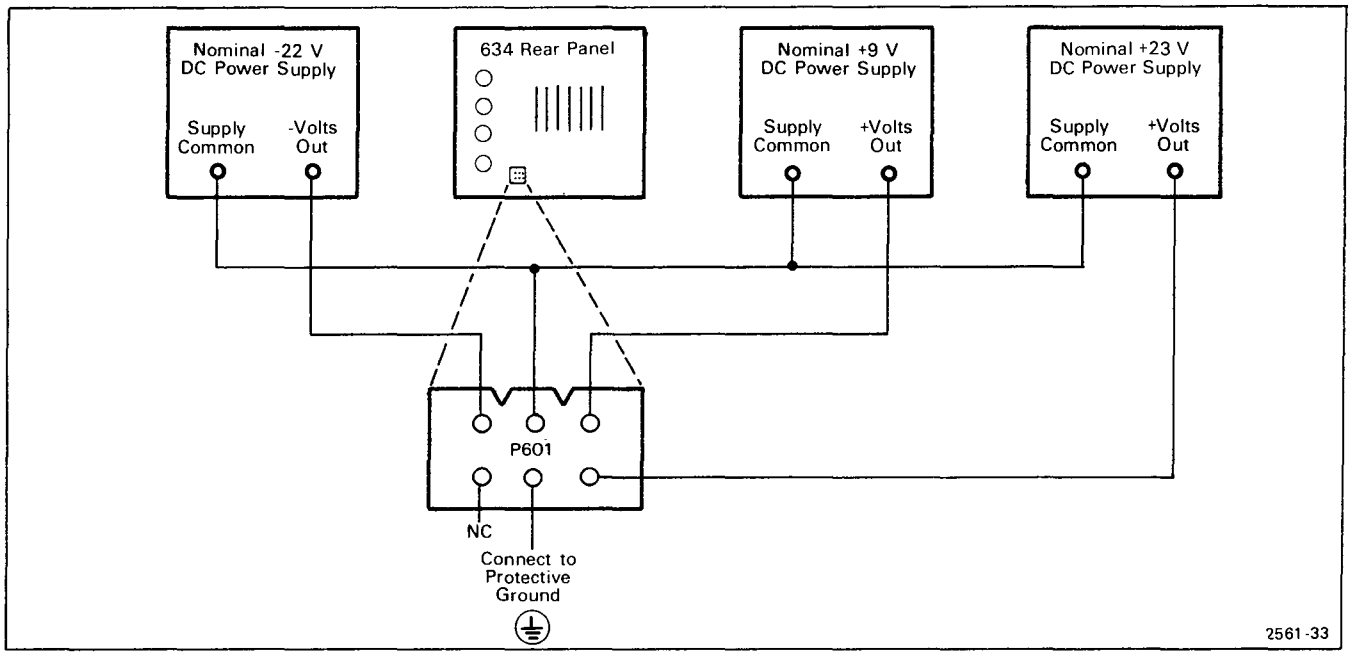

Figure 3-2. Proper application of power to the 634 Option 20 Monitor.

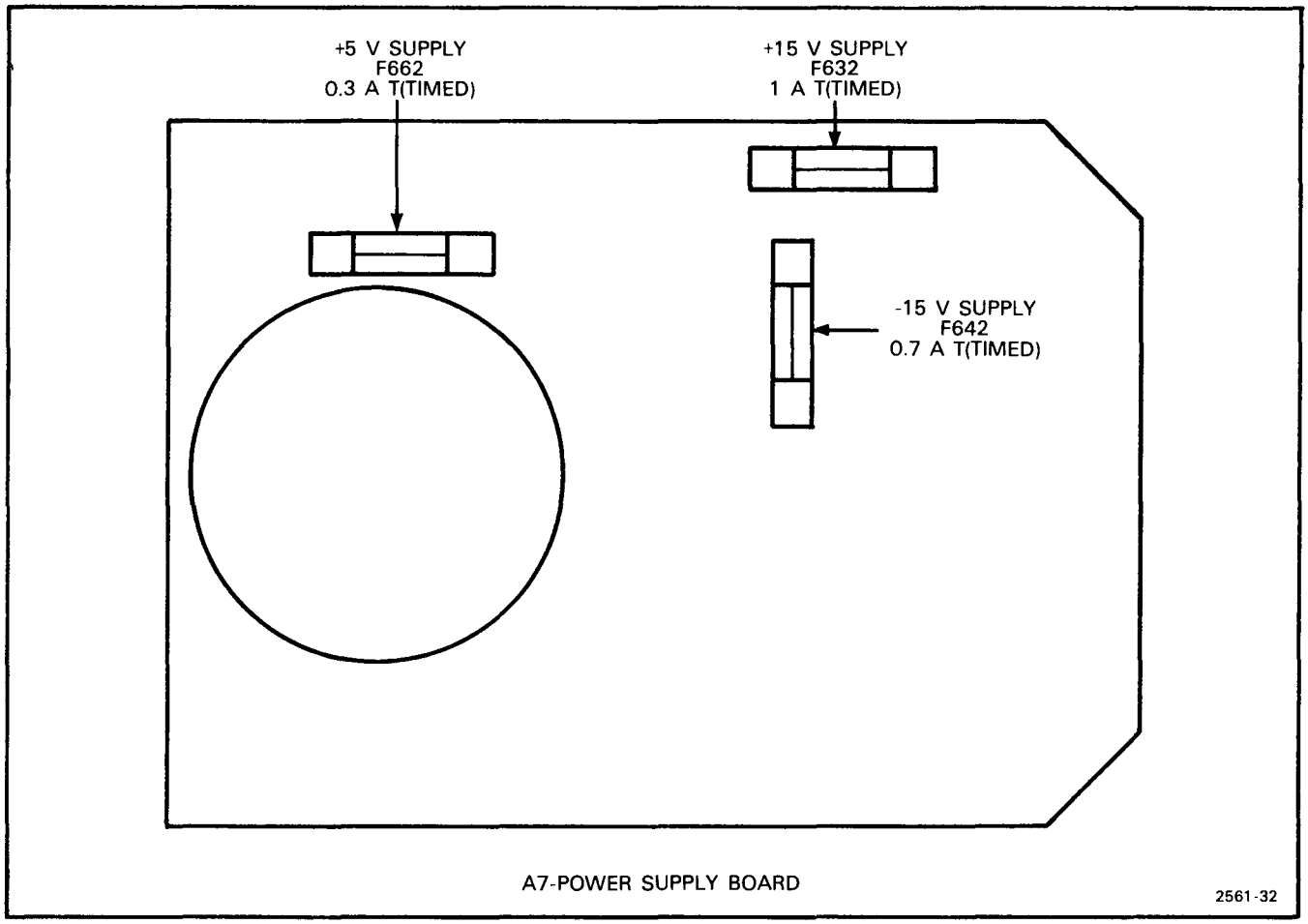

Figure 3-3. Location and rating of the Option 20 input fuses.

INSTALLATION IN PATIENT-CARE FACILITIES

WARNING

Do not use the VIDEO INPUTS for direct-patient connection. Signal currents at these connectors, as well as leakage currents, may exceed values considered non-hazardous for direct-patient connection.

Although this Monitor is not to be connected directly to a patient, interconnecting this Monitor to other equipment can result in the application of excessive current to a patient. It is extremely important that the interconnection is made in accordance with NFPA 76B-T, Tentative Standard for the Safe Use of Electricity in Patient Care Areas of Health Care Facilities, section 3038, "Signal Transmission Between Appliances". Copies of NFPA 76B-T can be obtained from the National Fire Protection Association, 470 Atlantic Avenue, Boston, Mass. 02210.

Among the situations involving the above-mentioned patient hazard is one in which two or more pieces of interconnected equipment are grounded at locations remote from one another. The standard mentioned in the preceding warning describes both this hazard and the appropriate corrective measures.

VIDEO SIGNAL CONNECTIONS

The 634 Monitor provides two VIDEO INPUT (BNC) connectors and a 75Ω TERMINATION switch on the rear panel. The video input signal can be properly terminated (into 75Ω) with either a single Monitor, or several monitors connected in series. Refer to Figure 3-4 for proper connection and termination information.

SYNCHRONIZATION

The Sync Separator board is shipped from the factory with the Back Porch/Sync Tip selector strap in the Back

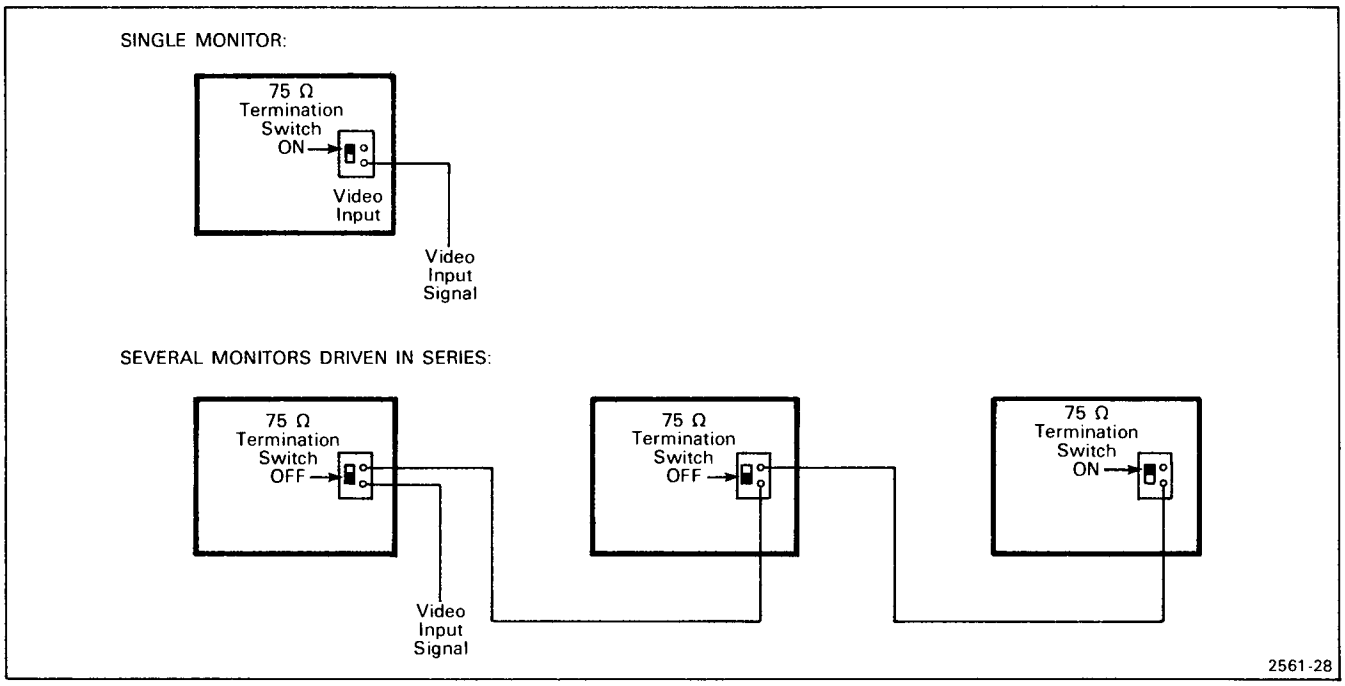

Figure 3-4. Connection and termination of the video input signal to maintain a 75 Ω impedance.

Porch position (refer to Fig. 3-5). If the back porch portion of the horizontal sync pulse fails to trigger the Back Porch Gating Pulse Generator at the correct interval (horizontal stripes of varying brightness), change the strap to the Sync Tip position. This will allow the generator to be triggered on the leading edge of the horizontal sync pulse. Refer to the Sync Separator schematic (Diagram 2) in the foldout section.

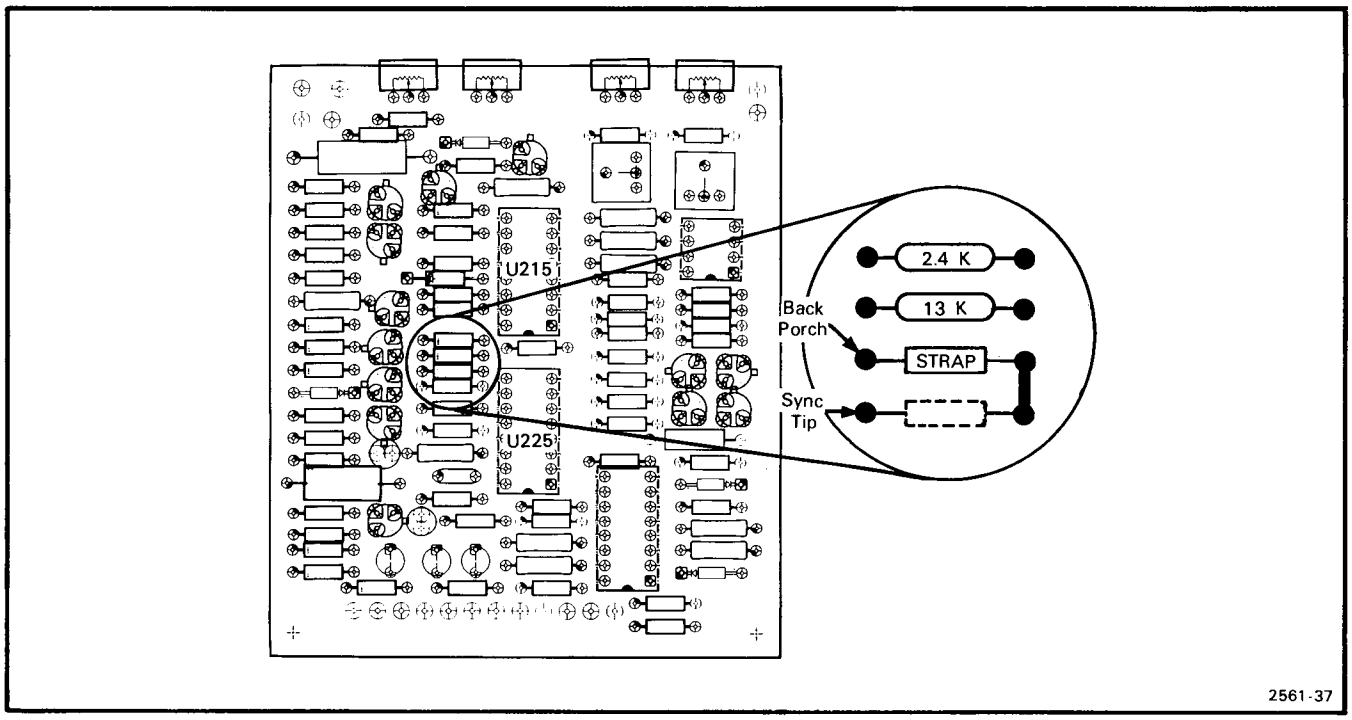

Figure 3-5. Sync Separator board illustration of Back Porch/Sync Tip strap positions.

EXTERNAL SYNC (OPTION 11 ONLY)

The Option 11 Monitor includes an EXT SYNC (BNC) connector on the rear panel which connects internally to a sync selector switch on the Interface board. To operate the Monitor from an external sync signal, connect the signal to the rear-panel connector and position the slide switch to Ext.

RACKMOUNTING INFORMATION

The 634 can be operated in a standard 19-inch instrument rack with front and rear holes that conform to universal hole spacing. Kits are available to convert the 634 from the cabinet to a rackmounted configuration. Complete instructions are included in the kits. A brief description of each available conversion kit is given here. Consult your Tektronix Field Office or representative for additional information.

CAUTION

Reliability and performance of the 634 will be affected if the ventilation holes in the protective panels are obstructed, or if the 634 is operated in an ambient temperature higher than +50° C. Forced ventilation methods may be needed.

CABINET-TO-RACKMOUNT CONVERSION

Tektronix Part 016-0402-00. Mounts one 634 Monitor in a standard 19-inch wide instrument rack. The kit is equipped with a slide-out assembly, protective covers, securing hardware, and a blank front panel to cover the second instrument opening in the rack. Complete rackmounting instructions are included in each kit.

Tektronix Part 016-0403-00. Mounts two 634 Monitors side-by-side in a standard 19-inch wide instrument rack. The kit includes a slide-out assembly, protective covers, and securing hardware. Complete rackmounting instructions are included with each kit.

INSTRUMENT DIMENSIONS

A drawing showing the major dimensions of the standard 634 Monitor is shown in Figure 1-1, and the Option 20 version is shown in Figure 1-2 (General Information section). Further details and tolerances are shown on the Detailed Dimensional Drawing foldout page in Section 9, Diagrams and Circuit Board Illustrations.

THEORY OF OPERATION

This section of the manual describes the circuitry in the 634 Monitor. The description begins with a discussion of the instrument using the block diagram in Figure 4-1, and continues in detail, showing the relationships between the stages in each major circuit.

BLOCK DIAGRAM

The following discussion is provided to aid in understanding the overall concept of the 634 Monitor. A basic block diagram is shown in Figure 4-1.

Video information is fed through the VIDEO INPUT connector to the INPUT AMPLifier. One output of the INPUT AMPLifier is fed to the SYNC SEParator; the other is combined with the CONTRAST and BRIGHTNESS functions, and coupled to the grid of the crt through the VIDEO OUTput AMPLifier. The SYNC SEParator removes the video information, and the resultant sync pulses are fed through the HORIZontal and VERTical RAMP GENerators to the HORIZ YOKE DRIVER via the GEOMetry CORRection stage.

The HORIZontal RAMP GENerator and VERTical RAMP GENerator stages produce linear ramps to be processed by the GEOMetry CORRection stage. The HORIZontal YOKE DRIVER produces the current required to drive the horizontal deflection yoke. The DYNAMIC FOCUS stage processes the correction voltage from the GEOMetry CORRection stage and couples the information to the crt focus element. The corrected vertical ramp from the GEOMetry CORRection stage is fed to the VERTical YOKE DRIVER which supplies the necessary vertical yoke current. Samples of the HORIZontal YOKE DRIVER output are combined with the vertical sync pulse from the VERTical RAMP GENerator in the VERTical and HORIZontal BLANKING AMPLifier. The output of the VERTical and HORIZontal BLANKING AMPLifier is fed to the cathode of the crt to provide retrace blanking. The LV (low voltage) POWER SUPPLY and the HV (high voltage) POWER SUPPLY provide the voltages necessary for operation of this instrument.

DETAILED CIRCUIT OPERATION

Complete schematic diagrams are provided in Section 9, Diagrams and Circuit Board Illustrations. The numbers inside the diamond after a heading in the following discussions refer to the schematic diagram for that circuit. The schematic diagrams contain wide shaded borders around the major stages of the circuits to conveniently locate the components mentioned in the following discussion. The names of each stage, given in a shaded box on the diagram, matches the sub-heading in the discussion of that schematic diagram.

VIDEO AMPLIFIER ◇1◇

The Video Amplifier processes the video input signals and provides final amplification to drive the crt control grid. A schematic diagram of the Video Amplifier is shown on diagram 1. A detailed block diagram, showing each major stage of this circuit, is superimposed on the schematic with shaded lines. The stage names (given as sub-headings in the following discussion) can be found in the shaded blocks on diagram 1.

INPUT AMPLIFIER

Video information to be displayed is coupled to the Input Amplifier through L102. Components L102 and C105 (Return Loss Adj) match the VIDEO INPUT impedance with that of the Input Amplifier. The Input Amplifier consists of Q111-Q123 connected to a differential configuration, with Q114 used as the video channel amplifier and Q124 as the sync pulse amplifier.

Video information from the output of Q114 is sent through a dc level shifter (Q126) that, by the adjustment of R125, centers the video signal around ground. The resultant is then applied to pin 3 of U150. Video information at pin 3 and dc currents at pins 10 and 12 combine in U150 to produce a current drive (determined by the positions of R85 BRIGHTNESS, R90 CONTRAST, and R95 Minimum Contrast) to the base of Q156.

VIDEO OUTPUT AMPLIFIER

Level shifter Q156 produces a two times current gain of the video signal to be injected into the Video Output Amplifier. Transistor Q167 determines the bias for the input of the operational amplifier of which Q171, Q173, Q181, Q182, Q191, Q192 are the active components. Feedback for the amplifier is provided through R176 and R177. High-current, low-impedance drive is provided by the complimentary configuration of emitter followers Q171-Q173. The dc and low frequency signals from Q171 and Q173 are coupled to the base of Q181, and the high frequency signals are capacitively coupled through

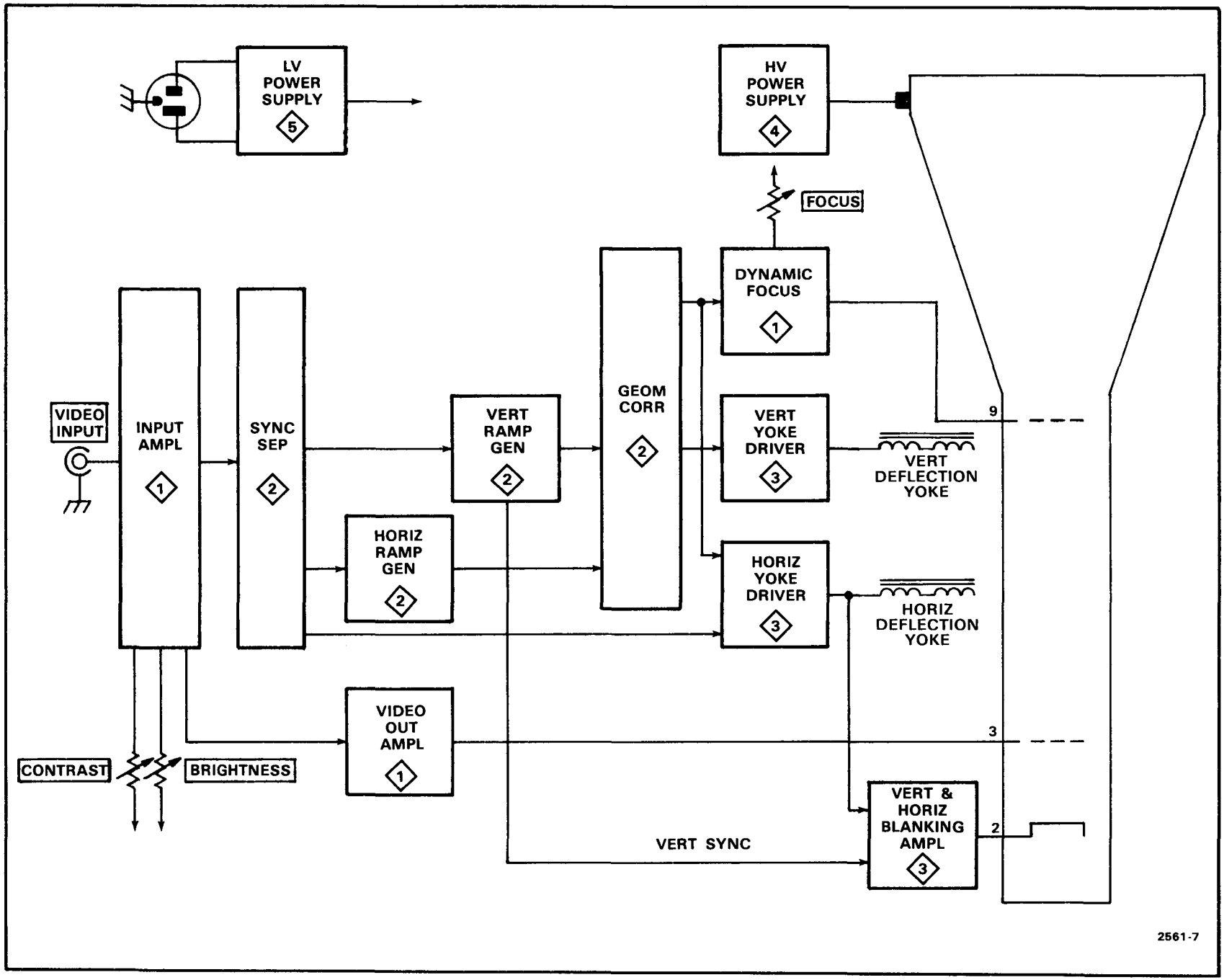

Figure 4-1. 634 Monitor block diagram.

C186 to the base of Q191. Complimentary amplifier Q181 and Q191 provide final gain for the video output signals, while emitter followers Q182 and Q192 supply grid drive to pin 3 of V485 (crt).

DC RESTORER

As the picture on the crt changes, the APL (average picture level) circuit maintains the dc level and therefore picture brightness. APL samples at the emitter of Q192 (output of the Video Output Amplifier) are fed through emitter follower Q77 to Q56. Field effect transistor Q56 is turned on during the back porch duration (3 μs) of the horizontal sync pulse to charge C56 to the APL reference at the emitter of Q77. The output of the DC Restorer comparator (Q58 and Q62) changes conversely when the APL reference at C56 and the base level at Q62 (set by R65, Restore Level) differ. The comparator output is amplified by Q60 and injected at the base of Q77, input of the Video Output Amplifier.

DYNAMIC FOCUS

The Dynamic Focus regulates the voltage level fed to the focus element (pin 9) of the crt to compensate for defocusing caused by the flatness of the crt face. In order for the electron beam to focus at the edges, a more positive voltage on the focus element is required.

Focus timing information is injected at the base of comparator Q41 through R35 (Corner Focus Adjust). The output is then amplified and fed to emitter coupled output amplifier Q21 and Q22. Feedback through R23 allows the output to respond to the focus timing information from U280-15, diagram 2. The feedback maintains the voltage across R41 to the same voltage level as that across R35. Resistor R35, allows adjustment to optimize the spot resolution. The output of Q22 is coupled to the crt through T410 on diagram 4.

100 V POWER SUPPLY

The Dynamic Focus requires + and -100 V for proper operation.

Transformer T410 on diagram 4 supplies 100 V ac to the interface board through J400 pin 12. The negative portion of the 100 V ac is developed by CR12 and filtered by C12. The positive portion of the 100 V ac is developed by CR11 and filtered by C11. Diodes CR13 and CR17 supply the required startup voltage for the High Voltage Oscillator.

SYNC SEPARATOR ◇2

The Sync Separator initiates the back porch gating pulse for dc restoration and provides both vertical sync to time every scanning field correctly at 60 Hz and horizontal sync to time the scanning lines at 15,750 Hz.

A detailed block diagram, showing each major stage of this circuit, is superimposed on the schematic with shaded lines. The stage names (given as sub-headings in the following discussion) can be found in the shaded blocks on diagram 2.

SYNC STRIPPER

Video information from S124 (diagram 1) is fed to a Sync Stripper which removes video information and leaves only sync pulses. Video information is injected at pin 3 of the Sync Separator board. High gain amplifier Q211 and Q212 is an operational amplifier with feedback through R214. The clamping action of Q205 and associated circuitry allows only the desired portion of the video input to be amplified by Q211 and Q212. The output at the collector of Q212 swings between 0 volts and approximately 5 volts. Transistor Q216 clips the sync pulses leaving the sync tips which are injected into the Vertical Ramp Generator, the Back Porch Gating Pulse Generator, and to the Horizontal Ramp Generator and Horizontal Driver (on diagram 3). A sync pulse at U225B pin 11 provides an output to the Horizontal Ramp Generator, Horizontal Driver, and to U225A pin 4. Multivibrator U225A provides an output from pin 6 to U225B pin 12 of proper duration to lock out every alternate pulse. Pulse duration from U225A is determined by R253 and C253.

BACK PORCH GATING PULSE GENERATOR

The jumper located at the input to U215A (Back Porch Gating Pulse Generator) allows the user to either trigger U215A on the back porch of the sync pulse from Q216 or the leading edge of the sync tip from U225B-10. Multivibrator U215A, and timing components R218 and C218, produce the gating pulse on the horizontal sync pulse with the required 3 μs back porch for input to the DC Restorer.

VERTICAL RAMP GENERATOR

Sync pulses from Q216 to the Sync Stripper are integrated by C221-R220 and fed to shaper U215B. The vertical sync + output of U215B is fed to the Vertical Ramp Generator and through pin 7 of the Yoke Driver board to the Horizontal and Vertical Retrace Blanking Amplifier circuit on diagram 3. The output of multivibrator U215B is fed to the Vertical Ramp Generator comprised of the following switching components Q228, Q231; integrating components R229, R230, and C235; and emitter follower Q237. The ramp output of Q237 is fed to level shifter U245B with the resultant 7 volts p-p linear ramp injected at pin 12 of U280, Geometry Correction integrated circuit.

HORIZONTAL RAMP GENERATOR

Horizontal sync pulses from Pin 9 of retriggerable multivibrator U225B are fed to the Horizontal Ramp Generator and through pin 10 of the Yoke Driver board to the Horizontal Drive circuit on diagram 3. These Sync pulses from U225B-9 are fed to the Horizontal Ramp Generator which is made up of switching components Q258 and Q261, integrating components R259, R260, C265, and emitter follower Q267. The ramp output from Q267 is fed to level shifter U245A with the resultant 7 volt linear ramp injected at pin 6 of U280, Geometry Correction IC.

CRT GEOMETRY CORRECTION

Geometry Correction IC, U280, provides the vertical corrected ramp required by the Vertical Yoke Driver (on diagram 3), and the focus required by both the Horizontal Size and Positioning (on diagram 3) and the Dynamic Focus (on diagram 1).

YOKE DRIVER 3

The Yoke Driver processes the information from the Sync Separator to supply current to the horizontal and vertical yokes and to produce retrace blanking. A schematic diagram of the Yoke Driver is shown on diagram 3. A detailed block diagram, showing each major stage of this circuit, is superimposed on the schematic with shaded lines. The stage names (given as sub-headings in the following discussion) can be found in the shaded blocks on diagram 3.

VERTICAL YOKE DRIVER

The Vertical Yoke Driver is an operational amplifier with feedback through L335 and R313. Resistor 312 serves to sense current load at the output of the amplifier. The vertical corrected ramp from the Sync Separator board is fed to comparator Q317-Q316. The base of Q316 is controlled by the current level through the yoke. The output of Q317 is inverted by Q327 and fed to push-pull emitter driver Q330-Q331, whose output supplies the necessary vertical yoke current. During retrace, transistor Q326 supplies current to the yoke from C353; at the same time, CR330 is reverse biased thereby disconnecting the +15 volt supply from the output amplifier. Vertical retrace voltage at the emitter of Q326 is developed by C353, CR353, and R353 and supplied from T353 pin 2 (flyback transformer).

HORIZONTAL SIZE AND POSITIONING

The focus ramp sampled at pin 15 (focus volt out) of U280 on diagram 2 is injected at pin 12 of the Yoke Driver board. The amplitude of the ramp is adjusted by R340 (Side Pincushion) and combined at U350 pin 2 with the dc level generated by R345, Horiz Size. Operational amplifier U350 drives Q351, whose output determines the voltage across flyback transformer T353.

HORIZONTAL DRIVE

Horizontal sync pulses and the output of the flyback transformer (T353 pin 3) are applied to U380 pins 3 and 4 respectively. The phase of these two signals is compared and the resultant signal at U380 pin 1 is applied to current amplifier Q385. The output of Q385 is fed to a current step-up transformer (T390), the output of which turns on Q390, thereby allowing current flow through the horizontal yoke. When Q390 turns off, the field around L335B collapses, charging C390 to its peak value. Capacitor C390 then discharges back through L335B. Diode CR390 serves as a catching diode (prevents C390 and L335B from ringing). Capacitor C364 compensates for the flat face of the crt. When current through the coil (L335B) increases, the charge on C364 increases, thus decreasing the voltage across L335B. Correction for the resistance of the coil is accomplished by L364.

HIGH VOLTAGE AND BLANKING AMPL ◇4◇

The High Voltage and Blanking Amplifier provides the +15,000 volts and the cathode drive necessary for operation of the crt. A schematic diagram of the High Voltage and Blanking Amplifier is shown on diagram 4. A detailed block diagram, showing each major stage, is superimposed on the schematic with shaded lines. The stage names (given as sub-headings in the following discussion) can be found in the shaded blocks on diagram 4.

HIGH VOLTAGE OSCILLATOR

A repetitive, sinusoidal signal is produced by a regenerative feedback oscillator in the primary of T410 and induced into its secondary. Current drive is furnished by Q415, Q416 and Q417. The conduction of the High-Voltage Oscillator transistors is controlled by the output voltage of the Error Amplifier.

ERROR AMPLIFIER

Regulation of the high voltage supply is accomplished by applying a sample of the +15,000 volts from the voltage divider incorporated in U432, to the oscillator control operational amplifier, U445. An increase or decrease of voltage at pin 2 of U445 causes a corresponding decrease or increase in amplitude of the signal applied to the High Voltage Oscillator.

VOLTAGE LIMITER

The output of the High Voltage Oscillator is sampled and fed through a p-p detector to emitter follower Q413. When the output exceeds the reference level set by zener diode VR413, transistor Q413 turns on Q427, thus removing the base drive to the oscillator through Q416.

CUTOFF ADJUSTMENT

The voltage at pin 8 of T410 is rectified and fed to pin 6 of V485 through R435, the Cutoff Adjustment. The cutoff voltage is set at the point (-70 volts) that the raster just disappears.

DYNAMIC FOCUS

The output of the Dynamic Focus stage (shown on diagram 1) is fed to V485 pin 9 through T410 and the half-wave rectifier incorporated in U432.

BLANKING AMPLIFIER

The vertical and horizontal retrace blanking signal (from J300 pin 6) and external TTL blanking from J465 (either 0 volts or 5 volts, depending on strap location), provide the required signal inputs to U470A. When the monitor is on, blanking information from R397 on diagram 3 is coupled to the cathode through U470A, Q475, and Q480. When power is removed, the +15 volts on VR467 collapses, removing the input requirements of U470A. The output of U470A goes high, turning Q475 and Q480 off, thus removing cathode drive. The charge on C477 in the collector of Q480 maintains 100 volts on the collector, to assure the cathode remains off while the supplies are collapsing.

LOW VOLTAGE POWER SUPPLY 5

The Low Voltage Power Supply provides the operating power for the Monitor. Individual integrated regulators are used to provide stable, low-ripple, output voltages for +15V, +5 V and -15 V dc supplies. A schematic diagram of the Low Voltage Power Supply is shown on diagram 5. A detailed block diagram, showing each major stage of this circuit, is superimposed on the schematic with shaded lines. The stage names (given as sub-headings in the following discussion) can be found in the shaded blocks on diagram 5.

POWER INPUT

Power is applied to the primary of transformer T530 through fuse F511, thermal cutoff S512, power switch S515, and Line-Voltage Selector plugs P520 or P521. The Line-Voltage Selector plugs allow changing the primary winding taps of T530 to meet different line-voltage and regulating range requirements. Thermal cutoff S512 provides thermal protection. If the internal temperature of the instrument exceeds a safe operating level, S512 automatically opens to interrupt the applied power. When the temperature returns to a safe level, S512 automatically closes to reapply the power.

POWER OUTPUT

Full-wave bridge rectifiers CR531 and CR561, connected to the secondary of T530, provide the Low Voltage requirements for the 634 Monitor. The +15 volt, +5 volt and -15 volt supplies use integrated regulators (U533, U563, U564). The +20 volt supply is unregulated. Capacitors C532-C536, C562-C566, C542 and C546 are filter components for the low voltage supplies.

INTERCONNECT WIRING 6

The Interconnect Wiring diagram shows the five interboard connectors and the source and destination (schematic number) of all signals and voltages applied to each pin.

VIDEO REVERSAL (OPTION 13) 7

The Video Reversal circuit: (1) switches the polarity of the voltage supplied to the CONTRAST control to change the image on the crt from positive (normal) to negative (reverse), and (2) provides an adjustable current source to bring the resultant image to midscreen.

A schematic diagram of the Video Reversal circuit is shown on diagram 7. A detailed block diagram, showing the major stages of this circuit, are superimposed on the schematic with shaded lines. The stage names (given as sub-headings in the following discussion) can be found in the shaded blocks on diagram 7.

CONTRAST CONTROL

The output of U705A is determined by the position of S705 (Reverse/Normal) and by the remote video reverse input. (See Table 4-1). The input to pin 1 of U705A is high if Option 16 (remote control) is not available.

Switching transistors Q710, Q711, Q730, and Q731 are driven by the high or low output of U705A such that the clockwise end of R735 (CONTRAST) is either +15 volts (normal video) or -15 volts (reverse video).

TABLE 4-1

U705A Truth Table

Video Reverse Input	S705	V705A Pin 3	Video
High	Normal	Low	Normal
High	Reverse	High	Reversed
Low	Normal	High	Reversed
Low	Reverse	Low	Normal

LEVEL SHIFTER

The video waveform swings + (normal) or - (reverse) from the back porch reference level. See Figure 4-2. The Brightness Offset, R715, is necessary to return the video signal to the normal brightness when the video is reversed. During video reversal, Q710 is saturated, essentially grounding the clockwise end of R715 (Brightness Offset). Variable resistor R715, in conjunction with Q719, functions as an adjustable current source to supply the additional current requirements of the brightness control circuitry on diagram 1. During normal operation Q710 and Q719 are cut off and have no effect on brightness.

LOW VOLTAGE POWER SUPPLY (OPTION 20) 8

The Low Voltage Power Supply (Option 20) provides a means of connecting the monitor to an external ac power source. All the rear panel BNC connectors are moved to the Power Supply Board (A7). A provision to bypass each regulator with a strap is also provided. A schematic diagram of the Low-Voltage Power Supply (Option 20) is shown on diagram 8. A detailed block diagram, showing each major stage of this circuit, is superimposed on the schematic with wide shaded lines. The stage names (given as sub-headings in the following discussion) can be found in the shaded blocks on diagram 8.

POWER INPUT

Remote power is coupled to the instrument through a 6-pin connector (P601) mounted on the rear panel of the Option 20 instrument.

+5 V REGULATOR

Unregulated +9 V from the Power Input is applied to the +5 V Reg through F662 and filtered by C666 before being coupled to the interface board through P500 pin 1.

+15 V REGULATOR

Unregulated +23 V from the Power Input is applied to the interface board and to the +15 V Reg through F632. The +15 V from the regulator is filtered by C636 and fed to the interface board through P500 pin 2.

-15 V REGULATOR

Unregulated -22 V from the Power Input is applied to the interface board and to the -15 V Reg through F642. The -15 V from the regulator is filtered by C646 and fed to the interface board through P500 pin 4.

VIDEO INPUT

Video information to be displayed is coupled to the interface board through L602 and P102. The 75 ohm termination switch (S602) is provided to properly terminate the input when no monitor is connected to J602.

EXTERNAL SYNC INPUT (OPTION 11)

The External Sync Input (J607) connects the external sync signal to the Sync Stripper on diagram 2.

TTL BLANKING INPUT

The TTL Blanking Input (J665) connects the external blanking voltage to the Blanking Amplifier on diagram 4.

REMOTE PROGRAMMING (OPTION 16) 9

The Remote Programming diagram shows the electrical connections between J800 and both the front panel and interface boards.

The multi-pin connector (J800) provides for remote control of the BRIGHTNESS, CONTRAST, and FOCUS controls; a video reverse switch (Option 13 only), and remote inputs for the video, external sync (Option 11 only), and TTL Blanking signals.

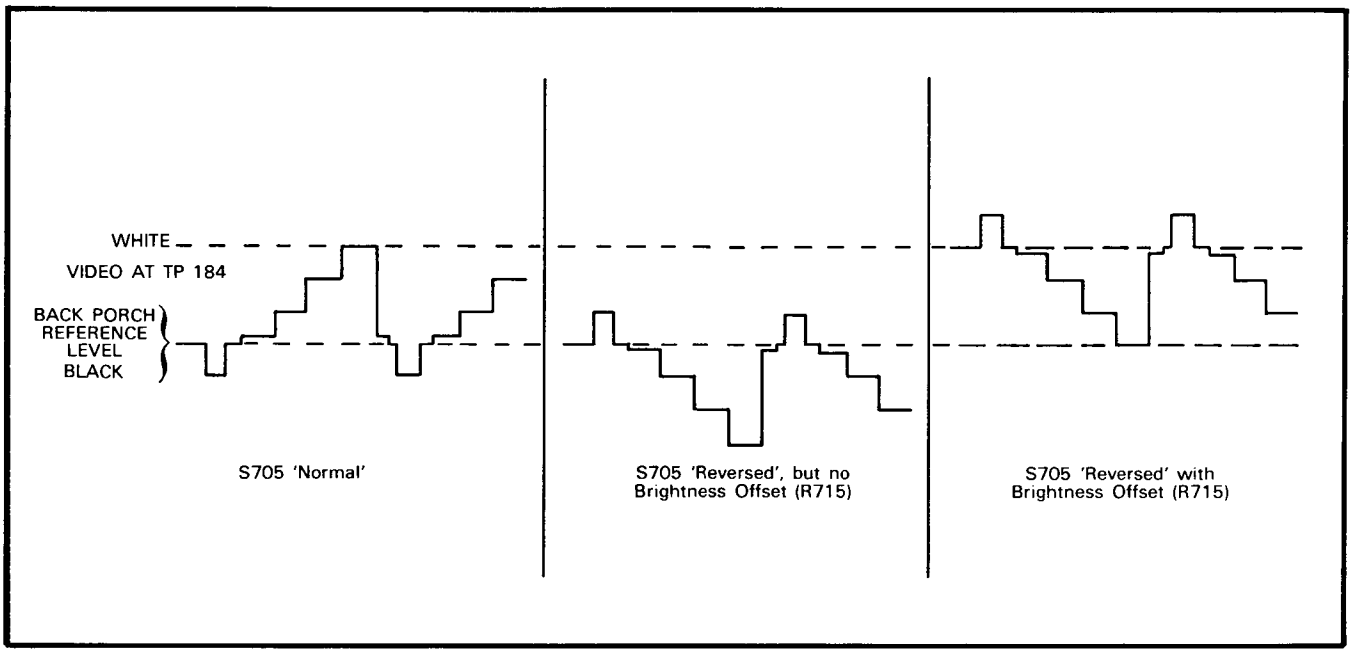

Figure 4-2. Typical video waveform relationships with S705 set in the Normal and Reverse positions.

MAINTENANCE

This section of the manual contains information for performing preventive maintenance, troubleshooting, and corrective maintenance for the 634 Monitor.

PREVENTIVE MAINTENANCE

Preventive maintenance, when performed on a regular basis, can prevent or forestall instrument breakdown and may improve the reliability of the instrument. The severity of the environment to which the instrument is subjected will determine the frequency of maintenance. A convenient time to perform preventive maintenance is preceding electrical adjustment of the instrument.

CLEANING

The 634 Monitor should be cleaned as often as operating conditions require. Accumulation of dirt in the instrument can cause overheating and component breakdown. Dust on components acts as an insulating blanket which prevents efficient heat dissipation, and also provides an electrical conduction path which may result in instrument failure. Cabinet panels will provide some protection against dust in the interior of the instrument.

CAUTION

Avoid the use of chemical cleaning agents which might damage the plastics used in this instrument. Use a non-residue type of cleaner, preferably isopropyl alcohol, total denatured ethyl alcohol, or TP35. Before using any other type of cleaner, consult your Tektronix Service Center.

EXTERIOR

Loose dust accumulated on the outside of the instrument can be removed with a soft cloth or small brush. The brush is particularly useful for dislodging dirt on and around the front-panel controls. Dirt which remains can be removed with a soft cloth dampened in a mild detergent and water solution. Abrasive cleaners should not be used.

CRT

Clean the crt faceplate with a soft, lint-free cloth dampened with denatured alcohol.

INTERIOR

Cleaning the interior of the instrument should only be occasionally necessary. The best way to clean the interior is to blow off the accumulated dust with dry, low-velocity air (approximately 5 lb/in^2). Remove any dirt which remains with a soft brush or a cloth dampened with a mild detergent and water solution. A cotton-tipped applicator is useful for cleaning in narrow spaces, or for cleaning more delicate circuit components.

CAUTION

Circuit boards and components must be dry before applying power to the instrument to prevent damage from electrical arcing.

The high-voltage circuits should receive special attention. Excessive dust in this area may cause high-voltage arcing and result in improper instrument operation.

VISUAL INSPECTION

The 634 Monitor should be inspected occasionally for such defects as broken connections, improperly seated semiconductors, damaged circuit boards, and heat-damaged parts. The corrective procedure for most visible defects is obvious; however, particular care must be taken if heat-damaged parts are found. Overheating usually indicates other trouble in the instrument; therefore, the cause of overheating must be corrected to prevent recurrence of the damage.

SEMICONDUCTOR CHECKS

Periodic checks of semiconductors are not recommended. The best check of semiconductor performance is actual operation in the instrument. More details on semiconductors are given under Troubleshooting later in this section.

PERIODIC ELECTRICAL ADJUSTMENT

To ensure accurate measurements, check the electrial adjustment of this instrument after each 1000 hours of operation, or every six months if used infrequently. In addition, replacement of components may necessitate adjustment of the affected circuits. Complete adjustment instructions are given in Section 6, Performance Check and Calibration. This procedure can be helpful in localizing certain troubles in the instrument, and in some cases, may correct them.

TROUBLESHOOTING

The following information is provided to facilitate troubleshooting of the 634 Monitor. Information contained in other sections of this manual should be used in conjunction with the following data to aid in locating a defective component. An understanding of the circuit operation is helpful in locating troubles. See Section 4, Theory of Operation, for this information.

TROUBLESHOOTING AIDS

DIAGRAMS

Complete schematic diagrams are given on the foldout pages in Section 9, Diagrams and Circuit Board Illustrations. The component number and electrical value of each component in this instrument are shown on these diagrams. (See the first page of the Diagrams and Circuit Board Illustrations section for definitions of the reference designators and symbols used to identify components in this instrument.) Important voltages and numbered waveform test points are also shown on the diagrams. Important waveforms, and the numbered test points where they were obtained, are located adjacent to each diagram. The portions of circuits mounted on circuit boards are enclosed with heavy solid black lines. Each schematic diagram is divided into functional stage blocks, as indicated by the wide shaded lines. These functional blocks are described in detail in Section 4, Theory of Operation.

CIRCUIT BOARD ILLUSTRATIONS

To aid in locating circuit boards, a circuit board location illustration appears on the back of the foldout page facing the schematic diagram. In addition, an illustration of the circuit board is included here, with the physical location of the components and waveform test points that appear on the schematic diagram identified. Each circuit board illustration is arranged in a grid locator with an index to facilitate rapid location of components contained in the schematic diagrams.

TROUBLESHOOTING CHART

A troubleshooting chart is given in Section 9, Diagrams and Circuit Board Illustrations, to aid in locating a defective circuit. The diamonds on the Troubleshooting Chart indicate display problems and the blocks indicate a check and/or adjustment. The circuits are discussed in detail in Section 4, Theory of Operation.

TEST POINT AND ADJUSTMENT LOCATIONS

To aid in locating test points and adjustable components called out in the Performance Check and Calibration procedures, a "Test Point and Adjustment Locations" foldout page is provided in Section 9, Diagrams and Circuit Board Illustrations.

COMPONENT COLOR CODING

This instrument contains brown composition resistors, some metal-film resistors and some wire-wound resistors. The resistance values of wire-wound resistors are usually printed on the component body. The resistance values of composition resistors and metal-film resistors are color coded on the components using the EIA color code (some metal-film resistors may have the value printed on the body). The color code is read starting with the stripe nearest the end of the resistor. Composition resistors have four stripes, which consist of two significant figures, a multiplier, and a tolerance value (see Fig. 5-1). Metal film resistors have five stripes consisting of three significant figures, a multiplier, and a tolerance value.

The values of common disc capacitors and small electrolytics are marked on the side of the component body. The white ceramic and epoxy-coated tantalum capacitors used in the instrument are color coded using a

(1862-74) 2561-8

COLOR CODE

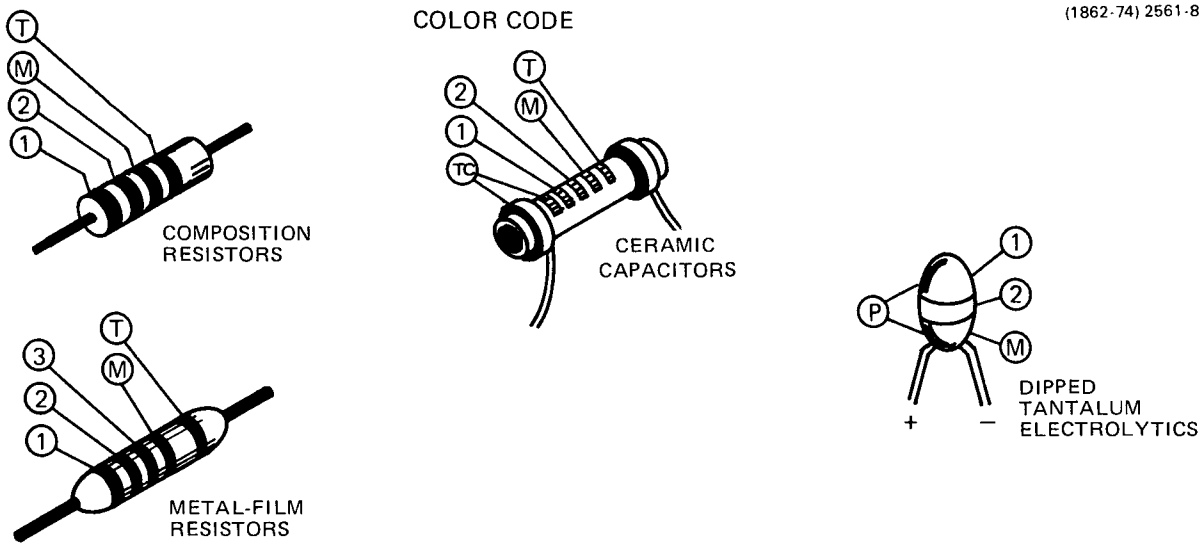

(1) (2) and (3) - 1ST, 2ND, AND 3RD SIGNIFICANT FIGS.
(M) - MULTIPLIER (T) - TOLERANCE;
(TC) - TEMPERATURE COEFFICIENT.

(T) AND/OR (TC) COLOR CODE MAY NOT BE PRESENT ON SOME CAPACITORS;
(P) - POLARITY AND VOLTAGE RATING

COLOR	SIGNIFICANT FIGURES	RESISTORS		CAPACITORS			DIPPED TANTALUM VOLTAGE RATING
		MULTIPLIER (OHMS)	TOLERANCE	MULTIPLIER (pF)	TOLERANCE		
					OVER 10pF	UNDER 10pF	
BLACK	0	1	---	1	±20%	± 2pF	4VDC
BROWN	1	10	±1%	10	±1%	±0.1pF	6VDC
RED	2	10^2 or 100	±2%	10^2 or 100	±2%	---	10VDC
ORANGE	3	10^3 or 1 K	±3%	10^3 or 1000	±3%	---	15VDC
YELLOW	4	10^4 or 10K	±4%	10^4 or 10,000	+100% –0%	---	20VDC
GREEN	5	10^5 or 100 K	±1/2%	10^5 or 100,000	±5%	±0.5pF	25VDC
BLUE	6	10^6 or 1 M	±1/4%	10^6 or 1,000,000	---	---	35VDC
VIOLET	7	---	±1/10%	10^7 or 10,000,000	---	---	50VDC
GRAY	8	---	---	10^{-2} or 0.01	+80% –20%	±0.25pF	---
WHITE	9	---	---	10^{-1} or 0.1	±10%	±1pF	3VDC
GOLD	---	10^{-1} or 0.1	±5%	---	---	---	---
SILVER	---	10^{-2} or 0.01	±10%	---	---	---	---
NONE	---	---	±20%	---	±10%	±1pF	---

Figure 5-1. Color code for resistors and capacitors.

modified EIA code (see Fig. 5-1). Axial capacitors either have the value printed on the body or use the modified EIA code.

The cathode end of glass-encased diodes is indicated by a stripe, a series of stripes, or a dot. The cathode and anode ends of metal-encased diodes can be identified by the diode symbol marked on the body.

SEMICONDUCTOR LEAD CONFIGURATIONS

Figure 5-2 shows the lead configurations of semiconductors used in the 634 Monitor.

MULTI-CONNECTOR HOLDERS

The multi-connector holders are keyed with two triangles, one on the holder and one on the circuit board. When a connection is made perpendicular to a circuit board surface, the orientation of the triangle on the end-lead multi-pin connector holder is determined by the placement of the multi-pin connector index (see Fig. 5-3).

TROUBLESHOOTING EQUIPMENT

The following equipment, in addition to that listed in the Performance Check and Adjustment section, is useful for troubleshooting the 634 Monitor:

Semiconductor Tester

Description: Dynamic-type tester.

Purpose: To test the semiconductors used in this instrument.

Recommended Type: TEKTRONIX Type 576 or equivalent.

Multimeter

Description: Ten megohm input impedance and 0 to 300 volts range, ac and dc; ohmmeter, 0 to 50 megohms; Accuracy, within 3%. Test probes must be insulated to prevent accidental shorting.

Test Oscilloscope

Description: Frequency response, dc to twenty-five megahertz minimum; deflection factor, one millivolt/division to five volts/division. A 10X, ten megohm voltage probe should be used to reduce circuit loading for voltage measurements.

Purpose: To check operating waveforms.

TROUBLESHOOTING TECHNIQUES

This troubleshooting procedure is arranged in an order that checks the simple trouble possibilities before proceeding with extensive troubleshooting. The first few checks assure proper connection, operation, and adjustment. If the trouble is located by these checks, the remaining steps aid in locating the defective component. When the defective component is located, replace it using the replacement procedure given under Component Replacement in this section.

1. CHECK CONTROL SETTINGS

Incorrect control settings can indicate a trouble that does not exist. If there is any question about the correct function or operation of any control on the 634, refer to Section 2, Operating Instructions.

2. CHECK ASSOCIATED EQUIPMENT

Before proceeding with troubleshooting, check that the equipment used with this instrument is operating correctly. Also, check that the input signals are properly connected and that the interconnecting cables are not defective. Check the power source voltage.

WARNING

Although this Monitor is not to be connected to a patient, interconnecting this Monitor to other equipment can result in the application of excessive current to a patient. It is extremely important that the interconnection is made in accordance with NFPA 76B-T, Tentative Standard for the Safe Use of Electricity in Patient Care Areas of Health Care Facilities, section 3038, "Signal Transmission Between Appliances".

3. VISUAL CHECK

Visually check that portion of the instrument in which the trouble is located. Many troubles can be found by visible indications, such as unsoldered connections, broken wires, damaged circuit boards and damaged components.

4. CHECK INSTRUMENT ADJUSTMENT

Check the electrical adjustment of this instrument, or of the affected circuit if the trouble appears in one circuit. The apparent trouble may only be a result of misadjustment. Complete adjustment instructions are given in Section 6, Calibration.

5. ISOLATE TROUBLE TO A CIRCUIT

To isolate trouble to a particular circuit, note the trouble symptom. The symptom often identifies the circuit in which the trouble is located. When trouble symptoms appear in more than one circuit, check the affected circuits by taking voltage and waveform readings.

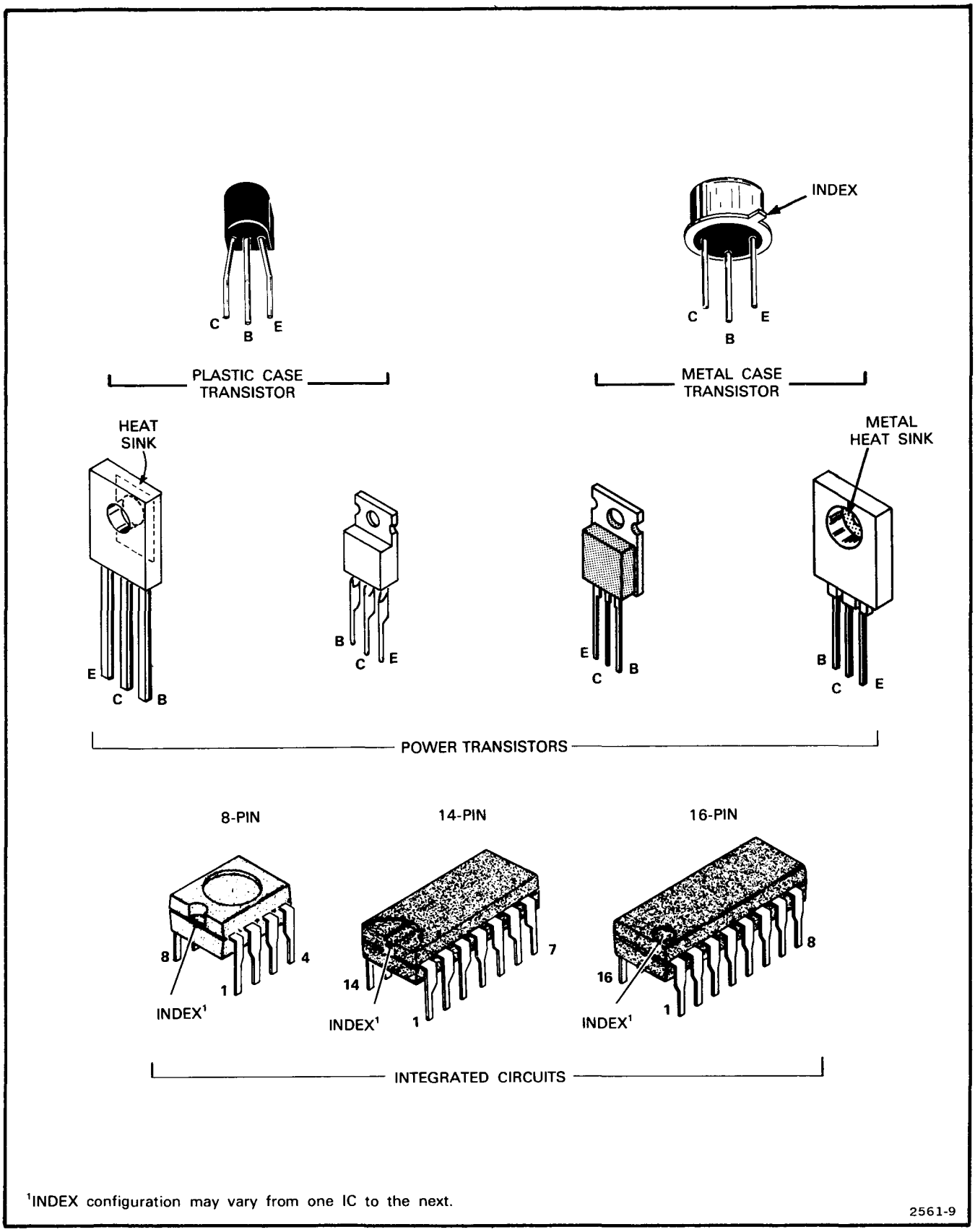

Figure 5-2. Semiconductor lead configurations.

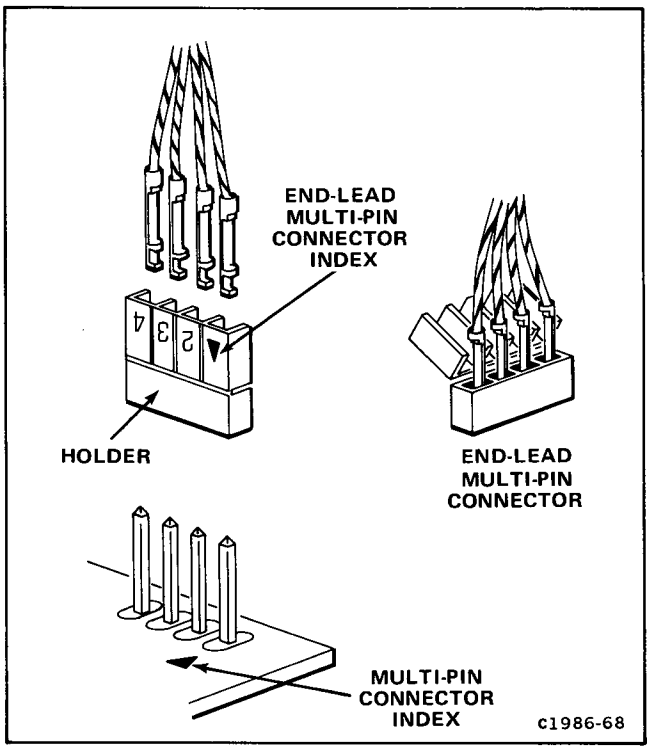

Figure 5-3. Orientation of multi-connector holders.

Incorrect operation of all circuits often indicates trouble in the power supplies. Check first for the correct output voltage of the individual supplies. Refer to Specifications, Table 1-1 in section 1. A defective component elsewhere in the instrument can appear as a power-supply trouble and may also affect the operation of other circuits. These voltages are measured between the power-supply test points and ground (see the Test Point and Adjustment Locations foldout page in Section 9, Diagrams and Circuit Board Illustrations, for test point locations). If the power-supply voltage is within the listed range, the supply can be assumed to be working correctly.

Figure 9-11 in Section 9, Diagrams and Circuit Board Illustrations, provides a guide for locating a defective circuit. Begin at START in the upper left hand corner and perform any instrument performance checks necessary to answer the question in the box or diamond. Then proceed in the direction that your answer indicates (Yes - across, No - down) until all checks have been performed. The numbered diamond in the box refers to the schematic that the particular circuit may be found. After the defective circuit has been located, proceed with steps 6 and 7 of Troubleshooting Techniques to isolate the defective component.

6. CHECK VOLTAGES AND WAVEFORMS

Often the defective component can be located by checking for the correct voltages or waveforms in the circuit. Typical voltages and waveforms are given in Section 9, Diagrams and Circuit Board Illustrations.

NOTE

Voltages and waveforms given in Section 9, Diagrams and Circuit Board Illustrations, are not absolute and may vary slightly between 634 Monitors. To obtain operating conditions similar to those used to make these readings, see the appropriate schematic.

7. CHECK INDIVIDUAL COMPONENTS

The following procedures describe methods of checking individual components in the 634 Monitor. Components which are soldered in place are best checked by first disconnecting one end. This isolates the measurement from the effects of surrounding circuitry.

WARNING

To avoid electric shock, always disconnect the Monitor from the power source before removing components.

Fuses

Check for open fuses by checking the continuity with an ohmmeter. The location and rating of power-supply fuses is shown in the Installation section, Figure 3-1 for the standard instrument, or Figure 3-3 for the option 20 instrument.

Transistors

A good check of transistor operation is actual performance under operating conditions. A transistor can most effectively be checked by substituting a new component for it (or one which has been checked previously). However, be sure that circuit conditions are not such that a replacement transistor might also be damaged. If substitute transistors are not available, use a dynamic tester. Static-type testers are not recommended, since they do not check operation under simulated operating conditions.

Integrated Circuits

Integrated circuits can be checked with a voltmeter, test oscilloscope, or by direct substitution. A good understanding of the circuit operation is essential when troubleshooting circuits using integrated circuits. In addition, operating waveforms, logic levels, and other operating information for the integrated circuits are given in Section 4, Theory of Operation, and Section 9, Diagrams and Circuit Board Illustrations. Use care when checking voltages and waveforms around the integrated

circuits so that adjacent leads are not shorted together. A convenient means of clipping a test probe to the in-line multi-pin integrated circuits is with an integrated-circuit test clip. This device also doubles as an integrated-circuit extraction tool.

Diodes

A diode can be checked for an open or shorted condition by measuring the resistance between terminals with an ohmmeter scale having a low internal source current, such as the R X 1K scale. The resistance should be very high in one direction and very low when the meter leads are reversed.

CAUTION

When checking diodes, do not use an ohmmeter scale that has a high internal current, since high currents may damage the diodes under test.

Resistors

Check the resistors with an ohmmeter. Resistor tolerance is given in Section 8, Replaceable Electrical Parts. Normally, resistors do not need to be replaced unless the measured value varies widely from the specified value.

Capacitors

A leaky or shorted capacitor can best be detected by checking resistance with an ohmmeter on the highest scale. Do not exceed the voltage rating of the capacitor. The resistance reading should be high after initial charge of the capacitor. An open capacitor can best be detected with a capacitance meter or by checking if the capacitor passes ac signals.

8. REPAIR AND READJUST THE CIRCUIT

If any defective parts are located, follow the replacement procedures given under Component Replacement in this section. Check the performance of any circuit that has been repaired or that has had any electrical components replaced. Adjustment of the circuit may be necessary.

CORRECTIVE MAINTENANCE

Corrective maintenance consists of component replacement and instrument repair. Special techniques required to replace components in the 634 Monitor are given here.

OBTAINING REPLACEMENT PARTS

STANDARD PARTS

Most electrical and mechanical parts can be obtained through your local Tektronix field office or representative. However, you should be able to obtain many of the standard electronic components from a local commercial source in your area. Before you purchase or order a part from a source other than Tektronix Inc., please check the electrical parts list for the proper value, rating, tolerance and description.

NOTE

When selecting replacement parts, remember that the physical size and shape of a component may affect its performance in the instrument. All replacement parts should be direct replacements unless you know that a different component will not adversly affect instrument performance.

SPECIAL PARTS

Some components of the 634 are manufactured or selected by Tektronix, Inc. to meet specific performance requirements. Most of the mechanical parts used in this instrument have been manufactured by Tektronix, Inc. Order all special parts directly from your local Tektronix Field Office or representative.

ORDERING PARTS

When ordering replacement parts from Tektronix, Inc., include the following information:

1. Instrument type.
2. Instrument serial number.
3. A description of the part (if electrical, include the circuit number).
4. Tektronix part number.

SOLDERING TECHNIQUES

WARNING

To avoid electric shock, disconnect the Monitor from the power source before soldering.

The reliability and accuracy of this instrument can be maintained only if proper soldering techniques are used when repairing or replacing parts. General soldering techniques which apply to maintenance of any precision electronic equipment should be used when working on this instrument. Use only 60/40 resin-core, electric-grade solder. The choice of soldering iron is determined by the repair to be made. When soldering on circuit boards or small wiring, use only a 15-watt, pencil-type soldering iron. A higher wattage soldering iron can cause the etched circuit wiring to separate from the board base material and melt the insulation from small wiring. Always keep the soldering-iron tip properly tinned to ensure the best heat transfer to the solder joint. Apply only enough heat to remove the component or to make a good solder joint. To protect heat-sensitive components, hold the component lead with a pair of long-nose pliers between the component body and the solder joint. Use a solder-removing wick to remove excess solder from connections or to clean circuit board pads.

The following technique should be used to replace a component on any of the circuit boards in this instrument. Most components can be replaced without removing the board(s) from the instrument.

1. Touch the soldering iron to the lead at the solder connection. Never place the iron directly on the board, as this may damage the board.

2. Melt a small amount of solder onto the component lead connection. This replaces the flux, which may have been removed during instrument cleaning, and facilitates removal of the component.

3. Grip the component lead with a pair of long-nose pliers. When the solder begins to flow, gently pull the component lead from the board. If unable to separate the lead from the board, try removing the other end of the component.

NOTE

Some components are difficult to remove from the circuit board due to a bend placed in each lead during machine insertion of the component. The purpose of the bent leads is to hold the component in position during a flow-solder manufacturing process which solders all components at once. To make removal of machine inserted components easier, straighten the leads of the component on the back of the circuit board using a small screwdriver or pliers, while heating the soldered connection.

4. Bend the leads of the replacement component to fit the holes in the circuit board. If the component is replaced while the board is mounted in the instrument, cut the leads so they will just protrude through the board. Insert the leads into the holes in the board so that the component is firmly seated against the board, or as originally positioned.

5. Touch the iron to the connection and apply enough solder to make a firm solder joint.

6. Cut off any excess lead protruding through the board (if not clipped in step 4).

7. Clean the area around the solder connection with a flux-removing solvent. Be careful not to remove information printed on the circuit board.

COMPONENT REMOVAL AND REPLACEMENT

WARNING

To avoid electric shock, always disconnect the Monitor from the power source before replacing components.

The exploded-view drawings associated with the Replaceable Mechanical Parts list (located at the rear of this manual) may be helpful in the removal or disassembly of individual components or sub-assemblies.

CATHODE-RAY TUBE REMOVAL

Remove the cathode-ray tube (crt) as follows (see Fig. 5-4):

WARNING

Use care when handling a crt. Breakage of the crt causes a high-velocity scattering of glass fragments (implosion). Protective clothing and safety glasses should be worn. Avoid striking the crt on any object which might cause it to crack or implode. When storing a crt, place it in a protective carton or set it face down in a protected location on a smooth surface with a soft mat under the faceplate.

1. Remove the protective cabinet panels to gain access to the crt leads.

2. Disconnect the anode lead from the High Voltage Multiplier.

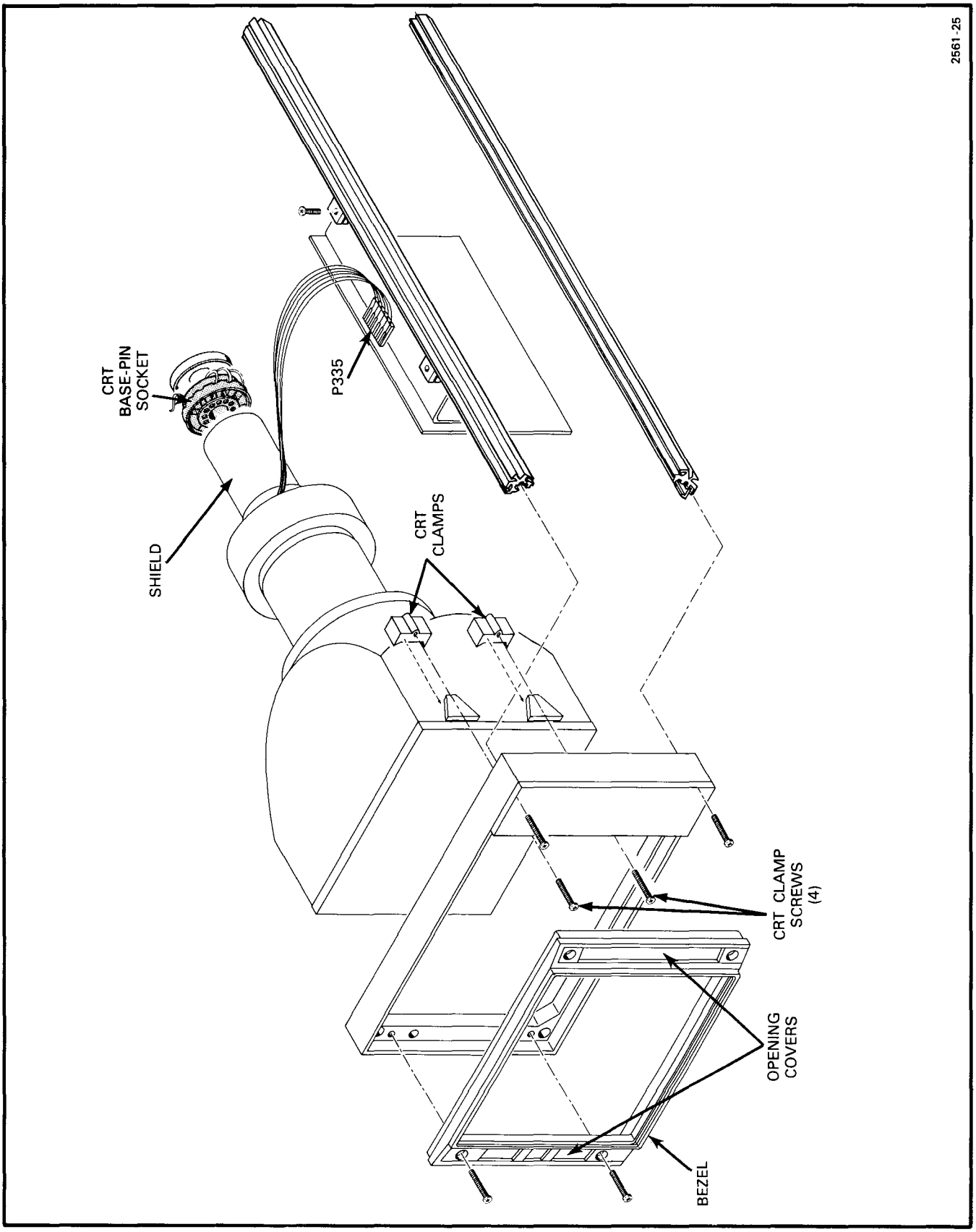

Figure 5-4. Crt removal and replacement.

WARNING

To avoid electrical shock, always ground the anode lead to the chassis to dissipate any stored charge in the crt.

3. Disconnect the harmonica connector (P335).

4. Remove the opening covers to gain access to the bezel and crt clamp screws.

5. Remove the bezel and loosen the crt clamp screws.

6. With one hand on the front of the instrument, gently push on the rear of the crt to slide the crt forward.

7. Remove the crt base-pin socket.

8. Gently pull the crt out the front of the instrument while guiding the crt anode plug.

9. Remove the grounding clip from the neck shield.

10. Remove the neck shield.

CATHODE-RAY TUBE REPLACEMENT

Replace the cathode-ray tube as follows (see Figure 5-4):

1. Install the yoke and neck shield on the crt. Install the grounding clip. Push the yoke as far toward the face of the crt as possible, and tighten the mounting clamp screw.

2. Begin to insert the crt into the instrument. Connect the crt socket before the crt is completely inserted.

3. Set the instrument on its rear panel, and allow the ceramic wedges on the side of the crt to rest on the phenolic mounting clamps in the instrument frame.

4. Install the implosion shield and crt retainer casting (bezel). Be sure the mounting screws are well tightened. The mounting clamps must be loosened enough so that the crt is loose after the bezel is tight in its place.

NOTE

It is important that the clear implosion shield (or a material of equivalent compression-versus-force characteristics) be installed between the crt glass faceplate and the retainer casting (bezel). The material acts as a shock absorber, allowing the crt to withstand high shock levels without breakage. The clear implosion shield provided is a polycarbonate plastic material.

5. Carefully support the crt, and tighten the crt clamp screws in an alternating, crosswise pattern, while slightly moving the crt to prevent it from being wedged crookedly in the frame.

6. When the crt face is flat against the implosion shield, tighten the crt clamp screws with the same alternating, crosswise pattern as in the previous step. Tighten the screws to a torque of 8 in.-lbs. (equivalent to .87 N.m, or 92 g.m.).

7. Connect the high-voltage lead to the multiplier on the high-voltage board, and install the plastic retaining clip which holds the high-voltage lead in place. Install the high-voltage protective cover.

8. Connect the yoke wiring to the yoke driver board.

NOTE

After the instrument is operating, the yoke will have to be adjusted for proper rotational alignment. Be sure to push the yoke as far toward the face of the crt as possible. Tighten the mounting clamp screw to 15 in.-lbs. (equivalent to 1.22 N.m, or 173 g.m.).

NOTE

The replacement crt will require that the Monitor be readjusted. Refer to Section 6, Performance Check and Calibation.

CIRCUIT BOARDS

If a circuit board is damaged beyond repair, the entire assembly, including all soldered-on components, can be replaced. Part numbers for the completely wired boards are given in Section 8, Replaceable Electrical Parts.

A1, A1 (OPTION 16), A8 (OPTION 13) FRONT PANEL BOARD

Remove and replace the Front Panel board as follows. See Figure 5-5.

1. Open access door and remove the front panel control knobs.

2. Remove the 2-pin harmonica that supplies the power indicator lamp.

3. Option 16 only, unsolder all connecting wires.

4. Remove one mounting screw that secures the rail clamp to the rail.

5. Pull upon the Front Panel board until the inter-board connector disengages.

6. To replace the board, reverse the order of removal.

A2 OR A10 (OPTION 15) SYNC SEPARATOR BOARD

Remove and replace the Sync Separator board as follows:

1. Loosen the screw and rotate the circuit board retainer aside.

2. Pull the Sync Separator board up with a front-to-back rocking motion.

3. To replace the board, reverse the order of removal.

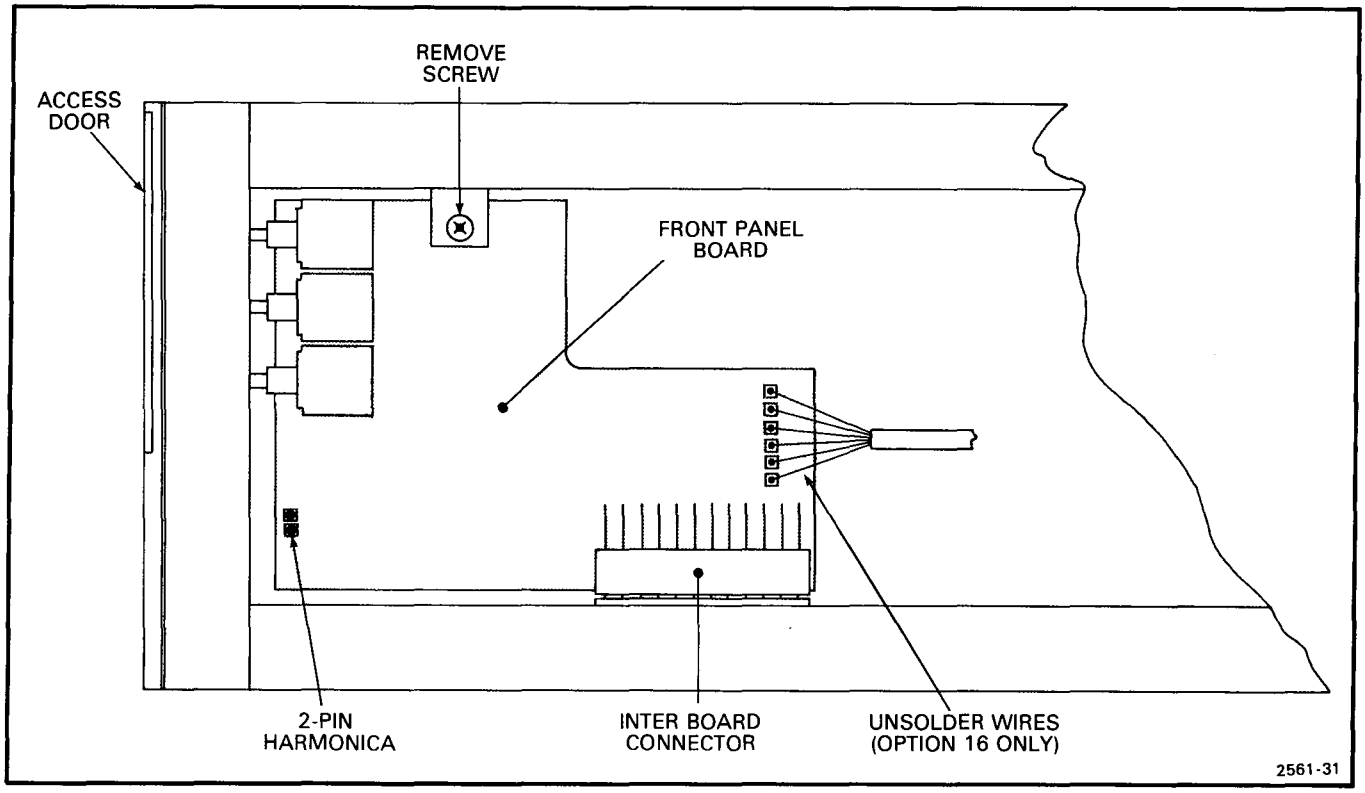

Figure 5-5. Front Panel board removal.

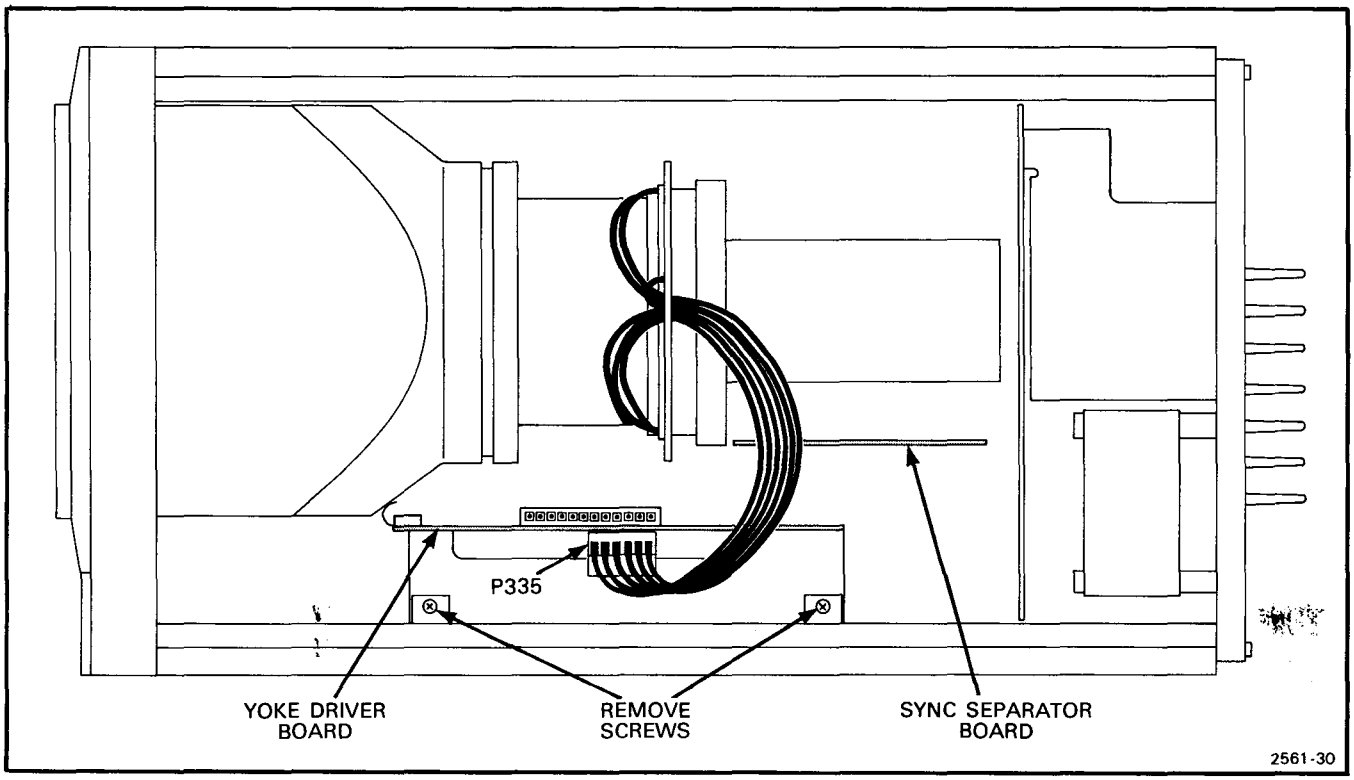

Figure 5-6. Yoke Driver board removal.

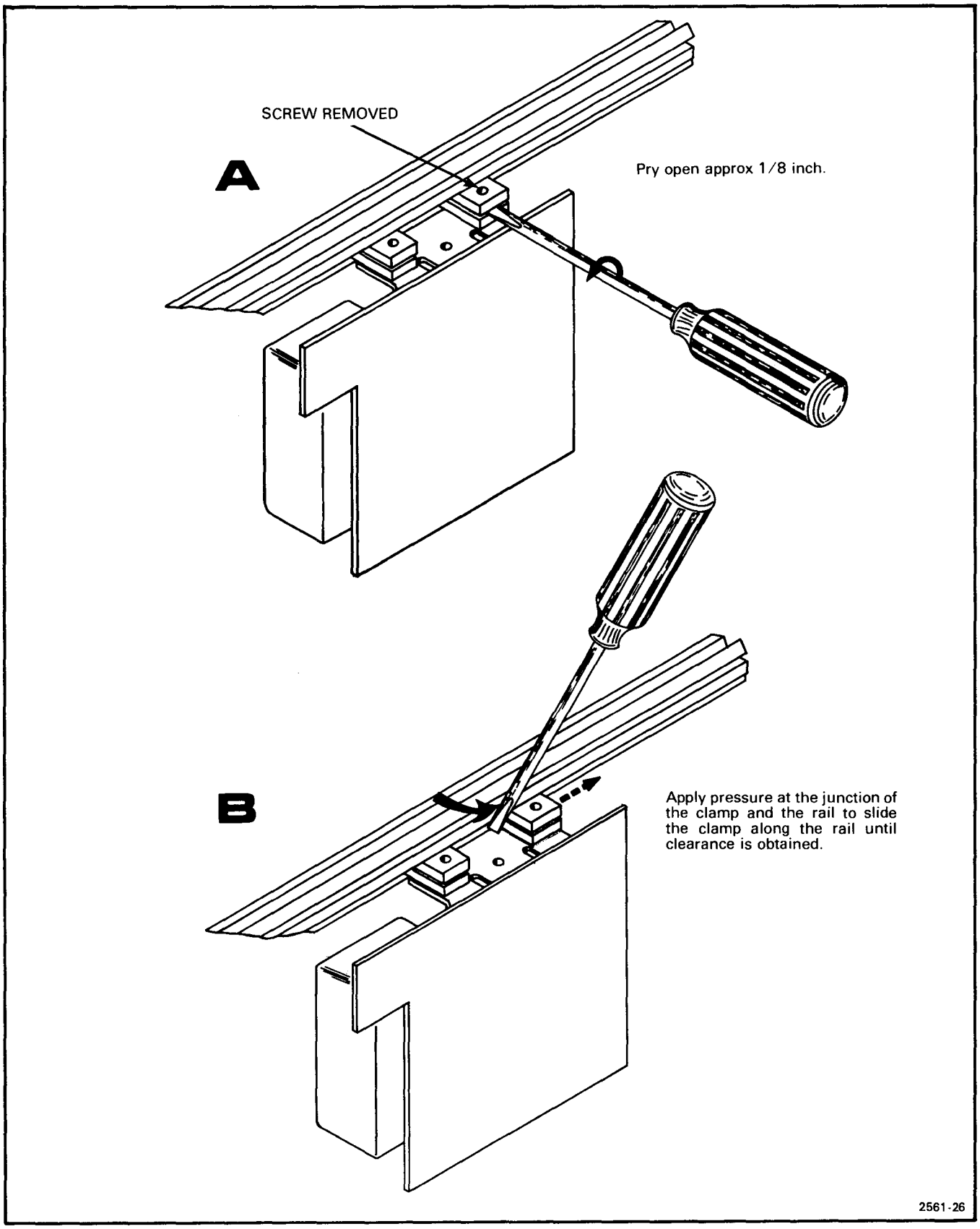

Figure 5-7. High Voltage board removal.

@

A3 OR A11 (OPTION 15) YOKE DRIVE BOARD

Remove and replace the Yoke Driver board as follows (see Fig. 5-6):

1. Remove the two rail clamp screws.

2. Disconnect P335 from the Yoke Driver board.

3. Loosen the crt grounding clip and rotate to one side.

4. Push the board toward the crt until it clears the rail clamps, then pull up with a front-to-back rocking motion.

5. To replace the board, reverse the order of removal.

A4 HIGH VOLTAGE BOARD

Remove and replace the High Voltage board as follows:

NOTE

When disconnecting wires from a circuit board, always tag the wire and the corresponding connection point on the circuit board.

1. Unsolder all wires connected to the back side of the board.

2. Remove the high-voltage shield and unplug both wires.

3. Loosen the screws holding the two clamps to the chassis rails.

4. Pry the clamps open about 1/8 inch and slide clamps to either side with a screwdriver. See Figure 5-7.

5. Push the board toward the crt to clear the rail and pull up with a front-to-back rocking motion.

6. To replace the board, reverse the order of removal.

NOTE

Refer to transformer replacement information at the end of this section.

A5 POWER SUPPLY BOARD

Remove and replace the Power Supply board as follows:

1. Unplug the two harmonica connectors plugged to the bottom of the interface board.

2. Disconnect the extension shaft from the Power switch.

3. Remove the four screws shown in Figure 5-8.

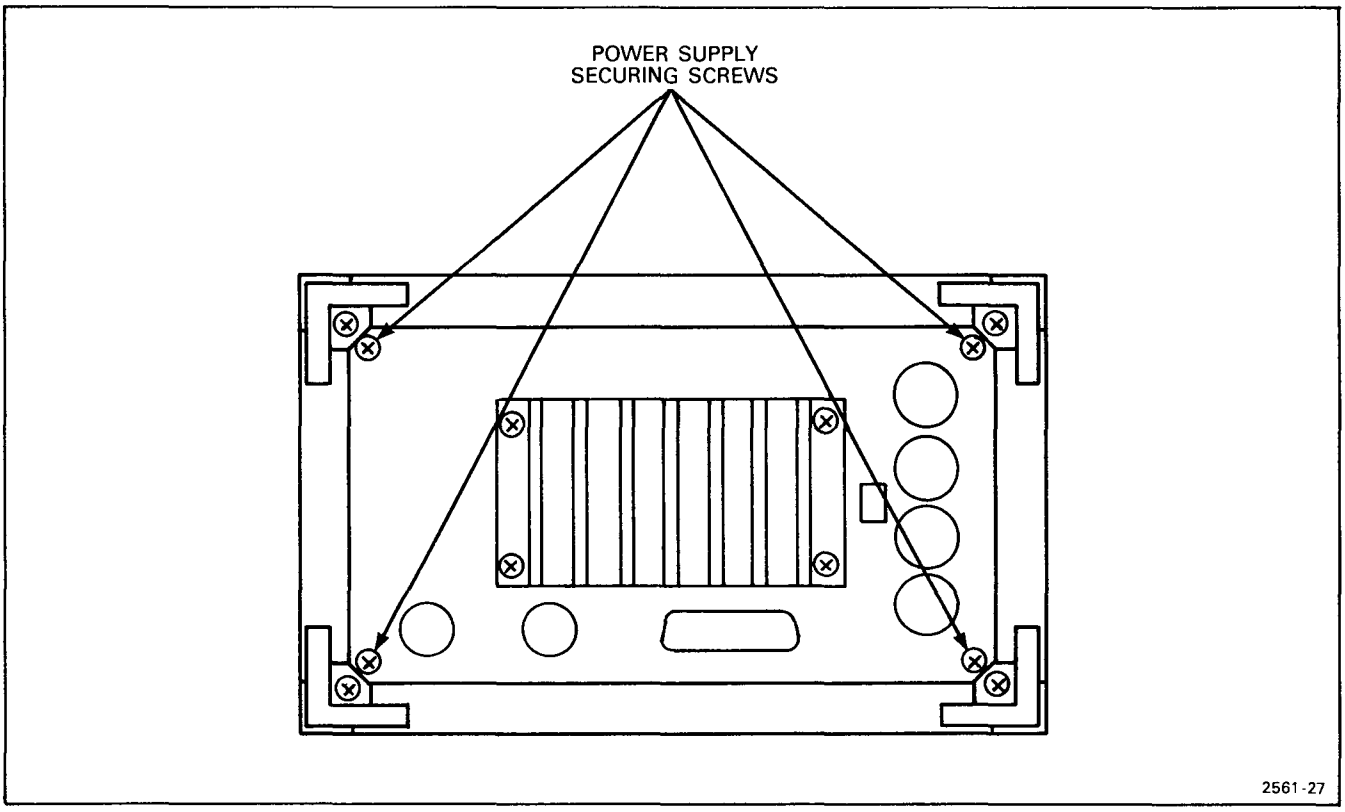

Figure 5-8. Location of securing screws for power supply removal.

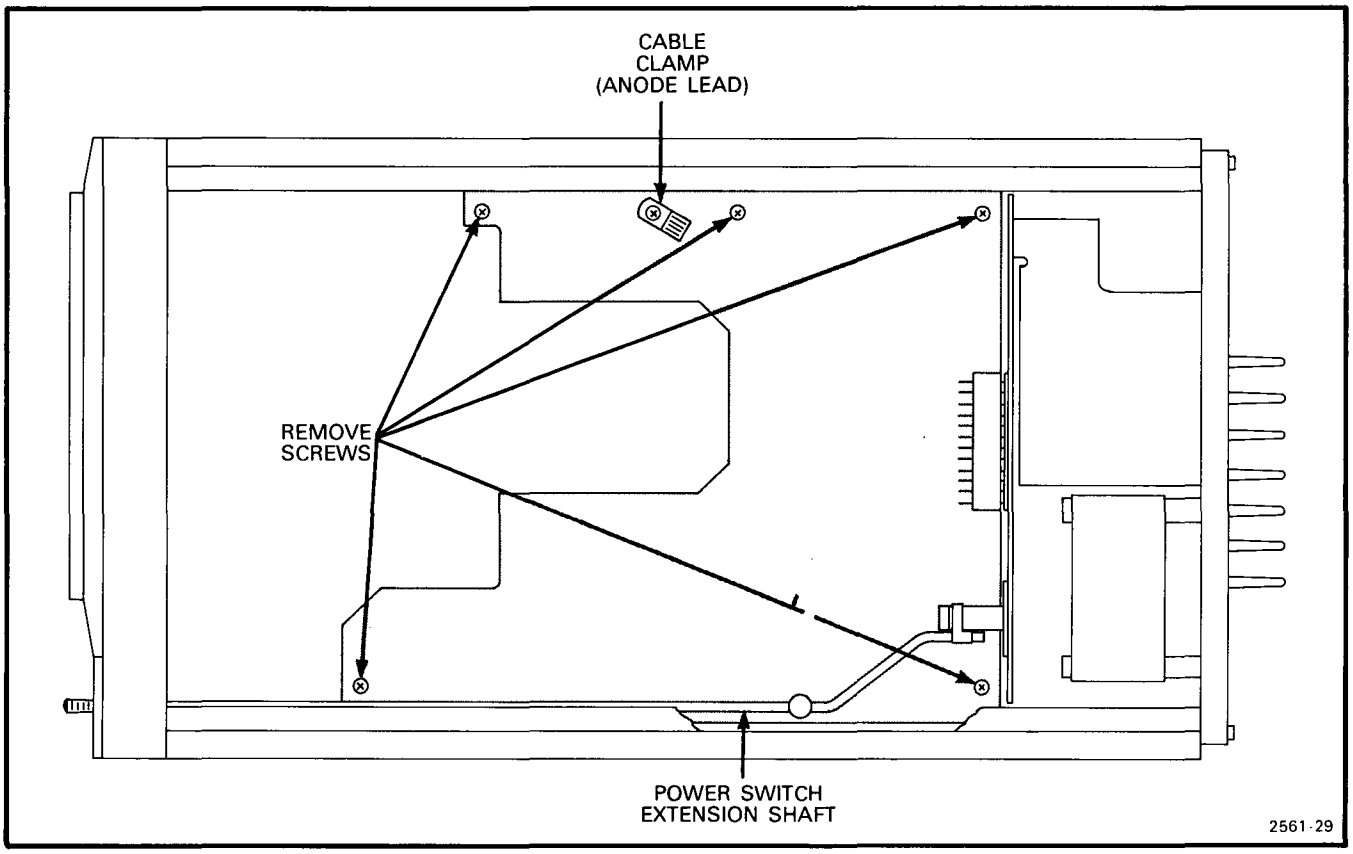

Figure 5-9. Interface board mounting screw locations.

4. Remove the Power Supply as a unit through the rear of the instrument.

5. Reverse this procedure to reassemble.

A6 OR A9 (OPTION 14) INTERFACE BOARD

Remove and replace the Interface board as follows:

1. Remove the Sync Separator, High Voltage, Yoke Driver and Front Panel boards .as described previously.

2. Unplug the harmonicas that connect the Interface board to the Power Supply assembly.

3. Disconnect the extension shaft from the Power switch and pull the shaft forward to clear the nylon guide mounted on the Interface board. See Figure 5-9.

4. Pull the crt anode lead through the plastic cable clamp.

5. Remove the five screws mounting the board to the rail clamps. See Figure 5-9.

6. Pull the board toward the front until the interboard connector disengages, then remove the board.

7. To replace the board, reverse the removal procedure.

SEMICONDUCTORS

Semiconductors should not be replaced unless actually defective. If removed from their sockets during routine maintenance, return them to their original sockets. Unnecessary replacement of semiconductors may affect the adjustment of the instrument. When semiconductors are replaced, check the operation of circuits which may be affected.

WARNING

Always disconnect the Monitor from the power source before replacing components to avoid electrical-shock hazard.

Replacement semiconductors should be of the original type or a direct replacement. Lead configurations of the semiconductors used in this instrument are shown in Figure 5-2. Some plastic case transistors have lead configurations which do not agree with those shown. If a replacement transistor is made by other than the original manufacturer, check the manufacturer's basing diagram for correct basing. All transistor sockets in the 634 are wired for the standard basing as used for metal-cased transistors. When removing soldered-in transistors, use a solder-removing wick to remove the solder from the

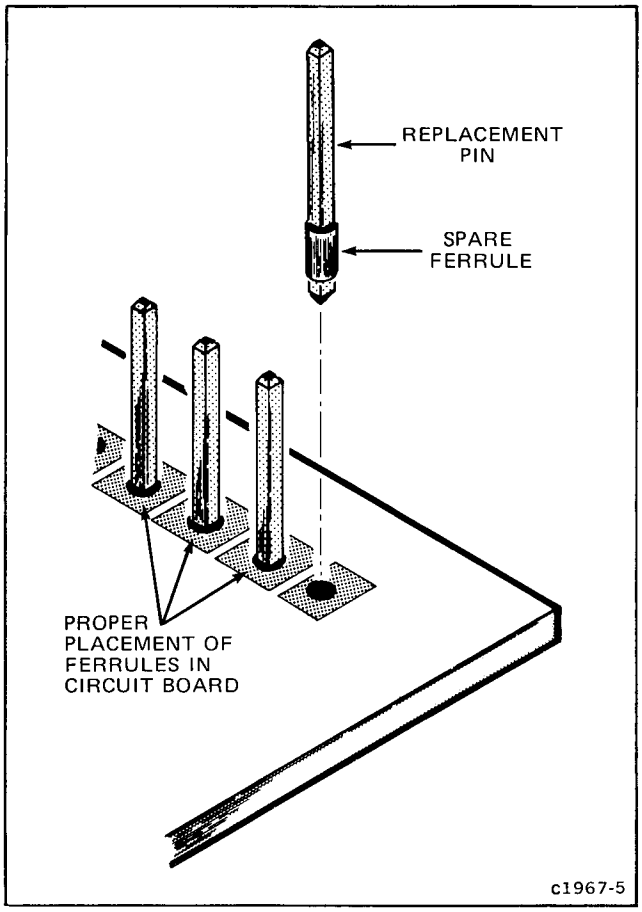

Figure 5-10. Exploded view of circuit-board pin and ferrule.

circuit board pads. Transistors which have heat radiators or are mounted on the chassis use silicone grease to increase heat transfer. Replace the silicone grease on both sides of the insulator plate and on the metal tab, if the transistor has one, when replacing these transistors.

WARNING

Handle silicone grease with care. Avoid getting silicone grease in your eyes. Wash hands thoroughly after use.

CIRCUIT-BOARD PIN REPLACEMENT

A circuit-board pin replacement kit, including necessary tools, instructions, and replacement pins with attached spare ferrules, is available from Tektronix, Inc. Order Tektronix Part 040-0542-00.

To replace a damaged pin, first disconnect any pin connectors. Then unsolder (see Soldering Techniques) the damaged pin and pull it from the board with a pair of pliers, leaving the ferrule (see Fig. 5-10) in the hole if possible. If the ferrule remains in the circuit board, remove the spare ferrule from the replacement pin and press the new pin into the hole in the circuit board. If the ferrule is removed with the damaged pin, clean out the hole using a solder-removing wick and a scribe. Then press the replacement pin, with attached spare ferrule, into the hole. Position the replacement pin in the same manner as the original pin had been. Solder the pin to the circuit board on each side of the circuit board. If the original pin was bent at an angle to mate with a connector, carefully bend the new pin to the same angle. Replace the pin connector.

END-LEAD PIN CONNECTORS

The pin connectors used to connect the wires to the interconnecting pins are clamped to the ends of the associated leads. To remove or replace damaged end-lead pin connectors, remove the old pin connector from the end of the lead and clamp the replacement connector to the lead.

Some of the pin connectors are grouped and mounted in a plastic holder; the overall result is that these connectors are removed and installed as a multi-pin connector (see Troubleshooting Aids). If the individual end-lead pin connectors are removed from the plastic holder, note the order of the individual wires for correct replacement in the holder.

TRANSFORMER REPLACEMENT

When replacing the high voltage transformer (TA10 on A4) in all 634 monitors, use high voltage transformer part no. 120-1195-01. The high voltage board (part no. 670-5593-04) can be replaced with part no. 670-6403-03) can be replaced with part no. 670-6403-05) on 634 and 634LC monitors. The high voltage board (part no. 670-6403-03) can be replaced with part no. 670-6403-04 on 634/15 and 634LC/15 monitors.

CALIBRATION

This section provides information necessary to: (1) Verify that this instrument meets the electrical specifications in Section 1, General Information, (2) verify that all controls function properly, and (3) perform all internal adjustments. The Part I—Performance Check procedure checks the electrical specifications listed in section 1 without making any internal adjustments. The Part II—Adjustment and Performance Check procedure provides a complete sequential check of instrument performance concurrent with a complete sequential adjustment of internal controls. A separate Operators Checkout Procedure, in the Operating Instructions section of this manual, can be used to check only the functions of the front- and rear-panel controls and connectors.

NOTE

If the instrument is repositioned or a new magnetic field source is located in close proximity to the instrument following adjustment, it may require readjustment. This readjustment may be required because:

- *The earth's magnetic field affects the position and rotation of the crt display. If the instrument is positioned such that its electron beam moves parallel to the earth's magnetic lines of force (north-south), display rotation results. If the instrument is positioned such that its electron beam moves perpendicular to the earth's magnetic lines of force (east-west), vertical and/or horizontal displacement results. Instrument positioning at any angle between north-south and east-west causes a combination of display rotation and display displacement. The amount of each varies with the angle.*
- *Similar results can occur from local magnetic fields as well as the earth's magnetic field. Local magnetic fields are produced by electrical machinery, steel structures, etc.*

PRELIMINARY INFORMATION

USING THESE PROCEDURES

Both the Part I-Performance Check and Part II-Adjustment and Performance Check procedures are divided into functional block subsections (e.g., A. Option 20 Power Supply, B. Video Channel, etc.). The order in which the subsections and steps (A1, A2, B1, B2, etc.) appear in each procedure is the recommended sequence for accomplishing a performance check or calibration of the instrument. Subsections within either procedure can be performed independently, as can each step within any subsection. Refer to Partial Procedures for specific instructions on performing either a partial Performance Check or a partial Calibration.

All functional block subsections begin with a list of required test equipment, followed by instructions for **Before You Begin** and the list of Preliminary Control Settings for that subsection (e.g., Power Supply Preliminary Control Settings, CRT Display Preliminary Control Settings, etc.). Each step contains separate Setup Conditions which, if applicable, include the instrument control settings, an illustrated test setup, and test equipment control settings. The instrument and test equipment control settings listed in the step Setup Conditions may include additional settings, changes from the previous step, or changes to the Preliminary Control Settings. This is necessary to accommodate those who wish to perform partial procedures. The illustrated test setup in the Setup Conditions shows all test equipment needed to perform the step, as well as the setup necessary to begin the step instructions.

Partial Procedures

Part I-Performance Check. To perform a partial Performance Check procedure, first determine which electrical specifications are to be checked. Table 6-1, Performance Check Summary, lists the applicable electrical specifications from Section 1, General Information, and provides references to the step(s) in which the performance requirements are checked. The Performance Check Index, at the start of Part I-Performance Check, provides a convenient means for locating the desired subsections and steps. For example: If the video channel had been repaired and a performance check was considered necessary, use the Performance Check Summary table to locate the applicable specifications affected by the repair, and the step title of Part I-Performance Check in which those performance requirements are checked. Then use the Performance Check Index to locate the Video Channel subsection and the step and page number of the applicable step(s).

Any step of a subsection can be performed separately by following the instructions given below.

1. Locate the desired subsection and applicable steps (e.g., B1, B2, B4, etc.) with the Performance Check Summary table and the Performance Check Index.

2. Perform the Performance Check Power-Up Sequence at the start of Part I-Performance Check, and the instructions under **Before You Begin** and Preliminary Control Settings at the beginning of the subsection.

3. Perform the Setup Conditions instructions for the desired step. Disregard any control settings which are the same as those under Preliminary Control Settings.

4. Proceed with the lettered instructions (e.g., a, b, c, etc.).

NOTE

If the steps performed are consecutive, it is not necessary to repeat the Preliminary Control Settings after the first step. However, when a step is skipped, the Preliminary Control Settings must be performed again.

Part II-Adjustment and Performance Check. Although each step in the Part II—Adjustment and Performance Check procedure can be performed independently, we recommend that the entire subsection be performed if any adjustments are made. Table 6-1, Performance Check Summary, lists the electrical specifications from Section 1, General Information, and provides references to the step(s) in which the performance requirements are checked and applicable adjustments are made. The Adjustment and Performance Check Index, at the start of Part II—Adjustment and Performance Check, provides a convenient means for locating the desired subsections and steps. For example: if the A5 Low-Voltage Power Supply board had been replaced, use the Performance Check Summary table to locate the applicable specifications affected by the repair, and the step title(s) of Part II—Adjustment and Performance Check in which those performance requirements are checked or adjusted. Then use the Adjustment and Performance Check Index to locate the Power Supply subsection and the step and page number of the applicable step(s).

A heading system is provided to readily identify the steps (A1, A2, B1, B2, etc.) that contain performance check and/or adjustment instructions. For example, if CHECK appears in the title of a step, a performance requirement listed in the Specification is checked. If ADJUST appears as the first word in the title, the step concerns one or more internal adjustments. And if CHECK/ADJUST appears in the title, the step involves one or more performance requirement checks and adjustments.

The alphabetical instructions under each step (a, b, c, etc.) may contain CHECK, EXAMINE, ADJUST, or INTERACTION as the first word of the instruction. These terms are defined as follows:

1. **CHECK**—indicates that the instruction accomplishes a performance requirement check.

2. **EXAMINE**—usually precedes an ADJUST instruction and describes how to determine whether the adjustment is necessary.

3. **ADJUST**—describes which adjustment to make and the desired result. We recommend that adjustments not be made if a previous CHECK or EXAMINE instruction indicates that no adjustment is necessary.

4. **INTERACTION**—indicates that the adjustment described in the preceding instruction interacts with other circuits. The nature of the interaction is described and reference is made to the step(s) affected.

ADJUSTMENT INTERVAL

To maintain instrument accuracy, check the performance of the 634 every 1000 hours of operation, or every 6 months if used infrequently. Before complete adjustment, thoroughly clean and inspect this instrument as outlined in Section 5, Maintenance.

TEKTRONIX FIELD SERVICE

Tektronix Field Service Centers and the Factory Service Center provide instrument repair and adjustment services. Contact your Tektronix Field Office or representative for further information.

TABLE 6-1

Performance Check Summary

Characteristic	Performance Requirement	Performance Check Procedure Title	Adjustment and Performance Check Procedure Title
VIDEO CHANNEL			
Sync Pulse	Negative (negative black level).	Does not normally require customer verification.	
Return Loss	46 dB to 5 MHz with internal 75 Ω termination and power on.	B1. Check Input Return Loss.	B6. Check/Adjust Input Return Loss.
Maximum Non-destructive Input Voltage	±5 V peak.	Specification applicable under fault conditions only; therefore this is not a procedural check.	
Bandwidth	1 Hz to at least 10MHz. Option 14: 1 Hz to at least 20 MHz.	B2. Check Bandwidth.	B7. Check Bandwidth.
DC Restoration	Referenced to back porch.	B3. Check DC Restoration.	B8. Check DC Restoration.

TABLE 6-1 (continued)

Performance Check Summary

Characteristic	Performance Requirement	Performance Check Procedure Title	Adjustment and Performance Check Procedure Title
DEFLECTION			
Linearity			
Display Area			
9 cm diameter circle centered within the 9 x 12 cm graticule area.	Within 0.5% of the height (0.045 cm or 0.018 inches).	C1. Check Vertical Linearity; C3. Check Horizontal Linearity.	D4. Check/Adjust Vertical Linearity; D5. Check/Adjust Horizontal Linearity.
9 x 12 cm graticule area excluding the centered 9 cm diameter circle.	Within 1% of the height (0.090 cm or 0.035 inches).		
Linearity (Option 1 Only)			
Display Area			
9 cm diameter circle centered within the 9 x 12 cm graticule area.	Within 1% of the height (0.090 cm or 0.035 inches).		
9 x 12 cm graticule area excluding the centered 9 cm diameter circle.	Within 2% of the height (0.180 cm or 0.070 inches).	C2. Check Option 1 Vertical Linearity; C4. Check Optional Horizontal Linearity.	D6. Check/Adjust Option 1 Vertical Linearity; C7. Check/Adjust Option 1 Horizontal Linearity.
Sweep Rate			
Vertical	60 ramps/second; sync pull-in ±2%.	Does not normally require customer verification.	
Horizontal	15,750 ramps/second; sync pull-in ±2%.		
VIDEO AMPLITUDE			
Amplitude	0.35V to 2V peak-to-peak (max).	D1. Check Amplitude.	E1. Check Amplitude.
CRT DISPLAY			
Acceleration Potential	15 kV; ±5% accuracy, 1% regulation.	Does not normally require customer verification.	
Heater Voltage	6.2 V at 103 mA, ±5%.		
Faceplate	Flat.		

TABLE 6-1 (continued)

Performance Check Summary

Characteristic	Performance Requirement	Performance Check Procedure Title	Adjustment and Performance Check Procedure Title
Quality Area	12 cm horizontal by 9 cm vertical.	Does not normally require customer verification.	
Diagonal (Quality area)	15 cm (5.91 inches).		
Deflection Angle	56 grads (50.4°).		
Phosphor	P45.		
Brightness	At least 150 footlamberts.		
Resolution	1100 lines center area at 30 footlamberts.		
Resolution (Option 1)	650 lines at screen center. 550 lines on 9 cm circle. 300 lines on 9 x 12 corners.		
Corner Defocus	650 lines at 30 footlamberts. 900 lines at 30 footlamberts 9 cm circle.		

POWER SOURCE

Line Voltage Range		Does not normally require customer verification.	
110 V AC (Nominal)	90 to 110 V ac 99 to 121 V ac 108 to 132 V ac		
220 V AC (Nominal)	180 to 220 V ac 198 to 242 V ac 216 to 250 V ac		
Line Frequency Range	48 to 440 Hz.		
Power Requirements from an external source			
Option 20 only			
DC Supplies	+9 V, ±10%, 300 ma, 1 V max. ripple. +23 V, ±10%, 1.0 A, 6 V max. ripple. -22 V, ±10%, 700 ma, 3 V max. ripple.	A1. Check Option 20 Regulation.	A1. Check Option 20 Regulation.
Monitor Regulated Output Voltages	±0.2%.		
Total Power Consumed	45 W.		

@

TEST EQUIPMENT REQUIRED

The test equipment listed in Table 6-2 is required for complete calibration of this instrument. The specifications for test equipment, given in Table 6-2, are the minimum required to meet the Performance Requirements. Detailed operating instructions for test equipment are omitted in these procedures. Refer to the test equipment instruction manual if more information is needed.

If only a Performance Check is to be performed, not all of the listed test equipment is required. Items used only for calibration are indicated by footnote 1. The remaining pieces of equipment are common to both procedures.

SPECIAL FIXTURES

Special fixtures are used only where they facilitate instrument adjustment. These fixtures are available from Tektronix, Inc. Order by part number from Tektronix Field Offices or representatives.

TEST EQUIPMENT ALTERNATIVES

All of the listed test equipment is required to completely calibrate this instrument. However, complete checking or adjusting may not always be necessary or desirable. You may be satisfied with checking only selected characteristics, thereby reducing the amount of test equipment actually required.

The calibration procedures are based on the first item of equipment given as an example. When other equipment is substituted, control settings or setups may need to be altered. If the exact item of equipment given as an example in Table 6-2 is not available, first check the specifications column carefully to see if any other equipment might suffice. Then check the Purpose column to see what this item is used for. If used for a check or adjustment that is of little or no importance for your measurement requirements, the item and corresponding step(s) can be deleted.

TABLE 6-2

Test Equipment

Description	Minimum Specifications	Purpose	Examples
1. Test Oscilloscope with 10X probe	Bandwidth, dc to at least 50 MHz; deflection Factor, 1 mV/div to 5 V/div; sweep range 0.5 μs to 5 s/div.	Check video channel bandwidth, input bandwidth, and input return loss.	a. TEKTRONIX 7603 Oscilloscope Mainframe with 7A13 Differential Comparator and vertical amplifier, 7B53A Dual Time Base, and P6053B 3.5-foot probe. b. Refer to the Tektronix catalog for a compatible oscilloscope system.
2. Sine-wave Generator	Frequency Range, to at least 20 MHz; Flatness, within 1% of reference over frequency range.	Check video channel bandwidth and input return loss.	a. TEKTRONIX SG503 Leveled Sine-Wave Generator (operates in TM500-Series power Module).
3. Return Loss Bridge	Frequency Range, to at least 10 MHz; Termination resistance 75Ω ±0.2%.	Input return loss check and adjustment.	a. TEKTRONIX 015-0149-00 Return Loss Bridge.
4. Precision dc voltmeter[1] (with leads)	Measurement range, 100 V; accuracy, within 0.1%. Dc current range, 2A.	Adjust high voltage.	a. TEKTRONIX DM502A Option 2 Digital Multimeter (operates in TM500-series power module).
5. Video Signal Generator	Staircase amplitude, 100 IRE ±2 IRE; Window amplitude, 100 IRE ±2 IRE; Crosshatch pattern, 77 IRE ±2 IRE peak.	Video and linearity checks and adjustments.	a. TEKTRONIX 1470 NTSC Color Sync & Test Signal Generator.

[1]Used for calibration only, NOT for performance check.

TABLE 6-2 (continued)

Test Equipment

Description	Minimum Specifications	Purpose	Examples
6. Linearity Chart Graticule	Accuracy, ±5 mils; Chart area, 9 x 12 cm.	Linearity checks and adjustments.	a. Tektronix Part 337-2537-01.
7. 50-ohm cable (1 required)	Impedance, 50Ω; type, RG-58/U; length, 42 inches; connectors, BNC.	Used with return loss bridge.	Tektronix Part 012-0057-01.
8. 75-ohm cable (1) required)	Impedance, 75Ω; type, RG-59/U; length, 42 inches; connectors, BNC.	Used with video signal generator.	a. Tektronix Part 012-0074-00.
9. Minimum loss attenuator	Impedance, 50 to 75Ω; Power, 1/2 W; connectors, BNC.	Used with return loss bridge.	a. Tektronix Part 011-0057-00.
10. Resistor	Resistance, 16 Ω; ±5%; 1/4 watt.	Video amplitude check.	a. Tektronix Part 315-0160-00.
11. Screwdriver[1]	3-inch shaft, 3/32-inch bit for slotted screws.	Adjustments.	a. Xcelite R3323.
12. Low-capacitance screwdriver[1]	1 1/2-inch shaft.	Adjust variable capacitor.	a. Tektronix Part 003-0000-00.
13. Insulated screwdriver[1]	7 1/2-inch shaft.	Adjust high voltage.	a. Tektronix Part 003-0001-00.
14. Nominal +23 V dc power supply (required for Option 20 Monitors only)	Output voltage range, +20.7 to +25.3 volts; output current, at least 2.5 Amps.	Supply positive voltage to operate the Option 20 instrument. Check regulation over input voltage range.	a. Power Mate Corp. Model BPE 34E.
15. Nominal −22 V dc power supply (required for Option 20 Monitors only)	Output voltage range, -19.8 to -24.2 volts; output current at least 1.5 Amps.	Supply negative voltage to operate the Option 20 instrument. Check regulation over input voltage range.	a. Power Mate Corp. BP 34D.
16. Nominal +9 V dc power supply (required for Option 20 Monitors only)	Output voltage range, +8 to +10 volts; output current at least 0.5 Amp.	Supply positive voltage to operate the Option 20 instrument. Check regulation over input voltage range.	a. Power Mate Corp. BP 34C.
17. Option 1 Linearity Chart Graticule	Accuracy, ±5 mils; chart area, 9 x 12 cm.	Option 1 linearity checks and adjustments.	a. Tektronix Part 337-2537-05.
18. High Line Rate Video Crosshatch Signal Generator (required for Option 15 monitors only.)	Staircase amplitude, 100 IRE ±2 IRE; Window amplitude, 100 IRE ±2 IRE; Crosshatch pattern, 77 IRE ±2 IRE peak. Line rate outputs of 675, 729, 875, 945, and 1084.	Option 15 linearity checks and adjustments.	a. Visual Information Institute Inc. Model 1203 Signal Generator and Model 1303 Sync Generator.

[1]Used for calibration only, NOT for performance check.

PART I—PERFORMANCE CHECK

The following procedure checks the performance of the instrument without removing instrument covers or making internal adjustments. All tolerances given are as specified in the Specification tables (section 1) in this manual.

Part II-Adjustment and Performance Check provides the information necessary to: (1) verify that the instrument meets the electrical specifications, (2) verify that all controls function properly, and (3) perform all internal adjustments.

A separate Operators Checkout Procedure is provided in the Operators Manual for familiarization with the instrument and also to verify that all controls function properly.

PERFORMANCE CHECK PROCEDURE INDEX

PERFORMANCE CHECK POWER-UP SEQUENCE

NOTE

The performance of this instrument can be checked at any ambient temperature from 0° to 50° C unless otherwise stated.

1. Check that internal Line Voltage Selector plug has been set for correct input line voltage (see Section 3, Installation).

NOTE

For Option 20 Monitors: Connect your instrument to the DC Power Supplies as shown in Figure 6-1.

2. Remove any cabinet panels to gain access to the internal controls and test points.

3. Connect the power cord to a suitable line voltage source. Pull out POWER pushbutton and allow at least 20 minutes warmup before proceeding.

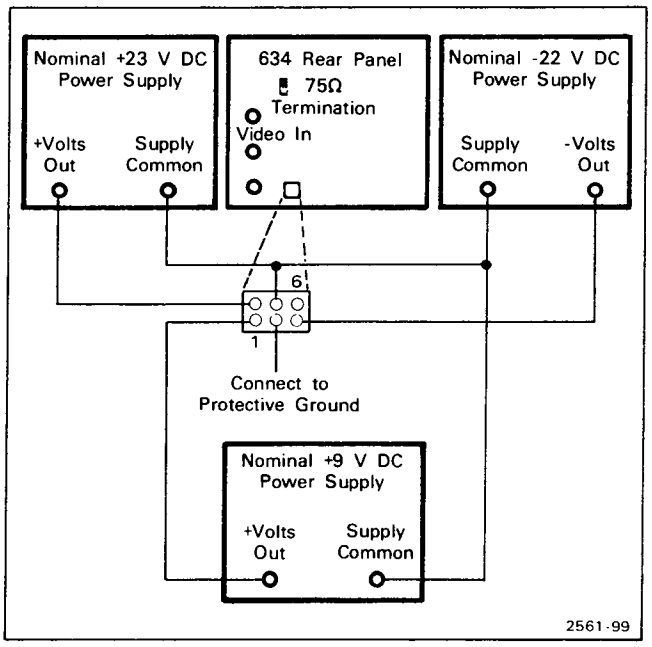

Figure 6-1. 634 Option 20 external power supply connections.

A. OPTION 20 POWER SUPPLY

Equipment Required:

1. Precision dc voltmeter
2. Nominal +23 V dc power supply
3. Nominal −22 V dc power supply
4. Nominal +9 V dc power supply

BEFORE YOU BEGIN:

(1) Perform the Performance Check Power-Up Sequence.

(2) Refer to Section 7, Instrument Options, and the Change Information at the rear of this manual for any modifications which may affect this procedure.

(3) See the Test Point and Adjustment Locations foldout page in Section 9, Diagrams and Circuit Board Illustrations.

OPTION 20 POWER SUPPLY PRELIMINARY CONTROL SETTINGS:

BRIGHTNESS ..... Visible display

CONTRAST ..... Visible display

FOCUS ..... Well-defined display

75 Ω TERMINATION ..... ON

A1. CHECK OPTION 20 REGULATION

SETUP CONDITIONS

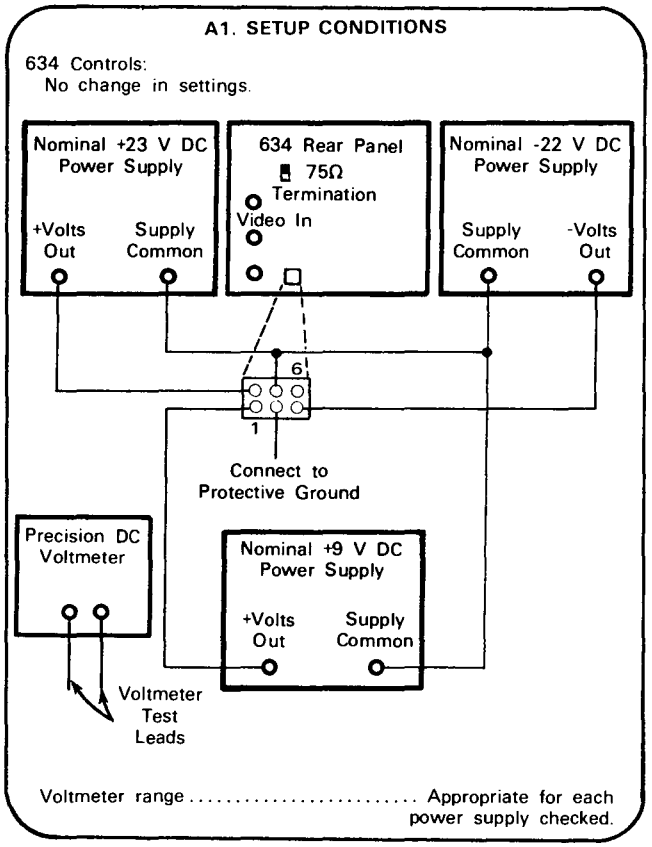

a. Table 6-3 lists the low-voltage supplies in this instrument. Connect precision dc voltmeter between +15 V test point and ground.

TABLE 6-3

Low-Voltage Supply Accuracy

Supply	Regulation Accuracy	Ripple
-15 V dc	-14.25 to -15.75 V dc	less than 100 mV
+15 V dc	+14.25 to +15.75 V dc	less than 100 mV
+5 V dc	+4.75 to +5.25 V dc	less than 50 mV

b. **CHECK**—Voltmeter for reading within voltage regulation range given in Table 6-3 for appropriate supply.

c. Set +23 V dc power supply output voltage to +25.3 volts.

d. **CHECK**—Voltmeter for reading within voltage regulation range given in Table 6-3 for appropriate supply.

e. Set +23 V dc power supply output voltage to +20.7 volts.

f. **CHECK**—Voltmeter for reading within voltage regulation range given in Table 6-3 for appropriate supply.

g. Set +23 V dc power supply output voltage to +23 volts. Set -22 V dc power supply output voltage to -19.8 volts.

h. Connect precision voltmeter between -15 V test point and ground.

i. **CHECK**—Voltmeter for reading within voltage regulation range given in Table 6-3 for appropriate supply.

j. Set -22 V dc power supply output voltage to -24.2 volts.

k. **CHECK**—Voltmeter for reading within voltage regulation range given in Table 6-3 for appropriate supply.

l. Set -22 V dc power supply output voltage to -22 volts. Set +9 V dc power supply to +8 volts.

m. Connect precision dc voltmeter between +5 V test point and ground.

n. **CHECK**—Voltmeter for reading within voltage regulation range given in Table 6-3 for appropriate power supply.

o. Set +9 V dc power supply output voltage to +10 volts.

p. **CHECK**—Voltmeter for reading within voltage regulation range given in Table 6-3 for appropriate power supply.

q. Set +9 V dc power supply output voltage to +9 volts and remove precision dc voltmeter.

B. VIDEO CHANNEL

Equipment Required:

1. Test oscilloscope
2. Sine-wave generator
3. Return loss bridge
4. Video-signal generator
5. 50-ohm cable
6. 75-ohm cable
7. Minimum loss attenuator

BEFORE YOU BEGIN:

(1) Perform the Performance Check Power-Up Sequence. (Not necessary if continuing Performance Check.)

(2) Refer to Section 1, Instrument Options, and the Change Information at the rear of this manual for any modifications which may affect this procedure.

(3) See the Test Point and Adjustment Locations foldout page in Section 9, Diagrams and Circuit Board Illustrations.

VIDEO CHANNEL PRELIMINARY CONTROL SETTINGS:

BRIGHTNESS ..... Visible display
CONTRAST ..... Visible display
FOCUS ..... Well-defined display
75 Ω TERMINATION ..... ON
Sync Select
(internal switch) ..... Int

B1. CHECK INPUT RETURN LOSS

SETUP CONDITIONS

B1. SETUP CONDITIONS

634 Controls:
No change in settings.

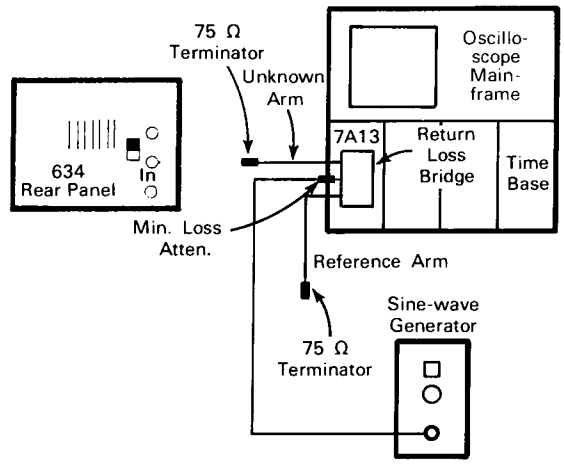

Test Oscilloscope Controls:
Deflection Factor ..... 50 mV/div
Input Coupling ..... DC
Triggering ..... Auto, Internal
Sweep rate ..... 1 ms/div
Display ..... Well-defined, visible display

Sine-wave Generator Controls:
Frequency ..... 50 kHz

a. Remove 75 Ω termination from unknown arm of return loss bridge.

b. Set sine-wave generator for a 5 cm display amplitude on test oscilloscope.

c. Connect 75 Ω termination to return loss bridge unknown arm. Set sine-wave generator to 5 MHz. Set test oscilloscope for 1 mV/div vertical sensitivity. The test oscilloscope display should be 1 mV or less in amplitude. If display is more than 1 mV in amplitude adjust return loss bridge balance control.

d. Remove 75 Ω termination from return loss bridge unknown arm. Connect return loss bridge unknown arm to 634 VIDEO INPUT connector.

e. **CHECK**—Input return loss is at least -46 dB (1.25 mV or less) from 50 kHz to 5 MHz.

B2. CHECK BANDWIDTH

SETUP CONDITIONS

NOTE

If the preceding step was not performed, first refer to the Video Channel Preliminary Control Settings, then proceed with the following instructions.

B2. SETUP CONDITIONS

634 Controls
No change in settings.

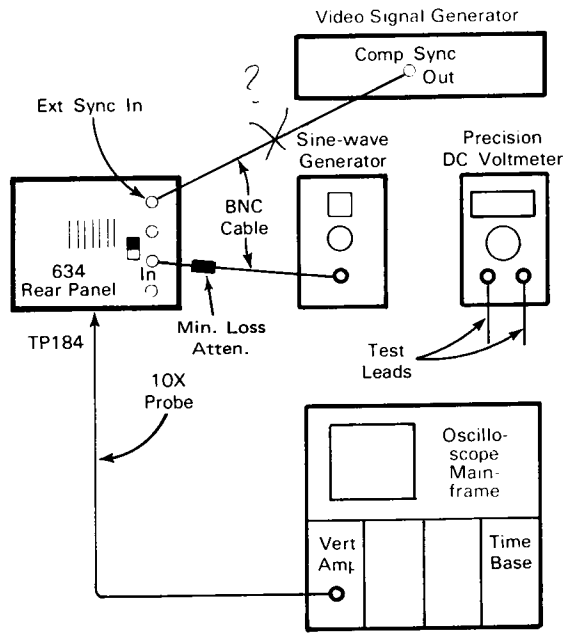

Test Oscilloscope Controls:
- Deflection Factor ..... 5 V/div
- Input Coupling ..... AC
- Triggering ..... Auto, Internal
- Sweep rate ..... 1 ms/div
- Display ..... Well-defined, visible display

Sine-wave Generator Controls:
- Frequency ..... 50 kHz

Precision DC Voltmeter:
- Range ..... 50 volts

NOTE

If your instrument does not have an external sync input connector, connect the sync output of the video signal generator to P107 on the Interface circuit board. (See Test Point and Adjustment Locations.)

a. Set switch S124 on Interface circuit board to Ext.

b. Set BRIGHTNESS control for -50 volts dc at TP184, measured with precision dc voltmeter, then disconnect the voltmeter leads. Set CONTRAST control for 20 volts p-p of sine-wave amplitude on test oscilloscope display with 1 volt of 50 kHz sine-wave input to monitor.

c. Change sine-wave generator from 50 kHz to 10 MHz. (For Option 14: Change sine-wave generator from 50 kHz to 20 MHz.)

NOTE

At low frequencies, the dc restorer circuitry may cause a beat note effect to be displayed due to the use of a non-synchronized signal.

d. **CHECK**—For 14 volts or more (-3 dB or less) sine-wave signal on test oscilloscope.

e. Set switch S124 to Int.

B3. CHECK DC RESTORATION

SETUP CONDITIONS

NOTE

If the preceding step was not performed, first refer to the Video Channel Preliminary Control Settings, then proceed with the following instructions.

B3. SETUP CONDITIONS

634 Control Setting:
- CONTRAST ..... Fully counterclockwise

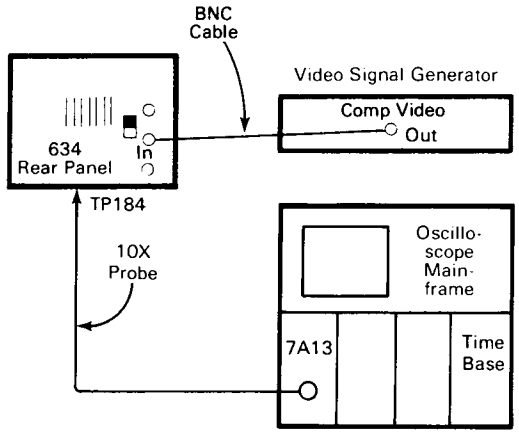

Test Oscilloscope Controls:
- Deflection Factor ..... 50 mV/div
- Input Coupling ..... DC
- Triggering ..... Auto, Internal
- Sweep rate ..... 10 μs/div
- Display ..... Well-defined display

Video Signal Generator:
- Full Field Test Signal ..... Window

NOTE

Shield monitor display from ambient light with a black cloth during this step.

a. Set BRIGHTNESS control so that raster background light level just fades out (-70 volts ±5 V on test oscilloscope display).

b. Set peak of video signal on test oscilloscope display to -50 volt level (corresponds to 30 footlamberts light output) with CONTRAST control.

c. Change video-signal generator to High APL signal output. Test oscilloscope video peak level should be same as window signal indicating that parts a and b were properly performed.

d. Switch video-signal generator to Low APL.

e. **CHECK**—Video peak on test oscilloscope display shifts no more than 400 mV (1.5 footlamberts, 5% of part b) in 5 seconds.

f. Interaction—Repeat Step B2 if video level shift is greater than 400 mV in 5 seconds.

C. DEFLECTION

Equipment Required:

1. Video-signal generator
2. Linearity chart graticule
3. 75-ohm cable
4. Option 1 linearity chart graticule

BEFORE YOU BEGIN:

(1) Perform the Performance Check Power-Up Sequence. (Not necessary if continuing Performance Check.)

(2) Refer to Section 7, Instrument Options, and the Change Information at the rear of this manual for any modifications which may affect this procedure.

(3) See the Test Point and Adjustment Locations foldout page in Section 9, Diagrams and Circuit Board Illustrations.

DEFLECTION PRELIMINARY CONTROL SETTINGS:

BRIGHTNESS ..... Visible display
CONTRAST ..... Visible display
FOCUS ..... Well-defined display
75 Ω TERMINATION ..... ON

C1. CHECK VERTICAL LINEARITY

SETUP CONDITIONS

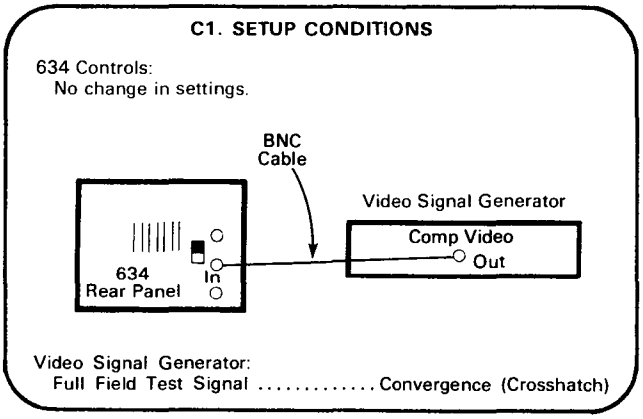

a. Replace clear graticule with standard linearity chart graticule. Place scribed side of graticule against crt faceplate to reduce parallax.

b. **CHECK**—Crosshatch pattern display is centered vertically with linearity chart graticule and horizontal crosshatch lines are within linearity chart graticule circles.

C2. CHECK HORIZONTAL LINEARITY

SETUP CONDITIONS

NOTE

If the preceeding step was not performed, first refer to the Deflection Preliminary Control Settings, then proceed with the following instructions.

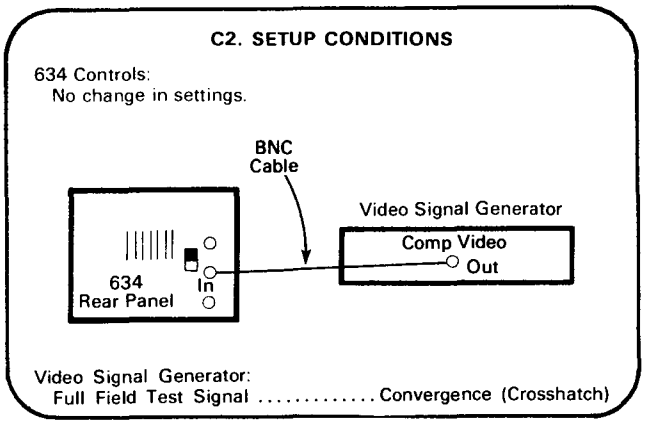

a. Replace clear graticule with standard linearity chart graticule. Place scribed side of graticule against crt faceplate to reduce parallax.

b. **CHECK**—Crosshatch pattern display is centered horizontally with linearity chart graticule and vertical crosshatch lines are within linearity chart graticule circles.

C3. CHECK OPTION 1 VERTICAL LINEARITY

SETUP CONDITIONS

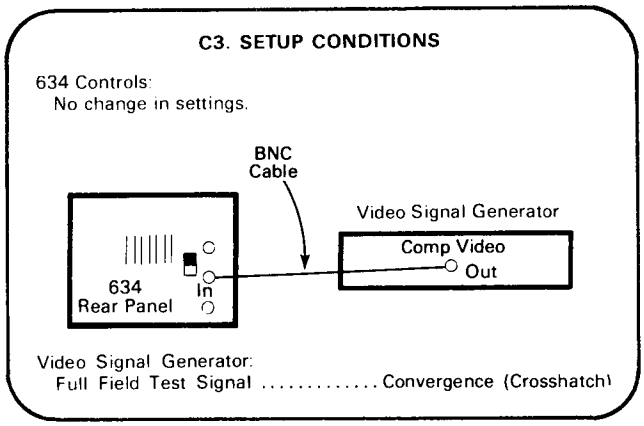

a. Replace clear graticule with Option 1 linearity chart graticule. Place scribed side of graticule against crt faceplate to reduce parallax.

b. **CHECK**—Crosshatch pattern display is centered vertically with linearity chart graticule and vertical crosshatch lines are within linearity graticule circles.

C4. CHECK OPTION 1 HORIZONTAL LINEARITY

SETUP CONDITIONS

NOTE

If the preceding step was not performed, first refer to the Deflection Preliminary Control Settings, then proceed with the following instructions.

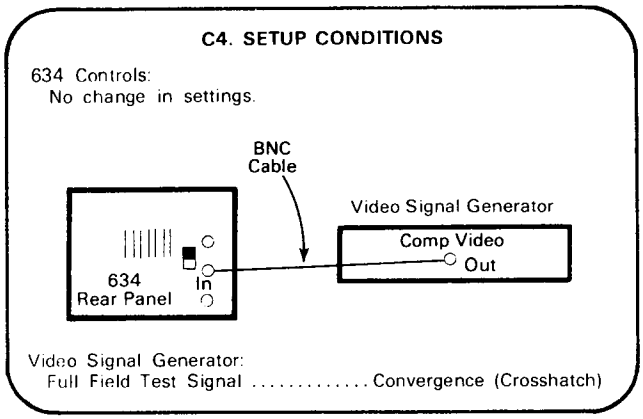

a. Replace clear graticule with Option 1 linearity chart graticule. Place scribed side of graticule against crt faceplate to reduce parallax.

b. **CHECK** — Crosshatch pattern display is centered horizontally with linearity chart graticule and vertical crosshatch lines are within linearity chart graticule circles. The perimeter of the donuts on the chart represents the limit of the specification defined for that given portion of the screen. Linearity in the quality area should be .5% of the CRT height. This amounts to .045 cm (.018 inches).

NOTE

The intersection of the centerlines (not necessarily the intersection of the traces) must fall within the perimeter of the donut to be within specificaion. See Figure 6-1A.

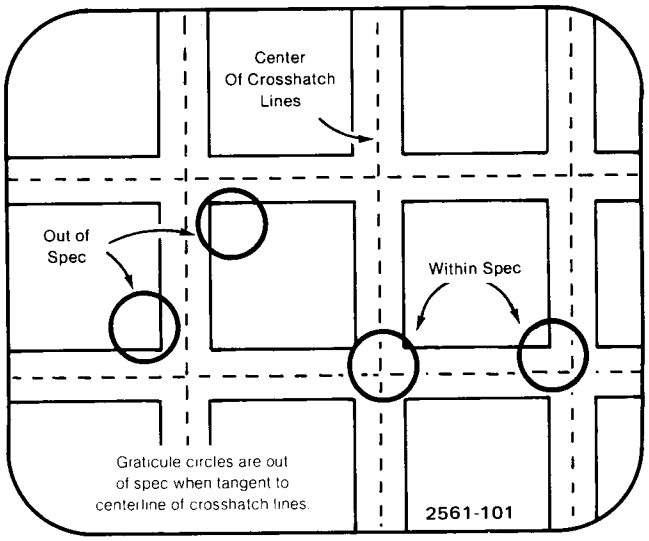

Figure 6-1A. Crosshatch Lines Within Graticule Circles.

D. VIDEO AMPLITUDE

Equipment Required:

1. Video-signal generator
2. 75-ohm cable
3. Resistor

BEFORE YOU BEGIN:

(1) Perform the Performance Check Power-Up Sequence. (Not necessary if continuing Performance Check.)

(2) Refer to Section 7, Instrument Options, and the Change Information at the rear of this manual for any modifications which may affect this procedure.

(3) See the Test Point and Adjustment Locations foldout page in Section 9, Diagrams and Circuit Board Illustrations.

VIDEO AMPLITUDE PRELIMINARY CONTROL SETTINGS:

BRIGHTNESS ..... Visible display
CONTRAST ..... Visible display
FOCUS ..... Well-defined display
75 Ω TERMINATION ..... OFF

D1. CHECK AMPLITUDE

SETUP CONDITIONS

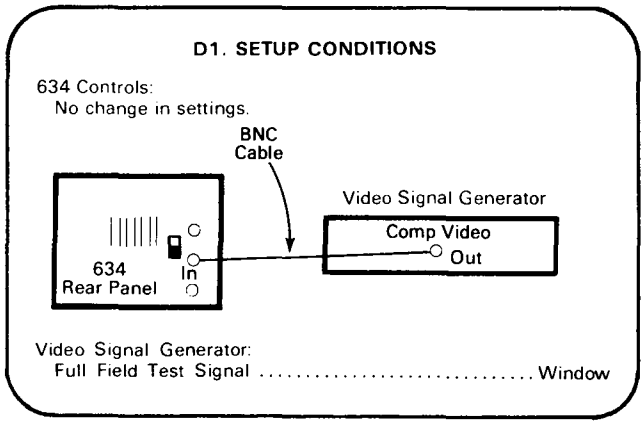

a. **CHECK**—For stable raster.

b. Insert 16 Ω resistor between loop-through connector and ground.

c. **CHECK**—For stable raster.

E. OPTION 15 DEFLECTION

Equipment Required:

1. High line rate video crosshatch signal generator
2. Linearity chart graticule
3. 75-ohm cable

BEFORE YOU BEGIN:

(1) Perform the Performance Check Power-Up Sequence. (Not necessary if continuing Performance Check.)

(2) Refer to Section 7, Instrument Options, and the Change Information at the rear of this manual for any modifications which may affect this procedure.

(3) See the Test Point and Adjustment Locations foldout page in Section 9, Diagrams and Circuit Board Illustrations.

OPTION 15 DEFLECTION PRELIMINARY CONTROL SETTINGS:

BRIGHTNESS ..... Visible display
CONTRAST..... Visible display
FOCUS ..... Well-defined display
75 Ω TERMINATION ..... ON

E1. CHECK OPTION 15 VERTICAL LINEARITY

SETUP CONDITIONS

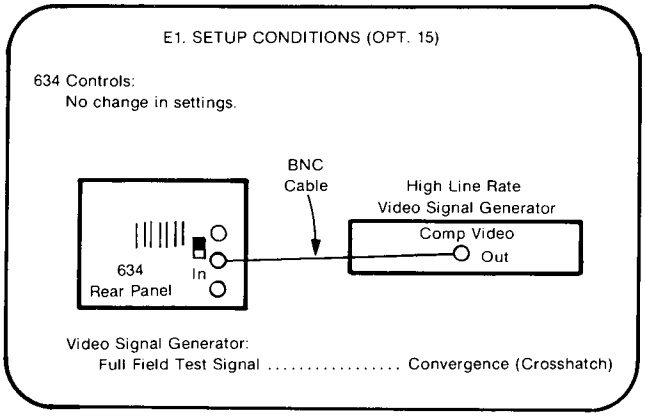

a. Replace clear graticule with standard linearity chart graticule. Place scribed side of graticule against crt faceplate to reduce parallax.

b. Set the high line rate video signal generator for the appropriate line rate.

c. **CHECK**—Crosshatch pattern display is centered vertically with linearity chart graticule and horizontal crosshatch lines are within linearity chart graticule circles.

E2. CHECK OPTION 15 HORIZONTAL LINEARITY

SETUP CONDITIONS

NOTE

If the preceding step was not performed, first refer to the Deflection Preliminary Control Settings, then proceed with the following instructions.

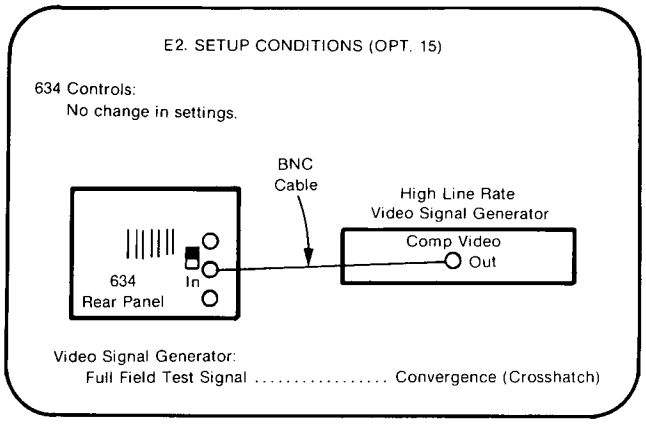

a. Replace clear graticule with standard linearity chart graticule. Place scribed side of graticule against crt faceplate to reduce parallax.

b. Set the video signal generator to the appropriate line rate if not done previously.

c. **CHECK** — Crosshatch pattern display is centered horizontally with linearity chart graticule and vertical crosshatch lines are within linearity chart graticule circles. The perimeter of the donuts on the chart represents the limit of the specification defined for that given portion of the screen. Linearity in the quality area should be .5% of the CRT height. This amounts to .045 cm (.018 inches).

NOTE

The intersection of the centerlines (not necessarily the intersection of the traces) must fall within the perimeter of the donut to be within specification. See Figure 6-1A.

PART II—ADJUSTMENT AND PERFORMANCE CHECK

The following procedure provides the information necessary to: (1) verify that the instrument meets the electrical specifications, (2) verify that all controls function properly, and (3) perform all internal adjustments.

Part I—Performance Check verifies the performance of the instrument without removing instrument covers or making internal adjustments. All tolerances given are as specified in the Specification tables (section 1) in this manual.

A separate Operators Checkout Procedure is provided in the Operators Manual for familiarization with the instrument and also to verify that all controls function properly.

ADJUSTMENT AND PERFORMANCE CHECK INDEX

ADJUSTMENT AND PERFORMANCE CHECK POWER-UP SEQUENCE

NOTE

The performance of this instrument can be checked at any ambient temperature from 0° to +50° C unless otherwise stated. Adjustments must be performed at an ambient temperature between +20° and +30° C for specified accuracies.

1. Check that the internal Line Voltage Selector plug has been set for the correct input line voltage (see Section 3, Installation).

NOTE

For Option 20 Monitors: Connect your instrument to the DC Power Supplies as shown in Figure 6-2.

2. Remove any cabinet panels to gain access to the internal controls and test points.
3. Connect the power cord to a suitable line voltage source. Pull out POWER pushbutton and allow at least 20 minutes warmup before proceeding.

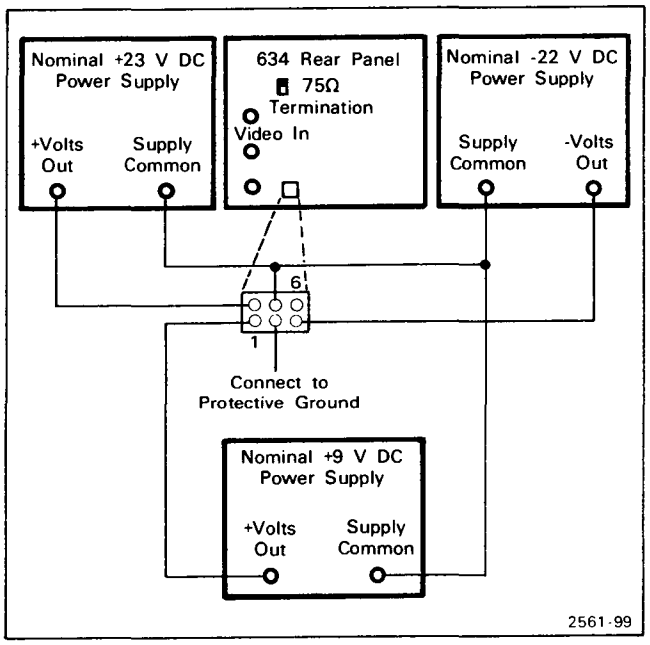

Figure 6-2. 634 Option 20 external power supply connections.

A. OPTION 20 POWER SUPPLY

Equipment Required:

1. Precision dc voltmeter
2. Nominal +23 V dc power supply
3. Nominal −22 V dc power supply
4. Nominal +9 V dc power supply

BEFORE YOU BEGIN:

(1) Perform the Adjustment and Performance Check Power-Up Sequence.

(2) Refer to Section 7, Instrument Options, and the Change Information at the rear of this manual for any modifications which may affect this procedure.

(3) See the Test Point and Adjustment Locations foldout page in Section 9, Diagrams and Circuit Board Illustrations.

OPTION 20 POWER SUPPLY PRELIMINARY CONTROL SETTINGS:

BRIGHTNESS ..... Visible display

CONTRAST ..... Visible display

FOCUS ..... Well-defined display

75 Ω TERMINATION ..... ON

A1. CHECK OPTION 20 REGULATION

SETUP CONDITIONS

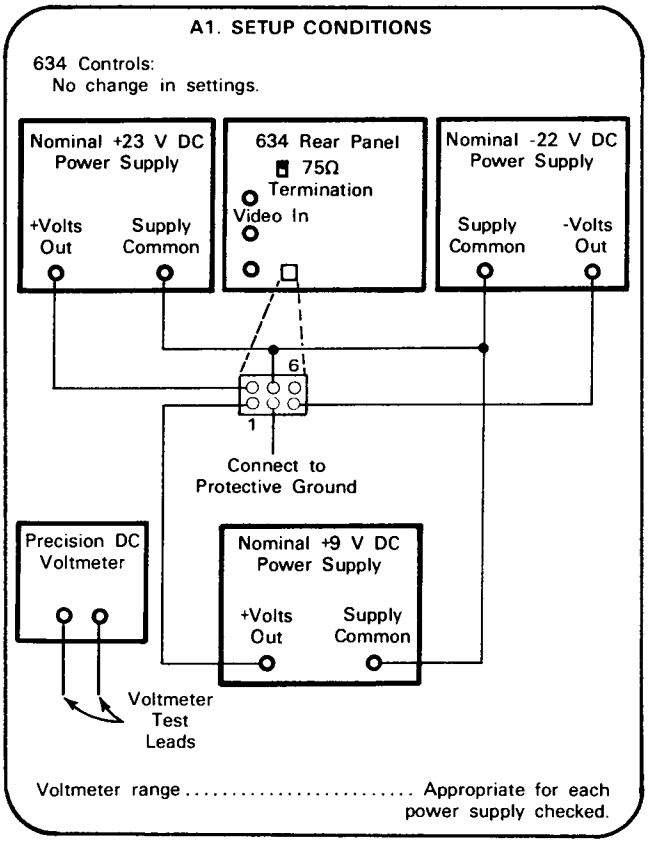

a. Table 6-4 lists the low-voltage supplies in this instrument. Connect the precision dc voltmeter between the +15 V test point and ground.

TABLE 6-4

Low-Voltage Supply Accuracy

Supply	Regulation Accuracy	Ripple
-15 V dc	-14.25 to -15.75 V dc	less than 100 mV
+15 V dc	+14.25 to +15.75 V dc	less than 100 mV
+5 V dc	+4.75 to +5.25 V dc	less than 50 mV

b. **CHECK**—The voltmeter for a reading within the voltage regulation range given in Table 6-4 for the appropriate supply.

c. Set the +23 V dc power supply output voltage to +25.3 volts.

d. **CHECK**—The voltmeter for a reading within the voltage regulation range given in Table 6-4 for the appropriate supply.

e. Set the +23 V dc power supply output voltage to +20.7 volts.

f. **CHECK**—The voltmeter for a reading within the voltage regulation range given in Table 6-4 for the appropriate supply.

g. Set the +23 V dc power supply output voltage to +23 volts, and the -22 V dc power supply output voltage to -19.8 volts.

h. Connect the precision voltmeter between the -15 V test point and ground.

i. **CHECK**—The voltmeter for a reading within the voltage regulation range given in Table 6-4 for the appropriate supply.

j. Set the -22 V dc power supply output voltage to -24.2 volts.

k. **CHECK**—The voltmeter for a reading within the voltage regulation range given in Table 6-4 for the appropriate supply.

l. Set the -22 V dc power supply output voltage to -22 volts. Set the +9 V dc power supply to +8 volts.

m. Connect the precision dc voltmeter between the +5 V test point and ground.

n. **CHECK**—The voltmeter for a reading within the voltage regulation range given in Table 6-4 for the appropriate power supply.

o. Set the +9 V dc power supply output voltage to +10 volts.

p. **CHECK**—The voltmeter for a reading within the voltage regulation range given in Table 6-4 for the appropriate power supply.

q. Set the +9 V dc power supply output votage to +9 volts and remove the precision dc voltmeter.

B. VIDEO CHANNEL

Equipment Required:

1. Test oscilloscope
2. Sine-wave generator
3. Return loss bridge
4. Video-signal generator
5. 50-ohm cable
6. 75-ohm cable
7. Minimum loss attenuator

BEFORE YOU BEGIN:

(1) Perform the Adjustment and Performance Check Power-Up Sequence (Not necessary if continuing adjustment and Performance Check.)

(2) Refer to Section 1, Instrument Options, and the Change Information at the rear of this manual for any modifications which may affect this procedure.

(3) See the Test Point and Adjustment Locations foldout page in Section 9, Diagrams and Circuit Board Illustrations.

VIDEO CHANNEL PRELIMINARY CONTROL SETTINGS:

BRIGHTNESS ..... Visible display
CONTRAST ..... Visible display
FOCUS ..... Well-defined display
75 Ω TERMINATION ..... ON

B1. ADJUST HIGH VOLTAGE (R455)

SETUP CONDITIONS

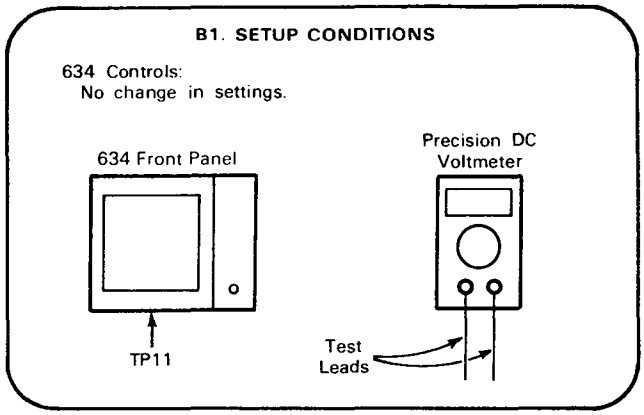

a. **EXAMINE**—TP11 on Interface circuit board for +100 V dc (105 V dc for Opt. 14).

b. **ADJUST**—R455 (HV Adj) on High Voltage circuit board for +100 V dc.

B2. ADJUST DC BALANCE (R125)

SETUP CONDITIONS

NOTE

If the preceding step was not performed, first refer to the Video Channel Preliminary Control settings, then proceed with the following instructions.

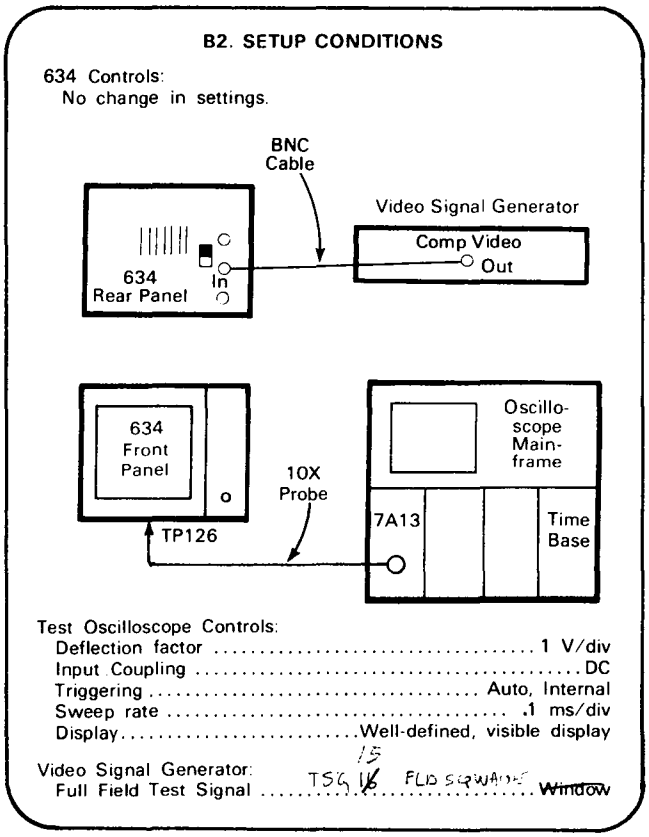

a. **EXAMINE**—That back porch of test oscilloscope waveform is at ground.

b. **ADJUST**—R125 (DC Bal) on Interface circuit board to position back porch to ground.

B3. ADJUST CUTOFF (R435)

SETUP CONDITIONS

NOTE

If the preceding step was not performed, first refer to the Video Channel Preliminary Control Settings, then proceed with following instructions.

B3. SETUP CONDITIONS

634 Controls:
No change in settings.

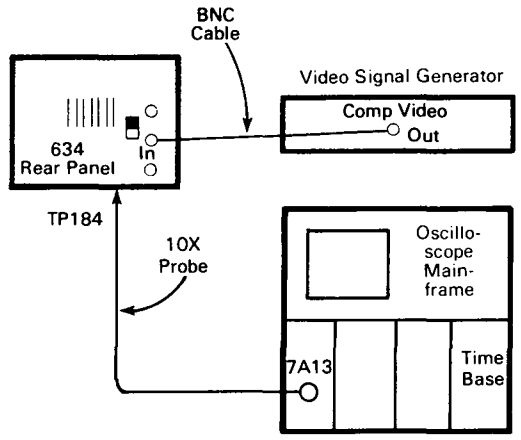

Test Oscilloscope Controls:
Deflection Factor ..... 10 V/div
Input Coupling ..... DC
Triggering ..... Auto, Internal
Sweep rate ..... .1 ms/div
Display ..... Well-defined display

Video Signal Generator: BLACK BURST
Full Field Test Signal ..... ~~Full Field (all buttons out)~~

a. Set front-panel BRIGHTNESS control to position back porch of test oscilloscope waveform at -70 volts.

b. **EXAMINE**—Raster background light level just fades from view. Shield monitor display from ambient light with black cloth during examination and adjustment.

on back

c. **ADJUST**—R435 (Cutoff Adj) on High Voltage circuit board (remove plastic safety shield) so that raster background light level just fades from view.

d. Replace plastic safety shield.

B4. ADJUST MINIMUM CONTRAST (R95)

SETUP CONDITIONS

NOTE

If the preceding step was not performed, first refer to the Video Channel Preliminary Control Settings, then proceed with the following instructions.

B4. SETUP CONDITIONS

634 Controls:
CONTRAST ..... Minimum (ccw)

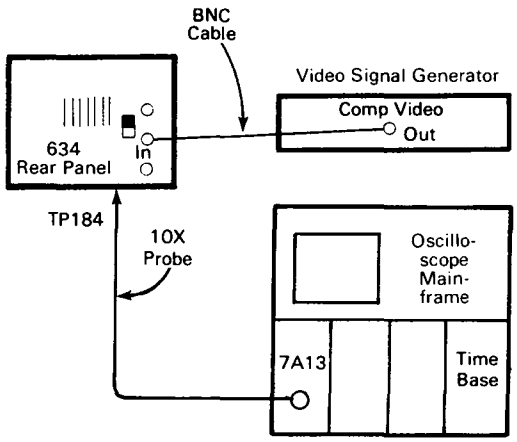

Test Oscilloscope Controls:
Deflection Factor ..... 1 V/div
Input Coupling ..... AC
Triggering ..... Auto, Internal
Sweep rate ..... 20 μs/div
Display ..... Well-defined display

Video Signal Generator
Full Field Test Signal ..... TSG 13 (CONTEP. HN) ~~Window~~

a. **EXAMINE**—Test oscilloscope display for 0 volts signal amplitude.

b. **ADJUST**—R95 (Minimum Contrast) on Interface circuit board for 0 volts signal amplitude.

B5. ADJUST RESTORE LEVEL (R65)

SETUP CONDITIONS

NOTE

If the preceding step was not performed, first refer to the Video Channel Preliminary Control Settings, then proceed with the following instructions.

B5. SETUP CONDITIONS

634 Controls:
BRIGHTNESS ..... Fully clockwise

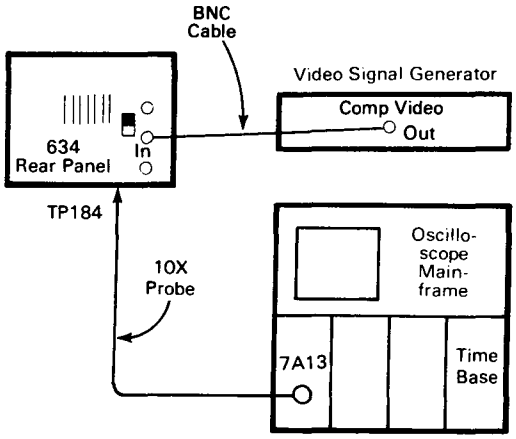

Test Oscilloscope Controls:
Deflection Factor ..... 10 V/div
Input Coupling ..... DC
Triggering ..... Auto, Internal
Sweep rate ..... .1 ms/div
Display ..... Well-defined display

Video Signal Generator:
Full Field Test Signal ..... Window

a. **EXAMINE**—Test oscilloscope display for a back porch level of -50 volts dc.

b. **ADJUST**—R65 (Restore Level) on Interface circuit board to place back porch at -50 volts dc.

B6. CHECK/ADJUST INPUT RETURN LOSS (C105)

SETUP CONDITIONS

NOTE

If the preceding step was not performed, first refer to the Video Channel Preliminary Control Settings, then proceed with the following instructions.

B6. SETUP CONDITIONS

634 Controls:
No change in settings.

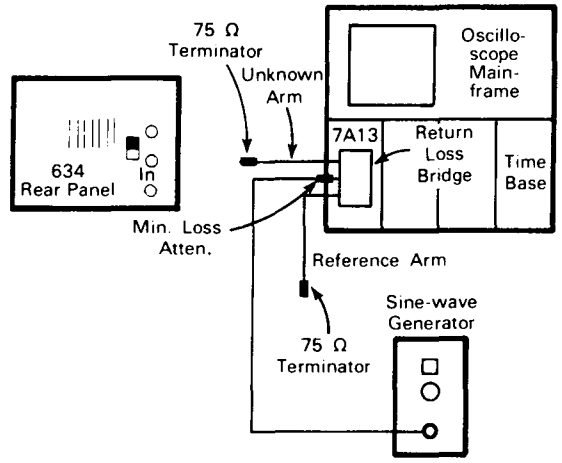

Test Oscilloscope Controls:
Deflection Factor ..... 50 mV/div
Input Coupling ..... DC
Triggering ..... Auto, Internal
Sweep rate ..... 1 ms/div
Display ..... Well-defined, visible display

Sine-wave Generator Controls:
Frequency ..... 50 kHz

a. Remove 75 Ω termination from unknown arm of return loss bridge.

b. Set sine-wave generator for 5 cm display amplitude on test oscilloscope.

c. Connect 75 Ω termination to return loss bridge unknown arm. Set sine-wave generator to 5 MHz. Set test oscilloscope for 1 mV/div vertical sensitivity. The test oscilloscope display should be 1 mV or less in amplitude. If display is more than 1 mV in amplitude, adjust the return loss bridge balance control.

d. Remove 75 Ω termination from return loss bridge unknown arm. Connect return loss bridge unknown arm to 634 VIDEO INPUT connector.

e. **CHECK**—Input return loss is at least -46 dB (1.25 mV or less) from 50 kHz to 5 MHz.

f. **ADJUST**—C105 (Return Loss) for -46 dB (1.25 mV) or less from 50 kHz to 5 MHz.

B7. CHECK/ADJUST BANDWIDTH

SETUP CONDITIONS

NOTE

If the preceding step was not performed, first refer to the Video Channel Preliminary Control Settings, then proceed with the following instructions.

B7. SETUP CONDITIONS

634 Controls:
No change in settings.

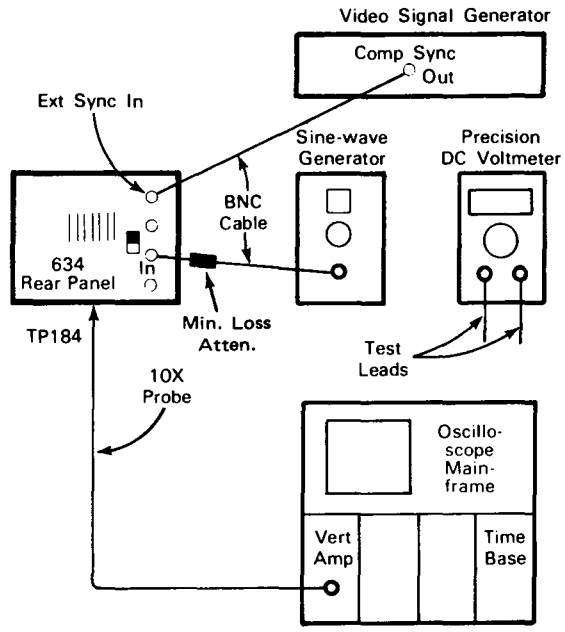

Test Oscilloscope Controls:
- Deflection Factor ..... 5 V/div
- Input Coupling ..... AC
- Triggering ..... Auto, Internal
- Sweep rate ..... 1 ms/div
- Display ..... Well-defined, visible display

Sine-wave Generator Controls:
- Frequency ..... 50 kHz

Precision DC Voltmeter:
- Range ..... 50 volts

NOTE

If your instrument does not have an external sync input connector, connect the sync output of the video signal generator to P107 on the Interface circuit board. (See Test Point and Adjustment Locations.)

a. Set S124 on Interface circuit board to Ext.

b. Set BRIGHTNESS control for -50 volts dc at TP184, measured with precision dc voltmeter, then disconnect the voltmeter leads. Set CONTRAST control for 20 volts p-p of sine-wave amplitude on test oscilloscope display with 1 volt of 50 kHz sine-wave input to monitor.

c. Change sine-wave generator from 50 kHz to 10 MHz. (For Option 14: Change sine-wave generator from 50 kHz to 20 MHz.)

d. **CHECK**—For 14 volts or more (−3 dB or less) sine-wave signal on test oscilloscope.

e. **ADJUST (Option 14 only)**—C174 (Bandwidth) for 14 volts or more (−3 dB or less) sine-wave signal on test oscilloscope.

NOTE

At low frequencies, the dc restorer circuitry may cause a beat note effect to be displayed due to the use of a non-synchronized signal.

B8. CHECK DC RESTORATION

SETUP CONDITIONS

NOTE

If the preceding step was not performed, first refer to the Video Channel Preliminary Control Settings, then proceed with the following instructions.

B8. SETUP CONDITIONS

634 Controls:
- CONTRAST ..... Fully counterclockwise

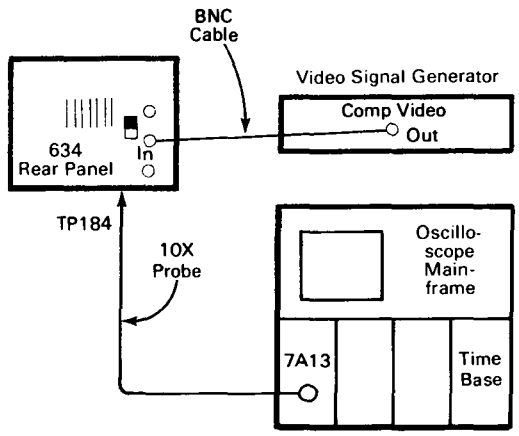

Test Oscilloscope Controls:
- Deflection Factor ..... 50 mV/div
- Input Coupling ..... DC
- Triggering ..... Auto, Internal
- Sweep rate ..... 10 μs/div
- Display ..... Well-defined display

Video Signal Generator:
- Full Field Test Signal ..... Window

NOTE

Shield monitor display from ambient light with a black cloth during this step.

a. Set BRIGHTNESS control so that raster background light level just fades out (-70 volts ±5 V on test oscillscope display; if not, repeat steps B2 and B3).

b. Set peak of video signal on test oscilloscope display to -50 volt level (corresponds to 30 footlamberts light output) with CONTRAST control.

c. Change video-signal generator to High APL signal output. Test oscilloscope video peak level should be same as window signal indicating parts a and b were properly performed.

d. Switch video-signal generator to Low APL.

e. **CHECK**—Video peak on test oscilloscope display shifts no more than 400 mV (1.5 footlamberts, 5% of step b) in 5 seconds.

f. Interaction—Repeat Step B7 if video level shift is greater than 400 mV in 5 seconds.

C. OPTION 13 VIDEO REVERSAL

Equipment Required:

1. Test oscilloscope
2. Video-signal generator
3. 75-ohm cable

BEFORE YOU BEGIN:

(1) Perform the Adjustment and Performance Check Procedure Power-Up Sequence. (Not necessary if continuing the Adjustment and Performance Check.)

(2) Refer to Section 7, Instrument Options, and the Change Information at the rear of this manual for any modifications which may affect this procedure.

(3) See the Test Point and Adjustment Locations foldout page in Section 9, Diagrams and Circuit Board Illustrations.

OPTION 13 VIDEO REVERSAL PRELIMINARY CONTROL SETTINGS:

BRIGHTNESS ..... Fully clockwise
CONTRAST ..... Fully counterclockwise
FOCUS ..... Well-defined display
75 Ω TERMINATION ..... ON

C1. ADJUST VIDEO REVERSAL (R715)

SETUP CONDITIONS

C1. SETUP CONDITIONS

634 Controls:
No change in settings.

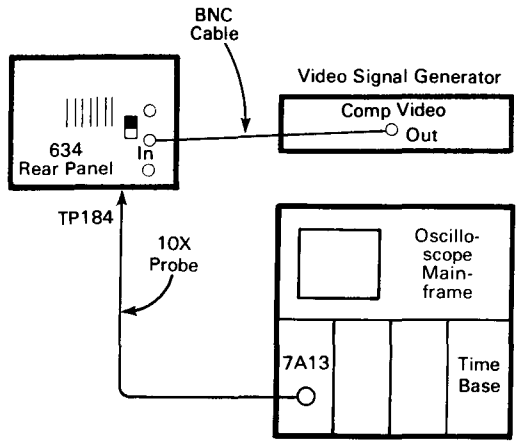

Test Oscilloscope Controls:
Deflection Factor ..... 10 V/div
Input Coupling ..... DC
Triggering ..... Auto, Internal
Sweep rate ..... 2 ms/div
Display ..... Well-defined display

Video Signal Generator:
Full Field Test Signal ..... Window

a. Set BRIGHTNESS control for -70 V dc at TP184 on Interface circuit board.

b. Rotate CONTRAST control until video peak on test oscilloscope is at -40 volts.

c. Switch S705 on Front Panel board to Reverse.

d. **EXAMINE**—Bottom of waveform (video peak) is at -70 volts.

e. **ADJUST**—R715 (Brightness Offset) on Front Panel board so that bottom of waveform (video peak) is at -70 volts.

NOTE

The optimum setting of R715 may vary in some applications. For optimum setting, apply a typical application video signal in place of the medium APL test signal and set the CONTRAST control in part b for best monitor display.

D. DEFLECTION

Equipment Required:

1. Video-signal generator
2. Linearity chart graticule
3. 75-ohm cable
4. Option 1 linearity chart graticule

BEFORE YOU BEGIN:

(1) Perform the Adjustment and Performance Check Power-Up Sequence. (Not necessary if continuing Adjustment and Performance Check.)

(2) Refer to Section 7, Instrument Options, and the Change Information at the rear of this manual for any modifications which may affect this procedure.

(3) See the Test Point and Adjustment Locations foldout page in Section 9, Diagrams and Circuit Board Illustrations.

D1. SETUP CONDITIONS

634 Controls:
No change in settings.

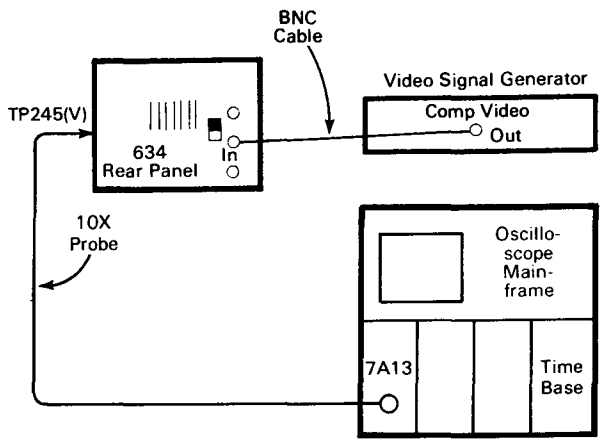

Test Oscilloscope Controls:
- Deflection Factor ..... 1 V/div
- Input Coupling ..... AC
- Triggering ..... Norm, Internal
- Sweep rate ..... 5 ms/div
- Display ..... Well-defined display

Video Signal Generator:
- Full Field Test Signal ..... Convergence (Crosshatch)

DEFLECTION PRELIMINARY CONTROL SETTINGS:

- BRIGHTNESS ..... Visible display
- CONTRAST ..... Visible display
- FOCUS ..... Well-defined display
- 75 Ω TERMINATION ..... ON

D1. ADJUST VERTICAL RATE (R230)

SETUP CONDITIONS

a. **EXAMINE**—Test oscilloscope waveform for 7 volts p-p amplitude.

b. **ADJUST**—R230 (V Rate) on the Sync Separator board for 7 volts p-p amplitude.

D2. ADJUST HORIZONTAL RATE (R260)

SETUP CONDITIONS

NOTE

If the preceding step was not performed, first refer to the Deflection Preliminary Control Settings, then proceed with the following instructions.

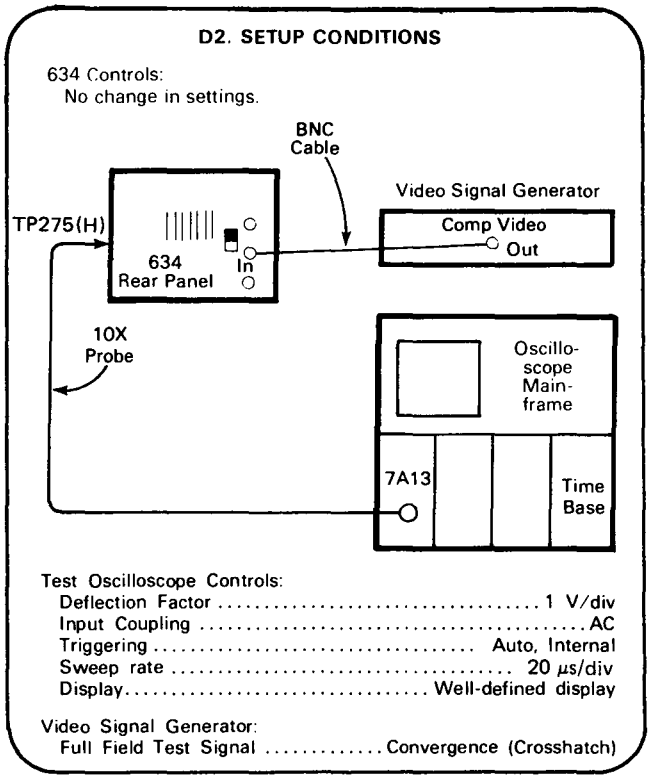

a. **EXAMINE**—Test oscilloscope waveform for 7 volts p-p amplitude.

b. **ADJUST**—R260 (H Rate) on the Sync Separator board for 7 volts p-p amplitude.

D3. ADJUST HOLD (R375)

SETUP CONDITIONS

NOTE

If the preceding step was not performed, first refer to the Deflection Preliminary Control Settings, then proceed with the following instructions.

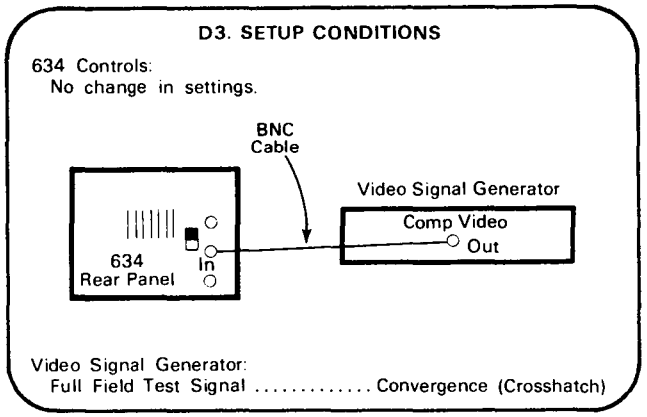

a. **EXAMINE**—Raster is horizontally stable.

b. **ADJUST**—R375 (Hold) on Yoke Driver board to midrange between horizontal lock-in limits.

D4. CHECK/ADJUST HORIZONTAL LINEARITY (L364, R270, R278, R302, R340, R345, R355)

SETUP CONDITIONS

NOTE

If the preceding step was not performed, first refer to the Deflection Preliminary Control Settings, then proceed with the following intructions.

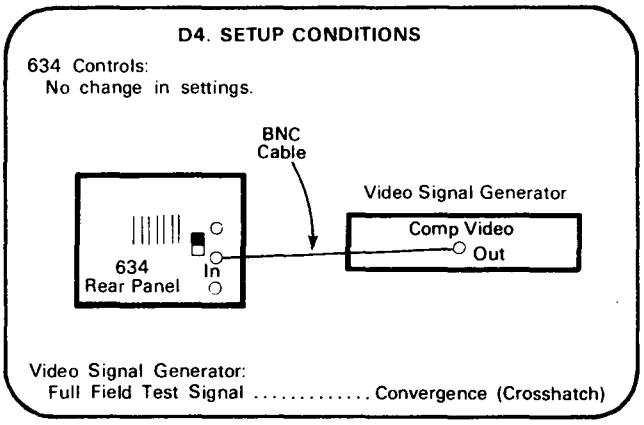

a. If an Option 20 instrument is being adjusted, perform Adjustment and Performance step A.

b. Perform Adjustment and Performance step B.

c. If an Option 13 instrument is being adjusted, perform Adjustment and Performance step C.

d. Perform Adjustment and Performance steps D1, D2, and D3.

e. If an Option 01 instrument is being adjusted, perform Adjustment and Performance step G.

f. Replace clear graticule with appropriate linear chart graticule for instrument being checked and adjusted. Refer to Table 6-2 for the part number.

g. As an aid to reduce parallax error, use a small tube to view the crt and linear chart graticule. Dimensions of the viewing tube should be: 1.5 to 2.5 inches long and 0.5 to 1.0 inches in diameter. Ensure that end of tube that contacts crt face/graticule is cut perpendicular to center axis of the tube.

h. **CHECK**-View display and verify that intersections of horizontal and vertical trace centerlines fall within outer diameters of linear chart graticule circles (refer to figure 6-1A).

i. If the instrument is severely out-of-adjustment preset adjustment controls as follows; otherwise continue with step j.

Control	Function	Board	Preset
R240	Vert Offset	Sync	Mid-range
R248	Vert Correction	Sync	Mid-range
R270	Horiz Offset	Sync	Mid-range
R278	Horiz Correction	Sync	Mid-range
R302	Orthogonality	Yoke Driver	Mid-range
R310	Vert Size	Yoke Driver	Rough size
R315	Vert Position	Yoke Driver	Center display
R340	Side Pincushion	Yoke Driver	Mid-range
R345	Horiz Size	Yoke Driver	Rough size
R355	Horiz Position	Yoke Driver	Center display
L364	Horiz Linearity	Yoke Driver	Max. display size

Effects of yoke, L364, R345, and R355 Controls.

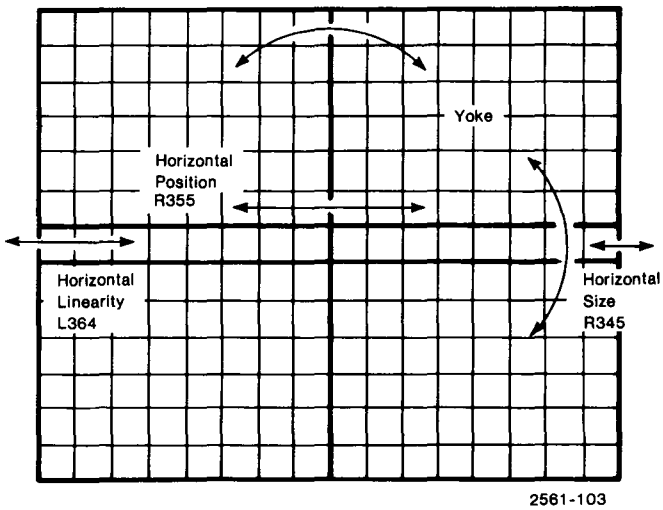

j. **ADJUST**-R355 (Horiz Pos) on Yoke Driver beard to align center vertical desplay line with two centermost circles of center column of linearity chart graticule.

k. **ADJUST**-R345 (Horiz Size) on Yoke Driver board to position center of rightmost vertical line beneath rightmost column of linearity chart circles.

l. **ADJUST**-L364 (Linearity) on Yoke Driver board to position center of leftmost vertical line beneath leftmost column of linearity chart circles.

m. Horizontal position, size, and linearity interact; therefore, repeat steps j, k, and l as necessary to obtain optimum display.

n. **ADJUST**-R302 (Orhtogonality) on Yoke Driver board so that center line falls beneath center column of circles of linearity chart graticule. For instruments that lack R302 observe two center horizontal lines. On these instruments rotate yoke so that all three lines (two horizontal and one vertical) fall beneath appropriate linearity chart circles.

NOTE

On early Option 15 instruments it may be necessary to readjust R375 (Horiz Hold) on Yoke driver board to correctly position display.

Effect of R302 and R340 Controls.

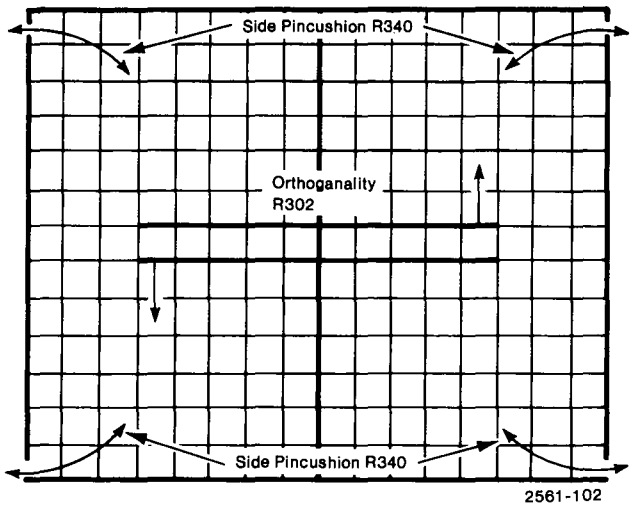

o. **ADJUST**-R340 (Side Pincushion) on Yoke Driver board so that outermost vertical lines are as straight as possible. These line may or may not fall beneath appropriate linearity chart circles at this tome because of keystoning, which will be eliminated in a later step.

p. Continue with Adjustment and Performance step D5.

D5. CHECK/ADJUST VERTICAL LINEARITY (R240, R248, R310, R315)

SETUP CONDITIONS

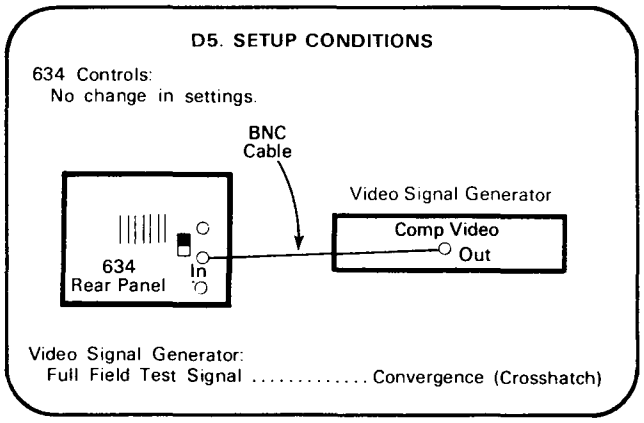

a. Perform Adjustment and Performance step D4.

Effects of R240 and R248 Controls.

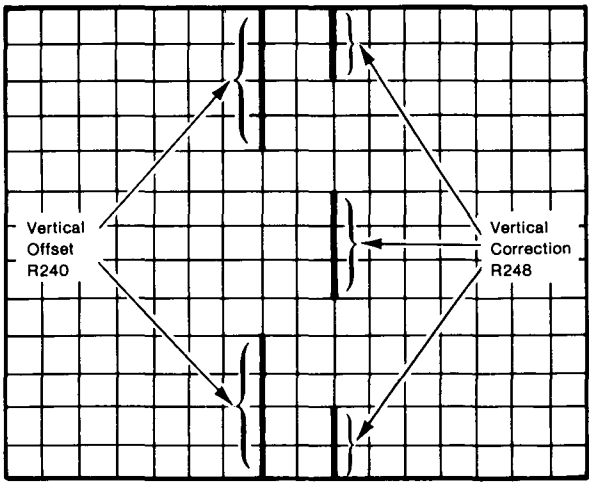

2561-104

NOTE

Steps b and c require that specified controls be adjusted together to obtain correct Adjustment.

b. **ADJUST**-R240 (Vert Offset) on Sync board and R315 (Vert Pos) on Yoke Driver board so that vertical gain at top of linearity chart is same as that at bottom of linearity chart. Note that horizontal lines should show symetical spacing above center and below center. Also note that linearity chart center may not appear linear at this time. At end of this step keystoning should be negligible.

Effects of R278 Control.

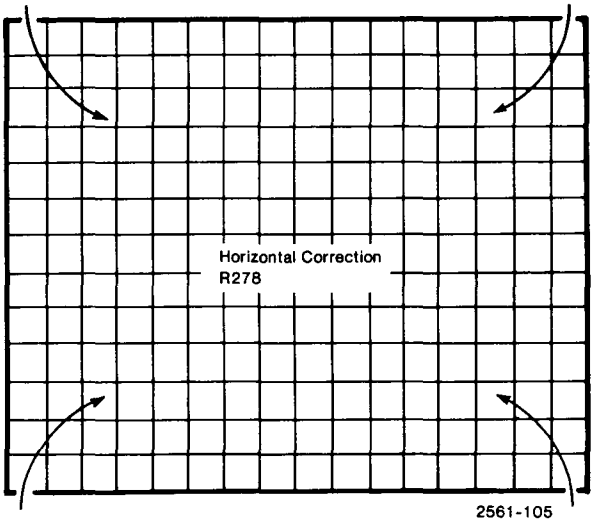

2561-105

c. **ADJUST**-R248 (Vert Correct) on Sync board and R310 (Vert Size) on Yoke Driver board so that gain at center of center vertical lines is same as gain at top and bottom of vertical lines. Readjust R315 (Vert Pos) on Yoke Driver board as necessary. At end of this step, center columns of crosshatches should be positioned beneath linear chart circles. A slight bow may now remain in lines displayed at top and bottom.

d. **ADJUST**-R278 (Horiz Correct) on Sync board to reduce bowing in lines at top and bottom of display. R278 tends to pull ends of display lines to center of display.

e. **ADJUST**-R270 (Horiz Offset) on Sync board to center horizontal correction. R270 affects phasing of correction signal so that effects of R278 (Horiz Correct) are uniform along horizontal lines.

f. Replace linearity chart graticule with clear graticule.

D6. CHECK/ADJUST OPTION 1 VERTICAL LINEARITY (R240, R248, R310, R315)

SETUP CONDITIONS

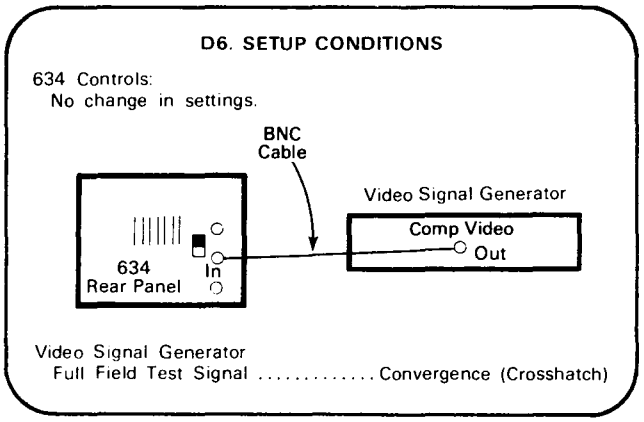

a. Replace clear crt graticule with Option 1 linearity chart graticule. Place scribed side of graticule against crt faceplate to reduce parallax.

b. **CHECK**—See Step D4, Part b.

c. **ADJUST**—Repeat Step D4, parts c through e as necessary.

D7. CHECK/ADJUST OPTION 1 HORIZONTAL LINEARITY (L364, R270, R278, R302, R340, R345, R355)

SETUP CONDITIONS

NOTE

If the preceding step was not performed, first refer to the Deflection Preliminary Control Settings, then proceed with the following instructions.

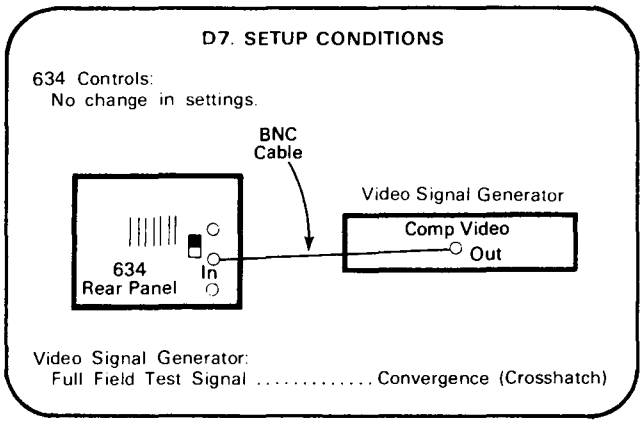

a. Replace clear graticule with Option 1 linearity chart graticule. Place scribed side of graticule against crt faceplate to reduce parallax.

b. **CHECK** — See Step D4, part h.

c. **ADJUST** — Repeat Step D4, parts a through g as necessary.

D8. ADJUST CORNER FOCUS (R35)

SETUP CONDITIONS

NOTE

If the preceding check was not performed, first refer to the Deflection Preliminary Control Settings, then proceed with the following instructions.

a. Set up a TEKTRONIX 465 oscilloscope (or equivalent) as follows:
   1. Set Channel 1 to DC coupling, use a 10X probe.
   2. Reference the center line to ground
   3. Set VOLTS/DIV to 50 V
   4. Set TIME/DIV to 2 ms
   5. Set TRIGGER MODE to AUTO
   6. Set trigger coupling to AC
   7. Set Trigger source to NORMAL

b. Connect the 10X probe to TP21 on the Interface board (See TEST POINT AND ADJUSTMENT LOCATIONS).

c. Set R35 (CORNER FOCUS ADJUST) completely clockwise.

d. Using the front panel focus control (R30), set the displayed focus DC volts to ground.

e. Adjust R35 for a 100 volt waveform.

f. Adjust R280 (Sync Separator board) so that the bottom of the focus waveform is at ground.

g. Reset R35 (clockwise).

h. Using the front panel focus control (R30), focus the corners for best definition and note the DC voltage of each corner. The voltage closest to + 100 volts is the DC voltage for the corners.

i. Using the front panel focus control, focus the center for best definition.

j. Adjust R35 so that the amplitude of the focus waveform is that of the difference between the DC center voltage (Step i) and the DC Corner voltage (Step h). See the diagram with this step.

k. Readjust the focus in the center, using the front panel focus control, and verify the correct waveform amplitude. Readjust R35 as necessary to maintain the voltage found in Step h.

Focus Waveform (Steps h and i).

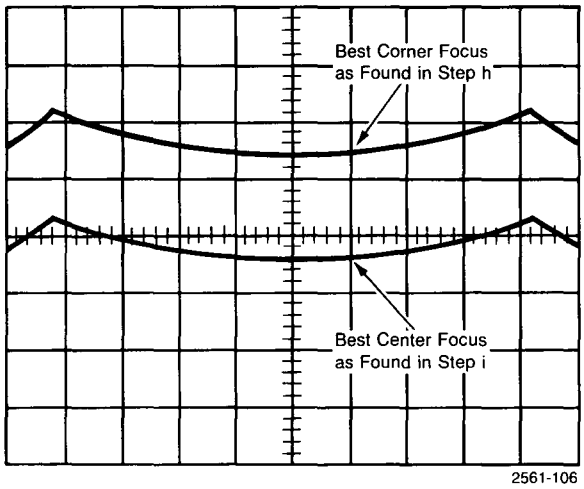

E. VIDEO AMPLITUDE

Equipment Required:

1. Video-signal generator
2. 75-ohm cable
3. Resistor

BEFORE YOU BEGIN:

(1) Perform the Admustment and Performance Check Power-Up Sequence. (Not necessary if continuing the Adjustment and Performance Check.)

(2) Refer to Section 7, Instrument Options, and the Change Information at the rear of this manual for any modifications which may affect this procedure.

(3) See the Test Point and Adjustment Locations foldout page in Section 9, Diagrams and Circuit Board illustrations.

VIDEO AMPLITUDE PRELIMINARY CONTROL SETTINGS

BRIGHTNESS . . . . . Visable display
CONTRAST . . . . . Visable display
FOCUS . . . . . Well-defined display
75 Ω TERMINATION . . . . . OFF

E1. CHECK AMPLITUDE

SETUP CONDITIONS

E1. SETUP CONDITIONS

634 Controls:
No change in settings.

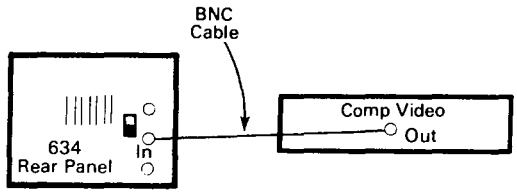

Video Signal Generator:
Full Field Test Signal . . . . . Window

a. **CHECK**-For stable raster.

b. Insert 16 Ω resistor between loop-through connector and ground.

c. **CHECK**-For stable raster.

F. OPTION 15 DEFLECTION

Equipment Required:

1. Linearity chart graticule
2. 75-ohm cable
3. High line rate video crosshatch signal generator.
4. Multimeter

BEFORE YOU BEGIN:

(1) Perform the Adjustment and Performance Check Power-Up Sequence. (Not necessary if continuing Adjustment and Performance Check.)

(2) Refer to Section 7, Instrument Options, and the Change Information at the rear of this manual for any modifications which may affect this procedure.

(3) See the Test Point and Adjustment Locations foldout page in Section 9, Diagrams and Circuit Board Illustrations.

OPTION 15 DEFLECTION PRELIMINARY CONTROL SETTINGS:

BRIGHTNESS ..... Visible display
CONTRAST..... Visible display
FOCUS ..... Well-defined display
75 Ω TERMINATION ..... ON

F1. ADJUST OPTION 15 VERTICAL RATE (R230)

NOTE

It may be necessary to change several components before Option 15 adjustment can be completed.

The 634 Option 15 instrument is factory adjusted for 1084/60 line rate. If the instrument is to be used at a different rate, it will need readjustment only for rates of 945 and 875; and component changes and adjustments for lower rates such as 729 and 675. The component changes are as follows:

1. Remove resistor R376 (8.66kΩ, 1%) and replace with a 10.0 kΩ, 1% resistor (Tektronix part number 321-0289-00 provided separately with the instrument). Refer to Option 15 Yoke Driver components for location of the component.

2. Install the 10 μF capacitor (Tektronix part number 285-1153-00 provided separately with the instrument) on the back of the yoke driver board, in parallel with the 5 μF capacitor (C364). There are additional mounting holes provided on the board for this purpose. Refer to Option 15 Yoke Driver components for location of the component.

3. Remove capacitor C253 (650 pF, 1%) and replace with a 1000 pF, 10% capacitor (Tektronix part number 281-0812-00 provided separately with the instrument). Refer to Option 15 Sync Separator components for location of the component. Proceed with the adjustment procedure.

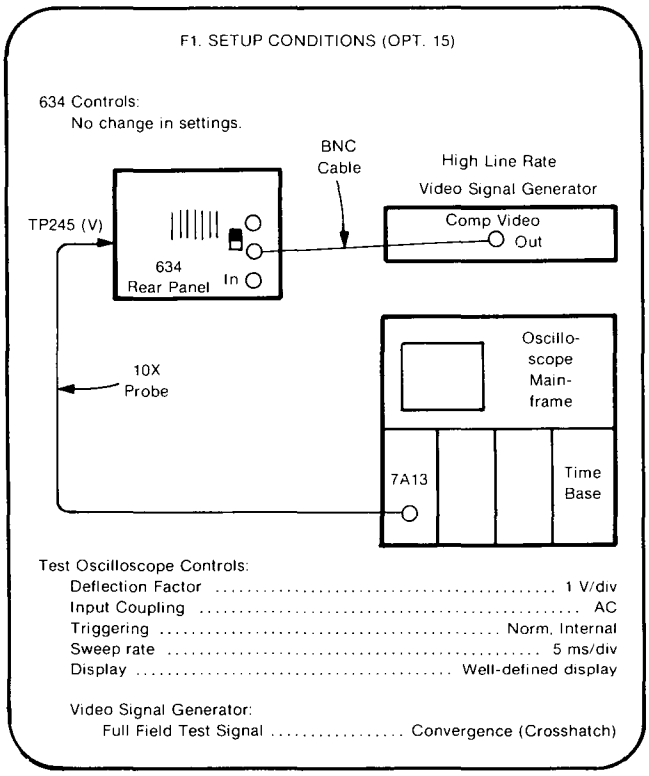

a. Set the high line rate video signal generator for the appropriate line rate.

b. **EXAMINE**—Test oscilloscope waveform for 7 volts p-p amplitude.

c. **ADJUST**—R230 (V Rate) on the Sync Separator board for 7 volts p-p amplitude.

F2. ADJUST OPTION 15 HORIZONTAL RATE (R260)

SETUP CONDITIONS

NOTE

If the preceding step was not performed, first refer to the Deflection Preliminary Control Settings, then proceed with the following instructions.

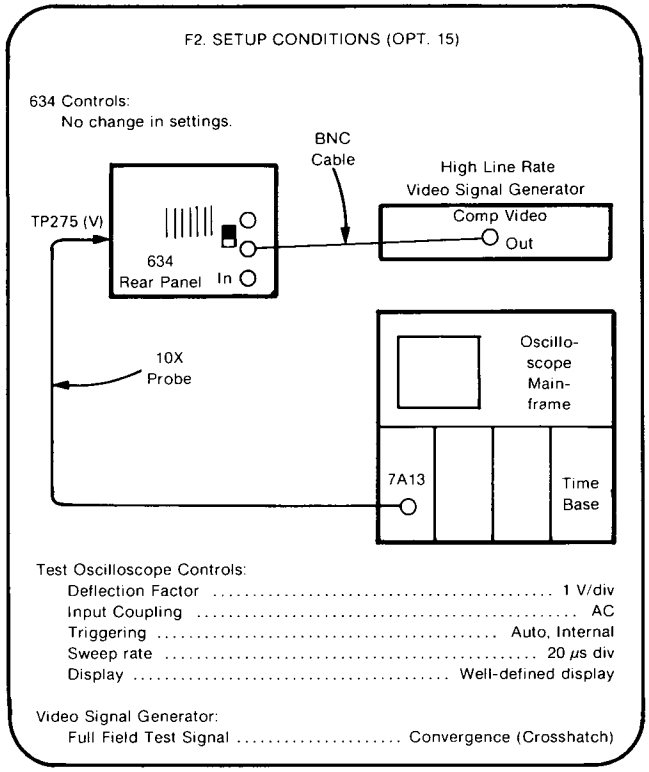

a. **CHECK**—That the video signal generator is set for the appropriate line rate.

b. **EXAMINE**—Test oscilloscope waveform for 7 volts p-p amplitude.

c. **ADJUST**—R260 (H Rate) on the Sync Separator board for 7 volts p-p amplitude.

F3. ADJUST OPTION 15 HORIZONTAL HOLD (R375)

SETUP CONDITIONS

NOTE

If the preceding step was not performed, first refer to the Deflection Preliminary Control Settings, then proceed with the following instructions.

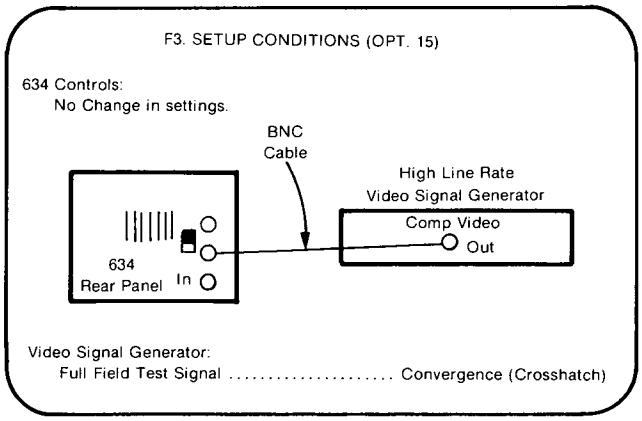

a. **EXAMINE**—Raster is horizontally stable.

b. **ADJUST**—R375 (H. Hold) on Yoke Driver board to midrange between horizontal lock-in limits.

b. **ADJUST**—R375 (Horizontal Hold) on Yoke Driver board to midrange between horizontal lock-in limits.

F4. CHECK/ADJUST OPTION 15 VERTICAL LINEARITY (R240, R248, R310, R315)

SETUP CONDITIONS

NOTE

If the preceding step was not performed, first refer to the Deflection Preliminary Control Settings, then proceed with the following instructions.

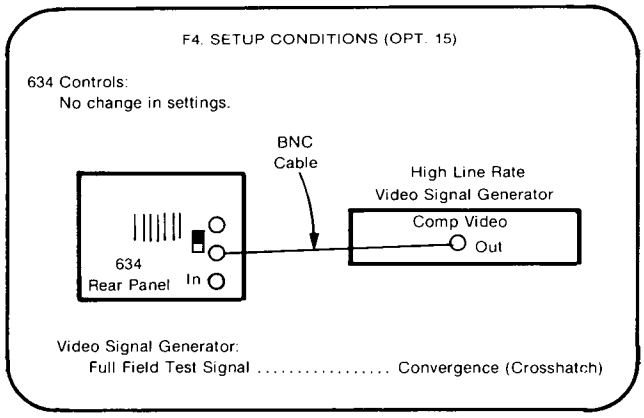

a. Replace clear graticule with linearity chart graticule. Place scribed side of graticule against crt faceplate to reduce parallax.

b. **CHECK**—Crosshatch pattern display is centered vertically with linearity chart graticule and horizontal crosshatch lines are within linearity chart graticule circles.

c. **ADJUST**—R315 (Vert Pos) on Yoke Driver board to center the two middle horizontal crosshatch lines on linearity chart graticule.

d. **ADJUST**—R240 (Vert Offset) on Sync Separator board alternately with R315 for an equal amount of vertical gain on each side of horizontal center line.

e. **ADJUST**—R248 (Vert Correct) on Sync Separator board and R310 (Vert Size) on Yoke Driver board until vertical crosshatch lines are aligned properly with linearity chart.

f. Interaction—It may be necessary to repeat part c to obtain best vertical linearity.

F5. CHECK/ADJUST OPTION 15 HORIZONTAL LINEARITY (L364, R270, R278, R340, R345, R355)

SETUP CONDITIONS

NOTE

If the preceding step was not performed, first refer to the Deflection Preliminary Control Settings, then proceed with the following instructions.

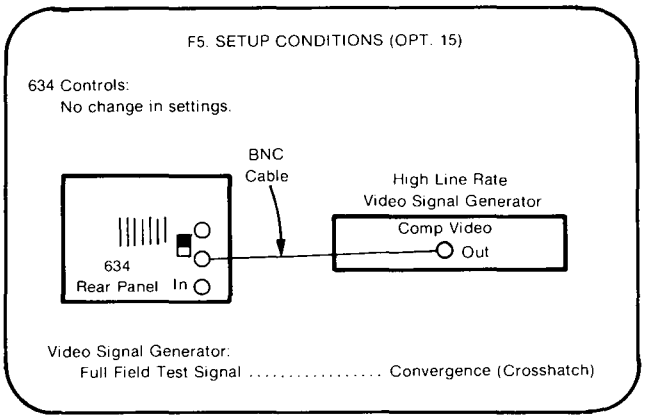

a. Replace clear graticule with linearity chart graticule. Place scribed side of graticule against crt faceplate to reduce parallax.

b. **CHECK**—Crosshatch pattern display is centered horizontally with linearity chart graticule and that vertical crosshatch lines are within linearity chart graticule circles.

c. **ADJUST**—R355 (H Pos) on Yoke Driver board to center the two middle vertical crosshatch lines on linearity chart graticule.

d. **ADJUST**—R345 (Horiz Size) on Yoke Driver board until lines to right of graticule center are aligned with linearity chart.

e. **ADJUST**—L364 (Linearity) on Yoke Driver board alternately with R345 until good horizontal linearity is achieved.

f. **ADJUST**—R278 (Horiz Correct) and R270 (Horiz Offset) on Sync Separator board until top and bottom horizontal lines are aligned with the linearity chart.

g. **ADJUST**—R340 (Side Pin) for best alignment between sides of crosshatch pattern and linearity chart.

h. Replace linearity chart graticule with clear graticule.

F6. ADJUST OPTION 15 CORNER FOCUS (R35)

SETUP CONDITIONS

NOTE

If the preceding check was not performed, first refer to the Deflection Preliminary Control Settings, then proceed with the following instructions.

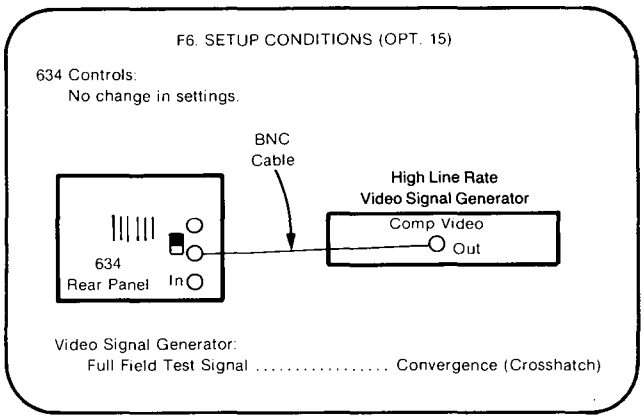

a. **EXAMINE**—Display is in focus and clearly defined.

b. **ADJUST**—R35 (Corner Focus) on Interface board and R30 (FOCUS control) alternately for best overall focus of display.

F7. CHECK/ADJUST OPTION 15 ORTHOGONALITY (R302)

NOTE

R302 not used in early instruments.

SETUP CONDITIONS

NOTE

If the preceding step was not performed, first refer to the Deflection Preliminary Control Settings, then proceed with the following instructions.

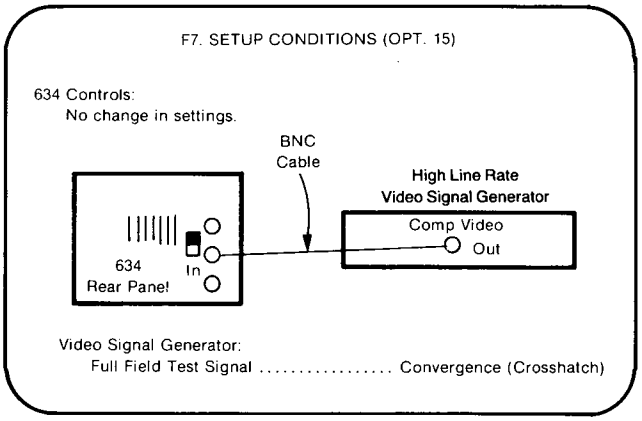

a. Replace clear graticule with linearity chart graticule. Place scribed side of graticule against crt faceplate to reduce parallax.

b. **CHECK**—Crosshatch pattern display is centered horizontally and vertically with linearity chart graticule; horizontal lines are perpendicular to vertical lines, within the accuracy of the chart graticule circles.

c. **ADJUST**—R302 (Ortho) until the horizontal lines are perpendicular to vertical lines within the accuracy of the chart graticule circles.

F8. CHECK/ADJUST OPTION 15 HIGH VOLTAGE CURRENT LIMIT

SETUP CONDITIONS

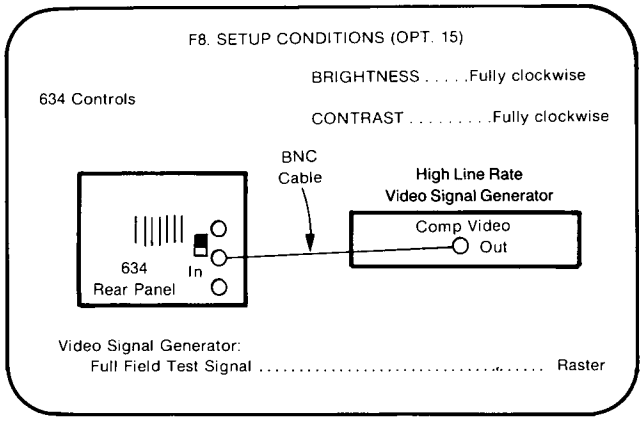

a. Obtain a display with full brightness and a full contrast raster using a full white, flat field from the video signal generator.

b. Press the POWER switch to turn the monitor off.

c. Remove the high-voltage oscillator fuse F406 from the fuse holder. Connect the multimeter, set for measuring dc current up to 2 amperes, across the fuse holder posts. Pull the POWER switch to the out position (PULL ON).

d. **CHECK**—Multimeter for a reading of no more than 900 mA.

e. **ADJUST**—R812 (Current Limit) for a meter reading of 900 mA or below.

f. Press the POWER switch to turn the monitor off. Disconnect the multimeter and install the fuse.

g. Pull the POWER switch to the out position (PULL ON). Set the BRIGHTNESS and CONTRAST controls for a typical display level.

G. OPTION 1 YOKE

Equipment Required:

1. Option 1 Linearity chart graticule

BEFORE YOU BEGIN:

(1) Perform the Adjustment and Performace Check Power-Up Sequence. (Not necessary if continuing Adjustment and Performance Check.)

(2) Refer to Section 7, Instrument Options, and the Change Information at the rear of this manual for any modifications which may affect this procedure.

OPTION 1 YOKE PRELIMINARY CONTROL SETTING:

BRIGHTNESS ..... minimum
CONTRAST ..... minimum
FOCUS ..... fully clockwise

G1. ADJUST OPTION 1 YOKE

a. Perform Adjustment and Performance step B.

b. Perform Adjustment and Performance steps D1, D2, and D3.

c. Mount a viewing hood to reduce possibility of crt damage.

d. Replace clear graticule with Option 1 linearity chart graticule. Refer to table 6-2 for part number.

e. Turn power off and disconnect deflection yoke from Yoke Driver board at J335. Dress cable connector housing (harmonica) away from chassis and board components. Yoke will develop charge during adjustment procedure and may arc if connector is not dressed away from J335 and/or board components.

f. Turn on power and carefully increase BRIGHTNESS control until a very dim spot is seen on crt.

g. **ADJUST**-yoke ring magnets to place dot within one centimeter square at center of linearity chart graticule. To increase deflection, bring tabs closer together. To reduce deflection, seperate tabs.

h. Turn off instrument and remove viewing hood.

i. Discharge yoke by bringing connector J335 close to chassis. Avoid touching J335 with fingers until discharge occurs, then reconnect J335 to Yoke Driver board.

j. Replace linearity chart graticule with clear graticule.

INSTRUMENT OPTIONS

Your instrument may be equipped with one or more instrument options. A brief description of each available option is given in the following discussion. Refer to Table 7-1 for location of option information. For further information on options, see your Tektronix Catalog or contact your Tektronix Field Office.

OPTION 01

Replaces the standard crt with a reduced resolution crt. Not compatible with Options 14 and 15.

OPTION 06

Listed as Professional Medical Equipment by Underwriters Laboratories, Inc. Modifications include warnings appropriate for medical equipment, a hospital grade cord and plug cap, a line fuse inaccessable for operator servicing, and protective panels. (Cannot be ordered with Option 20).

OPTION 09

Certified as a recognized component, Professional Medical Equipment, by Underwriters Laboratories, Inc.

OPTION 11

Additional BNC connector on rear panel allows input of external sync signal (internally switchable).

OPTION 13

Reverse video signal (from positive to negative picture) with switch on front-panel board, or 0 V TTL level input on a remote line from the front-panel board.

OPTION 14

Modifies the Video Amplifier to increase the video bandwidth to 20 MHz.

OPTION 15

The horizontal may be adjusted for sweep frequencies of 20,250 to 32,520 ramps/second, allowing display formats of up to 1084/60.

OPTION 16

Multi-pin connector on rear panel provides for remote control of the BRIGHTNESS, CONTRAST, and FOCUS controls; a video-reverse switch (Option 13 only), and remote inputs for the video, external sync (Option 11 only), and TTL unblanking signals.

OPTION 17

The front-panel CONTRAST, BRIGHTNESS, and FOCUS controls are repositioned to provide access from the top of the instrument. Not available with Options 06, 23, or 28.

OPTION 20

Deletes power transformer and regulators. Requires 3 external dc supplies (+23 V, −22 V, and +9 V unregulated).

OPTION 23

Includes handles, feet, and protective covers (not available with Option 20).

OPTION 28

Provides protective covers only (not available with Options 06 or 20).

OPTION 74

Uses P4 phosphor in the crt.

TABLE 7-1

Option Information Locator

Instrument Option	Manual Section	Location of Information
Option 01 (Reduced Resolution CRT)	1 General Information	Specification Table 1-1 contains the linearity specifications.
	6 Calibration	Part I—Performance Check Contains procedures for checking the Option 01 Monitor.
		Part II—Adjustment and Performance Check Contains procedures for checking and adjusting the Option 01 Monitor.
	7 Instrument Options	Instrument Options Provides a brief description of of Option 01.
	8 Replaceable Electrical Parts	Lists replacement information for the Option 01 crt.
	10 Replaceable Mechanical Parts	Instrument Options Provides an illustration and replacement information for the Option 01 graticule.
Option 06 (Listed as Professional Medical Equipment by Underwriters Laboratories, Inc.)	1 General Information	Specification Table 1-3 contains physical characteristics of the Option 06 Monitor.
	7 Instrument Options	Instrument Options Includes a brief description of the UL listed Monitor.
Option 09 (Certified as a recognized component, Professional Medical Equipment, by Underwriters Laboratories, Inc.)	7 Instrument Options	Instrument Options All information is contained in this section.
Option 11 (External sync input connector)	2 Operating Instructions	Controls and Connectors Figure 2-2 depicts and describes the Ext Sync input connector for the standard Monitor, and Figure 2-3 for the Option 20 Monitor.
	3 Installation	External Sync (Option 11 Only) Provides a brief description of the Option 11 operation.
	4 Theory of Operation	External Sync (Option 11) Provides a brief circuit description of the Option 11 Monitor.
	7 Instrument Options	Instrument Options Includes a brief description of the Ext Sync function.

TABLE 7-1 (CONT.)

Option Information Locator

Instrument Option	Manual Section	Location of Information
Option 11 (Cont.)	8 Replaceable Electrical Parts	Provides an electrical parts list for the Option 11 Monitor.
	9 Diagrams and Circuit Board Illustrations	Option 11 circuit is shown on schematic diagrams 1 and 8.
	10 Replaceable Mechanical Parts	Instrument Options Provides an illustration of the Option 11 BNC connector and replacement information.
Option 13 (Reverse video signal)	4 Theory of Operation	Video Reversal (Option 13) Provides circuit description of the Option 13 Monitor.
	5 Maintenance	Component Removal and Replacement Provides a procedure for removal and replacement of the Option 13 Front Panel Board.
	6 Calibration	Part II—Adjustment and Performance Check Contains procedures for adjusting the Option 13 Monitor.
	7 Instrument Options	Instrument Options Provides a brief description of the Option 13 Monitor.
	8 Replaceable Electrical Parts	Provides an electrical parts list for the Option 13 Monitor.
	9 Diagrams and Circuit Board Illustrations	Option 13 circuit is shown on diagram 7.
	10 Replaceable Mechanical Parts	Instrument Options Provides a mechanical illustration and replacement information for Option 13.
Option 14 (20 MHz video amplifier bandwidth)	1 General Information	Specification Table 1-1 contains the bandwidth specifications. Table 1-2 contains the temperature specifications.

TABLE 7-1 (CONT.)

Option Information Locator

Instrument Option	Manual Section	Location of Information
Option 14 (cont)	6 Calibration	Part I—Performance Check contains procedures for checking the Option 14 bandwidth. Part II—Adjustment and Performance Check Contains procedures for adjusting the Option 14 bandwidth.
	7 Instrument Options	Instrument Options Provides a brief description of Option 14.
	8 Replaceable Electrical Parts	Provides an electrical parts list for the Option 14 Monitor.
	9 Diagrams and Circuit Board Illustrations	Option 14 Video Amplifier is shown on diagram 10.
	10 Replaceable Mechanical Parts	Provides a mechanical illustration and replacement information for Option 14.
Option 15 (Adjustable horizontal for sweep frequencies of 20,250 to 32,520 ramps/second, allowing display formats up to 1084/60.)	1 General Information	Specification Table 1-1 contains the vertical and horizontal sweep rate specifications. Table 1-2 contains the temperature specifications.
	6 Calibration	Part I—Performance Check Contains procedures for checking the Option 15 vertical and horizontal linearity. Part II—Adjustment and Performance Check Contains procedures for checking and adjusting the Option 15 vertical and horizontal display.
	7 Instrument Options	Instrument Options Provides a brief description of Option 15.
	8 Replaceable Electrical Parts	Provides an electrical parts list for the Option 15 Monitor.
	9 Diagrams and Circuit Board Illustrations	Option 15 circuitry is shown on diagrams 11, 12, and 13.
	10 Replaceable Mechanical Parts.	Provides a mechanical illustration and replacement information for Option 15.

TABLE 7-1 (CONT.)

Option Information Locator

Instrument Option	Manual Section	Location of Information
Option 16 (A14, 670-6806-00) (Multi-pin Connector on rear panel for remote control)	2 Operating Instructions	Controls and Connectors Figure 2-2 and 2-3 depicts and describes the Remote Program (Option 16) connector.
	5 Maintenance	Component Removal and Replacement Provides a procedure for removal replacement of the Option 16 Front Panel Board.
	7 Instrument Options	Instrument Options Provides a brief description of Option 16.
	9 Diagrams and Circuit Board Illustrations	The Option 16 wiring connections are shown on diagram 9.
	10 Replaceable Mechanical Parts	Provides a mechanical illustration and replacement information for Option 16.
Option 17 (A15, 670-6807-00) (Front-panel CONTRAST, BRIGHTNESS, and FOCUS controls repositioned to provide access from top of Monitor)	7 Instrument Options	All information is contained in this section.
Option 20 (Deletes power transformer and regulator)	1 General Information	Specification Table 1-1 contains the power source information for the Option 20 Monitor. Table 1-3 contains the physical characteristics of the Option 20 Monitoı Figure 1-2 provides a dimensional drawing of the Option 20 Monitor.
	2 Operating Instructions	Controls and Connectors Figure 2-3 depicts and describes the rear panel controls and connectors for the Option 20 Monitor.
	3 Installation	Operating Power Information Provides power requirements for the Option 20 Monitor. Figure 3-3 illustrates location and of Option 20 input fuses.
	4 Theory of Operation	Low Voltage Power Supply (Option 20, diagram 8) Provides circuit description of the Option 20 Monitor.

TABLE 7-1 (CONT.)

Option Information Locator

Instrument Option	Manual Section	Location of Information
Option 20 (Cont.)	6 Calibration	Part I—Performance Check Contains procedures for checking the Option 20 Monitor.
		Part II—Adjustment and Performance Check Contains procedures for checking the Option 20 Monitor.
	7 Instrument Options	Instrument Options Provides a brief description of Option 20.
	8 Replaceable Electrical Parts	Provides an electrical parts list for the Option 20 Monitor.
	9 Diagrams and Circuit Board Illustrations	Option 20 Low Voltage Power Supply circuit is shown on diagram 8.
	10 Replaceable Mechanical Parts	Provides a mechanical illustration and Option 20 Monitor.
Option 23 (Includes handles, feet, and protective covers)	1 General Information	Specification Provides physical characteristics of the Option 23 Monitor.
	7 Instrument Options	Instrument Options Provides a brief description of Option 23.
	10 Replaceable Mechanical Parts	Provides a mechanical illustration and replacement information for the Option 16.
Option 28 (Provides protective covers only)	1 General Information	Specification Table 1-3 contains the weight of the Option 28 Monitor.
	7 Instrument Options	Instrument Options Provides a brief description of Option 28.
	10 Replaceable Electrical Parts	Provides a mechanical illustration and replacement information for Option 16.
Option 74 (P4 phosphor)	7 Instrument Options	Instrument Options Provides a brief description of Option 74.
	8 Replaceable Electrical Parts	Lists replacement information for the Option 74 crt.

REPLACEABLE ELECTRICAL PARTS

PARTS ORDERING INFORMATION

Replacement parts are available from or through your local Tektronix, Inc. Field Office or representative.

Changes to Tektronix instruments are sometimes made to accommodate improved components as they become available, and to give you the benefit of the latest circuit improvements developed in our engineering department. It is therefore important, when ordering parts, to include the following information in your order: Part number, instrument type or number, serial number, and modification number if applicable.

If a part you have ordered has been replaced with a new or improved part, your local Tektronix, Inc. Field Office or representative will contact you concerning any change in part number.

Change information, if any, is located at the rear of this manual.

SPECIAL NOTES AND SYMBOLS

X000	Part first added at this serial number
00X	Part removed after this serial number

ITEM NAME

In the Parts List, an Item Name is separated from the description by a colon (:). Because of space limitations, an Item Name may sometimes appear as incomplete. For further Item Name identification, the U.S. Federal Cataloging Handbook H6-1 can be utilized where possible.

ABBREVIATIONS

ACTR	ACTUATOR	PLSTC	PLASTIC
ASSY	ASSEMBLY	QTZ	QUARTZ
CAP	CAPACITOR	RECP	RECEPTACLE
CER	CERAMIC	RES	RESISTOR
CKT	CIRCUIT	RF	RADIO FREQUENCY
COMP	COMPOSITION	SEL	SELECTED
CONN	CONNECTOR	SEMICOND	SEMICONDUCTOR
ELCTLT	ELECTROLYTIC	SENS	SENSITIVE
ELEC	ELECTRICAL	VAR	VARIABLE
INCAND	INCANDESCENT	WW	WIREWOUND
LED	LIGHT EMITTING DIODE	XFMR	TRANSFORMER
NONWIR	NON WIREWOUND	XTAL	CRYSTAL

CROSS INDEX - MFR. CODE NUMBER TO MANUFACTURER

Mfr. Code	Manufacturer	Address	City, State, Zip Code
00853	SANGAMO WESTON INC COMPONENTS DIV	SANGAMO RD PO BOX 128	PICKENS SC 29671-9716
01121	ALLEN-BRADLEY CO	1201 SOUTH 2ND ST	MILWAUKEE WI 53204-2410
01295	TEXAS INSTRUMENTS INC SEMICONDUCTOR GROUP	13500 N CENTRAL EXP PO BOX 655012	DALLAS TX 75265
01963	CHERRY ELECTRICAL PRODUCTS CORP	3600 SUNSET AVE	WAUKEGAN IL 60087-3214
02113	COILCRAFT INC	1102 SILVER LAKE RD	CARY IL 60013-1658
02114	AMPEREX ELECTRONIC CORP FERROXCUBE DIV	5083 KINGS HWY	SAUGERTIES NY 12477
02735	RCA CORP SOLID STATE DIVISION	ROUTE 202	SOMERVILLE NJ 08876
03508	GENERAL ELECTRIC CO SEMI-CONDUCTOR PRODUCTS DEPT	W GENESEE ST	AUBURN NY 13021
04009	COOPER INDUSTRIES INC ARROW HART DIV	103 HAWTHORN ST	HARTFORD CT 06101
04222	AVX CERAMICS DIV OF AVX CORP	19TH AVE SOUTH P O BOX 867	MYRTLE BEACH SC 29577
04713	MOTOROLA INC SEMICONDUCTOR PRODUCTS SECTOR	5005 E MCDOWELL RD	PHOENIX AZ 85008-4229
05397	UNION CARBIDE CORP MATERIALS SYSTEMS DIV	11901 MADISON AVE	CLEVELAND OH 44101
05828	GENERAL INSTRUMENT CORP GOVERNMENT SYSTEMS DIV	600 W JOHN ST	HICKSVILLE NY 11802
07263	FAIRCHILD SEMICONDUCTOR CORP NORTH AMERICAN SALES SUB OF SCHLUMBERGER LTD MS 118	10400 RIDGEVIEW CT	CUPERTINO CAW CA 95014
07716	TRW INC TRW IRC FIXED RESISTORS/BURLINGTON	2850 MT PLEASANT AVE	BURLINGTON IA 52601
12954	MICROSEMI CORP - SCOTTSDALE	8700 E THOMAS RD P O BOX 1390	SCOTTSDALE AZ 85252
12969	UNITRODE CORP	5 FORBES RD	LEXINGTON MA 02173-7305
13511	AMPHENOL CADRE DIV BUNKER RAMO CORP		LOS GATOS CA
14099	SEMTECH CORP	652 MITCHELL ROAD	NEWBURY PARK CA 91320-2211
14433	ITT SEMICONDUCTORS DIV		WEST PALM BEACH FL
14552	MICROSEMI CROP	2830 S FAIRVIEW ST	SANTA ANA CA 92704-5948
14752	ELECTRO CUBE INC	1710 S DEL MAR AVE	SAN GABRIEL CA 91776-3825
14936	GENERAL INSTRUMENT CORP DISCRETE SEMI CONDUCTOR DIV	600 W JOHN ST	HICKSVILLE NY 11802
19396	ILLINOIS TOOL WORKS INC PAKTRON DIVISION	1205 MCCONVILLE RD PO BOX 4539	LYNCHBURG VA 24502-4535
19701	MEPCO/CENTRALAB A NORTH AMERICAN PHILIPS CO	P O BOX 760	MINERAL WELLS TX 76067-0760
24546	CORNING GLASS WORKS	550 HIGH ST	BRADFORD PA 16701-3737
26769	MEPCO/CENTRALAB A NORTH AMERICAN PHILIPS CO	5900 AUSTRALIAN AVE	WEST PALM BEACH FL 33407-2330
32997	BOURNS INC TRIMPOT DIV	1200 COLUMBIA AVE	RIVERSIDE CA 92507-2114
33095	SPECTRUM CONTROL INC	2185 WEIGHT ST	ERIE PA 16505
50434	HEWLETT-PACKARD CO OPTOELECTRONICS DIV	370 W TRIMBLE RD	SAN JOSE CA 95131
50558	ELECTRONIC CONCEPTS INC	526 INDUSTRIAL WAY WEST	EATONTOWN NJ 07724-2212
50783	PENN-TRAN CORP	ROUTE 144 NORTH PO BOX 1321	WINGATE PA 16880
51406	MURATA ERIE NORTH AMERICA INC GEORGIA OPERATIONS	2200 LAKE PARK DR	SMYRNA GA 30080
52306	UNITRODE CORP HIGH VOLTAGE DEVICES INC		VISALIA CA
52763	STETTNER ELECTRONICS INC	6135 AIRWAYS BLVD PO BOX 21947	CHATTANOOGA TN 37421-2970
54473	MATSUSHITA ELECTRIC CORP OF AMERICA	ONE PANASONIC WAY PO BOX 1501	SECAUCUS NJ 07094-2917
56289	SPRAGUE ELECTRIC CO WORLD HEADQUARTERS	92 HAYDEN AVE	LEXINGTON MA 02173-7929
57668	R-OHM CORP	16931 MILLIKEN AVE	IRVINE CA 92713
58756	CTS CORP	1142 W BEARDSLEY AVE	ELKHART IN 46514-2224

CROSS INDEX - MFR. CODE NUMBER TO MANUFACTURER

Mfr. Code	Manufacturer	Address	City, State, Zip Code
59660	TUSONIX INC	7741 N BUSINESS PARK DR PO BOX 37144	TUCSON AZ 85740-7144
59821	MEPCO/CENTRALAB A NORTH AMERICAN PHILIPS CO	7158 MERCHANT AVE	EL PASO TX 79915-1207
71400	BUSSMANN DIV OF COOPER INDUSTRIES INC	114 OLD STATE RD PO BOX 14460	ST LOUIS MO 63178
71590	MEPCO/CENTRALAB INC A NORTH AMERICAN PHILIPS CO	HWY 20 W P O BOX 858	FORT DODGE IA 50501
75042	TRW INC TRW ELECTRONIC COMPONENTS IRC FIXED RESISTORS PHILADELPHIA DIV	401 N BROAD ST	PHILADELPHIA PA 19108-1001
80009	TEKTRONIX INC	14150 SW KARL BRAUM DR PO BOX 500 MS 53-111	BEAVERTON OR 97077
82389	SWITCHCRAFT INC SUB OF RAYTHEON CO	5555 N ELSTRON AVE	CHICAGO IL 60630-1314
93410	ESSIX GROUP ING CONTROLS DIV LEXINGTON PLANT	45-55 PLYMOUTH ST P O BOX 1007	LEXINGTON OH 44904
99409	SYNTRONIC INSTRUMENTS INC	100 INDUSTRIAL	ADDISON IL 69101-4508

Component No.	Tektronix Part No.	Serial/Assembly No. Effective	Dscont	Name & Description	Mfr. Code	Mfr. Part No.
A1	670-5597-00	B010100	B020752	CIRCUIT BD ASSY:FRONT PANEL CONTROL	80009	670-5597-00
A1	670-5597-01	B020753		CIRCUIT BD ASSY:FRONT PANEL CONTROL	80009	670-5597-01
A2	670-5596-00	B010100	B032299	CIRCUIT BD ASSY:SYNC SEPARATOR	80009	670-5596-00
A2	670-5596-01	B032300	B039999	CIRCUIT BD ASSY:SYNC SEPARATOR	80009	670-5596-01
A2	670-5596-02	B040000	B059698	CIRCUIT BD ASSY:SYNC SEPARATOR	80009	670-5596-02
A2	670-5596-03	B059699		CIRCUIT BD ASSY:SYNC SEPARATOR	80009	670-5596-03
A3	670-5594-00	B010100	B019999	CIRCUIT BD ASSY:YOKE DRIVE	80009	670-5594-00
A3	670-5594-02	B020000	B032450	CIRCUIT BD ASSY:YOKE DRIVE	80009	670-5594-02
A3	670-5594-03	B032451	B039999	CIRCUIT BD ASSY:YOKE DRIVE	80009	670-5594-03
A3	670-5594-04	B040000	B049597	CIRCUIT BD ASSY:YOKE DRIVE	80009	670-5594-04
A3	670-5594-05	B049598	B060358	CIRCUIT BD ASSY:YOKE DRIVE	80009	670-5594-05
A3	670-5594-06	B060359		CIRCUIT BD ASSY:YOKE DRIVE	80009	670-5594-06
A4	670-5593-00	B010100	B019999	CIRCUIT BD ASSY:HIGH VOLTAGE	80009	670-5593-00
A4	670-5593-01	B020000	B039999	CIRCUIT BD ASSY:HIGH VOLTAGE	80009	670-5593-01
A4	670-5593-03	B040000	B059698	CIRCUIT BD ASSY:HIGH VOLTAGE	80009	670-5593-03
A4	670-5593-04	B059699	B071365	CIRCUIT BD ASSY:HIGH VOLTAGE	80009	670-5593-04
A4	670-5593-05	B071366	B071999	CIRCUIT BD ASSY:HV	80009	670-5593-05
A4	672-0233-00	B072000		CIRCUIT BD ASSY:634 HV W/CURRENT LIMIT	80009	672-0233-00
A4A1	670-6295-00	B072000		CIRCUIT BD ASSY:CURRENT LIMITER	80009	670-6295-00
A5	670-5595-00	B010100	B010666	CIRCUIT BD ASSY:POWER SUPPLY	80009	670-5595-00
A5	670-5595-01	B010667	B032450	CIRCUIT BD ASSY:POWER SUPPLY	80009	670-5595-01
A5	670-5595-02	B032451		CIRCUIT BD ASSY:POWER SUPPLY	80009	670-5595-02
A6	670-5592-00	B010100	B010229	CIRCUIT BD ASSY:INTERFACE	80009	670-5592-00
A6	670-5592-01	B010230	B010820	CIRCUIT BD ASSY:INTERFACE	80009	670-5592-01
A6	670-5592-02	B010821	B019999	CIRCUIT BD ASSY:INTERFACE	80009	670-5592-02
A6	670-5592-03	B020000	B039999	CIRCUIT BD ASSY:INTERFACE	80009	670-5592-03
A6	670-5592-04	B040000	B071749	CIRCUIT BD ASSY:INTERFACE	80009	670-5592-04
A6	670-5592-05	B071750		CIRCUIT BD ASSY:INTERFACE	80009	670-5592-05
A7	670-5691-00	B010100	B046188	CIRCUIT BD ASSY:POWER SUPPLY (OPTION 20 ONLY)	80009	670-5691-00
A7	670-5691-01	B046189	B071319	CIRCUIT BD ASSY:POWER SUPPLY (OPTION 20 ONLY)	80009	670-5691-01
A7	670-5691-02	B071320		CIRCUIT BD ASSY:PWR SPLY (OPTION 20 ONLY)	80009	670-5691-02
A8	670-5888-00			CIRCUIT BD ASSY:FRONT PANEL CONTROL (OPTION 13 ONLY)	80009	670-5888-00
A9	670-5965-00	B010100	B019999	CIRCUIT BD ASSY:INTERFACE (OPTION 14 ONLY)	80009	670-5965-00
A9	670-5965-01	B020000	B039999	CIRCUIT BD ASSY:INTFC (OPTION 14 ONLY)	80009	670-5965-01
A9	670-5965-02	B040000		CIRCUIT BD ASSY:INTFC (OPTION 14 ONLY)	80009	670-5965-02
A10	670-6123-00	B010100	B032299	CIRCUIT BD ASSY:SYNC SEPARATOR (OPTION 15 ONLY)	80009	670-6123-00
A10	670-6123-01	B032300	B059698	CIRCUIT BD ASSY:SYNC SEPARATOR (OPTION 15 ONLY)	80009	670-6123-01
A10	670-6123-02	B059699	B071610	CIRCUIT BD ASSY:SYNC SEPARATOR (OPTION 15 ONLY)	80009	670-6123-02
A10	670-6123-03	B071611		CIRCUIT BD ASSY:SYNC SEPARATOR (OPTION 15 ONLY)	80009	670-6123-03
A11	670-6122-00	B010100	B019999	CIRCUIT BD ASSY:YOKE (OPTION 15 ONLY)	80009	670-6122-00
A11	670-6122-01	B020000	B032450	CIRCUIT BD ASSY:YOKE (OPTION 15 ONLY)	80009	670-6122-01
A11	670-6122-02	B032451	B039999	CIRCUIT BD ASSY:YOKE (OPTION 15 ONLY)	80009	670-6122-02
A11	670-6122-03	B040000	B047999	CIRCUIT BD ASSY:YOKE (OPTION 15 ONLY)	80009	670-6122-03
A11	670-6122-04	B048000	B059698	CIRCUIT BD ASSY:YOKE (OPTION 15 ONLY)	80009	670-6122-04
A11	670-6122-05	B059699	B060358	CIRCUIT BD ASSY:YOKE (OPTION 15 ONLLY)	80009	670-6122-05

Component No.	Tektronix Part No.	Serial/Assembly No. Effective	Dscont	Name & Description	Mfr. Code	Mfr. Part No.
A11	670-6122-06	B060359	B071610	CIRCUIT BD ASSY:YOKE (OPTION 15 ONLY)	80009	670-6122-06
A11	670-6122-07	B071611		CIRCUIT BD ASSY:YOKE (OPTION 15 ONLY)	80009	670-6122-07
A12	670-6295-00	B010100	B071999	CIRCUIT BD ASSY:CURRENT LIMITER (OPTION 15 ONLY)	80009	670-6295-00
A13	670-6403-00	B010100	B019999	CIRCUIT BD ASSY:HV (OPTION 15 ONLY)	80009	670-6403-00
A13	670-6403-01	B020000	B039999	CIRCUIT BD ASSY:HV (OPTION 15 ONLY)	80009	670-6403-01
A13	670-6403-02	B040000	B059698	CIRCUIT BD ASSY:HV (OPTION 15 ONLY)	80009	670-6403-02
A13	670-6403-03	B059699	B071365	CIRCUIT BD ASSY:HV (OPTION 15 ONLY)	80009	670-6403-03
A13	670-6403-04	B071366	B071999	CIRCUIT BD ASSY:HV (OPTION 15 ONLY)	80009	670-6403-04
A14	670-6806-00	B031600		CIRCUIT BD ASSY:CONTROL (OPTION 16 ONLY)	80009	670-6806-00
A15	670-6807-00	B031600		CIRCUIT BD ASSY:CONTROL (OPTION 17 ONLY)	80009	670-6807-00
A16	670-7004-00	B031250	B032450	CIRCUIT BD ASSY:YOKE DRIVE (OPTION 20 ONLY)	80009	670-7004-00
C11	285-1082-00			CAP,FXD,PLASTIC:0.47UF,20%,200V	04009	TEK33MMR.47
C12	285-1082-00			CAP,FXD,PLASTIC:0.47UF,20%,200V	04009	TEK33MMR.47
C13	283-0003-00			CAP,FXD,CER DI:0.01UF,+80-20%,150V	59821	D103Z40Z5UJDCEX
C19	283-0341-00			CAP,FXD,CER DI:0.047UF,10%,100V	04222	SR301C473KAA
C21	283-0003-00			CAP,FXD,CER DI:0.01UF,+80-20%,150V	59821	D103Z40Z5UJDCEX
C25	281-0759-00	B040000		CAP,FXD,CER DI:22PF,10%,100V	04222	MA101A220KAA
C27	281-0510-00			CAP,FXD,CER DI:22PF,+/-4.4PF,500V	52763	2RDPLZ007 22POMC
C31	283-0111-00			CAP,FXD,CER DI:0.1UF,20%,50V	05397	C330C104M5U1CA
C54	283-0000-00			CAP,FXD,CER DI:0.001UF,+100-0%,500V	59660	831-610-Y5U0102P
C56	283-0003-00			CAP,FXD,CER DI:0.01UF,+80-20%,150V	59821	D103Z40Z5UJDCEX
C58	283-0341-00			CAP,FXD,CER DI:0.047UF,10%,100V	04222	SR301C473KAA
C62	290-0512-00			CAP,FXD,ELCTLT:22UF,20%,15V	05397	T368B226M015AS
C72	290-0415-00			CAP,FXD,ELCTLT:5.6UF,10%,35V	12954	ST513B565K035
C73	290-0415-00			CAP,FXD,ELCTLT:5.6UF,10%,35V	12954	ST513B565K035
C89	283-0003-00			CAP,FXD,CER DI:0.01UF,+80-20%,150V	59821	D103Z40Z5UJDCEX
C93	283-0111-00			CAP,FXD,CER DI:0.1UF,20%,50V	05397	C330C104M5U1CA
C105	281-0167-00			CAP,VAR,CER DI:9-45PF,200V	33095	53-717-001 D9-45
C106	290-0302-00			CAP,FXD,ELCTLT:100UF,10%,20V	05397	T110D107K020MS
C111	283-0000-00			CAP,FXD,CER DI:0.001UF,+100-0%,500V	59660	831-610-Y5U0102P
C118	281-0629-00			CAP,FXD,CER DI:33PF,5%,600V (C118, OPTION 14 ONLY)	52763	2RDPLZ007 33POJC
C119	281-0516-00			CAP,FXD,CER DI:39PF,+/-3.9PF,500V	52763	2RDPLZ007 39POKU
C138	283-0003-00			CAP,FXD,CER DI:0.01UF,+80-20%,150V	59821	D103Z40Z5UJDCEX
C149	283-0111-00			CAP,FXD,CER DI:0.1UF,20%,50V	05397	C330C104M5U1CA
C151	283-0111-00			CAP,FXD,CER DI:0.1UF,20%,50V	05397	C330C104M5U1CA
C154	290-0284-00			CAP,FXD,ELCTLT:4.7UF,10%,35V	05397	T110B475K035AS
C155	283-0111-00			CAP,FXD,CER DI:0.1UF,20%,50V	05397	C330C104M5U1CA
C157	283-0003-00			CAP,FXD,CER DI:0.01UF,+80-20%,150V	59821	D103Z40Z5UJDCEX
C159	281-0524-00			CAP,FXD,CER DI:150PF,+/-30PF,500V (C159, OPTION 14 ONLY)	52763	2RDPLZ007 150PMO
C164	290-0405-00			CAP,FXD,ELCTLT:10UF,+50-10%,150V (C164, OPTION 14 ONLY)	00853	556DD100T150B
C169	283-0003-00			CAP,FXD,CER DI:0.01UF,+80-20%,150V (C169, OPTION 14 ONLY)	59821	D103Z40Z5UJDCEX
C171	283-0003-00			CAP,FXD,CER DI:0.01UF,+80-20%,150V (C171, OPTION 14 ONLY)	59821	D103Z40Z5UJDCEX
C172	283-0003-00			CAP,FXD,CER DI:0.01UF,+80-20%,150V	59821	D103Z40Z5UJDCEX

Component No.	Tektronix Part No.	Serial/Assembly No. Effective	Dscont	Name & Description	Mfr. Code	Mfr. Part No.
C173	283-0003-00			CAP,FXD,CER DI:0.01UF,+80-20%,150V (C173, OPTION 14 ONLY)	59821	D103Z40Z5UJDCEX
C174	281-0218-00			CAP,VAR,CER DI:1-5PF,+2 -2.5%,100V (C174, OPTION 14 ONLY)	59660	513-011A1-5
C176	281-0593-00			CAP,FXD,CER DI:3.9PF,+/-0.25PF,500V	52763	2RDPLZ007 3P90CC
C177	281-0593-00			CAP,FXD,CER DI:3.9PF,+/-0.25PF,500V	52763	2RDPLZ007 3P90CC
C178	283-0003-00			CAP,FXD,CER DI:0.01UF,+80-20%,150V (C178, OPTION 14 ONLY)	59821	D103Z40Z5UJDCEX
C180	283-0003-00			CAP,FXD,CER DI:0.01UF,+80-20%,150V	59821	D103Z40Z5UJDCEX
C182	283-0003-00			CAP,FXD,CER DI:0.01UF,+80-20%,150V	59821	D103Z40Z5UJDCEX
C183	283-0003-00			CAP,FXD,CER DI:0.01UF,+80-20%,150V	59821	D103Z40Z5UJDCEX
C186	283-0003-00			CAP,FXD,CER DI:0.01UF,+80-20%,150V	59821	D103Z40Z5UJDCEX
C186	283-0000-00			CAP,FXD,CER DI:0.001UF,+100-0%,500V (C186, OPTION 14 ONLY)	59660	831-610-Y5U0102P
C187	283-0003-00			CAP,FXD,CER DI:0.01UF,+80-20%,150V (C187, OPTION 14 ONLY)	59821	D103Z40Z5UJDCEX
C189	283-0003-00			CAP,FXD,CER DI:0.01UF,+80-20%,150V (C189, OPTION 14 ONLY)	59821	D103Z40Z5UJDCEX
C191	283-0003-00			CAP,FXD,CER DI:0.01UF,+80-20%,150V	59821	D103Z40Z5UJDCEX
C192	283-0003-00			CAP,FXD,CER DI:0.01UF,+80-20%,150V	59821	D103Z40Z5UJDCEX
C193	290-0305-00	B020000		CAP,FXD,ELCTLT:3UF,20%,150V	26769	40LW305A150M1C
C197	283-0003-00			CAP,FXD,CER DI:0.01UF,+80-20%,150V (C197, OPTION 14 ONLY)	59821	D103Z40Z5UJDCEX
C198	283-0003-00			CAP,FXD,CER DI:0.01UF,+80-20%,150V (C198, OPTION 14 ONLY)	59821	D103Z40Z5UJDCEX
C202	281-0763-00			CAP,FXD,CER DI:47PF,10%,100V	04222	MA101A470KAA
C203	290-0778-00			CAP,FXD,ELCTLT:1UF,+50 -10%,50V,NPLZD	54473	ECE-A50N1
C204	290-0778-00			CAP,FXD,ELCTLT:1UF,+50 -10%,50V,NPLZD	54473	ECE-A50N1
C206	285-1076-00			CAP,FXD,PLASTIC:0.2UF,5%,100V	14752	230B1B204J
C207	281-0813-00			CAP,FXD,CER DI:0.047UF,20%,50V	05397	C412C473M5V2CA
C218	281-0809-00			CAP,FXD,CER DI:200 PF,5%,100V	04222	MA101A201JAA
C218	283-0640-00			CAP,FXD,MICA DI:160PF,1%,100V (C218, OPTION 15 ONLY)	00853	D155F161F0
C221	281-0812-00			CAP,FXD,CER DI:1000PF,10%,100V	04222	MA101C102KAA
C225	281-0773-00			CAP,FXD,CER DI:0.01UF,10%,100V	04222	MA201C103KAA
C235	285-1130-00			CAP,FXD,PLASTIC:0.22UF,1%,100V	50558	MH12D224F
C245	281-0812-00			CAP,FXD,CER DI:1000PF,10%,100V	04222	MA101C102KAA
C253	281-0812-00			CAP,FXD,CER DI:1000PF,10%,100V	04222	MA101C102KAA
C253	283-0150-00			CAP,FXD,CER DI:650PF,5%,200V (C253, OPTION 15 ONLY)	59821	2DDH60K651J
C255	283-0785-00			CAP,FXD,MICA DI:250PF,1%,500V	00853	D155F251F0
C255	283-0640-00			CAP,FXD,MICA DI:160PF,1%,100V (C255, OPTION 15 ONLY)	00853	D155F161F0
C265	285-0889-00			CAP,FXD,PLASTIC:0.0027UF,5%,100V	19396	DU490/74-28221
C265	283-0119-00			CAP,FXD,CER DI:2200PF,5%,200V (C265, OPTION 15 ONLY)	59660	855-XXXY5E0222J
C275	281-0811-00			CAP,FXD,CER DI:10PF,10%,100V	04222	MA101A100KAA
C283	281-0775-00			CAP,FXD,CER DI:0.1UF,20%,50V	04222	MA205E104MAA
C287	281-0775-00			CAP,FXD,CER DI:0.1UF,20%,50V	04222	MA205E104MAA
C296	290-0536-00			CAP,FXD,ELCTLT:10UF,20%,25V TANTALUM	05397	T368B106M025AS
C297	290-0534-00			CAP,FXD,ELCTLT:1UF,20%,35V	05397	T368A105M035AZ
C298	290-0536-00			CAP,FXD,ELCTLT:10UF,20%,25V TANTALUM	05397	T368B106M025AS
C302	290-0522-00			CAP,FXD,ELCTLT:1UF,20%,50V	05397	T368A105M050AZ
C303	290-0745-00	B031250		CAP,FXD,ELCTLT:22UF,+50-20%,25WVDC (OPTION 20 ONLY)	54473	ECE-A25V22L
C303	290-0745-00	B048000		CAP,FXD,ELCTLT:22UF,+50-20%,25WVDC (OPTION 15 ONLY)	54473	ECE-A25V22L
C304	290-0745-00	B032451		CAP,FXD,ELCTLT:22UF,+50-20%,25WVDC	54473	ECE-A25V22L
C304	290-0745-00	B031250		CAP,FXD,ELCTLT:22UF,+50-20%,25WVDC (OPTION 20 ONLY)	54473	ECE-A25V22L

Component No.	Tektronix Part No.	Serial/Assembly No. Effective	Dscont	Name & Description	Mfr. Code	Mfr. Part No.
C304	290-0745-00	B048000		CAP,FXD,ELCTLT:22UF,+50-20%,25WVDC (OPTION 15 ONLY)	54473	ECE-A25V22L
C305	281-0785-00	B032451		CAP,FXD,CER DI:68PF,10%,100V	04222	MA101A680KAA
C305	281-0762-00	B032451		CAP,FXD,CER DI:27PF,20%,100V (OPTION 20 ONLY)	04222	MA101A270MAA
C307	283-0000-00	B020000		CAP,FXD,CER DI:0.001UF,+100-0%,500V	59660	831-610-Y5U0102P
C308	283-0150-00			CAP,FXD,CER DI:650PF,5%,200V	59821	2DDH60K651J
C314	283-0003-00			CAP,FXD,CER DI:0.01UF,+80-20%,150V	59821	D103Z40Z5UJDCEX
C320	290-0778-00			CAP,FXD,ELCTLT:1UF,+50 -10%,50V,NPLZD	54473	ECE-A50N1
C322	290-0778-00			CAP,FXD,ELCTLT:1UF,+50 -10%,50V,NPLZD	54473	ECE-A50N1
C324	283-0204-00	B010100	B032450	CAP,FXD,CER DI:0.01UF,20%,50V	04222	SR155E103MAA
C324	283-0003-00	B032451		CAP,FXD,CER DI:0.01UF,+80-20%,150V	59821	D103Z40Z5UJDCEX
C324	283-0003-00	B010667		CAP,FXD,CER DI:0.01UF,+80-20%,150V (OPTION 14 AND 15 ONLY)	59821	D103Z40Z5UJDCEX
C326	283-0003-00			CAP,FXD,CER DI:0.01UF,+80-20%,150V	59821	D103Z40Z5UJDCEX
C339	283-0083-00			CAP,FXD,CER DI:0.0047UF,20%,500V	59660	811-565C471J
C341	290-0778-00			CAP,FXD,ELCTLT:1UF,+50 -10%,50V,NPLZD	54473	ECE-A50N1
C345	290-0778-00	B046689	B046688	CAP,FXD,ELCTLT:1UF,+50 -10%,50V,NPLZD	54473	ECE-A50N1
C350	283-0028-00	B010100	B039999	CAP,FXD,CER DI:0.0022UF,20%,50V	59660	0805585Y5S0222M
C350	283-0047-00	B040000		CAP,FXD,CER DI:270PF,5%,500V	59660	0831604Z5F0271J
C351	290-0187-00			CAP,FXD,ELCTLT:4.7UF,20%,35V	05397	T110B475M035AS
C353	290-0164-00	B010100	B039999	CAP,FXD,ELCTLT:1UF,+50-10%,150V	56289	500D105F150BA2R2
C353	290-0744-00	B040000		CAP,FXD,ELCTLT:3.3UF,+50%-10%,160V	54473	ECE-B160V3R3U
C354	290-0512-00			CAP,FXD,ELCTLT:22UF,20%,15V	05397	T368B226M015AS
C355	290-0512-00			CAP,FXD,ELCTLT:22UF,20%,15V	05397	T368B226M015AS
C362	283-0191-00			CAP,FXD,CER DI:0.022UF,20%,50V	04222	SR205C223MAA
C363	281-0500-00			CAP,FXD,CER DI:2.2PF,+/-0.5PF,500V	52763	2RDPLZ007 2P20DC
C364	285-0894-00			CAP,FXD,PLASTIC:5UF,5%,50V	14752	A650DIA505J
C364	285-1153-00			CAP,FXD,PLASTIC:10UF,20%,100V (C364, OPTION 15 ONLY)	14752	A1523
C366	283-0077-00	B032451		CAP,FXD,CER DI:330PF,5%,500V	59660	831-500B331J
C366	283-0077-00			CAP,FXD,CER DI:330PF,5%,500V (C366, OPTION 15 ONLY)	59660	831-500B331J
C371	283-0051-00			CAP,FXD,CER DI:0.0033UF,5%,100V	04222	SR301A332JAA
C372	283-0083-00			CAP,FXD,CER DI:0.0047UF,20%,500V	59660	811-565C471J
C373	283-0010-00			CAP,FXD,CER DI:0.05UF,+80-20%,50V	04222	SR305E503ZAA
C374	290-0536-00			CAP,FXD,ELCTLT:10UF,20%,25V TANTALUM	05397	T368B106M025AS
C376	283-0617-00			CAP,FXD,MICA DI:4700PF,10%,300V	00853	D195F472K0
C381	283-0001-00			CAP,FXD,CER DI:0.005UF,+100-0%,500V	59821	2DDH61L502P
C382	283-0081-00			CAP,FXD,CER DI:0.1UF,+80-20%,25V	59821	2DDU69E104Z
C382	283-0328-00			CAP,FXD,CER DI:0.03UF,+80-20%,200V (C382, OPTION 15 ONLY)	05397	C330C303Z2U5CA
C387	283-0000-00			CAP,FXD,CER DI:0.001UF,+100-0%,500V (634 ONLY)	59660	831-610-Y5U0102P
C387	283-0000-00	B071611		CAP,FXD,CER DI:0.001UF,+100-0%,500V (OPTION 15 ONLY)	59660	831-610-Y5U0102P
C388	290-0536-00			CAP,FXD,ELCTLT:10UF,20%,25V TANTALUM	05397	T368B106M025AS
C390	285-1090-00			CAP,FXD,PLASTIC:0.01UF,5%,1600V	14752	C2838
C393	283-0000-00			CAP,FXD,CER DI:0.001UF,+100-0%,500V	59660	831-610-Y5U0102P
C401	290-0536-00			CAP,FXD,ELCTLT:10UF,20%,25V TANTALUM	05397	T368B106M025AS
C402	290-0536-00			CAP,FXD,ELCTLT:10UF,20%,25V TANTALUM	05397	T368B106M025AS
C403	290-0534-00			CAP,FXD,ELCTLT:1UF,20%,35V	05397	T368A105M035AZ
C406	290-0272-00	B010100	B019999	CAP,FXD,ELCTLT:47UF,20%,50V	56289	109D476X0050F2
C406	290-0798-00	B020000		CAP,FXD,ELCTLT:180UF,+100-10%,40V	56289	672D187H040DM5C
C407	283-0111-00			CAP,FXD,CER DI:0.1UF,20%,50V	05397	C330C104M5U1CA
C411	283-0178-00			CAP,FXD,CER DI:0.1UF,20%,100V	05397	C330C104Z1U1CA
C412	283-0178-00			CAP,FXD,CER DI:0.1UF,20%,100V	05397	C330C104Z1U1CA
C432	283-0430-01			CAP,FXD,CER DI:0.02 UF,+80-20%,3KV,W/LEADS & COATING	80009	283-0430-01

Component No.	Tektronix Part No.	Serial/Assembly No. Effective	Dscont	Name & Description	Mfr. Code	Mfr. Part No.
C435	283-0351-00			CAP,FXD,CER DI:5000PF,20%,3000V	51406	DHR17Z5U502M3KV
C437	283-0430-00			CAP,FXD,CER DI:0.02UF,+80-20%,3000V	51406	DHR25-Z5U203Z3KV
C438	283-0430-00	B040000		CAP,FXD,CER DI:0.02UF,+80-20%,3000V	51406	DHR25-Z5U203Z3KV
C439	281-0774-00	B059699		CAP,FXD,CER DI:0.022MFD,20%,100V	04222	MA201E223MAA
C442	283-0341-00			CAP,FXD,CER DI:0.047UF,10%,100V	04222	SR301C473KAA
C449	283-0111-00			CAP,FXD,CER DI:0.1UF,20%,50V	05397	C330C104M5U1CA
C453	283-0203-00			CAP,FXD,CER DI:0.47UF,20%,50V	04222	SR305SC474MAA
C475	283-0032-00			CAP,FXD,CER DI:470PF,5%,500V	59660	831-000-Z5E0471J
C477	290-0405-00			CAP,FXD,ELCTLT:10UF,+50-10%,150V	00853	556DD100T150B
C499	283-0111-00			CAP,FXD,CER DI:0.1UF,20%,50V	05397	C330C104M5U1CA
C532	290-0577-00	B010100	B010666	CAP,FXD,ELCTLT:2000UF,T100-10%,50V	56289	68D10504
C532	290-0883-00	B010667		CAP,FXD,ELCTLT:3500UF,+100-10%,30V	56289	68D11001
C536	290-0778-00			CAP,FXD,ELCTLT:1UF,+50 -10%,50V,NPLZD	54473	ECE-A50N1
C542	290-0577-00	B010100	B010666	CAP,FXD,ELCTLT:2000UF,T100-10%,50V	56289	68D10504
C542	290-0883-00	B010667		CAP,FXD,ELCTLT:3500UF,+100-10%,30V	56289	68D11001
C546	290-0778-00			CAP,FXD,ELCTLT:1UF,+50 -10%,50V,NPLZD	54473	ECE-A50N1
C562	290-0437-00			CAP,FXD,ELCTLT:3500UF,+100-10%,25V	56289	68D10468
C566	290-0778-00			CAP,FXD,ELCTLT:1UF,+50 -10%,50V,NPLZD	54473	ECE-A50N1
C636	290-0778-00			CAP,FXD,ELCTLT:1UF,+50 -10%,50V,NPLZD (C636, OPTION 20 ONLY)	54473	ECE-A50N1
C637	283-0003-00	B046189		CAP,FXD,CER DI:0.01UF,+80-20%,150V (C637, OPTION 20 ONLY)	59821	D103Z40Z5UJDCEX
C646	290-0778-00			CAP,FXD,ELCTLT:1UF,+50 -10%,50V,NPLZD (C646, OPTION 20 ONLY)	54473	ECE-A50N1
C647	283-0003-00	B046189		CAP,FXD,CER DI:0.01UF,+80-20%,150V (C647, OPTION 20 ONLY)	59821	D103Z40Z5UJDCEX
C666	290-0778-00			CAP,FXD,ELCTLT:1UF,+50 -10%,50V,NPLZD (C666, OPTION 20 ONLY)	54473	ECE-A50N1
C667	283-0003-00	B046189		CAP,FXD,CER DI:0.01UF,+80-20%,150V C667, OPTION 20 ONLY)	59821	D103Z40Z5UJDCEX
C761	290-0522-00			CAP,FXD,ELCTLT:1UF,20%,50V (C761, OPTION 13 ONLY)	05397	T368A105M050AZ
C762	290-0522-00			CAP,FXD,ELCTLT:1UF,20%,50V (C762, OPTION 13 ONLY)	05397	T368A105M050AZ
C763	290-0522-00			CAP,FXD,ELCTLT:1UF,20%,50V (C763, OPTION 13 ONLY)	05397	T368A105M050AZ
C802	290-0536-00			CAP,FXD,ELCTLT:10UF,20%,25V TANTALUM (C802, OPTION 15 ONLY)	05397	T368B106M025AS
C808	283-0023-00			CAP,FXD,CER DI:0.1UF,+80-20%,12V (C808, OPTION 15 ONLY)	71590	2DDU66B104Z
C816	283-0023-00			CAP,FXD,CER DI:0.1UF,+80-20%,12V (C816, OPTION 15 ONLY)	71590	2DDU66B104Z
CR11	152-0400-00			SEMICOND DVC,DI:RECT,SI,400V,1A	04713	SR1977K
CR12	152-0400-00			SEMICOND DVC,DI:RECT,SI,400V,1A	04713	SR1977K
CR13	152-0066-00			SEMICOND DVC,DI:RECT,SI,400V,1A,DO-41	05828	GP10G-020
CR17	152-0066-00			SEMICOND DVC,DI:RECT,SI,400V,1A,DO-41	05828	GP10G-020
CR21	152-0061-00			SEMICOND DVC,DI:SW,SI,175V,0.1A,DO-35	07263	FDH2161
CR22	152-0061-00			SEMICOND DVC,DI:SW,SI,175V,0.1A,DO-35	07263	FDH2161
CR24	152-0066-00			SEMICOND DVC,DI:RECT,SI,400V,1A,DO-41	05828	GP10G-020
CR27	152-0061-00			SEMICOND DVC,DI:SW,SI,175V,0.1A,DO-35	07263	FDH2161
CR42	152-0061-00			SEMICOND DVC,DI:SW,SI,175V,0.1A,DO-35	07263	FDH2161
CR43	152-0066-00			SEMICOND DVC,DI:RECT,SI,400V,1A,DO-41	05828	GP10G-020
CR84	150-1017-00	B031600		LT EMITTING DIO:GREEN,550NM,55MA MAX	50434	HLMP3910
CR155	152-0141-02			SEMICOND DVC,DI:SW,SI,30V,150MA,30V,DO-35	03508	DA2527 (1N4152)
CR166	152-0141-02			SEMICOND DVC,DI:SW,SI,30V,150MA,30V,DO-35	03508	DA2527 (1N4152)
CR167	152-0141-02			SEMICOND DVC,DI:SW,SI,30V,150MA,30V,DO-35	03508	DA2527 (1N4152)
CR168	152-0141-02			SEMICOND DVC,DI:SW,SI,30V,150MA,30V,DO-35	03508	DA2527 (1N4152)
CR176	152-0242-00			SEMICOND DVC,DI:SIG,SI,225V,0.2A,DO-7 (CR176, OPTION 14 ONLY)	07263	FDH5004
CR178	152-0141-02			SEMICOND DVC,DI:SW,SI,30V,150MA,30V,DO-35	03508	DA2527 (1N4152)

Component No.	Tektronix Part No.	Serial/Assembly No. Effective	Dscont	Name & Description	Mfr. Code	Mfr. Part No.
				(CR178, OPTION 14 ONLY)		
CR179	152-0141-02			SEMICOND DVC,DI:SW,SI,30V,150MA,30V,DO-35	03508	DA2527 (1N4152)
				(CR179, OPTION 14 ONLY)		
CR181	152-0061-00			SEMICOND DVC,DI:SW,SI,175V,0.1A,DO-35	07263	FDH2161
CR184	152-0574-00			SEMICOND DVC,DI:SW,SI,120V,0.15A,DO-35	12969	NDP566
CR191	152-0061-00			SEMICOND DVC,DI:SW,SI,175V,0.1A,DO-35	07263	FDH2161
CR199	152-0574-00			SEMICOND DVC,DI:SW,SI,120V,0.15A,DO-35	12969	NDP566
				(CR199, OPTION 14 ONLY)		
CR207	152-0141-02			SEMICOND DVC,DI:SW,SI,30V,150MA,30V,DO-35	03508	DA2527 (1N4152)
CR237	152-0333-00			SEMICOND DVC,DI:SW,SI,55V,200MA,DO-35	07263	FDH-6012
CR238	152-0333-00	B032300		SEMICOND DVC,DI:SW,SI,55V,200MA,DO-35	07263	FDH-6012
CR283	152-0333-00			SEMICOND DVC,DI:SW,SI,55V,200MA,DO-35	07263	FDH-6012
CR287	152-0141-02			SEMICOND DVC,DI:SW,SI,30V,150MA,30V,DO-35	03508	DA2527 (1N4152)
CR322	152-0141-02			SEMICOND DVC,DI:SW,SI,30V,150MA,30V,DO-35	03508	DA2527 (1N4152)
CR326	152-0141-02			SEMICOND DVC,DI:SW,SI,30V,150MA,30V,DO-35	03508	DA2527 (1N4152)
CR327	152-0141-02			SEMICOND DVC,DI:SW,SI,30V,150MA,30V,DO-35	03508	DA2527 (1N4152)
CR330	152-0061-00			SEMICOND DVC,DI:SW,SI,175V,0.1A,DO-35	07263	FDH2161
CR331	152-0061-00			SEMICOND DVC,DI:SW,SI,175V,0.1A,DO-35	07263	FDH2161
CR353	152-0107-00			SEMICOND DVC,DI:RECT,SI,400 V,400MA,A1	12969	"G727"
CR354	152-0398-00			SEMICOND DVC,DI:RECT,SI,200V,1A	04713	SR3609RL
CR355	152-0398-00			SEMICOND DVC,DI:RECT,SI,200V,1A	04713	SR3609RL
CR371	152-0141-02			SEMICOND DVC,DI:SW,SI,30V,150MA,30V,DO-35	03508	DA2527 (1N4152)
CR390	152-0676-00	B010100	B010579	SEMICOND DVC,DI:RECT,SI,400V,3A	03508	A115DX112
CR390	152-0661-00	B010580		SEMICOND DVC,DI:RECT,SI,600V,3A	04713	SR3523
CR393	152-0170-00			SEMICOND DVC,DI:RECT,SI,1500V,25MA,A83A	12969	86-117
CR394	152-0141-02	B020000		SEMICOND DVC,DI:SW,SI,30V,150MA,30V,DO-35	03508	DA2527 (1N4152)
CR395	152-0141-02			SEMICOND DVC,DI:SW,SI,30V,150MA,30V,DO-35	03508	DA2527 (1N4152)
CR396	152-0141-02			SEMICOND DVC,DI:SW,SI,30V,150MA,30V,DO-35	03508	DA2527 (1N4152)
CR397	152-0141-02			SEMICOND DVC,DI:SW,SI,30V,150MA,30V,DO-35	03508	DA2527 (1N4152)
CR410	152-0333-00			SEMICOND DVC,DI:SW,SI,55V,200MA,DO-35	07263	FDH-6012
CR411	152-0061-00			SEMICOND DVC,DI:SW,SI,175V,0.1A,DO-35	07263	FDH2161
CR412	152-0061-00			SEMICOND DVC,DI:SW,SI,175V,0.1A,DO-35	07263	FDH2161
CR415	152-0333-00			SEMICOND DVC,DI:SW,SI,55V,200MA,DO-35	07263	FDH-6012
CR417	152-0333-00			SEMICOND DVC,DI:SW,SI,55V,200MA,DO-35	07263	FDH-6012
CR427	152-0333-00			SEMICOND DVC,DI:SW,SI,55V,200MA,DO-35	07263	FDH-6012
CR435	152-0385-00	B010100	B019999	SEMICOND DVC,DI:RECT,SI,2000V,0.1A,	14099	M20
CR435	152-0639-00	B020000		SEMICOND DVC,DI:RECT,SI,10KV,10MA,A1XJ	52306	CX345
CR439	152-0107-00	B059699		SEMICOND DVC,DI:RECT,SI,400 V,400MA,A1	12969	"G727"
CR451	152-0061-00	B010100	B010345	SEMICOND DVC,DI:SW,SI,175V,0.1A,DO-35	07263	FDH2161
CR451	152-0233-00	B010346		SEMICOND DVC,DI:SW,SI,80V,75MA,DO-7	03508	DA2737
CR452	152-0061-00	B010100	B010345	SEMICOND DVC,DI:SW,SI,175V,0.1A,DO-35	07263	FDH2161
CR452	152-0233-00	B010346		SEMICOND DVC,DI:SW,SI,80V,75MA,DO-7	03508	DA2737
CR475	152-0061-00			SEMICOND DVC,DI:SW,SI,175V,0.1A,DO-35	07263	FDH2161
CR477	152-0061-00			SEMICOND DVC,DI:SW,SI,175V,0.1A,DO-35	07263	FDH2161
CR480	152-0061-00			SEMICOND DVC,DI:SW,SI,175V,0.1A,DO-35	07263	FDH2161
CR531	152-0585-00	B010100	B010590	SEMICOND DVC,DI:RECT,SI,200V,1A	14936	W02M-30
CR531	152-0488-00	B010591	B010666	SEMICOND DVC,DI:RECT,SI,200V,0.5A	04713	SDA317
CR531	152-0462-00	B010667		SEMICOND DVC,DI:RECT,SI,200V,2.5A	14936	KBU4D
CR561	152-0585-00			SEMICOND DVC,DI:RECT,SI,200V,1A	14936	W02M-30
CR717	152-0141-02			SEMICOND DVC,DI:SW,SI,30V,150MA,30V,DO-35	03508	DA2527 (1N4152)
				(CR717, OPTION 13 ONLY)		
CR770	150-1017-00			LT EMITTING DIO:GREEN,550NM,55MA MAX	50434	HLMP3910
CR817	152-0242-00			SEMICOND DVC,DI:SIG,SI,225V,0.2A,DO-7	07263	FDH5004
				(CR817, OPTION 15 ONLY)		
E324	276-0532-00	B040000		SHLD BEAD,ELEK:FERRITE	02114	56-590-65/4A6
E325	276-0532-00	B040000		SHLD BEAD,ELEK:FERRITE	02114	56-590-65/4A6
F406	159-0040-00	B010100	B010820	FUSE,CARTRIDGE:3AG,0.7A,250V,20SEC	71400	MDL 7/10
F406	159-0019-00	B010821		FUSE,CARTRIDGE:3AG,1A,250V,SLOW BLOW	71400	MDL 1
F511	159-0018-00			FUSE,CARTRIDGE:3AG,0.8A,250V,30SEC	71400	MDL 8/10

Component No.	Tektronix Part No.	Serial/Assembly No. Effective	Dscont	Name & Description	Mfr. Code	Mfr. Part No.
				(F511, REMOVE FOR OPTION 20)		
F561	159-0059-00	B010100	B010124	FUSE,WIRE LEAD:5A,125V	71400	A5
F561	159-0141-00	B010125		FUSE,WIRE LEAD:1.5A,125V,0.1 SEC	71400	GLX 1 1/2
F632	159-0019-00	B010100	B010666	FUSE,CARTRIDGE:3AG,1A,250V,SLOW BLOW (OPTION 20 ONLY)	71400	MDL 1
F632	159-0023-00	B010667		FUSE,CARTRIDGE:3AG,2A,250V,SLOW BLOW (OPTION 20 ONLY)	71400	MDX2
F642	159-0040-00			FUSE,CARTRIDGE:3AG,0.7A,250V,20SEC (F642, OPTION 20 ONLY)	71400	MDL 7/10
F662	159-0029-00	B010100	B071319	FUSE,CARTRIDGE:3AG,0.3A,250V,20SEC (OPTION 20 ONLY)	71400	MDL 3/10
F662	159-0029-01	B071320		FUSE,CARTRIDGE:BUSSMAN ONLY (OPTION 20 ONLY)	71400	MDL3/10
J601	131-0955-00			CONN,RCPT,ELEC:BNC,FEMALE (OPTION 20 ONLY)	13511	31-279
J602	131-0955-00			CONN,RCPT,ELEC:BNC,FEMALE (OPTION 20 ONLY)	13511	31-279
J607	131-0955-00			CONN,RCPT,ELEC:BNC,FEMALE (OPTION 20 ONLY)	13511	31-279
J665	131-0955-00			CONN,RCPT,ELEC:BNC,FEMALE (OPTION 20 ONLY)	13511	31-279
L303	120-0382-00	B032451		COIL,RF:210UH,+28%-43%,14 TURNS	80009	120-0382-00
L303	120-0382-00	B031250		COIL,RF:210UH,+28%-43%,14 TURNS (OPTION 20 ONLY)	80009	120-0382-00
L303	120-0382-00	B048000		COIL,RF:210UH,+28%-43%,14 TURNS (OPTION 15 ONLY)	80009	120-0382-00
L304	120-0382-00	B032451		COIL,RF:210UH,+28%-43%,14 TURNS	80009	120-0382-00
L304	120-0382-00	B031250		COIL,RF:210UH,+28%-43%,14 TURNS (OPTION 20 ONLY)	80009	120-0382-00
L304	120-0382-00	B048000		COIL,RF:210UH,+28%-43%,14 TURNS (OPTION 15 ONLY)	80009	120-0382-00
L335	108-0944-00	B010100	B047638	COIL,TUBE DEFL:FIXED,HORZ & VERT (OPTION 01 ONLY)	80009	108-0944-00
L335	108-0944-02	B047639	B049690	COIL,TUBE DEFL:FXD,HORIZ & VERT (OPTION 01 ONLY)	50783	EX-5189
L335	108-0944-03	B049691		COIL,TUBE DEFL:FXD,HORIZ & VERT,W/LEADS (OPTION 01 ONLY)	50783	(ADVISE)
L335	108-0946-00	B010100	B049597	COIL,TUBE DEFL:FIXED,HORIZ & VERT	80009	108-0946-00
L335	108-0946-01	B049598		COIL,TUBE DEFL:FIXED,HORIZ & VERT	99409	C10730-8
L335	108-0952-00			COIL,TUBE DEFL:HORIZONTAL & VERTICAL (OPTION 15 ONLY)	80009	108-0952-00
L363	108-0688-00			COIL,RF:FIXED,3.5MH	80009	108-0688-00
L364	114-0374-00			COIL,RF:VARIABLE,30-120UH	02113	Z6822
L364	114-0375-00			COIL,LINEARITY:VARIABLE,6 UH TO 55 UH (OPTION 15 ONLY)	02113	Z-7228
L406	120-0382-00			COIL,RF:210UH,+28%-43%,14 TURNS	80009	120-0382-00
L602	108-0496-00			COIL,RF:FIXED,400NH	80009	108-0496-00
P510	161-0057-01			CABLE ASSY,PWR,:3,16 AWG,125V,96.0 L (P510, REMOVE FOR OPTION 20)	80009	161-0057-01
P520	131-1896-00			BUS,CONDUCTOR:8.22 AWG,1.5 L	80009	131-1896-00
P521	131-1895-00			BUS,CONDUCTOR:8,22 AWG,1.5L	80009	131-1895-00
Q21	151-0169-00			TRANSISTOR:NPN,SI,TO-5	04713	ST830
Q22	151-0280-00			TRANSISTOR:PNP,SI,TO-39	04713	SS8065
Q26	151-0169-00			TRANSISTOR:NPN,SI,TO-5	04713	ST830
Q27	151-0190-00			TRANSISTOR:NPN,SI,TO-92	80009	151-0190-00
Q41	151-0280-00			TRANSISTOR:PNP,SI,TO-39	04713	SS8065
Q42	151-0188-00			TRANSISTOR:PNP,SI,TO-92	80009	151-0188-00
Q53	151-0188-00			TRANSISTOR:PNP,SI,TO-92	80009	151-0188-00
Q56	151-1005-00			TRANSISTOR:FET,N-CHAN,SI,TO-106	04713	SPF685
Q58	151-0190-00			TRANSISTOR:NPN,SI,TO-92	80009	151-0190-00
Q60	151-0188-00			TRANSISTOR:PNP,SI,TO-92	80009	151-0188-00

Component No.	Tektronix Part No.	Serial/Assembly No. Effective	Dscont	Name & Description	Mfr. Code	Mfr. Part No.
Q62	151-0190-00			TRANSISTOR:NPN,SI,TO-92	80009	151-0190-00
Q77	151-0188-00			TRANSISTOR:PNP,SI,TO-92	80009	151-0188-00
Q113	151-0192-00			TRANSISTOR:NPN,SI,TO-92	04713	SPS8801
Q114	151-0190-00			TRANSISTOR:NPN,SI,TO-92	80009	151-0190-00
Q123	151-0192-00			TRANSISTOR:NPN,SI,TO-92	04713	SPS8801
Q124	151-0190-00			TRANSISTOR:NPN,SI,TO-92	80009	151-0190-00
Q126	151-0188-00			TRANSISTOR:PNP,SI,TO-92	80009	151-0188-00
Q156	151-0188-00			TRANSISTOR:PNP,SI,TO-92	80009	151-0188-00
Q167	151-0190-00			TRANSISTOR:NPN,SI,TO-92	80009	151-0190-00
Q170	151-0441-00			TRANSISTOR:NPN,SI,TO-72 (Q170, OPTION 14 ONLY)	04713	SRF501
Q171	151-0190-00			TRANSISTOR:NPN,SI,TO-92	80009	151-0190-00
Q172	151-0221-00			TRANSISTOR:PNP,SI,TO-92 (Q172, OPTION 14 ONLY)	80009	151-0221-00
Q173	151-0188-00			TRANSISTOR:PNP,SI,TO-92	80009	151-0188-00
Q174	151-0301-00			TRANSISTOR:PNP,SI,TO-18 (Q174, OPTION 14 ONLY)	04713	ST898
Q176	151-0302-00			TRANSISTOR:NPN,SI,TO-18 (Q176, OPTION 14 ONLY)	04713	ST899
Q181	151-0406-00	B010100	B030100	TRANSISTOR:PNP,SI,TO-39	04713	ST1264
Q181	151-0406-02	B030101		TRANSISTOR:SCREENED	04713	ST1731H
Q182	151-0124-00	B010100	B030100	TRANSISTOR:NPN,SI,TO-39	04713	SM8138
Q182	151-0124-02	B030101		TRANSISTOR:NPN,SI,TO-39	04713	SM8138H
Q183	151-0406-00	B010100	B030100	TRANSISTOR:PNP,SI,TO-39 (Q183, OPTION 14 ONLY)	04713	ST1264
Q183	151-0406-02	B030101		TRANSISTOR:SCREENED (Q183, OPTION 14 ONLY)	04713	ST1731H
Q184	151-0406-00	B010100	B030100	TRANSISTOR:PNP,SI,TO-39 (Q184, OPTION 14 ONLY)	04713	ST1264
Q184	151-0406-02	B030101		TRANSISTOR:SCREENED (Q184, OPTION 14 ONLY)	04713	ST1731H
Q185	151-0124-00			TRANSISTOR:NPN,SI,TO-39 (Q185, OPTION 14 ONLY)	04713	SM8138
Q186	151-0124-00			TRANSISTOR:NPN,SI,TO-39 (Q186, OPTION 14 ONLY)	04713	SM8138
Q191	151-0124-00	B010100	B030100	TRANSISTOR:NPN,SI,TO-39	04713	SM8138
Q191	151-0124-02	B030101		TRANSISTOR:NPN,SI,TO-39	04713	SM8138H
Q192	151-0406-00	B010100	B030100	TRANSISTOR:PNP,SI,TO-39	04713	ST1264
Q192	151-0406-02	B030101		TRANSISTOR:SCREENED	04713	ST1731H
Q193	151-0124-00			TRANSISTOR:NPN,SI,TO-39 (Q193, OPTION 14 ONLY)	04713	SM8138
Q194	151-0124-00			TRANSISTOR:NPN,SI,TO-39 (Q194, OPTION 14 ONLY)	04713	SM8138
Q195	151-0406-00	B010100	B030100	TRANSISTOR:PNP,SI,TO-39 (Q195, OPTION 14 ONLY)	04713	ST1264
Q195	151-0406-02	B030101		TRANSISTOR:SCREENED (Q195, OPTION 14 ONLY)	04713	ST1731H
Q196	151-0406-00	B010100	B030100	TRANSISTOR:PNP,SI,TO-39 (Q196, OPTION 14 ONLY)	04713	ST1264
Q196	151-0406-02	B030101		TRANSISTOR:SCREENED (Q196, OPTION 14 ONLY)	04713	ST1731H
Q205	151-0190-00			TRANSISTOR:NPN,SI,TO-92	80009	151-0190-00
Q211	151-0188-00			TRANSISTOR:PNP,SI,TO-92	80009	151-0188-00
Q212	151-0190-00			TRANSISTOR:NPN,SI,TO-92	80009	151-0190-00
Q216	151-0190-00			TRANSISTOR:NPN,SI,TO-92	80009	151-0190-00
Q221	151-0192-00			TRANSISTOR:NPN,SI,TO-92	04713	SPS8801
Q228	151-0190-00			TRANSISTOR:NPN,SI,TO-92	80009	151-0190-00
Q231	151-0188-00			TRANSISTOR:PNP,SI,TO-92	80009	151-0188-00
Q235	151-0192-00			TRANSISTOR:NPN,SI,TO-92	04713	SPS8801
Q237	151-0190-00			TRANSISTOR:NPN,SI,TO-92	80009	151-0190-00

Component No.	Tektronix Part No.	Serial/Assembly No. Effective	Dscont	Name & Description	Mfr. Code	Mfr. Part No.
Q258	151-0190-00			TRANSISTOR:NPN,SI,TO-92	80009	151-0190-00
Q261	151-0188-00			TRANSISTOR:PNP,SI,TO-92	80009	151-0188-00
Q265	151-0192-00			TRANSISTOR:NPN,SI,TO-92	04713	SPS8801
Q267	151-0190-00			TRANSISTOR:NPN,SI,TO-92	80009	151-0190-00
Q316	151-0188-00			TRANSISTOR:PNP,SI,TO-92	80009	151-0188-00
Q317	151-0188-00			TRANSISTOR:PNP,SI,TO-92	80009	151-0188-00
Q324	151-0347-00			TRANSISTOR:NPN,SI,TO-92	04713	SPS7951
Q326	151-0350-00			TRANSISTOR:PNP,SI,TO-92	04713	SPS6700
Q327	151-0347-00			TRANSISTOR:NPN,SI,TO-92	04713	SPS7951
Q328	151-0350-00			TRANSISTOR:PNP,SI,TO-92	04713	SPS6700
Q330	151-0464-00			TRANSISTOR:NPN,SI,TO-220	04713	SJE412
Q331	151-0462-00			TRANSISTOR:PNP,SI,TO-220	04713	SJE491
Q351	151-0405-00	B010100	B030100	TRANSISTOR:SELECTED	04713	SJE943
Q351	151-0405-04	B030101	B071650	TRANSISTOR:SCREENED	80009	151-0405-04
Q351	151-0405-00	B071651		TRANSISTOR:SELECTED	04713	SJE943
Q360	151-0462-00			TRANSISTOR:PNP,SI,TO-220	04713	SJE491
Q361	151-0464-00			TRANSISTOR:NPN,SI,TO-220	04713	SJE412
Q385	151-0497-00			TRANSISTOR:NPN,SI,TO-220	04713	SJE1985
Q390	151-0449-00			TRANSISTOR:NPN,SI,SEL,TO-3	04713	SJ3259
Q395	151-0192-00			TRANSISTOR:NPN,SI,TO-92	04713	SPS8801
Q396	151-0190-00			TRANSISTOR:NPN,SI,TO-92	80009	151-0190-00
Q413	151-0190-00			TRANSISTOR:NPN,SI,TO-92	80009	151-0190-00
Q415	151-0349-00	B010100	B030100	TRANSISTOR:NPN,SI,SELECTED,TO-127	04713	SJE924
Q415	151-0349-05	B030101	B071650	TRANSISTOR:SCREENED	80009	151-0349-05
Q415	151-0349-00	B071651		TRANSISTOR:NPN,SI,SELECTED,TO-127	04713	SJE924
Q416	151-0136-00			TRANSISTOR:NPN,SI,TO-39	02735	35495
Q417	151-0134-00			TRANSISTOR:PNP,SI,TO-39	04713	SM3195
Q427	151-0207-00			TRANSISTOR:NPN,SI,X-55,SEL	57668	XD11BCP0207
Q475	151-0188-00			TRANSISTOR:PNP,SI,TO-92	80009	151-0188-00
Q480	151-0250-00			TRANSISTOR:NPN,SI,TO-104	07263	S036744
Q710	151-0190-00			TRANSISTOR:NPN,SI,TO-92 (Q710, OPTION 13 ONLY)	80009	151-0190-00
Q711	151-0188-00			TRANSISTOR:PNP,SI,TO-92 (Q711, OPTION 13 ONLY)	80009	151-0188-00
Q719	151-0188-00			TRANSISTOR:PNP,SI,TO-92 (Q719, OPTION 13 ONLY)	80009	151-0188-00
Q730	151-0188-00			TRANSISTOR:PNP,SI,TO-92 (Q730, OPTION 13 ONLY)	80009	151-0188-00
Q731	151-0190-00			TRANSISTOR:NPN,SI,TO-92 (Q731, OPTION 13 ONLY)	80009	151-0190-00
Q805	151-0216-00			TRANSISTOR:PNP,SI,TO-92 (Q805, OPTION 15 ONLY)	04713	SPS8803
Q808	151-0216-00			TRANSISTOR:PNP,SI,TO-92 (Q808, OPTION 15 ONLY)	04713	SPS8803
R13	315-0472-00	B010346		RES,FXD,FILM:4.7K OHM,5%,0.25W	57668	NTR25J-E04K7
R18	301-0333-00			RES,FXD,FILM:33K OHM,5%,0.5W	19701	5053CX33K00J
R19	301-0333-00			RES,FXD,FILM:33K OHM,5%,0.5W	19701	5053CX33K00J
R21	315-0510-00			RES,FXD,FILM:51 OHM,5%,0.25W	19701	5043CX51R00J
R23	315-0394-00			RES,FXD,FILM:390K OHM,5%,0.25W	57668	NTR25J-E390K
R25	315-0182-00	B040000		RES,FXD,FILM:1.8K OHM,5%,0.25W	57668	NTR25J-E1K8
R26	315-0104-00			RES,FXD,FILM:100K OHM,5%,0.25W	57668	NTR25J-E100K
R30	311-1888-00			RES,VAR,NONWW:PNL,20K OHM,1W (R30,OPTION 16,17 ONLY)	01121	14M871
R31	315-0563-00			RES,FXD,FILM:56K OHM,5%,0.25W	19701	5043CX56K00J
R34	315-0512-00			RES,FXD,FILM:5.1K OHM,5%,0.25W	57668	NTR25J-E05K1
R35	311-1560-00			RES,VAR,NONWW:TRMR,5K OHM,0.5W	32997	3352T-1-502
R39	315-0911-00			RES,FXD,FILM:910 OHM,5%,0.25W	57668	NTR25J-E910E
R41	315-0512-00			RES,FXD,FILM:5.1K OHM,5%,0.25W	57668	NTR25J-E05K1
R42	315-0512-00			RES,FXD,FILM:5.1K OHM,5%,0.25W	57668	NTR25J-E05K1

Component No.	Tektronix Part No.	Serial/Assembly No. Effective	Dscont	Name & Description	Mfr. Code	Mfr. Part No.
R44	315-0470-00			RES,FXD,FILM:47 OHM,5%,0.25W	57668	NTR25J-E47E0
R51	315-0122-00			RES,FXD,FILM:1.2K OHM,5%,0.25W	57668	NTR25J-E01K2
R52	315-0102-00			RES,FXD,FILM:1K OHM,5%,0.25W	57668	NTR25JE01K0
R53	315-0103-00			RES,FXD,FILM:10K OHM,5%,0.25W	19701	5043CX10K00J
R54	315-0102-00			RES,FXD,FILM:1K OHM,5%,0.25W	57668	NTR25JE01K0
R56	315-0105-00			RES,FXD,FILM:1M OHM,5%,0.25W	19701	5043CX1M000J
R57	315-0163-00			RES,FXD,FILM:16K OHM,5%,0.25W	57668	NTR25J-E 16K
R58	315-0102-00			RES,FXD,FILM:1K OHM,5%,0.25W	57668	NTR25JE01K0
R59	315-0102-00			RES,FXD,FILM:1K OHM,5%,0.25W	57668	NTR25JE01K0
R60	315-0102-00			RES,FXD,FILM:1K OHM,5%,0.25W	57668	NTR25JE01K0
R61	315-0470-00			RES,FXD,FILM:47 OHM,5%,0.25W	57668	NTR25J-E47E0
R62	315-0392-00			RES,FXD,FILM:3.9K OHM,5%,0.25W	57668	NTR25J-E03K9
R64	315-0512-00			RES,FXD,FILM:5.1K OHM,5%,0.25W	57668	NTR25J-E05K1
R65	311-1560-00			RES,VAR,NONWW:TRMR,5K OHM,0.5W	32997	3352T-1-502
R66	315-0512-00			RES,FXD,FILM:5.1K OHM,5%,0.25W	57668	NTR25J-E05K1
R72	307-0023-00			RES,FXD,CMPSN:4.7 OHM,10%,0.5W	01121	EB47G1
R73	307-0023-00			RES,FXD,CMPSN:4.7 OHM,10%,0.5W	01121	EB47G1
R77	315-0472-00			RES,FXD,FILM:4.7K OHM,5%,0.25W	57668	NTR25J-E04K7
R78	315-0123-00			RES,FXD,FILM:12K OHM,5%,0.25W	57668	NTR25J-E12K0
R79	315-0104-00			RES,FXD,FILM:100K OHM,5%,0.25W	57668	NTR25J-E100K
R84	315-0750-00			RES,FXD,FILM:75 OHM,5%,0.25W	57668	NTR25J-E75E0
R85	311-1888-00			RES,VAR,NONWW:PNL,20K OHM,1W	01121	14M871
R86	315-0682-00			RES,FXD,FILM:6.8K OHM,5%,0.25W	57668	NTR25J-E06K8
R87	315-0273-00			RES,FXD,FILM:27K OHM,5%,0.25W	57668	NTR25J-E27K0
R88	315-0433-00			RES,FXD,FILM:43K OHM,5%,0.25W	19701	5043CX43K00J
R89	315-0183-00			RES,FXD,FILM:18K OHM,5%,0.25W	19701	5043CX18K00J
R90	311-1888-00			RES,VAR,NONWW:PNL,20K OHM,1W	01121	14M871
R91	315-0134-00			RES,FXD,FILM:130K OHM,5%,0.25W	57668	NTR25J-E130K
R91	315-0623-00			RES,FXD,FILM:62K OHM,5%,0.25W (R91,OPTION 13 ONLY)	19701	5043CX62K00J
R93	315-0333-00			RES,FXD,FILM:33K OHM,5%,0.25W	57668	NTR25J-E33K0
R95	311-1558-00			RES,VAR,NONWW:TRMR,20K OHM,0.5W	32997	3352T-1-203
R102	321-0085-03			RES,FXD,FILM:75 OHM,0.25%,0.125W,TC=T2 (R102, REMOVE FOR OPTION 20)	57668	CRB14 CYE 75 OHM
R105	315-0273-00			RES,FXD,FILM:27K OHM,5%,0.25W	57668	NTR25J-E27K0
R107	321-0085-00			RES,FXD,FILM:75 OHM,1%,0.125W,TC=T0	57668	CRB14FXE 75 OHM
R108	315-0242-00			RES,FXD,FILM:2.4K OHM,5%,0.25W	57668	NTR25J-E02K4
R111	315-0133-00			RES,FXD,FILM:13K OHM,5%,0.25W	19701	5043CX13K00J
R112	315-0332-00			RES,FXD,FILM:3.3K OHM,5%,0.25W	57668	NTR25J-E03K3
R113	315-0221-00			RES,FXD,FILM:220 OHM,5%,0.25W	57668	NTR25J-E220E
R114	315-0222-00			RES,FXD,FILM:2.2K OHM,5%,0.25W	57668	NTR25J-E02K2
R118	321-0162-00			RES,FXD,FILM:475 OHM,1%,0.125W,TC=T0	19701	5033ED475R0F
R119	315-0222-00			RES,FXD,FILM:2.2K OHM,5%,0.25W	57668	NTR25J-E02K2
R120	321-0162-00			RES,FXD,FILM:475 OHM,1%,0.125W,TC=T0	19701	5033ED475R0F
R123	315-0221-00			RES,FXD,FILM:220 OHM,5%,0.25W	57668	NTR25J-E220E
R124	315-0222-00			RES,FXD,FILM:2.2K OHM,5%,0.25W	57668	NTR25J-E02K2
R125	311-1564-00			RES,VAR,NONWW:TRMR,500 OHM,0.5W	32997	3352T-CK5501
R126	315-0751-00			RES,FXD,FILM:750 OHM,5%,0.25W	57668	NTR25J-E750E
R127	315-0101-00	B010230		RES,FXD,FILM:100 OHM,5%,0.25W	57668	NTR25J-E 100E
R128	321-0210-00			RES,FXD,FILM:1.50K OHM,1%,0.125W,TC=T0	19701	5033ED1K50F
R129	321-0239-00			RES,FXD,FILM:3.01K OHM,1%,0.125W,TC=T0	19701	5043ED3K010F
R134	315-0101-00	B010346		RES,FXD,FILM:100 OHM,5%,0.25W	57668	NTR25J-E 100E
R134	315-0101-00			RES,FXD,FILM:100 OHM,5%,0.25W (R134, OPTION 14 ONLY)	57668	NTR25J-E 100E
R136	315-0103-00			RES,FXD,FILM:10K OHM,5%,0.25W	19701	5043CX10K00J
R137	315-0562-00			RES,FXD,FILM:5.6K OHM,5%,0.25W	57668	NTR25J-E05K6
R138	315-0101-00			RES,FXD,FILM:100 OHM,5%,0.25W	57668	NTR25J-E 100E
R141	315-0242-00			RES,FXD,FILM:2.4K OHM,5%,0.25W	57668	NTR25J-E02K4

Component No.	Tektronix Part No.	Serial/Assembly No. Effective	Dscont	Name & Description	Mfr. Code	Mfr. Part No.
R142	321-0185-00			RES,FXD,FILM:825 OHM,1%,0.125W,TC=T0	07716	CEAD825R0F
R143	315-0242-00			RES,FXD,FILM:2.4K OHM,5%,0.25W	57668	NTR25J-E02K4
R144	315-0102-00			RES,FXD,FILM:1K OHM,5%,0.25W	57668	NTR25JE01K0
R147	315-0132-00			RES,FXD,FILM:1.3K OHM,5%,0.25W	57668	NTR25J-E01K3
R148	315-0101-00			RES,FXD,FILM:100 OHM,5%,0.25W	57668	NTR25J-E 100E
R149	315-0163-00			RES,FXD,FILM:16K OHM,5%,0.25W	57668	NTR25J-E 16K
R151	315-0221-00			RES,FXD,FILM:220 OHM,5%,0.25W	57668	NTR25J-E220E
R155	315-0221-00			RES,FXD,FILM:220 OHM,5%,0.25W	57668	NTR25J-E220E
R156	315-0111-00			RES,FXD,FILM:110 OHM,5%,0.25W	57668	NTR25J-E110E
R157	315-0102-00			RES,FXD,FILM:1K OHM,5%,0.25W	57668	NTR25JE01K0
R158	315-0910-00			RES,FXD,FILM:91 OHM,5%,0.25W (R158, OPTION 14 ONLY)	19701	5043CX91R00J
R159	315-0560-00			RES,FXD,FILM:56 OHM,5%,0.25W (R159, OPTION 14 ONLY)	57668	NTR25J-E56E0
R163	315-0150-00			RES,FXD,FILM:15 OHM,5%,0.25W (R163, OPTION 14 ONLY)	19701	5043CX15R00J
R164	315-0100-00			RES,FXD,FILM:10 OHM,5%,0.25W (R164, OPTION 14 ONLY)	19701	5043CX10RR00J
R165	315-0911-00			RES,FXD,FILM:910 OHM,5%,0.25W	57668	NTR25J-E910E
R166	315-0201-00			RES,FXD,FILM:200 OHM,5%,0.25W	57668	NTR25J-E200E
R167	315-0201-00			RES,FXD,FILM:200 OHM,5%,0.25W	57668	NTR25J-E200E
R168	315-0202-00			RES,FXD,FILM:2K OHM,5%,0.25W (R168, OPTION 14 ONLY)	57668	NTR25J-E 2K
R169	315-0101-00			RES,FXD,FILM:100 OHM,5%,0.25W (R169, OPTION 14 ONLY)	57668	NTR25J-E 100E
R170	315-0202-00			RES,FXD,FILM:2K OHM,5%,0.25W (R170, OPTION 14 ONLY)	57668	NTR25J-E 2K
R171	315-0101-00			RES,FXD,FILM:100 OHM,5%,0.25W	57668	NTR25J-E 100E
R172	315-0510-00			RES,FXD,FILM:51 OHM,5%,0.25W	19701	5043CX51R00J
R173	315-0101-00			RES,FXD,FILM:100 OHM,5%,0.25W	57668	NTR25J-E 100E
R174	323-0260-00			RES,FXD,FILM:4.99K OHM,1%,0.5W,TC=T0 (R174, OPTION 14 ONLY)	75042	CECT0-4991F
R175	323-0260-00			RES,FXD,FILM:4.99K OHM,1%,0.5W,TC=T0 (R175, OPTION 14 ONLY)	75042	CECT0-4991F
R176	323-0277-00			RES,FXD,FILM:7.50K OHM,1%,0.5W,TC=T0	75042	CECT0-7501F
R177	323-0277-00			RES,FXD,FILM:7.50K OHM,1%,0.5W,TC=T0	75042	CECT0-7501F
R178	315-0123-00			RES,FXD,FILM:12K OHM,5%,0.25W (R178, OPTION 14 ONLY)	57668	NTR25J-E12K0
R179	315-0123-00			RES,FXD,FILM:12K OHM,5%,0.25W (R179, OPTION 14 ONLY)	57668	NTR25J-E12K0
R180	315-0102-00			RES,FXD,FILM:1K OHM,5%,0.25W	57668	NTR25JE01K0
R181	315-0150-00			RES,FXD,FILM:15 OHM,5%,0.25W (R181, OPTION 14 ONLY)	19701	5043CX15R00J
R182	315-0101-00			RES,FXD,FILM:100 OHM,5%,0.25W	57668	NTR25J-E 100E
R183	315-0510-00			RES,FXD,FILM:51 OHM,5%,0.25W	19701	5043CX51R00J
R184	315-0101-00			RES,FXD,FILM:100 OHM,5%,0.25W	57668	NTR25J-E 100E
R185	315-0561-00			RES,FXD,FILM:560 OHM,5%,0.25W (R185, OPTION 14 ONLY)	19701	5043CX560R0J
R186	315-0123-00			RES,FXD,FILM:12K OHM,5%,0.25W (R186, OPTION 14 ONLY)	57668	NTR25J-E12K0
R187	321-0356-00			RES,FXD,FILM:49.9K OHM,1%,0.125W,TC=T0	19701	5033ED49K90F
R188	321-0278-00			RES,FXD,FILM:7.68K OHM,1%,0.125W,TC=T0	07716	CEAD76800F
R189	315-0101-00			RES,FXD,FILM:100 OHM,5%,0.25W (R189, OPTION 14 ONLY)	57668	NTR25J-E 100E
R190	315-0150-00			RES,FXD,FILM:15 OHM,5%,0.25W (R190, OPTION 14 ONLY)	19701	5043CX15R00J
R191	315-0102-00			RES,FXD,FILM:1K OHM,5%,0.25W	57668	NTR25JE01K0
R192	315-0101-00			RES,FXD,FILM:100 OHM,5%,0.25W	57668	NTR25J-E 100E
R193	315-0100-00			RES,FXD,FILM:10 OHM,5%,0.25W	19701	5043CX10RR00J
R194	315-0183-00			RES,FXD,FILM:18K OHM,5%,0.25W	19701	5043CX18K00J

Component No.	Tektronix Part No.	Serial/Assembly No. Effective	Dscont	Name & Description	Mfr. Code	Mfr. Part No.
				(R194, OPTION 14 ONLY)		
R195	315-0561-00			RES,FXD,FILM:560 OHM,5%,0.25W	19701	5043CX560R0J
				(R195, OPTION 14 ONLY)		
R196	315-0123-00			RES,FXD,FILM:12K OHM,5%,0.25W	57668	NTR25J-E12K0
				(R196, OPTION 14 ONLY)		
R197	315-0751-00			RES,FXD,FILM:750 OHM,5%,0.25W	57668	NTR25J-E750E
				(R197, OPTION 14 ONLY)		
R198	315-0101-00			RES,FXD,FILM:100 OHM,5%,0.25W	57668	NTR25J-E 100E
				(R198, OPTION 14 ONLY)		
R199	315-0101-00			RES,FXD,FILM:100 OHM,5%,0.25W	57668	NTR25J-E 100E
				(R199, OPTION 14 ONLY)		
R201	315-0101-00	B010100	B010345	RES,FXD,FILM:100 OHM,5%,0.25W	57668	NTR25J-E 100E
R202	315-0242-00			RES,FXD,FILM:2.4K OHM,5%,0.25W	57668	NTR25J-E02K4
R203	315-0823-00			RES,FXD,FILM:82K OHM,5%,0.25W	57668	NTR25J-E82K
R204	315-0222-00			RES,FXD,FILM:2.2K OHM,5%,0.25W	57668	NTR25J-E02K2
R205	315-0243-00			RES,FXD,FILM:24K OHM,5%,0.25W	57668	NTR25J-E24K0
R206	315-0433-00			RES,FXD,FILM:43K OHM,5%,0.25W	19701	5043CX43K00J
R207	315-0243-00			RES,FXD,FILM:24K OHM,5%,0.25W	57668	NTR25J-E24K0
R209	315-0302-00			RES,FXD,FILM:3K OHM,5%,0.25W	57668	NTR25J-E03K0
R211	315-0682-00			RES,FXD,FILM:6.8K OHM,5%,0.25W	57668	NTR25J-E06K8
R212	315-0123-00			RES,FXD,FILM:12K OHM,5%,0.25W	57668	NTR25J-E12K0
R213	315-0823-00			RES,FXD,FILM:82K OHM,5%,0.25W	57668	NTR25J-E82K
R214	315-0684-00			RES,FXD,FILM:680K OHM,5%,0.25W	01121	CB6845
R216	315-0242-00			RES,FXD,FILM:2.4K OHM,5%,0.25W	57668	NTR25J-E02K4
R218	315-0393-00			RES,FXD,FILM:39K OHM,5%,0.25W	57668	NTR25J-E39K0
R218	321-0346-00			RES,FXD,FILM:39.2K OHM,1%,0.125W,TC=T0	19701	5043ED39K20F
				(R218, OPTION 15 ONLY)		
R220	315-0133-00			RES,FXD,FILM:13K OHM,5%,0.25W	19701	5043CX13K00J
R221	321-0393-00			RES,FXD,FILM:121K OHM,1%,0.125W,TC=T0	19701	5043ED121K0F
R222	315-0302-00			RES,FXD,FILM:3K OHM,5%,0.25W	57668	NTR25J-E03K0
R223	315-0912-00			RES,FXD,FILM:9.1K OHM,5%,0.25W	57668	NTR25J-E09K1
R225	315-0164-00			RES,FXD,FILM:160K OHM,5%,0.25W	57668	NTR25J-E160K
R227	315-0433-00			RES,FXD,FILM:43K OHM,5%,0.25W	19701	5043CX43K00J
R228	315-0203-00			RES,FXD,FILM:20K OHM,5%,0.25W	57668	NTR25J-E 20K
R229	321-0428-00			RES,FXD,FILM:280K OHM,1%,0.125W,TC=T0	24546	NA55D2803F
R230	311-1554-00			RES,VAR,NONWW:TRMR,200K OHM,0.5W	32997	3352T-1-204
R231	315-0103-00			RES,FXD,FILM:10K OHM,5%,0.25W	19701	5043CX10K00J
				(634 ONLY)		
R231	315-0103-00	B010100	B071610	RES,FXD,FILM:10K OHM,5%,0.25W	19701	5043CX10K00J
				(OPTION 15 ONLY)		
R231	315-0512-00	B071611		RES,FXD,FILM:5.1K OHM,5%,0.25W	57668	NTR25J-E05K1
				(OPTION 15 ONLY)		
R232	315-0391-00	B010100	B039999	RES,FXD,FILM:390 OHM,5%,0.25W	57668	NTR25J-E390E
R232	321-0155-00	B040000		RES,FXD,FILM:402 OHM,1%,0.125W,TC=T0	07716	CEAD402R0F
R232	315-0680-00			RES,FXD,FILM:68 OHM,5%,0.25W	57668	NTR25J-E68E0
				(R232, OPTION 15 ONLY)		
R234	315-0221-00			RES,FXD,FILM:220 OHM,5%,0.25W	57668	NTR25J-E220E
R235	315-0153-00			RES,FXD,FILM:15K OHM,5%,0.25W	19701	5043CX15K00J
R236	315-0101-00			RES,FXD,FILM:100 OHM,5%,0.25W	57668	NTR25J-E 100E
R237	315-0153-00			RES,FXD,FILM:15K OHM,5%,0.25W	19701	5043CX15K00J
R238	321-0234-00	B010100	B032299	RES,FXD,FILM:2.67K OHM,1%,0.125W,TC=T0	19701	5033ED2K67F
R238	321-0263-00	B032300		RES,FXD,FILM:5.36K OHM,1%,0.125W,TC=T0	07716	CEAD53600F
R240	311-1916-00			RES,VAR,NONWW:TRMR,10K OHM,10%,0.5 W	32997	3386C-T07-103
R241	321-0295-00			RES,FXD,FILM:11.5K OHM,1%,0.125W,TC=T0	07716	CEAD11501F
R242	315-0563-00	B032300		RES,FXD,FILM:56K OHM,5%,0.25W	19701	5043CX56K00J
				(OPTION 15 ONLY)		
R244	321-0263-00	B032300		RES,FXD,FILM:5.36K OHM,1%,0.125W,TC=T0	07716	CEAD53600F
R245	321-0262-00			RES,FXD,FILM:5.23K OHM,1,0.125W,TC=T0	19701	5033ED5K230F
R248	311-1916-00			RES,VAR,NONWW:TRMR,10K OHM,10%,0.5 W	32997	3386C-T07-103
R249	315-0103-00			RES,FXD,FILM:10K OHM,5%,0.25W	19701	5043CX10K00J

Component No.	Tektronix Part No.	Serial/Assembly No. Effective	Dscont	Name & Description	Mfr. Code	Mfr. Part No.
R253	315-0124-00	B010100	B010629	RES,FXD,FILM:120K OHM,5%,0.25W	19701	5043CX120K0J
R253	315-0164-00	B010630		RES,FXD,FILM:160K OHM,5%,0.25W	57668	NTR25J-E160K
R255	321-0355-00			RES,FXD,FILM:48.7K OHM,1%,0.125W,TC=T0	07716	CEAD48701F
R257	315-0433-00			RES,FXD,FILM:43K OHM,5%,0.25W	19701	5043CX43K00J
R258	315-0203-00			RES,FXD,FILM:20K OHM,5%,0.25W	57668	NTR25J-E 20K
R259	315-0753-00			RES,FXD,FILM:75K OHM,5%,0.25W	57668	NTR25J-E75K0
R259	315-0513-00			RES,FXD,FILM:51K OHM,5%,0.25W (R259, OPTION 15 ONLY)	57668	NTR25J-E51K0
R260	311-1556-00			RES,VAR,NONWW:TRMR,50K OHM,0.5W	32997	3352T-DY7-503
R261	315-0103-00			RES,FXD,FILM:10K OHM,5%,0.25W	19701	5043CX10K00J
R262	315-0201-00			RES,FXD,FILM:200 OHM,5%,0.25W	57668	NTR25J-E200E
R264	315-0221-00	B032300		RES,FXD,FILM:220 OHM,5%,0.25W	57668	NTR25J-E220E
R265	315-0153-00			RES,FXD,FILM:15K OHM,5%,0.25W	19701	5043CX15K00J
R266	315-0101-00			RES,FXD,FILM:100 OHM,5%,0.25W	57668	NTR25J-E 100E
R267	315-0153-00			RES,FXD,FILM:15K OHM,5%,0.25W	19701	5043CX15K00J
R268	315-0392-00			RES,FXD,FILM:3.9K OHM,5%,0.25W	57668	NTR25J-E03K9
R270	311-1916-00			RES,VAR,NONWW:TRMR,10K OHM,10%,0.5 W	32997	3386C-T07-103
R271	315-0153-00			RES,FXD,FILM:15K OHM,5%,0.25W	19701	5043CX15K00J
R275	315-0752-00			RES,FXD,FILM:7.5K OHM,5%,0.25W	57668	NTR25J-E07K5
R278	311-1916-00			RES,VAR,NONWW:TRMR,10K OHM,10%,0.5 W	32997	3386C-T07-103
R279	315-0472-00			RES,FXD,FILM:4.7K OHM,5%,0.25W	57668	NTR25J-E04K7
R280	311-1559-00	B032300		RES,VAR,NONWW:TRMR,10K OHM,0.5W	32997	3352T-1-103
R281	321-0344-00	B010100	B032299	RES,FXD,FILM:37.4K OHM,1%,0.125W,TC=T0	19701	5033ED 37K40F
R281	321-0338-00	B032300		RES,FXD,FILM:32.4K OHM,1%,0.125W,TC=T0	19701	5033ED32K40F
R282	321-0397-00			RES,FXD,FILM:133K OHM,1%,0.125W,TC=T0	19701	5043ED133K0F
R283	321-0312-00			RES,FXD,FILM:17.4K OHM,1%,0.125W,TC=T0	19701	5033ED17K40F
R284	321-0385-00			RES,FXD,FILM:100K OHM,1%,0.125W,TC=T0	19701	5033ED100K0F
R291	315-0510-00			RES,FXD,FILM:51 OHM,5%,0.25W	19701	5043CX51R00J
R292	315-0510-00	B010100	B059698	RES,FXD,FILM:51 OHM,5%,0.25W	19701	5043CX51R00J
R292	315-0221-00	B059699		RES,FXD,FILM:220 OHM,5%,0.25W	57668	NTR25J-E220E
R293	315-0510-00			RES,FXD,FILM:51 OHM,5%,0.25W	19701	5043CX51R00J
R296	315-0220-00			RES,FXD,FILM:22 OHM,5%,0.25W	19701	5043CX22R00J
R298	315-0220-00			RES,FXD,FILM:22 OHM,5%,0.25W (634 ONLY)	19701	5043CX22R00J
R298	315-0220-00	B010100	B071610	RES,FXD,FILM:22 OHM,5%,0.25W (OPTION 15 ONLY)	19701	5043CX22R00J
R298	131-0566-00	B071611		BUS,CONDUCTOR:DUMMY RES,0.094 OD X 0.225 L (OPTION 15 ONLY)	24546	OMA 07
R302	311-1559-00	B032451		RES,VAR,NONWW:TRMR,10K OHM,0.5W	32997	3352T-1-103
R304	315-0623-00	B032451		RES,FXD,FILM:62K OHM,5%,0.25W	19701	5043CX62K00J
R304	315-0473-00	B032451		RES,FXD,FILM:47K OHM,5%,0.25W (OPTION 15 ONLY)	57668	NTR25J-E47K0
R305	315-0474-00	B032451		RES,FXD,FILM:470K OHM,5%,0.25W	19701	5043CX470K0J92U
R305	315-0224-00	B032451		RES,FXD,FILM:220K OHM,5%,0.25W (OPTION 15 ONLY)	57668	NTR25J-E220K
R307	315-0362-00			RES,FXD,FILM:3.6K OHM,5%,0.25W	19701	5043CX3K600J
R308	315-0133-00			RES,FXD,FILM:13K OHM,5%,0.25W	19701	5043CX13K00J
R309	315-0511-00			RES,FXD,FILM:510 OHM,5%,0.25W	19701	5043CX510R0J
R309	315-0122-00			RES,FXD,FILM:1.2K OHM,5%,0.25W (R309, OPTION 15 ONLY)	57668	NTR25J-E01K2
R310	311-1563-00			RES,VAR,NONWW:TRMR,1K OHM,0.5W	32997	3352T-DY7-102
R312	308-0685-00			RES,FXD,WW:1.5 OHM,5%,1W	75042	BW-20-1R500J
R312	308-0767-00			RES,FXD,WW:1.1 OHM,5%,1W (R312, OPTION 15 ONLY)	75042	BW-20-1R100J
R313	315-0391-00			RES,FXD,FILM:390 OHM,5%,0.25W	57668	NTR25J-E390E
R314	315-0513-00			RES,FXD,FILM:51K OHM,5%,0.25W	57668	NTR25J-E51K0
R315	311-1556-00			RES,VAR,NONWW:TRMR,50K OHM,0.5W	32997	3352T-DY7-503
R316	315-0102-00			RES,FXD,FILM:1K OHM,5%,0.25W	57668	NTR25JE01K0
R317	315-0272-00			RES,FXD,FILM:2.7K OHM,5%,0.25W	57668	NTR25J-E02K7

Component No.	Tektronix Part No.	Serial/Assembly No. Effective	Dscont	Name & Description	Mfr. Code	Mfr. Part No.
R318	315-0202-00			RES,FXD,FILM:2K OHM,5%,0.25W	57668	NTR25J-E 2K
R319	315-0241-00			RES,FXD,FILM:240 OHM,5%,0.25W	19701	5043CX240R0J
R320	315-0271-00			RES,FXD,FILM:270 OHM,5%,0.25W	57668	NTR25J-E270E
R322	315-0512-00			RES,FXD,FILM:5.1K OHM,5%,0.25W	57668	NTR25J-E05K1
R323	315-0101-00			RES,FXD,FILM:100 OHM,5%,0.25W	57668	NTR25J-E 100E
R324	315-0332-00			RES,FXD,FILM:3.3K OHM,5%,0.25W	57668	NTR25J-E03K3
R325	315-0623-00			RES,FXD,FILM:62K OHM,5%,0.25W	19701	5043CX62K00J
R326	315-0330-00			RES,FXD,FILM:33 OHM,5%,0.25W	19701	5043CX33R00J
R327	315-0101-00			RES,FXD,FILM:100 OHM,5%,0.25W	57668	NTR25J-E 100E
R328	315-0124-00			RES,FXD,FILM:120K OHM,5%,0.25W	19701	5043CX120K0J
R329	315-0332-00			RES,FXD,FILM:3.3K OHM,5%,0.25W	57668	NTR25J-E03K3
R329	315-0242-00			RES,FXD,FILM:2.4K OHM,5%,0.25W (R329, OPTION 15 ONLY)	57668	NTR25J-E02K4
R330	307-0057-00			RES,FXD,CMPSN:5.1 OHM,5%,0.5W	01121	EB51G5
R331	307-0057-00			RES,FXD,CMPSN:5.1 OHM,5%,0.5W	01121	EB51G5
R334	315-0132-00	B010100	B049597	RES,FXD,FILM:1.3K OHM,5%,0.25W	57668	NTR25J-E01K3
R334	315-0471-03			RES,FXD,CMPSN:470 OHM,5%,0.25W (R334, OPTION 15 ONLY)	01121	CB4715
R335	315-0132-00	B010100	B049597	RES,FXD,FILM:1.3K OHM,5%,0.25W	57668	NTR25J-E01K3
R335	315-0471-00			RES,FXD,FILM:470 OHM,5%,0.25W (R335, OPTION 15 ONLY)	57668	NTR25J-E470E
R339	315-0123-00			RES,FXD,FILM:12K OHM,5%,0.25W	57668	NTR25J-E12K0
R340	311-1556-00			RES,VAR,NONWW:TRMR,50K OHM,0.5W	32997	3352T-DY7-503
R341	315-0223-00			RES,FXD,FILM:22K OHM,5%,0.25W	19701	5043CX22K00J92U
R342	315-0363-00			RES,FXD,FILM:36K OHM,5%,0.25W	57668	NTR25J-E36K0
R345	311-1556-00			RES,VAR,NONWW:TRMR,50K OHM,0.5W	32997	3352T-DY7-503
R346	315-0683-00			RES,FXD,FILM:68K OHM,5%,0.25W	57668	NTR25J-E68K0
R350	315-0683-00			RES,FXD,FILM:68K OHM,5%,0.25W	57668	NTR25J-E68K0
R351	315-0471-00			RES,FXD,FILM:470 OHM,5%,0.25W	57668	NTR25J-E470E
R352	315-0120-00	B010100	B032450	RES,FXD,FILM:12 OHM,5%,0.25W	57668	NTR25J-R12
R352	315-0120-01	B032451		RES,FXD,CMPSN:12 OHM,5%,0.25W	01121	CB1205
R352	307-0103-00	B010100	M071610	RES,FXD,CMPSN:2.7 OHM,5%,0.25W (OPTION 15 ONLY)	01121	CB27G5
R352	307-0051-00	B071611		RES,FXD,CMPSN:2.7 OHM,5%,0.5W (OPTION 15 ONLY)	01121	EB27G5
R353	315-0510-00	B010100	B039999	RES,FXD,FILM:51 OHM,5%,0.25W	19701	5043CX51R00J
R353	315-0100-00	B040000		RES,FXD,FILM:10 OHM,5%,0.25W	19701	5043CX10RR00J
R355	311-1559-00			RES,VAR,NONWW:TRMR,10K OHM,0.5W	32997	3352T-1-103
R356	315-0472-00			RES,FXD,FILM:4.7K OHM,5%,0.25W	57668	NTR25J-E04K7
R357	315-0681-00			RES,FXD,FILM:680 OHM,5%,0.25W	57668	NTR25J-E680E
R357	315-0681-00	B010100	B032450	RES,FXD,FILM:680 OHM,5%,0.25W (OPTION 15 ONLY)	57668	NTR25J-E680E
R357	315-0122-00	B032451		RES,FXD,FILM:1.2K OHM,5%,0.25W (OPTION 15 ONLY)	57668	NTR25J-E01K2
R358	315-0472-00			RES,FXD,FILM:4.7K OHM,5%,0.25W	57668	NTR25J-E04K7
R359	315-0100-00			RES,FXD,FILM:10 OHM,5%,0.25W	19701	5043CX10RR00J
R360	315-0181-00			RES,FXD,FILM:180 OHM,5%,0.25W	57668	NTR25J-E180E
R361	315-0181-00			RES,FXD,FILM:180 OHM,5%,0.25W	57668	NTR25J-E180E
R362	315-0101-00			RES,FXD,FILM:100 OHM,5%,0.25W	57668	NTR25J-E 100E
R363	315-0472-00			RES,FXD,FILM:4.7K OHM,5%,0.25W	57668	NTR25J-E04K7
R364	315-0101-00			RES,FXD,FILM:100 OHM,5%,0.25W	57668	NTR25J-E 100E
R365	315-0471-03			RES,FXD,CMPSN:470 OHM,5%,0.25W	01121	CB4715
R366	315-0470-00	B032451		RES,FXD,FILM:47 OHM,5%,0.25W	57668	NTR25J-E47E0
R366	315-0470-00			RES,FXD,FILM:47 OHM,5%,0.25W (R366, OPTION 15 ONLY)	57668	NTR25J-E47E0
R371	315-0103-00			RES,FXD,FILM:10K OHM,5%,0.25W	19701	5043CX10K00J
R372	315-0183-00			RES,FXD,FILM:18K OHM,5%,0.25W	19701	5043CX18K00J
R373	315-0100-00			RES,FXD,FILM:10 OHM,5%,0.25W	19701	5043CX10RR00J
R374	315-0301-00			RES,FXD,FILM:300 OHM,5%,0.25W	57668	NTR25J-E300E

Component No.	Tektronix Part No.	Serial/Assembly No. Effective	Dscont	Name & Description	Mfr. Code	Mfr. Part No.
R375	311-1560-00			RES,VAR,NONWW:TRMR,5K OHM,0.5W	32997	3352T-1-502
R376	321-0312-00			RES,FXD,FILM:17.4K OHM,1%,0.125W,TC=T0	19701	5033ED17K40F
R376	321-0283-00			RES,FXD,FILM:8.66K OHM,1%,0.125W,TC=T0 (R376, OPTION 15 ONLY)	19701	5043ED8K660F
R379	315-0272-00	B010100	B060358	RES,FXD,FILM:2.7K OHM,5%,0.25W	57668	NTR25J-E02K7
R379	321-0234-00	B060359		RES,FXD,FILM:2.67K OHM,1%,0.125W,TC=T0	19701	5033ED2K67F
R380	315-0242-00	B010100	B032450	RES,FXD,FILM:2.4K OHM,5%,0.25W	57668	NTR25J-E02K4
R380	315-0202-00	B032451	B060358	RES,FXD,FILM:2K OHM,5%,0.25W	57668	NTR25J-E 2K
R380	321-0228-00	B060359		RES,FXD,FILM:2.32K OHM,1%,0.125W,TC=T0	19701	5043ED2K32F
R381	315-0683-00			RES,FXD,FILM:68K OHM,5%,0.25W	57668	NTR25J-E68K0
R381	315-0473-00			RES,FXD,FILM:47K OHM,5%,0.25W (R381, OPTION 15 ONLY)	57668	NTR25J-E47K0
R382	315-0472-00			RES,FXD,FILM:4.7K OHM,5%,0.25W	57668	NTR25J-E04K7
R382	315-0103-00			RES,FXD,FILM:10K OHM,5%,0.25W (R382, OPTION 15 ONLY)	19701	5043CX10K00J
R384	315-0102-00	B010100	B060358	RES,FXD,FILM:1K OHM,5%,0.25W	57668	NTR25JE01K0
R384	315-0202-00	B060359		RES,FXD,FILM:2K OHM,5%,0.25W	57668	NTR25J-E 2K
R385	315-0682-00	B010100	B060358	RES,FXD,FILM:6.8K OHM,5%,0.25W	57668	NTR25J-E06K8
R385	315-0100-00	B060359		RES,FXD,FILM:10 OHM,5%,0.25W	19701	5043CX10RR00J
R385	315-0182-00			RES,FXD,FILM:1.8K OHM,5%,0.25W (R385, OPTION 15 ONLY)	57668	NTR25J-E1K8
R386	315-0100-00	B010100	B032450	RES,FXD,FILM:10 OHM,5%,0.25W	19701	5043CX10RR00J
R386	315-0101-00	B032451	B059698	RES,FXD,FILM:100 OHM,5%,0.25W	57668	NTR25J-E 100E
R386	301-0101-00	B059699		RES,FXD,FILM:100 OHM,5%,0.5W	01121	EB1015
R387	315-0102-00			RES,FXD,FILM:1K OHM,5%,0.25W	57668	NTR25JE01K0
R390	315-0470-00			RES,FXD,FILM:47 OHM,5%,0.25W	57668	NTR25J-E47E0
R393	315-0103-00			RES,FXD,FILM:10K OHM,5%,0.25W	19701	5043CX10K00J
R394	315-0104-00			RES,FXD,FILM:100K OHM,5%,0.25W	57668	NTR25J-E100K
R395	315-0153-00			RES,FXD,FILM:15K OHM,5%,0.25W	19701	5043CX15K00J
R396	315-0103-00			RES,FXD,FILM:10K OHM,5%,0.25W	19701	5043CX10K00J
R397	315-0101-00			RES,FXD,FILM:100 OHM,5%,0.25W	57668	NTR25J-E 100E
R398	315-0103-00			RES,FXD,FILM:10K OHM,5%,0.25W	19701	5043CX10K00J
R401	307-0103-00			RES,FXD,CMPSN:2.7 OHM,5%,0.25W	01121	CB27G5
R402	315-0510-00			RES,FXD,FILM:51 OHM,5%,0.25W	19701	5043CX51R00J
R403	315-0101-00			RES,FXD,FILM:100 OHM,5%,0.25W	57668	NTR25J-E 100E
R413	315-0242-00			RES,FXD,FILM:2.4K OHM,5%,0.25W	57668	NTR25J-E02K4
R414	315-0104-00			RES,FXD,FILM:100K OHM,5%,0.25W	57668	NTR25J-E100K
R415	308-0767-00			RES,FXD,WW:1.1 OHM,5%,1W	75042	BW-20-1R100J
R417	315-0472-00			RES,FXD,FILM:4.7K OHM,5%,0.25W	57668	NTR25J-E04K7
R421	308-0793-00	B010100	B059698	RES,FXD,WW:0.51 OHM,5%,1W	75042	BW20 .51OHM 5%
R421	308-0679-00	B059699		RES,FXD,WW:0.51 OHM,5%,2W	75042	BWH 0.51 OHM 5%
R421	308-0710-00			RES,FXD,WW:0.27 OHM,5%,1W (R421, OPTION 15 ONLY)	75042	BW-20-R270OJ
R426	315-0100-00			RES,FXD,FILM:10 OHM,5%,0.25W	19701	5043CX10RR00J
R427	315-0471-00			RES,FXD,FILM:470 OHM,5%,0.25W	57668	NTR25J-E470E
R435	311-2000-00			RES,VAR,NONWW:TRMR,5M OHM,20%,0.25W	58756	MODEL 201
R436	301-0335-00			RES,FXD,FILM:3.3M OHM,5%,0.50W	19701	5053CX3M300J
R437	301-0335-00			RES,FXD,FILM:3.3M OHM,5%,0.50W	19701	5053CX3M300J
R438	315-0104-00	B040000		RES,FXD,FILM:100K OHM,5%,0.25W	57668	NTR25J-E100K
R439	301-0300-00			RES,FXD,FILM:30 OHM,5%,0.5W	19701	5053CX30R00J
R440	315-0153-00	B059699		RES,FXD,FILM:15K OHM,5%,0.25W	19701	5043CX15K00J
R442	315-0470-00			RES,FXD,FILM:47 OHM,5%,0.25W	57668	NTR25J-E47E0
R447	315-0223-00			RES,FXD,FILM:22K OHM,5%,0.25W	19701	5043CX22K00J92U
R448	315-0245-00			RES,FXD,FILM:2.4M OHM,5%,0.25W	01121	CB2455
R449	315-0224-00			RES,FXD,FILM:220K OHM,5%,0.25W	57668	NTR25J-E220K
R453	315-0223-00			RES,FXD,FILM:22K OHM,5%,0.25W	19701	5043CX22K00J92U
R454	315-0105-00			RES,FXD,FILM:1M OHM,5%,0.25W	19701	5043CX1M000J
R455	311-1916-00			RES,VAR,NONWW:TRMR,10K OHM,10%,0.5 W	32997	3386C-T07-103
R466	315-0103-00			RES,FXD,FILM:10K OHM,5%,0.25W	19701	5043CX10K00J

Component No.	Tektronix Part No.	Serial/Assembly No. Effective	Dscont	Name & Description	Mfr. Code	Mfr. Part No.
R467	315-0472-00			RES,FXD,FILM:4.7K OHM,5%,0.25W	57668	NTR25J-E04K7
R469	315-0103-00			RES,FXD,FILM:10K OHM,5%,0.25W	19701	5043CX10K00J
R470	315-0102-00			RES,FXD,FILM:1K OHM,5%,0.25W	57668	NTR25JE01K0
R472	315-0202-00			RES,FXD,FILM:2K OHM,5%,0.25W	57668	NTR25J-E 2K
R474	315-0202-00			RES,FXD,FILM:2K OHM,5%,0.25W	57668	NTR25J-E 2K
R475	315-0153-00			RES,FXD,FILM:15K OHM,5%,0.25W	19701	5043CX15K00J
R477	315-0102-00			RES,FXD,FILM:1K OHM,5%,0.25W	57668	NTR25JE01K0
R478	315-0623-00			RES,FXD,FILM:62K OHM,5%,0.25W	19701	5043CX62K00J
R479	315-0104-00			RES,FXD,FILM:100K OHM,5%,0.25W	57668	NTR25J-E100K
R480	303-0222-00			RES,FXD,CMPSN:2.2K OHM,5%,1W	01121	GB2225
R481	315-0101-00			RES,FXD,FILM:100 OHM,5%,0.25W	57668	NTR25J-E 100E
R532	315-0103-00			RES,FXD,FILM:10K OHM,5%,0.25W	19701	5043CX10K00J
R542	315-0103-00			RES,FXD,FILM:10K OHM,5%,0.25W	19701	5043CX10K00J
R562	315-0103-00			RES,FXD,FILM:10K OHM,5%,0.25W	19701	5043CX10K00J
R602	321-0085-00			RES,FXD,FILM:75 OHM,1%,0.125W,TC=T0 (R602, OPTION 20 ONLY)	57668	CRB14FXE 75 OHM
R704	315-0243-00			RES,FXD,FILM:24K OHM,5%,0.25W (R704, OPTION 13 ONLY)	57668	NTR25J-E24K0
R706	315-0103-00			RES,FXD,FILM:10K OHM,5%,0.25W (R706, OPTION 13 ONLY)	19701	5043CX10K00J
R707	315-0104-00			RES,FXD,FILM:100K OHM,5%,0.25W (R707, OPTION 13 ONLY)	57668	NTR25J-E100K
R710	315-0333-00			RES,FXD,FILM:33K OHM,5%,0.25W (R710, OPTION 13 ONLY)	57668	NTR25J-E33K0
R711	315-0393-00			RES,FXD,FILM:39K OHM,5%,0.25W (R711, OPTION 13 ONLY)	57668	NTR25J-E39K0
R715	311-1560-00			RES,VAR,NONWW:TRMR,5K OHM,0.5W (R715, OPTION 13 ONLY)	32997	3352T-1-502
R716	315-0113-00			RES,FXD,FILM:11K OHM,5%,0.25W (R716, OPTION 13 ONLY)	19701	5043CX11K00J
R717	315-0102-00			RES,FXD,FILM:1K OHM,5%,0.25W (R717, OPTION 13 ONLY)	57668	NTR25JE01K0
R719	315-0361-00			RES,FXD,FILM:360 OHM,5%,0.25W (R719, OPTION 13 ONLY)	19701	5043CX360R0J
R730	315-0333-00			RES,FXD,FILM:33K OHM,5%,0.25W (R730, OPTION 13 ONLY)	57668	NTR25J-E33K0
R731	315-0393-00			RES,FXD,FILM:39K OHM,5%,0.25W (R731, OPTION 13 ONLY)	57668	NTR25J-E39K0
R732	315-0101-00			RES,FXD,FILM:100 OHM,5%,0.25W (R732, OPTION 13 ONLY)	57668	NTR25J-E 100E
R735	311-1888-00			RES,VAR,NONWW:PNL,20K OHM,1W (R735, OPTION 13 ONLY)	01121	14M871
R750	311-1888-00			RES,VAR,NONWW:PNL,20K OHM,1W (R750, OPTION 13 ONLY)	01121	14M871
R755	311-1888-00			RES,VAR,NONWW:PNL,20K OHM,1W (R755, OPTION 13 ONLY)	01121	14M871
R770	315-0750-00			RES,FXD,FILM:75 OHM,5%,0.25W (R770, OPTION 13 ONLY)	57668	NTR25J-E75E0
R802	315-0273-00			RES,FXD,FILM:27K OHM,5%,0.25W (R802, OPTION 15 ONLY)	57668	NTR25J-E27K0
R805	315-0752-00			RES,FXD,FILM:7.5K OHM,5%,0.25W (R805, OPTION 15 ONLY)	57668	NTR25J-E07K5
R811	315-0103-00			RES,FXD,FILM:10K OHM,5%,0.25W (R811, OPTION 15 ONLY)	19701	5043CX10K00J
R812	311-1917-00			RES,VAR,NONWW:TRMR,5K OHM,10%,0.5 W (R812, OPTION 15 ONLY)	32997	3386C-T07-502
R814	315-0513-00			RES,FXD,FILM:51K OHM,5%,0.25W (R814, OPTION 15 ONLY)	57668	NTR25J-E51K0
R816	315-0242-00			RES,FXD,FILM:2.4K OHM,5%,0.25W (R816, OPTION 15 ONLY)	57668	NTR25J-E02K4
RV72	307-0638-00	B020000		RES,V SENSITIVE:18V,20%,0.5 W	03508	MOV-V18ZA1

Component No.	Tektronix Part No.	Serial/Assembly No. Effective	Dscont	Name & Description	Mfr. Code	Mfr. Part No.
RV73	307-0638-00	B020000		RES,V SENSITIVE:18V,20%,0.5 W	03508	MOV-V18ZA1
RV92	307-0638-00	B020000		RES,V SENSITIVE:18V,20%,0.5 W	03508	MOV-V18ZA1
RV437	307-0415-00	B020000		RES,V SENSITIVE:DISC	03508	V130LA10A
RV454	307-0638-00	B020000		RES,V SENSITIVE:18V,20%,0.5 W	03508	MOV-V18ZA1
S102	260-1833-00			SWITCH,SLIDE:DPDT,0.05A,125V	82389	11P-1092
S124	260-1811-00			SWITCH,SLIDE:DPDT,0.5A,125VAC-DC	82389	11P-1137
S512	260-0724-00			SWITCH,THRMSTC:NC,OPEN 83.3,CL 66.7,10A (S512, REMOVE FOR OPTION 20)	93410	430-367
S515	260-1222-00			SWITCH,PP:DPDT,40A,250AC,PUSH-PULL (S515, REMOVE FOR OPTION 20)	01963	E79-96A
S602	260-1833-00			SWITCH,SLIDE:DPDT,0.05A,125V (OPTION 20 ONLY)	82389	11P-1092
S705	260-1811-00			SWITCH,SLIDE:DPDT,0.5A,125VAC-DC (S705, OPTION 13 ONLY)	82389	11P-1137
T353	120-1232-00			TRANSFORMER,RF:FLYBACK	80009	120-1232-00
T390	120-1197-00			TRANSFORMER,RF:BASE DRIVE	80009	120-1197-00
T390	120-1242-00			TRANSFORMER,RF:BASE DRIVE (T390, OPTION 15 ONLY)	80009	120-1242-00
T410	120-1195-00	B010100	B071365	XFMR,PWR,SDN&SU:HIGH VOLTAGE	80009	120-1195-00
T410	120-1195-01	B071366		TRANSFORMER,RF:HIGH VOLTAGE	80009	120-1195-01
T530	120-1194-00	B010100	B048899	XFMR,PWR,STPDN: (T530, REMOVE FOR OPTION 20)	80009	120-1194-00
T530	120-1194-01	B048900		XFMR,PWR,STPDN: (T530, REMOVE FOR OPTION 20)	80009	120-1194-01
U150	155-0032-01			MICROCKT,LINEAR:PLRT INV & TRIG PICK-OFF	80009	155-0032-01
U215	156-0487-02			MICROCKT,DGTL:DUAL RETRIG,MONO MV,SCRN	07263	96L02PCQR
U225	156-0487-02			MICROCKT,DGTL:DUAL RETRIG,MONO MV,SCRN	07263	96L02PCQR
U245	156-1191-00			MICROCKT,LINEAR:DUAL BI-FET OPNL AMPL	01295	TL072CP
U280	155-0152-00	B010100	B032299	MICROCKT,LINEAR:GEOMETRY & FOCUS CORRECTION	80009	155-0152-00
U280	155-0152-01	B032300		MICROCKT,LINEAR:GEOMETRY & FOCUS CORRECTION	80009	155-0152-01
U350	156-0067-00	B010100	B032530	MICROCKT,LINEAR:OPNL AMPL,SEL	04713	MC1741CP1
U350	156-0067-01	B032531		MICROCKT,LINEAR:OPNL AMPL,CHECKED	04713	MC1741CP1DS
U360	156-0067-00	B010100	B032530	MICROCKT,LINEAR:OPNL AMPL,SEL	04713	MC1741CP1
U360	156-0067-01	B032531		MICROCKT,LINEAR:OPNL AMPL,CHECKED	04713	MC1741CP1DS
U380	156-1147-00			MICROCKT,LINEAR:TV HORIZ PROCESSOR	02735	CA1391E
U432	119-1041-00			MULTIPLIER,HV:5X,18KVDC,2.35KV RECTIFIER	80009	119-1041-00
U445	156-0067-00	B010100	B032530	MICROCKT,LINEAR:OPNL AMPL,SEL	04713	MC1741CP1
U445	156-0067-01	B032531		MICROCKT,LINEAR:OPNL AMPL,CHECKED	04713	MC1741CP1DS
U470	156-0464-02			MICROCKT,DGTL:DUAL 4-INP NAND GATE	01295	SN74LS20NP3
U533	156-0312-00			MICROCKT,LINEAR:VOLTAGE REGULATOR	04713	MC7815CT
U543	156-0527-00			MICROCKT,LINEAR:VOLTAGE REGULATOR	01295	UA7915CKC
U563	156-0277-00			MICROCKT,LINEAR:VOLTAGE REGULATOR	04713	LM340T-5.0
U705	156-0381-02			MICROCKT,DGTL:QUAD 2-INP EXCL OR GATE	07263	74LS86PCQR
V485	154-0799-00	B010100	B047638	ELECTRON TUBE:CRT,P45 (STANDARD AND OPTION 1 ONLY)	80009	154-0799-00
V485	154-0799-00	B047639	B071316	ELECTRON TUBE:CRT,P45 (STANDARD ONLY)	80009	154-0799-00
V485	154-0860-00	B071317		ELECTRON TUBE: (STANDARD ONLY)	80009	154-0860-00
V485	154-0799-10	B047639	B071520	ELECTRON TUBE:FINISHED T6340-45(634 OPT1) (OPTION 1 ONLY)	80009	154-0799-10
V485	154-0860-10	B071521		ELECTRON TUBE: (OPTION 1 ONLY)	80009	154-0860-10
V485	154-0800-00			ELECTRON TUBE:CRT,P4 (OPTION 74 ONLY)	80009	154-0800-00
VR13	152-0166-00			SEMICOND DVC,DI:ZEN,SI,6.2V,5%,400MW,DO-7	04713	SZ11738RL
VR147	152-0166-00	B010100	B019999	SEMICOND DVC,DI:ZEN,SI,6.2V,5%,400MW,DO-7	04713	SZ11738RL
VR147	152-0461-00	B020000		SEMICOND DVC,DI:ZEN,SI,6.2V,5%,0.4W,DO-7	04713	SZG25002K2
VR175	152-0294-00			SEMICOND DVC,DI:ZEN,SI,36V,5%,1W,A31A (VR175, OPTION 14 ONLY)	04713	1N3033B
VR176	152-0294-00			SEMICOND DVC,DI:ZEN,SI,36V,5%,1W,A31A	04713	1N3033B

Component No.	Tektronix Part No.	Serial/Assembly No. Effective	Dscont	Name & Description	Mfr. Code	Mfr. Part No.
				(VR176, OPTION 14 ONLY)		
VR180	152-0166-00			SEMICOND DVC,DI:ZEN,SI,6.2V,5%,400MW,DO-7	04713	SZ11738RL
VR181	152-0217-00	B010100	B071749	SEMICOND DVC,DI:ZEN,SI,8.2V,5%,0.4W,DO-7	04713	SZG20
VR181	152-0590-00	B071750		SEMICOND DVC,DI:ZEN,SI,18V,5%,400MW	12954	1N967B
VR183	152-0395-00			SEMICOND DVC,DI:ZEN,SI,4.3V,5%,0.4W	04713	SZG35009K18
				(VR183, OPTION 14 ONLY)		
VR187	152-0166-00			SEMICOND DVC,DI:ZEN,SI,6.2V,5%,400MW,DO-7	04713	SZ11738RL
				(VR187, OPTION 14 ONLY)		
VR222	152-0195-00			SEMICOND DVC,DI:ZEN,SI,5.1V,5%,0.4W,DO-7	04713	SZ11755RL
VR413	152-0229-00	B010100	B045508	SEMICOND DVC,DI:ZEN,SI,39V,5%,1W,A31A	04713	SZM25000K3
VR413	152-0294-00	B045509		SEMICOND DVC,DI:ZEN,SI,36V,5%,1W,A31A	04713	1N3033B
VR413	152-0229-00			SEMICOND DVC,DI:ZEN,SI,39V,5%,1W,A31A	04713	SZM25000K3
				(OPTION 15 ONLY)		
VR439	152-0286-00	B059699		SEMICOND DVC,DI:ZEN,SI,75V,5%,0.4W,DO-7	14552	1N982B
VR467	152-0055-00			SEMICOND DVC,DI:ZEN,SI,11V,5%,0.4W,DO-7	14433	Z5407

DIAGRAMS AND CIRCUIT BOARD ILLUSTRATIONS

Symbols and Reference Designators

Electrical components shown on the diagrams are in the following units unless noted otherwise:

Capacitors	=	Values one or greater are in picofarads (pF). Values less than one are in microfarads (μF).
Resistors	=	Ohms (Ω).

Symbols used on the diagrams are based on ANSI Standard Y32.2-1975.

Logic symbology is based on ANSI Y32.14-1973 in terms of positive logic. Logic symbols depict the logic function performed and may differ from the manufacturer's data.

The following prefix letters are used as reference designators to identify components or assemblies on the diagrams.

A	Assembly, separable or repairable (circuit board, etc.)	H	Heat dissipating device (heat sink, heat radiator, etc.)	RT	Thermistor
AT	Attenuator, fixed or variable	HR	Heater	S	Switch
B	Motor	HY	Hybrid circuit	T	Transformer
BT	Battery	J	Connector, stationary portion	TC	Thermocouple
C	Capacitor, fixed or variable	K	Relay	TP	Test point
CB	Circuit breaker	L	Inductor, fixed or variable	U	Assembly, inseparable or non-repairable (integrated circuit, etc.)
CR	Diode, signal or rectifier	LR	Inductor/resistor combination	V	Electron tube
DL	Delay line	M	Meter	VR	Voltage regulator (zener diode, etc.)
DS	Indicating device (lamp)	P	Connector, movable portion	Y	Crystal
E	Spark Gap	Q	Transistor or silicon-controlled rectifier	Z	Phase shifter
F	Fuse	R	Resistor, fixed or variable		
FL	Filter				

The following special symbols are used on the diagrams:

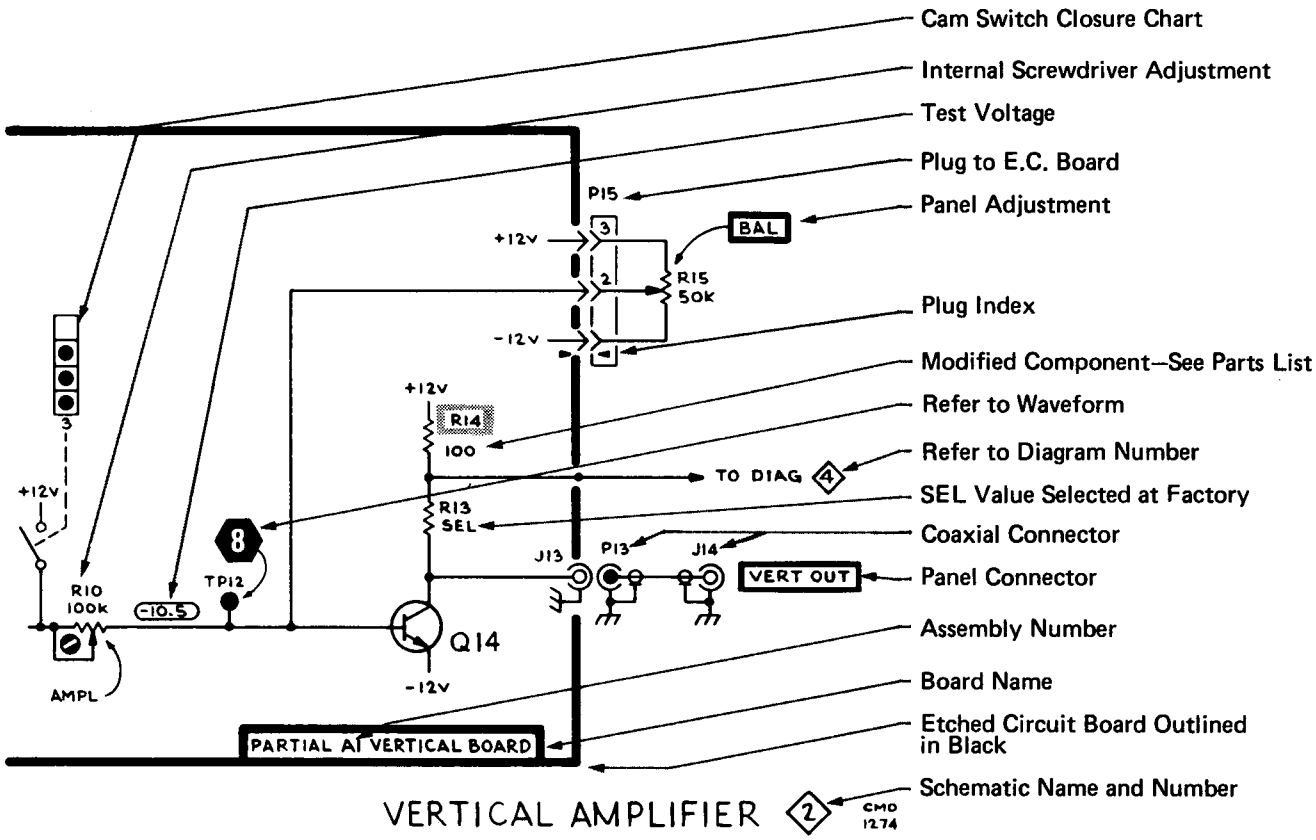

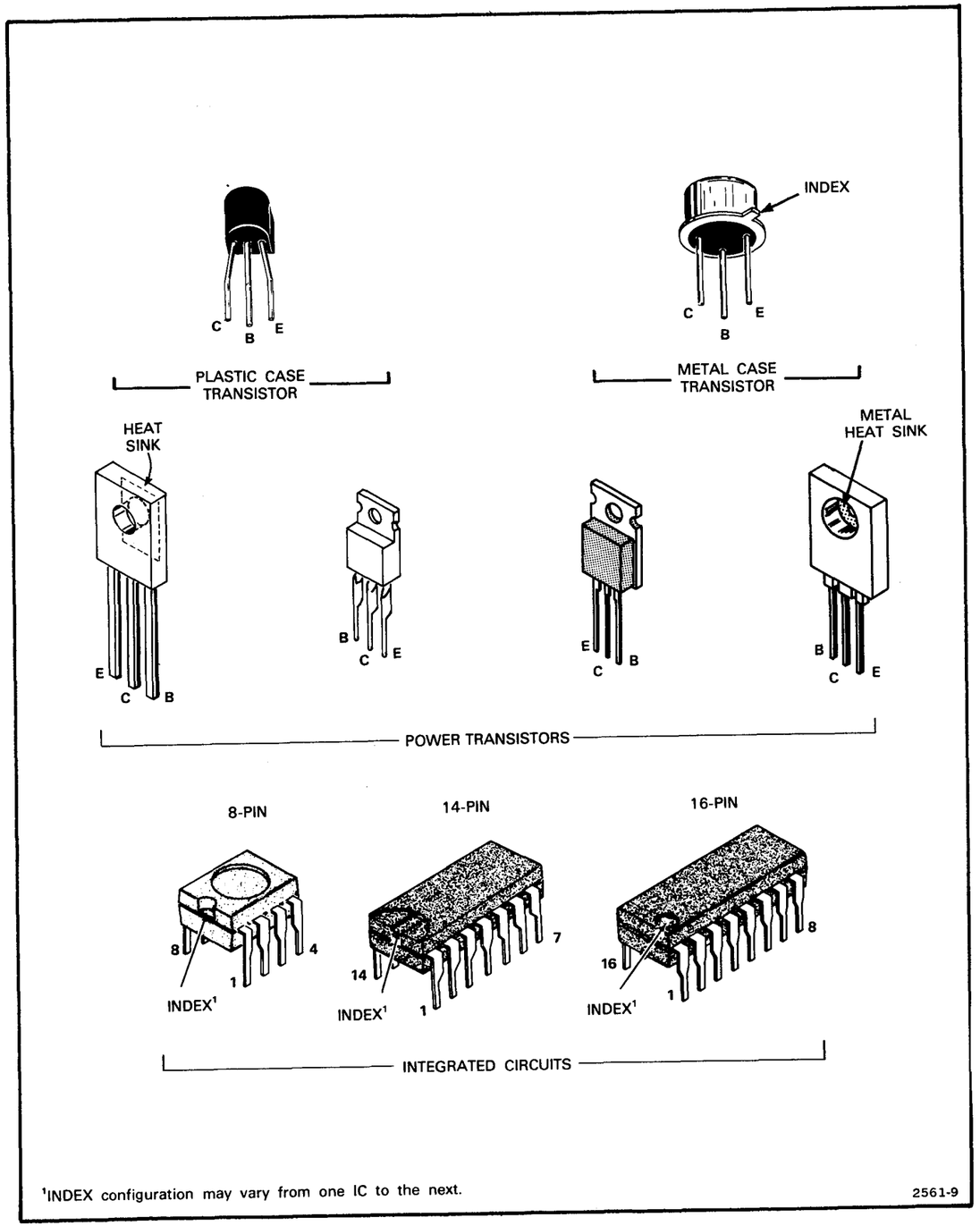

Figure 9-1. Semiconductor lead configurations.

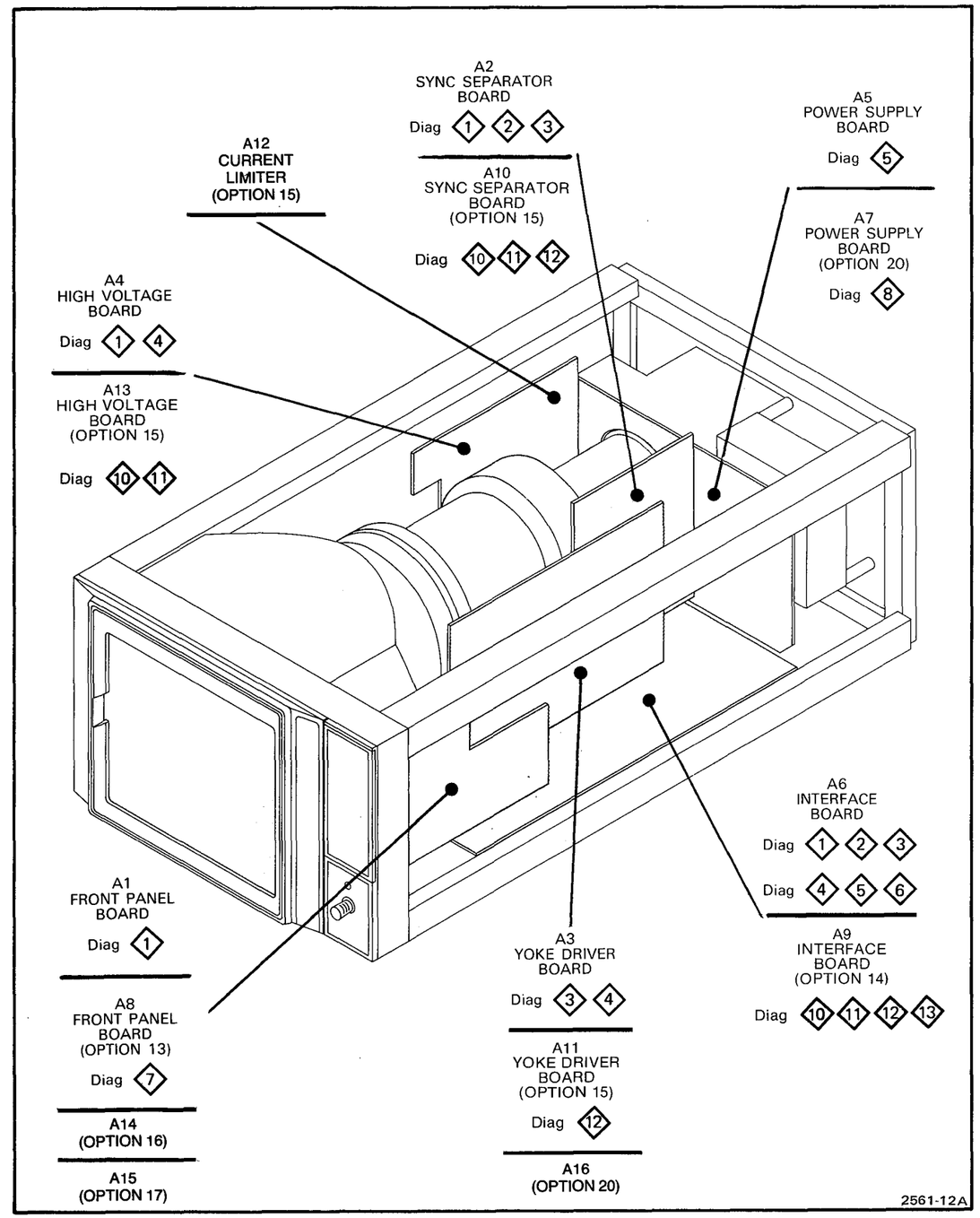

Figure 9-2. Circuit board locations.

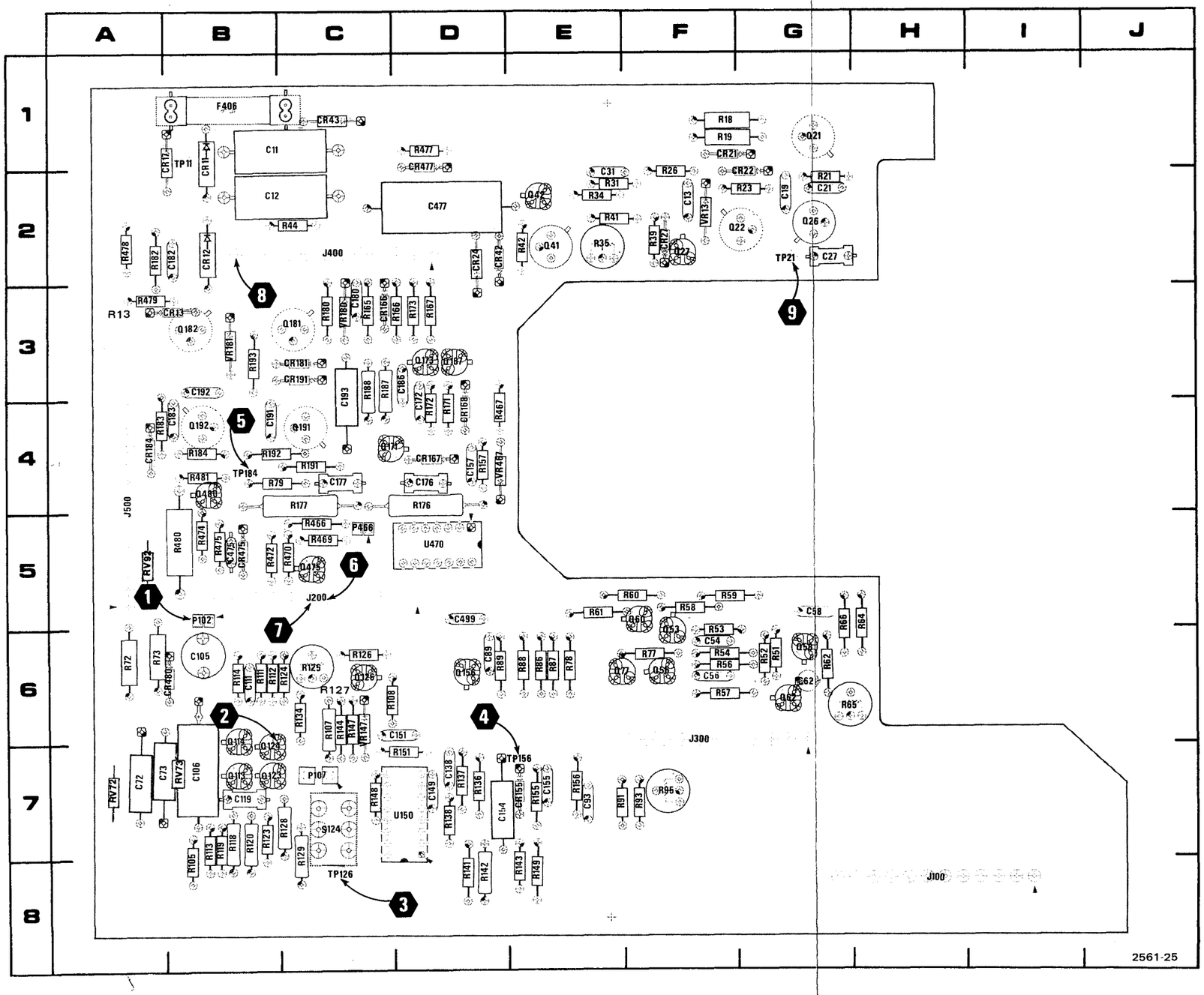

Figure 9-3. A6-Interface components and waveform test points locator.

CKT NO	GRID LOC	CKT NO	GRID LOC	CKT NO	GRID LOC	CKT NO	GRID LOC
C11	1B	Q21	1G	R114	6B	VR13	2F
C12	2B	Q22	2F	R118	7B	VR147	6C
C13	2F	Q26	2G	R119	7B	VR180	3C
C19	2G	Q27	2F	R120	7B	VR181	3B
C21	2G	Q41	2E	R123	7B	VR467	4D
C27	2G	Q42	2E	R124	6C		
C31	1E	Q53	6F	R125	6C		
C54	6F	Q56	6F	R126	6C		
C56	6F	Q58	6G	R127*	6C		
C58	5G	Q60	5F	R128	7C		
C62	6G	Q62	6G	R129	7C		
C72	7A	Q77	6E	R136	7D		
C73	7A	Q113	7B	R137	7D		
C89	6D	Q114	6B	R138	7D		
C93	7E	Q123	7B	R141	8D		
C105	6B	Q124	7C	R142	8D		
C106	7B	Q126	6C	R143	8E		
C111	6B	Q156	6D	R144	6C		
C119	7B	Q167	3D	R147	6C		
C138	7D	Q171	4C	R148	7C		
C149	7D	Q173	3D	R149	8E		
C151	6D	Q181	3C	R151	7D		
C154	7D	Q182	3B	R155	7E		
C155	7E	Q191	4C	R156	7E		
C157	4D	Q192	4B	R157	4D		
C172	4D	Q475	5C	R165	3C		
C176	4D	Q480	4B	R166	3D		
C177	4C	R13*	3A	R167	3D		
C180	3C	R18	1F	R171	4D		
C182	2B	R19	1F	R172	4D		
C183	4B	R21	2G	R173	3D		
C186	3D	R23	2G	R176	4D		
C191	4B	R26	1F	R177	4C		
C192	3B	R31	2E	R180	3C		
C193	3C	R34	2E	R182	2A		
C475	5B	R35	2E	R183	4A		
C477	2D	R39	2F	R184	4B		
C499	5D	R41	2E	R187	3C		
		R42	2E	R188	3C		
CR11	2B	R44	2C	R191	4C		
CR12	2B	R51	6G	R192	4C		
CR13	3B	R52	6G	R193	3B		
CR17	1B	R53	6F	R466	5C		
CR21	1F	R54	6F	R467	4D		
CR22	1G	R56	6F	R469	5C		
CR24	2D	R57	6F	R470	5C		
CR27	2F	R58	5F	R472	5B		
CR42	2D	R59	5F	R474	5B		
CR43	1C	R60	5F	R475	5B		
CR155	7E	R61	5E	R477	1D		
CR166	3C	R62	6G	R478	2A		
CR167	4D	R64	5H	R479	3A		
CR168	4D	R65	6G	R480	5B		
CR181	3C	R66	5G	R481	4B		
CR184	4A	R72	6A				
CR191	3C	R73	6A	RV72*	7A		
CR475	5B	R77	6F	RV73*	7A		
CR477	1D	R78	6E	RV92*	5A		
CR480	6B	R79	4C				
		R86	6E	S124	7C		
F406	1B	R87	6E				
		R88	6E	TP11	1B		
J100	8H	R89	6D	TP21	2G		
J200	5C	R91	7E	TP126	8C		
J300	6F	R93	7F	TP156	7E		
J400	2C	R95	7F	TP184	4B		
J500	4A	R105	8B				
		R107	6C	U150	7D		
P102	5B	R108	6C	U470	5D		
P107	7C	R111	6B				
P466	5C	R112	6B				
		R113	7B				

*See Parts List for serial number ranges.

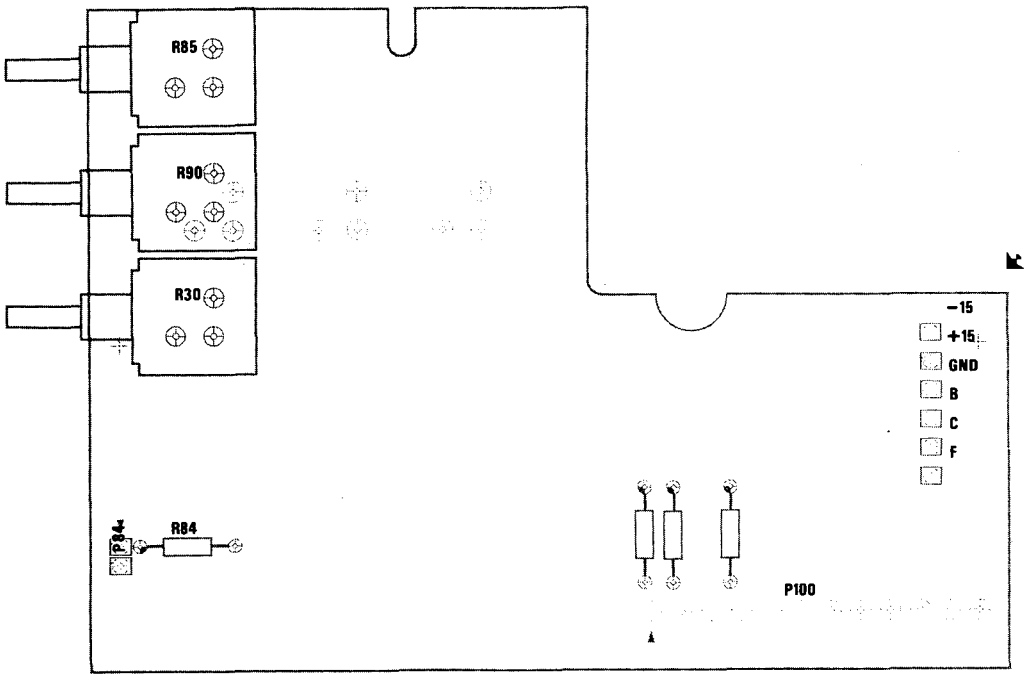

Figure 9-3A. A1-Front Panel Components.

Note

Option 16 Control Board is exactly the same, except that the BRIGHTNESS, CONTRAST, and FOCUS controls are removed from the board. These controls are operated remotely.

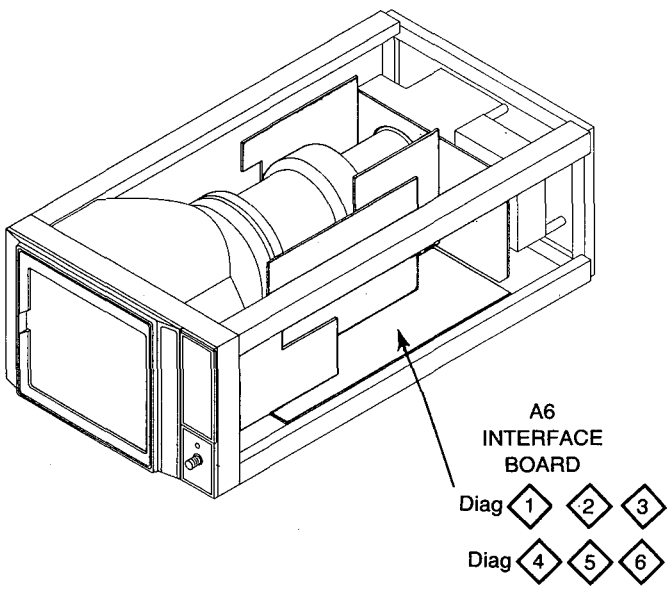

VOLTAGE AND WAVEFORM CONDITIONS

The voltages and waveforms shown were obtained with the 634 controls set for a well-defined display.

Waveform Conditions. The waveforms shown below were obtained using a test oscilloscope system with 1 MΩ input impedance and at least 15 MHz bandwidth (Tektronix 7603, 7B53A Time Base, and 7A13 Differential Comparator equipped with 10X probe). A 1 V, medium APL video test signal was applied to the 634 VIDEO INPUT connector.

Voltage Conditions. The voltages shown on the diagram were obtained using a digital multimeter with a 10 MΩ input impedance (Tektronix DM502).

1

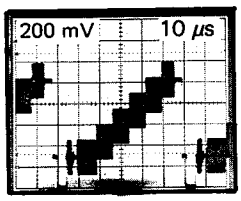

0 V

2

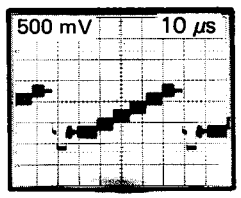

0.88 V

3

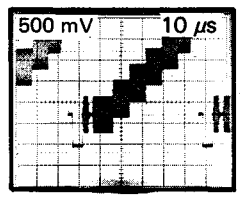

0 V

4

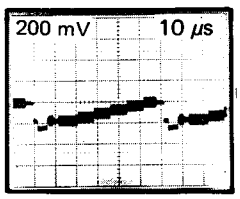

1.3 V

5

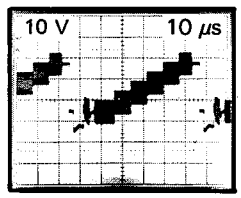

7.0 V

6

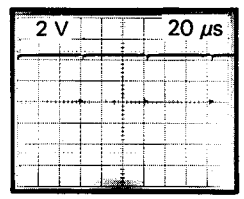

0 V

7

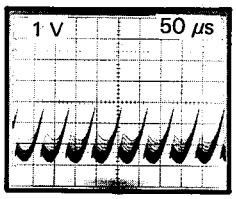

0 V

8

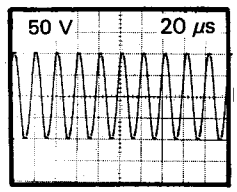

0 V

9

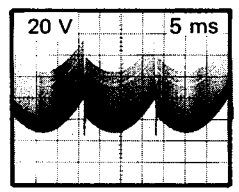

0 V

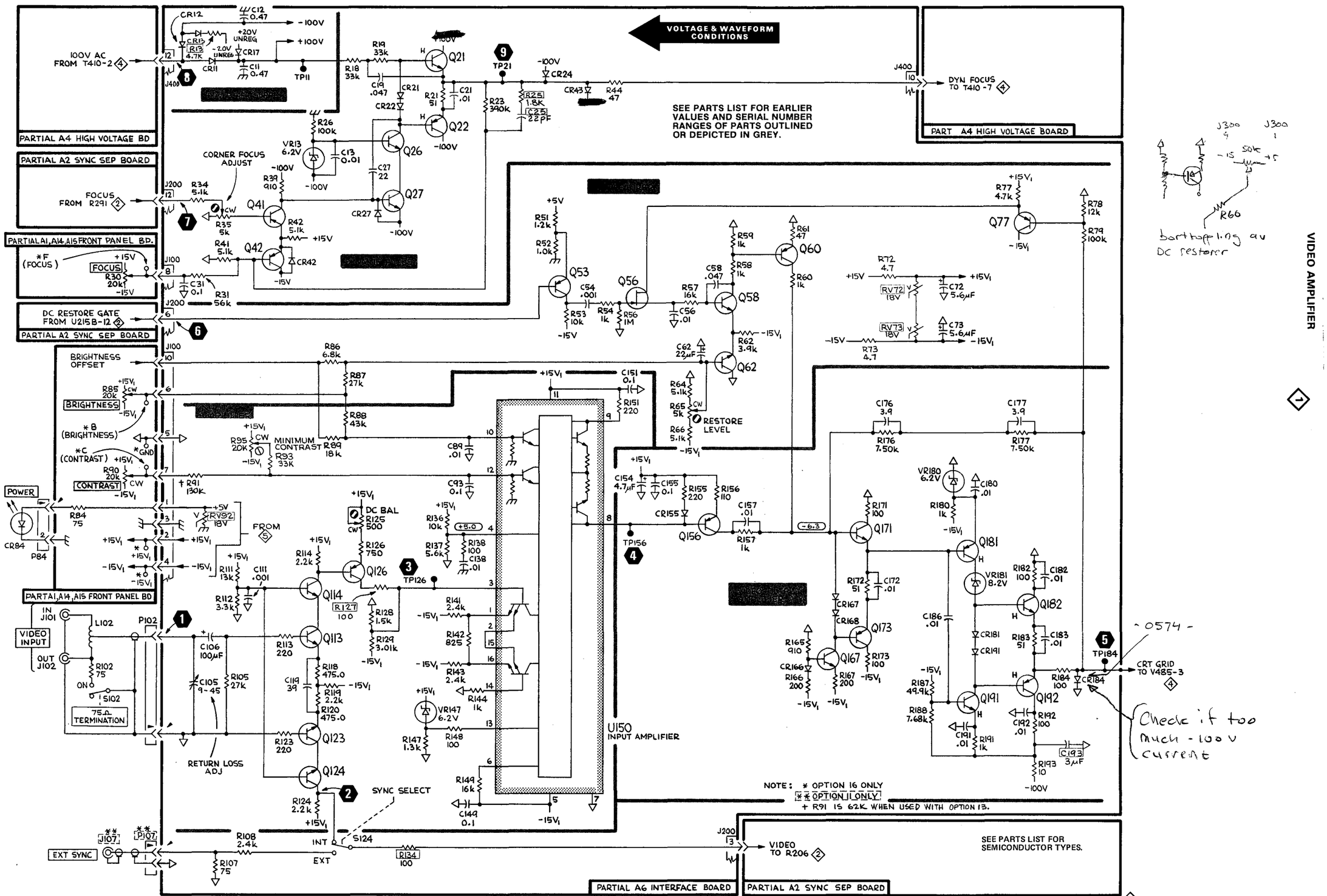

2561-40
REV, MAY 1984

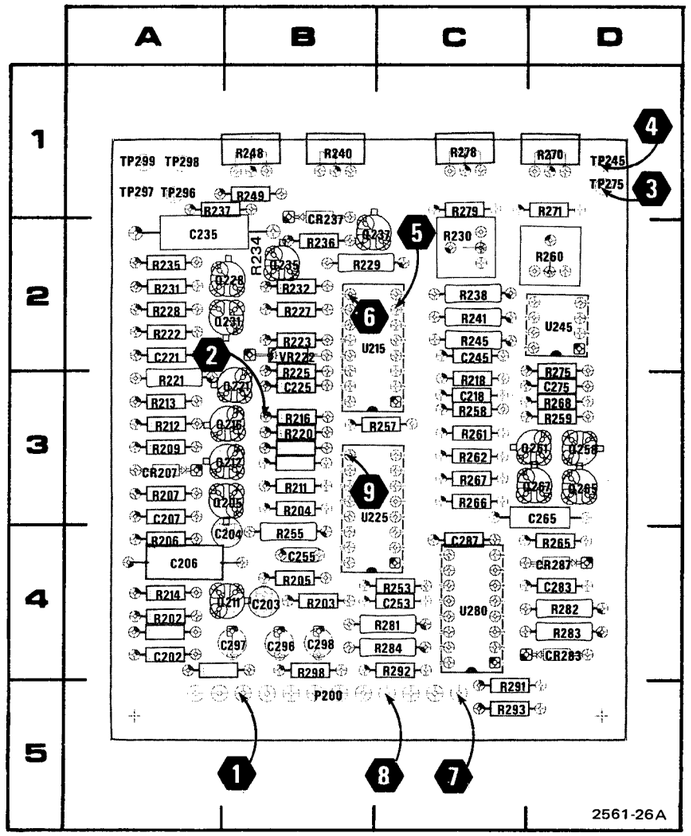

Figure 9-4. A2-Sync Separator components and waveform test points locator.

CKT NO	GRID COORD	CKT NO	GRID COORD	CKT NO	GRID COORD	CKT NO	GRID COORD	CKT NO	GRID COORD
C202	4A	CR283	4D	R206	4A	R238	2C	R282	4D
C203	4B	CR287	4D	R207	3A	R240	1B	R283	4D
C204	4A			R209	3A	R241	2C	R284	4C
C206	4A	P200	5B	R211	3B	R245	2C	R291	5C
C207	3A			R212	3A	R248	1B	R292	4C
C218	3C	Q205	3A	R213	3A	R249	1B	R293	5C
C221	2A	Q211	4A	R214	4A	R253	4C	R298	4B
C225	3B	Q212	3B	R216	3B	R255	4B		
C235	1A	Q216	3B	R218	3C	R257	3B	TP245	1D
C245	2C	Q221	3B	R220	3B	R258	3C	TP275	1D
C253	4C	Q228	2B	R221	3A	R260	2D	TP296	1A
C255	4B	Q231	2B	R222	2A	R261	3C	TP297	1A
C259	3D	Q235	2B	R223	2B	R262	3C	TP298	1A
C265	3D	Q237	2B	R225	3B	R265	4D	TP299	1A
C275	3D	Q258	3D	R227	2B	R266	3C		
C283	4D	Q261	3D	R228	2A	R267	3C	U215	2B
C287	4C	Q265	3D	R229	2B	R268	3D	U225	3B
C296	4B	Q267	3C	R230	2C	R270	1D	U245	2D
C297	4B			R231	2A	R271	1D	U280	4C
C298	4B	R202	4A	R232	2B	R275	3D		
		R203	4B	R234	2B	R278	1C	VR222	2B
CR207	3A	R204	3B	R235	2A	R279	1C		
CR237	1B	R205	4B	R236	2B	R281	4C		
				R237	1A				

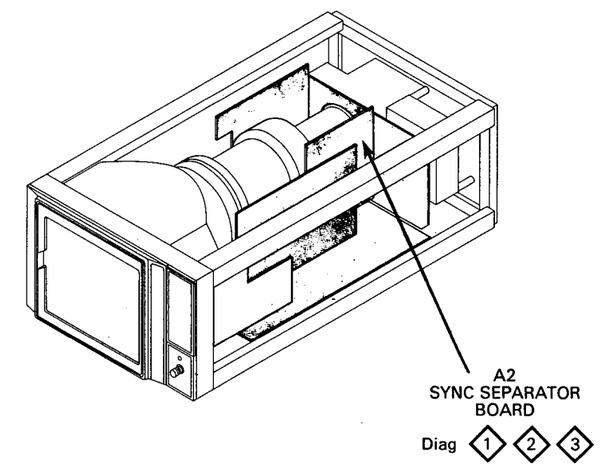

VOLTAGE AND WAVEFORM CONDITIONS

The voltages and waveforms shown were obtained with the 634 controls set for a well-defined display.

Waveform Conditions. The waveforms shown below were obtained using a test oscilloscope system with 1 MΩ input impedance and at least 15 MHz bandwidth (Tektronix 7603, 7B53A Time Base, and 7A13 Differential Comparator equipped with 10X probe). A 1 V, medium APL video test signal was applied to the 634 VIDEO INPUT connector.

Voltage Conditions. The voltages shown on the diagram were obtained using a digital multimeter with a 10 MΩ input impedance (Tektronix DM502).

1

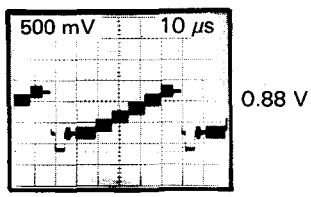

2

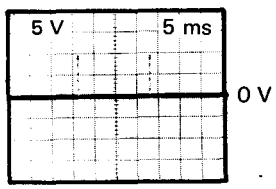

3

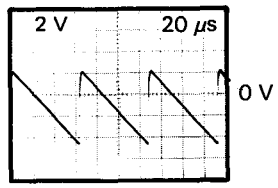

4

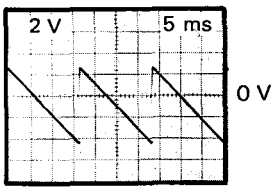

5

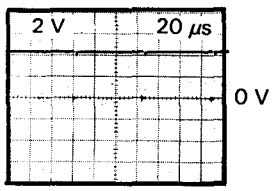

6

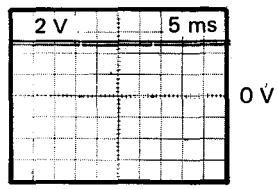

7

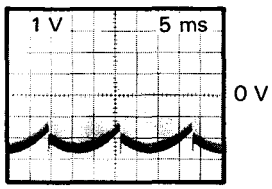

8

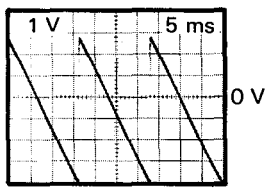

9

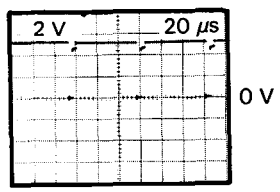

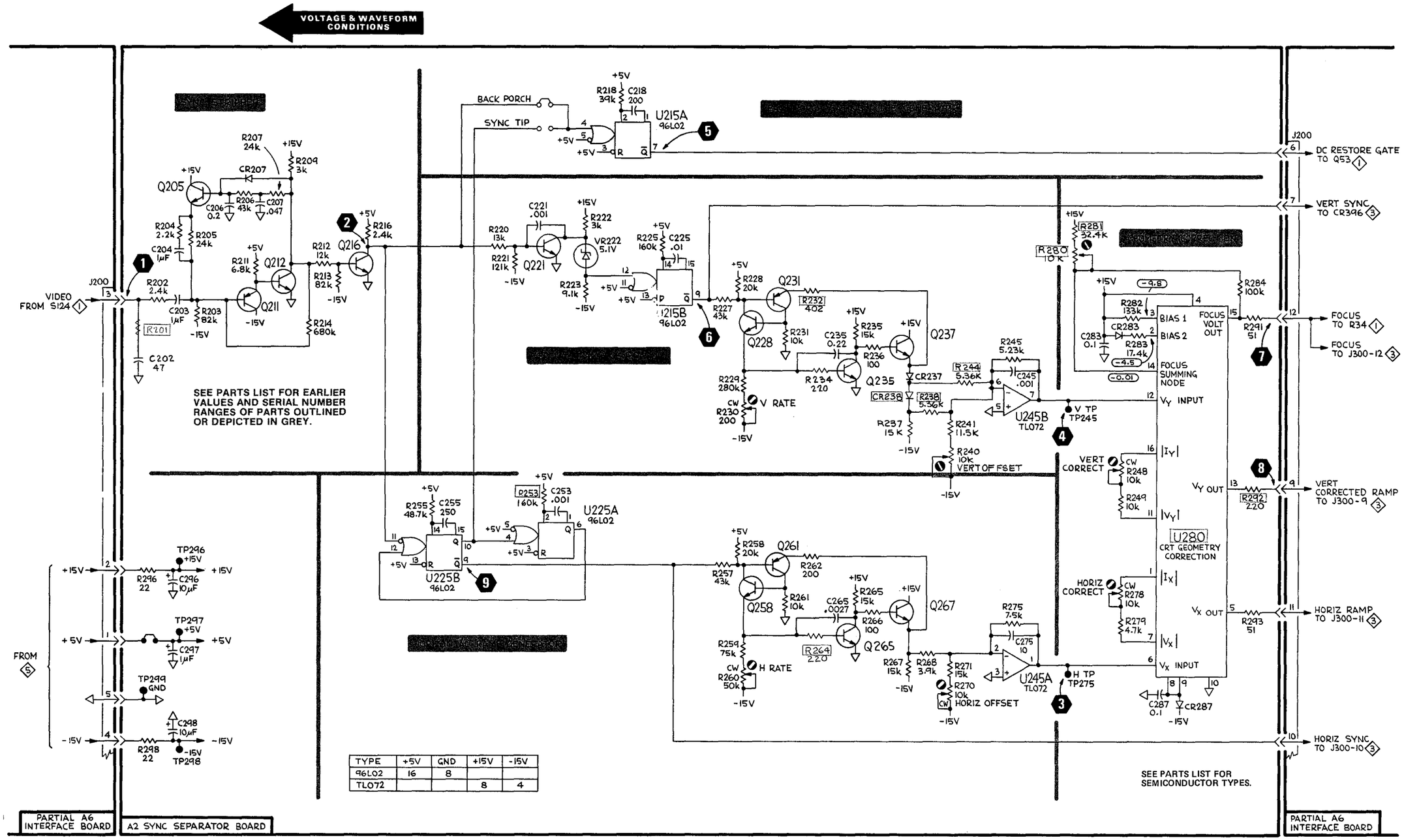

TYPE	+5V	GND	+15V	-15V
96L02	16	8		
TL072			8	4

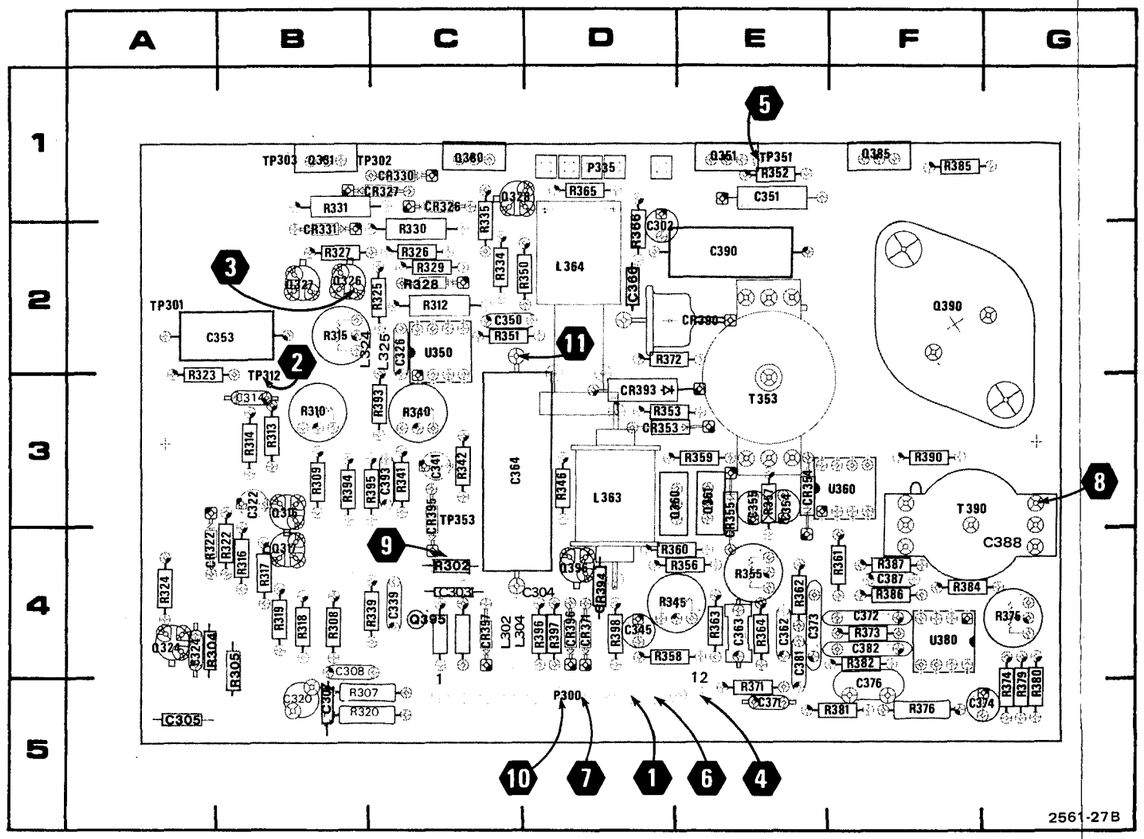

Figure 9-5. A3, A16 Yoke Driver component and waveform test points locator.

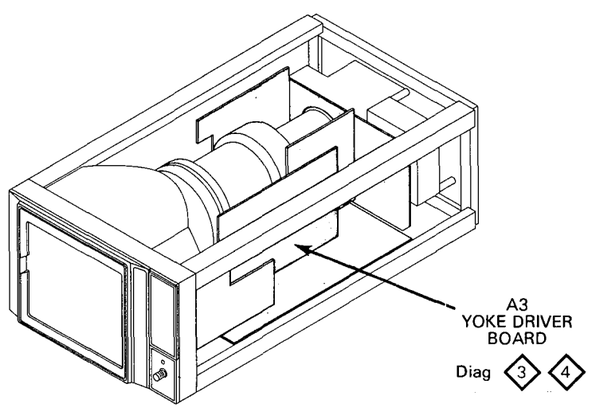

CKT NO	GRID COORD	CKT NO	GRID COORD	CKT NO	GRID COORD	CKT NO	GRID COORD	CKT NO	GRID COORD
C302	2D	CR322	4A	Q331	1B	R334	2C	R382	4F
C303*	4C	CR326	1C	Q351	1E	R335	2C	R384	4F
C304*	4C	CR327	1C	Q360	3D	R339	4C	R385	1F
C307*	5B	CR328	2C	Q361	3E	R340	3C	R386	4F
C308	4B	CR330	1C	Q385	1F	R341	3C	R387	4F
C314	3B	CR331	2B	Q390	2F	R342	3C	R390	3F
C320	5B	CR353	3D	Q395	4C	R345	4D	R393	3C
C322	3B	CR354	3E	Q396	4D	R346	3D	R394	3B
C324	4A	CR355	3E			R350	2D	R395	3C
C326	2C	CR371	4D	R307	5C	R351	2C	R396	4D
C339	4C	CR390	2E	R308	4B	R352	1E	R397	4D
C341	3C	CR393	3D	R309	3B	R353	3D	R398	4D
C345	4D	CR394	4D	R310	3B	R355	4E		
C350	2C	CR395	3C	R312	2C	R356	4D	T353	3E
C351	1E	CR396	4D	R313	3B	R357	3E	T390	3F
C353	2A	CR397	4C	R314	3B	R358	4D		
C354	3E			R315	2B	R359	3E	TP301	2A
C355	3E	L302*†§	4C	R316	4B	R360	4D	TP302	1B
C362	4E	L304*†§	4C	R317	4B	R361	4F	TP303	1B
C363	4E	L363	3D	R318	4B	R362	4F	TP312	2B
C364	3C	L364	2D	R319	4B	R363	4E	TP351	1E
C366	2D			R320	5C	R364	4E	TP353	3C
C371	5E	P300	5D	R322	4B	R365	1D		
C372	4F	P335	1D	R323	3A	R366	2D	U350	2C
C373	4E			R324	4A	R371	5E	U360	3E
C374	5F	Q316	3B	R325	2C	R372	2D	U380	4F
C376	5F	Q317	4B	R326	2C	R373	4F		
C381	4E	Q324	4A	R327	2B	R374	5G		
C382	4F	Q326	2B	R328	2D	R375	4G		
C387	4F	Q327	2B	R329	2C	R376	5F		
C388†	3G	Q328	1C	R330	2C	R379	5G		
C390	2E	Q330	1C	R331	1B	R380	5G		
C393	3C					R381	5F		

†Located on back of board.

*See Parts List for serial number ranges.

§Option 20 only.

VOLTAGE AND WAVEFORM CONDITIONS

The voltages and waveforms shown were obtained with the 634 controls set for a well-defined display.

Waveform Conditions. The waveforms shown below were obtained using a test oscilloscope system with 1 MΩ input impedance and at least 15 MHz bandwidth (Tektronix 7603, 7B53A Time Base, and 7A13 Differential Comparator equipped with 10X probe). A 1 V, medium APL video test signal was applied to the 634 VIDEO INPUT connector.

Voltage Conditions. The voltages shown on the diagram were obtained using a digital multimeter with a 10 MΩ input impedance (Tektronix DM502).

1

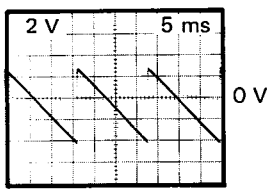

2

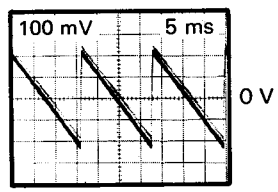

3

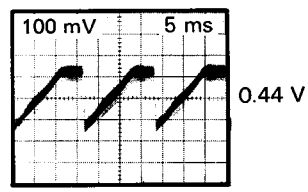

4

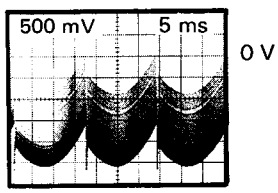

5

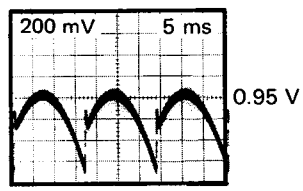

6

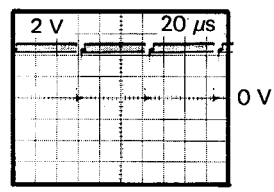

7

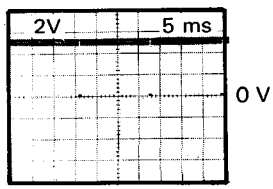

8

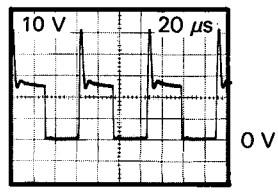

9

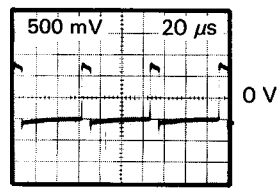

10

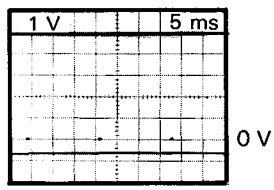

11

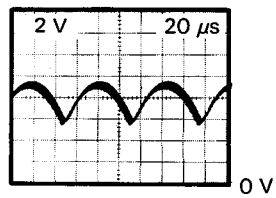

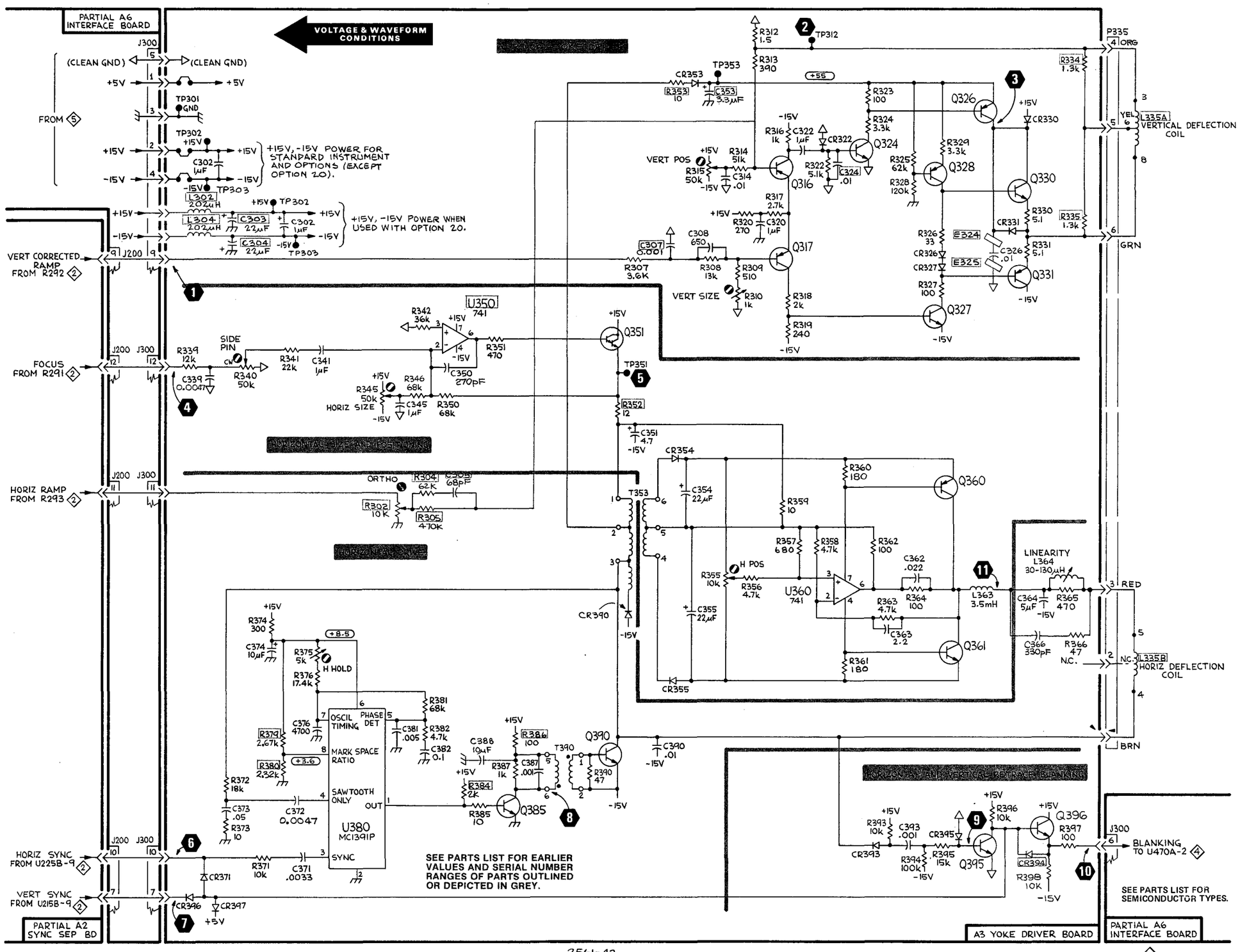

2561-42
REV, MAY 1984

YOKE DRIVER 3

YOKE DRIVER

3

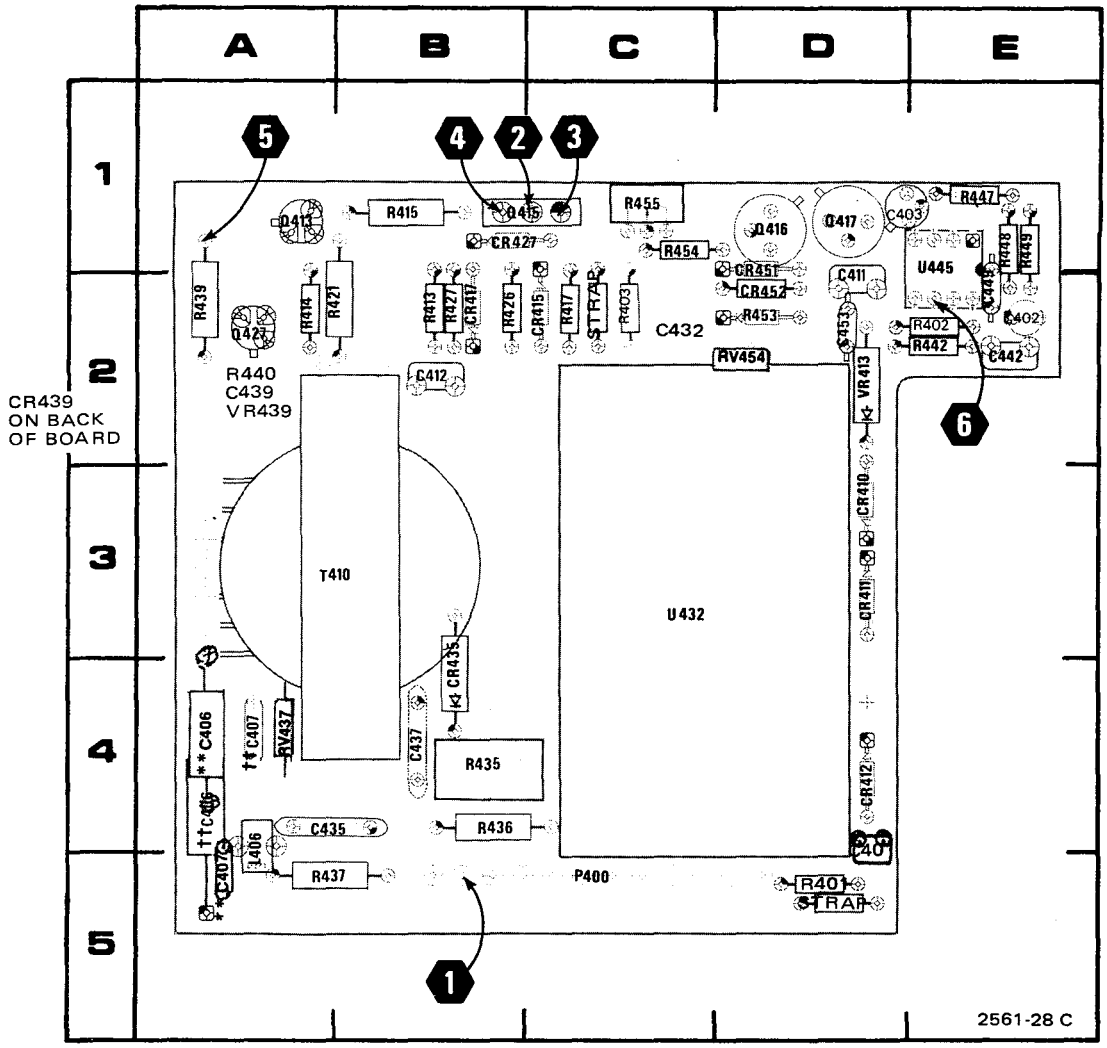

Figure 9-6. A4-High Voltage components and waveform test points locator.

CKT NO	GRID COORD	CKT NO	GRID COORD	CKT NO	GRID COORD	CKT NO	GRID COORD
C401	5D	CR415	2C	Q427	2A	R442	2E
C402	2E	CR417	2B			R447	1E
C403	1D	CR427	1B	R401	5D	R448	2E
C406**	4A	CR435§	4B	R402	2E	R449	2E
C406††	4A	CR435Δ	4B	R403	2C	R453	2D
C407**	5A	CR451	2C	R413	2B	R454	1C
C407††	4A	CR452	2D	R414	2A	R455	1C
C411	1D			R415	1B		
C412	2B	L406	5A	R417	2C	RV437*†	4A
C432†	2C			R421	2A	RV454*†	2D
C435	4A	P400	5C	R426	2B	T410*	3B
C437	4B			R427	2B		
C442	2E	Q413	1A	R435§	4B	U432	3C
C449	2E	Q415	1B	R435Δ	4B	U445	1E
C453	2D	Q416	1D	R436	4B		
		Q417	1D	R437	5B	VR413	2D
CR410	3D			R439	2A		
CR411	3D						
CR412	4D						

*See Parts List for serial number ranges.

†Located on back of board.

††C406, C407 original position SN B019999 & below

**C406, C407 relocated to new position SN B020000 & up.

§CR435, R435 located on front of board SN B019999 & below

ΔCR435, R435 located on back of board SN B020000 & up

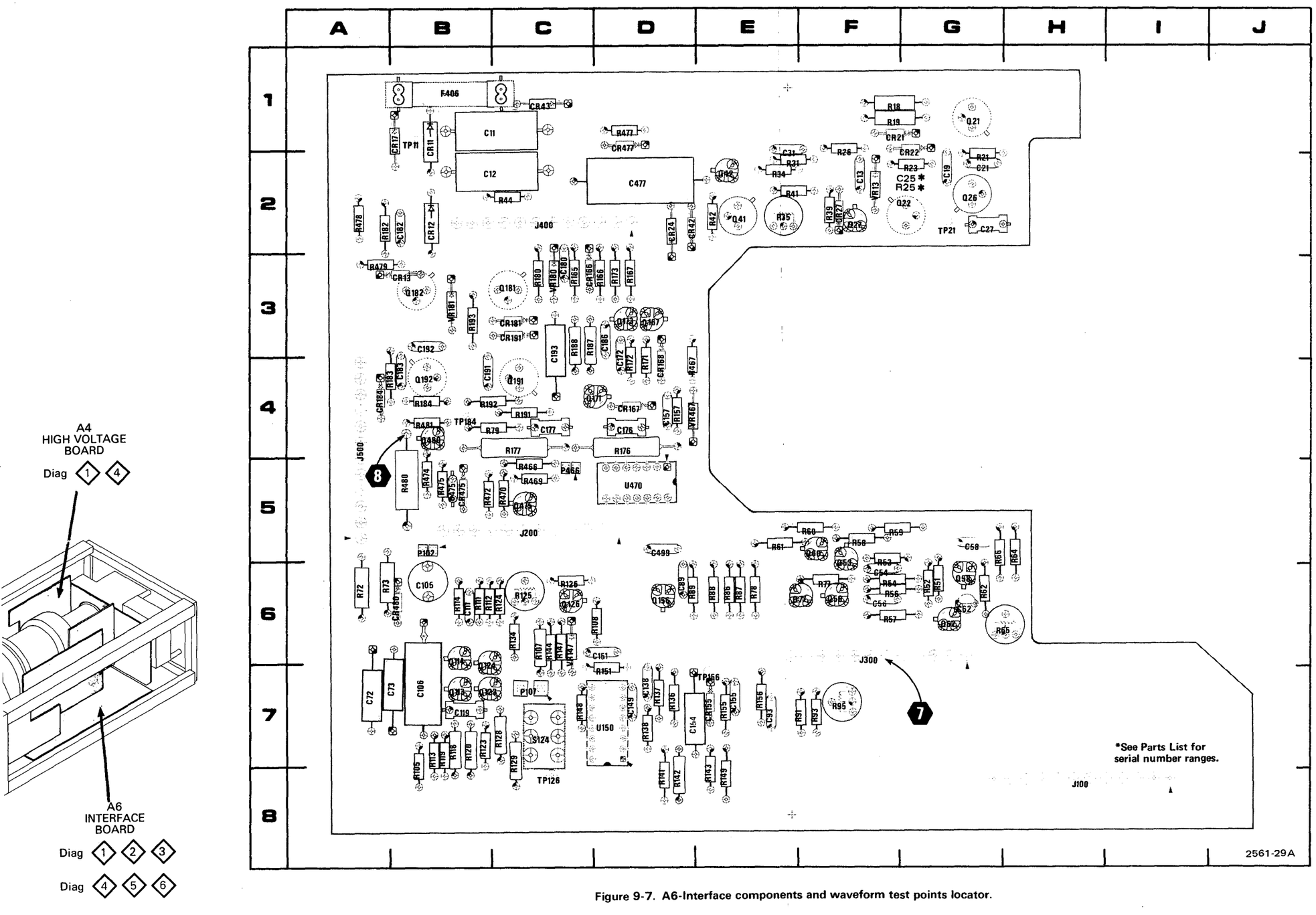

CKT NO	GRID COORD
C475	5B
C477	2D
CR475	5B
CR477	1D
CR480	6B
F406	1B
J300	6F
J400	2C
P466	5C
Q475	5C
Q480	4B
R466	5C
R467	4D
R469	5C
R470	5C
R472	5B
R474	5B
R475	5B
R477	1D
R478	2A
R479	3A
R480	5B
R481	4B
U470	5D
V467	4D

Figure 9-7. A6-Interface components and waveform test points locator.

VOLTAGE AND WAVEFORM CONDITIONS

The voltages and waveforms shown were obtained with the 634 controls set for a well-defined display.

Waveform Conditions. The waveforms shown below were obtained using a test oscilloscope system with 1 MΩ input impedance and at least 15 MHz bandwidth (Tektronix 7603, 7B53A Time Base, and 7A13 Differential Comparator equipped with 10X probe). A 1 V, medium APL video test signal was applied to the 634 VIDEO INPUT connector.

Voltage Conditions. The voltages shown on the diagram were obtained using a digital multimeter with a 10 MΩ input impedance (Tektronix DM502).

1

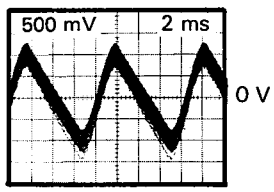

2

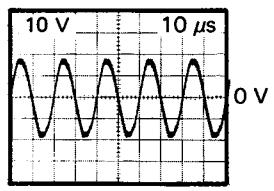

3

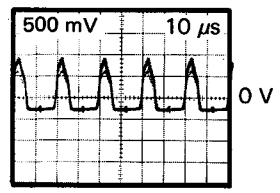

4

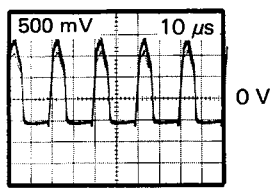

5

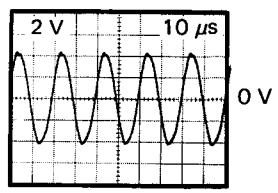

6

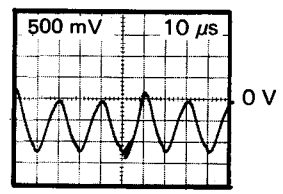

7

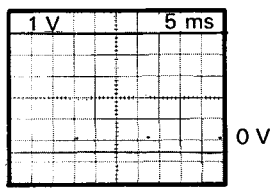

8

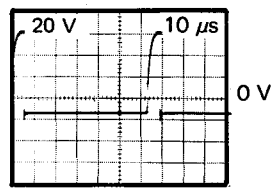

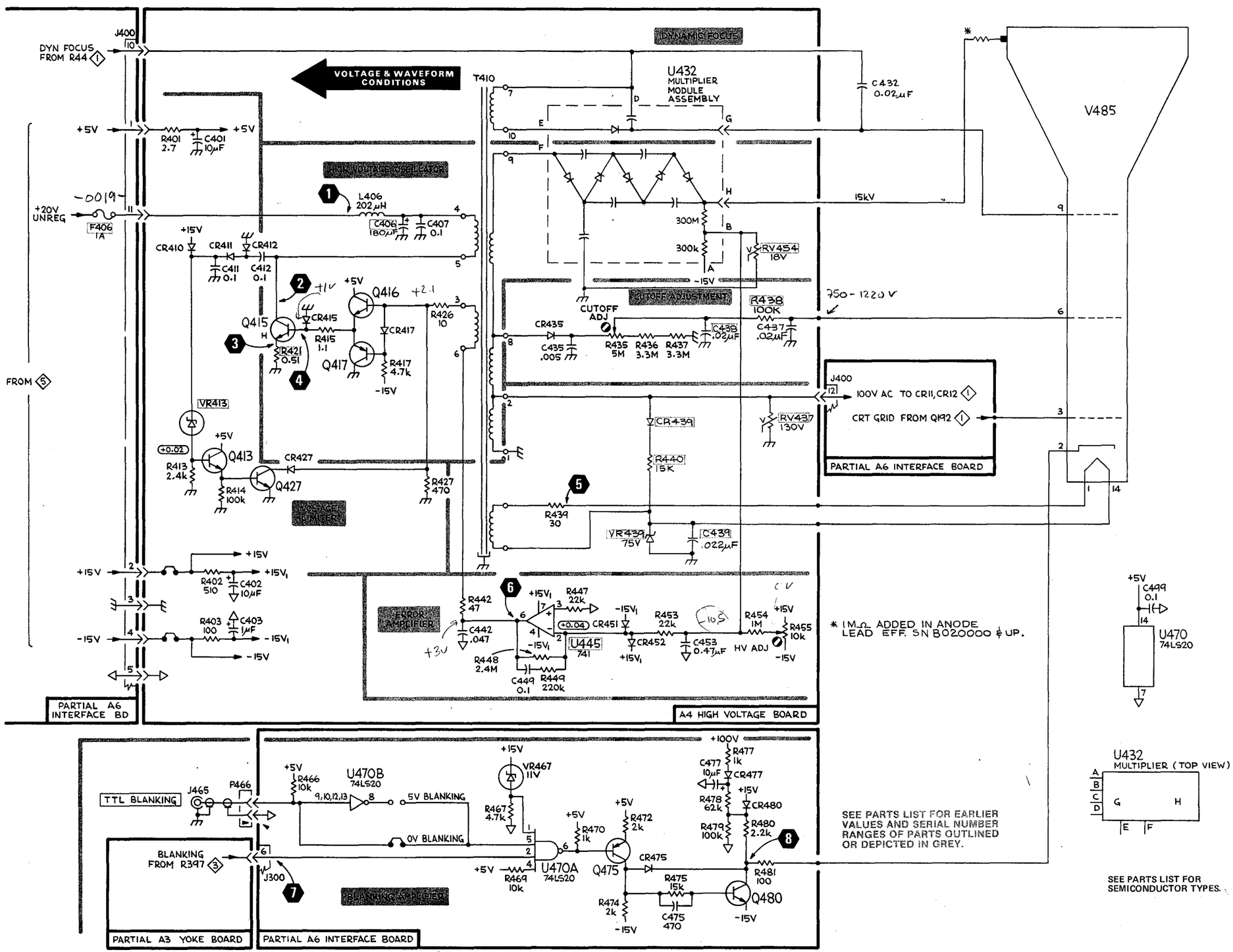

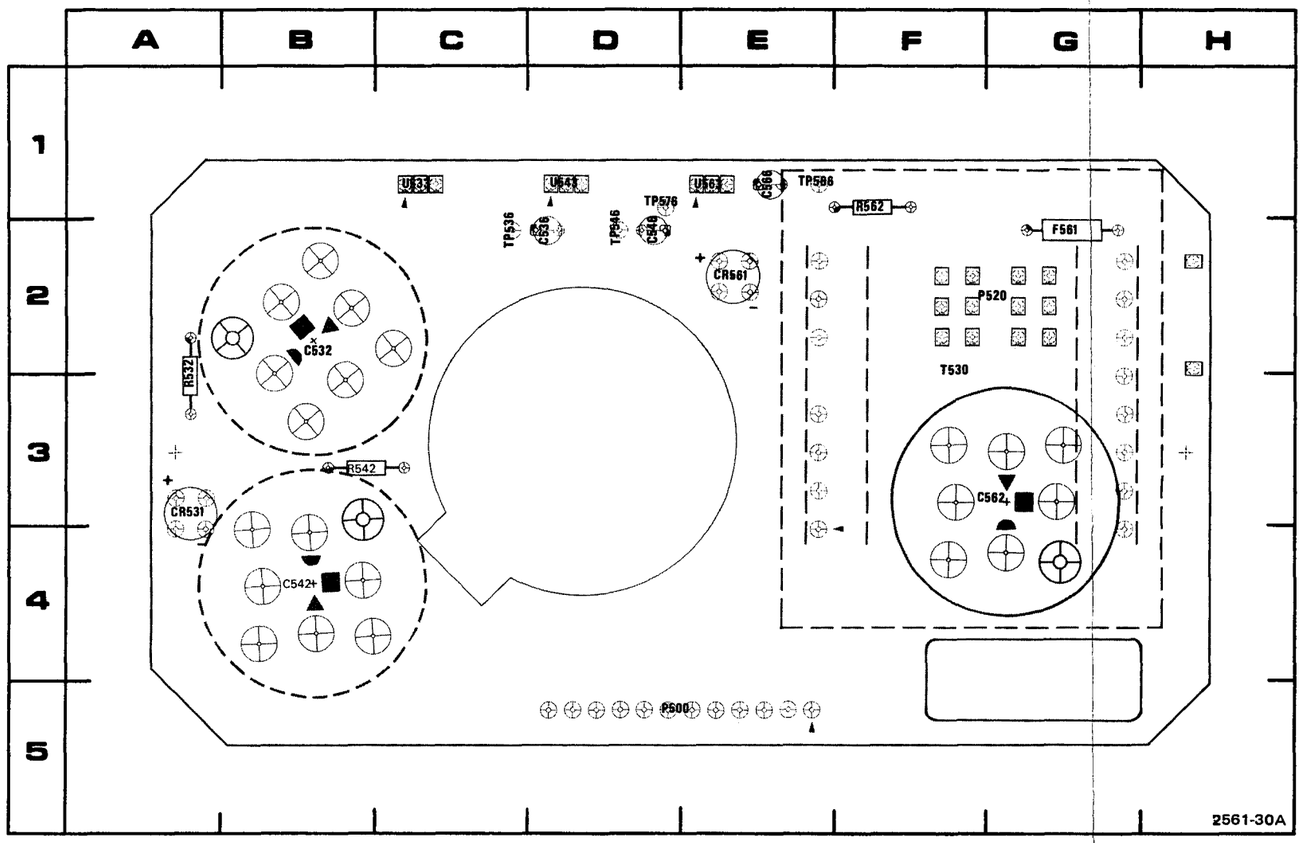

Figure 9-8. A5-Power Supply components.

CKT NO	GRID COORD	CKT NO	GRID COORD
C532	2B	R532	3A
C536	2D	R542	3B
C542	4B	R562	1F
C546	2D		
C562	4G	T530	2F
C566	1E		
		TP536	2C
CR531 †	3A	TP546	2D
CR561	2E	TP566	13
		TP576	1D
F561	2G		
		U533	1C
P500	5D	U543	1D
P520	2G	U563	1E

† Located on back of board on current models.

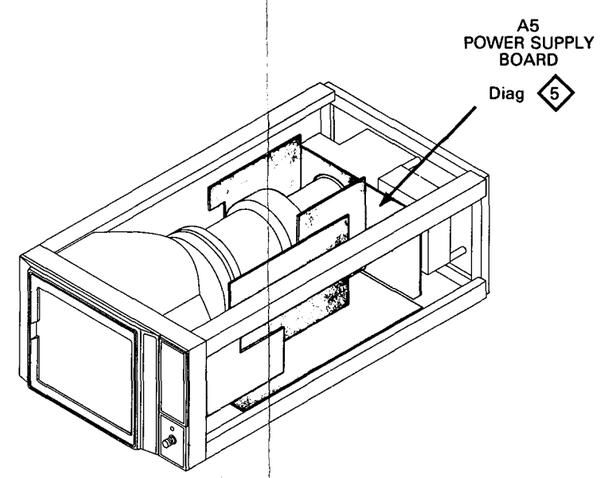

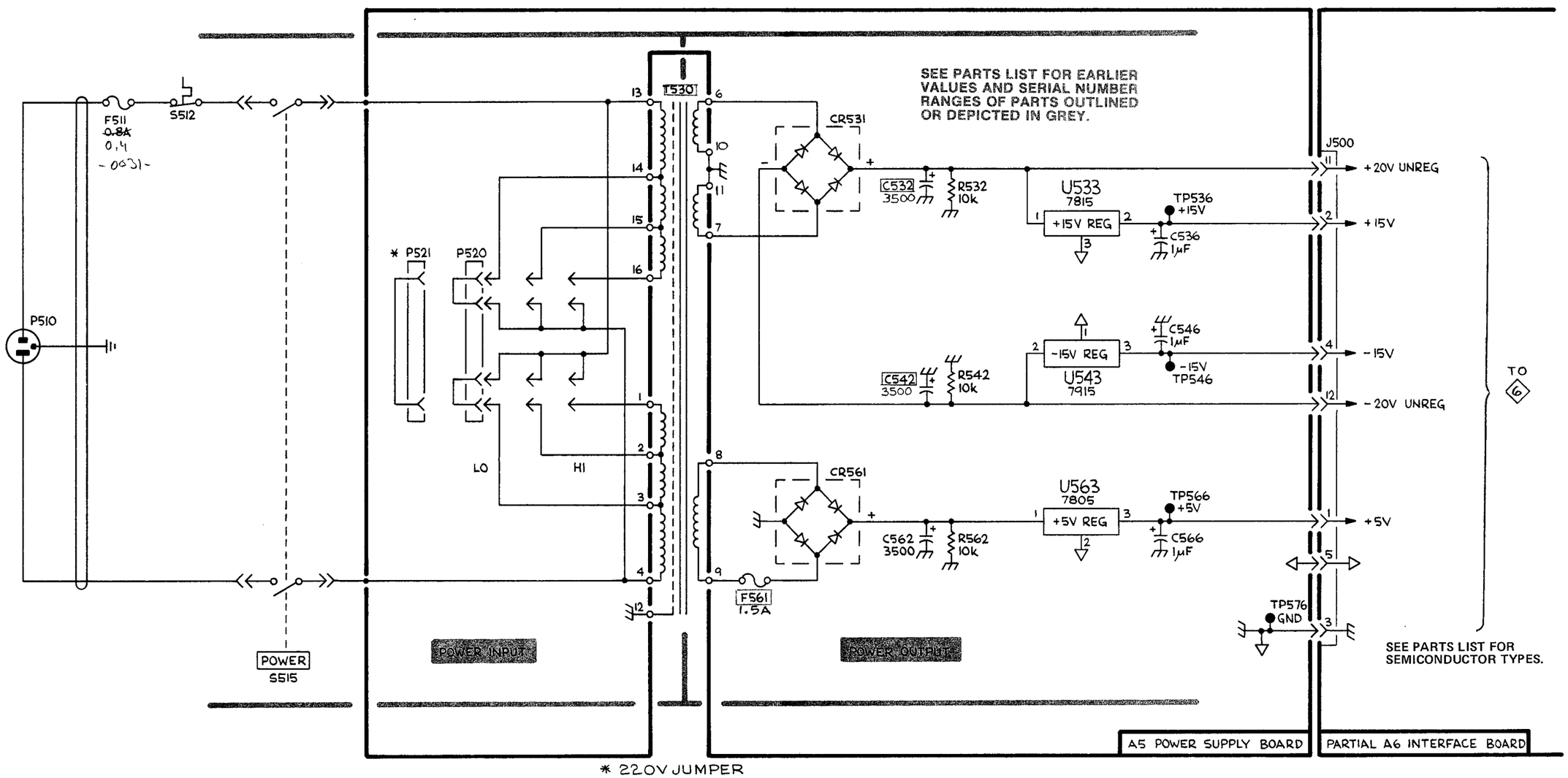

LV POWER SUPPLY

5

2561-44
REV, MAY 84

LV POWER SUPPLY 5

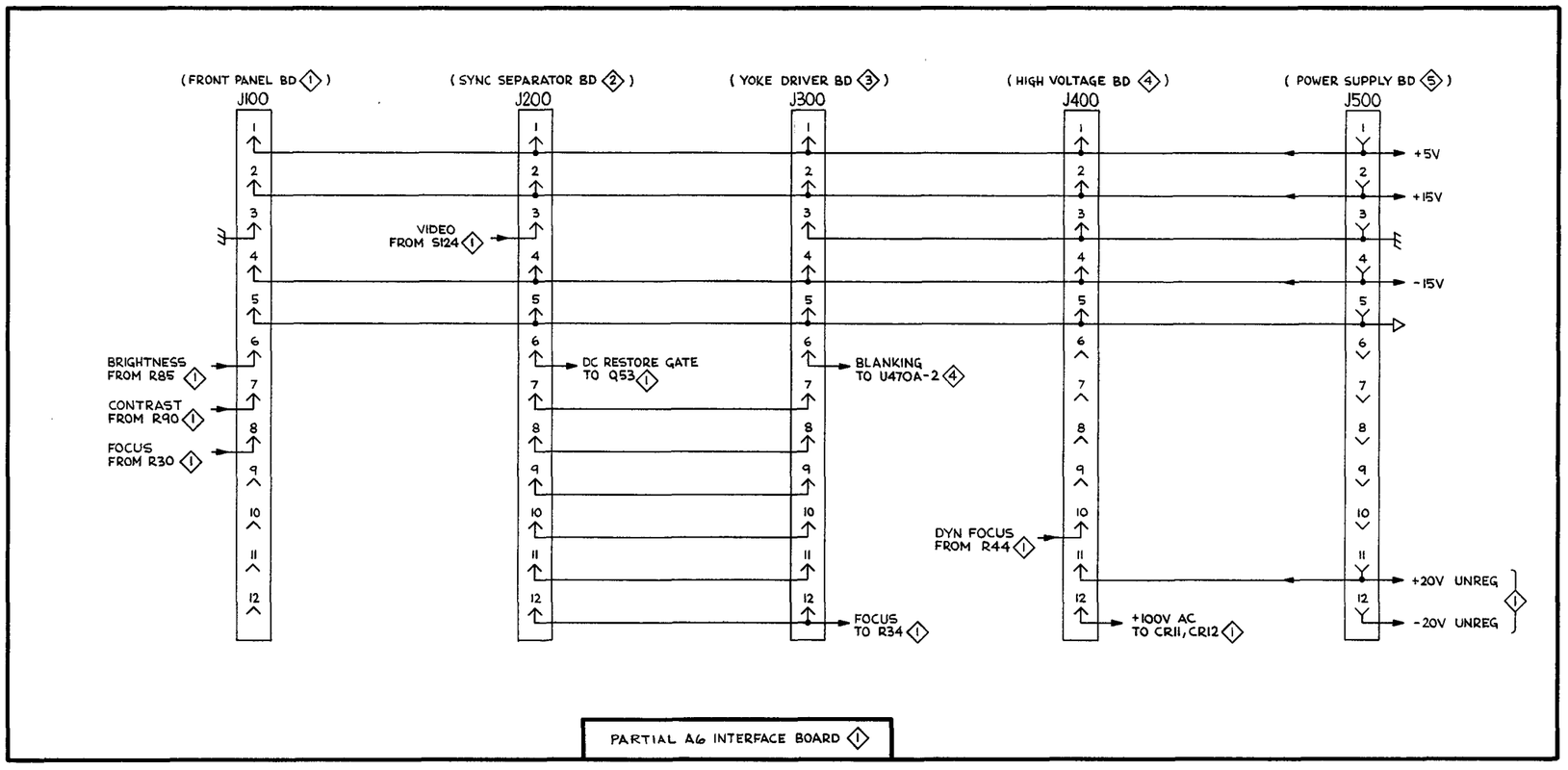

2561-45

REV A AUG 1979

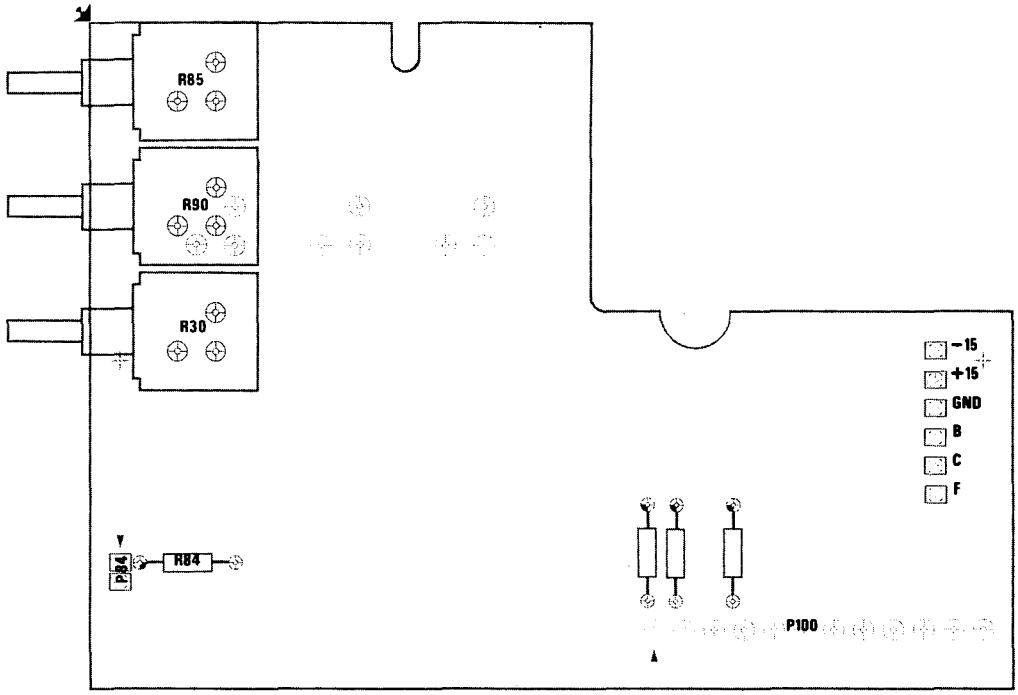

Figure 9-8A. A15-Front Panel Components (Opt. 17).

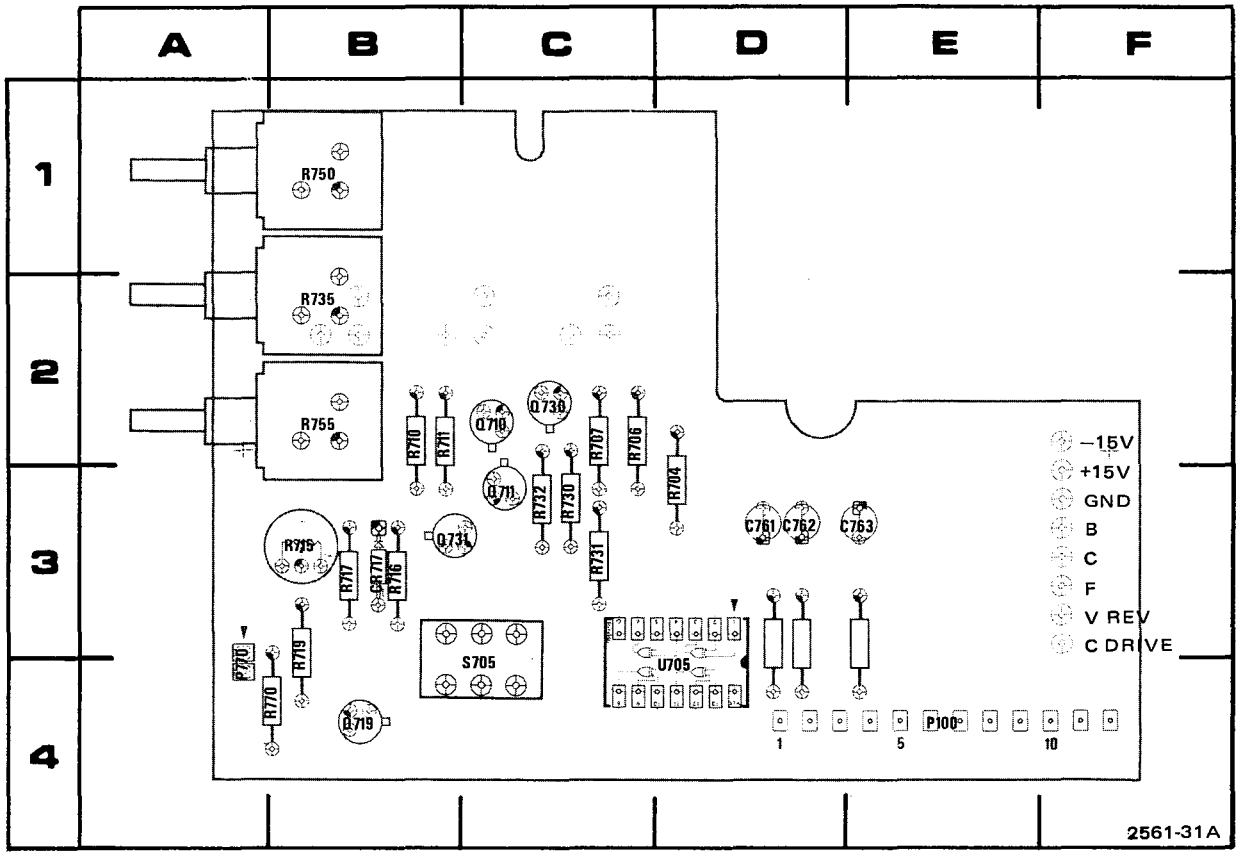

Figure 9-9. A8-Front Panel (Option 13) components.

CKT NO	GRID COORD	CKT NO	GRID COORD	CKT NO	GRID COORD
C761	3D	Q730	2C	R730	3C
C762	3D	Q731	3B	R731	3C
C763	3E			R732	3C
		R704	3D	R735	2B
CR717	3B	R706	2C	R750	1B
		R707	2C	R755	2B
P100	4E	R710	2B	R770	4B
P770	4A	R711	2B		
		R715	3B	S705	4C
Q710	2C	R716	3B		
Q711	3C	R717	3B	U705	4D
Q719	4B	R719	3B		

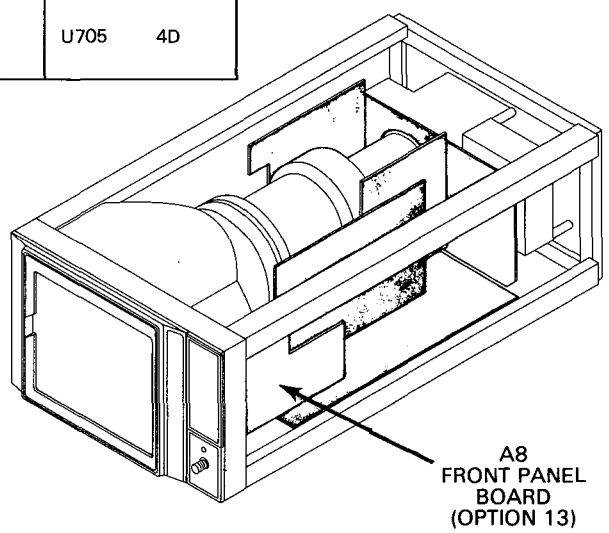

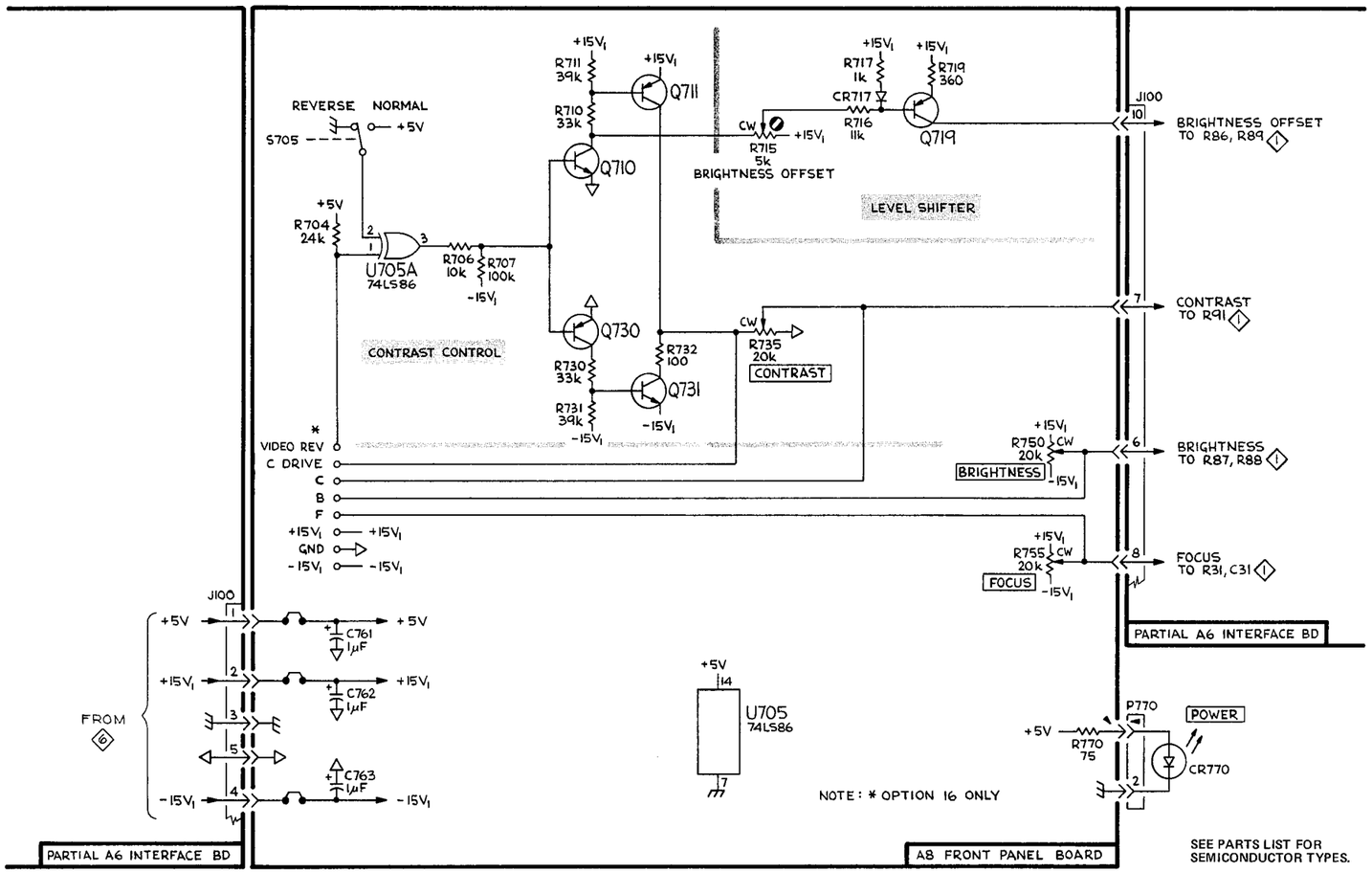

2561-46
REV A AUG 1979

VIDEO REVERSAL (OPTION 13) 7

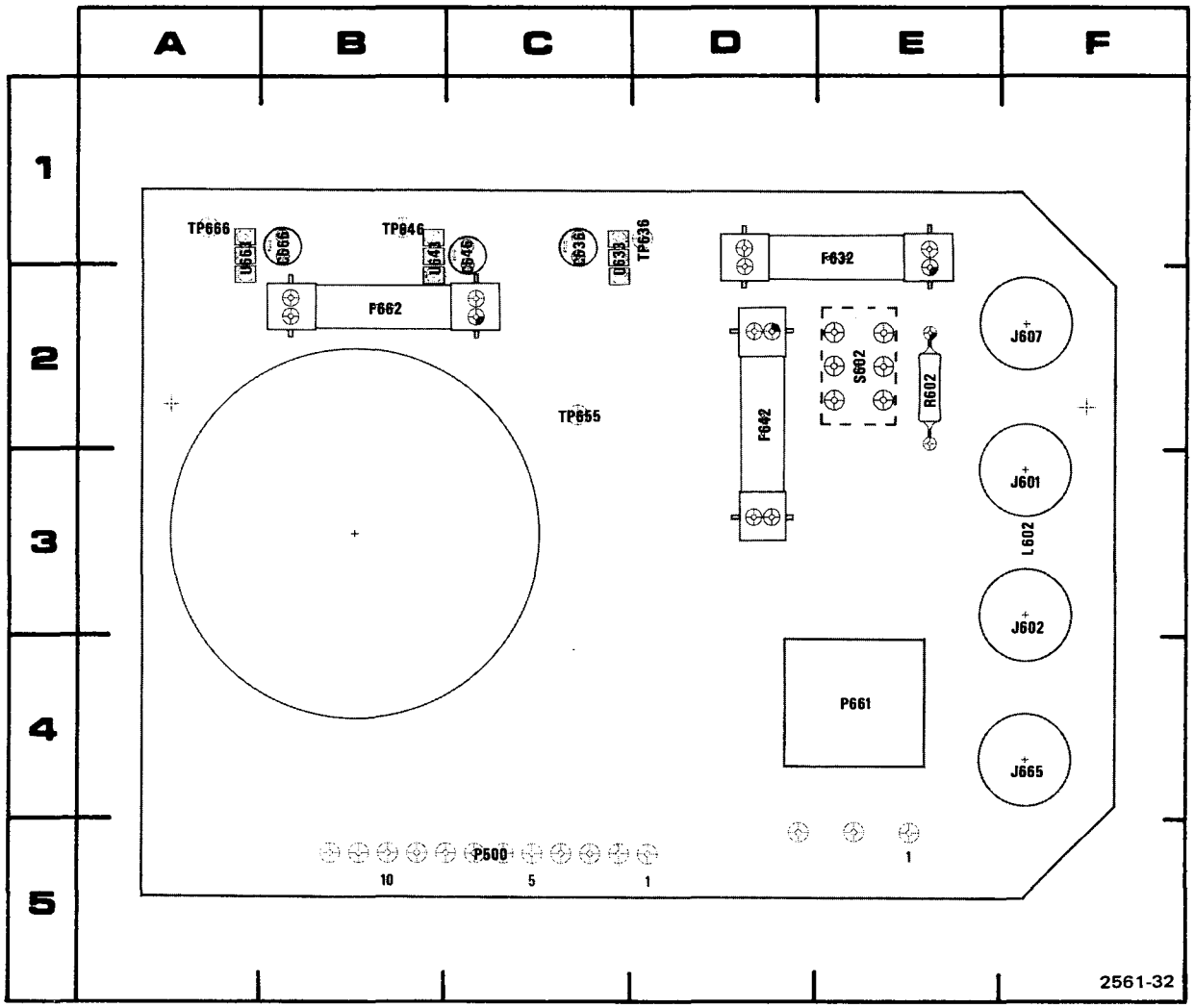

Figure 9-10. A7-Power Supply (Option 20) components.

CKT NO	GRID COORD	CKT NO	GRID COORD	CKT NO	GRID COORD
C636	1C	J665	4F	TP636	1D
C646	1C			TP646	1B
C666	1B	L602	3F	TP655	2C
				TP666	1A
F632	1E	P500	5C		
F642	2D	P661	4E	U633	1C
F662	2B			U643	1B
		R602	2E	U663	1A
J601	3F				
J602	3F	S602	2E		
J607	2F				

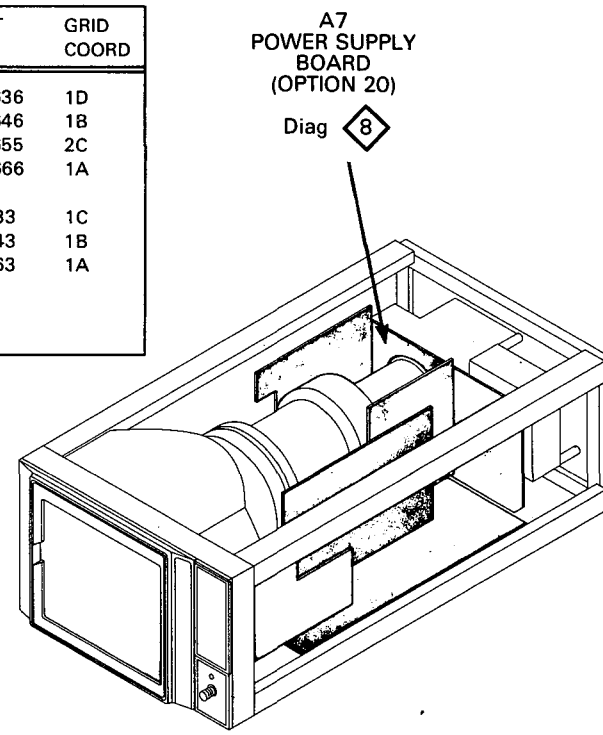

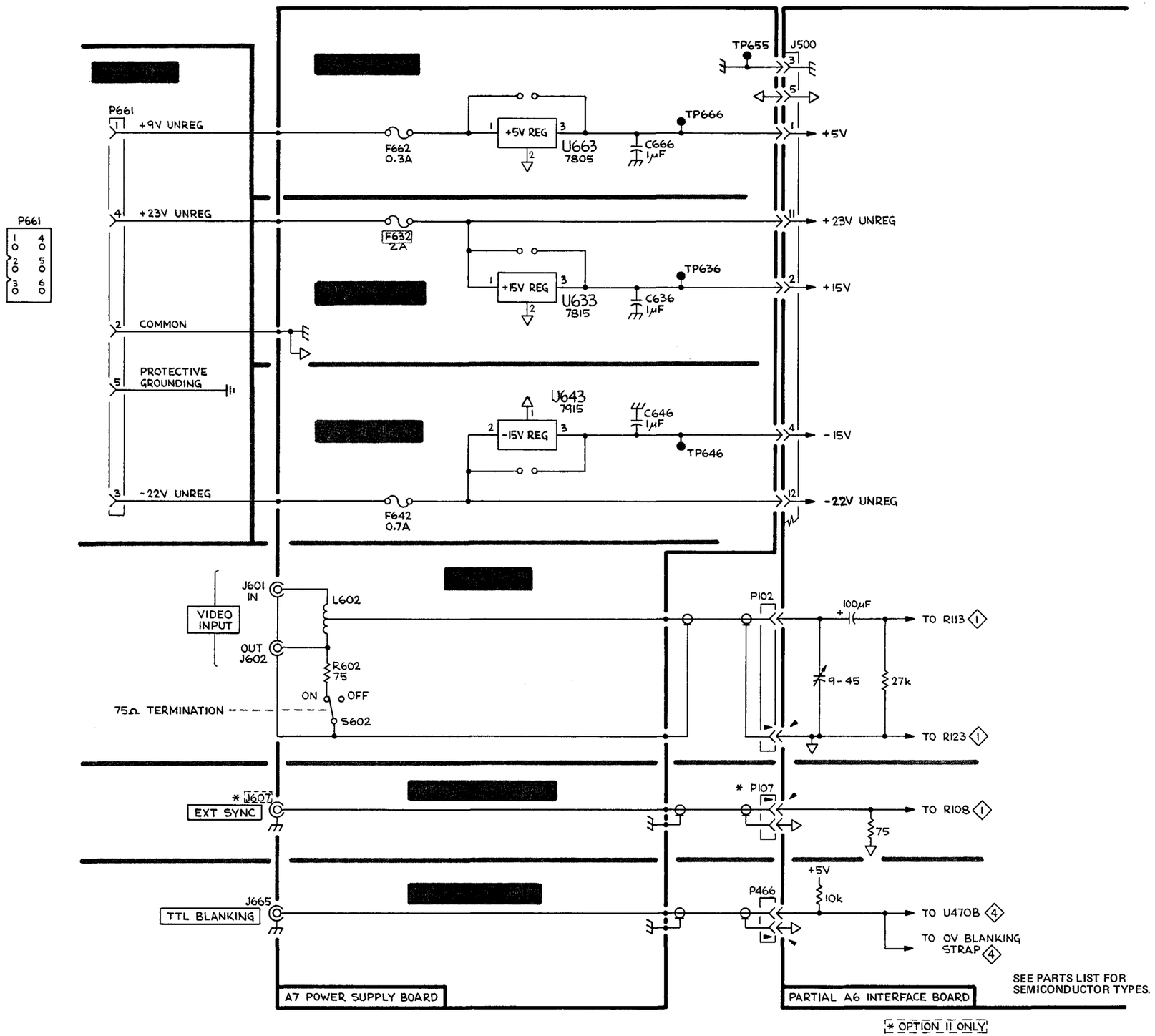

2561-47
REV. MAY 1984

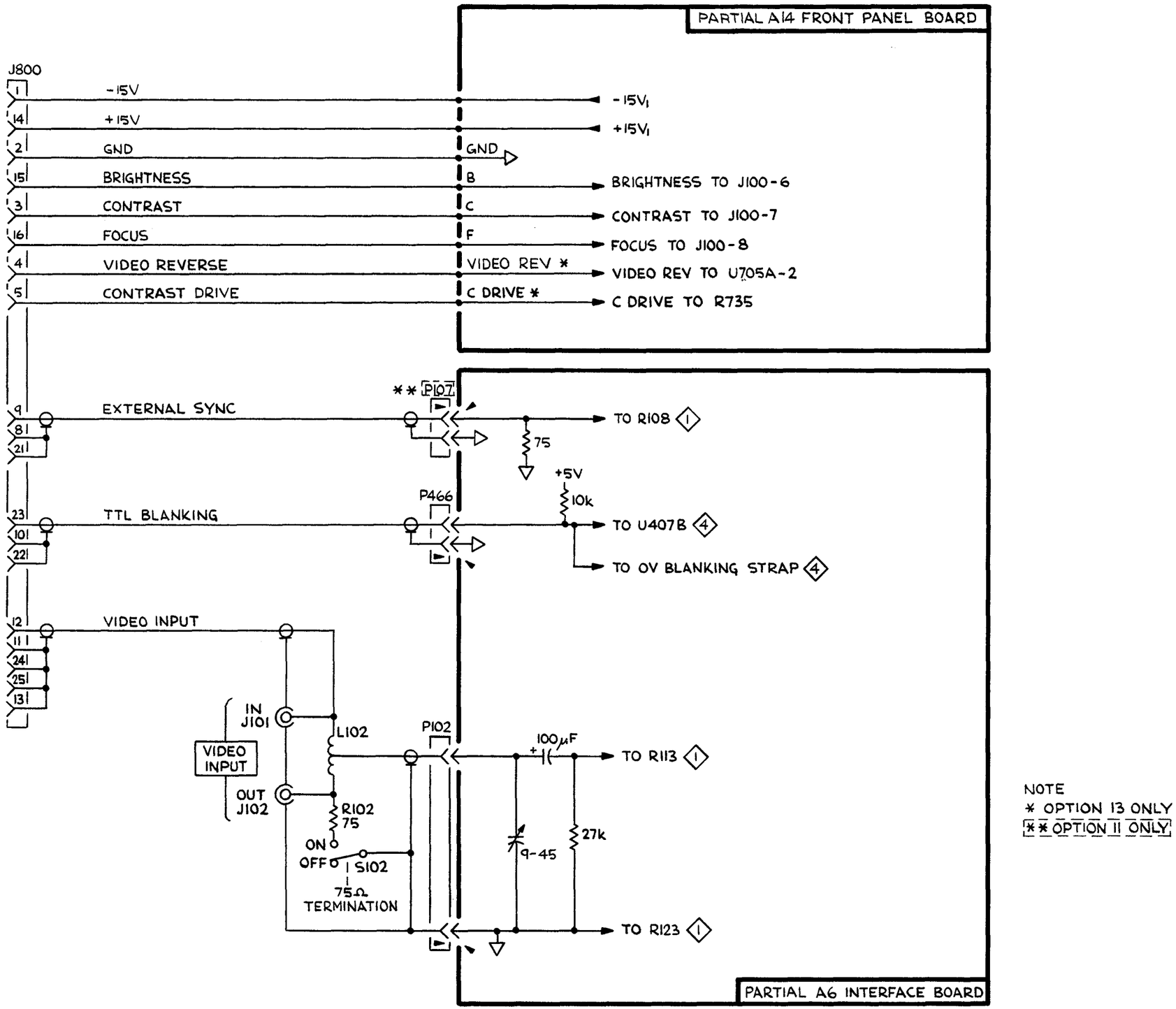

NOTE
* OPTION 13 ONLY
** OPTION 11 ONLY

REMOTE PROGRAMMING (OPTION 16) 9

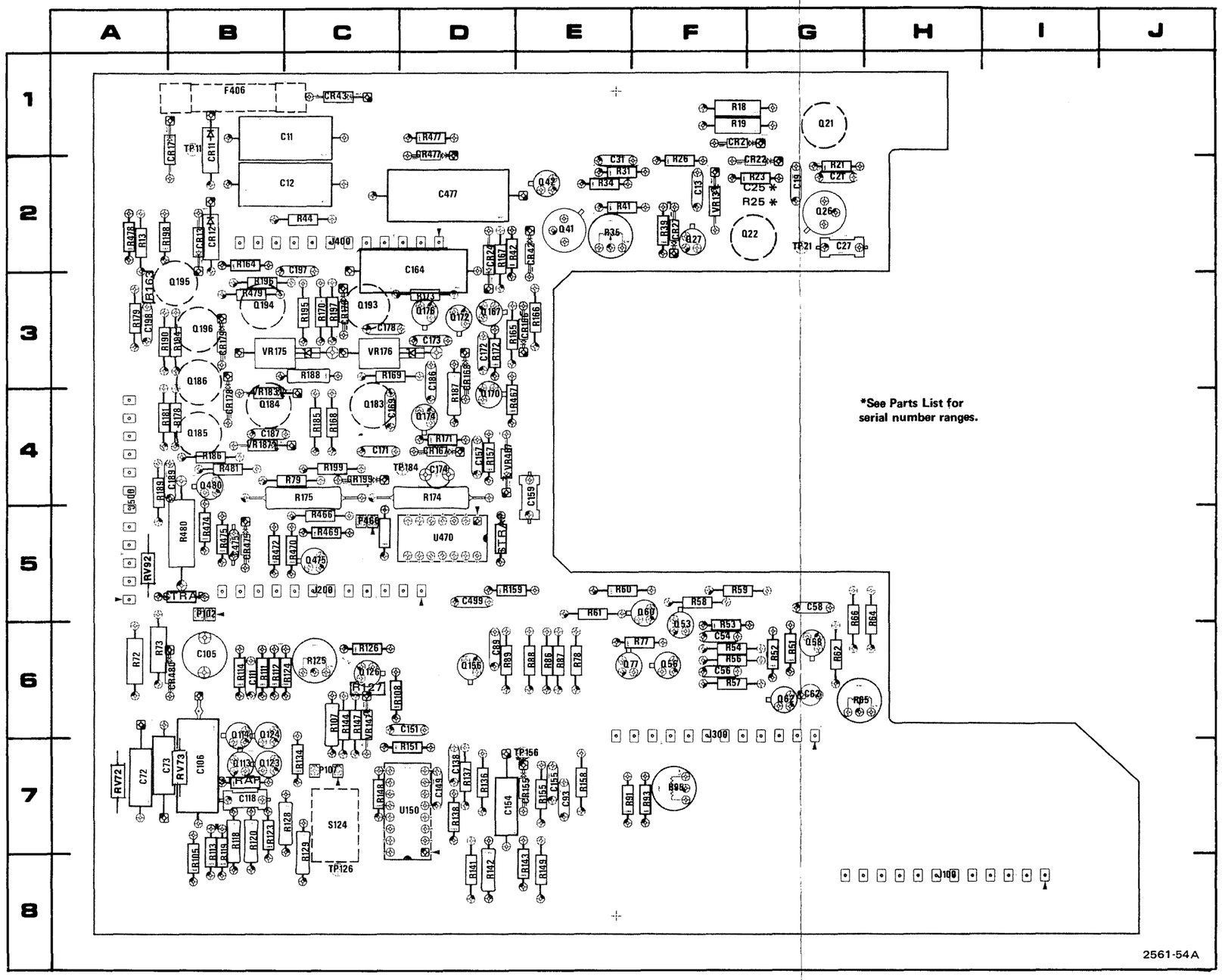

Figure 9-11. A9—Interface (Option 14) components.

CKT NO	GRID LOC	CKT NO	GRID LOC	CKT NO	GRID LOC	CKT NO	GRID LOC	CKT NO	GRID LOC
C11	1B	CR199	4C	R31	2E	R158	7E	VR13	2F
C12	2B	CR475	5B	R34	2E	R159	5E	VR147	6C
C13	2F	CR477	1D	R35	2E	R163	3A	VR175	3C
C19	2G	CR480	6B	R39	2F	R164	3B	VR176	3C
C21	2G			R41	2E	R165	3E	VR180	3C
C27	2G	F406	1B	R42	2E	R166	3E	VR181	3B
C31	2E			R44	2C	R167	3D	VR183	4B
C54	6F	J100	8H	R51	6G	R168	4C	VR187	4B
C56	6F	J200	5C	R52	6G	R169	3C	VR467	4D
C58	5G	J300	6F	R53	6F	R170	3C		
C62	6G	J400	2C	R54	6F	R171	4D		
C72	7A	J500	4A	R56	6F	R172	3D		
C73	7A			R57	6F	R173	3D		
C89	6D	P102	5B	R58	5F	R174	4D		
C93	7E	P107	7C	R59	5F	R175	4C		
C105	6B	P466	5C	R60	5F	R176	4E		
C106	7B			R61	5E	R177	4C		
C111	6B	Q21†	1G	R62	6G	R178	3A		
C118	7B	Q22†	2F	R64	6H	R179	4B		
C138	7D	Q26	2G	R65	6G	R180	3C		
C149	7D	Q27	2F	R66	6G	R181	4A		
C151	6D	Q41	2E	R72	6A	R182	2A		
C154	7D	Q42	2E	R73	6A	R183	4A		
C155	7E	Q53	6F	R77	6F	R184	4B		
C157	4D	Q56	6F	R78	6E	R185	4C		
C159	5E	Q58	6G	R79	4C	R186	4B		
C164	2D	Q60	5F	R86	6E	R187	3C		
C169	4C	Q62	6G	R87	6E	R188	3C		
C171	4C	Q77	6E	R88	6E	R189	4A		
C172	3D	Q113	7B	R89	6D	R190	3A		
C173	3D	Q114	7B	R91	7E	R191	4C		
C174	4D	Q123	7B	R93	7F	R192	4C		
C176	4D	Q124	7C	R95	7F	R193	3B		
C177	4C	Q126	6D	R105	8B	R194	3B		
C178	3C	Q156	6D	R107	6C	R195	3C		
C186	3D	Q167	3D	R108	6C	R196	3B		
C187	4B	Q170	4E	R111	6B	R197	3C		
C189	4A	Q171	4C	R112	6B	R198	2A		
C197	2C	Q172	3D	R113	7B	R199	4C		
C198	3A	Q173	3D	R114	6B	R466	5C		
C475	5D	Q174	4B	R118	7B	R467	4D		
C477	2D	Q176	3D	R119	7B	R469	5C		
C499	5D	Q181	3C	R120	7B	R470	5C		
		Q182	3B	R123	7B	R472	5B		
CR11	2B	Q183†	4C	R124	6C	R474	5B		
CR12	2B	Q184†	4B	R125	6C	R475	5B		
CR13	2B	Q185†	4B	R126	6C	R477	1D		
CR17	1B	Q186†	3B	R127	6C	R478	2A		
CR21	1F	Q191	4C	R128	8C	R479	3B		
CR22	1G	Q192	4B	R129	8C	R480	5B		
CR24	2D	Q193†	3C	R134	7C	R481	4B		
CR27	2F	Q194†	3B	R136	7D				
CR42	2E	Q195†	3A	R137	7D	RV72*	7A		
CR43	1C	Q196†	3B	R138	7D	RV73*	7A		
CR155	7D	Q475	5C	R141	8D	RV92*	5A		
CR166	3C	Q480	4B	R142	8D				
CR167	4D			R143	8E	S124†	7C		
CR168	3D			R144	7C				
CR176	3C	R13	2A	R147	7C	TP11	1B		
CR178	4C	R18	1F	R148	7D	TP21	2G		
CR179	3B	R19	1F	R149	8E	TP126	8C		
CR181	3C	R21	2G	R151	7D	TP156	7E		
CR184	4A	R23	2G	R155	7E	TP184	4C		
CR191	3C	R26	2F	R156	7E				
				R157	4D	U150	7D		
						U470	5D		

†Located on back of board.

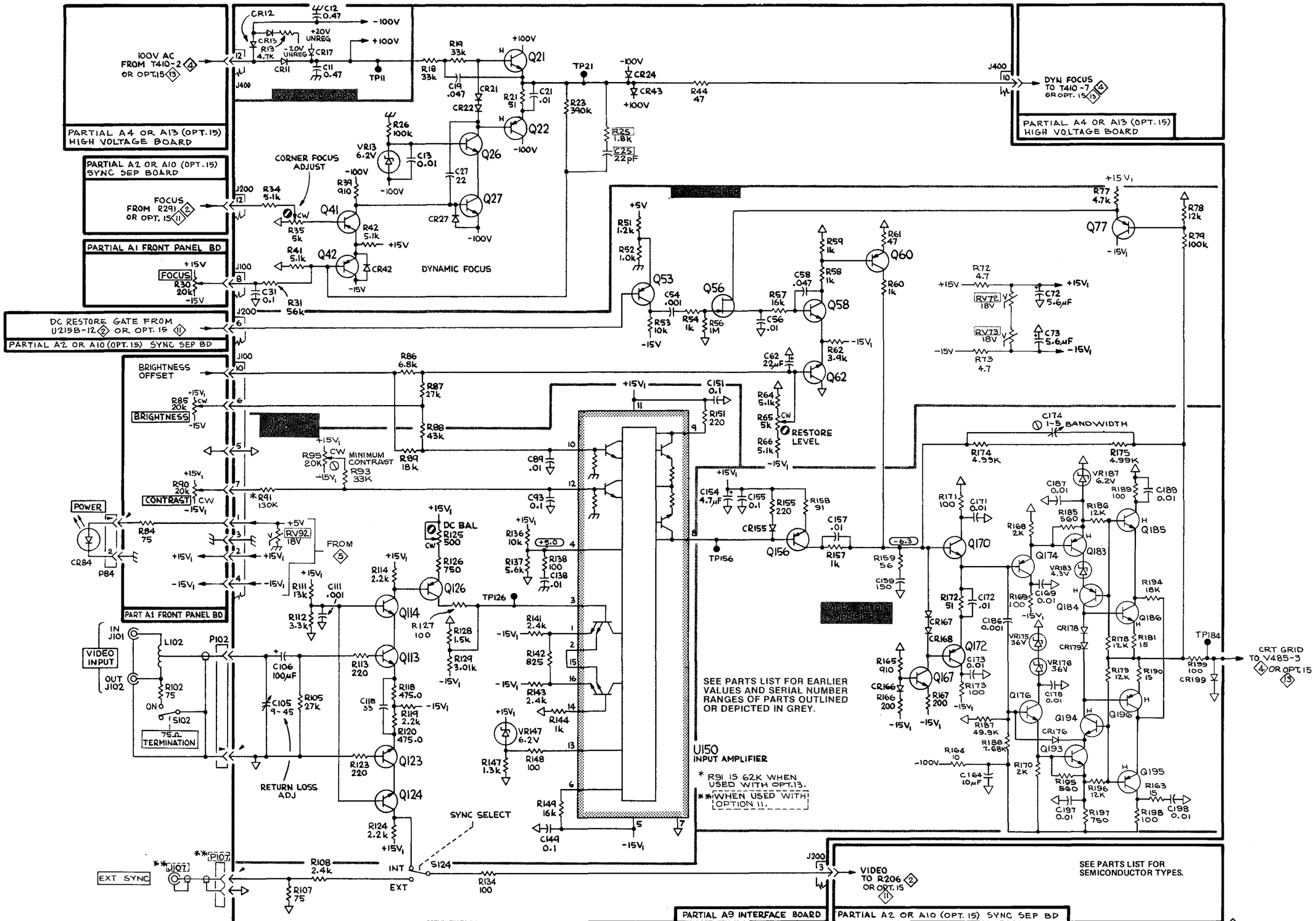

2561-49
REV, MAY 1984

20 MHz VIDEO AMPLIFIER (OPTION 14) 10

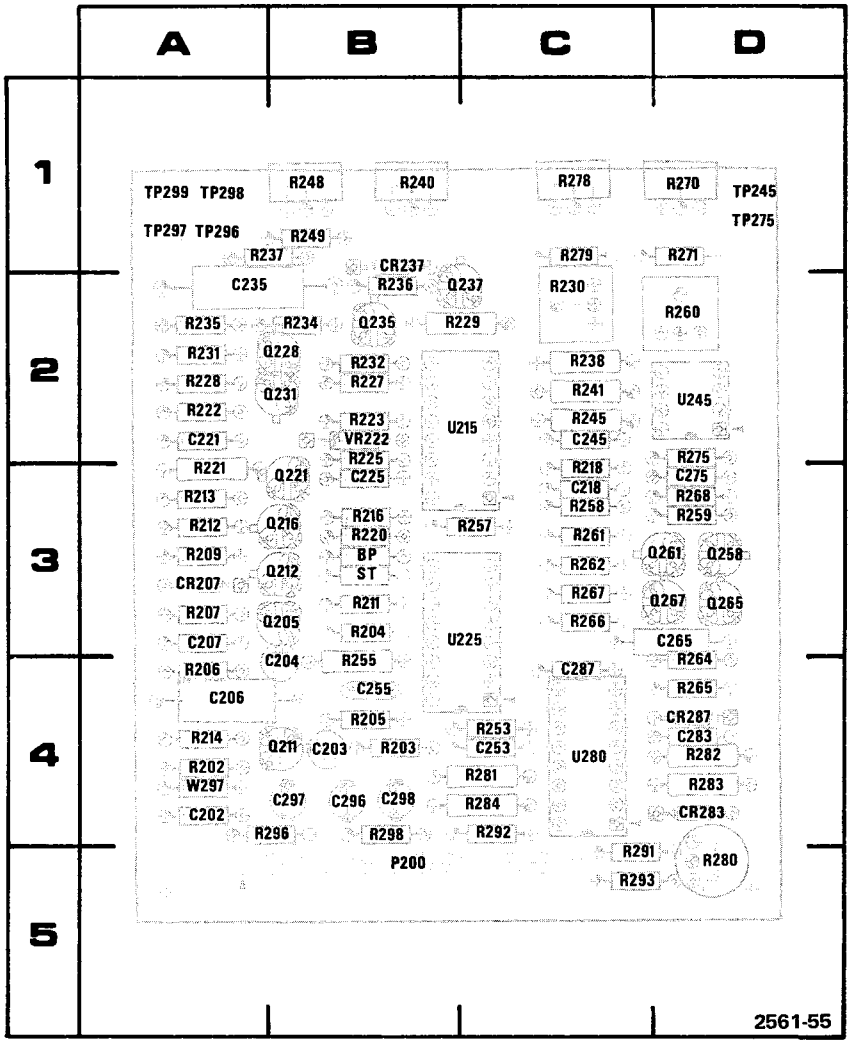

Figure 9-12. A10—Sync Separator (Option 15) components.

CKT NO	GRID LOC	CKT NO	GRID LOC	CKT NO	GRID LOC	CKT NO	GRID LOC	CKT NO	GRID LOC	CKT NO	GRID LOC
C202	4A	CR207	3A	R202	4A	R230	2C	R264	3D	TP245	1D
C203	4B	CR237	1B	R203	4B	R231	2A	R265	4D	TP275	1D
C204	4A	CR283	4D	R204	3B	R232	2B	R266	3C	TP296	1A
C206	4A	CR287	4D	R205	4B	R234	2B	R267	3C	TP297	1A
C207	3A			R206	4A	R235	2A	R268	3D	TP298	1A
C218	3C	P200	5B	R207	3A	R236	2B	R270	1D	TP299	1A
C221	2A			R209	3A	R237	1A	R271	1D		
C225	3B	Q205	3B	R211	3B	R238	2C	R275	3D	U215	2B
C235	1A	Q211	4A	R212	3A	R240	1B	R278	1C	U225	3B
C245	2C	Q212	3B	R213	3A	R241	2C	R279	1C	U245	2D
C253	4C	Q216	3B	R214	4A	R245	2C	R280	3D	U280	4C
C255	4B	Q221	3B	R216	3B	R248	1B	R281	4C		
C259	3D	Q228	2B	R218	3C	R249	1B	R282	4D	VR222	2B
C265	3D	Q231	2B	R220	3B	R253	4C	R283	4D		
C275	3D	Q235	2B	R221	3A	R255	4B	R284	4C	W297	4H
C283	4D	Q237	2B	R222	2A	R257	3B	R291	5C		
C287	4C	Q258	3D	R223	2B	R258	3C	R292	4C		
C296	4B	Q261	3D	R225	3B	R259	3D	R293	5C		
C297	4B	Q265	3D	R227	2B	R260	2D	R296	4B		
C298	4B	Q267	3D	R228	2A	R261	3C	R298	4B		
				R229	2B	R262	3C				

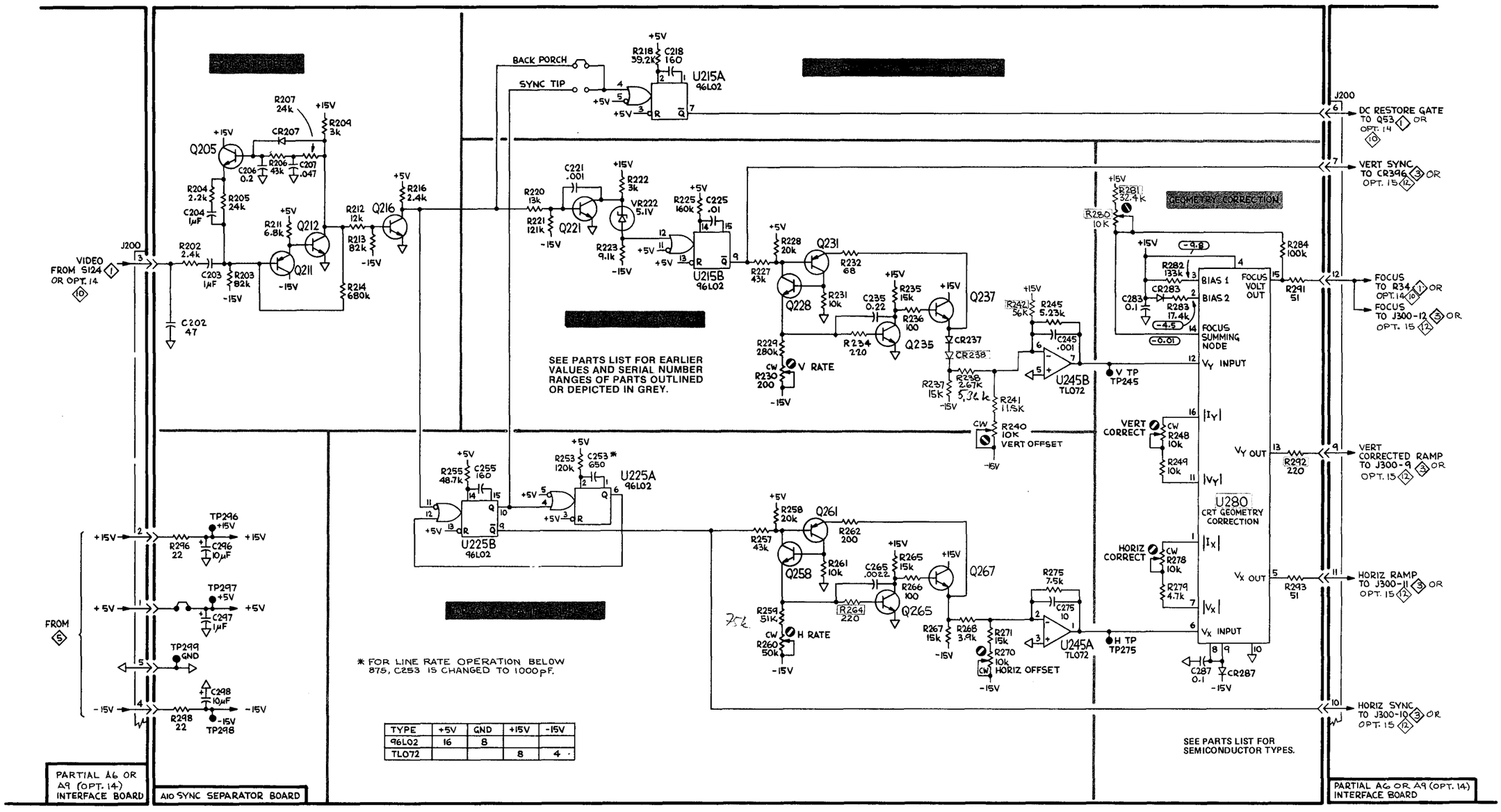

2561-50
REV, MAY 84

SYNC SEPARATOR (OPTION 15) 11

SYNC SEPARATOR (OPTION 15)

11

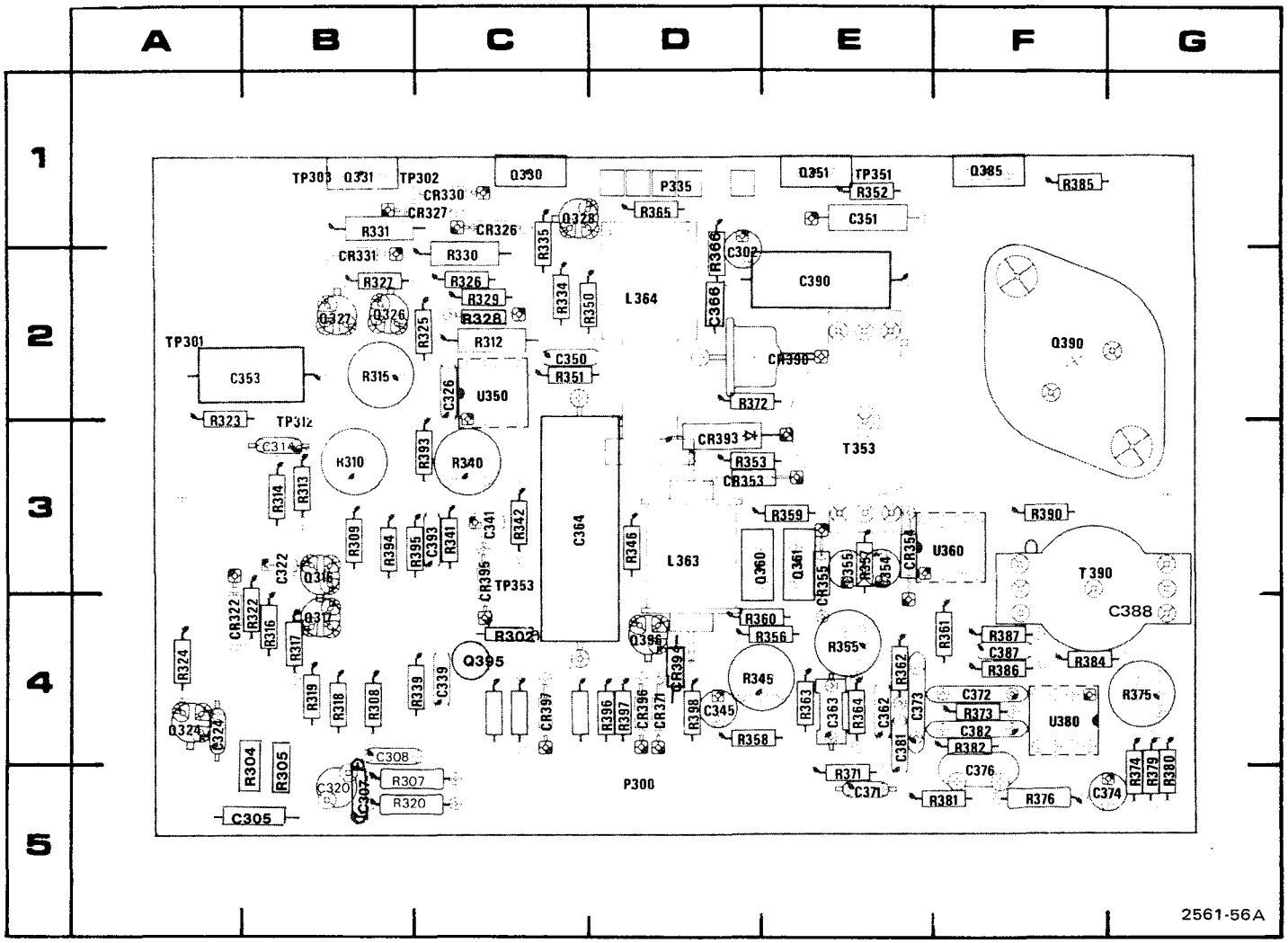

Figure 9-13. A11—Yoke Driver (Option 15) components.

CKT NO	GRID LOC	CKT NO	GRID LOC	CKT NO	GRID LOC	CKT NO	GRID LOC	CKT NO	GRID LOC	CKT NO	GRID LOC	CKT NO	GRID LOC	CKT NO	GRID LOC
C302	2D	C373	4E	CR394*	4D	Q385	1F	R325	2C	R357	3E	R385	1F	U350	2C
C307*	5B	C374	5F	CR395	3C	Q390	2F	R326	2C	R358	4D	R386	4F	U360	3E
C308	4B	C376	5F	CR396	4D	Q395	4C	R327	2B	R359	3E	R387	4F	U380	4F
C314	3B	C381	4E	CR397	4C	Q396	4D	R328	2D	R360	4D	R390	3F		
C320	5B	C382	4F					R329	2C	R361	4F	R393	3C		
C322	3B	C387	4F	L363	3D	R307	5C	R330	2C	R362	4E	R394	3B		
C324	4A	C388†	4G	L364	2D	R308	4B	R331	1B	R363	4E	R395	3C		
C326	2C	C390	2E			R309	3B	R334	2C	R364	4E	R396	4D		
C339	4C	C393	3C	P300	5D	R310	3B	R335	2C	R365	1D	R397	4D		
C341	3C			P335	1D	R312	2C	R339	4C	R366		R398	4D		
C345	4D	CR322	4A			R313	3B	R340	3C	R371	5E				
C350	2C	CR326	1C	Q316	3B	R314	3B	R341	3C	R372	2D	T353	3E		
C351	1E	CR327	1C	Q317	4B	R315	2B	R342	3C	R373	4F	T390	3F		
C353	2A	CR328	2C	Q324	4A	R316	4B	R345	4D	R374	5G				
C354	3E	CR330	1C	Q326	2B	R317	4B	R346	3D	R375	4G	TP301	2A		
C355	3E	CR331	2B	Q327	2B	R318	4B	R350	2D	R376	5F	TP302	1B		
C362	4E	CR353	3D	Q328	1C	R319	4B	R351	2C	R379	5G	TP303	1B		
C363	4E	CR354	3E	Q330	1C	R320	5C	R352	1E	R380	5G	TP312	2B		
C364	3C	CR355	3E	Q331	1B	R322	4B	R353	3D	R381	5F	TP351	1E		
C366		CR371	4D	Q351	1E	R323	3A	R355	4E	R382	4F	TP353	3C		
C371	5E	CR390	2E	Q360	3D	R324	4A	R356	4D	R384	4F				
C372	4F	CR393	3D	Q361	3E										

†Located on

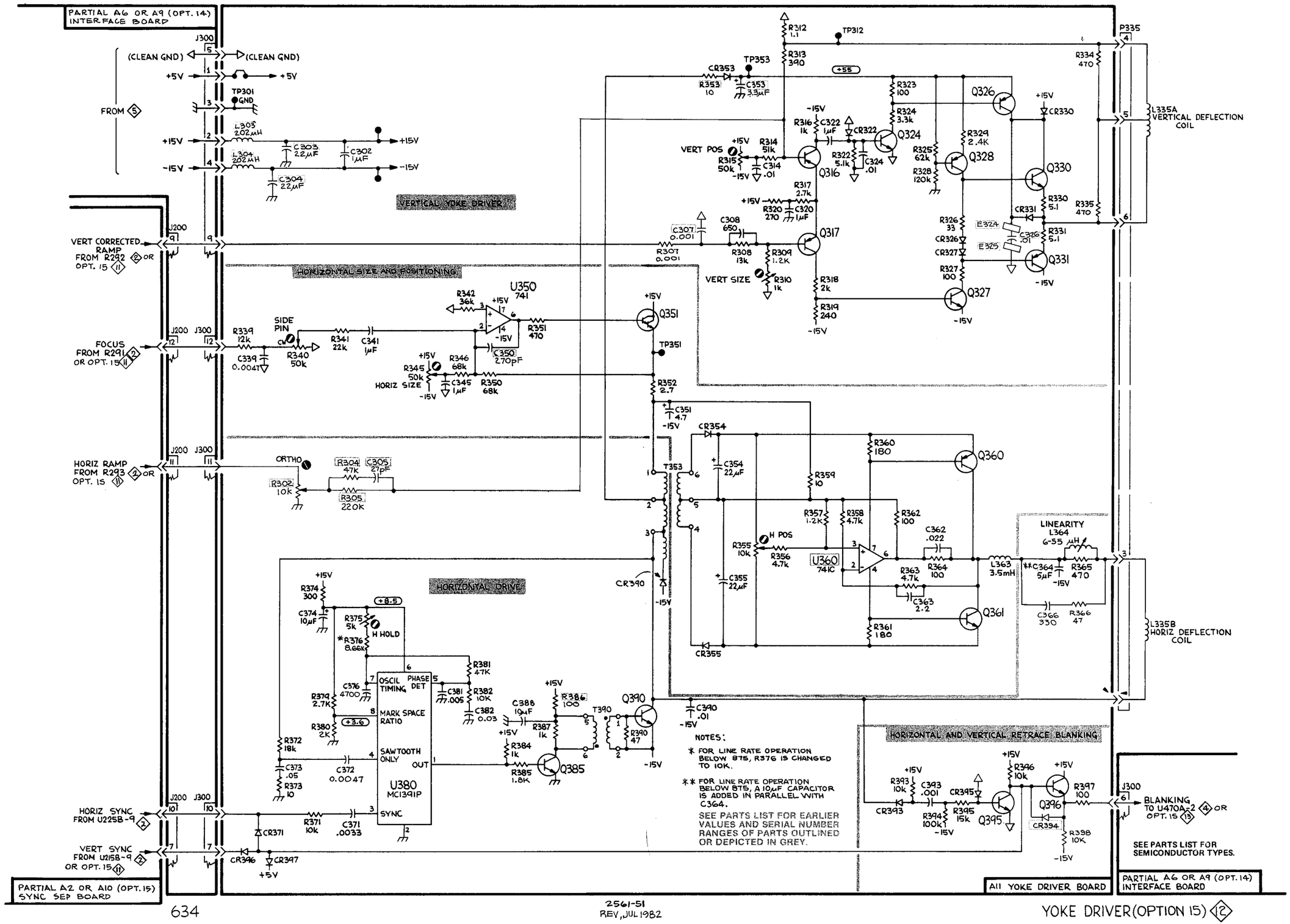

ck of board.

2561-51
REV, JUL 1982

YOKE DRIVER (OPTION 15) 12

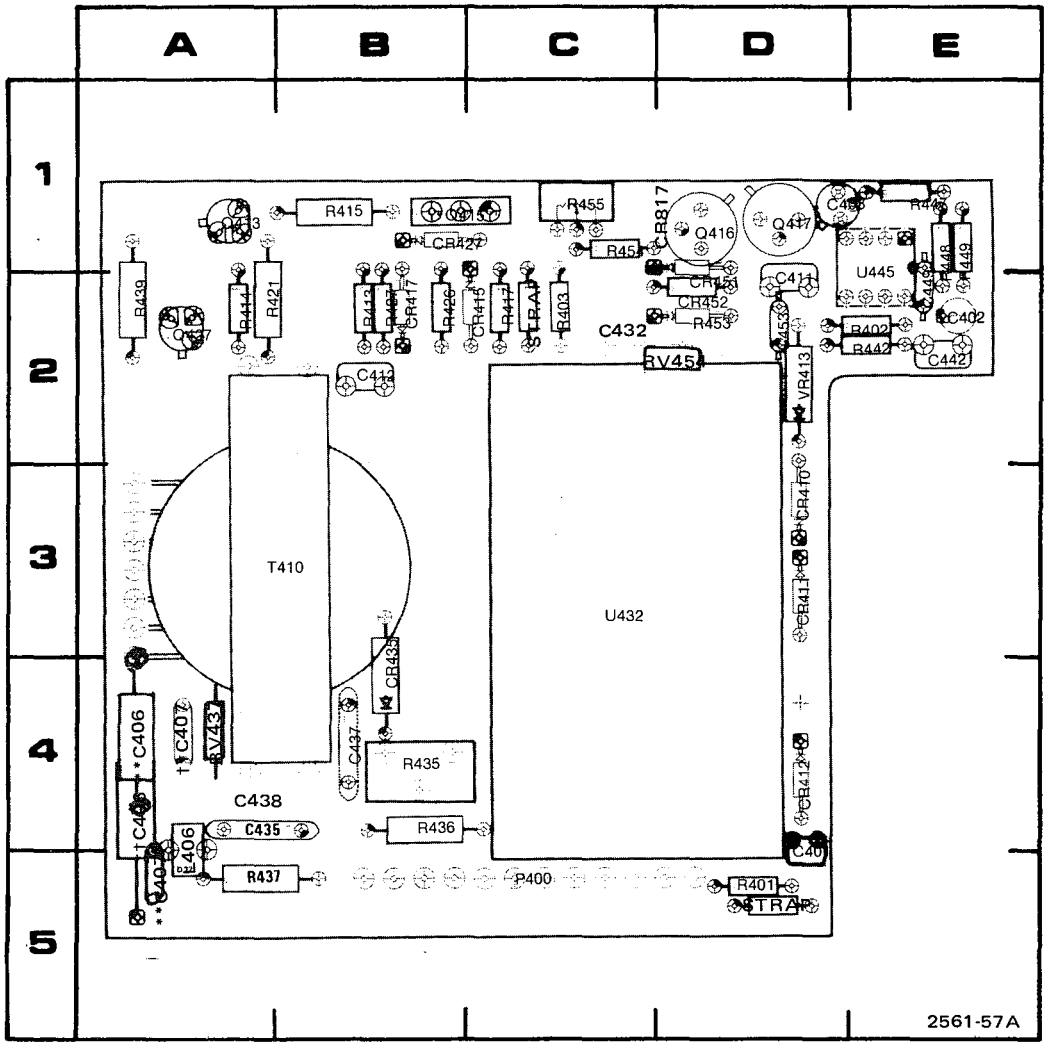

Figure 9-14. A13—High Voltage (Option 15) components.

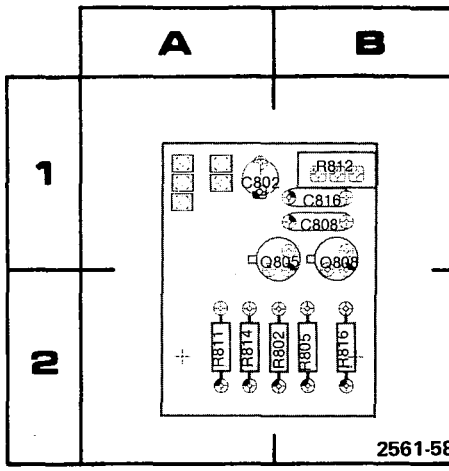

Figure 9-15. A12—Current Limiter (Option 15) components.

CKT NO	GRID LOC
C802	1A
C808	1B
C816	1B
Q805	1B
Q808	1B
R802	2A
R805	2B
R811	2A
R814	2A
R816	2B

CKT NO	GRID COORD	CKT NO	GRID COORD	CKT NO	GRID COORD	CKT NO	GRID COORD
C401	5D	CR415	2C	Q427	2A	R442	2E
C402	2E	CR417	2B			R447	1E
C403	1D	CR427	1B	R401	5D	R448	2E
C406**	4A	CR435 §	4B	R402	2E	R449	2E
C406††	4A	CR435△	4B	R403	2C	R453	2D
C407**	5A	CR451	2C	R413	2B	R454	1C
C407††	4A	CR452	2D	R414	2A	R455	1C
C411	1D	CR817†	1C	R415	1B		
C412	2B			R417	2C	RV437*†	4A
C432†	2C	L406	5A	R421	2A	RV454*†	2D
C435	4A			R426	2B	T410	3B
C437	4B	P400	5C	R427	2B		
C442	2E			R435 §	4B	U432	3C
C449	2E	Q413	1A	R435△	4B	U445	IE
C453	2D	Q415	1B	R436	4B		
		Q416	1D	R437	5B	VR413	2D
CR410	3D	Q417	1D	R439	2A		
CR411	3D						
CR412	4D						

*See Parts List for serial number ranges.

†Located on back of board

††C406, C407 original position SN B019999 & below

**C406, C407 relocated to new Position SN B020000 & up

§CR435, R435 located on front of board SN B019999 & below

△CR435, R435 located on back of board SN B020000 & up

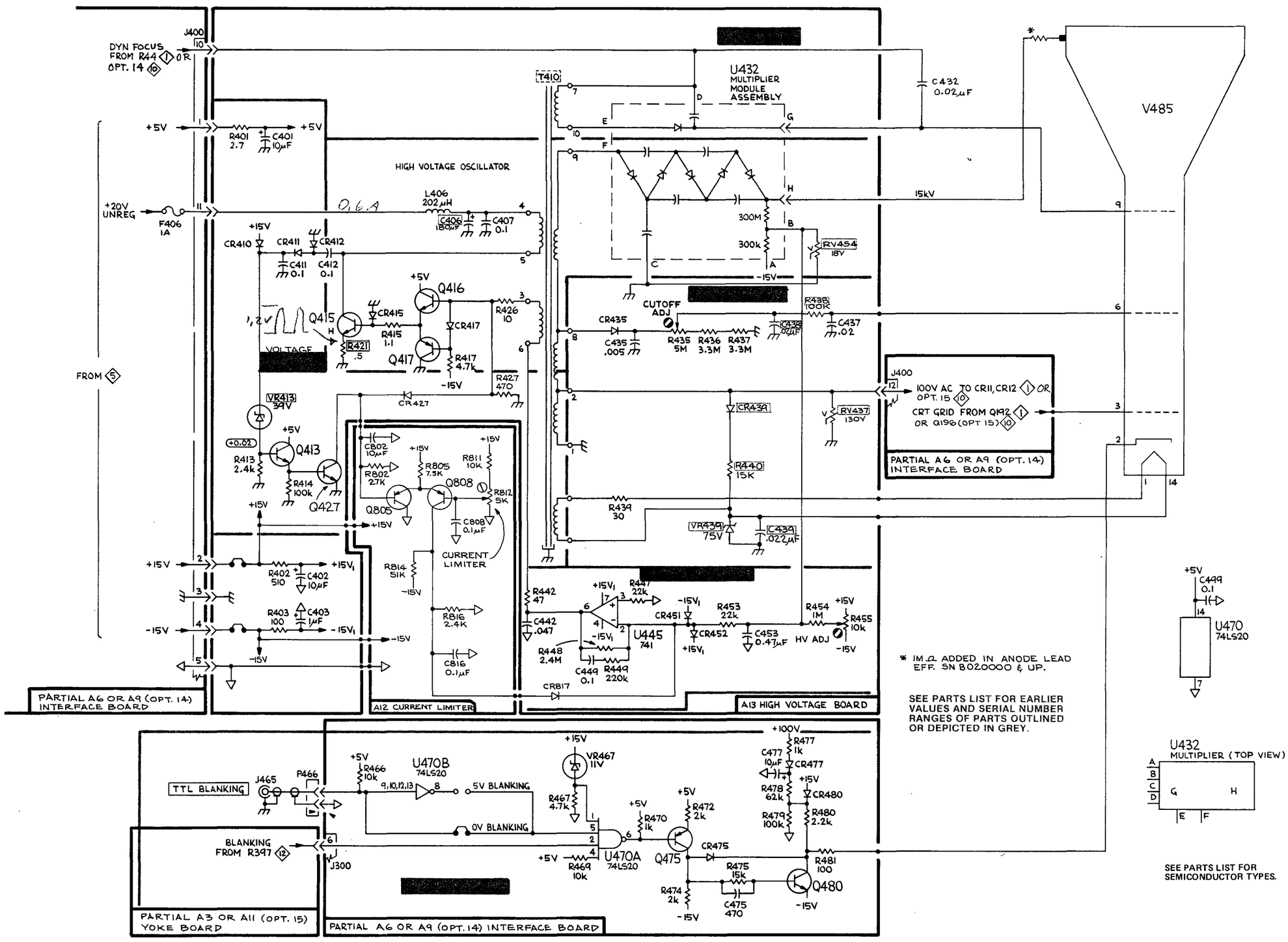

BLANKING AMPL & HIGH VOLTAGE(OPTION 15) 13

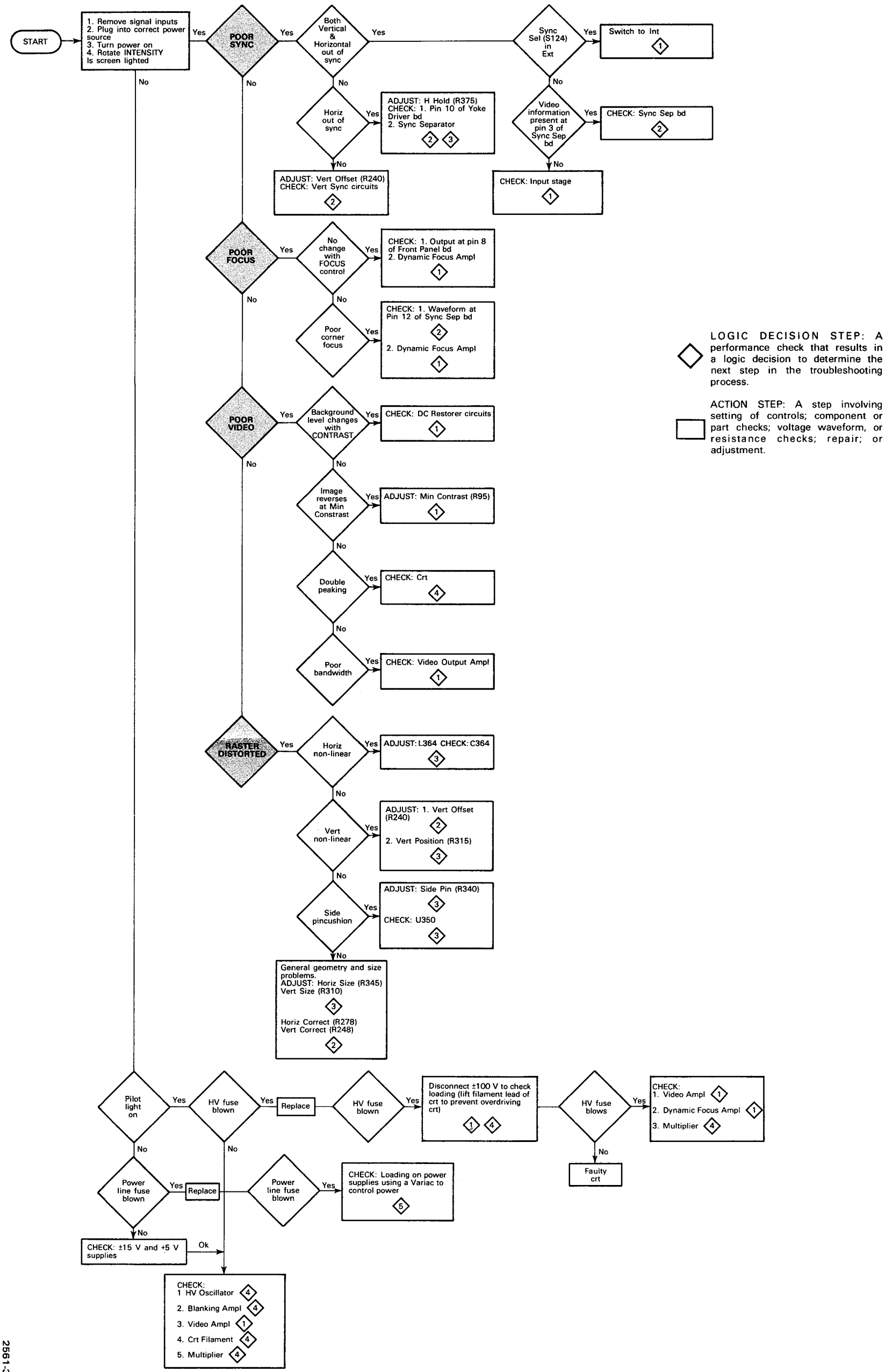

LOGIC DECISION STEP: A performance check that results in a logic decision to determine the next step in the troubleshooting process.

ACTION STEP: A step involving setting of controls; component or part checks; voltage waveform, or resistance checks; repair; or adjustment.

Figure 9-16. 634 Troubleshooting chart.

2561-33

TROUBLESHOOTING HINT:
Plug-in circuit boards are provided with removable straps in each input power line to facilitate isolation of the individual supplies with their loads.

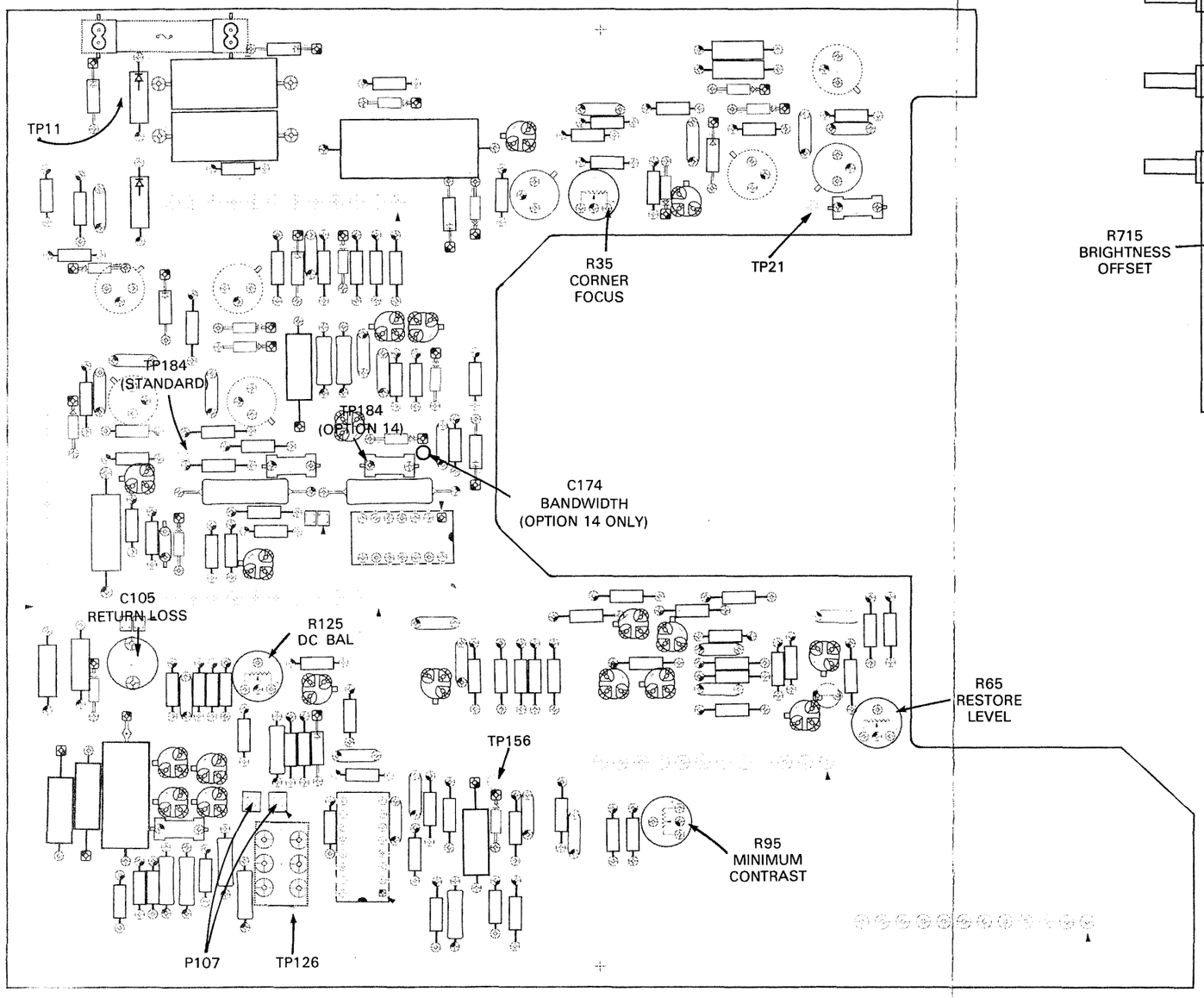

INTERFACE

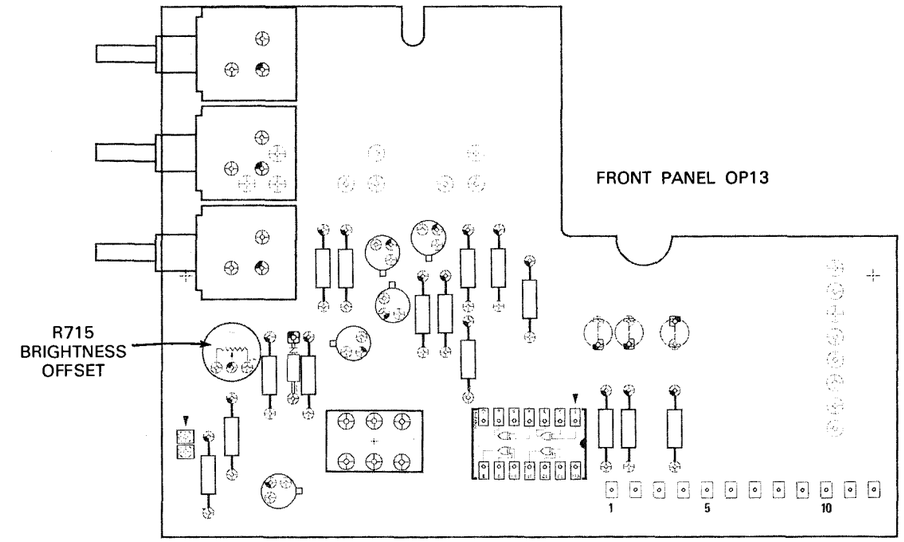

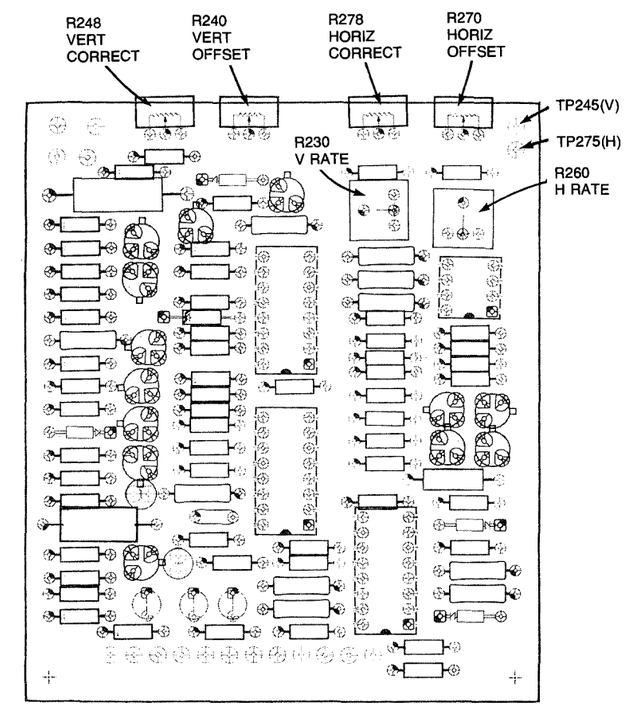

SYNC SEP

Figure 9-17. Test point and adjustment locations.

REV, MAY 1981

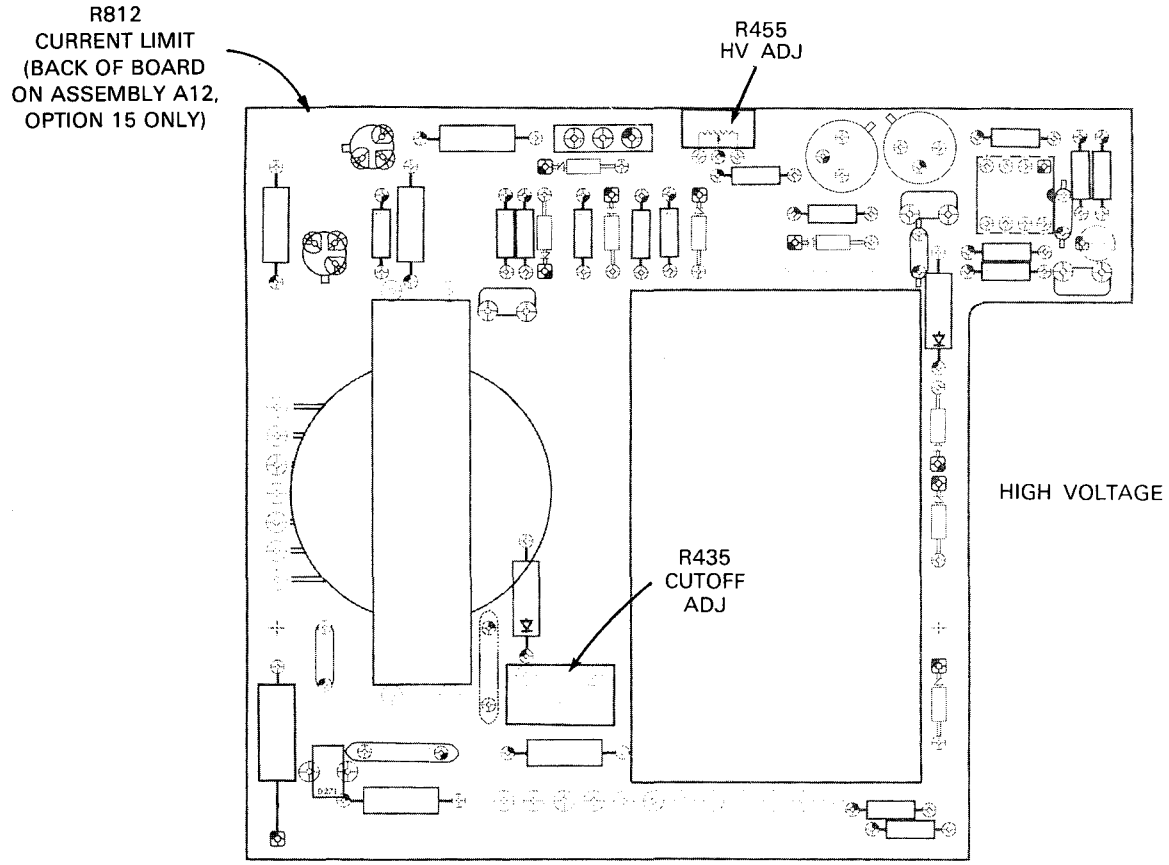

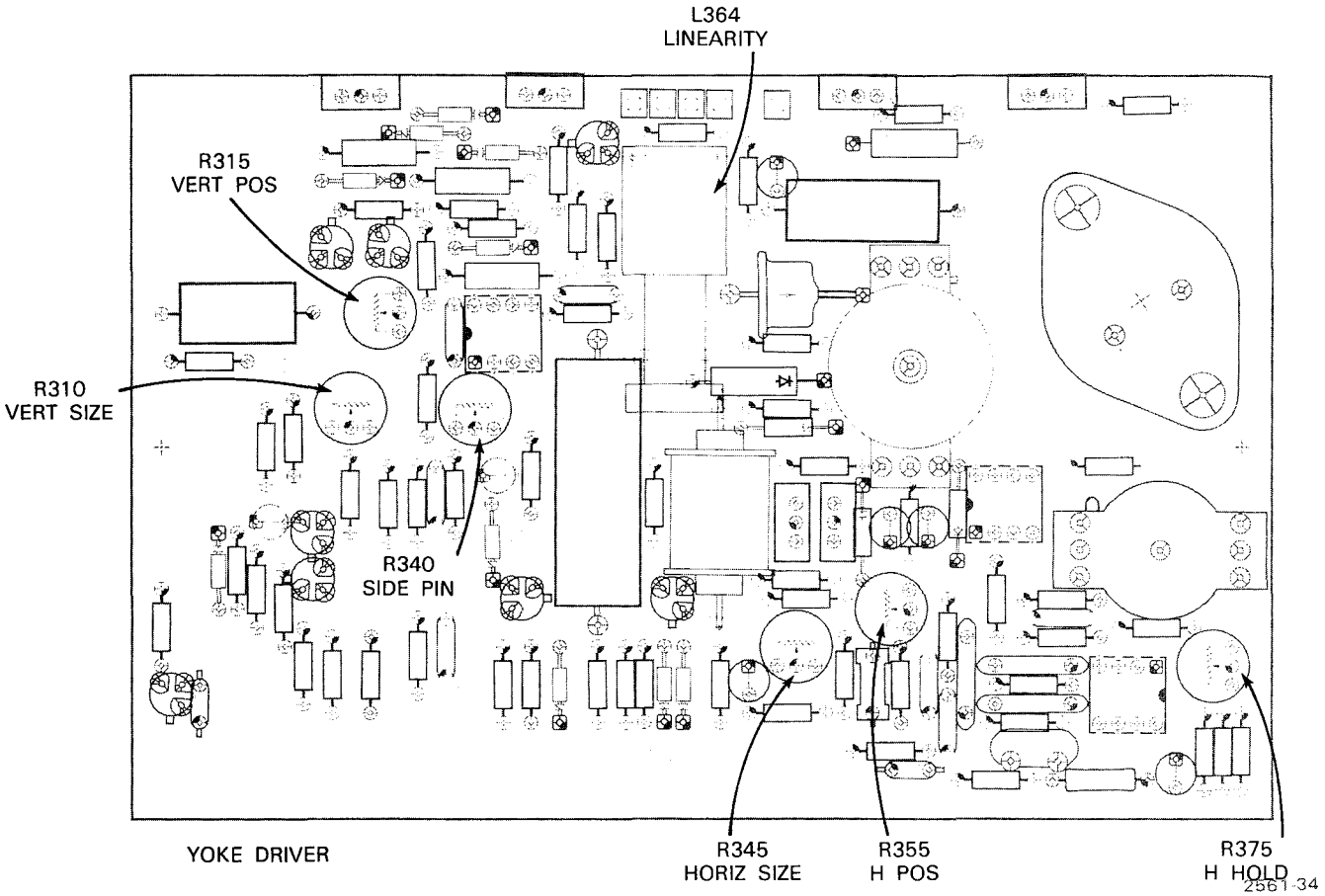

English to Metric Conversion

Inches	Centimeters
0.010	0.025
0.014	0.035
0.015	0.038
0.018	0.045
0.034	0.086
0.066	0.167
0.730	1.854
0.780	1.981
0.800	2.032
1.110	2.819
1.125	2.857
1.320	3.353
1.410	3.581
1.424	3.617
1.610	4.089
1.710	4.343
1.824	4.633
2.220	5.639
2.610	6.629
2.624	6.665
3.530	8.966
3.850	9.779
5.220	13.259
5.475	13.906
5.865	14.897
6.375	16.192
7.125	18.097
7.320	18.593
8.424	21.397
14.460	36.728
16.670	42.341

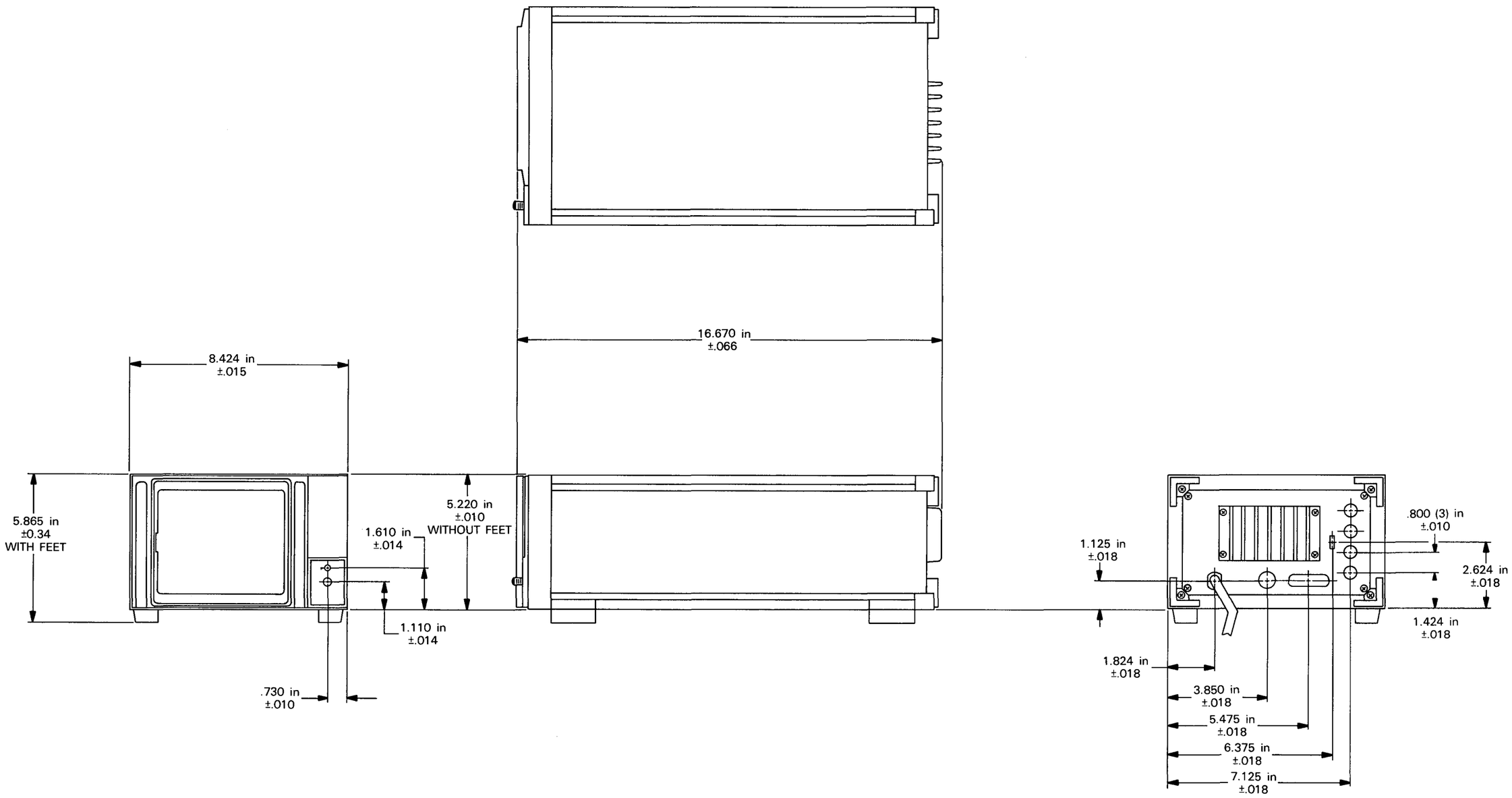

Figure 9-18. Detailed dimensional drawing.

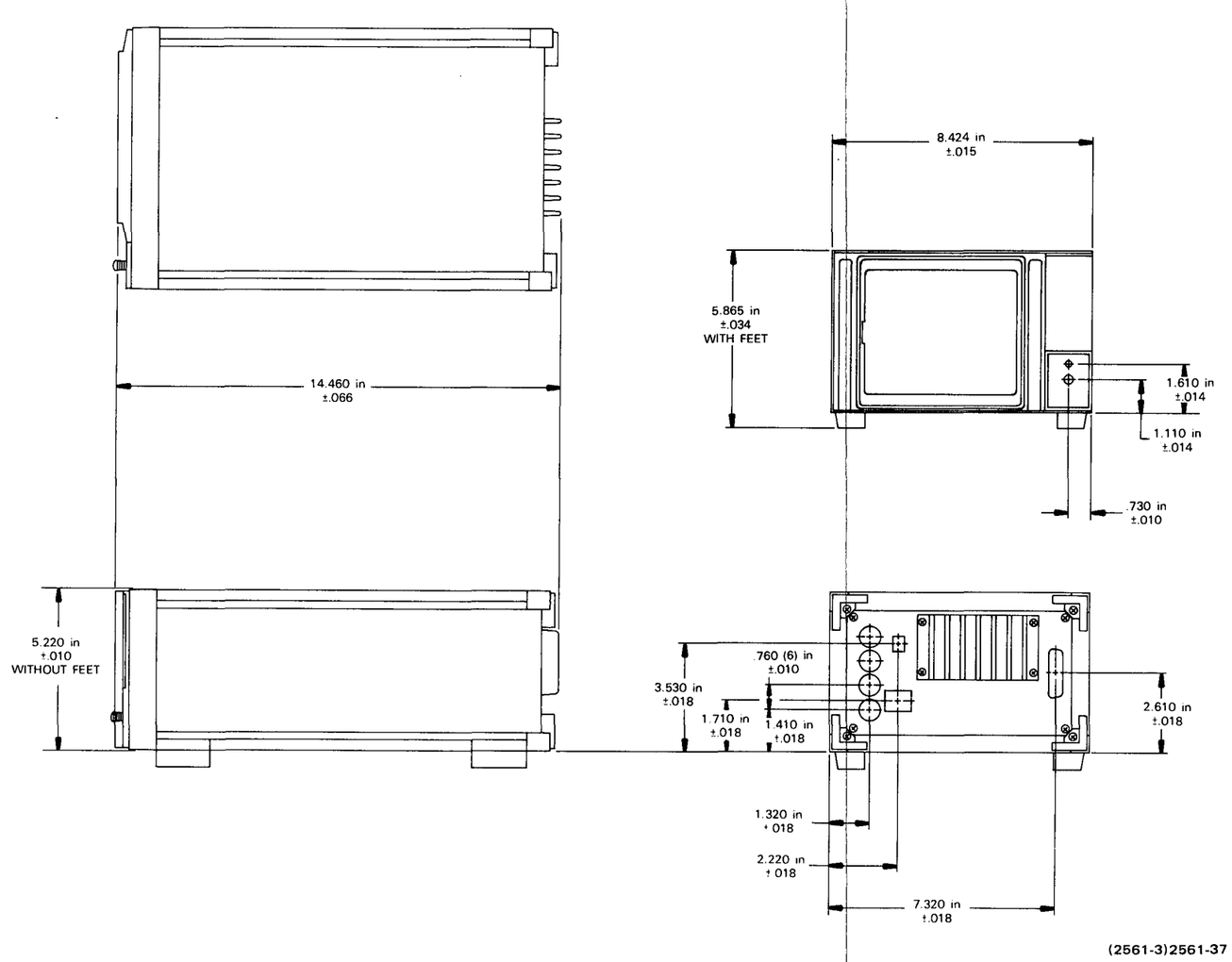

English to Metric Conversion

Inches	Centimeters
0.010	0.025
0.014	0.035
0.015	0.038
0.018	0.045
0.034	0.086
0.066	0.167
0.730	1.854
0.780	1.981
0.800	2.032
1.110	2.819
1.125	2.857
1.320	3.353
1.410	3.581
1.424	3.617
1.610	4.089
1.710	4.343
1.824	4.633
2.220	5.639
2.610	6.629
2.624	6.665
3.530	8.966
3.850	9.779
5.220	13.259
5.475	13.906
5.865	14.897
6.375	16.192
7.125	18.097
7.320	18.593
8.424	21.397
14.460	36.728
16.670	42.341

Figure 9-19. Detailed dimensional drawing(Option 20 only).

REPLACEABLE MECHANICAL PARTS

PARTS ORDERING INFORMATION

Replacement parts are available from or through your local Tektronix, Inc. Field Office or representative.

Changes to Tektronix instruments are sometimes made to accommodate improved components as they become available, and to give you the benefit of the latest circuit improvements developed in our engineering department. It is therefore important, when ordering parts, to include the following information in your order: Part number, instrument type or number, serial number, and modification number if applicable.

If a part you have ordered has been replaced with a new or improved part, your local Tektronix, Inc. Field Office or representative will contact you concerning any change in part number.

Change information, if any, is located at the rear of this manual.

SPECIAL NOTES AND SYMBOLS

X000	Part first added at this serial number
00X	Part removed after this serial number

FIGURE AND INDEX NUMBERS

Items in this section are referenced by figure and index numbers to the illustrations.

INDENTATION SYSTEM

This mechanical parts list is indented to indicate item relationships. Following is an example of the indentation system used in the description column.

1 2 3 4 5 Name & Description

Assembly and/or Component
Attaching parts for Assembly and/or Component
- - - * - - -
Detail Part of Assembly and/or Component
Attaching parts for Detail Part
- - - * - - -
Parts of Detail Part
Attaching parts for Parts of Detail Part
- - - * - - -

Attaching Parts always appear in the same indentation as the item it mounts, while the detail parts are indented to the right. Indented items are part of, and included with, the next higher indentation. The separation symbol - - - * - - - indicates the end of attaching parts.

Attaching parts must be purchased separately, unless otherwise specified.

ITEM NAME

In the Parts List, an Item Name is separated from the description by a colon (:). Because of space limitations, an Item Name may sometimes appear as incomplete. For further Item Name identification, the U.S. Federal Cataloging Handbook H6-1 can be utilized where possible.

ABBREVIATIONS

"	INCH
#	NUMBER SIZE
ACTR	ACTUATOR
ADPTR	ADAPTER
ALIGN	ALIGNMENT
AL	ALUMINUM
ASSEM	ASSEMBLED
ASSY	ASSEMBLY
ATTEN	ATTENUATOR
AWG	AMERICAN WIRE GAGE
BD	BOARD
BRKT	BRACKET
BRS	BRASS
BRZ	BRONZE
BSHG	BUSHING
CAB	CABINET
CAP	CAPACITOR
CER	CERAMIC
CHAS	CHASSIS
CKT	CIRCUIT
COMP	COMPOSITION
CONN	CONNECTOR
COV	COVER
CPLG	COUPLING
CRT	CATHODE RAY TUBE
DEG	DEGREE
DWR	DRAWER
ELCTRN	ELECTRON
ELEC	ELECTRICAL
ELCTLT	ELECTROLYTIC
ELEM	ELEMENT
EPL	ELECTRICAL PARTS LIST
EQPT	EQUIPMENT
EXT	EXTERNAL
FIL	FILLISTER HEAD
FLEX	FLEXIBLE
FLH	FLAT HEAD
FLTR	FILTER
FR	FRAME or FRONT
FSTNR	FASTENER
FT	FOOT
FXD	FIXED
GSKT	GASKET
HDL	HANDLE
HEX	HEXAGON
HEX HD	HEXAGONAL HEAD
HEX SOC	HEXAGONAL SOCKET
HLCPS	HELICAL COMPRESSION
HLEXT	HELICAL EXTENSION
HV	HIGH VOLTAGE
IC	INTEGRATED CIRCUIT
ID	INSIDE DIAMETER
IDENT	IDENTIFICATION
IMPLR	IMPELLER
IN	INCH
INCAND	INCANDESCENT
INSUL	INSULATOR
INTL	INTERNAL
LPHLDR	LAMPHOLDER
MACH	MACHINE
MECH	MECHANICAL
MTG	MOUNTING
NIP	NIPPLE
NON WIRE	NOT WIRE WOUND
OBD	ORDER BY DESCRIPTION
OD	OUTSIDE DIAMETER
OVH	OVAL HEAD
PH BRZ	PHOSPHOR BRONZE
PL	PLAIN or PLATE
PLSTC	PLASTIC
PN	PART NUMBER
PNH	PAN HEAD
PWR	POWER
RCPT	RECEPTACLE
RES	RESISTOR
RGD	RIGID
RLF	RELIEF
RTNR	RETAINER
SCH	SOCKET HEAD
SCOPE	OSCILLOSCOPE
SCR	SCREW
SE	SINGLE END
SECT	SECTION
SEMICOND	SEMICONDUCTOR
SHLD	SHIELD
SHLDR	SHOULDERED
SKT	SOCKET
SL	SLIDE
SLFLKG	SELF-LOCKING
SLVG	SLEEVING
SPR	SPRING
SQ	SQUARE
SST	STAINLESS STEEL
STL	STEEL
SW	SWITCH
T	TUBE
TERM	TERMINAL
THD	THREAD
THK	THICK
TNSN	TENSION
TPG	TAPPING
TRH	TRUSS HEAD
V	VOLTAGE
VAR	VARIABLE
W	WITH
WSHR	WASHER
XFMR	TRANSFORMER
XSTR	TRANSISTOR

CROSS INDEX - MFR. CODE NUMBER TO MANUFACTURER

Mfr. Code	Manufacturer	Address	City, State, Zip Code
00261	GENERAL ELECTRIC CO FOOD SERVICE EQUIPMENT BUSINESS DEPT	14TH AND ARNOLD STS	CHICAGO HEIGHTS IL 60411
00779	AMP INC	2800 FULLING MILL PO BOX 3608	HARRISBURG PA 17105
03984	GENERAL ELECTRIC CO SEMI-CONDUCTOR PRODUCTS DEPT		CLYDE NY
05820	EG AND G WAKEFIELD ENGINEERING	60 AUDUBON RD	WAKEFIELD MA 01880-1203
06915	RICHCO PLASTIC CO	5825 N TRIPP AVE	CHICAGO IL 60646-6013
06950	SCREWCORP VSI AEROSPACE PRODUCTS DIV SUB OF FAIRCHILD INDUSTRIES INC	13001 E TEMPLE AVE PO BOX 730	CITY OF INDUSTRY CA 91746-1417
08261	SPECTRA-STRIP AN ELTRA CO	7100 LAMPSON AVE	GARDEN GROVE CA 92642
09922	BURNDY CORP	RICHARDS AVE	NORWALK CT 06852
12327	FREEWAY CORP	9301 ALLEN DR	CLEVELAND OH 44125-4632
12360	ALBANY FASTENERS PAWTUCKET FASTERNER DIV	327 PINE ST PO BOX 879	PAWTUCKET RI 02862
13103	THERMALLOY CO INC	2021 W VALLEY VIEW LN PO BOX 810839	DALLAS TX 75381
13511	AMPHENOL CADRE DIV BUNKER RAMO CORP		LOS GATOS CA
16037	SPRUCE PINE MICA CO INC	PO BOX 219	SPRUCE PINE NC 28777-0219
22526	DU PONT E I DE NEMOURS AND CO INC DU PONT CONNECTOR SYSTEMS DIV MILITARY PRODUCTS GROUP	515 FISHING CREEK RD	NEW CUMBERLAND PA 17070-3007
23050	PRODUCT COMPONENTS CORP	30 LORRAINE AVE	MT VERNON NY 10553-1222
24546	CORNING GLASS WORKS	550 HIGH ST	BRADFORD PA 16701-3737
26365	GRIES DYNACAST CO DIV OF COATS AND CLARK INC	125 BEECHWOOD AVE	NEW ROCHELLE NY 10802
27264	MOLEX INC	2222 WELLINGTON COURT	LISLE IL 60532-1613
28520	HEYCO MOLDED PRODUCTS	750 BOULEVARD P O BOX 160	KENILWORTH NJ 07033-1721
70485	ATLANTIC INDIA RUBBER WORKS INC	571 W POLK ST	CHICAGO IL 60607
71468	ITT CANNON DIV OF ITT CORP	10550 TALBERT AVE PO BOX 8040	FOUNTAIN VALLEY CA 92728-8040
72228	AMCA INTERNATIONAL CORP CONTINENTAL SCREW CO DIV	459 MT PLEASANT	NEW BEDFORD MA 02742
73743	FISCHER SPECIAL MFG CO	111 INDUSTRIAL RD	COLD SPRING KY 41076-9749
75915	LITTELFUSE TRACTOR INC SUB TRACTOR INC	800 E NORTHWEST HWY	DES PLAINES IL 60016-3049
77900	SHAKEPROOF DIV OF ILLINOIS TOOL WORKS	SAINT CHARLES RD	ELGIN IL 60120
78189	ILLINOIS TOOL WORKS INC SHAKEPROOF DIV	ST CHARLES ROAD	ELGIN IL 60120
80009	TEKTRONIX INC	14150 SW KARL BRAUM DR PO BOX 500 MS 53-111	BEAVERTON OR 97077
81350	JOINT ARMY-NAVY SPECIFICATIONS, PROMULGATED BY MILITARY DEPARTMENTS UNDER AUTHORITY OF DEFENSE STANDARD- IZATION MANUAL 4120 3-M		
83309	ELECTRICAL SPECIALITY CO SUBSIDIARY OF BELDEN CORP	345 SWIFT AVE	SOUTH SAN FRANCISCO CA 94080-6206
83385	MICRODOT MFG INC GREER-CENTRAL DIV	3221 W BIG BEAVER RD	TROY MI 48098
83486	ELCO INDUSTRIES INC	1101 SAMUELSON RD	ROCKFORD IL 61101
85471	BOYD CORP	13885 RAMOMA AVE	CHINO CA 91710
86928	SEASTROM MFG CO INC	701 SONORA AVE	GLENDALE CA 91201-2431
93907	TEXTRON INC CAMCAR DIV	600 18TH AVE	ROCKFORD IL 61101
95238	CONTINENTAL CONNECTOR CORP	34-63 56TH ST	WOODSIDE NY 11377-2121
95987	WECKESSER CO INC	4444 WEST IRVING PARK RD	CHICAGO IL 60641
98978	INTERNATIONAL ELECTRONIC RESEARCH CORP	135 W MAGNOLIA BLVD PO BOX 7704	BURBANK CA 91502
S3629	SCHURTER AG H C/O PANEL COMPONENTS CORP	2015 SECOND STREET	BERKELEY CA 94170
TK0191	SONY TEKTRONIX	PO BOX 14 HANEDA AIRPORT	TOKYO JAPAN
TK0435	LEWIS SCREW CO	4300 S RACINE AVE	CHICAGO IL 60609-3320
TK0456	ARROW FASTERNERS INC	2112 AMERICAN AVE	HAYWARD CA 94545

CROSS INDEX - MFR. CODE NUMBER TO MANUFACTURER

Mfr. Code	Manufacturer	Address	City, State, Zip Code
TK0858	STAUFFER SUPPLY CO	105 SE TAYLOR	PORTLAND OR 97214
TK1386	PYRAMID/INTERFACE	8623 S 212TH ST	KENT WA 98031-1910
TK1452	SHELLY-RAGON INC (DIST)	919 SW 150TH PO BOX 66708	SEATTLE WA 98166-1829

Fig. & Index No.	Tektronix Part No.	Serial/Assembly No. Effective	Dscont	Qty	12345 Name & Description	Mfr. Code	Mfr. Part No.
1-1	426-1468-00			1	FRAME,MASK:PLASTIC	80009	426-1468-00
-2	200-2193-00			1	COVER,OPENING:LEFT,CRT RETAINER	80009	200-2193-00
	200-2192-00			1	COVER,OPENING:RIGHT,CRT RETAINER	80009	200-2192-00
-3	200-2143-01			1	RTNR,CRT SCALE:6.0 CRT,ALUMINUM	80009	200-2143-01
					(ATTACHING PARTS)		
-4	213-0808-00			4	SCREW,TPG,TR:8-32 X 0.625 L,TAPTITE,FILH	83486	239-006-408062
					(END ATTACHING PARTS)		
-5	337-2537-00			1	SHLD,IMPLOSION:5.854 X 4.714 X 0.09,CLEAR S	80009	337-2537-00
					AFETY CONTROLLED		
-6	200-2190-00			1	DOOR,ACCESS PNL:	80009	200-2190-00
-7	384-1508-00			1	EXTENSION SHAFT:12.855 L X 0.125 OD,AL	80009	384-1508-00
					(REMOVE FOR OPTION 20)		
-8	366-1564-00			3	KNOB:GY,0.312 OD X 0.868 H	80009	366-1564-00
-9	333-2445-00			1	PANEL,FRONT:UPPER	80009	333-2445-00
					(ATTACHING PARTS)		
-10	210-0457-00			2	NUT,PL,ASSEM WA:6-32 X 0.312,STL CD PL	78189	511-061800-00
					(END ATTACHING PARTS)		
-11	358-0216-00			1	GROMMET,PLASTIC:GRAY,ROUND,0.257 ID	80009	358-0216-00
					(REMOVE FOR OPTION 20)		
-12	333-2444-00	B010100	B032450	1	PANEL,FRONT:LOWER	80009	333-2444-00
					(REMOVE FOR OPTION 20)		
	333-2444-01	B032451		1	PANEL,FRONT:LOWER	80009	333-2444-01
					(REMOVE FOR OPTION 20)		
					(ATTACHING PARTS)		
-13	210-0457-00			1	NUT,PL,ASSEM WA:6-32 X 0.312,STL CD PL	78189	511-061800-00
-14	210-1001-00			1	WASHER,FLAT:0.119 ID X 0.375 OD X 0.021	12360	ORDER BY DESCR
					(END ATTACHING PARTS)		
-15	----- -----			1	LT EMITTING DIO:(SEE CR770 REPL)		
-16	386-3929-00			1	SUBPANEL,FRONT:	80009	386-3929-00
	334-3460-00			1	MARKER,IDENT:MARKED WARNING,X-RADIATION	80009	334-3460-00
-17	----- -----			1	ELECTRON TUBE:(SEE V485 REPL)		
-17.1	214-0276-00	B032575	B071307	1	CONTACT,ELEC:GROUNDING,CU BE CD PL	80009	214-0276-00
	214-1061-00	B071308		1	CONTACT,ELEC:GROUNDING,CU BE	80009	214-1061-00
-17.2	175-2297-00			1	CA ASSY,SP,ELEC:5,22 AWG,13.5 L	80009	175-2297-00
					(STD, OPTION 15 ONLY)		
-17.3	131-0621-00			5	.CONN,TERM:22-26 AWG,BRS,CU BE GLD PL	22526	46231-000
-17.4	352-0202-03			1	.HLDR,TERM CONN:6 WIRE,ORANGE	80009	352-0202-03
-17.5	175-0860-00			AR	.CABLE,SP,ELEC:5,22 AWG,STRD,PVC JKT,RBN	TK0846	05CF22M7-BBT
-17.6	----- -----			1	COIL,TUBE DEFLECTION:(SEE L335 REPL)		
-18	343-0751-00	B010100	B071380	4	CLP,ELCTRN TUBE:CRT,6 INCH,NYLON,GRAY	80009	343-0751-00
	343-0751-01	B071381		4	CLP,ELCTRN TUBE:CRT,6 INCH,NYLON,GRAY	80009	343-0751-01
					(ATTACHING PARTS)		
-19	211-0675-00	B010100	B010219	4	SCREW,MACHINE:6-32 X 0.75 L,FLH,90 DEG,	93907	ORDER BY DESCR
	211-0669-00	B010220	B071380	4	SCREW,MACHINE:6-32 X 0.75,PNH,SST	83486	ORDER BY DESCR
	211-0694-00	B071381		4	SCREW,MACHINE:6-32 X 1.125,PNH SST	83385	ORDER BY DESCR
					(END ATTACHING PARTS)		
-20	426-1461-01	B010100	B010219	1	FRAME,CABINET:6.0 CRT,FRONT,5.25 X 0.5	80009	426-1461-01
	426-1461-04	B010220	B030100	1	FRAME,CABINET:FRONT	80009	426-1461-04
	426-1461-07	B030101		1	FRAME,CABINET:FRONT	80009	426-1461-07
					(ATTACHING PARTS)		
-21	213-0760-00			4	SCREW,TPG,TF:8-32 X 0.875,SPCL TAPTITE,FILH	72228	ORDER BY DESCR
					(END ATTACHING PARTS)		
-22	343-0002-00			1	CLAMP,LOOP:0.187 ID,PLASTIC	06915	E3 CLEAR ROUND
					(ATTACHING PARTS)		
-23	211-0507-00			1	SCREW,MACHINE:6-32 X 0.312,PNH,STL	83385	ORDER BY DESCR
-24	210-0863-00			1	WSHR,LOOP CLAMP:0.187 ID U/W 0.5 W CLP	95987	C191
					(END ATTACHING PARTS)		
-25	385-0013-00			1	SPACER,POST:0.75 L W/6-32 THD THRU,NYL	80009	385-0013-00
					(ATTACHING PARTS)		
-26	211-0507-00			1	SCREW,MACHINE:6-32 X 0.312,PNH,STL	83385	ORDER BY DESCR
					(END ATTACHING PARTS)		
-27	----- -----			1	CKT BOARD ASSY:FRONT PANEL CONTROL		
					(SEE A1 REPL)		
					(ATTACHING PARTS)		
-28	211-0507-00			1	SCREW,MACHINE:6-32 X 0.312,PNH,STL	83385	ORDER BY DESCR
					(END ATTACHING PARTS)		
					CKT BOARD ASSY INCLUDES:		
-29	----- -----			3	.RES VAR:(SEE R30,R85,R90 REPL)		

Fig. & Index No.	Tektronix Part No.	Serial/Assembly No. Effective	Dscont	Qty	12345 Name & Description	Mfr. Code	Mfr. Part No.
1-30	131-0566-00			3	.BUS,CONDUCTOR:DUMMY RES,0.094 OD X 0.225 L	24546	OMA 07
-31	131-1782-00			1	.CONN,RCPT,ELEC:RTANG,12 FEM,0.045 SQ PIN	TK1386	09-52-3121
-32	131-0608-00			2	.TERMINAL,PIN:0.365 L X 0.025 BRZ GLD PL	22526	48283-036
-33	210-3057-00			2	WASHER,FLAT:0.17 ID X 0.35 OD X 0.03,NYL	TK1452	ORDER BY DESCR
-34	385-0080-00			1	SPACER,POST:0.437 L W/6-32 THD THRU,AL	80009	385-0080-00
					(ATTACHING PARTS)		
-35	211-0511-00			1	SCREW,MACHINE:6-32 X 0.5,PNH,STL	TK0435	ORDER BY DESCR
					(END ATTACHING PARTS)		
-36	131-2228-00			1	CONTACT,ELEC:PHOSPHOR BRONZE	80009	131-2228-00
					(ATTACHING PARTS)		
-37	210-0457-00			1	NUT,PL,ASSEM WA:6-32 X 0.312,STL CD PL	78189	511-061800-00
-38	211-0507-00			1	SCREW,MACHINE:6-32 X 0.312,PNH,STL	83385	ORDER BY DESCR
					(END ATTACHING PARTS)		
-39	----- -----			1	CKT BOARD ASSY:YOKE DRIVER(SEE A3,A16 REPL)		
					(ATTACHING PARTS)		
-40	211-0511-00			2	SCREW,MACHINE:6-32 X 0.5,PNH,STL	TK0435	ORDER BY DESCR
					(END ATTACHING PARTS)		
					CKT BOARD ASSY INCLUDES:		
-41	131-1782-00			1	.CONN,RCPT,ELEC:RTANG,12 FEM,0.045 SQ PIN	TK1386	09-52-3121
-42	131-0566-00			3	.BUS,CONDUCTOR:DUMMY RES,0.094 OD X 0.225 L	24546	OMA 07
	131-0566-00	B031250		2	.BUS,CONDUCTOR:DUMMY RES,0.094 OD X 0.225 L	24546	OMA 07
					.(REMOVE FOR OPTION 20 ONLY)		
-43	342-0082-00			5	.INSULATOR,PLATE:TRANSISTOR,ALUMINA	80009	342-0082-00
-44	344-0236-00			4	.CLIP,SPR TNSN:XSTR MTG,CU BE BRIGHT DIP	80009	344-0236-00
-45	----- -----			1	.TRANSISTOR:(SEE Q390 REPL)		
					.(ATTACHING PARTS)		
-46	210-0407-00			2	.NUT,PLAIN,HEX:6-32 X 0.25,BRS CD PL	73743	3038-402
-47	211-0578-00			2	.SCREW,MACHINE:6-32 X 0.438,PNH,STL	TK0435	ORDER BY DESCR
					.(END ATTACHING PARTS)		
-48	361-0020-00			2	.INSULATOR,WSHR:0.156 ID X 0.3 OD X 0.78	80009	361-0020-00
-49	386-0978-00			1	.INSULATOR,PLATE:TRANSISTOR,MICA	16037	#130
-50	407-2120-00	B010100	B032450	1	.BRACKET,ANGLE:TRANSISTOR MTG,ALUMINUM	80009	407-2120-00
	407-2120-01	B032451		1	.BRACKET,ANGLE:TRANSISTOR MTG,ALUMINUM	80009	407-2120-01
					.(ATTACHING PARTS)		
-51	211-0507-00			1	.SCREW,MACHINE:6-32 X 0.312,PNH,STL	83385	ORDER BY DESCR
-52	210-0055-00			1	.WASHER,LOCK:#6 SPLIT,0.031 THK,STL	81350	ORDER BY DESCR
					.(END ATTACHING PARTS)		
-53	131-0589-00			5	.TERMINAL,PIN:0.46 L X 0.025 SQ PH BRZ	22526	48283-029
-54	214-0579-00			6	.TERM,TEST POINT:BRS CD PL	80009	214-0579-00
-55	136-0514-00			3	.SKT,PL-IN ELEK:MICROCIRCUIT,8 DIP	09922	DILB8P-108
-55.1	342-0483-00			1	INSULATOR,PLATE:TRANSISTORS,FIBER SHEET	80009	342-0483-00
-56	343-0750-00			1	RETAINER,CKT BD:ABS,BLACK	80009	343-0750-00
					(ATTACHING PARTS)		
-57	210-0457-00			1	NUT,PL,ASSEM WA:6-32 X 0.312,STL CD PL	78189	511-061800-00
-58	211-0513-00			1	SCREW,MACHINE:6-32 X 0.625,PNH,STL	93907	B80-00032-003
					(END ATTACHING PARTS)		
-59	----- -----			1	CKT BOARD ASSY:SYNC SEPARATOR(SEE A2 REPL)		
-60	131-1782-00			1	.CONN,RCPT,ELEC:RTANG,12 FEM,0.045 SQ PIN	TK1386	09-52-3121
-61	131-0566-00			2	.BUS,CONDUCTOR:DUMMY RES,0.094 OD X 0.225 L	24546	OMA 07
-62	136-0260-02			3	.SKT,PL-IN ELEK:MICROCIRCUIT,16 DIP	09922	DILB16P-108T
-63	214-0579-00			6	.TERM,TEST POINT:BRS CD PL	80009	214-0579-00
-64	136-0514-00			1	.SKT,PL-IN ELEK:MICROCIRCUIT,8 DIP	09922	DILB8P-108
-65	337-2572-00			1	SHIELD SECT,CRT:REAR	80009	337-2572-00
-66	136-0700-00			1	SKT,PL-IN ELEK:ELCTRN TUBE,6 CONT,W/LEADS	80009	136-0700-00
-67	136-0266-01			1	.SKT,PL-IN ELEK:ELCTRN TUBE,12 CONT	TK0191	136-0266-01
-68	348-0070-01			3	PAD,CUSHIONING:2.03 X 0.69 X 0.18 SI RBR	85471	ORDER BY DESCR
-69	252-0571-03			1	NEOPRENE EXTR:CHAN 0.270 X 0.017	80009	252-0571-03
-70	337-2568-00			1	SHIELD,ELEC:HIGH VOLTAGE	80009	337-2568-00
					(ATTACHING PARTS)		
-71	213-0789-00	B010100	B010199	4	SCREW,TPG,TF:6-32 X 0.375,TAPTITE,PNH,STL	93907	234-21860-024
	213-0041-00	B010200	B033729	4	SCREW,TPG,TC:6-32 X 0.375,TYPE T,TRH,STL	93907	ORDER BY DESCR
	213-0789-00	B033730		4	SCREW,TPG,TF:6-32 X 0.375,TAPTITE,PNH,STL	93907	234-21860-024
					(END ATTACHING PARTS)		
-72	----- -----			1	CKT BOARD ASSY:HIGH VOLTAGE(SEE A4 REPL)		
					(ATTACHING PARTS)		
-73	211-0511-00			2	SCREW,MACHINE:6-32 X 0.5,PNH,STL	TK0435	ORDER BY DESCR
					(END ATTACHING PARTS)		
					CKT BOARD ASSY INCLUDES:		

Fig. & Index No.	Tektronix Part No.	Serial/Assembly No. Effective	Dscont	Qty	12345 Name & Description	Mfr. Code	Mfr. Part No.
1-74	131-1782-00			1	.CONN,RCPT,ELEC:RTANG,12 FEM,0.045 SQ PIN	TK1386	09-52-3121
-75	----- -----			1	.MULTIPLIER,HV:(SEE U432 REPL)		
-76	361-0007-00			2	.SPACER,SLEEVE:0.188 L X 0.111 ID,POLTHN	80009	361-0007-00
-77	136-0514-00			1	.SKT,PL-IN ELEK:MICROCIRCUIT,8 DIP	09922	DILB8P-108
-78	131-0566-00			2	.BUS,CONDUCTOR:DUMMY RES,0.094 OD X 0.225 L	24546	OMA 07
-79	----- -----			1	.TRANSISTOR:(SEE Q415 REPL)		
					.(ATTACHING PARTS)		
-80	211-0097-00			1	.SCREW,MACHINE:4-40 X 0.312,PNH,STL	TK0435	ORDER BY DESCR
-81	210-1171-00			1	.WASHER,SHLDR:0.12 ID X 0.143 OD X 0.07 D	00261	A7148516P2
					.(END ATTACHING PARTS)		
-82	342-0163-00			1	.INSULATOR,PLATE:TRANSISTOR,MICA	80009	342-0163-00
-83	407-2123-00			1	.BRACKET,ANGLE:TRANSISTOR MTG,ALUMINUM	80009	407-2123-00
					.(ATTACHING PARTS)		
-84	211-0504-00			1	.SCREW,MACHINE:6-32 X 0.250,PNH,STL	TK0435	ORDER BY DESCR
					.(END ATTACHING PARTS)		
-85	210-0006-00			1	.WASHER,LOCK:#6 INTL,0.018 THK,STL	77900	1206-00-00-0541C
	334-3363-00			1	.MARKER,IDENT:MARKED WARNING	80009	334-3363-00
-85.1	----- -----	B072000		1	.CKT BD ASSY:CURRENT LIMITER(SEE A4A1 REPL)		
-86	131-2228-00	B010100	B061200	1	CONTACT,ELEC:PHOSPHOR BRONZE	80009	131-2228-00
	131-2228-01	B061201		1	CONTACT,ELEC:PHOSPHOR BRONZE	80009	131-2228-01
					(ATTACHING PARTS)		
-87	211-0529-00			1	SCREW,MACHINE:6-32 X 1.250,PNH,STL	TK0435	ORDER BY DESCR
					(END ATTACHING PARTS)		
	210-0863-00			1	WSHR,LOOP CLAMP:0.187 ID U/W 0.5 W CLP	95987	C191
	343-0002-00			1	CLAMP,LOOP:0.187 ID,PLASTIC	06915	E3 CLEAR ROUND
-88	361-0169-00			1	SPACER,SLEEVE:0.68 L X 0.18 ID,AL	80009	361-0169-00
-89	210-0006-00			1	WASHER,LOCK:#6 INTL,0.018 THK,STL	77900	1206-00-00-0541C
-90	385-0033-00			1	SPACER,POST:0.625 L W/6-32 THD THRU,NYL	80009	385-0033-00
					(REMOVE FOR OPTION 20)		
					(ATTACHING PARTS)		
-91	211-0507-00			1	SCREW,MACHINE:6-32 X 0.312,PNH,STL	83385	ORDER BY DESCR
					(REMOVE FOR OPTION 20)		
					(END ATTACHING PARTS)		
-92	343-0088-00	B010100	B033729	1	CLAMP,CABLE:0.062 DIA,PLASTIC	80009	343-0088-00
	343-0213-00	B033730		1	CLAMP,CABLE:0.2 ID,PLASTIC	80009	343-0213-00
-93	----- -----			1	CKT BOARD ASSY:INTERFACE (SEE A6 REPL)		
					(ATTACHING PARTS)		
-94	213-0793-00			5	SCREW,TPG,TF:6-32 X 0.4375,TAPTITE,FILH	83486	239-006-406043
					(END ATTACHING PARTS)		
					CKT BOARD ASSY INCLUDES:		
-95	214-0579-00			5	.TERM,TEST POINT:BRS CD PL	80009	214-0579-00
-96	136-0252-04			3	.SOCKET,PIN TERM:U/W 0.016-0.018 DIA PINS	22526	75060-007
-97	136-0260-02			1	.SKT,PL-IN ELEK:MICROCIRCUIT,16 DIP	09922	DILB16P-108T
-98	131-0608-00			6	.TERMINAL,PIN:0.365 L X 0.025 BRZ GLD PL	22526	48283-036
-99	136-0269-02			1	.SKT,PL-IN ELEK:MICROCIRCUIT,14 DIP	09922	DILB14P-108T
-100	131-0566-00			4	.BUS,CONDUCTOR:DUMMY RES,0.094 OD X 0.225 L	24546	OMA 07
-101	131-1783-00	B010100	B032450	4	.CONN,RCPT,ELEC:FD-THRU,12 MALE,TIN PLATED S	27264	09-64-1123
					.AFETY CONTROLLED		
	131-1783-01	B032451		4	.CONN,RCPT,ELEC:CKT BD,12 MALE,TIN PLATED	27264	09-64-1127
-102	214-1291-00			6	.HEAT SINK,XSTR:TO-5,SIL BRZ PTD BLACK	05820	207SB
-103	342-0324-00			6	.INSULATOR,DISK:TRANSISTOR,NYLON	13103	7717-5N-BLUE
	129-0143-00	B010821		1	.SPACER,POST:0.406 L,4-40 THRU,NYLON	80009	129-0143-00
					.(ATTACHING PARTS)		
	211-0040-00	B010821		1	.SCREW,MACHINE:4-40 X 0.25,BDGH,NYL	26365	ORDER BY DESCR
					.(END ATTACHING PARTS)		
-104	344-0154-00			2	.CLIP,ELECTRICAL:FUSE,CKT BD MT	80009	344-0154-00
-105	131-1782-00			1	.CONN,RCPT,ELEC:RTANG,12 FEM,0.045 SQ PIN	TK1386	09-52-3121
-106	376-0127-00			1	CPLG,SHAFT,FLEX:0.055 & 0.326 ID,DELRIN	80009	376-0127-00
					(REMOVE FOR OPTION 20)		
-107	----- -----			1	SWITCH,PR:(SEE S515 REPL)		
					(REMOVE FOR OPTION 20)		
-108	----- -----			1	CKT BOARD ASSY:POWER SUPPLY(SEE A5 REPL)		
					(REMOVE FOR OPTION 20)		
					(ATTACHING PARTS)		
-109	220-0410-00			1	NUT,PL,ASSEM WA:10-32 X 0.375 HEX,STL CD PL	78189	511-101800-50
					(REMOVE FOR OPTION 20)		
-110	210-0812-00			1	WASHER,FLAT:0.188 ID X 0.375 OD X 0.31	83309	ORDER BY DESCR
					(REMOVE FOR OPTION 20)		

Fig. & Index No.	Tektronix Part No.	Serial/Assembly No. Effective	Dscont	Qty	12345 Name & Description	Mfr. Code	Mfr. Part No.
1-111	210-0805-00			1	WASHER,FLAT:0.204 ID X 0.438 OD X 0.032,STL (REMOVE FOR OPTION 20)	12327	ORDER BY DESCR
-112	212-0632-00			1	SCREW,MACHINE:10-32 X 3.125 L,HEX HD,STL (REMOVE FOR OPTION 20)	TK0456	ORDER BY DESCR
-113	211-0503-00			1	SCREW,MACHINE:6-32 X 0.188,PNH,STL (REMOVE FOR OPTION 20) (END ATTACHING PARTS) CKT BOARD ASSY INCLUDES:	TK0435	ORDER BY DESCR
-114	131-1783-00	B010100	B032450	1	.CONN,RCPT,ELEC:FD-THRU,12 MALE,TIN PLATED S .AFETY CONTROLLED	27264	09-64-1123
	131-1783-01	B032451		1	.CONN,RCPT,ELEC:CKT BD,12 MALE,TIN PLATED	27264	09-64-1127
-115	214-0579-00			4	.TERM,TEST POINT:BRS CD PL	80009	214-0579-00
-116	----- -----			1	.LINK,TERM. CONN:(SE P520 REPL)		
-117	131-0608-00			14	.TERMINAL,PIN:0.365 L X 0.025 BRZ GLD PL	22526	48283-036
-118	----- -----			1	.LINK,TERM. CONN:(SEE P521 REPL)		
-119	361-0741-00			1	SPACER,SLEEVE:0.75 L X 0.245 ID,AL (REMOVE FOR OPTION 20)	80009	361-0741-00
-120	----- -----			1	TRANSFORMER:(SEE T530 REPL) (REMOVE FOR OPTION 20) (ATTACHING PARTS)		
-121	220-0410-00			3	NUT,PL,ASSEM WA:10-32 X 0.375 HEX,STL CD PL (REMOVE FOR OPTION 20)	78189	511-101800-50
-122	210-0812-00			3	WASHER,FLAT:0.188 ID X 0.375 OD X 0.31 (REMOVE FOR OPTION 20)	83309	ORDER BY DESCR
-123	210-0805-00			3	WASHER,FLAT:0.204 ID X 0.438 OD X 0.032,STL (REMOVE FOR OPTION 20)	12327	ORDER BY DESCR
-124	212-0515-00			3	SCREW,MACHINE:10-32 X 2.25,HEX HD,STL (REMOVE FOR OPTION 20) (END ATTACHING PARTS)	TK0435	ORDER BY DESCR
-125	166-0226-00			4	INSUL SLVG,ELEC:0.187 ID X 1.125 L,MYLAR (REMOVE FOR OPTION 20)	80009	166-0226-00
-126	361-0910-00	B010100	B021201	4	SPACER,SLEEVE:0.625 L X 0.196 ID,AL (REMOVE FOR OPTION 20)	80009	361-0910-00
	361-1006-00	B021202	B048899	2	SPACER,XFMR:0.625 THK X 2.5 L X 0.5W,AL (REMOVE FOR OPTION 20)	80009	361-1006-00
	361-1006-01	B048900		2	SPACER,XFMR:0.625 THK X 2.5 L X 0.5 W,AL (REMOVE FOR OPTION 20)	80009	361-1006-01
-127	161-0057-01			1	CABLE ASSY,PWR,:3,16 AWG,125V,96.0 L (REMOVE FOR OPTION 20) (ATTACHING PARTS)	80009	161-0057-01
-128	358-0529-00			1	BSHG,STRAIN RLF:U/W 0.36 DIA CABLE,STRAIGHT SAFETY CONTROLLED (REMOVE FOR OPTION 20) (END ATTACHING PARTS)	28520	207 (UL 6P3-4)
-129	210-0202-00			1	TERMINAL,LUG:0.146 ID,LOCKING,BRZ TIN PL (REMOVE FOR OPTION 20) (ATTACHING PARTS)	86928	A-373-158-2
-130	210-0457-00			1	NUT,PL,ASSEM WA:6-32 X 0.312,STL CD PL (REMOVE FOR OPTION 20) (END ATTACHING PARTS)	78189	511-061800-00
-131	----- -----			1	SWITCH,THRMSTC:(SEE S512 REPL) (REMOVE FOR OPTION 20) (ATTACHING PARTS)		
-132	210-0406-00			3	NUT,PLAIN,HEX:4-40 X 0.188,BRS CD PL (REMOVE FOR OPTION 20)	73743	12161-50
	210-0004-00			2	WASHER,LOCK:#4 INTL,0.015 THK,STL	77900	1204-00-00-0541C
-133	210-0202-00			1	TERMINAL,LUG:0.146 ID,LOCKING,BRZ TIN PL (REMOVE FOR OPTION 20) (END ATTACHING PARTS)	86928	A-373-158-2
-134	200-0865-00			1	COVER,MTG HOLE:2.164 X 0.53,AL (REMOVE FOR OPTION 20) (ATTACHING PARTS)	80009	200-0865-00
-135	210-0586-00			2	NUT,PL,ASSEM WA:4-40 X 0.25,STL CD PL	78189	211-041800-00
-136	211-0097-00			2	SCREW,MACHINE:4-40 X 0.312,PNH,STL (END ATTACHING PARTS)	TK0435	ORDER BY DESCR
-137	131-0955-00			3	CONN,RCPT,ELEC:BNC,FEMALE	13511	31-279
-138	210-0255-00			3	TERMINAL,LUG:0.391 ID,LOCKING,BRS CD PL (REMOVE FOR OPTION 20)	12327	ORDER BY DESCR

Fig. & Index No.	Tektronix Part No.	Serial/Assembly No. Effective	Dscont	Qty	12345 Name & Description	Mfr. Code	Mfr. Part No.
1-139	342-0117-00			6	INSULATOR,BSHG:0.375 ID X 0.625 OD (REMOVE FOR OPTION 20)	80009	342-0117-00
-140	----- -----			1	SWITCH,SLIDE:(SEE S102 REPL) (ATTACHING PARTS)		
-141	210-0405-00			2	NUT,PLAIN,HEX:2-56 X 0.188,BRS CD PL	73743	12157-50
-142	210-0001-00			2	WASHER,LOCK:#2 INTL,0.013 THK,STL	77900	1202-00-00-0541C
-143	211-0062-00			2	SCREW,MACHINE:2-56 X 0.312,PNH,STL (END ATTACHING PARTS)	06950	ORDER BY DESCR
-144	214-2668-00			1	PLUG,HOLE:0.497 DIA,PLASTIC (REMOVE FOR OPTION 20)	80009	214-2668-00
-144.1	131-0995-00	B071322		1	CONN,RCPT,ELEC:CKT BD,28/56 CONTACT	95238	K 600-125-56WB
-144.2	342-0117-00	B071322		2	INSULATOR,BSHG:0.375 ID X 0.625 OD	80009	342-0117-00
-144.3	210-0255-00	B071322		1	TERMINAL,LUG:0.391 ID,LOCKING,BRS CD PL	12327	ORDER BY DESCR
	175-7370-00	B071322		1	CABLE ASSY,RF:75 OHM COAX,11.0 L,9-5	80009	175-7370-00
	131-0707-00			1	.CONTACT,ELEC:22-26 AWG,BRS,CU BE GLD PL	22526	47439-000
	131-0708-00			1	.CONTACT,ELEC:28-32 AWG,BRS,CU BE GLD PL	22526	47437-000
	352-0161-01			1	.HLDR,TERM CONN:3 WIRE,BROWN	80009	352-0161-01
-145	214-2796-00			1	HEAT SINK,ELEC: (ATTACHING PARTS)	80009	214-2796-00
-146	211-0511-00			4	SCREW,MACHINE:6-32 X 0.5,PNH,STL (END ATTACHING PARTS)	TK0435	ORDER BY DESCR
-147	352-0362-01	B010100	B021191	1	FUHLR,EXTR POST:3AG,20A,300V (REMOVE FOR OPTION 20)	75915	345613 W/901002
	204-0837-00	B021192		1	BODY,FUSEHOLDER:3AG,6.3A,250V,PNL MT,UL (REMOVE FOR OPTION 20)	S3629	031.1681
-147.1	200-2264-00	B021192		1	CAP,FUSEHOLDER:3AG FUSES (REMOVE FOR OPTION 20)	S3629	FEK 031 1666
-148	210-0873-00			1	WASHER,FLAT:0.5 ID X 0.688 OD X 0.047,RBR (REMOVE FOR OPTION 20)	70485	ORDER BY DESCR
-149	213-0816-00			1	SCREW,TPG,TC:2-56 X 0.188L,TYPE T,PNH,STL (REMOVE FOR OPTION 20)	TK0858	ORDER BY DESCR
-150	----- -----			1	MICROCIRCUIT:(SEE U533 REPL) (ATTACHING PARTS)		
-151	211-0097-00			1	SCREW,MACHINE:4-40 X 0.312,PNH,STL (REMOVE FOR OPTION 20)	TK0435	ORDER BY DESCR
-152	210-1171-00			1	WASHER,SHLDR:0.12 ID X 0.143 OD X 0.07 D (END ATTACHING PARTS)	00261	A7148516P2
-153	342-0163-00			1	INSULATOR,PLATE:TRANSISTOR,MICA	80009	342-0163-00
-154	----- -----			1	MICROCIRCUIT:(SEE U543 REPL) (ATTACHING PARTS)		
-155	211-0097-00			1	SCREW,MACHINE:4-40 X 0.312,PNH,STL (REMOVE FOR OPTION 20)	TK0435	ORDER BY DESCR
-156	210-1171-00			1	WASHER,SHLDR:0.12 ID X 0.143 OD X 0.07 D (END ATTACHING PARTS)	00261	A7148516P2
-157	342-0163-00			1	INSULATOR,PLATE:TRANSISTOR,MICA	80009	342-0163-00
-158	----- -----			1	MICROCIRCUIT:(SEE U563 REPL) (ATTACHING PARTS)		
-159	211-0097-00			1	SCREW,MACHINE:4-40 X 0.312,PNH,STL (REMOVE FOR OPTION 20)	TK0435	ORDER BY DESCR
-160	210-1171-00			1	WASHER,SHLDR:0.12 ID X 0.143 OD X 0.07 D (END ATTACHING PARTS)	00261	A7148516P2
-161	342-0163-00			1	INSULATOR,PLATE:TRANSISTOR,MICA	80009	342-0163-00
-162	407-2119-00			1	BRACKET,HEAT SK:ALUMINUM (REMOVE FOR OPTION 20) (ATTACHING PARTS)	80009	407-2119-00
-163	211-0538-00			2	SCREW,MACHINE:6-32 X 0.312,FLH,100 DEG,STL (REMOVE FOR OPTION 20) (END ATTACHING PARTS)	93907	ORDER BY DESCR
-164	333-2446-00	B010100	B032450	1	PANEL,REAR:	80009	333-2446-00
	333-2446-01	B032451		1	PANEL,REAR: (REMOVE FOR OPTION 20) (ATTACHING PARTS)	80009	333-2446-01
-165	213-0801-00	B010100	B032499	4	SCREW,TPG,TF:8-32 X 0.312,TAPTITE,PNH,STL	83486	ORDER BY DESCR
	213-0258-00	B032500	B071593	4	SCREW,TPG,TF:8-32 X 0.5,SPCL TYPE,FILH,STL	83385	ORDER BY DESCR
	213-0808-00	B071594		4	SCREW,TPG,TR:8-32 X 0.625 L,TAPTITE,FILH (END ATTACHING PARTS)	83486	239-006-408062
-166	426-1449-03	B010100	B030100	1	FRAME,CABINET:REAR,AL	80009	426-1449-03
	426-1449-06	B030101		1	FRAME,CABINET:REAR	80009	426-1449-06

Fig. & Index No.	Tektronix Part No.	Serial/Assembly No. Effective	Dscont	Qty	12345 Name & Description	Mfr. Code	Mfr. Part No.
1-					(ATTACHING PARTS)		
-167	213-0760-00			4	SCREW,TPG,TF:8-32 X 0.875,SPCL TAPTITE,FILH	72228	ORDER BY DESCR
					(END ATTACHING PARTS)		
-168	407-2122-00			3	BRACKET,CMPNT:ALUMINUM	80009	407-2122-00
-169	407-2121-00			4	BRACKET,CMPNT:ALUMINUM	80009	407-2121-00
-170	407-2161-00			2	BRACKET,CMPNT:LOWER EXTENSION,ALUMINUM	80009	407-2161-00
-171	407-2162-00			2	BRACKET,CMPNT:UPPER EXTENSION,ALUMINUM	80009	407-2162-00
-172	426-1522-00			4	FRAME SECT,CAB.:ALUMINUM	80009	426-1522-00
					(REMOVE FOR OPTION 20)		
	198-3949-00			1	WIRE SET,ELEC:	80009	198-3949-00
-173	131-1815-00			9	.CONTACT,ELEC:FEMALE CONNECTOR	27264	08-56-0110
-174	131-0707-00			4	.CONTACT,ELEC:22-26 AWG,BRS,CU BE GLD PL	22526	47439-000
-175	352-0169-00			1	.HLDR,TERM CONN:2 WIRE,BLACK	80009	352-0169-00
	352-0169-02			1	.HLDR,TERM CONN:2 WIRE,RED	80009	352-0169-02
-176	352-0161-01			1	.HLDR,TERM CONN:3 WIRE,BROWN	80009	352-0161-01
-177	204-0678-00			3	.CONN BODY,PLUG:3 FEMALE CONTACTS	27264	10-17-2032
-178	131-2065-00			3	.TERM,QIK DISC.:18-22 AWG,BRASS TIN PLATED	00779	2-520181-2
-179	131-2084-00			2	.CONTACT,ELEC:26 AWG,COPPER NICKEL	00779	5250-207-2

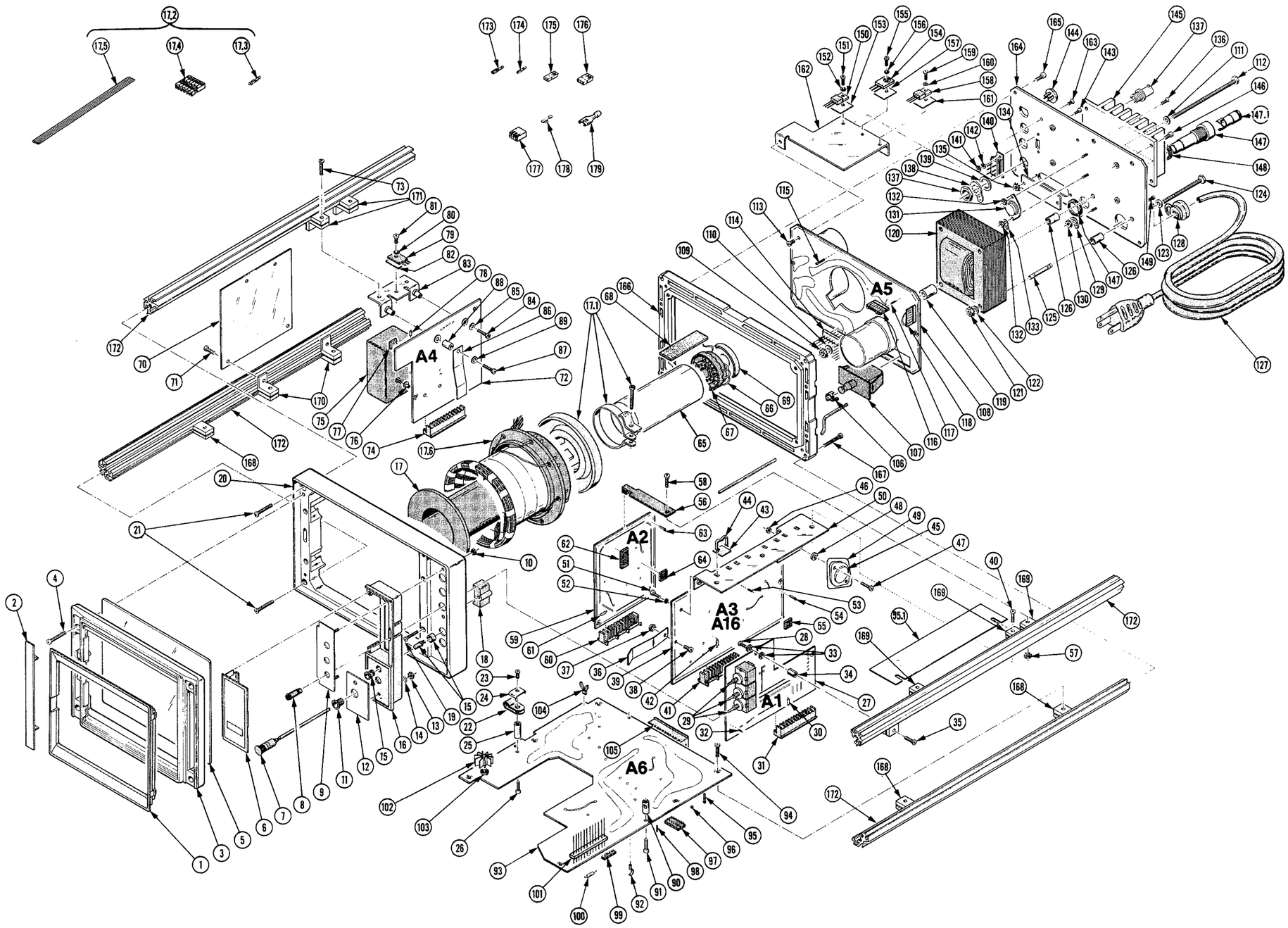

FIG 1 EXPLODED

FIG. 2 & 3 OPTION 1 & 13

OPTION 1

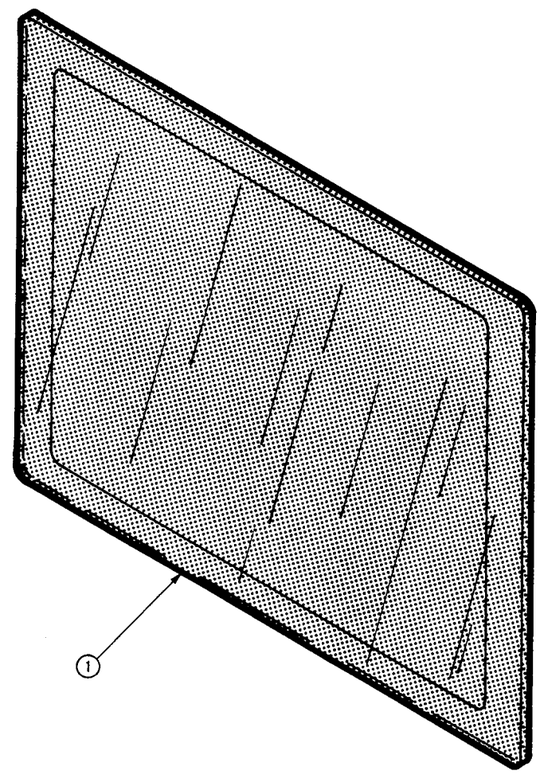

OPTION 13

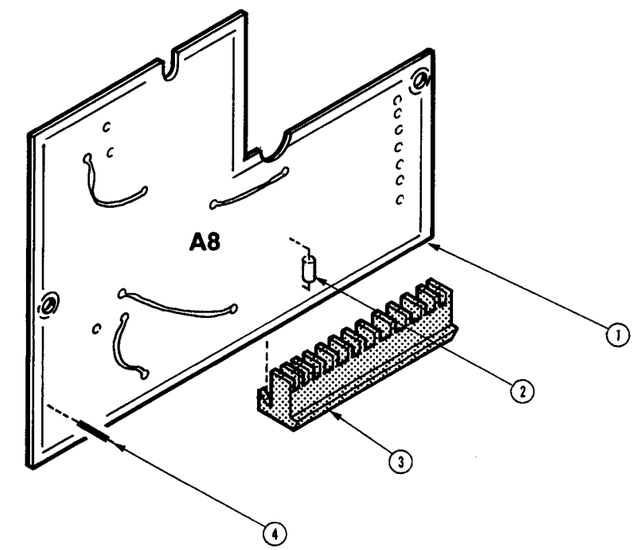

Fig. & Index No.	Tektronix Part No.	Serial/Assembly No. Effective	Dscont	Qty	12345	Name & Description	Mfr. Code	Mfr. Part No.
2-1	337-2537-05			1		SCALE,CRT:5.854 X 4.714 X 0.06	80009	337-2537-05

Fig. & Index No.	Tektronix Part No.	Serial/Assembly No. Effective	Dscont	Qty	12345 Name & Description	Mfr. Code	Mfr. Part No.
3-1	----- -----			1	CKT BOARD ASSY:FRONT PANEL CONTROL (SEE A8 REPL)		
-2	131-0566-00			3	.BUS,CONDUCTOR:DUMMY RES,0.094 OD X 0.225 L	24546	OMA 07
-3	131-1782-00			1	.CONN,RCPT,ELEC:RTANG,12 FEM,0.045 SQ PIN	TK1386	09-52-3121
-4	131-0608-00			2	.TERMINAL,PIN:0.365 L X 0.025 BRZ GLD PL	22526	48283-036

Fig. & Index No.	Tektronix Part No.	Serial/Assembly No. Effective	Dscont	Qty	12345	Name & Description	Mfr. Code	Mfr. Part No.
4-1	131-0955-00	B010100	B071321	1		CONN,RCPT,ELEC:BNC,FEMALE	13511	31-279
-2	342-0117-00	B010100	B071321	2		INSULATOR,BSHG:0.375 ID X 0.625 OD	80009	342-0117-00
-3	210-0255-00	B010100	B071321	1		TERMINAL,LUG:0.391 ID,LOCKING,BRS CD PL	12327	ORDER BY DESCR

Fig. & Index No.	Tektronix Part No.	Serial/Assembly No. Effective	Dscont	Qty	12345 Name & Description	Mfr. Code	Mfr. Part No.
5-1	131-0569-00	B010100	B031599	1	CONN,RCPT,ELEC:25 CONTACT,FEMALE	71468	DB-25S
	131-0569-01	B031600		1	CONN,RCPT,ELEC:25 CONTACT,FEMALE W/WIRES	80009	131-0569-01
					(ATTACHING PARTS)		
-2	211-0038-00			2	SCREW,MACHINE:4-40 X 0.312,FLH,100 DEG,STL	TK0435	ORDER BY DESCR
-3	210-0586-00			2	NUT,PL,ASSEM WA:4-40 X 0.25,STL CD PL	78189	211-041800-00
					(END ATTACHING PARTS)		
-4	131-0570-00			1	CONN,RCPT,ELEC:25 CONTACT,MALE	71468	DB-25P
	198-4103-00	B010100	B031599	1	WIRE SET,ELEC:	80009	198-4103-00
-5	175-0831-00			1	.CABLE,SP,ELEC:8,26 AWG,STRD,PVC INSUL,RBN	08261	111-2699-971

OPTION 11

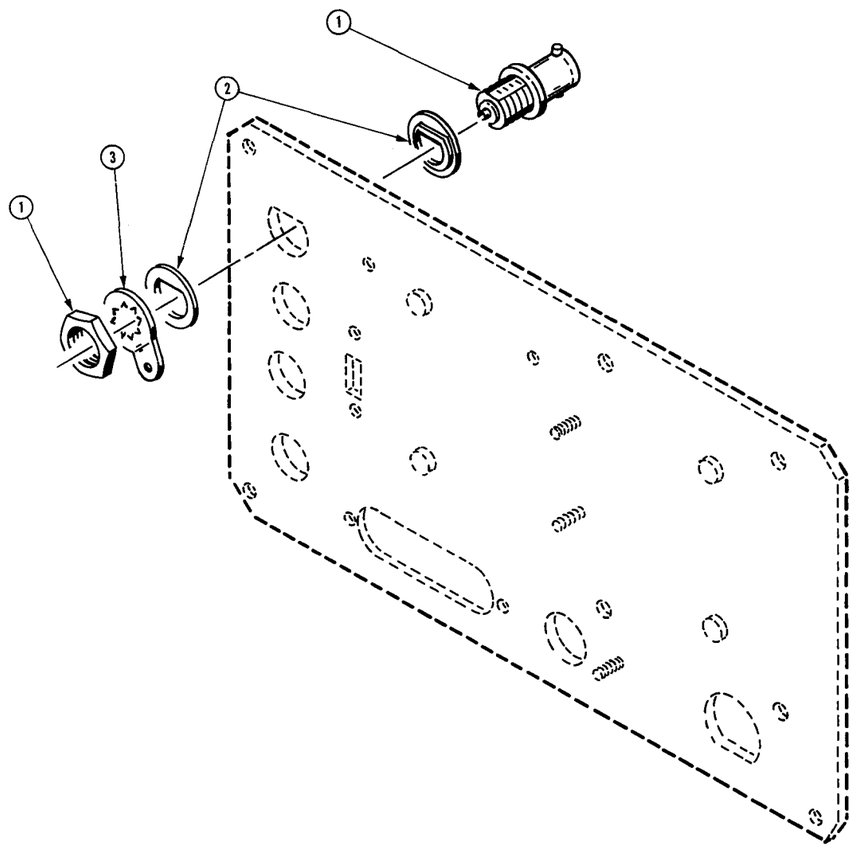

OPTION 16

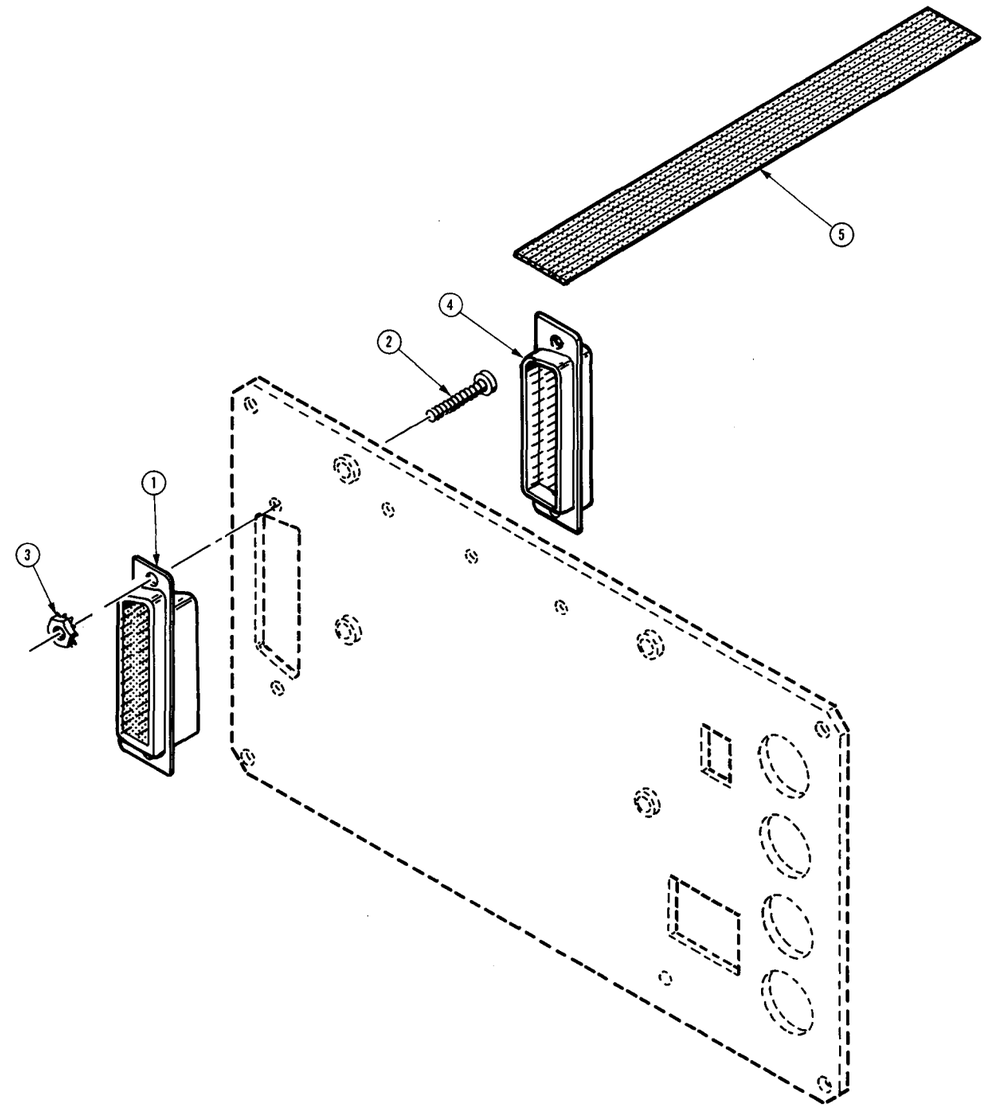

FIG. 4 & 5 OPTION 11 & 16

OPTION 20

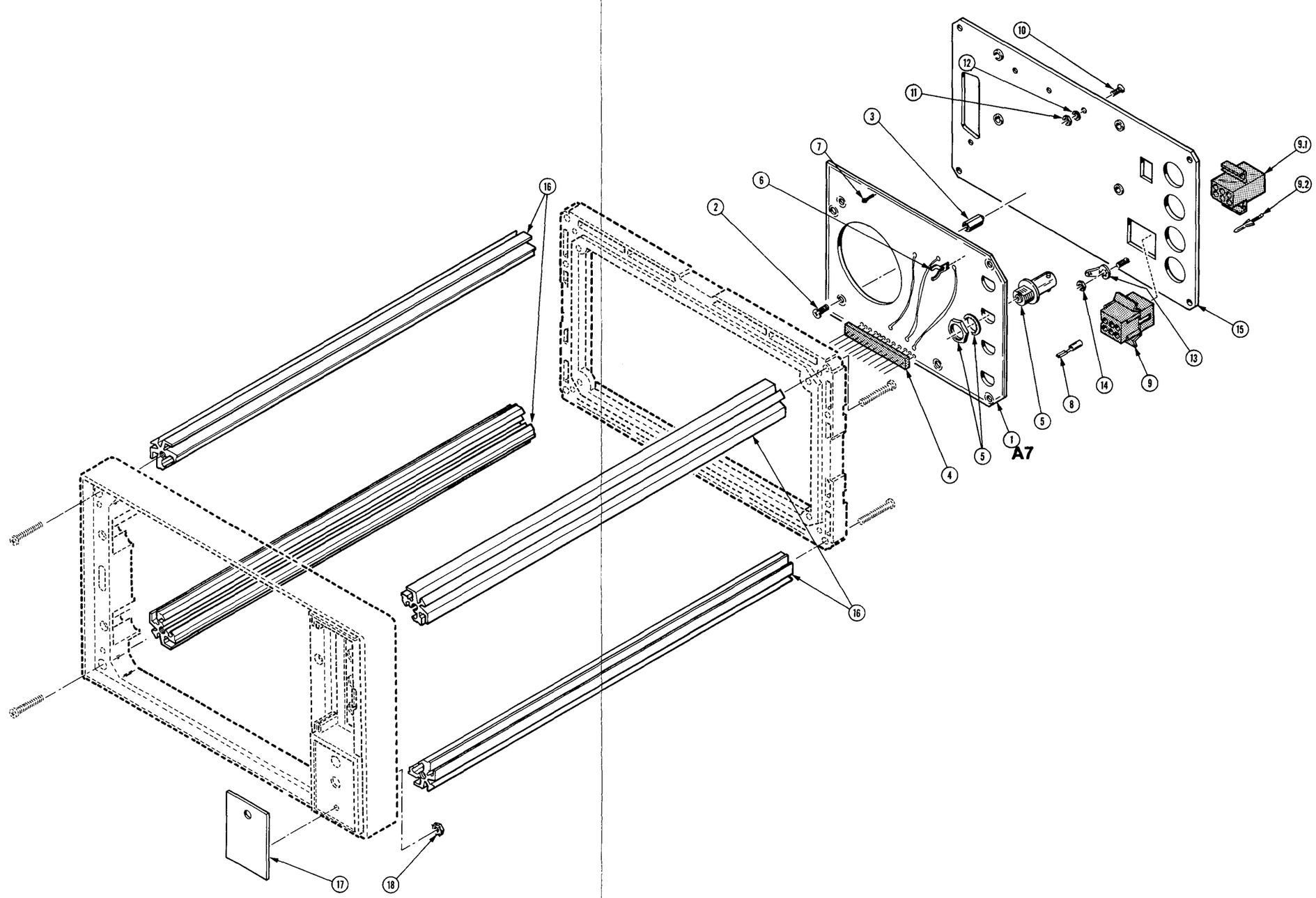

FIG. 6 OPTION 20

Fig. & Index No.	Tektronix Part No.	Serial/Assembly No. Effective	Dscont	Qty	12345 Name & Description	Mfr. Code	Mfr. Part No.
6-					OPTION 20		
-1	----- -----			1	CKT BOARD ASSY:POWER SUPPLY(SEE A7 REPL)		
					(ATTACHING PARTS)		
-2	211-0097-00	B010100	B010179	5	SCREW,MACHINE:4-40 X 0.312,PNH,STL	TK0435	ORDER BY DESCR
	211-0008-00	B010180		5	SCREW,MACHINE:4-40 X 0.25,PNH,STL	93907	ORDER BY DESCR
					(END ATTACHING PARTS)		
-3	129-0363-00			5	SPACER,POST:0.436 L,4-40 ENDS,AL,0.25 HEX	80009	129-0363-00
					CKT BOARD ASSY INCLUDES:		
-4	131-1783-00	B010100	B032450	1	.CONN,RCPT,ELEC:FD-THRU,12 MALE,TIN PLATED S	27264	09-64-1123
					.AFETY CONTROLLED		
	131-1783-01	B032451		1	.CONN,RCPT,ELEC:CKT BD,12 MALE,TIN PLATED	27264	09-64-1127
-5	131-0955-00			4	.CONN,RCPT,ELEC:BNC,FEMALE	13511	31-279
-6	344-0154-00			6	.CLIP,ELECTRICAL:FUSE,CKT BD MT	80009	344-0154-00
-7	214-0579-00			4	.TERM,TEST POINT:BRS CD PL	80009	214-0579-00
	198-3933-00			5	.WIRE SET,ELEC:	80009	198-3933-00
-8	131-0948-00			4	..CONTACT,ELEC:CONNECTOR,BRASS TIN PL	27264	02-09-1101
-9	131-1323-00			1	..CONN BODY,PLUG:ACCOM 6 0.093 OD PINS	27264	03-09-2061
	175-7370-00	B071322		1	CABLE ASSY,RF:75 OHM COAX,11.0 L,9-5	80009	175-7370-00
-9.1	131-1324-00			1	CONN BODY,RCPT:ACCOM 6 0.093 OD PINS	27264	03091061(1261R)
-9.2	131-0945-00			5	CONTACT,ELEC:CONNECTOR,BRASS TIN PL	27264	02092101(1190T)
-10	211-0038-00			3	SCREW,MACHINE:4-40 X 0.312,FLH,100 DEG,STL	TK0435	ORDER BY DESCR
-11	210-0406-00			3	NUT,PLAIN,HEX:4-40 X 0.188,BRS CD PL	73743	12161-50
-12	210-0004-00			3	WASHER,LOCK:#4 INTL,0.015 THK,STL	77900	1204-00-00-0541C
-13	210-0201-00	B010100	B010666	1	TERMINAL,LUG:0.12 ID,LOCKING,BRZ TIN PL	86928	A373-157-2
	210-0202-00	B010669		1	TERMINAL,LUG:0.146 ID,LOCKING,BRZ TIN PL	86928	A-373-158-2
					(SUBPART TO CIRCUIT BOARD)		
					(ATTACHING PARTS)		
-14	210-0406-00			1	NUT,PLAIN,HEX:4-40 X 0.188,BRS CD PL	73743	12161-50
					(END ATTACHING PARTS)		
-15	333-2473-00	B010100	B033174	1	PANEL,REAR:	80009	333-2473-00
	333-2473-01	B033175		1	PANEL,REAR:	80009	333-2473-01
-16	426-1554-00			4	FRAME SECT,CAB.:ALUMINUM	80009	426-1554-00
-17	333-2503-00			1	PANEL,FRONT:LOWER	80009	333-2503-00
					(ATTACHING PARTS)		
-18	210-0406-00			1	NUT,PLAIN,HEX:4-40 X 0.188,BRS CD PL	73743	12161-50
					(END ATTACHING PARTS)		

Fig. & Index No.	Tektronix Part No.	Serial/Assembly No. Effective	Dscont	Qty	12345 Name & Description	Mfr. Code	Mfr. Part No.
7-					OPTION 06,23 & 28		
-1	348-0544-00			4	RTNR,CAB.COVER:CORNER,TEK BLUE,PC (ATTACHING PARTS)	80009	348-0544-00
-2	213-0782-00			4	SCREW,TPG,TF:8-32 X 0.625,FILH,STL (END ATTACHING PARTS)	83486	ORDER BY DESCR
-3	348-0543-00	B010100	B010317	2	FOOT,CABINET:BOT,TEK BLUE,POLYCARBONATE (OPTION 23 ONLY)	80009	348-0543-00
	348-0617-00	B010318		2	FOOT,CABINET:BOT,TEK BLUE,POLYCARBONATE (OPTION 23 ONLY)	80009	348-0617-00
	348-0543-00	B010100	B010137	2	FOOT,CABINET:BOT,TEK BLUE,POLYCARBONATE (OPTION 06 ONLY)	80009	348-0543-00
	348-0617-00	B010138		2	FOOT,CABINET:BOT,TEK BLUE,POLYCARBONATE (OPTION 06 ONLY)	80009	348-0617-00
-4	124-0350-00			2	STRIP,TRIM:CORNER,BOT,BLUE,10.66 L (OPTION 06 AND 23 ONLY)	80009	124-0350-00
-5	124-0351-00			2	STRIP,TRIM:CORNER,TOP,BLUE,14.16 L (OPTION 06 AND 23 ONLY)	80009	124-0351-00
-6	348-0568-01	B010100	B010317	2	FLIP-STAND,CAB.:2.5 H,AL,FINISHED (OPTION 23 ONLY)	80009	348-0568-01
	348-0618-01	B010318	B010708	2	FLIP-STAND,CAB.:2.5 H,AL,FINISHED (OPTION 23 ONLY)	80009	348-0618-01
	348-0568-01	B010100	B010137	2	FLIP-STAND,CAB.:2.5 H,AL,FINISHED (OPTION 06 ONLY)	80009	348-0568-01
	348-0618-01	B010138	B010708	2	FLIP-STAND,CAB.:2.5 H,AL,FINISHED (OPTION 06 ONLY)	80009	348-0618-01
	348-0275-00	B010709		1	FLIP-STAND,CAB.:3.75 H,SST (OPTION 06 AND 23 ONLY)	80009	348-0275-00
-7	348-0543-00	B010100	B010317	2	FOOT,CABINET:BOT,TEK BLUE,POLYCARBONATE (OPTION 23 ONLY)	80009	348-0543-00
	348-0617-00	B010318		2	FOOT,CABINET:BOT,TEK BLUE,POLYCARBONATE (OPTION 23 ONLY)	80009	348-0617-00
	348-0543-00	B010100	B010137	2	FOOT,CABINET:BOT,TEK BLUE,POLYCARBONATE (OPTION 06 ONLY)	80009	348-0543-00
	348-0617-00	B010138		2	FOOT,CABINET:BOT,TEK BLUE,POLYCARBONATE (OPTION 06 ONLY)	80009	348-0617-00
-8	390-0677-00			1	CABINET BOTTOM:MONITOR	80009	390-0677-00
-9	390-0676-00			2	CABINET SIDE:	80009	390-0676-00
-10	200-2191-00			2	CAP,RETAINER:PLASTIC (OPTION 06 AND 23 ONLY)	80009	200-2191-00
-11	367-0247-01			1	HANDLE,CARRYING:11.54 L,W/CLIP (OPTION 06 AND 23 ONLY)	80009	367-0247-01
-12	390-0633-01			1	CABINET TOP:W/HANDLE RETAINER, 14.716 L (OPTION 06 AND 23 ONLY)	80009	390-0633-01
-13	390-0675-00			1	CABINET TOP:0.5 RACK X 14.706 (OPTION 28 ONLY)	80009	390-0675-00
-14	161-0057-01			1	CABLE ASSY,PWR,:3,16 AWG,125V,96.0 L (OPTION 06 ONLY)	80009	161-0057-01
	334-3567-00			1	MARKER,IDENT:MARKED DANGER (OPTION 06 ONLY)	80009	334-3567-00
	131-1703-00			1	CONN,PLUG,ELEC:PWR,MALE,125V,15A W/HOSP GND (OPTION 06 ONLY)	03984	GED 0511H

OPTION 6, 23 & 28

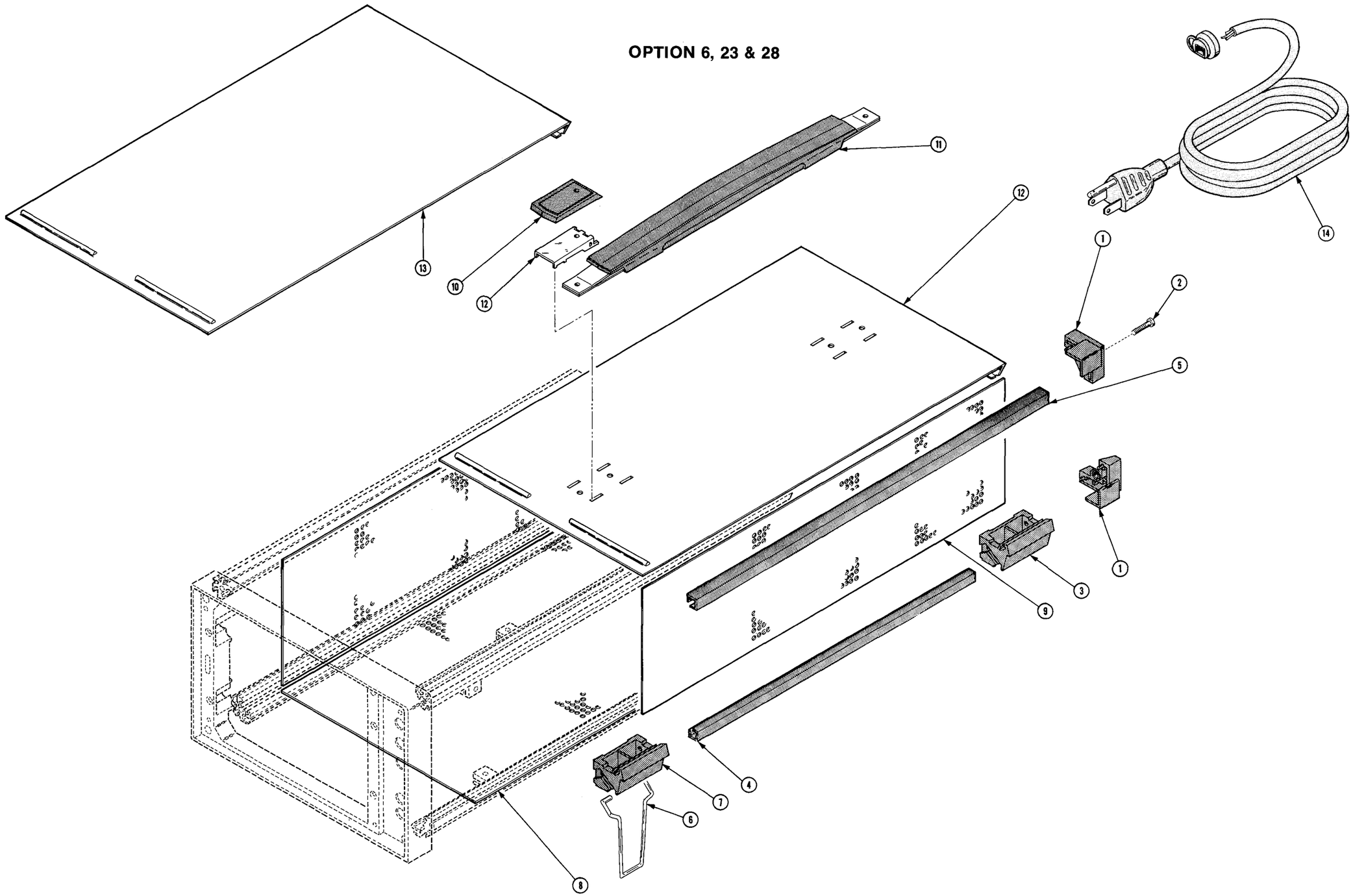

FIG. 7 OPTION 6, 23 & 28

OPTION 14

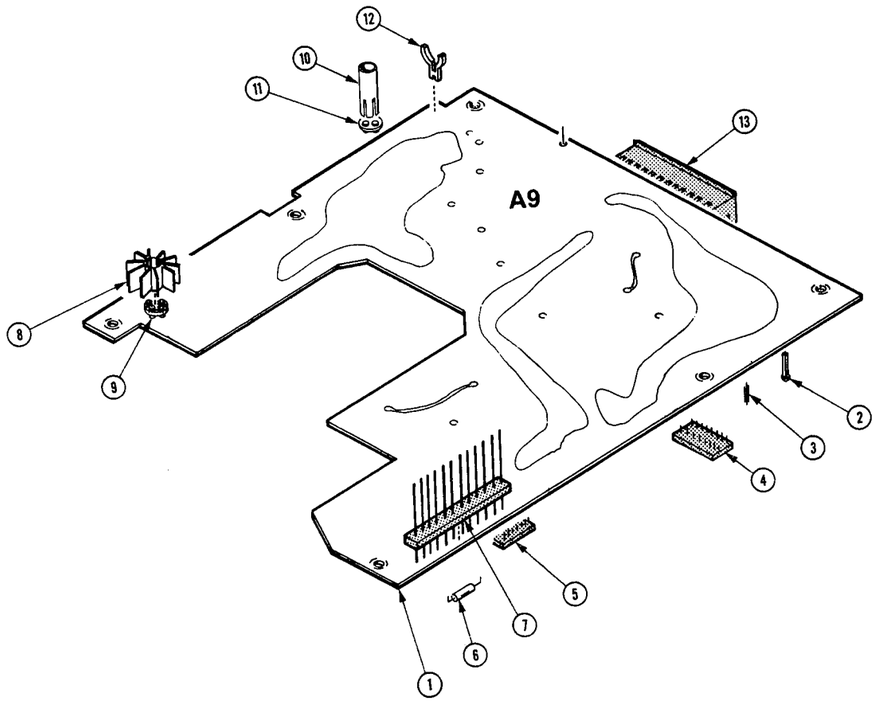

FIG. 8 & 9 OPTION 14 & 15

OPTION 15

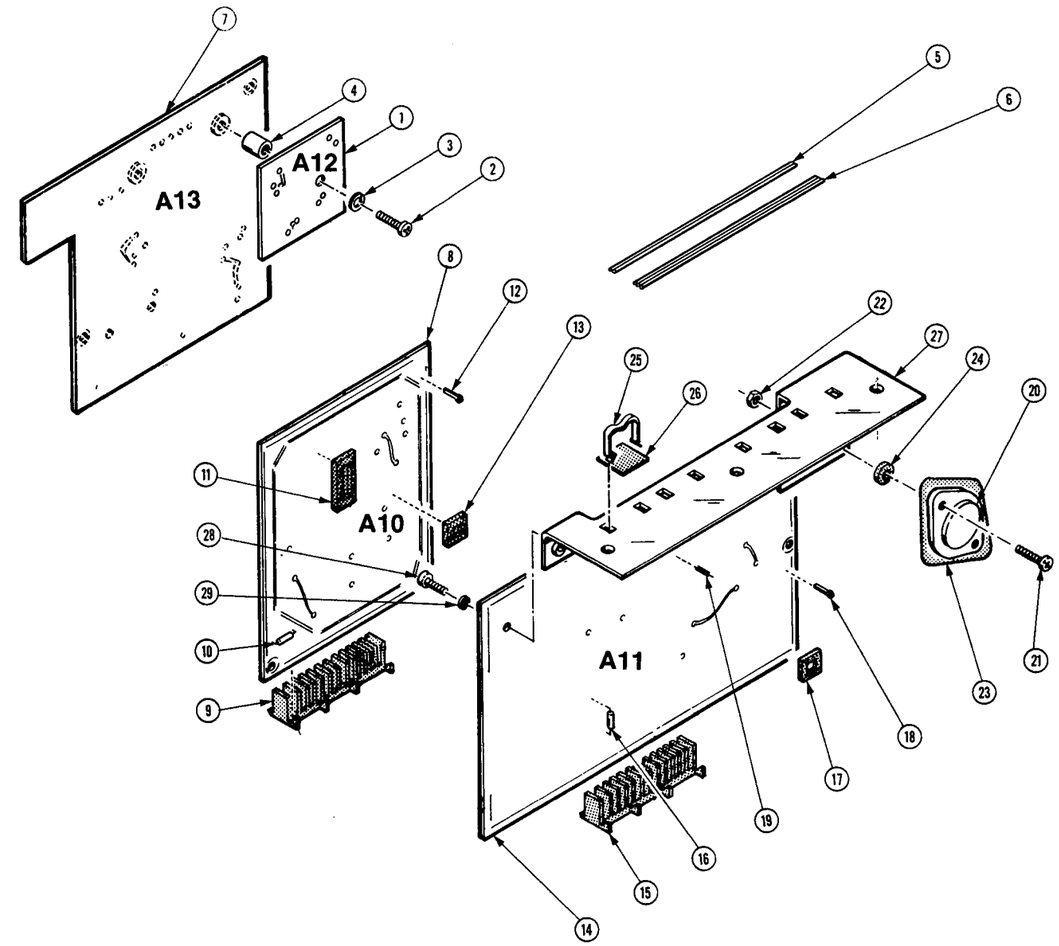

Fig. & Index No.	Tektronix Part No.	Serial/Assembly No. Effective	Dscont	Qty	12345 Name & Description	Mfr. Code	Mfr. Part No.
8-1	----- -----			1	CKT BOARD ASSY:INTERFACE(SEE A9 REPL)		
-2	214-0579-00			5	.TERM,TEST POINT:BRS CD PL	80009	214-0579-00
-3	131-0608-00			6	.TERMINAL,PIN:0.365 L X 0.025 BRZ GLD PL	22526	48283-036
-4	136-0260-02			1	.SKT,PL-IN ELEK:MICROCIRCUIT,16 DIP	09922	DILB16P-108T
-5	136-0269-02			1	.SKT,PL-IN ELEK:MICROCIRCUIT,14 DIP	09922	DILB14P-108T
-6	131-0566-00			4	.BUS,CONDUCTOR:DUMMY RES,0.094 OD X 0.225 L	24546	OMA 07
-7	131-1783-00			4	.CONN,RCPT,ELEC:FD-THRU,12 MALE,TIN PLATED S	27264	09-64-1123
					.AFETY CONTROLLED		
-8	214-1291-00			6	.HEAT SINK,XSTR:TO-5,SIL BRZ PTD BLACK	05820	207SB
-9	342-0324-00			6	.INSULATOR,DISK:TRANSISTOR,NYLON	13103	7717-5N-BLUE
-10	214-0269-00			4	.HEAT SINK,XSTR:0.312 DIA X 0.75 L	98978	TXD-032-75
-11	386-1130-00			6	.INSULATOR,DISK:TRANSISTOR,NYLON	13103	7717-15N
-12	344-0154-00			2	.CLIP,ELECTRICAL:FUSE,CKT BD MT	80009	344-0154-00
-13	131-1782-00			1	.CONN,RCPT,ELEC:RTANG,12 FEM,0.045 SQ PIN	TK1386	09-52-3121
	129-0143-00			1	SPACER,POST:0.406 L,4-40 THRU,NYLON	80009	129-0143-00
	211-0213-00			1	SCREW,MACHINE:4-40 X 0.312,PNH,NYL	23050	ORDER BY DESCR

Fig. & Index No.	Tektronix Part No.	Serial/Assembly No. Effective	Dscont	Qty	12345 Name & Description	Mfr. Code	Mfr. Part No.
9-1	----- -----	B010100	B071999	1	CKT BD ASSY:CURRENT LIMITER(SEE A12 REPL)		
					(ATTACHING PARTS)		
-2	211-0504-00	B010100	B071999	1	SCREW,MACHINE:6-32 X 0.250,PNH,STL	TK0435	ORDER BY DESCR
-3	210-0006-00	B010100	B071999	1	WASHER,LOCK:#6 INTL,0.018 THK,STL	77900	1206-00-00-0541C
					(END ATTACHING PARTS)		
					CKT BOARD ASSY INCLUDES:		
-4	129-0208-00			1	.SPACER,POST:0.312 L,W/6-32 THD 1 END	80009	129-0208-00
	175-2546-00			1	.CA ASSY,SP,ELEC:2,26 AWG,3.0 L	80009	175-2546-00
-5	175-0825-00			1	..CABLE,SP,ELEC:2,26 AWG,STRD,PVC JKT,RBN	80009	175-0825-00
	198-2041-00			1	.WIRE SET,ELEC:	80009	198-2041-00
-6	175-0826-00			1	..CABLE,SP,ELEC:3,26 AWG,STRD,PVC JKT,RBN	80009	175-0826-00
-7	----- -----	B010100	B071999	1	CKT BOARD ASSY:HIGH VOLTAGE(SEE A13 REPL)		
					(SEE FIG.1 PG.10-4 FOR MECH PARTS BREAKDOWN		
-8	----- -----			1	CKT BOARD ASSY:SYNC SEPARATOR(SEE A10 REPL)		
-9	131-1782-00			1	.CONN,RCPT,ELEC:RTANG,12 FEM,0.045 SQ PIN	TK1386	09-52-3121
-10	131-0566-00			2	.BUS,CONDUCTOR:DUMMY RES,0.094 OD X 0.225 L	24546	OMA 07
-11	136-0260-02			3	.SKT,PL-IN ELEK:MICROCIRCUIT,16 DIP	09922	DILB16P-108T
-12	214-0579-00			6	.TERM,TEST POINT:BRS CD PL	80009	214-0579-00
	136-0514-00			1	.SKT,PL-IN ELEK:MICROCIRCUIT,8 DIP	09922	DILB8P-108
-14	----- -----			1	CKT BOARD ASSY:YOKE DRIVER(SEE A11 REPL)		
-15	131-1782-00			1	.CONN,RCPT,ELEC:RTANG,12 FEM,0.045 SQ PIN	TK1386	09-52-3121
-16	131-0566-00	B010100	B047999	3	.BUS,CONDUCTOR:DUMMY RES,0.094 OD X 0.225 L	24546	OMA 07
	131-0566-00	B048000		1	.BUS,CONDUCTOR:DUMMY RES,0.094 OD X 0.225 L	24546	OMA 07
-17	136-0514-00			3	.SKT,PL-IN ELEK:MICROCIRCUIT,8 DIP	09922	DILB8P-108
-18	214-0579-00			6	.TERM,TEST POINT:BRS CD PL	80009	214-0579-00
-19	131-0589-00			5	.TERMINAL,PIN:0.46 L X 0.025 SQ PH BRZ	22526	48283-029
-20	----- -----			1	.TRANSISTOR:(SEE Q390 REPL)		
					.(ATTACHING PARTS)		
-21	211-0578-00			2	.SCREW,MACHINE:6-32 X 0.438,PNH,STL	TK0435	ORDER BY DESCR
-22	210-0407-00			2	.NUT,PLAIN,HEX:6-32 X 0.25,BRS CD PL	73743	3038-402
					.(END ATTACHING PARTS)		
-23	386-0978-00			1	.INSULATOR,PLATE:TRANSISTOR,MICA	16037	#130
-24	361-0020-00			2	.INSULATOR,WSHR:0.156 ID X 0.3 OD X 0.78	80009	361-0020-00
-25	344-0236-00			4	.CLIP,SPR TNSN:XSTR MTG,CU BE BRIGHT DIP	80009	344-0236-00
-26	342-0082-00			5	.INSULATOR,PLATE:TRANSISTOR,ALUMINA	80009	342-0082-00
-27	407-2120-00	B010100	B032450	1	.BRACKET,ANGLE:TRANSISTOR MTG,ALUMINUM	80009	407-2120-00
	407-2120-01	B032451		1	.BRACKET,ANGLE:TRANSISTOR MTG,ALUMINUM	80009	407-2120-01
					.(ATTACHING PARTS)		
-28	211-0507-00			1	.SCREW,MACHINE:6-32 X 0.312,PNH,STL	83385	ORDER BY DESCR
-29	210-0055-00			1	.WASHER,LOCK:#6 SPLIT,0.031 THK,STL	81350	ORDER BY DESCR
					.(END ATTACHING PARTS)		

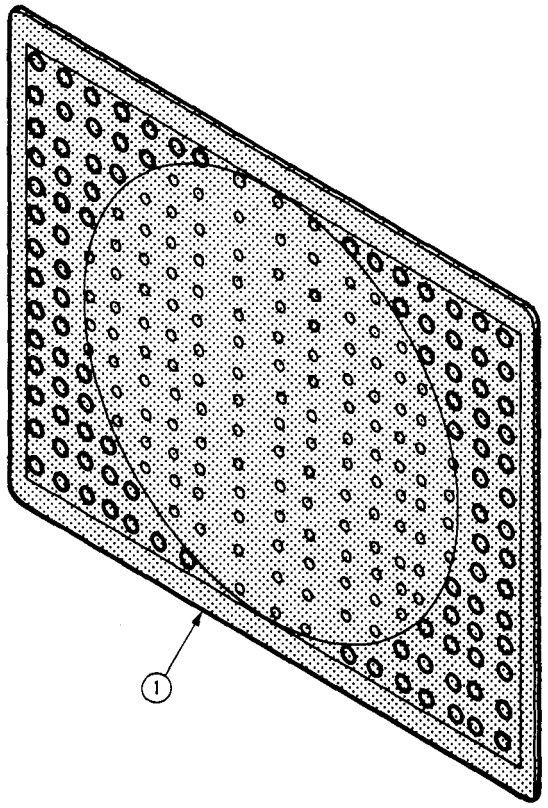

Fig. & Index No.	Tektronix Part No.	Serial/Assembly No. Effective	Dscont	Qty	12345 Name & Description	Mfr. Code	Mfr. Part No.
10-					STANDARD ACCESSORIES		
-1	337-2537-01			1	SCALE,CRT:5.854 X 4.714 X 0.09,CLEAR FOR CA LIBRATION	80009	337-2537-01
	070-2561-00			1	MANUAL,TECH:INSTRUCTION	80009	070-2561-00
	070-2560-00			1	MANUAL,TECH:OPERATORS	80009	070-2560-00
	378-0133-00			1	FILTER,LT,CRT:GRAY	80009	378-0133-00
	337-2537-05			1	SCALE,CRT:5.854 X 4.714 X 0.06 (OPTION 01 ONLY)	80009	337-2537-05
					OPTIONAL ACCESSORIES		
	067-0879-00			1	FIXTURE,CAL:EXTENDER BOARD	80009	067-0879-00