Tektronix
COMMITTED TO EXCELLENCE

COMBINATION EDITION

Wizards Workshop

****
* ALL SERVICE QUESTIONS FROM EUROPE, MIDDLE EAST, *
* AND AFRICA SHOULD BE ADDRESSED TO THE EUROPEAN *
* MARKETING CENTER SERVICE GROUP IN THE NETHERLANDS. *
****

TEKTRONIX INTERNAL USE ONLY

Published by Service Admin Support — July 17, 1981
56-037 — Ext. 8939 Merlo — Issue 11-13

TABLE OF CONTENTS

GENERAL

ADMINISTRATIVE SUPPORT

LABORATORY INSTRUMENT DIVISION

TM 500

5000 SERIES

COMMUNICATIONS DIVISION

MEDICAL

TABLE OF CONTENTS (CONTINUED)

SPECTRUM ANALYZERS

TELEVISION PRODUCTS

SERVICE INSTRUMENT DIVISION

ACCESSORIES

LOGIC ANALYZERS

PORTABLES

INFORMATION DISPLAY DIVISION

LABORATORY INSTRUMENT DIVISION

BASIC TRANSISTOR TROUBLESHOOTING REVISITED - ARTICLE #3

(Third article in a series of five.)

BASIC CIRCUIT ANALYSIS

An interesting problem is illustrated in Figure 4. In this circuit, both transistors are of the NPN type. Note that Q_2 has 0.8 V reverse bias on its emitter-base junction, but the 2.0 volts on the emitter means that there is 2 mA of emitter current. Now, since the emitter-base junction is not shorted, this 2 mA of current also flows through the 8K resistor in the collector of Q_2. Therefore, the collector voltage, V_{CC}, is:

$$18V - (8K) \times (2\ mA) = 2\ V$$

Thus, it would appear that Q_2 has a short between collector and emitter.

Another interesting problem in troubleshooting is illustrated in Figure 5. Although the emitter current of Q_1 is 1 mA, the collector current is only 0.52 mA (i.e., 5.2V ÷ 10K). Stage Q_2 shows 5 mA flowing in both the emitter and collector circuits, so Q_2 is either shorted or saturated. The one voltage that should answer this question is not given; i.e., the voltage on the base of Q_2. If everything were working correctly, this voltage would be approximately 1.5V.

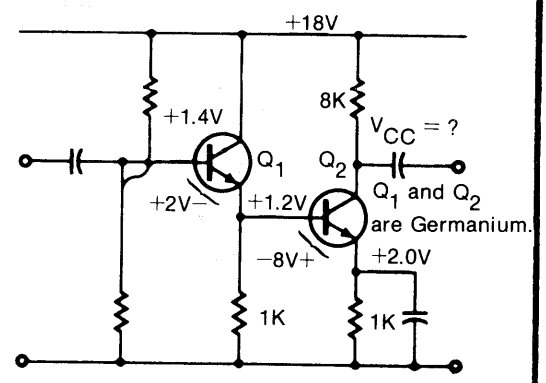

Figure 4. Direct coupled two-stage example circuit.

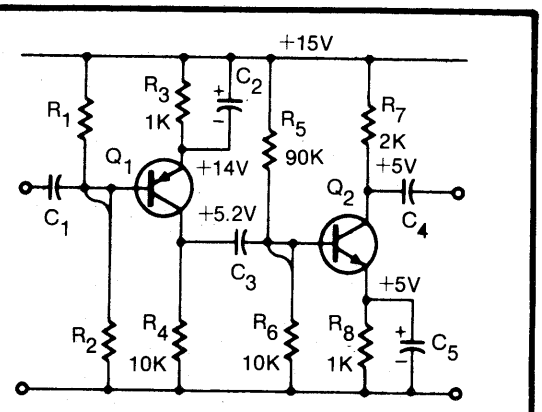

Figure 5. Capacitive coupled two-stage example circuit.

$$V_B = \frac{(V_C) \times (R_6)}{R_5 + R_6}$$

$$V_B = \frac{(15V) \times (10K)}{90K + 10K}$$

$$V_B = 1.5V$$

What appears to have happened is that C_3 is shorted. This would explain why there is only 0.52 mA flowing through resistor R_4. The other 0.48 mA is flowing through C_3 and resistor R_6. If C_3 were shorted, it would also explain the voltages on Q_2. The 5.2 V on the base produces 5.0 volts on the emitter, which, in turn, causes the 5 mA of dc current to flow and Q_2 to saturate.

If capacitor C_3 were replaced, the base voltage of Q_2 would be 1.5 V dc, and the voltage on the emitter would be about 1.3 V dc. This, in turn would cause about 1.3 mA of dc to flow. The resultant collector voltage would be 12.4 V dc.

Reprinted from Bench Briefs

Submitted by--
Dick Hornicak

July 17, 1981
Issue 11-13

IC RELIABILITY

The Integrated Circuits Manufacturing Quality and Reliability Department has detected an integrated circuit assembly problem that is potentially a reliability problem. The problem could be aggravated by temperature change and cause intermittent circuit malfunction. The part numbers that may be affected and the products they're used in are:

155-0049-02	155-0050-01	155-0154-00	155-0196-00
SC502	314	GMA101A	468 w/o Opt. 05
335	432	GMA102A	2335/6/7
400 Series Portables	434	GMA125	
5B Series Plug-ins		4006-1	
7B Series Plug-ins		4016-1	
		4052	
		4054	
		618	
		672-0546-05	
		672-0546-06	

Date Codes 105 through 111 inclusive, without a letter "T" following the Part Number or Date Code.

Additional reliability screens have been completed on all finished goods warehouse stock and work-in-process. Each part that passed the additional screens has been stamped with the letter "T" (see the following diagrams).

During a service call or when an instrument is at a Tektronix facility for calibration or repair, replace the part if it is date code 105-111 without a "T". The parts must be replaced with parts that have the letter "T" or with date codes other than 105 through 111 inclusive. Replace the part using failure code "155". Charge the replacement part to Warranty (Activity Code 02) or, Customer Accomodate (Activity Code 03) to Responsibility Number 2328-10. In either case, return the parts to Beaverton using the standard procedure for warranty parts.

(CONTINUED ON NEXT PAGE)

IC RELIABILITY (CONTINUED)

DIAGRAMS OF TYPICAL IC STAMPINGS:

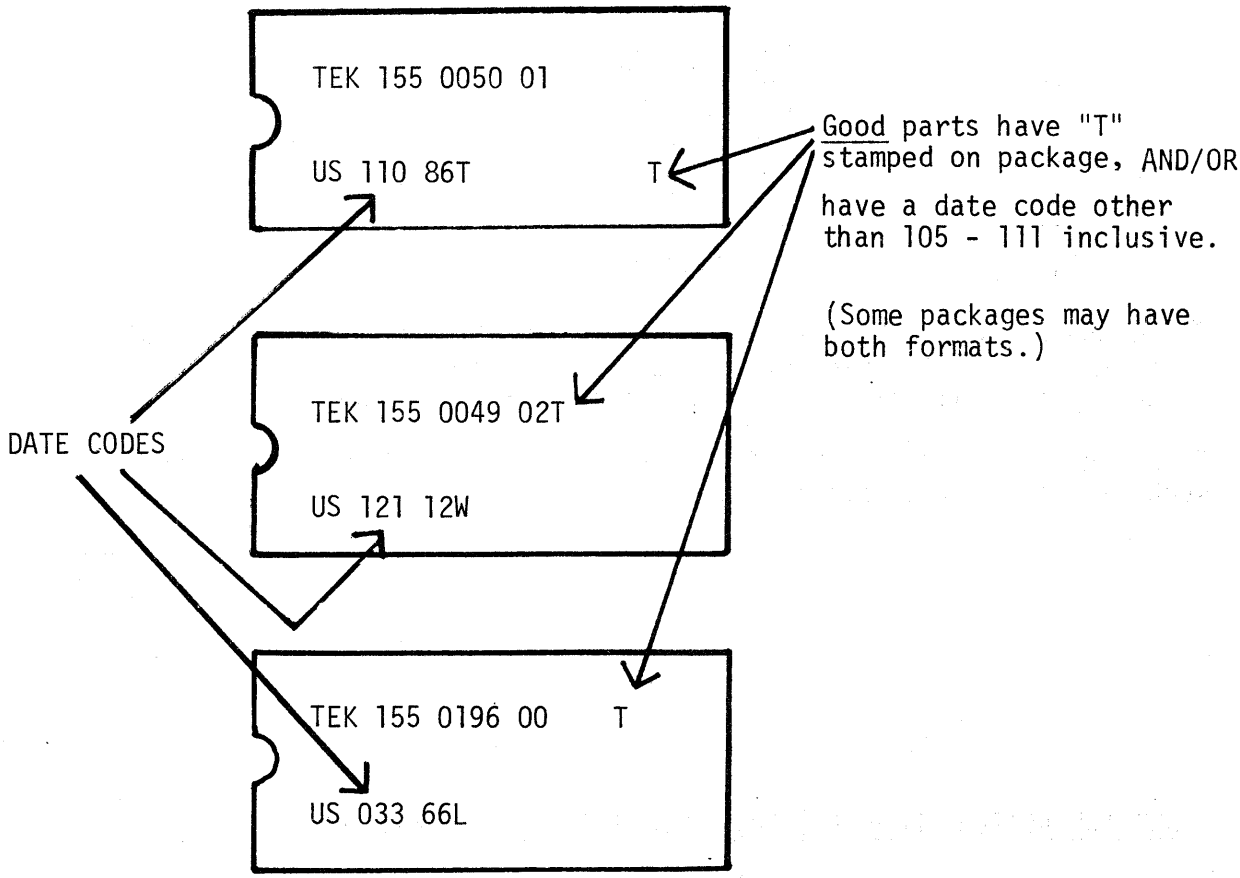

Ken Davenport
ICM Reliability

Inserted by:
Todd Paulus
53/108, Ext. 8685

SHOP JACKETS NOW AVAILABLE

White polyester shop jackets are now available for use by Tektronix field service personnel. These attractive jackets resist spills or stains and can be used to protect clothing while servicing Tektronix products. The jackets' sizes and part numbers are given below.

Size	Part Number
32	006-1203-00
34	006-1204-00
36	006-1205-00
38	006-1206-00
40	006-1207-00
42	006-1208-00
44	006-1209-00
46	006-1210-00
48	006-2447-00

Since these jackets tend to generate static electricity, care must be exercised when servicing static sensitive components. Treatment of the jackets with a non-clinging or anti-static agent is advisable.

Thanks go to Val Prichodko of the Chicago Field Office for suggesting such jackets be made available.

--George Kusiowski
63/503, Ext. 3928 (WI)

SERVICE ACTION REQUEST (SAR) FORM ORDERING INSTRUCTIONS

Service Action Request (SAR) forms, part number 000-5999-00, are printed 25 to a pad. When ordering SARs, please order by the pad. For example, if you wish to order 100 SAR forms, you should request four each 000-5999-00.

--Debbie Zukerman
92-236, Ext. 1291

ADMINISTRATIVE SUPPORT

INFORMATION SYSTEMS

The importance of complete, accurate data reporting cannot be over emphasized.

The warranty period failure information and associated defective components are important facets of this data.

Component failure patterns are determined through analysis of Service Record data by Reliability Engineers. This analysis requires accurate, timely data to be successful.

Component failure analysis is not done entirely on paper; however, and thus the second part of warranty failure reporting comes into play. The defective component, forwarded to Reliability Engineering within a week after instrument repair, is carefully analyzed. Some of the information determined is: Who made the component and when? Was there a structural defect? Was defective or contaminated material used in making the component? None of this information can be learned without the component.

It is important that the returned component be linked to the appropriate product failure data. This can only be done if the Warranty Failure Component copy mailed with the component is legible. At a minimum, the resp-cc, job number, product type, and serial number must be readable. With this data, the matching failure data can be found in the Service Record Data Base.

Please ensure all Service Records are typed whenever possible. When they must be completed by hand, please use a hard-tip (ball point) pen, please write on a hard surface, please press hard and please check the entries for accuracy and legibility.

--Bill Duerden
56-037, Ext. 8938 MR

CG 551AP RESPONSE TO "DSP ON/OFF" COMMAND

Reference: CG 551 AP Manual, P/N 070-2690-00, Pg. 3-8, Table 3-1.

When in EDGE or FAST EDGE mode, the CG 551AP will not respond to the single command, "DSP ON/OFF". To use this command it is necessary to send it with another command. For example:

DSP ON;VAR DSP OFF;VAR	turns the display on and off with no other effect,
DSP ON;INC.	turns the display on and increments by 0.1,
DSP OFF: DEC	turns the display off and decrements by 0.1.

--Stan Uffner
92-236, Ext. 1564

CG 551AP RESPONSE TO % VARIABLE QUERIES

Reference: General

When queried for the percent error, the maximum response of the CG551AP is 9.9%. Any value higher than this will also return 9.9%.

--Stan Uffner
92-236, Ext. 1564

SG 503 - REPAIRING INTERMITTENT S240

Reference: SG 503 Manual, P/N 070-1622-01, A3 Attenuator - Output Buffer Board

To repair S240 without replacing the entire assembly, this procedure may be used:

Remove the slide guide portion of the intermittent S240 by cutting the anchor posts on the component side of A3 with a diagonal cutter, then push the remaining plastic through the mounting hole.

Making sure that the contact arms are aligned with their corresponding pads (if they're not, the switch will be intermittent), mount the new guide (P/N 351-0355-00) by pushing the anchor posts through the mounting holes. While applying firm, steady pressure, heat the protruding portions of the posts on the back of A3 with a soldering iron until the melted plastic laps over the board enough to hold the guide securely.

--Stan Uffner
92-236, Ext. 1564

5223, POSSIBLE VERTICAL AND HORIZONTAL OSCILLATIONS

Reference: 5223 Service Manual P/N 070-2932-00
5223 Option 10 Service Manual P/N 070-3715-00

③ Horizontal Amplifier

④ Vertical Amplifier

Corporate Mods 41674 and 42550

Two modifications have been made to prevent oscillations, one each to the horizontal and vertical amplifiers. Both amplifiers can, expecially when cold, exhibit a low level oscillation of about 180 MHz. To cure this, the same change is being done on both output I.C.'s, U200 and U230. First remove the XYZ, A3, circuit board from the instrument. On the back of the board, cut the runs going to pins 7 and 19 of U's 200 and 230. On the back of the board run a jumper, using insulated wire between pins 7 and 19, then to pin 1 on U200, as shown on the following drawings. Perform the same strapping to U230.

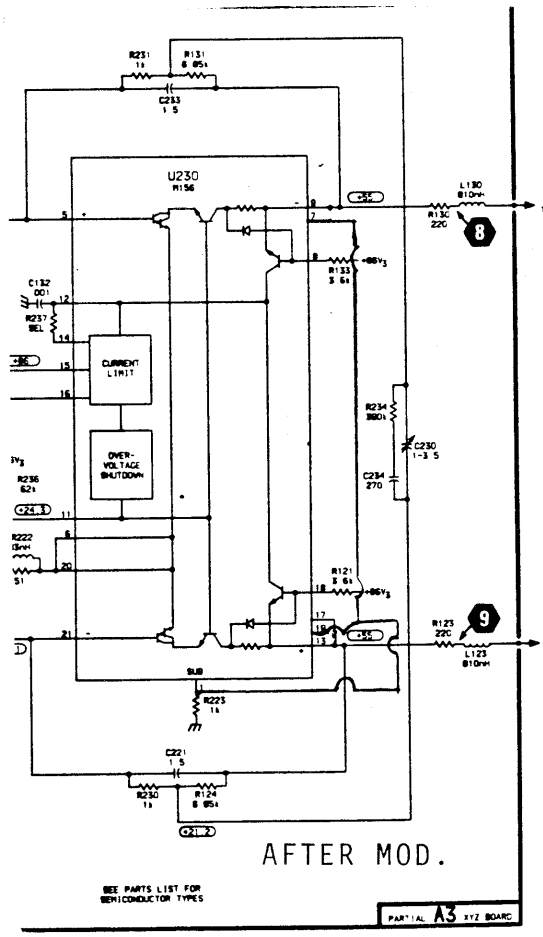

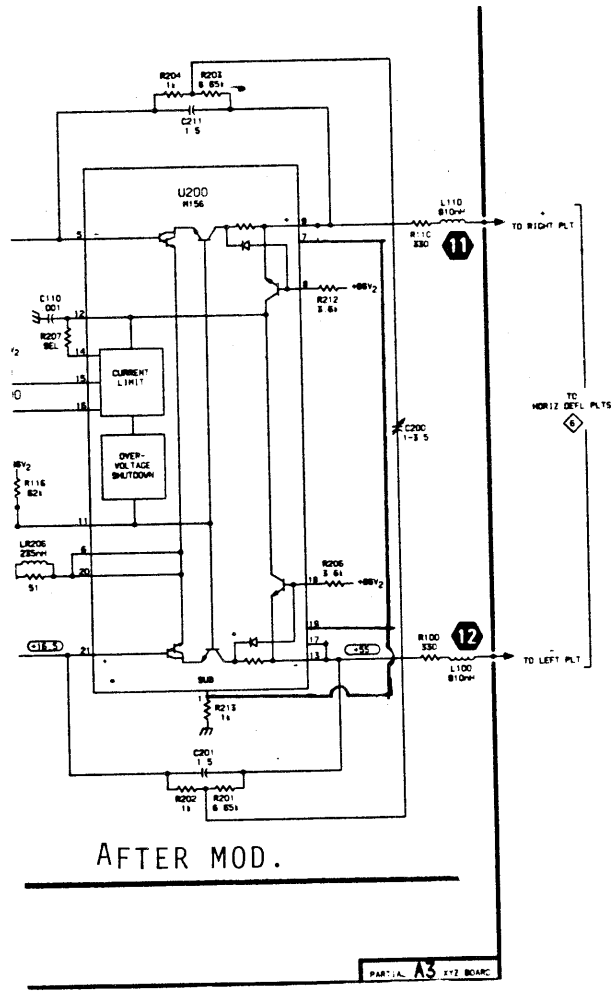

(CONTINUED ON NEXT PAGE)

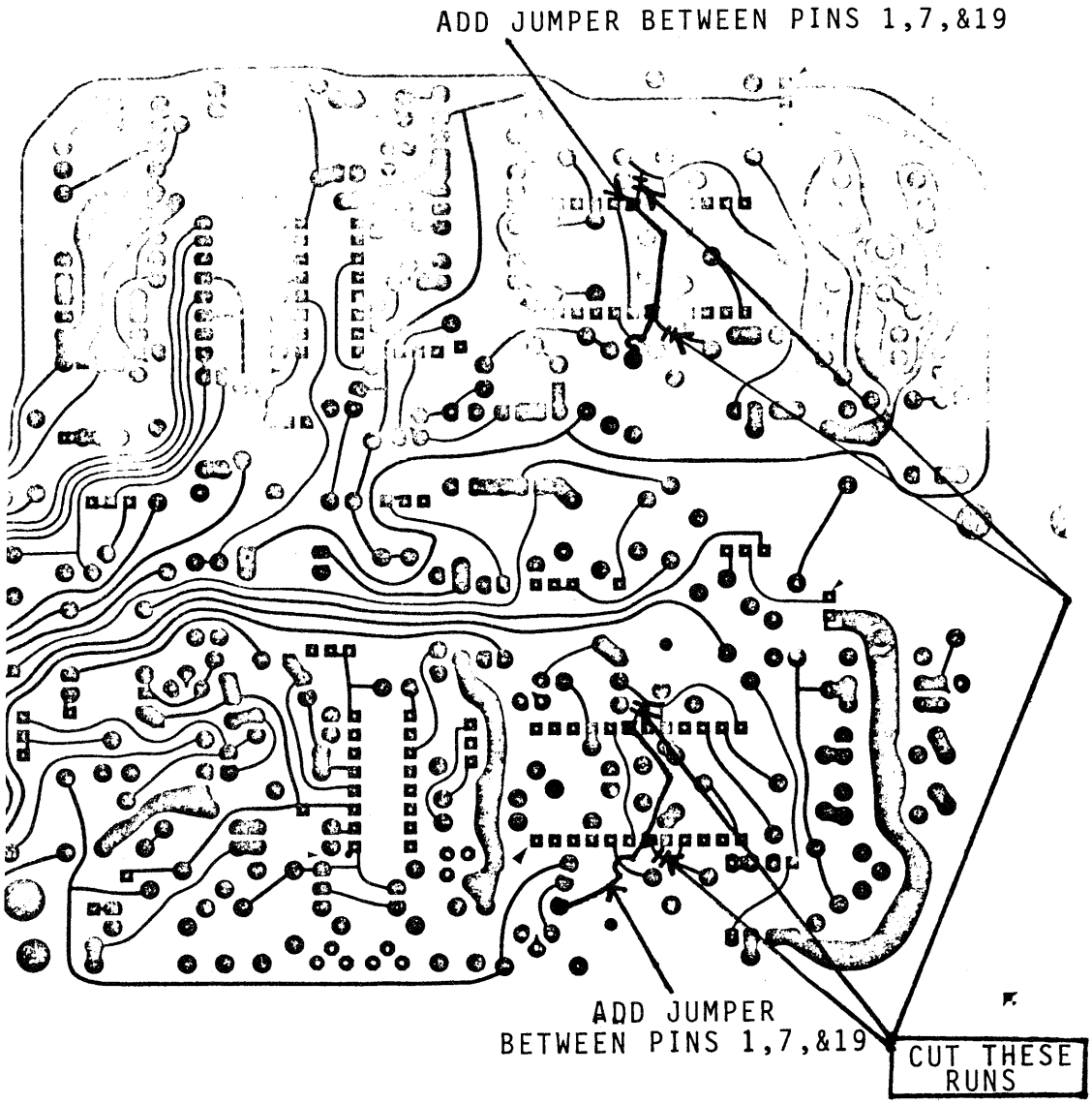

AFTER MOD.

BOTTOM VIEW OF XYZ CIRCUIT BOARD

--John Eaton
58/511, Ext. 5222

400/401 INSTALLATION KITS FOR MEDICAL INSTRUMENTS

Instruments affected: 400, 401, 408, 412, 413, 414

Modification M39247 provided for a new version of the main board in the 408, 412 and 414 monitors. Part of the change was the incorporation of the "manifold board" that was previously used to provide pin connectors for cables to and from recorders and/or digital readout modules.

In the future, 400 recorders and 401 digital readout modules will not be shipped with the old installation kits containing manifold boards and other parts. When a 400 or 401 is ordered for installation on an older monitor, please refer to the following table to determine the proper part number for the installation kit.

1. Installing a 400 Recorder in:

Instrument	Serial Number	Installation Kit Part Number
408	Below B203685	016-0498-00
412	All	016-0498-00
414 all options	Below C118053	016-0498-00

2. Installing a 401 Digital Readout Module in:

Instrument	Serial Number	Installation Kit Part Number
413	All	016-0391-00

3. Installing a 401 Opt. 1 or 401 Opt. 2 in:

Instrument	Serial Number	Installation Part Number
414 all options	Below C118053	016-0394-00

If you have any questions, please contact me (800-547-8805 Ext. 209).

Submitted by
Steve Schmelzer
(Vitatek)

Inserted by
Todd Paulus
53/108, Ext. 8685

408/412 LEAD FAULT MALFUNCTION

Reference: 408 (P/N 070-1525-00) & 414 (P/N 070-2042-01) Manuals

The lead fault lamp may not light on some monitors when patient leads become disconnected because the fault detection current is insufficient to compensate for leakage paths. Also, a vendor process change is producing increasingly sensitive opto-isolators (CR324) which cause the QRS detector AGC loop to overshoot during initialization. The following changes should be made to all monitors listed below as they come in for service.

REMOVE

CKT Number	Part Number	Description
R104, R112	314-0011-00	Resistor, 10KM ohm ¼ w. 5%
R322	315-0514-00	Resistor 510K ohm ¼ w. 5%
R326	315-0102-00	Resistor 1K ohm ¼ w. 5%

ADD

CKT Number	Part Number	Description
R104, R112	302-0108-00	Resistor, 1KM ohm ¼w. 5%
R322	315-0104-00	Resistor 100K ohm ¼w. 5%
R326	315-0201-00	Resistor 200 ohm ¼w. 5%

Instruments affected	Serial Number
408	B203775
412	
414 Standard	B097466
414 Opt 2	B097538
414 Opt 21	B097484

(CONTINUED ON NEXT PAGE)

Change R102, R104
to 302-0108-00

Change R322 to 315-0104-00
Change R326 to 315-0201-00

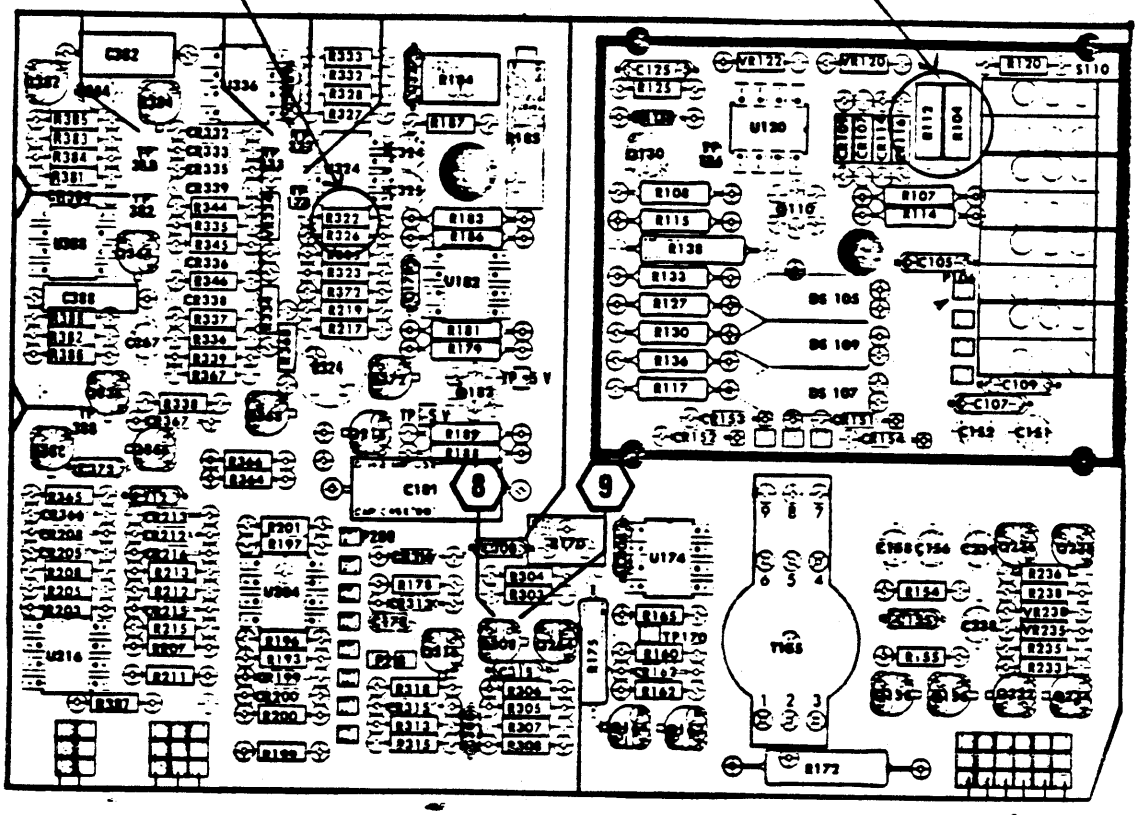

ECG Board 670-2702-06

(CONTINUED ON NEXT PAGE)

Change R104, R112
to 1KM ohm P/N 302-0108-00

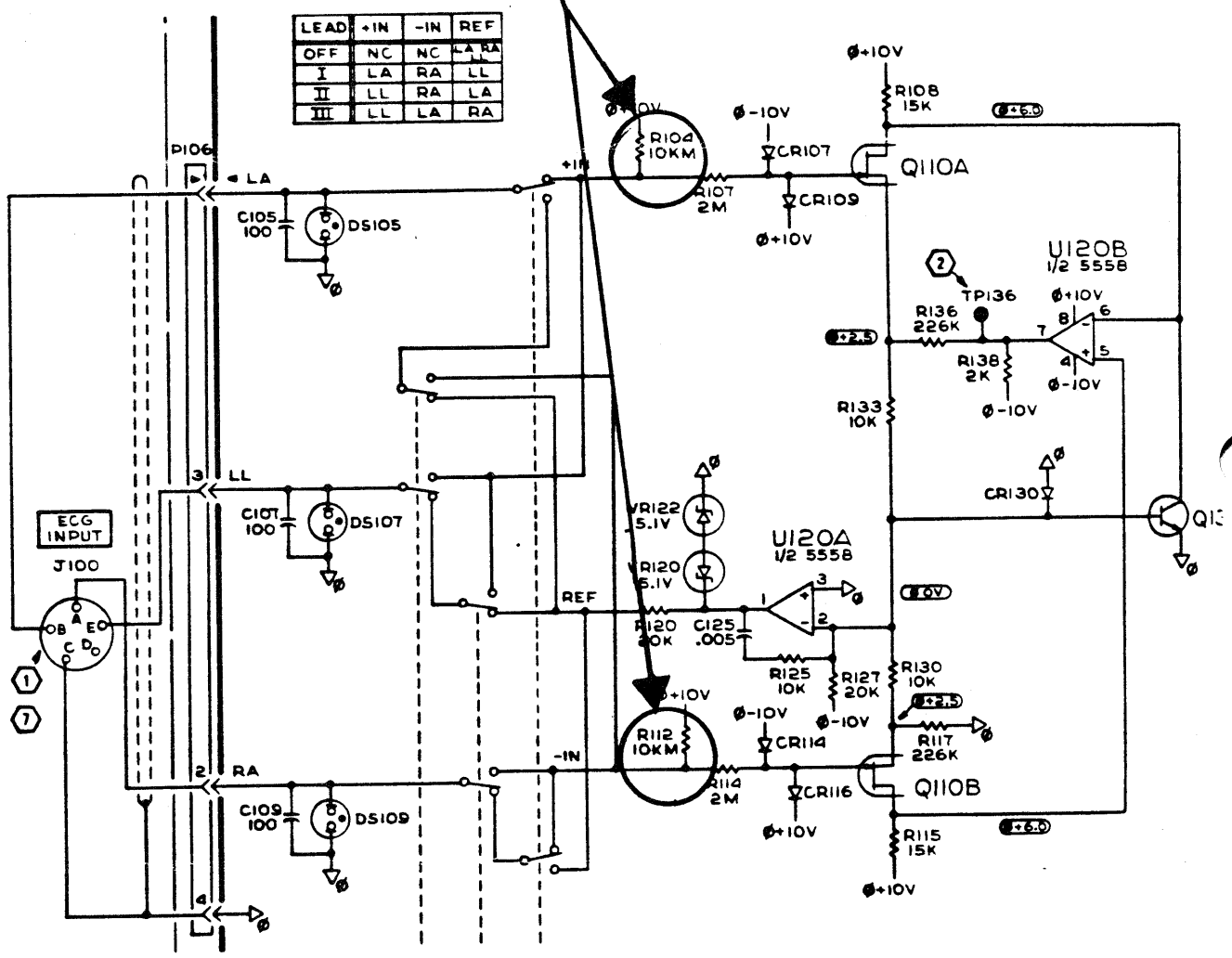

(CONTINUED ON NEXT PAGE)

Change:

R322 to 100K ohm P/N 315-0104-00

R326 to 200 ohm P/N 315-0201-00

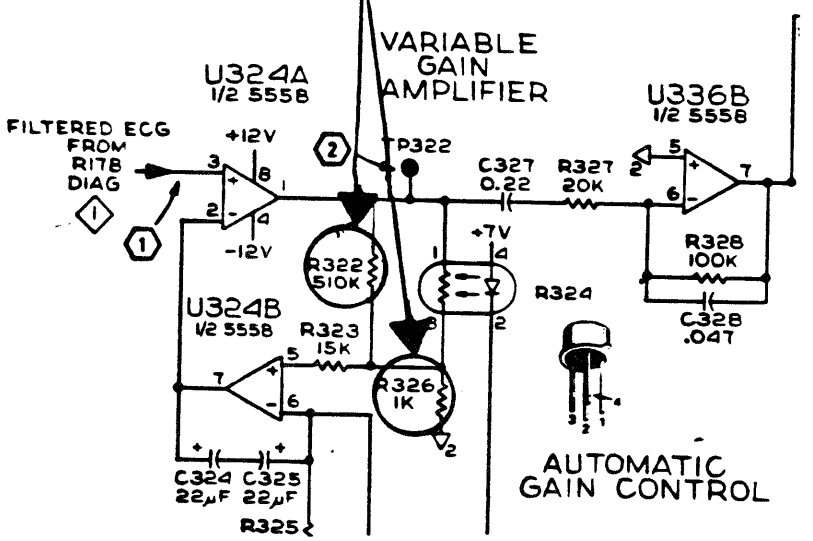

Submitted by
Steve Schmelzer
(Vitatek)

Inserted by
Todd Paulus
53/108, Ext. 8685

413A--CHANGE IN MOUNTING HARDWARE FOR Q4158 & Q4159

A change in the packaging style of the 151-0477-00 transistor necessitates changes in the hardware used to mount the transistor to the chassis.

The following parts are required to mount the new 151-0477-00 to the chassis in a 413A:

PART NUMBER	DESCRIPTION	QUANTITY
211-0012-00	Pan head screw 4-40 x .375"	1
210-1178-00	Shoulder washer	1
342-0311-00	Insulator, Mica	1

Please be aware of these requirements when replacing Q4158 and Q4159 and make sure you have the correct mounting hardware on hand.

Thanks to Linda Durdel for this information.

Submitted By--
Steve Schmelzer
Vitatek, Inc.
(800-547-8805 Ext. 209)

Inserted By--
Todd Paulus
53/108, Ext. 8685

413A/REPLACEMENT OF RATE LIMIT POTS

Instruments Affected: 413A - All Serial Numbers
Reference: 413A Manual (P/N 070-2894-00)
Schematic 5 and backside of Schematic 4

R3745, R3749, R3753 and R3757 require a fixture to mount them to the board. Their mounting surfaces must be in the same plane and they must be orthogonal to the front panel. Failure to do this stresses the solder leads and internal parts when the mounting nut is tightened. The fixture is being used by the vendor where the boards are initially built. However, when a defective pot is replaced in the plant or the field, the fixture is not available. The same results can be obtained as follows:

1. Remove A34 Rate Alarm control board. Remove defective potentiometer. Clean solder from holes.
2. Mount board assembly and replacement potentiometer in a blank front panel or upside down in a 413A. Mounting A34 upside down exposes backside of board for easy soldering. Tighten all mounting nuts on front panel.
3. Solder potentiometer leads to board.
4. Remove A34 board and install right side up.

Following this procedure will prevent damaging good pots.

Thanks to Jim Brooks of Engineering for this information.

Submitted by
Steve Schmelzer
(Vitatek)

Inserted by
Todd Paulus
53/108, Ext. 8685

492P CIRCUIT BOARD MOUNTING HARDWARE MISSING

Reference: 492/492P Instruction Manual Volume 2, P/N 070-2852-02

It was recently discovered that Manufacturing has been inadvertently shipping instruments with circuit board mounting hardware missing. The board in question is the GPIB Extender Board assembly (A56A1) which is mounted to the right hand side frame assembly. This mounting is clearly shown in the Mechanical Parts Section, Figure 10.

There should be THREE mounting screws and nuts holding the GPIB Extender Board (A56A1) to the side frame, but only one (Figure 10, Item 13) had been installed in Manufacturing. This allows the GPIB Extender Board to move around and very possibly cause intermittent connections between this board and the GPIB board (A56) which plugs into it. The hardware which is missing is two screws (Figure 10, Item 12), P/N 211-0097-00, and two nuts (Figure 10, Item 11), P/N 210-0586-00. This hardware should be mounted as shown in Figure 10, through the connector (Figure 10, Item 15) and side rail.

All 492P's BELOW S/N B031600 should be checked as they come in for service and missing hardware must be installed to prevent intermittent failures.

--Rich Andursco
53/108, Ext. 8694

TV APP NOTE #22, 140 SERIES BLANKING INTERVALS

Some minor discrepancies exist in TV App Note #22 that can make it difficult to install properly. The App Note addresses shortening the blanking intervals on the 140-144-146 NTSC generators.

First--insure you have the latest version of the note, designated by a number in the lower right corner on the back of the note. In this case, you should have, or obtain, AX-3265-1.

A few changes to the circuit diagrams are in order.

A. H-Blanking--use only a 74LS221, a 74221 won't function correctly.

B. The top IC (½ of 74LS221) has one pin that is not labeled between pins 14 and 1. It should be labeled pin 2.

C. V-Blanking--the base of the bottom 2N3692 transistor should go through a 1K resistor to U302 pin 5 instead of pin 2.

D. Figure 5 should be marked U302-5 in accordance with C.

See the following illustrations for the noted changes.

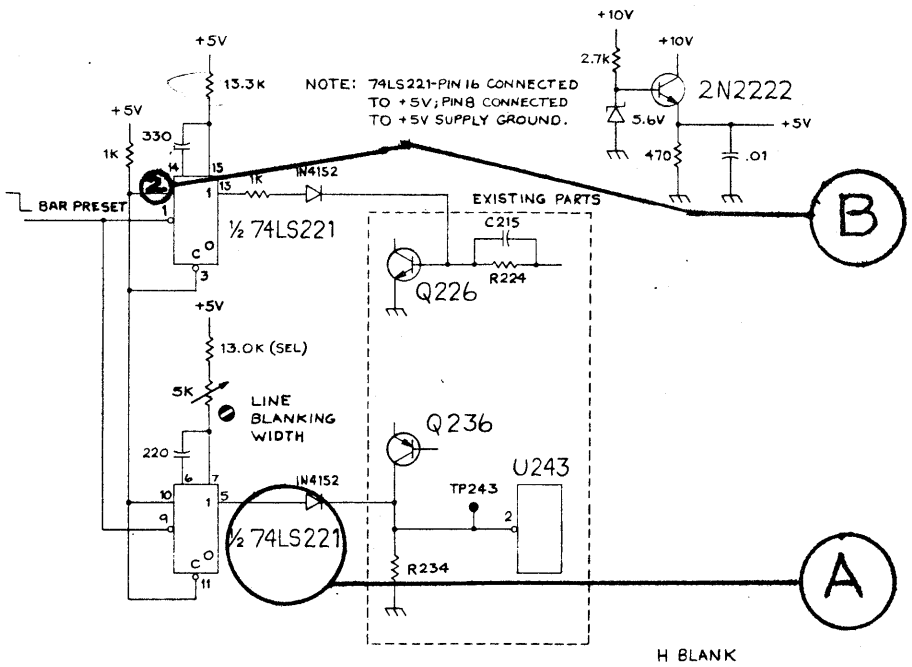

(CONTINUED ON NEXT PAGE)

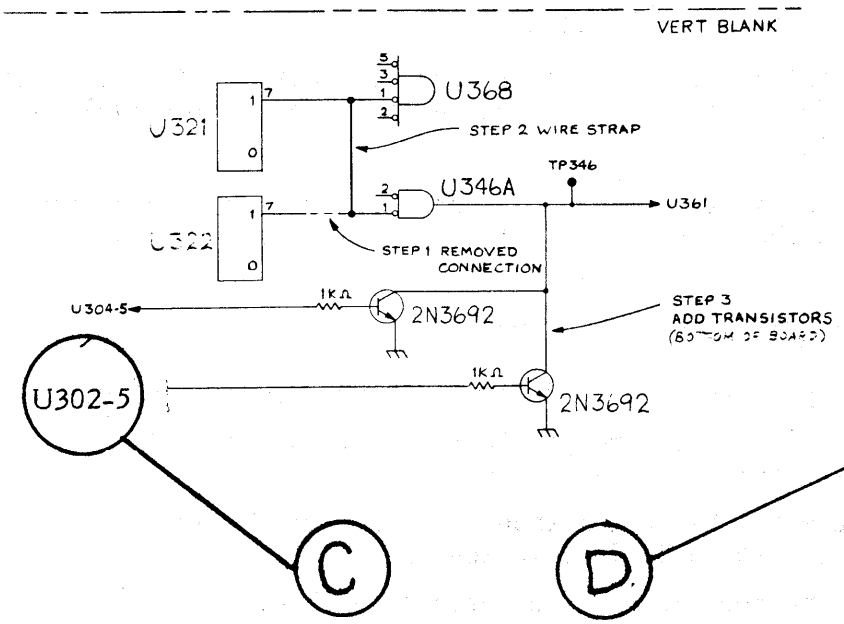

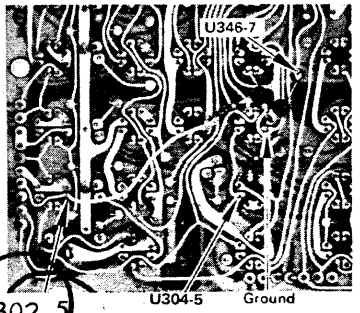

Figure 5. *Bottom view of the Field Timing circuit board showing the added transistors and resistors.*

--Bill Bean
53/108, Ext. 8695

ACCESSORIES

ALLIGATOR CLIPS P/N 344-0046-00

The style of the alligator clip was changed about 1 year ago, but we have had continued complaints about the old style being intermittent and not fiting onto the ground lead. All stock of P/N 344-0046-00 should be checked and purged of the old style clips.

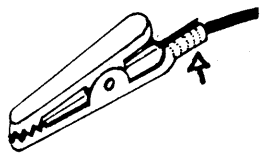

Old style clips have a wrap around back and pressed in threads.

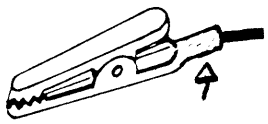

New clips have a longer, solid soldered-on back with machined threads.

--Eilene Dickey
53/108, Ext. 8692

P6105 & P6106 B.N.C. REPLACEMENT

The part number of the B.N.C. connector used on the P6105's and P6106's can be found on Page 284 of the 1981 Tek Product catalog. It is P/N 131-1799-01. This B.N.C. can be changed using a 7/16 inch wrench.

--Eilene Dickey
53/108, Ext. 8692

DF1 - STEP ADDED TO 050-0999-01

Reference: 050-0999-01, which implements
M32233 & M33349, p. 3.

Affected Serial Numbers - B029999 & Below

Please add the following step between existing steps 8 & 9:

() 8a. Cut the run connecting U714-12 and U748-11.

The run is located on the back of A4 - Acquisition Board.

--Stan Uffner
92-236, Ext. 1564

PM108 UPDATE

An update for the PM108 has been initiated by the Logic Analyzer Marketing Group. This update, which affects 25 PM108s, will be installed by DAD Sales Engineers and should be completed by the end of June, 1981.

The following is a list of the problems which this update will remedy.

1. When an extra wait state is inserted in an I/O operation, the cycle will be missed by the 7D02.

2. If more than two wait states are added in any operation, the cycle will be missed.

3. In the interrupt acknowledge cycle, the data is sampled at a point 2 clocks prior to when the data is really valid.

4. If the 7D02 is powered up, and start is hit, the display will show that an interrupt is pending, when in fact, it really isn't.

   After the first interrupt acknowledge cycle occurs, the problem goes away, and the 1's become all 0's.

   Note: Glitches on the VI and NVI lines will cause erroneous interrupt indications.

5. On EI and DI instructions, the NVI and VI disassembly is swapped. That is, when an EI VI was executed, an EI NVI will be displayed.

You can verify that a PM108 has been updated by determining that:

1. Test Number 1 of the Personality Module Diagnostics displays "-1023-02". Reference: PM108 Instruction Manual, Part Number 070-3472-00, Page 6-3, "How to Use the 7D02 Diagnostic Module 9- PER.MOD. - System".

(CONTINUED ON NEXT PAGE)

Partical DIAGRAM 1B

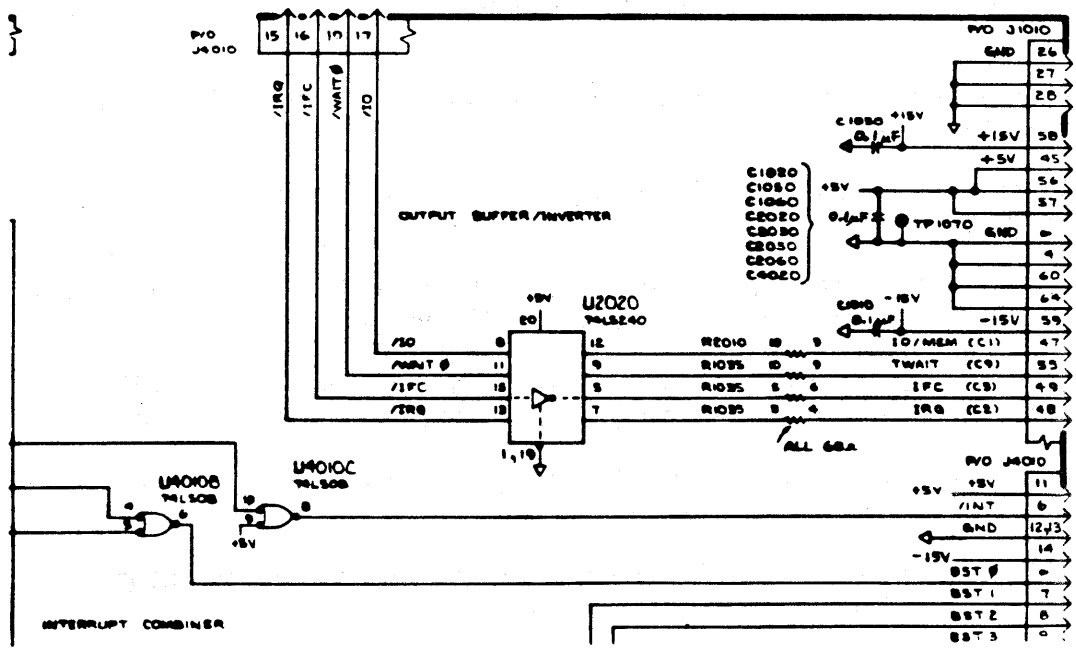

Partical DIAGRAM 2

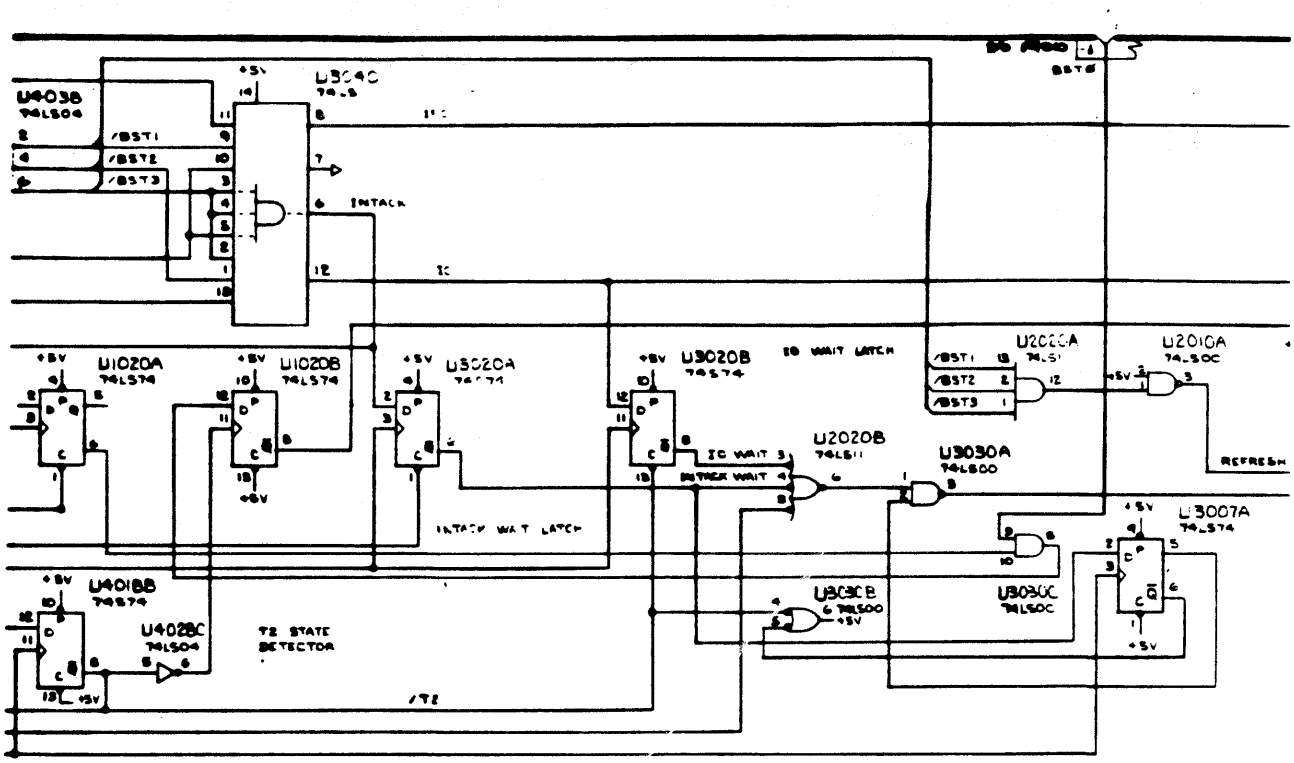

(CONTINUED ON NEXT PAGE)

2. The circuit boards contain the appropriate changes.

3. The PM108 operation does not exhibit the problems listed above.

Refer to the attached diagrams for schematic changes.

This update will also change a portion of the signature tables in the Instruction Manual. These changes will be published shortly.

This information is for reference only; no action is required.

Please call if you have any questions.

--Pat Wolfram
92-236, Ext. 1582

OS-261 MAINTENANCE INFORMATION

The OS-261 is the military version of the 475. All maintenance information used for the 475 may be used for the OS-261.

To meet military specification for environment, a few modifications are added to the OS-261 that are not found on the 475.

1. A 2KΩ 1/8 W Resistor, P/N **317-0202-00, is added to the drain of Q920.**

2. The Thermal cut out is changed to P/N 260-1759-00.

3. All timing capacitors have a bead of silicone adhesive applied to them for vibration.

4. CR170 and CR270 are replaced with .001 uf, 100V capacitors, P/N 281-0770-00 (Schematic number changes to C170 and C270).

5. The leads of R174 and R274 that are connected to ground are now connected to the -8V supply.

6. A resistor 2.7Ω ¼ W, P/N 307-0103-00, is added in series with R10 and R50 (parallel with C12 and C52).

7. All OS-261's will be option 4 (EMI) with the addition of the following to improve EMI:

   a). (2) P/N 108-0262-00, 510 Nh inductor are added to the calibration loop.
   b). A clip is secured by the B trigger BNC and contacts the power [illegible] switch shaft.
   c). A clip is added on top of the CH1 and CH2 probe coding lamp housing and contacts the attenuator switch shafts.
   d). A clip is added to the front of the Timing Switch cam cover and mades contact with the underside of the bracket used to secure the front section on the Trigger Generator Board.

--Mike Laurens
53-108, Ext. 8688

PORTABLES, T900 SERIES RESPONSIBILITY LIST

Please refer to the following lists and direct your inquiries to the proper area for the listed products.

Factory Service, Extension 8600 (Merlo Road), 56/103
(Technical assistance, i.e. troubleshooting, calibration)

211	455	T922R
323	465	T932/A
324	465M	T935/A
326	T912	DM40
432	T921	DM43
442	T922	

Service Support, Mike Laurens, Extension 8688 (Merlo Road), 53/108

212	434	1105
213	464	1106
214	465B	2213
221	466	2215
305	468	2335
314	475/A	2336
335	485	DM44

This division of responsibilities is effective July 1, 1981.

--Roy Lindley
53/108, Ext. 8687

2213, 2215 MAINTENANCE INFORMATION II

SQI Information:

	Quote	Clean	Cal
2213	.50	.50	1.25
2215	.50	.50	1.50

Manual Information:

2213 - P/N 070-3827-00

2215 - P/N 070-3826-00

The service manual part numbers are valid, however, manual orders will not be filled before Week 30.

Torx Drive Tips

The 2200 Series use special screws with unique head drives. The following include the size and part number for the screw driver tips:

T7 P/N Not set up at this time

T8 P/N 003-0964-00

T9 P/N 003-0965-00

T15 P/N 003-0966-00

The T-7 part number will be printed in the Wizard as soon as possible.

Pilot Change Information

#10 -- Improves trigger performance

A10 U603 Changes from P/N 156-0331-00 to P/N 156-1611-00
A13 U696 Changes from P/N 156-0331-00 to P/N 156-1611-00

#12 -- Improves trigger performance

A10VR483 Changes from P/N 152-0195-00 to P/N 152-0662-00
A10R481 Changes from P/N 315-0821-00 to P/N 321-0191-00
A10R581 Changes from P/N 315-0911-00 to P/N 321-0191-00

#13 -- A10C174 Changes from P/N 283-0154-00 to P/N 281-0759-00
A10C274 Changes from P/N 283-0154-00 to P/N 281-0759-00

To eliminate potential oscillations in CH. 1 A10C265, P/N 281-0773-00, was added to W1000 Pin 13 at switch S264 and ground.

#15 -- (2215 Only) Improves delayed sweep performance. Remove A13VR664 and replace with R666 15.4K, 1/8W, 1%, P/N 321-0307-00.

--Mike Laurens
53/108, Ext. 8688

4050 SERIES MAG TAPE DRIVE CABLE

It has come to our attention that the cable used to connect the 119-0708-0X tape drive to the 4051, 4052, and 4054 is unreliable. Part numbered 175-1725-00 and 175-2123-00 - these cables should be highly suspect when making a tape drive service call.

OLD STYLE

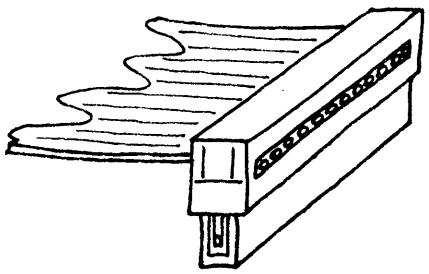

NEW STYLE WITH STRAIN RELIEF

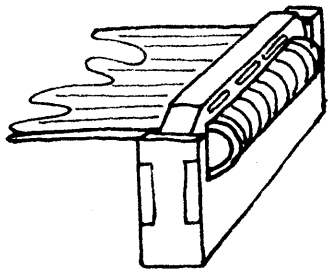

There is now a new style cable that should prove more reliable than the old style. Be sure to have one of the new styles handy when making a 4050 service call, and try replacing it and see if it fixes the problem.

-- John Stillmaker
MRC, Ext. 8619

4611/4612: HUMIDITY EFFECTS ON COPY QUALITY

Papers used for electrostatic hardcopying are generally affected by humidity. The electrographic paper used in the 4611 and 4612 is no exception.

Tektronix electrographic hardcopy paper is made and packaged in a 45% to 55% relative humidity environment at constant temperature. However, only a few seconds of exposure to ambient humidity are necessary to change the paper's water content. An extreme change will adversely affect the paper's ability to attract and hold electrostatic charge.

As mentioned in the 4611 and 4612 Service Manuals, two or three initial copies may have to be discarded upon installation of a roll of paper. In a very dry or very humid environment, signs of degradation may be seen in the first lines of a copy after twenty minutes at idle.

These characteristics must be kept in mind when storing electrographic paper. Humidor type containers or air-tight plastic bags should be used.

--George Kusiowski
63/503, ext. 3928 (WI)

BUS, CONDUCTOR PN INCORRECT

In the 1804 Test Station Manual, volume 2, 070-3331-01, the part number for the conductor bus is incorrect. The correct part number (see fig. 2 chassis, index #2.2) should be 131-0566-00 with the description "Bus, conductor: Dummy Resistor". It is also known as a zero ohm resistor or shorting strap.

-Joe Lipska
92-236, Ext. 1634

PRAM CLOCK PULSE/ERROR CONTROL IMPROVEMENT

There is a 040-0981-00 kit available that provides parts and instructions to modify the Pram. This modification is to the error logic and controller circuit board assemblies. By retiming the error control instructions to update on TOD only, the multiple (2- or 4-) clock pulse modes will operate more effectively. Also, the error control multiplexer circuitry is modified so that branching on an error will occur only in Error Mode 0.

The mod instruction kit also includes manual change information on inserts for the hardware and software programming manuals.

This mod is for the following Tektronix test stations that are equipped with the Pattern RAM Option:

1803 Serial numbers B010100-B030209

1804 Serial numbers B010100-B050132

1805 Serial numbers B010100-B019999

-Joe Lipska
92-236, Ext. 1634

TEKTEST III VERSION 4.00

Version 4.00 software is ready for release. This software is faster than version 3.02 and has increased the monitor area of the operating system. It requires a minimum hardware of floating point processor and 42K of memory. It also has some additional subroutines and functions. We require version 4.00 software be licensed. All new orders for version 4.00 software should be placed with a system sales engineer.

*If the software is being sent directly to a customer, they will be requested to sign an enclosed license agreement. The top two copies (yellow and white) should be returned to Liz Nutter at Tektronix delivery station 94-512. If field service personnel install the software, they should have the customer sign the license. Then the service personnel should return the top two pages to Liz Nutter.

The software updates for version 4 will be the same as version 3, with one minor difference: version 4 software will be listed under IDENT ending with a 4. A 3260 version 4 update will be under Ident 604.

Version 4 is going to require that those service centers that are participating in update program send two disks per system type. Like version 3, one disk is standard software and one disk is options software. This means that if your service center supports the S-3260, 50/70 and 80 you need 12 disks. This will enable you to keep a complete set of software.

If there are any questions, contact Service Support.

--Joe Lipska
92-236, Ext. 1634

S3200: R1340 EXTENDER BOARD IMPROVED

Reference: Mod #M40963

Excessive crosstalk in the extender may cause incorrect data to be clocked into the interface. Two inner layers which will serve as 5 volt and ground planes have been incorporated into the build process for the extender board. The added planes act as a shield to eliminate crosstalk. The assembly number will change from 670-1263-01 to 670-1263-02.

-Jim Stubbs
92-236, Ext. 1287

1800 SERIES TEST STATION WIRE LIST CORRECTION

A correction is needed in the 1803 wire list manual 070-3370-00 and the 1804, 1805 wire list manual 070-3371-00. The STATION ENABLED signal going to the status board in the 1340 is shown incorrectly. In the wiring manual, the signal from the status board J10 Pin A21 is shown as STATION ENABLE. The difference is between ENABLE and ENABLED. To correct the manual, delete J10 A21 from all references to STATION ENABLE and add to all references to STATION ENABLED. All signals discussed are true low.
Example: 1803 manual, see page 2-36, and 1804,1805 manual, see page 2-38.

STATION ENABLE/

Delete →	+J10 A21	+J411 40	+J521 B	J802 25	J807 10
	J809 E/	J819 Y	J830 1	J916 B	

STATION ENABLED/

+J301A 34	J50 A20	J52 9	J802 11	J825 16
J829 9	J901A 34	J10 A21		

ADD

The following pages need corrections:

1803 Wire List Manual	1804,1805 Wire List Manual
Pg 2-36, 3-30, 3-36, 3-39 3-55, 3-68, 3-70, 3-114	Pg 2-38, 3-31, 3-37, 3-40 3-57, 3-70, 3-72, 3-117

My thanks to Gary Riggle for bringing this to our attention.

--Joe Lipska
92-236, Ext. 1634

7912AD: ADDITIONAL INFORMATION ON WIZARD ARTICLE ISSUE 11-5, TITLED, "7912AD UNDERRATED CAPACITORS."

REFERENCES: WIZARD ARTICLE ISSUE 11-5 (DATED MARCH 27, 1981), PAGE 30; MODIFICATION #M42734

This change of capacitor C348 on the regular circuit board changes the board's part number from 670-5418-02 to a 670-5418-03. The starting Serial Number is B090749.

--Randy Newton
92-236, Ext. 1635

7912AD: CONNECTOR TO AND FROM POWER SUPPLY CAN BE REVERSED CAUSING CIRCUIT DAMAGE

References: Modification Number M38841; Manual 070-2385-00, Figure 5 (Power Supply)

Symptoms: Reversing Connector P312 of the power connector circuit board, or P104 of the rectifier circuit board could cause major circuit damage.

Solution:

Step 1. On board 670-5157-00 cut Pin 5 of P312 (both A & B sides).

Step 2. On board 670-5158-00, -01, -02, cut Pin 5 of P104 (both A & B sides).

Step 3. Add 1 plug (134-0153-00) to the fifth slot on both ends of the cable connectors going from A62P312 and A86P104. (Total 4 plugs.)

This mod changes the 670-5157-00 board to a 670-5157-01 and the 670-5158-02 board to a 670-5158-03. The starting serial number is B090749.

--Randy Newton
92-236, Ext. 1635

7912AD: IMPROVED RELIABILITY OF THE FAN CIRCUIT

References: Modification #37153; Manual 070-2385-00 (Schematic Diagram 31); 670-4957-00 Fan Board.

Symptoms:

1. When more then one instrument are daisy-chained, the remote-actuate input may not respond. This would cause that particular power supply to shut down.

2. There has been a high failure rate of Q128 and Q232 Transistors on the A80 Fan Board (670-4957-00).

Solutions:

1. Replace CR462 (on the 670-4957-00 board) with a Germanium Diode, Part Number 152-0075-00.

2. Replace Q128 and Q232 (on the 670-4957-00 board) with the 050-1349-00 parts replacement kit.

Starting serial number for this mod is 'B040522'.

--Randy Newton
92-236, Ext. 1635

7912AD: IMPROVED RELIABILITY OF THE POWER SUPPLY

References: Modification #M40488; Manual 070-2385-00, Figure 5, Schematics Diagram 32 and 33.

Symptoms:

1) Power supply shuts down due to failure of CR015, CR016, CR017 and CR018 of the rectifier circuit board (670-5158-00).

2) Loose hardware causing shorts or opens in the power supply.

3) The rectifier circuit could move and cause structural damage to the board, or short components to the case.

4) If the -50V power supply shorts to ground it will destroy Q228 of the regulator circuit board (670-5418-00, -01).

Solutions:

1) CR015, CR016, CR017 and CR018 are under spec'd for circuit current requirements. On the rectifier circuit board (670-5158-00) replace CR015, CR016, CR017 and CR018 with four diodes part #152-0661-00.

2) On the rectifier circuit board (670-5158-00) change the seven nut assemblies with washer to selflocking nuts part #210-0589-00 for the following inductors: L024, L026, L034, L124, L204, L224, and L234.

   Note: The above solutions (1 & 2) change the rectifier circuit board 670-5158-00 to a 670-5158-02.

3) To provide added support to the rectifier circuit board add a support bracket (386-4641-00) which is attached to the fan as shown in diagram 'A'.

   Needed parts are as follows:
   a) support bracket - PT#386-4641-00
   b) 1 screw - PT#211-0523-00
   c) 1 nut - 210-0457-00

4) A run is missing going from CR320 to Q228 (A side) on the regulator circuit board (670-5418-01). Strap the anode of CR320 to the base of Q228 as shown in diagram 'B'. This strap changes regulator circuit board 670-5418-01 to a 670-5418-02. There is no change to the schematic diagram 33.

NOTE: These four solutions change the power supply assembly part number 620-0269-02 to a 620-0269-03.

CONTINUED ON NEXT PAGE

7912AD: IMPROVED RELIABILITY OF THE POWER SUPPLY CONTINUED:

DIAGRAM 'A'

Partial View of Power Supply
(refer to figure 5 in the Service Manual)

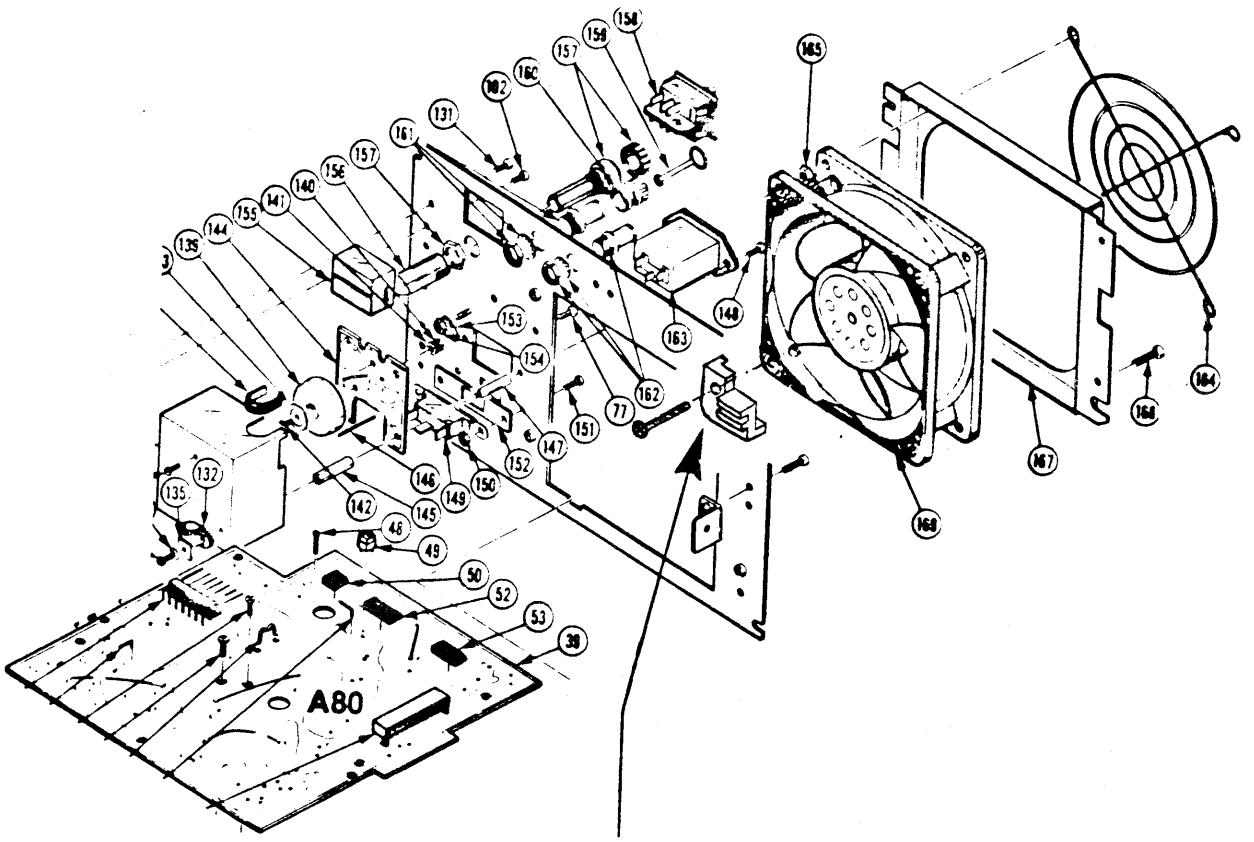

Add rectifier circuit board support bracket (386-4641-00), which is mounted with (1) screw (211-0523-00) and (1) nut (210-0457-00) to the fan as shown.

(CONTINUED)

7912AD: IMPROVED RELIABILITY OF THE POWER SUPPLY CONTINUED:

DIAGRAM 'B'

Partial backside view of the regulatory circuit board, 670-5418-01, which changes to 670-5418-02.

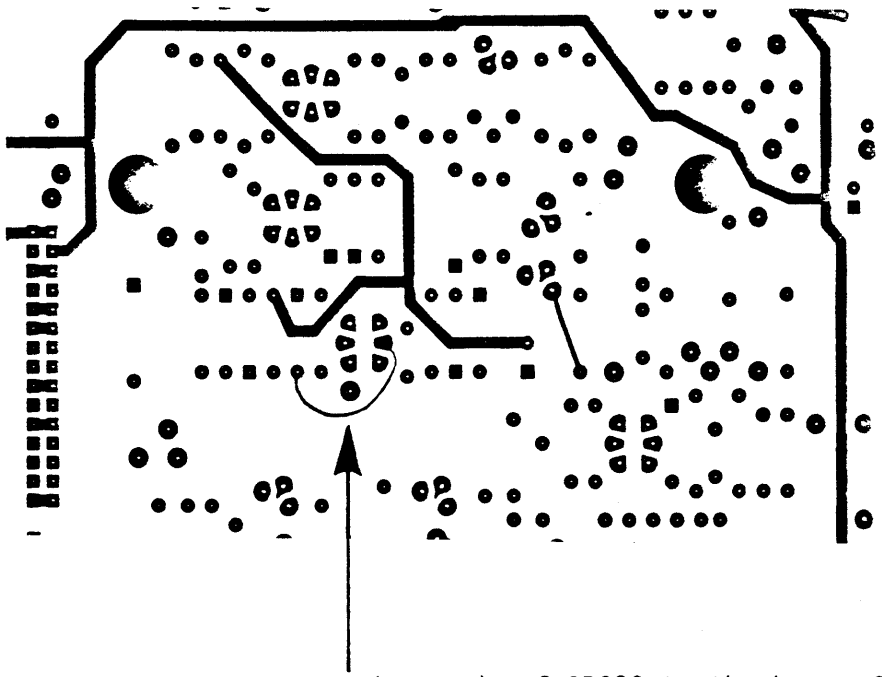

Strap the anode of CR320 to the base of Q228 as shown.

-Randy Newton
92-236, Ext. 1635

7912AD: IMPROVED RELIABILITY OF THE +365 VOLT POWER SUPPLY

REFERENCE: MANUAL 070-2385-00 (Schmatic Diagram 33 ; Modification M43036)

SYMPTOM: Hi-Voltage Shutdown.

SOLUTION: On the (670-5418-03), Regulator Circuit Board, Replace R546 with a 330Kohm Resistor (Part # 305-0334-00). Add a 6.8Kohm (Part # 315-0682-00) Resistor between R546 and the collector of Q540 as shown in Diagram "A." The Schematic Equivalent is shown in Diagram "B."

This mod changes the 670-5418-03 to a 670-5418-04. The starting serial number for the mod is B090749.

DIAGRAM A

A partial front view of the Regulator Circuit Board (670-5418-03 which changes to an -04).

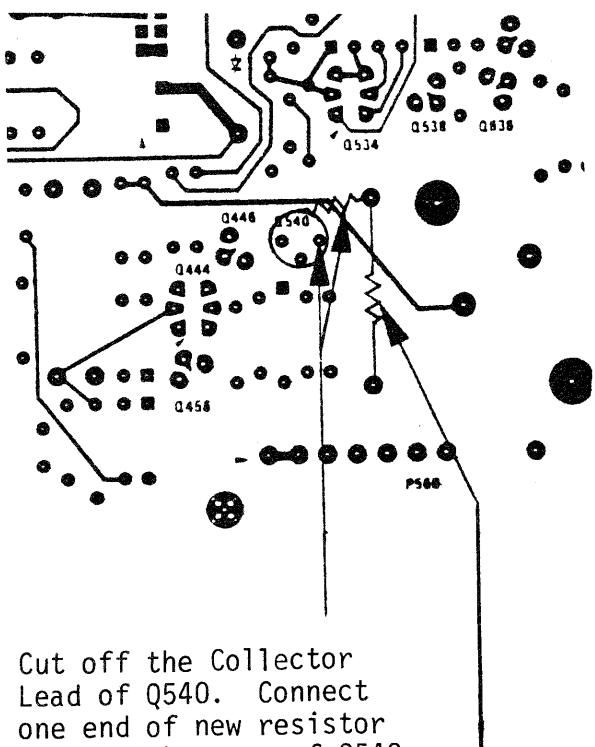

Cut off the Collector Lead of Q540. Connect one end of new resistor R540 to the case of Q540. Connect the other side of R540 to R546 as shown.

Replace R546 with a 330Kohm (305-0334-00).

DIAGRAM B

This is the schematic change after Mod M43046. Schematic Diagram 33

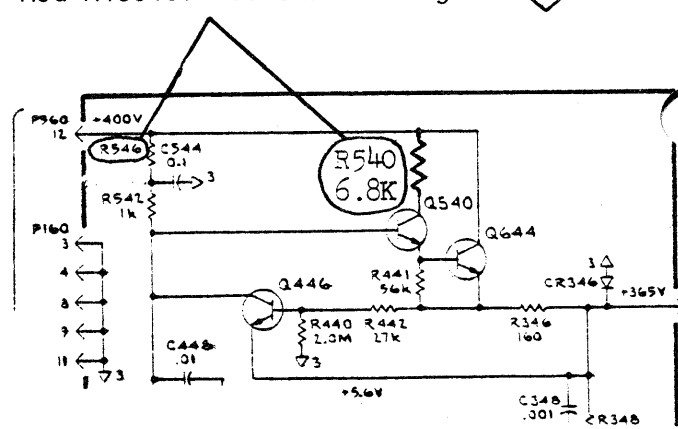

--Randy Newton
92-236, Ext. 1635

7912AD: INCREASE AIR CIRCULATION IN THE POWER AND THE INSTRUMENT

Reference: Modification Number M38691

If an instrument is in a hot (close or above spec) atmosphere, or if more air circulation is required, there is an 040-0989-00 mod kit for the power supply. It consists of a new fan and associated hardware.

There is also a parts replacement kit, Part Number 050-1421-00, comprised of the fan, fan circuit, and a label.

This mod changes an 620-0269-03 power supply to a 620-0269-04. The fan circuit board will change from a 670-4957-03 to a 670-4957-04.

The starting serial number for this mod is B09XXXX.

--Randy Newton
92-236, Ext. 1635

7912AD: PREVENT DAMAGE TO TRANSISTORS WHEN CHANGING PARTS

References: Service Manual - 070-2385-00
(Mechanical Breakdown Figure 5; Power Supply);
Modification #M38842.

Symptom: On the regulator board (670-5418-XX) of the power supply, Q012, Q016, Q022, Q030, and Q040 may get their plastic cases damaged due to the Kep nuts being too large.

Solution: Use Hex nuts, part #210-0406-00 for the above listed transistors on the regulator circuit board. Refer to figure 5 (power supply), item 99.

-Randy Newton
92-236, Ext. 1635

7912AD: TO MAKE ALL POWER SUPPLIES INTERCHANGEABLE

References: Service Manual 070-2385-00 (Figure 3; Chassis, and Figure 5; Power Supply); Mod #M39743

Symptom: A power supply with part number 620-0269-02 and higher will not fit into an instrument below serial number B060598. There has been an additional support mount added to the power supply cover which requires an additional hole in the chassis (refer to diagram 'A' and 'C').

This mod provides additional support for the power supply.

Solution:

(1) Remove all boards and the power supply from the 7912AD. Then carefully cover the connectors on the mother board, preventing the possibility of getting metal shavings in them. Drill a hole (¼ of an inch in diameter) in the chassis assembly using diagram 'A' as a template and following the measurement procedures carefully. Upon completion, clean the area carefully, insuring all metal shavings have been removed.

(2) Remove the power supply cover assembly. Then drill a hole (3/16 of an inch in diameter) in the cover using diagram 'B' as a template and following the measurement procedures carefully.

(3) Referring to diagram 'C', insert the power supply support mount (P/N 426-1674-01) with lockwasher (P/N 210-0008-00) and nut (P/N 220-0555-00).

This modification changes the power supply assembly from a 620-0269-01 to a 620-0269-02. This is not a complete recap of modification #M39743 (see notes on diagram 'C'). This is the necessary part of the modification to make all power supplies fit old main frames.

(CONTINUED)

With power supply removed, looking from rear to front where the power supply was. (Refer to diagram 'C', part 1.) This is the chassis.

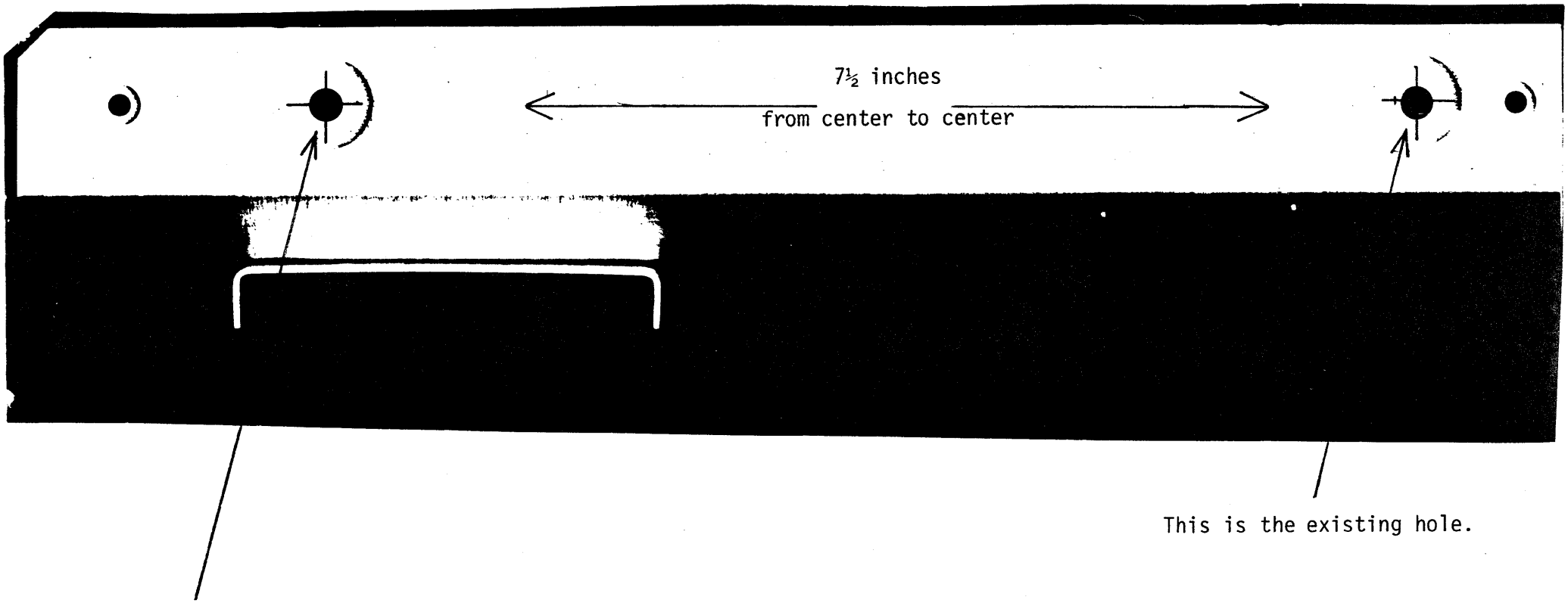

DIAGRAM 'A'

Drill a hole ¼ inch in diameter. Ensure vertical centering is exactly the size as the existing hole on the right. Once you mark where the hole is to be drilled, take special care and measure the distance from center to center, ensuring 7½ inches between centers.

(CONTINUED)

7912AD: TO MAKE ALL POWER SUPPLIES INTERCHANGEABLE

Partial View of the Power Supply Cover
That Faces Inside of the Instrument.
(refer to diagram 'C' for location reference)

Existing hole.

Mark the hole after ensuring vertical alignment and exactly 7½ inches of distance between holes. Then drill a hole 3/16" in diameter.

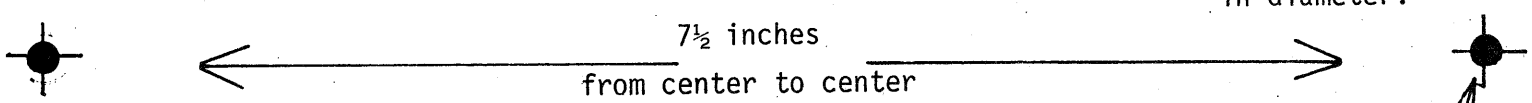

Refer to diagram 'C', parts 2A and 2B.

After hole is drilled, attach the support mount (P/N 426-1674-01) with lockwasher (P/N 210-0008-00) and nut (P/N 220-0555-00).

DIAGRAM 'B'

7912AD: TO MAKE ALL POWER SUPPLIES INTERCHANGEABLE

DIAGRAM 'C'

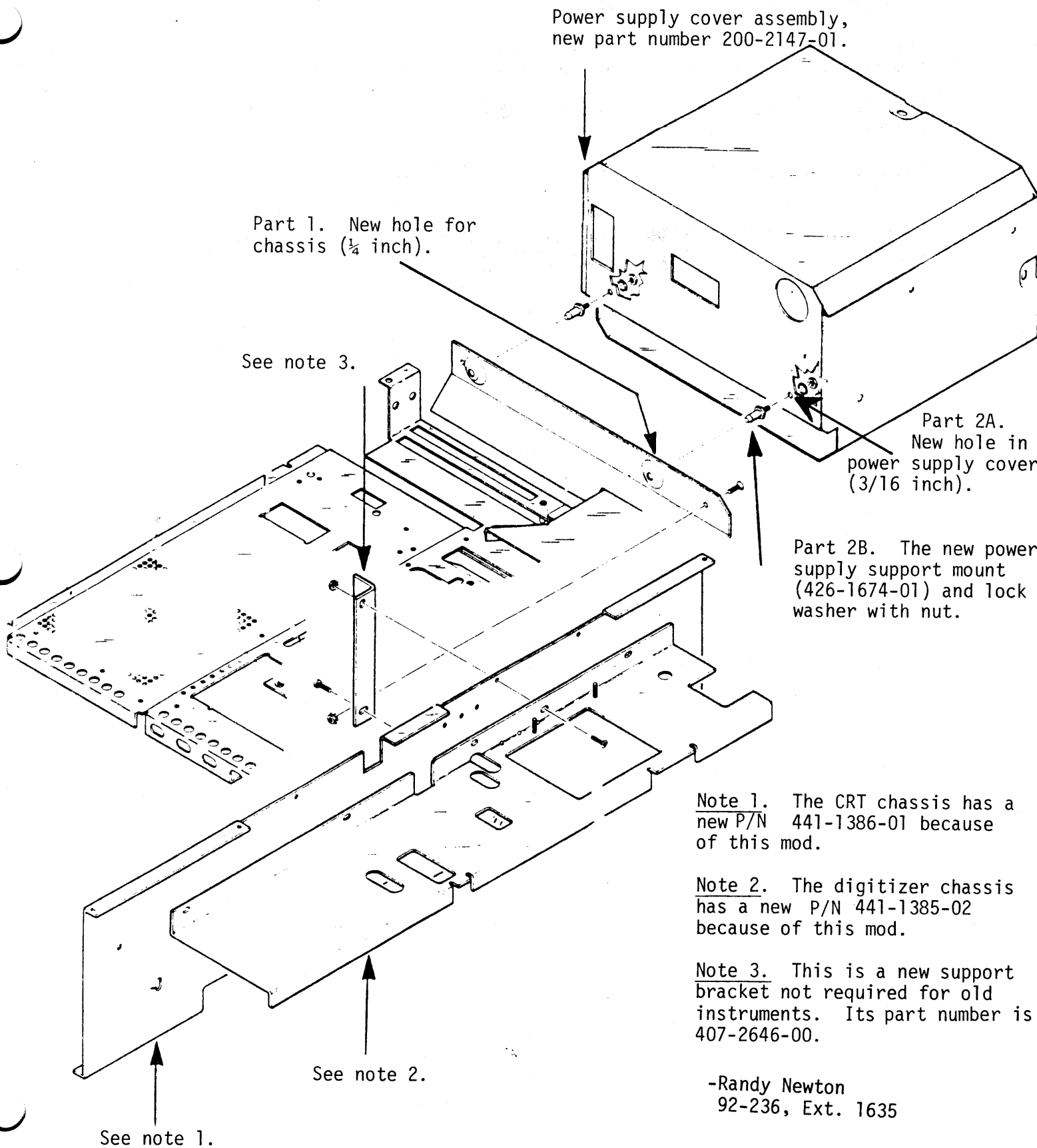

Note 1. The CRT chassis has a new P/N 441-1386-01 because of this mod.

Note 2. The digitizer chassis has a new P/N 441-1385-02 because of this mod.

Note 3. This is a new support bracket not required for old instruments. Its part number is 407-2646-00.

-Randy Newton
92-236, Ext. 1635

JULY 17,1981
ISSUE 11-13

7912AD: UPDATING THE POWER SUPPLY TO THE MOST RECENT VERSION

References: Service Manual 070-2385-00

The following articles provide the capabilities to update all power supplies to the most recent version (P/N 620-0269-04).

Modifications M38842, M37153, and M39743 change the power supply from a 620-0269-01 to a 620-0269-02.

Modification number M40488 change the power supply 620-0269-02 to a 620-0269-03.

Modifications M43046, M38841, M42734, and M38691 change the power supply from a 620-0269-03 to a 620-0269-04.

-Randy Newton
92-236, Ext. 1635

Cleaning and Maintenance of Tek-Made Rotary Switches

Many problems relating to Tek-made rotary switches can be attributed to improper cleaning and maintenance procedures. The correct procedures mentioned herein are not presented in most instrument manuals, and apply to all Tek-made rotary switches irrespective of their configuration.

Analysis of failed rotary switches show three primary reasons for failure: (1) contact contamination; (2) contact damage; (3) retainer spring off pawl.

Contact contamination and damage occur most often when cleaning is attempted while the switch is assembled. To avoid damage, remove switch from instrument, disassemble and use the cleaning procedure described on page 3.

Retainer spring off pawl is limited to switches with the "pull-to-turn" feature, and can be repaired by reinstalling the same spring or replacing it with a new spring (P/N 354-0550-00).

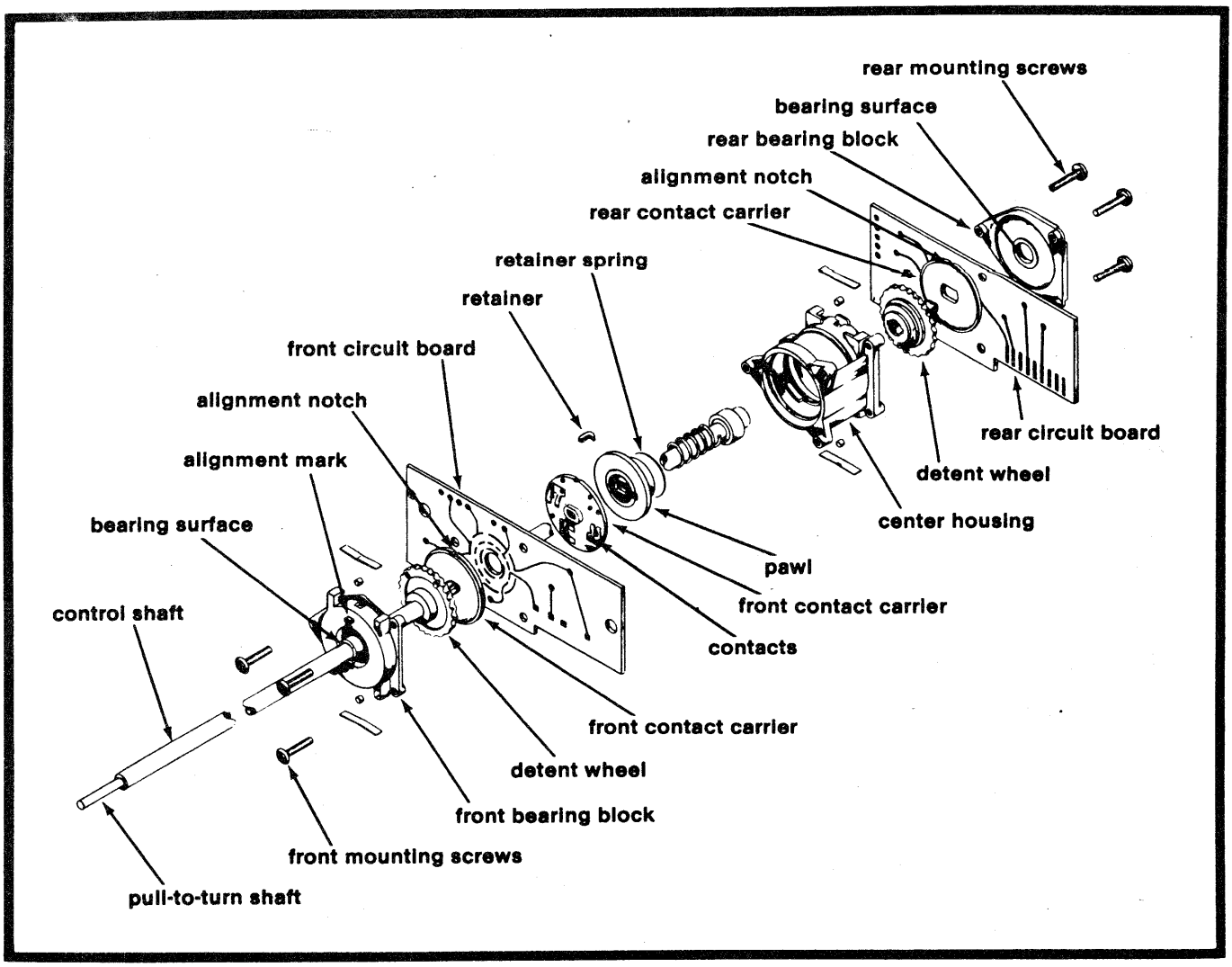

PROCEDURE

Disassembly

1. Remove switch assembly from instrument (follow directions in instrument manual for this).

2. Before beginning disassembly, rotate control shaft to the full counter-clockwise position. Compare switch to assembly drawing. Note position of alignment mark on front bearing block and positions of circuit boards. They should be the same after reassembly.

3. Disassemble switch from the rear toward the front. Lay out parts in the disassembly sequence. On switches with the "pull-to-turn" feature, maintain pressure on spring-loaded center assembly to prevent loss of parts. Special note: Contact carriers are mechanically, **but not electrically**, interchangeable. You may want to mark carriers to assure that they are not mixed during reassembly.

Cleaning

4. Clean front and rear contacts **gently** with a brush and isopropanol (isopropyl alcohol) or fotocol (ethyl alcohol) using caution to avoid damage. Some film deposits may not be removed by this procedure. For these cases, use an Eberhard Faber "Pink Pearl" eraser and rub very gently. Do not use typewriter or fiberglass erasers because they are too abrasive and will remove excessive amounts of gold from the contacts. After using eraser, clean with alcohol and brush to remove all residue.

5. Lubricate contact surfaces on both circuit boards with a thin coat of No Noise (P/N 006-0442-00).

6. Lubricate front and rear bearing surfaces with silicone grease (P/N 006-1353-01) using care to avoid contaminating contact side of carriers.

Reassembly

7. Reassemble front towards the rear. Most switch alignment problems will be eliminated by following the correct reassembly procedure.

8. Install front control shaft/detent wheel assembly in front bearing block. With enough tension of shaft to hold detent wheel in position, rotate shaft to assure full range of switch positions. If travel is restricted to a few positions, remove detent wheel, rotate shaft slightly, and try again. Rotate shaft to full counter-clockwise position and hold.

9. Install first front contact carrier (carriers with "double D" hole can be installed 180° out of position). Align notch on carrier with alignment mark on front bearing block.

10. Slide front circuit board over shaft. Be sure protrusions on front bearing block mate with holes in circuit board to avoid cocking switch out of line.

11. Install second front contact carrier. Follow alignment procedure in Step 9. (On units with a single circuit board, install rear bearing block. Install mounting screws and proceed to Step 19.)

12. On units with dual circuit boards and pull-to-turn feature, install second shaft with detent wheel in place.

13. Install center housing, seat it with front circuit board and hold in place. Install front mounting screws.

14. Install rear detent wheel. Rotate shaft to full counter-clockwise position. Hold pull-to-turn shaft out until rear bearing block is mounted (in Step 17).

15. Install rear contact carrier. (Follow alignment procedure in Step 9.)

16. Install rear circuit board.

17. Install rear bearing block. Hold it in place and release pull-to-turn shaft.

18. Be sure center housing and rear bearing block are seated on circuit board. Install mounting screws.

19. Torque all mounting screws to 1.5 lbs.

20. Check shaft(s) for proper rotation.

21. Install switch assembly in instrument.

22. Rotate control and pull-to-turn shafts to full counter-clockwise position and install knobs.

Inserted by--
Mike Laurens
53/108, Ext. 8688

92-515

MICHAEL A MIHALIK

COMBINATION WIZARD

Tektronix®
COMMITTED TO EXCELLENCE