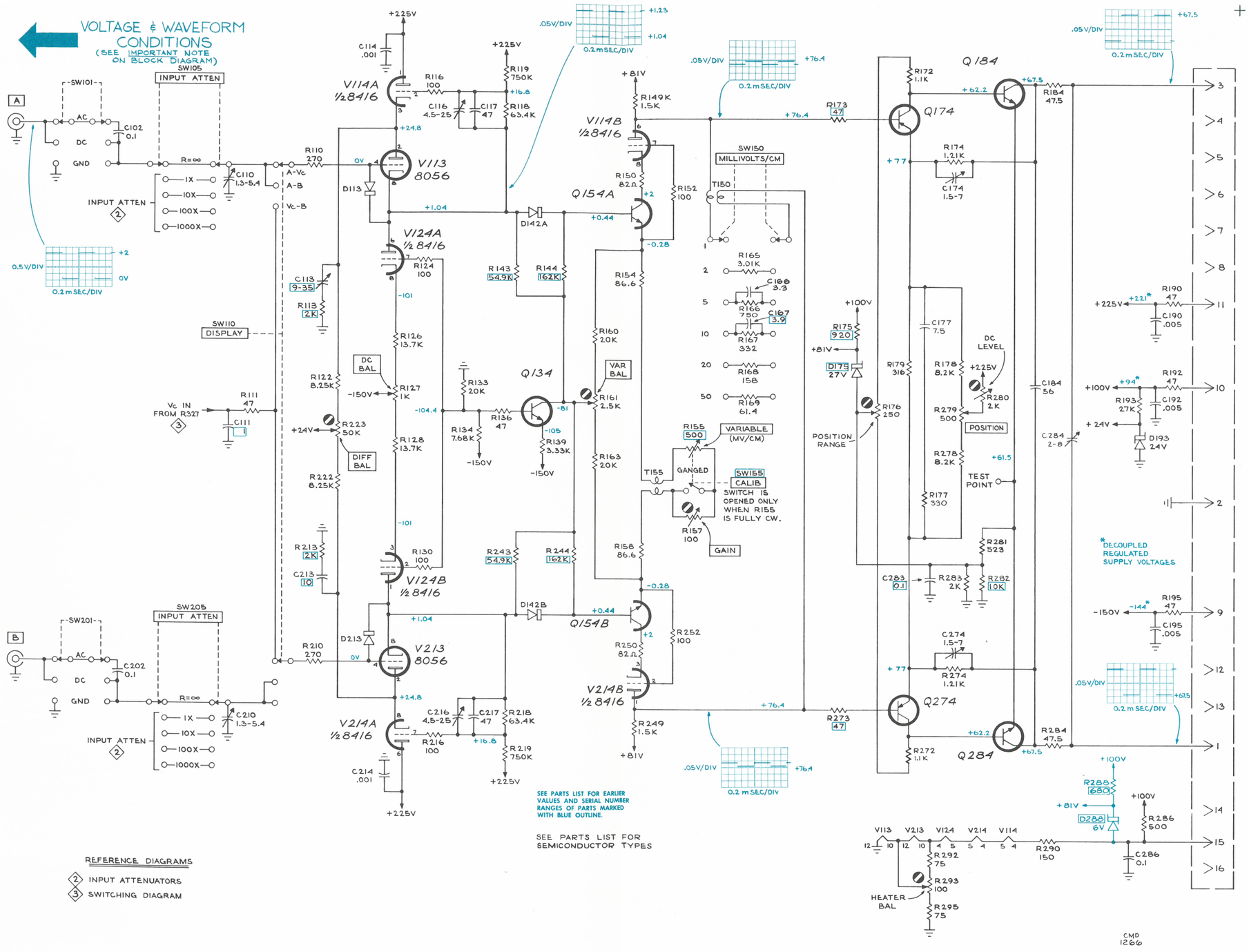

TYPE W PLUG-IN

G1

HIGH-GAIN DIFFERENTIAL COMPARATOR
(S/N 101-3269)

1

HIGH-GAIN DIFFERENTIAL COMPARATOR

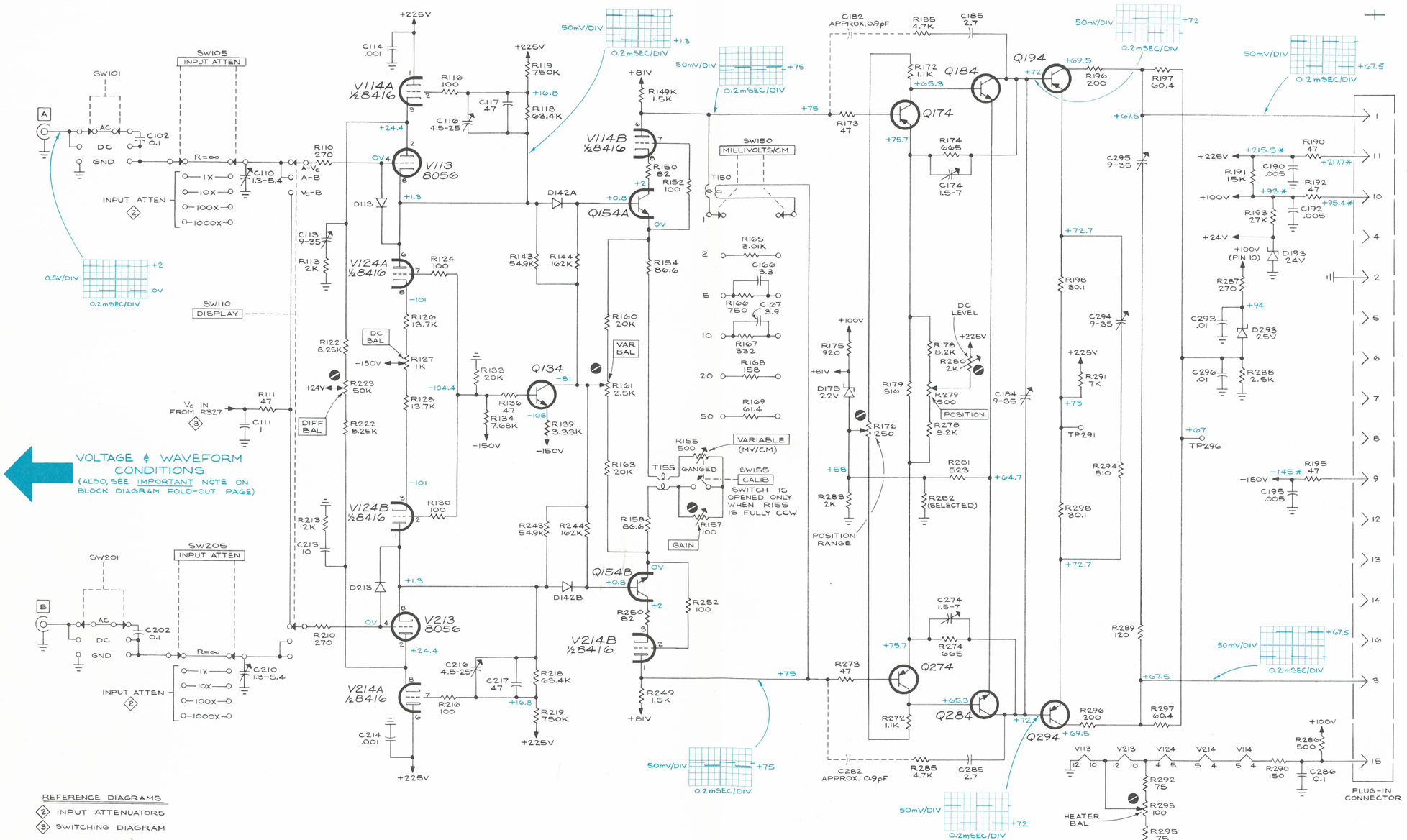

TYPE W PLUG-IN

A

HIGH-GAIN DIFFERENTIAL COMPARATOR 1

(S/N 3270-UP)

W 567

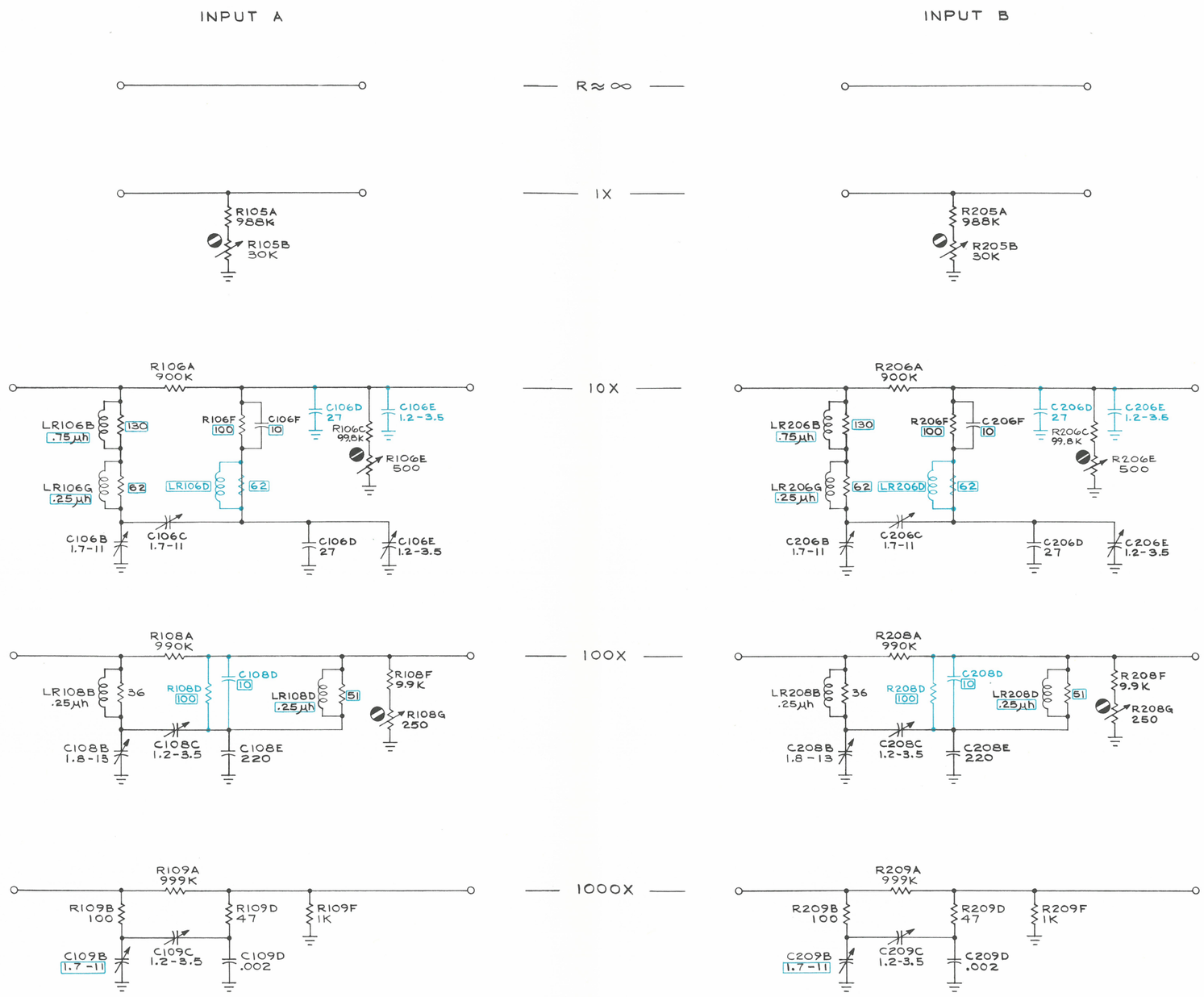

SEE PARTS LIST FOR EARLIER VALUES AND SERIAL NUMBER RANGES OF PARTS MARKED WITH BLUE OUTLINE.

MRH
466

TYPE W PLUG-IN

C_2

INPUT ATTENUATORS ②

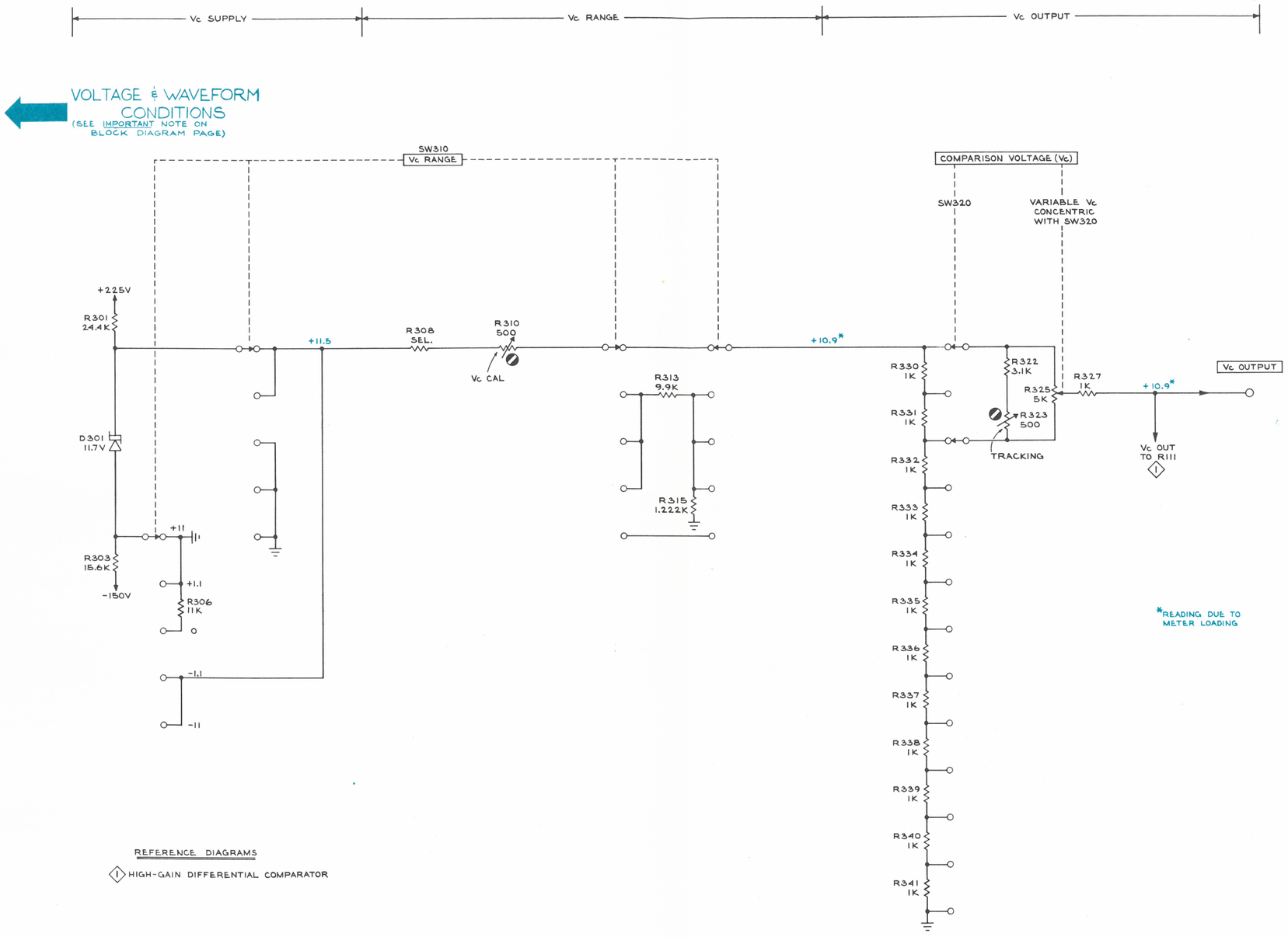

CMD 964

TYPE W PLUG-IN

A1

SWITCHING DIAGRAM 3

SWITCHING DIAGRAM

TEXT CORRECTIONS

Section 5 Calibration

CHANGE: All references to the TEKTRONIX TYPE 105 and TEKTRONIX TYPE 107 Square Wave Generators, change to TEKTRONIX TYPE 106 Square Wave Generator.

Page 5-1 Equipment Required

DELETE: (7) "Square-wave generator, TEKTRONIX TYPE 105
Required Specifications: 13 nsec ...".

(8) "Square-wave generator, TEKTRONIX TYPE 107
Required Specifications: 3 nsec...".

ADD: Square-wave generator, TEKTRONIX TYPE 106

Required specifications: (HIGH AMPLITUDE)

10 to 100 volts across it's 600 Ω internal load

13 nsec or less risetime into 50 Ω termination

output frequency of 1 kHz and 10 kHz

Required Specifications: (FAST-RISE ±)

0.1 to 0.5 volts peak to peak

3 nsec or less risetime into a 5 nsec coaxial, terminated in 50 Ω

output frequency of 450 kHz

ADD: Cable, 5 nsec coaxial, supplied with the Type 106

ADD: Termination, 50 Ω GR to BNC, supplied with the Type 106