TELEQUIPMENT

OSCILLOSCOPE
TYPE S61

INSTRUCTION MANUAL

TELEQUIPMENT ®

DANGER

It is not possible to screen all high voltages, so care should be taken not to touch high voltage tags. Also where possible the instrument should be unplugged AND switched off during servicing. A BLEEDER PATH FOR THE EHT IS NOT PROVIDED, so after switching off and before touching any internal parts, the EHT should be discharged by temporarily shorting the appropriate points to chassis, (for instance the CRT cathode pin and PDA connector where applicable).

FOR SERVICING AND SPARES ENQUIRIES
SEE THE INFORMATION AT START OF SECTION 5.

TEKTRONIX U.K. LTD
313 Chase Road
Southgate,
London N14 6JJ
ENGLAND.

Telephone
01-882 6100
Telex: 262004
Cables:
TELEQUIPT LONDON N14

TEKTRONIX INC.,
P.O. Box 500
Beaverton,
Oregon (97005)
U.S.A.

Telephone
(503) 644-0161
Telex: 36 0485
Cables:
TEKTRONIX

OSCILLOSCOPE TYPE S61

INSTRUCTION MANUAL

070-2130-00

Issue 4 (686051)
November 1977

Printed in England by D & H NEWMAN LTD, 29 Harcourt Street, London W1. 01-262 6356

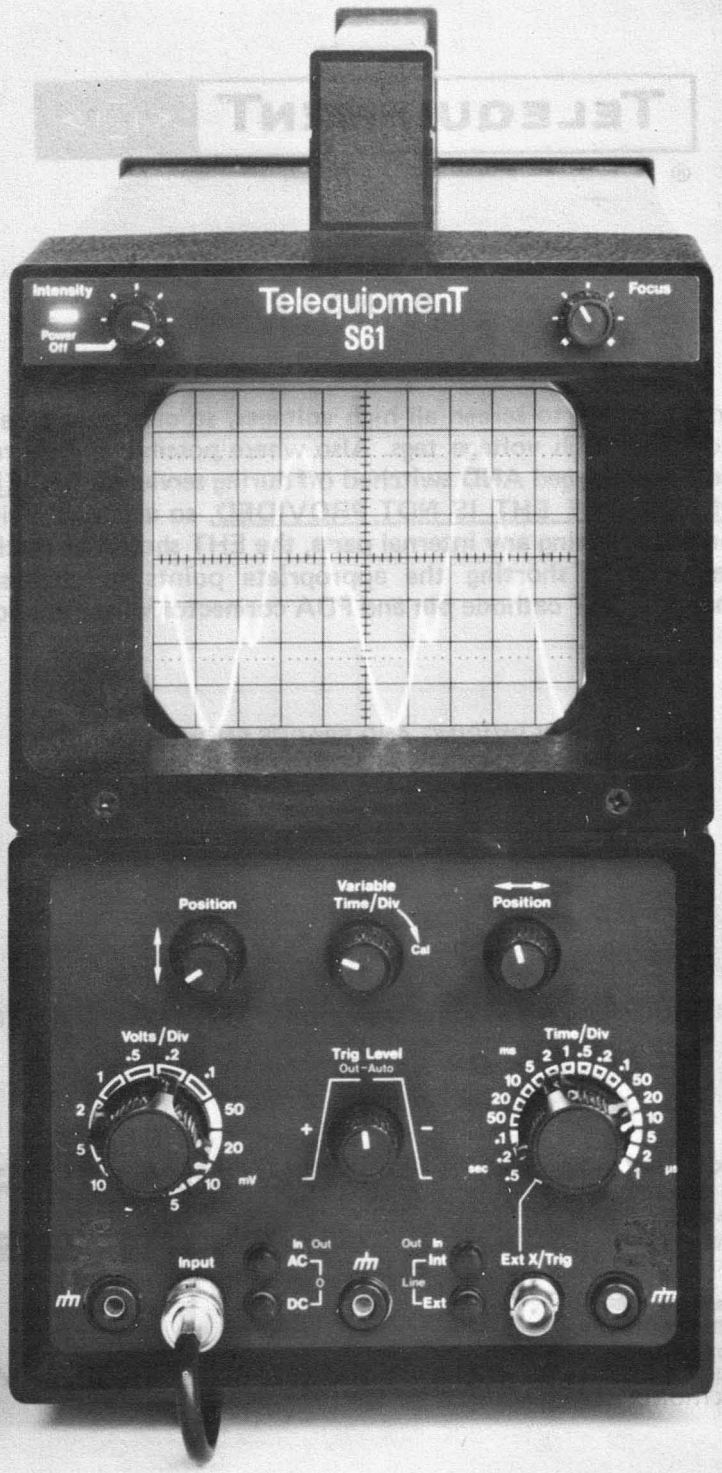

INTRODUCTION

The S61 is a single trace solid state oscilloscope using FET input circuitry for minimum drift and fast stabilization time. A CRT with 8 cm x 10 cm scan provides a bright and clear display.

The design of this instrument is subject to continuous development and improvement, consequently this instrument may incorporate minor changes in detail from the information contained herein. This would, in the main, affect the Component List and Circuit Diagrams which are described on Amendment Lists issued at regular intervals between manual reprints. Any Amendment List appertaining to this manual is located in the pocket provided inside the cover.

WARNING

DO NOT ALLOW A BRIGHT STATIONARY SPOT TO REMAIN DISPLAYED ON THE SCREEN FOR LONG PERIODS, FOR EXAMPLE, WHEN THERE IS NO SIGNAL IN THE TRIGGERED CONDITION, OTHERWISE THE CRT PHOSPHOR COULD BE DAMAGED.

NOTICE TO OWNER

To obviate the risk of damage during transit and to facilitate packaging the owner is requested NOT to send the following items unless they are suspect, should this instrument be returned to TEKTRONIX for servicing.

Probe

Plug Assemblies

TELEQUIPMENT TYPE S61
OPERATING INSTRUCTIONS

To obtain a trace quickly and easily we suggest you try the following procedure.

1. Push AC-DC-O to AC.
2. Push EXT-INT-LINE to INT.
3. Pull the TRIG LEVEL control out.
4. Turn the ↕ (Vertical) and the ↔ (Horizontal) controls so that the white marks are in line with the centres of the direction arrows.
5. Turn the INTENSITY control fully clockwise and allow the instrument to warm up.

S61 – Betjeningsanvisning.

For å hjelpe Dem med førstegangsbruk av dette oscilloskop, anbefaler vi følgende fremgangsmåte:

1. Trykk inn AC-DC-O til AC.
2. Trykk inn EXT-INT-LINE til INT.
3. Trekk ut TRIG LEVEL kontrollen.
4. Skru Vertical (↕) og Horizontal (↔) posisjonskontrollene slik at hvit-merkene peker mot senter av retningspilene.
5. Skru Intensity helt til høyre og la instrumentet varmes opp.

TELEQUIPMENT TYPE S61
BEDIENINGSVOORSCHRIFT

Om gemakkelijk en snel een beeld te krijgen s.v.p. de volgende procedure volgen.

1. Zet AC-DC-O op AC.
2. Zet EXT-INT-Line op INT.
3. Trek schakelaar TRIC LEVEL uit.
4. Zet de potmeters Horizontaal en verticaal zo dat de witte merktekens midden tussen de pijltjes staan.
5. Zet INTENSITEIT rechtsom en wacht tot het instrument opgewarmd is.

PLAQUETTE TELEQUIPMENT – MISE EN SERVICE
S61 – CONSEILS DE MISE EN SERVICE

Afin de faciliter la mise en service de cet oscilloscope, nous vous recommandons de procéder comme suit:

1. Pousser le commutateur AC-DC-O sur la position AC.
2. Pousser le commutateur 'EXT-INT-LINE' sur la position 'INT'.
3. Tirer la commande 'TRIG LEVEL'.
4. Placer les réglages de position (↔) et (↕) à mi-course (repères blancs orientés vers le centre des flèches).
5. Tourner la commande 'INTENSITY' à fond vers la droite (intensité maximale) et laisser chauffer l'appareil.

S61 BEDIENUNGSKARTE

Diese Bedienungskarte soll bei der Inbetriebnahme des Gerätes eine kleine Hilfestellung geben. Beachten Sie bitte die folgenden Punkte:

1. Schalten Sie AC-DC-O auf AC.
2. Schalten Sie EXT-INT-LINE auf INT.
3. Ziehen Sie TRIG LEVEL.
4. Stellen Sie die ↔ horizontalen und ↕ vertikalen Lageeinsteller so ein, dass sich die weissen Markierungsstriche in der Mitte der Richtungspfeile befinden.
5. Wählen Sie die höchste Helligkeit (INTENSITY auf Rechtsanschlag) und warten Sie, bis das Gerät aufgewärmt ist.

TELEQUIPMENT Modello S61
Istruzioni per l'uso

Per ottenere una traccia rapidamente e facilmente Vi consigliamo di seguire la seguente procedura:

1. Premere il comando AC-DC-O in AC.
2. Premere il comando EXT-INT-LINE in INT.
3. Tirare il comando TRIG LEVEL.
4. Ruotare i comandi per la posizione verticale (↕) ed orizzontale (↔) in modo che i riferimenti bianchi corrispondano al centro delle due frecce.
5. Ruotare il comando INTENSITY completamente in senso orario e lasciare che lo strumento si riscaldi.

S61 HANDLEDNING

För att hjälpa Er när Ni första gången ska använda Ert oscilloskop föreslår vi att Ni följer nedanstående punkter.

1. Tryck in knappen AC för funktionen AC-DC-O.
2. Tryck in knappen INT för funktionen EXT-INT-LINE
3. Drag ut ratten för TRIG LEVEL.
4. Vrid rattarna för vertikala och horisontala positionerna så att den vita markeringen är uppåt.
5. Vrid ratten INTENSITY max medurs och låt instrumentet värmas upp.

S61
STARTINSTRUKTION:

For at lette forståelsen og første start af instrumentet, anbefaler vi nedenstående procedure:

1. Indtryk AC/DC/O til AC.
2. Indtryk EXT/INT/LINE til INT.
3. Træk TRIG LEVEL kontrollen ud.
4. Drej VERTIKAL og HORISONTAL kontrollerne, således at de hvide mærker står ud for mellemrummet imellem de retningsvisende pile.

INSTRUCCIONES DE MANEJO DEL OSCILOSCOPIO TELEQUIPMENT MODELO S61

Para obtener un trazo rápida y fácilmente, sugerimos se proceda de la siguiente forma:

1. Desplazar el conmutador AC-DC-O a la posición AC.
2. Desplazar el conmutador EXT-INT-LINE a la posición INT.
3. Tirar hacia fuera el control "TRIG LEVEL".
4. Mover el desplazamiento vertical y horizontal hasta que las marcas blancas estén a mitad de recorrido de ambos potenciómetros.
5. Mover el control de intensidad completamente en el sentido de las agujas del reloj y dejar durante algunos segundos el instrumento antes de operar.

TELEQUIPMENT S61
INSTRUÇÕES DE OPERAÇÃO

Para obter com facilidade e rapidez o traço no osciloscópio sugerimos o seguinte procedimento:

1. Carregue no AC-DC-O para AC.
2. Carregue no EXT-INT-LINE para INT.
3. Puxe o controle TRIG LEVEL.
4. Rode os controles vertical (↕) e horizontal (↔) de modo a que as marcas brancas fiquem na direcção das setas.

6. Sentrer strålen med Vertical (↕) og Horizontal (↔) kontrollene.
7. Juster Intensity og Focus-kontrollene slik at De får en fokusert stråle med passende intensitet.
8. Juster Trace Rotate slik at strålen blir horisontal.
9. Kople til et signal til vertikal inngangen. Velg en passende følsomhet Volts/div. og tidsbase Time/div., slik at De får en kurve som står stille og som har passende høyde og bredde.

6. Centralise trace with the ↕ (Vertical) and ↔ (Horizontal) position controls.
7. Adjust INTENSITY and FOCUS to obtain a well defined line of suitable intensity.
8. Adjust the TRACE ROTATE for a horizontal line.
9. Connect an input signal to vertical input. Switch VOLTS/DIV and TIME/DIV switches to give a locked display of a convenient signal amplitude and period.

6. Centrer la trace à l'aide des réglages de position (↔) et (↕).
7. Régler les commandes d'intensité ('INTENSITY') et de focalisation ('FOCUS') pour obtenir une représentation satisfaisante.
8. Régler l'alignement horizontal de la trace à l'aide de la commande 'TRACE ROTATE'.
9. Connecter un signal à la voie de déflexion verticale et choisir le facteur de defléxion (VOLTS/DIV) et la vitesse de balayage (TIME/DIV) permettant d'obtenir une représentation stable d'amplitude et de période satisfaisantes.

6. Zet de tijd-as in het midden met de Horizontale en Verticale positie knoppen.
7. Zet INTENSITEIT en FOCUS instelling voor een heldere goed gefocuseerde lijn.
8. Zet "TRACE ROTATE" zo dat de lijn parallel is met het raster.
9. Verbind het te meten signaal met de verticale input en zet de VOLTS/DIV en TIME/DIV voor een gemakkelijk afleesbaar signaal in hoogte en breedte.

6. Centrare la traccia con i comandi verticale (↕) ed orizzontale (↔).
7. Regolare l'INTENSITY ed il FOCUS per ottenere una traccia focalizzata della voluta intensità.
8. Regolare il TRACE ROTATE per allineare la traccia con le linee del reticolo.
9. Collegare un segnale all'ingresso verticale. Seegliere le appropriate posizioni dei comandi VOLTS/DIV e TIME/DIV per ottenere una traccia della voluta ampiezza e durata.

6. Bringen Sie den Strahl mit Hilfe der Lageeinsteller ins Zentrum des Rasters.
7. Stellen Sie mit Hilfe der Bedienungselemente INTENSITY und FOCUS einen gut fokussierten Ablenkstrahl mit ausreichender Helligkeit ein.
8. Benutzen Sie, falls notwendig, das Justierelement TRACE ROTATE dazu, die Strahlspur parallel zu den horizotnalen Rasterlinien auszurichten.
9. Schliessen Sie ein Signal an den vertikalen Eingang und wählen Sie mit Hilfe der Stufenschalter VOLTS/DIV und TIME/DIV den entsprechenden Spannungs- und Zeitbereich.

5. Drej INTENSITY kontrollen helt højre om, og lad instrumentet varme op (30-60 sekunder).
6. Midtstil sporet med VERTIKAL og HORISONTAL positionskontrollerne.
7. Juster INTENSITY og FOCUS til en skarp strale med passende intensitet.
8. Juster TRACE ROTATE til et vandret spor.
9. Tilslut et indgangssignal til vertikal-indgangen. Stil VOLT/DIV. til passende signalstørrelse og TIME/DIV. til passende bredde på signalet.

6. Centrera strålen på bildskärmen med vertikala och horisontala positions-rattarna.
7. Justera ljusstyrkan och skärpan i strålen med rattarna INTENSITY coh FOCUS till lämpligt värde.
8. Justera med ratten TRACE ROTATE så att strålen blir parallell med rutnätet.
9. Anslut signalen som ska mätas till ingången och ställ in storleken på signalen med omkopplaren VOLTS/DIV samt sveptiden med omkopplaren TIME/DIV.

5. Rode o controle INTENSITY no sentido dos ponteiros do relógio e espere que o equipamento aqueça.
6. Centralize o traço com os controles vertical (↕) e horizontal (↔).
7. Ajuste os comandos INTENSITY e FOCUS de modo a obter uma linha bem focada e com intendidade desejada.
8. Ajuste o TRACE ROTATE para quero traço fique horizontal.
9. Ligue um sinal de entrada à entrada vertical. Comute os VOLTS/DIV e TIME/DIV de forma a obter o sinal com amplitude e período desejado.

6. Centrar el trazo con los controles de desplazamiento vertical y horizontal.
7. Ajustar "INTENSITY y FOCUS" para obtener una buena definición de la línea con una moderada intensidad de brillo.
8. Ajustar la alineación horizontal del trazo "TRACE ROTATE" para que coincida con las líneas horizontales de la gratícula.
9. Conectar una señal a la entrada vertical y seleccionar apropiadamente las posiciones VOLT/DIV y TIME/DIV, para obtener un trazo fijo de amplitud y periodo convenientes.

CONTENTS

SECTION		Page
1	SPECIFICATION	
	Cathode Ray Tube (CRT)	1/1
	Cooling	1/2
	Horizontal Deflection	
	External Horizontal Amplifier	1/1
	Sweep Rates	1/1
	Power Supply	
	Consumption	1/2
	Supply Frequency	1/2
	Supply Voltages	1/2
	Size	1/2
	Temperature Limits	1/2
	Trigger	
	Coupling	1/2
	Level	1/2
	Sensitivity	1/2
	Source	1/2
	Vertical Amplifier	
	Bandwidth	1/1
	Deflection Factor	1/1
2	OPERATING INSTRUCTIONS	
	Additional Facilities, Use of	
	Slope	2/2
	Trig Level	2/2
	Trigger Source	2/2
	Basic Applications	
	Correction Formula	2/4
	Frequency Measurement	2/3
	Instantaneous Voltage Measurement with Reference to a DC Voltage	2/3
	Instantaneous Voltage Measurement with Reference To Ground	2/3
	Monitor Display, Use as	2/2
	Peak to Peak Voltage Measurement	2/2
	Rise Time Measurements	2/3
	Time Duration Measurements	2/3
	Voltage Measurement between Two Points on a Waveform	2/3
	First Time Operation	
	Setting the Controls	2/2
	Switch On	2/2
	Input and Output Sockets	
	Input	2/2
	Trig/Ext X	2/2
	Z Mod	2/2
	Operational Check	2/1
	Operation of Controls	
	CRT	2/1
	Horizontal	2/1
	Trig	2/1
	Vertical	2/1
3	CIRCUIT DESCRIPTION	
	Attenuator and Vertical Amplifier	3/1
	CRT Circuit and Power Supply	3/2
	Sweep Generator; Unblanking and Horizontal Amplifier Circuit	3/1
	Trigger Circuit	3/1
4	MAINTENANCE AND RE-CALIBRATION	
	Calibration Procedure	
	Initial Setting	4/1
	Preset Brill Control and Astigmatism	4/1
	Trigger and Sweep	4/2
	Vertical Amplifier	4/1
	Introduction	
	General	4/1
	Tools and Equipment	4/1
	Mechanical	
	Access to Interior	4/1
	CRT Removal	4/1
	Re-Fitting CRT	4/1
5	COMPONENT LIST	
	Electrical Components	5/2
	Mechanical Parts	5/6
6	CIRCUIT DIAGRAMS	Figure
	Power Supply and CRT	5
	Sweep Generator; Unblanking and Horizontal Amplifier	3
	Time/Div Switch	4
	Trigger Amplifier	2
	Vertical Amplifier	1
	Pre-Set Controls diagram) at end of chapter	
	Printed Circuit boards) at end of chapter	

SECTION 1

SPECIFICATION

1.1 CATHODE RAY TUBE (CRT)

Display area	8 x 10 cm
Phosphor	
Standard	P31
Special Order	P7
Overall accelerating potential	2 kV

1.2 VERTICAL AMPLIFIER

Bandwidth (-3 db)	
DC coupled	DC - 5 MHz
AC coupled	2 Hz - 5 MHz
Risetime	⩽70 ns
Max. amplitude	8 div at low frequency decreasing to 5 div at 5 MHz
Deflection factors	
Calibrated (12 ranges 1, 2 & 5 sequence)	5 mV/div - 20 V/div ± 5%
Input impedance	1 MΩ and 35 pF in parallel
Maximum input	400 V peak

1.3 HORIZONTAL DEFLECTION

Sweep rates (18 ranges 1, 2 & 5 sequence)	500 ms - 1 μs/div ± 5%
A variable control provides overlap between ranges.	
External horizontal amplifier	
Bandwidth - 3 db	DC - 1 MHz (approximately)
Deflection factor	750 mV/div (approximately)
Input impedance	100 kΩ and 20 pF in parallel

1.4 TRIGGER

Level	Variable or Automatic. Bright base line provided in the absence of a signal.
Coupling	AC
Source	Internal, External Line. All positive or negative.

Sensitivity	
Internal	
40 Hz - 5 MHz	0.5 div minimum amplitude required
External	
20 Hz - 5 MHz	1V minimum amplitude required
Line	Triggers at power line frequency

1.5 POWER SUPPLY

Supply Voltages	The instrument will operate at any voltage in the ranges 95 - 130 volts or 190 - 260 volts
Supply frequency	48 - 400 Hz
Consumption	25 VA

1.6 SIZE

Height	280 mm
Width	160 mm
Depth	370 mm

1.7 WEIGHT

6 kg

1.8 COOLING

Convection

1.9 TEMPERATURE LIMITS, ambient

Operating	0 to +40° C
Non-operating	−25 to +70° C

SECTION 2

OPERATING INSTRUCTIONS

2.1 OPERATIONAL CHECK

2.1.1. GENERAL

Although this instrument is robust and is subjected to stringent checks before leaving our factory, it should be checked externally for possible damage. In the case of damage contact the carriers and your local Tektronix field office immediately.

Before switching the instrument on it is generally recommended that this section of the manual is read right through and that some time be spent in becoming familiar with the controls but experienced oscilloscope users might find the instructions in paragraph 2.4 rather laborious so it is left to the individual user to decide what to omit reading.

The S61 relies on convection cooling and care should be taken to see that external air circulation is not restricted.

2.1.2 SUPPLY VOLTAGE ADJUSTMENT

Before operating the instrument it is necessary to adjust for the available ac supply by means of the voltage selector *inside* the instrument.

Instructions for selection are shown diagramatically on the side cover.

Remove the rear cover by undoing and removing the three fixing screws and pulling the cover off.

On the right hand side vertical printed circuit board, between the power transformer and rear of the instrument is a two pin plug. This selects either the 95 - 130 volts or 190 - 260 volts tap on the transformer, and the adjacent slider switch selects the ± 10% tap. For voltages in the range 95 - 115 or 190 - 225 volts, select the Low position of the slide switch. For voltages in the range 115 - 130 volts or 225 - 260 volts select the High position of the slide switch. Refit the rear cover.

2.1.3 SUPPLY FUSE

The fuse holder is situated on the printed circuit board inside the rear cover and if it is necessary to change the supply tapping then the fuse should be checked for correct rating. For operation on 95 V - 130 V a 500 mA fuse should be fitted and on 190 V - 260 V the fuse should be 250 mA. To gain access to the fuse holder it is necessary to remove the rear cover (see paragraph 2.1.2).

BEFORE REMOVING THE REAR COVER DISCONNECT THE INSTRUMENT FROM THE SUPPLY.

2.1.4 SUPPLY CABLE (OR POWER CORD)

One of two types of supply cable will be fitted to the instrument. For the American continent a lead with a moulded three pin plug will be supplied. For the rest of the world the three core lead has short tails left for connecting to a plug top suitable for connection to the local supply system. The cores of this cable are colour coded as follows:

LINE . . . . . .BROWN
NEUTRAL. . . . . BLUE
EARTH . . . . . .GREEN/YELLOW

FOR SAFETY REASONS IT IS IMPORTANT THAT THE EARTH WIRE IS CONNECTED AND IF AN EXTENSION LEAD IS USED IT IS ESSENTIAL THAT THERE IS EARTH CONTINUITY.

2.2 OPERATION OF CONTROLS

2.2.1 CRT

INTENSITY	Varies the display intensity. An instrument ON/OFF switch is fitted to this control.
FOCUS	Controls the display definition.
TRACE ROTATION	This control is fitted on the rear of the instrument. It allows the trace to be aligned with the horizontal graticule lines.

2.2.2 VERTICAL

VOLTS/DIVISION	Provides attenuation of the input signal in 12 calibrated steps.
POSITION	Moves the trace in the Y or vertical axis.
AC/DC/O	This selects the input coupling. In the AC position a capacitor is in series with the input, whilst in the DC position the signal is coupled directly to the attenuator. In the O position the input is disconnected and the amplifier input is connected to the signal low terminal. This allows a 0 V dc level to be established.

2.2.3 TRIG

This switch is used to select internal, external or a line source to provide a triggering pulse (see 2.2.4 below).

2.2.4 HORIZONTAL

TIME DIVISION	Selects the sweep speed, there being 18 calibrated steps in the range 500 ms/division to 1 μs/division.
POSITION	The X POSITION control when rotated moves the trace in an X or horizontal axis.
INT-EXT-LINE	Enables the sweep to be triggered either externally or internally or from the power line frequency.
TRIG LEVEL	The level control selects the voltage level of the input waveform at which the sweep starts. With the knob pulled out the AUTO position is selected. In this position the level control is disconnected. In the absence of an adequate trigger signal the sweep generator free runs providing a stable reference trace.
+ –	This switch allows triggering on the positive or negative slope of an input waveform.

2.3 INPUT AND OUTPUT SOCKETS

INPUT	This socket connects the input signal to the vertical amplifier.
TRIG/EXT X	The socket connects either an external triggering or EXT-X signal to the trigger or horizontal circuits, depending on the TIME/DIV switch position.
Z MOD	Situated on the rear panel and connected via an isolating capacitor to the cathode of the CRT. A negative going signal is necessary to intensify the trace with 10 V amplitude providing a good contrast. A positive going signal of similar amplitude will blank the trace.

2.4 FIRST TIME OPERATION

2.4.1 SETTING THE CONTROLS

Set the front panel controls as follows:—

INTENSITY	fully anti-clockwise – OFF
FOCUS	central
VOLTS/DIV	0.1 V
AC-DC-O	DC
VERTICAL POSITION	central
EXT/INT/LINE	INT.
TIME/DIV	1 ms
HORIZONTAL POSITION	central
TRIG LEVEL	out and +

Connect a 0.5 V signal to the input socket.

2.4.2 SWITCH ON

1. Switch on by turning the INTENSITY control clockwise.
2. Allow a short while for a trace to appear.
3. Centralise the trace using the X and Y position controls.
4. Adjust the INTENSITY control so that the trace is at a suitable viewing intensity.
5. Adjust the FOCUS control for the sharpest obtainable trace.
6. Adjust the Y POSITION control so that the lower edge of the trace is level with one of the three lower graticule lines.
7. Observe that the overall waveform occupies 5 full vertical divisions of the graticule.
8. Switch VOLTS/DIV switch to 0.2 V.
9. Observe now that the trace will only occupy 2½ vertical division of the graticule.
10. Switch AC-DC-O to O leaving only a reference trace, which can be aligned with the graticule lines by using the TRACE ROTATION control, at the rear of the instrument.
11. Switch AC-DC-O to DC.
12. By now the user will be conversant with the operation of the Y or vertical controls so now they should turn to the sweep controls. By turning the TIME/DIV control anti-clockwise in steps as far as it will go, it should be noticed that the sweep speed decreases.
13. Set the TIME/DIV knob to 1 ms and observe the number of cycles.
14. Set the TIME/DIV knob to 10 ms and note that more cycles of the waveform should be seen.

2.5 USE OF ADDITIONAL FACILITIES

2.5.1 TRIGGER SOURCE

We have been using the control in the INT position but it is possible to trigger from an external signal by plugging the signal into the TRIG/EXT X socket.
The EXT/INT/LINE switch should be set to EXT.

2.5.2 SLOPE (+ or –)

The + – switch allows triggering from a positive (+) going or negative (–) going portion of the trigger signal. This is important when it is only required to observe a portion of a waveform but where several cycles of a waveform are displayed the setting is often unimportant.

2.5.3 TRIG LEVEL

There are two modes of LEVEL control operation. In the normal (control IN) position the triggering point can be varied over the whole of the waveform to a maximum of 8 divisions for a symmetrical waveform.
In the AUTO position (control OUT) level control is disconnected and the time base free runs in the absence of a signal. It will automatically trigger when a signal is applied.

2.6 BASIC APPLICATIONS

The following are typical applications of oscilloscope type S61. Only outline procedures are given to allow the user to adapt the method to individual requirements. Familiarity with the controls of the instrument as outlined in 2.2, 2.3 and 2.4 should allow these basic techniques to be applied to a wide variety of uses.

2.6.1 USE AS A MONITOR OR DISPLAY

One of the most frequent uses of an oscilloscope is as a monitor or display. By correct adjustment of the X and Y controls it is possible to display many cycles or a fraction of one cycle of a repetitive waveform. Generally it is desirable to limit the display to the centre 6 divisions vertically and in the case of a repetitive waveform to display 1 to 8 cycles within the centre 8 divisions horizontally. It is possible to use the S61 instrument in this way to inspect a waveform for slope, over or undershoot and ringing.

2.6.2 PEAK TO PEAK VOLTAGE MEASUREMENT

AC – Symmetrical waveform

1. Connect the waveform to be measured to the INPUT.
2. Set the VOLTS/DIV switch to display about 5 or 6 divisions of the waveform.
3. Set the AC-DC-O switch to AC.
4. Set the TIME/DIV switch to display several cycles of the waveform.
5. Use the Y POSITION control to set the lower edge of the waveform on one of the lower graticule lines so that the top edge of the waveform is in the graticule area.
6. Measure the vertical amplitude (div) of the signal on the screen.
7. Multiply the amplitude in 6 above by the VOLTS/DIV setting and by the attenuation factor of any probe used.

EXAMPLE

Assume a vertical deflection of 5.3 divisions using a X10 attenuation probe and a VOLTS/DIV setting of 0.05 Volts per division.

∴ Peak to Peak Voltage =

Vertical Deflection X VOLTS/DIV (Setting) X Attenuator Factor (probe)

for our example

Peak to Peak voltage = 5.3 X 0.05 X 10

∴ Peak to Peak voltage = 2.65 Volts.

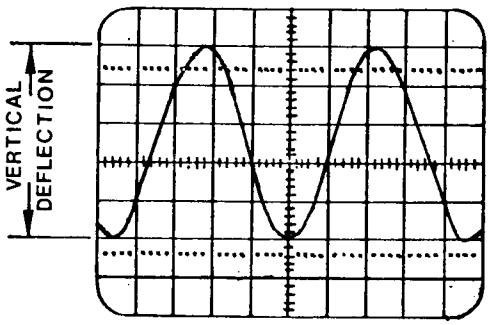

Measuring Peak to Peak Voltage of a Waveform

2.6.3 VOLTAGE MEASUREMENT BETWEEN TWO POINTS ON A WAVEFORM

Proceed as in 2.6.2 above substituting the two measurement points for the peaks and setting the lower point on one of the lower graticule lines.

2.6.4 INSTANTANEOUS VOLTAGE MEASUREMENT WITH REFERENCE TO GROUND

To make a measurement of the DC level at a specified point on a waveform use the following procedure.

1. Set the AC/DC/O switch of the selected channel to DC.
2. Set the EXT/INT/LINE switch to INT.
3. Pull the TRIG LEVEL control out to the AUTO position.
4. Connect the waveform to be measured to the INPUT.
5. Establish the polarity of the measured voltage. If the measurement point is above the reference line the voltage is positive. If the measurement point is under the reference line it is negative.
6. If the waveform is repetitive use the TIME/DIV and X POSITION (↔) controls to display at least one cycle.
7. Switch the AC/DC/O switch to O.
8. Set the trace to the lowest graticule line or other suitable reference line, using the Y POSITION control, if the point to be measured is positive. Set to highest or other suitable graticule line if the point to be measured is negative. AFTER THIS DO NOT ADJUST THE Y POSITION CONTROL.
9. Set AC/DC/O switch to DC.
10. Measure the distance in divisions from the reference line to the point to be measured.
11. Multiply the measurement in (10) above by the VOLTS/DIV switch setting and any probe attenuation factor.

EXAMPLE

Assume that the vertical distance measured is +2.7 divisions with a VOLTS/DIV setting of 200 mV and the probe attenuation factor is X1

∴ Instantaneous voltage =

Vertical distance (divisions)	X	Polarity	X	VOLTS/DIV (Setting)	X	Probe Attenuator factor

For the values given
Instantaneous voltage = 2.7 x 1 x 0.2 x 1

∴ Instantaneous Voltage = 0.54 Volts

2.6.5 INSTANTANEOUS VOLTAGE MEASUREMENT WITH REFERENCE TO A DC VOLTAGE

Proceed as in 2.6.4 but in step (6) set the input switch to DC and feed in the reference voltage to the input. Step 8 will be to remove the reference voltage.

2.6.6 TIME DURATION MEASUREMENT

1. Connect the waveform to be measured.
2. Set the VOLTS/DIV switch to display a suitable vertical amplitude of the waveform.
3. Set the TIME/DIV and Level controls to display the appropriate portion of the waveform to be measured over the maximum number of horizontal graticule divisions possible, keeping well inside the graticule limits.
4. Use the Y POSITION control to move the trace so that the measurement points are on the horizontal centre line.
5. The X POSITION control is used to move the start of the measurement period to a convenient reference point.
6. Measure the distance (divs) between the measurement points.
7. Multiply the measurement in 6 above by the setting of the TIME/DIV switch.

EXAMPLE

If the distance between the points is 2.5 divisions with the TIME/DIV control on 0.2 ms/div

Time duration	=	horizontal distance (divisions)	X	TIME/DIV setting

∴ Time duration = 2.5 x 0.2 ms

∴ Time duration = 0.5 ms

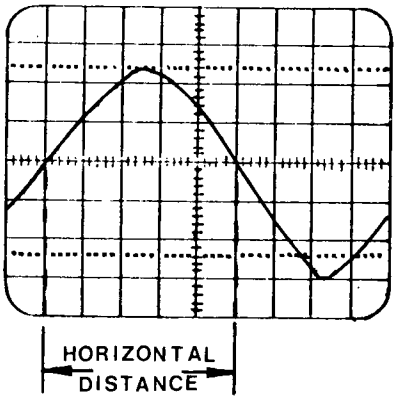

Measuring the Time Duration between points on a Waveform

2.6.7 FREQUENCY MEASUREMENT

The time duration technique shown in 2.6.6 can be used to establish the frequency of a periodically recurrent waveform. The start of two adjacent cycles is taken as the measurement points and the time duration between these points established. The frequency is the reciprocal of the time duration.

EXAMPLE

If one cycle occupies 5 divisions with the time division control on 0.2 ms/div

Time Duration	=	Horizontal Distance	X	TIME/DIV (setting)

for the example

Time duration = 5 x 0.2 ms

= 1.0 ms

Frequency $= \frac{1}{\text{Time duration}}$

$= \frac{1}{1.0 \times 10^{-3}}$

= 1 kHz

2.6.8 RISE TIME MEASUREMENTS

Rise time measurements employ the same basic techniques as time duration measurements. Rise time t is the time required by the leading edge of a waveform to rise from 10% to 90% of the waveform amplitude. The procedure is as follows:—

1. Connect the waveform to either input.
2. Set the AC/DC/O switch to AC.
3. Set the VOLTS/DIV switch to display 4 to 8 divisions amplitude.
4. Centre the display about the centre horizontal line.
5. Set the trigger controls to obtain a stable display.

6. Set the TIME/DIV switch so that the 10% and 90% points of the waveform lie within the centre 8 divisions horizontally.
7. Determine the 10% point of the waveform and use the X and Y position controls to set this point to a convenient graticule point.
8. Determine the 90% point and estimate the horizontal distance in graticule divisions between the 10% and 90% points of the waveform.
9. Multiply the distance obtained in (8) by the setting of the time divisions switch. If the result is close to the rise time of the instrument it is necessary to apply a correction factor (See below).

EXAMPLE

Assume that the horizontal distance between the 10% and 90% points is 5 divisions and the TIME/DIV switch is set to 100 ms

Rise time =

horizontal distance (divs) X TIME/DIV setting

for the example

Rise time = 5 x 100 μs

$\therefore$ Rise time = 500 μs

2.6.9 CORRECTION FORMULA FOR FAST RISE TIME WAVEFORMS

When the rise time of the oscilloscope is of the same order as the rise time of the waveform being measured it is necessary to apply a correction formula as follows :—

$$\text{Actual Rise time (tra)} = \sqrt{\left(\text{Measured Rise time (trm)}\right)^2 - \left(\text{Oscilloscope Rise time (tro)}\right)^2}$$

EXAMPLE

Assume the rise time found by the method given in 2.6.8 is 500 ns. The oscilloscope rise time is approximately 70 ns applying

$$\text{Actual rise time} = \sqrt{(500)^2 - (70)^2}$$
$$= \sqrt{250{,}000 - 4900}$$
$$= \sqrt{245{,}100}$$
$$= 495 \text{ ns}$$

NOTE It should not be necessary to apply the correction to waveforms having a rise time greater than 300 ns. Also the quoted rise time is the maximum figure and the actual rise time could be considerably better than this. This would mean that a calculated rise time would be in error. If it is necessary to work to great accuracy it would be necessary to measure the bandwidth of the instrument and calculate the rise time as follows :—

$$\text{Rise time} = \frac{0.350}{\text{Bandwidth (MHz)}} \text{ ns}$$

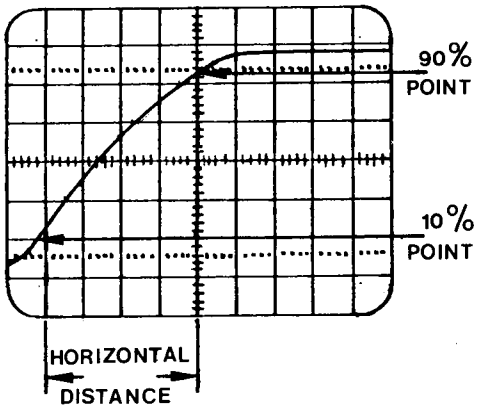

Measuring Rise Time

SECTION 3

CIRCUIT DESCRIPTION

3.1 ATTENUATOR AND VERTICAL AMPLIFIER (fig. 1)

The input signal is connected via C902 in the AC position to the attenuator (volts/div) switch S901. In the DC position, C902 is bypassed and in the O position S901 input is connected to the zero volt line.

A capacity compensated attenuator is switched by S901 in steps of 1000 : 1,100 : 10 : 1 and 1 : 1. The output at S902 is fed to the gate of TR601 via R602, C601 which together with D601 protect the input against overloads up to ±400 volts.

TR601 is a dual F.E.T. connected as a source follower. Stabilised + and − 7.5 volt lines are derived by zener diodes D602, D603 to supply the F.E.T. R604 adjusts the DC output of the source follower to a zero voltage level and the output connects to a voltage divider having ratios of 1 : 1, 2 : 1, 4 : 1. The divider is switched with the input attenuator to provide 5-10-20 ratios for the Volts/Div switch. R618 adjusts the stage gain, and R613 maintains a fairly constant output impedance to feed TR602 base. The output signal from the source follower is connected via the divider to a series-shunt long tailed pair, consisting of TR602, TR604 and TR603, TR605. The signal is taken to TR602. The DC shift voltage from R606 and the DC balance voltage from R603 connect to TR603. This stage gain is determined by the ratio of R619 and the emitter resistance of TR602, and is of the order of 40. The emitter resistance is determined by the current through TR602, TR603 and as the supply voltage varies the resistor value and hence overall gain varies. The variation of amplifier gain compensates for the CRT sensitivity which is inversely proportional to supply voltage and so the overall vertical sensitivity remains independent of supply voltage. The ratios of R619, R624 produce zero common mode gain, and assist in balancing out supply line signals. The low output impedances at TR604, TR605 collectors drive another series-shunt arrangement consisting of TR606 TR608 and TR607, TR609.

The low output impedance at TR608, TR609 collectors is used to drive the CRT vertical plates.

Compensation in the emitters of TR606 and TR607 by R627, R631 provides good temperature-gain stability and C612, C604, R633 provide H.F. peaking. Diodes D606 − D609 act as a clamp to prevent TR608, TR609 bottoming and running into hole storage. Also diodes D606 and D607 prevent TR606, TR607 becoming overvolted due to current cut off when D608, D609 stop conducting. This clamp potential is determined by R634 and R635 values. R638 prevents any excessive unbalance between the bases of TR608, TR609.

Trigger signals are taken from TR608 collector via C606, R643 to avoid capacity loading.

The emitters of TR608, TR609 are used to provide a stabilised +13 volts supply for the trigger and sweep circuits. TR610 is a shunt stabiliser and R646 connection to the −20 volt line provides mains voltage following. R644 is a current protection for TR610.

3.2 TRIGGER CIRCUIT (fig. 2)

The input trigger signal is received either internally, externally or at line frequency and is selected by S1. This signal is AC coupled via C1 into TR1 base.

The trigger amplifier consists of two shunt feedback stages in cascade, each with unity gain. The output signal is selected from either TR1 or TR2 collector and fed to the limiter stage TR7.

R12 and R16 adjust for equality of trigger setting when selecting +ve and −ve output.

The LEVEL control voltage is supplied by R4 and is current mixed through R3 into TR1 base.

R4 is a centre tapped potentiometer with both ends connected to +13 volts and the centre tap at 0 volts.

Switch S2 is mounted on R4 and in the AUTO mode it disconnects the +13 volt supply from R5 so stopping any LEVEL action.

In the AUTO mode there is an additional circuit connected in the feedback loop between TR1 collector and base appearing in parallel with the feedback path R9, C6.

This extra circuit consists of a peak to peak voltage detector C4, TR6, D1, D3, C2 and also a peak detector consisting of C5, D2, C3.

Into the base of TR1 is mixed the input signal together with a DC current through R1 and two currents through R5 and R6.

At D1 cathode the signal is proportional to the peak to peak value at TR1 collector. R5 and R7 provide a bias to compensate for the TR1 base current due to R1. This allows the mean level of a symmetrical peak to peak signal to be correctly set.

With a non symmetrical signal this mean level will be too great.

The peak detector voltage at D2 anode provides a voltage equal to half the mean level and this is in a direction which pushes the mean level down to its correct value.

The output from the phase splitter, TR1, TR2 is taken to the limiter stage TR7 and thence to a Schmitt trigger.

TR7 limits the input to the Schmitt and so allows the Schmitt circuit to count down at higher frequencies.

TR7 is an emitter follower and the limiting is effected by D4 disconnecting in the +ve direction and by lack of current in the −ve direction.

TR3, TR4 are connected in a Schmitt trigger arrangement and inductor L1 and R30 provides a clamped overshoot allowing adequate count down to occur. The output at TR4 collector is taken to the sweep trigger via C9. Also a bright line arrangement is provided by TR5.

In the LEVEL control mode TR5 base has no current supply and so no collector current flows. In the AUTO mode R28 is connected via S2 to the 13 volt supply so that TR5 collector is low.

When pulses occur at the Schmitt output, TR4 collector is connected via a peak to peak detector D6, D7. This provides a DC voltage which switches off TR5 so stopping the bright line circuit working.

3.3 SWEEP GENERATOR, UNBLANKING AND HORIZONTAL AMPLIFIER CIRCUIT (fig. 3)

The trigger output pulse is differentiated and clipped by C9 and diodes D53, D54. The positive going edge is applied to the bistable circuit TR53, TR54 and causes TR53 to conduct. The falling collector potential causes TR54 to conduct hard and switch off TR55. The rising edge at TR55 emitter aided by D52 is applied to the CRT and unblanks the trace. Diodes D63 and D62 prevent TR54 from bottoming. At the same time, the falling collector potential at TR53 is coupled through D59 and switches off TR51. This allows TR57, connected as a Miller integrator to commence to operate. The

drain rises, charging the timing capacitor directly and the hold off capacitor via emitter follower TR58 and D55. This rising voltage is applied through TR52 to TR56 base. Eventually TR56 switches on, causing TR53 collector to rise. This rise switches off TR54 and switches TR55 hard on, so blanking the CRT.
The rising collector voltage at TR53 also causes TR51 emitter to rise until eventually TR51 conducts and clamps TR57 gate. The flyback then starts and the timing capacitor discharges until D51 conducts and reduces the current in TR51 to the value required by the timing resistor. The flyback then stops. The hold off capacitor finishes discharging through R74 and R75.
The sweep generator is then ready to be re-triggered.
In the absence of a trigger signal and in the AUTO mode, the bright line circuit operates. TR5 is saturated with its collector voltage low, so switching off D56. This allows the falling emitter potential of TR57 at the end of the flyback to be coupled through to TR56 base, so switching TR53 on allowing the sweep to re-start. Hence the sweep will continuously free run until an input signal causes TR5 to switch off, causing D56 to conduct and so preventing the sweep from re-cycling. The sweep output from TR58 emitter is connected to the horizontal amplifier via the TIME/DIV switch. The horizontal amplifier consists of a shunt feedback stage TR59 driving a long tailed pair TR61, TR62 feeding the CRT deflector plates.
The sweep and shift voltage are current mixed at TR59 base and D57, D58 at TR61 collector acts as a catching clamp preventing TR61 from bottoming. R92 in the emitters sets the stage gain and hence the timing.

3.4 CRT CIRCUIT AND POWER SUPPLY (fig.5)

The supply voltage is fed via the power ON/OFF switch, fuse FS401 and switch S402 to select the appropriate tapping on T401.
A positive 180 volt line is obtained from a bridge rectifier D401–D404, resevoir capacitor C401 and smoothed by R404, C409.
A minus 20 volts supply is obtained from the full wave rectifier D405, D406 and resevoir capacitor C402 and smoothed by R405, C411.
The negative supply to the CRT is obtained by a full wave doubler circuit, D407, D408 and C403–C408.
Additional smoothing is provided by R406, C300.
The grid voltage for the CRT is derived from a zener diode D302 connected between the CRT cathode and the –2 kV supply. The voltage is varied by the intensity control R312.
Unblanking signals are capacity coupled through C301 to the CRT grid and DC restored by D301. During the positive excursion of the unblanking pulse, D301 conducts and maintains the grid potential at a level set by R306.
During the negative, blanked period, the diode is non conducting and C301 discharges through R305 and the negative supply.
The trace intensity may be varied by negative going signals fed into the CRT cathode.

SECTION 4

MAINTENANCE AND RE-CALIBRATION

Care must be taken not to touch high voltage tags. The instrument MUST BE UNPLUGGED when removing the case, removing or replacing the tube, or other components and where possible during other servicing.

4.1 INTRODUCTION

4.1.1 GENERAL

The solid state design of the instrument makes frequent adjustment of the internal preset components unnecessary. The appropriate part of the re-calibration procedure should be carried out, whenever the instrument fails to meet its specification, or whenever a defective component is replaced. Section 3 should be helpful in deciding which part of the circuit requires adjustment.

4.1.2 TOOLS AND EQUIPMENT

To carry out the whole calibration procedure, the following tools and equipment are required:—

Low capacitance trimming tool (for preset capacitors).
Small screwdriver (for preset potentiometers).
Time-mark Generator, providing markers of 1 ms and 1 μs Accuracy within 0.1%.
Squarewave Generator, providing outputs of 1 kHz and 10 kHz, 25 mV to 100 V.
Squarewave Generator, providing outputs of 10 kHz, 100 kHz and 1 mHz with rise time less than 10 ns.
Coaxial cable and terminating resistor for the above.
Monitor Oscilloscope, complete with X10 passive probe.
Passive Probe, X10 attenuation, suitable for input capacities of 25 to 35 pF.
Test Meter, 20,000 Ω/volt or higher, accuracy within 2% 2.5 V DC to 2500 V DC.
Sinewave Generator, 1 kHz, 10 kHz and 50 kHz.
Coaxial leads allowing the same signal to be connected to the oscilloscope.

4.2 MECHANICAL

4.2.1 ACCESS TO INTERIOR

NOTE: UNPLUG INSTRUMENT FROM SUPPLY BEFORE REMOVING COVERS.

The cabinet covers are removed as follows:—

1. The back cover is removed by undoing and removing the three fixing screws and pulling the cover off.
2. The lower side panels can then be slid backwards out of position. To re-fit the covers it is necessary to slide the lower covers into position taking care that the slot on the lower edge engages with the raised portion of the lower panel bezel, and that the lug at the top engaged. The rear cover should be slid into position and secured by the three screws.

4.2.2 CRT REMOVAL

1. Disconnect the instrument from the ac supply.
2. Remove the covers as shown in 4.2.1 above.
3. Wait until LP402 (neon) on PC197 (component side) is extinguished, then short junction of D408 and C408 to chassis via a 1 MΩ resistor and keep the short in place for about 1 minute, to discharge any residual voltage. Failure to observe this procedure could cause damage to the circuitry.
4. Remove the INTENSITY and FOCUS knobs.
5. Remove the felt washers and the panel bearing the name TELEQUIPMENT.
6. Remove the 4 screws fixing the plastic bezel surrounding the tube face and pull off the bezel and graticule.
7. Slide off the black section of the upper case by moving forward.
8. Unhook the spring loaded strap on the right hand side of the CRT front.
9. Pull off the tube base at the rear of the tube using the loop provided.
10. Loosen the screws holding the clamps which fix the rear tube screen to the plastic mounding and slide these clamps off.
11. Slide the tube gently forward easing the mumetal screen past the lower support and chassis edge.
12. Slide the tube right out of the instrument.

4.2.3 RE-FITTING CRT

The procedure for re-fitting is the reverse of 4.2.2 above. Care must be taken in easing the mumetal screen past the chassis edge.

4.3 CALIBRATION PROCEDURE

4.3.1 INITIAL SETTING

1. Remove side covers reference Para 4.2.1. Connect to a suitable A.C. power source and switch the instrument on.
2. Set the front panel controls as follows:—

AC-DC-O	O
VOLTS/DIV	20 mV
VERTICAL POSITION	Mid-position
TIME/DIV	1 ms
HORIZONTAL POSITION	Mid-position
TRIG LEVEL	out (AUTO) and +
EXT/INT/LINE	EXT
FOCUS)	Adjust for well defined
INTENSITY)	low brilliance trace.

3. Switch on and turn INTENSITY fully clockwise, if trace does not appear on screen adjust R306 (Preset Brill Control) to obtain trace.
4. Adjust INTENSITY and FOCUS for well defined low brilliance trace.

4.3.2 PRESET BRILL CONTROL AND ASTIGMATISM (R306 and R308)

1. Set TIME/DIV to 0.1 s, EXT-INT-LINE switch to LINE and INTENSITY fully clockwise. Adjust R306 so that no flyback can be seen at full brilliance.
2. Set TIME/DIV to 100 μs and EXT-INT-LINE switch to INT. Adjust INTENSITY and FOCUS for well defined low brilliance trace. Display a 10 kHz sinewave at approximately 6 divs vertical amplitude and adjust FOCUS and R308 for best definition of display.

4.3.3 VERTICAL AMPLIFIER

4.3.3.1 VERTICAL GAIN (R618)

1. Select EXT-INT-LINE switch to INT, AC-DC-O to DC and set VOLTS/DIV to 5 mV.
2. Feed a 25 mV pp 1 kHz squarewave into the vertical input and adjust R618 to give two lines 5 divs apart.

4.3.3.2 POSITION AND VOLTS/DIV BALANCE (R603 and R604)

1. Set AC-DC-O to OV and vertical POSITION control to mid-trace.
2. Set VOLTS/DIV to 20mV and centre trace with R603.
3. Turn to 50mV and centre trace with R604.
4. Switch between 20mV and 50mV ranges adjusting R603 and R604 to eliminate vertical movement.

4.3.3.3 ATTENUATORS

1. Set VOLTS/DIV to 20mV range and centre trace with vertical POSITION control.
2. Turn to 50mV and centre trace with R604.
3. Switch between 20mV and 50mV ranges adjusting POSITION and R604 to eliminate vertical movement.

4.3.3.4 PULSE RESPONSE C604

1. Set VOLTS/DIV to 5mV.
2. Display a 100kHz squarewave signal of 5 divs amplitude. (Ensure that the coaxial cable connecting the signal to the instrument is correctly terminated).
3. Adjust C906 for the best response (square corner without overshoot or undershoot).
4. Set attenuator to 0.5 VOLTS/DIV and increase the amplitude of the squarewave to 2.5V.
5. Adjust C909 for the best response.
6. Set attenuator to 5 VOLTS/DIV and increase the amplitude of the squarewave to 25 volts.
   Adjust C912 for best response.
7. Disconnect the squarewave signal.
8. Connect a X10 passive probe to the input.
9. Set the VOLTS/DIV to 20mV.
10. Display a 1kHz squarewave of 1V amplitude via the probe.
11. Adjust the probe compensation for the best squarewave response.
12. Set the VOLTS/DIV to 50mV and increase the amplitude of the squarewave to 2.5 volts.
13. Without altering the probe compensation, adjust C903 for the best squarewave response.
14. Set VOLTS/DIV to 0.5 and increase the amplitude of the squarewave to 25V.
15. Adjust C907 for the best squarewave response.
16. Set the VOLTS/DIV to 5V and increase the amplitude of the squarewave to 100V.
17. Adjust C911 for the best squarewave response.
18. Disconnect the signal and probe.

4.3.3.5 PULSE RESPONSE C604

1. Set VOLTS/DIV to 5mV.
2. Display a 100kHz squarewave signal (Ensure that the coaxial cable connecting the signal to the instrument is correctly terminated).
3. Adjust C604 to optimise the squarewave response.
4. Disconnect the squarewave signal.

4.3.4 TRIGGER AND SWEEP

4.3.4.1 TRACE LENGTH (R57)

1. Set AC-DC-O to O, TIME/DIV to 1ms and pull out LEVEL. Adjust sweep length to 10.5 divisions with R57.

4.3.4.2 STABILITY (R33)

1. Display a 10kHz 25mVpp squarewave and adjust R33 until trace free runs. Note position of R33.
2. Rotate R33 until trace just disappears and once again note position of R33.

The correct setting for the STABILITY lies mid-way between the two noted positions.

4.3.4.3 TRIGGER AMPLIFIER SENSITIVITY (R12 and R16)

1. Pull out LEVEL and apply a 50Hz squarewave to give 0.5 div display.
2. Set TRIG LEVEL to negative slope (fully clockwise).
3. Adjust R12 so that the trace is triggered exactly half way up the leading edge of the applied signal.
4. Set TRIG LEVEL to positive slope (fully Anticlockwise).
5. Adjust R16 so that the trace is triggered exactly half way up the leading edge of the display. Disconnect signal.

4.3.4.4 1MS/DIV SWEEP ACCURACY (R92)

1. Set TIME/DIV to 1ms and display 1ms markers. Adjust R92 so that markers are exactly one major division apart over the centre 8 divisions.

4.3.4.5 2μs/DIV SWEEP ACCURACY (C59)

Set TIME/DIV to 2μs and display 2μs markers. Adjust C59 so that one marker occurs for each major division over the centre 8 divisions.

SECTION 5

COMPONENT LIST

All requests for repairs or replacement parts should be directed to the Tektronix Field Office or representative in your area. This procedure will assure you the fastest possible service. In the UK enquiries should be made to Harpenden.

Values of resistors are stated in ohms or multiples of ohms; ratings at 70°C are in watts or sub-multiples of watts. Values of capacitors are stated in sub-multiples of farads; ratings at 70°C are in volts or kilovolts.

Whenever possible, exact replacements for components should be used, although locally available alternatives may be satisfactory for standard components.

Any order for replacement parts should include:

1. Instrument type
2. Instrument serial number
3. Component circuit reference
4. Component part number
5. Component value

CIRCUIT REFERENCE BLOCKS

The table below gives the blocks of circuit references, so that the reader can relate the items listed in this section and their location in the circuitry and printed circuit boards in Section 6.

Circuit Reference		Circuit	Fig.
From	To		
1	200)	Trigger Amplifier	2
	200)	Sweep Generator; Unblanking & Horizontal Amplifier	3
201	300	Time/Div Switch	4
301	400	CRT)	5
401	600	Power Supply)	
601	1000	Vertical Amplifier	1

ABBREVIATIONS

BM	Button mica	CMP	Cermet preset	PS	Polystyrene
C	Carbon	E	Electrolytic	Se	Selenium
CP	Carbon preset	Ge	Germanium	Si	Silicon
CV	Carbon variable	MF	Metal Film	SM	Silver mica
CER	Ceramic	MO	Metal Oxide	WW	Wire-wound
CT	Ceramic Trimmer	PC	Polycarbonate	WWP	Wire-wound preset
CM	Cermet thick film	PE	Polyester	WWV	Wire-wound variable
		PP	Polypropylene		

TEKTRONIX U.K. LIMITED

36 - 38 Coldharbour Lane, Harpenden, Hertfordshire, England

Telephone: Harpenden 63141 Telex: 25559.

CIR REF	PART NUMBER	VALUE F	DESCRIPTION TYPE	TOL %	RATING Volts	Eff. Ser. No.
C1	285-0772-00	100 n	PE	10	400	
C2	290-0787-00	4.7 µ	E		16	
C3	290-0787-00	4.7 µ	E		16	
C4	290-0787-00	4.7 µ	E		16	
C5	290-0787-00	4.7 µ	E		16	
C7	281-0678-00	3.0 p	CER	0.25 p	750	
C8	285-0854-00	100 p	PS	2.0 p	350	
C9	285-0854-00	100 p	PS	2.0 p	350	
C10	281-0710-00	10 n	CER		250	
C11	285-1014-00	1.0 µ	PC	20	63	
C12	285-1014-00	1.0 µ	PC	20	63	
C13	281-0710-00	10 µ	CER		250	
C14	285-0915-00	100 n	PE	20	100	
C15	290-0497-00	100 µ	E		16	
C51	281-0710-00	10 n	CER		250	
C52	285-0838-00	75 p	PS	2 p	350	
C53	281-0710-00	10 n	CER		250	
C54	285-0854-00	100 p	PS	2 p	350	
C55	285-0874-00	470 p	PS	5	125	
C58	285-0915-00	100 n	PE	20	100	
C59	281-0155-00	2-22 p			500	
C65	285-0988-00	18 p	PS	1 p	350	
C66	281-0745-00	4.7 µ	CER	0.5 p	500	
C68	285-0845-00	68 p	PS	2 p	350	
C71	285-0940-00	12 p	PS	1 p	350	
C72	281-0710-00	10 n	CER		250	
						685651
C74	285-1054-00	270p	PS	1	350	685651
C75	285-0872-00	180p	PS	2	350	685651
C201	285-0943-00	1.0 µ	PC	1	63	
C202	285-1146-00	10 n	PS	1	63	686451
C203	285-0990-00	1.0 µ	PE	20	160	
C204	285-0790-00	10 n	PE	20	125	
C205	285-0870-00	120 p	PS	2	350	
C206	285-0870-00	120 p	PS	2	350	
C208	281-0802-00	6p8	CER	0.5	400	685351
C300	281-0807-00	10 n	CER		3 k	

CIR REF	PART NUMBER	VALUE F	DESCRIPTION TYPE	TOL %	RATING Volts	Eff. Ser. No.
C301	281-0807-00	10 n	CER		3 k	
C302	285-0915-00	100 n	PE	20	100	
C303	281-0710-00	10 n	CER		250	
C304	281-0807-00	10 n	CER		3 k	
C305	285-0874-00	470 p	CER	5	125 mV	685251
C306	281-0748-00	1 n		5	1250	686390
C401	290-0793-00	150 µ	E		50	
C402	290-0498-00	1 m	E	25	25	
C403	290-0540-00	15 µ	E		450	
C404	290-0540-00	15 µ	E		450	
C405	290-0540-00	15 µ	E		450	
C406	290-0540-00	15 µ	E	450	450	
C407	290-0540-00	15 µ	E		450	
C408	290-0540-00	15 µ	E		450	
C409	290-0793-00	150 µ	E		50	
C410	285-0853-00	470 n	PE	20	400	
C411	290-0498-00	1 m	E		25	
C601	285-1058-00	10 n	PE	20	400	
C602	281-0713-00	10 p	CER	0.25 p	750	
C603	285-0915-00	100 n	PE	20	100	
C604	281-0229-00	9.0-60 p	PP		100	
C605	281-0705-00	1p0	CER	0.1 p	400	
C606	290-0661-00	100 µ	E		16	
C607	281-0710-00	10 n	CER		250	
						685851
C609	281-0710-00	10 n	CER		250	
C610	285-0773-00	100 n	PE	20	400	
C611	285-0915-00	100	PE	20	100	
C612	285-0869-00	47 p	PS		350	
C613	285-0759-00	2.2 n	PS	5	125	
C614	285-0759-00	2.2 n	PS	5	125	
C615	285-1017-00	10 n	PE	20	400	
C902	285-0772-00	100 n	PE	10	400	
C903	281-0232-00	3.5-22p	PPT		400	686451
C904	285-0842-00	15 p	PS	1.0 p	350	
C905	285-0854-00	100 p	PS	2.0 p	350	
C906	281-0229-00	9.0-60p	PP		100	
C907	281-0232-00	3.5-22p	PPT		400	686451
C908	285-0920-00	56 p	PS	2	350	
C909	281-0229-00	9.0-60 p	PP		100	
C911	281-0232-00	3.5-22p	PPT		400	686451
C912	281-0232-00	3.5-22p	PPT		400	686451
C913	285-1058-00	10 n	PE	20	400	
C914	281-0802-00	6.8 p	CER	0.5	400	685251

CIR REF	PART NUMBER	VALUE	DESCRIPTION	TYPE	TOL %	RATING	Eff. Ser.No.
D1	152-0062-01		1N914/1N4148	Si			
D2	152-0062-01		1N914/1N4148	Si			
D3	152-0062-01		1N914/1N4148	Si			
D4	152-0062-01		1N914/1N4148	Si			
D6	152-0062-01		1N914/1N4148	Si			
D7	152-0062-01		1N914/1N4148	Si			
D8	152-0062-01		1N914/1N4148	Si			

CIR REF	PART NUMBER	VALUE	DESCRIPTION	TYPE	TOL %	RATING	Eff. Ser. No.
D51	152-0062-01		1N914	Si			
D52	152-0062-01		1N914	Si			
D53	152-0062-01		1N914	Si			
D54	152-0062-01		1N914	Si			
D55	152-0062-01		1N914	Si			
D56	152-0062-01		1N914	Si			
D57	152-0062-01		1N914	Si			
D58	152-0062-01		1N914	Si			
D59	152-0062-01		1N914	Si			
D61	152-0062-01		1N914	Si			
D62	152-0062-01		1N914	Si			
D63	152-0062-01		1N914	Si			
D64	152-0062-01		1N914	Si			
D201	152-0348-00		Zener		5	330	
D301	152-0062-01		1N914	Si			
D302	152-0432-00	62 V	Zener	Si	5		
D401	152-0341-00		G1R6	Si			
D402	152-0341-00		G1R6	Si			
D403	152-0341-00		G1R6	Si			
D404	152-0341-00		G1R6	Si			
D405	152-0566-00		SD2	Si			
D406	152-0566-00		SD2	Si			
D407	152-0567-00		DR300	Si			
D408	152-0567-00		DR300	Si			
D601	152-0483-00		CE1104	Si			
D602	152-0347-00	7.5 V	Zener	Si	5	330	
D603	152-0347-00	7.5 V	Zener	Si	5	330	
D604	152-0062-01	75 V	1N914/1N4148	Si			
D605	152-0062-01	75 V	1N914/1N4148	Si			685851
D608	152-0062-01	1	1N914/1N4148	Si			
D609	152-0062-01		1N914/1N4148	Si			
D611	152-0062-01	75 V	1N914/1N4198	Si			685851
FS401	159-0143-00	250 mA	Fuse Delay				
FS401	159-0144-00	500 mA	Fuse Delay				
L1	108-0482-00	160 μA					
LP401	150-0178-00						
LP402	150-0105-00						

CIR REF	PART NUMBER	VALUE Ohms	TYPE	TOL %	RATING W	Eff. Ser.No.
R1	317-0204-01	200 k	C	5	125 m	
R2	317-0331-01	330	C	5	125 m	
R3	317-0104-01	100 k	C	5	125 m	
R4	311-1952-00	22 k	CV	20	250 m	686451
R5	317-0564-01	560 k	C	5	125 m	
R6	317-0304-01	300 k	C	5	125 m	

CIR REF	PART NUMBER	VALUE Ohms	TYPE	TOL %	RATING W	Eff. Ser.No.
R7	317-0334-01	330 k	C	5	125 m	
R8	317-0103-01	10 k	C	5	125 m	
R9	317-0304-01	300 k	C	5	125 m	
R10	317-0272-01	2.7 k	C	5	125 m	
R11	317-0274-01	270 k	C	5	125 m	
R12	311-1514-00	220 k	CP	20	75 m	

CIR REF	PART NUMBER	VALUE Ohms	TYPE	TOL %	RATING W	Eff. Ser.No.
R13	301-0683-01	68 k	C	5	500 m	
R14	317-0304-01	300 k	C	5	125 m	
R15	317-0824-01	820 k	C	5	125 m	
R16	311-1517-00	470 k	CP	20	75 m	
R17	317-0103-01	10 k	C	5	125 m	
R18	317-0304-01	300 k	C	5	125 m	
R19	301-0683-01	68 k	C	5	500 m	
R20	317-0472-01	4.7 k	C	5	125 m	
R21	317-0271-01	270	C	5	125 m	
R22	317-0103-01	10 k	C	5	125 m	
R23	317-0682-01	6.8 k	C	5	125 m	
R24	317-0512-01	5.1 k	C	5	125 m	
R25	317-0181-01	180	C	5	125 m	
R26	317-0681-01	680	C	5	125 m	
R27	217-0223-01	22 k	C	5	125 m	
R28	317-0155-01	1.5 M	C	10	125 m	
R29	317-0223-01	22 k	C	5	125 m	
R30	317-0152-01	1.5 k	C	5	125 m	
R31	317-0273-01	27 k	C	5	125 m	
R32	317-0223-01	22 k	C	5	125 m	
R33	311-1512-00	22 k	CP	20	75 m	
R34	317-0432-01	4.3 k	C	5	125 m	
R35	317-0822-01	8.2 k	C	5	125 m	
R51	317-0563-01	56 k	C	5	125 m	
R52	317-0103-01	10 k	C	5	125 m	
R53	321-1392-48	120 k	MF	1	125 m	
R54	325-0243-00	261 k	MF	1	250 m	
R55	317-0333-01	33 k	C	5	125 m	
R56	317-0103-01	10 k	C	5	125 m	
R57	311-1512-00	22 k	CP	20	75 m	685251
R58	317-0273-01	27 k	C	5	125 m	
R59	317-0433-01	43 k	C	5	125 m	685251
R60	317-0392-01	3.9 k	C	5	125 m	
R61	317-0104-01	100 k	C	5	125 m	
R62	317-0102-01	1.0 k	C	5	125 m	
R63	315-0562-02	5.6 k	C	5	250 m	
R64	317-0332-01	3.3 k	C	5	125 m	
R65	315-0562-02	5.6 k	C	5	250 m	
R66	307-0137-00	33 k	MO	5	1.5	685851
R67	317-0680-01	68	C	5	125 m	685851
R68	317-0472-01	4.7 k	C	5	125 m	685851
R69	317-0334-01	330 k	C	5	125 m	
R70	317-0101-01	100	C	5	125 m	
R71	317-0223-01	22 k	C	5	125 m	
R72	317-0152-01	1.5 k	C	5	125 m	
R73	317-0912-01	9.1 k	C	5	125 m	
R74	317-0824-01	820 k	C	5	125 m	
R75	317-0824-01	820 k	C	5	125 m	
R76	317-0104-01	100 k	C	5	125 m	
R77	317-0334-01	330 k	C	5	125 m	
R78	311-1907-00	100 k	CV	20	250 m	
R79	317-0104-01	100 k	C	5	125 m	
R80	311-1908-00	22 k	CV	20	250 m	
R81	315-0335-02	3.3 M	C	5	250 m	
R82	317-0224-01	220 k	C	5	125 m	
R83	317-0104-01	100 k	C	5	125 m	
R84	315-0124-01	120 k	C	5	250 m	
R85	317-0822-01	8.2 k	C	5	125 m	
R86	317-0822-01	8.2 k	C	5	125 m	
R87	317-0393-01	39 k	C	5	125 m	
R88	307-0226-00	22 k	MO	5	1.5	
R89	317-0472-01	4.7 k	C	5	125 m	
R91	317-0122-01	1.2 k	C	5	125 m	
R92	311-1507-00	1.0 k	CP	20	75 m	
R93	307-0226-00	22 k	MO	5	1.5	
R94	317-0392-01	3.9 k	C	5	125 m	
R95	317-0220-01	22	C	5	125 m	
R96	317-0220-01	22	C	5	125 m	
R97	301-0102-01	1 k	C	5	500 mW	685251

CIR REF	PART NUMBER	VALUE Ohms	TYPE	TOL %	RATING W	Eff. Ser.No.
R201	325-0230-00	82.5 k	MF	1	250 m	
R202	325-0228-00	249 k	MF	1	250 m	
R203	325-0226-00	412 k	MF	1	250 m	
R204	325-0224-00	825 k	MF	1	250 m	
R205	325-0222-00	2.49 M	MF	1	250 m	
R207	321-0385-48	100 k	MF	1	125 m	
R208	321-0385-48	100 k	MF	1	125 m	685351
R301	315-0105-02	1.0 M	C	5	250 m	
R302	315-0105-02	1.0 M	C	5	250 m	
R303	315-0513-02	51 k	C	5	250 m	685851
R304	307-0529-00	10 M	CM	5	500 m	686051
R305	307-0529-00	10 M	C	10	250 m	686051
R306	311-0910-00	2.2 M	CP	20	250 m	
R307	315-0363-01	36 k	C	5	250 m	E635851
R308	311-1825-00	100 k	CP	20	250 m	
R309	315-0514-01	510 k	C	5	125 m	686051
R310	317-0203-01	20 k	C	5	125 m	
R311	311-1347-01	2.5 M	CV	20	250 m	
R312	311-1924-00	1.0 M	CV	20	2	
R313	315-0105-02	1.0 M	C	5	250 m	
R314	301-0102-01	1 k	C	5	500 mW	685251
R315	316-0106-01	10 M	C	10	250 m	656390
R401	315-0823-02	82 k	C	10	250 m	
R402	317-0684-01	680 k	C	5	125 m	
R403	317-0101-01	100	C	5	125 m	
R404	303-0151-01	150	C	5	1.0	
R405	307-0390-01	39	MO	5	1.5	
R406	316-0472-02	47 k	C	10	250 m	686390
R407	315-0105-02	1 M	C	5	250 m	
R408	307-0312-00	16 k	MO	5	1500	
R601	325-0200-00	1.0 M	MF	1	250 m	
R602	315-0224-02	220 k	C	5	250 m	
R603	311-1909-00	22 k	CP	20	75 m	
R604	311-1909-00	22 k	CP	20	75 m	
R605	317-0473-01	47 k	C	5	125 m	
R606	311-1818-00	22 k	CV	20	250 m	
R607	321-0193-48	1.0 k	MF	1	125 m	
R608	321-0164-48	499	MF	1	125 m	
R609	321-0164-48	499	MF	1	125 m	
R610	317-0222-01	2.2 k	C	5	125 m	
R611	317-0122-01	1.2 k	C	5	125 m	
R612	307-0137-01	18 k	C	5	1.0	
R613	317-0271-01	270	C	5	125 m	
R614	317-0561-01	560	C	5	125 m	
R615	317-0124-01	120 k	C	5	125 m	
R616	317-0184-01	180 k	C	5	125 m	
R617	317-0912-01	9.1 k	C	5	125 m	
R618	311-1910-00	2.2 k	CP	20	75 m	
R619	317-0202-01	2.0 k	C	5	125 m	
R620	317-0221-01	220	C	5	125 m	
R621	317-0202-01	2.0 k	C	5	125 m	
R622	301-0563-01	56 k	C	5	500 m	
R623	301-0563-01	56 k	C	5	500 m	
R624	317-0102-01	1.0 k	C	5	125 m	
R625	317-0112-01	1.1 k	C	5	125 m	685851
R626	317-0112-01	1.1 k	C	5	125 m	685851
R627	307-0258-00	130		20	500 m	
R628	315-0154-01	150 k	C	5	250 m	
R629	317-0201-01	200	C	5	125 m	
R631	317-0820-01	82	C	5	125 m	
R632	315-0154-01	150 k	C	5	250 m	
R633	317-0221-01	220	C	5	125 m	
R634	317-0303-01	30 k	C	5	125 m	
R635	317-0303-01	30 k	C	5	125 m	

CIR REF	PART NUMBER	VALUE Ohms	TYPE	TOL %	RATING W	Eff. Ser.No.
R636	303-0822-01	8.2 k	C	5	1.0	
R637	303-0822-01	8.2 k	C	5	1.0	
R638	317-0621-01	620	C	5	125 m	
R639	307-1053-00	7.5 k	MO	5	3.5	
R641	307-1053-00	7.5 k	MO	5	3.5	
R642	317-0101-01	100	C	5	125 m	
R643	317-0474-01	470 k	C	5	125 m	685251
R644	317-0221-01	220	C	5	125 m	
R645	317-0552-01	5.6 k	C	5	125 m	
R646	317-0912-01	9.1 k	C	5	125 m	
R647	317-0242-01	2.4 k	C	5	125 m	

CIR REF	PART NUMBER	VALUE Ohms	TYPE	TOL %	RATING W	Eff. Ser.No.
R648	317-0242-01	2.4 k	C	5	125 m	
R649	307-0427-01	2.2	C	5	125 m	
R651	317-0303-01	30 k	C	5	125 m	685851
R652	317-0303-01	30 k	C	5	125 m	
R901	325-0207-00	900 k	MF	1	250 m	
R902	325-0208-00	111 k	MF	1	250 m	
R903	325-0205-00	990 k	MF	1	250 m	
R904	325-0206-00	10.1 k	MF	1	250 m	
R905	325-0200-00	1.0 M	MF	1	250 m	
R906	321-0193-48	1.0 k	MF	1	125 m	

CIR REF	PART NUMBER	DESCRIPTION	Eff. Ser.No.
S1	260-1857-00	Push Button INT-EXT LINE	
S2	260-1429-00	AUTO Norm	
S3	with R4		
S201	260-1873-00	TIME/DIV	
S401	with R312	Power On	
S402	260-1429-00	High-Low Mains	
S901	260-1857-00	AC-DC-0	
S902	260-1847-00	VOLTS/DIV	

CIR REF	PART NUMBER	DESCRIPTION	Eff. Ser.No.
SK201	131-1654-00	BNC Female Bulk Hd.	
SK202	136-0542-00	4 mm	
SK301	136-0542-00	4 mm 'Z' MOD	
SK401	136-0295-00		
SK901	131-1654-00	BNC GEK35183	
SK902	136-0542-00	4 mm	
SK903	136-0542-00	4 mm	
T401	120-0993-00	Power	

CIR REF	PART NUMBER	DESCRIPTION		TYPE	Eff. Ser.No.
TR1	151-0317-01	BC239C	Si	NPN	
TR2	151-0317-01	BC239C	Si	NPN	
TR3	151-0242-00	2N3904	Si	NPN	
TR4	151-0242-00	2N3904	Si	NPN	
TR5	151-0326-01	BC237	Si	NPN	
TR6	151-0326-01	BC237	Si	NPN	
TR7	151-0326-01	BC237	Si	NPN	
TR51	151-0320-00	MPS6518	Si	PNP	
TR52	151-0317-00	BC239C	Si	NPN	
TR53	151-0317-01	BC239C	Si	NPN	
TR54	151-0320-01	MPS6518	Si	PNP	
TR55	151-0320-01	MPS6518	Si	PNP	
TR56	151-0317-01	BC239C	Si	NPN	
TR57	151-1076-00	FET WN 537	Si		685851
TR58	151-0326-00	BC107	Si	NPN	
TR59	151-0326-00	BC107	Si	NPN	

CIR REF	PART NUMBER	DESCRIPTION		TYPE	Eff. Ser.No.
TR61	151-0610-00	MPS-DO1	Si	NPN	
TR62	151-0610-00	MPS-DO1	Si	NPN	
TR601	151-1094-00	DUAL FET E412	Si	N Channel	
TR602	151-0317-00	BC109C	Si	NPN	
TR603	151-0317-00	BC109C	Si	NPN	
TR604	151-0326-00	BC107	Si	NPN	
TR605	151-0326-00	BC107	Si	NPN	
TR606	151-0326-00	BC107	Si	NPN	
TR607	151-0326-00	BC107	Si	NPN	
TR608	151-0525-00	FRB749	Si	NPN	
TR609	151-0525-00	FRB749	Si	NPN	
TR610	151-0326-00	BC107	Si	NPN	
V301	154-0736-00	CRT Brimar D13-630 GH			

MECHANICAL PARTS

For the position of the mechanical parts see the exploded view opposite.

Drawing	Part Number	Description	Eff.Ser.No.
1	366-1657-02	Knob Assembly	
2	366-1636-02	Knob Assembly	
3	366-1663-00	Knob Assembly	
4	366-1414-15	Knob-Push Button Assembly	
5	333-2117-04	Front Panel – Upper	
6	333 2325-00	Front Panel – Lower	
7	200-1926-00	Front Bezel – Upper	
8	200-1927-00	Front Bezel – Lower	
10	331-0407-01	Graticule – Blue (Standard)	
	or 331-0407-03	Graticule – Amber (For P7)	
11	386-3482-00	CRT Support – Front	
12	346-0145-01	CRT Retaining Strap	685251
13	386-3631-00	CRT Rear Shield Support	
14	200-1995-00	Guard	
15	252-0675-00	Brushed Nylon Foam	
16	220-0783-01	Nut Special	
17	385-0220-04	Spacer 4BA Plain x 13mm	
18	337-2374-00	CRT Shield	
19	252-0612-00	Noeprene Strip	
20	252-0606-00	Foam Rubber	
21	253-0108-00	PVC Tape	
22	348-0458-01	CRT Buffer	
23	210-1247-00	Felt Washer	
24	200-2034-01	Guard, mains switch	
25	101-0042-00	Trim – Top	
26	101-0037-00	Trim Top Moulding	
27	101-0038-00	Trim Moulding – RH Side	
28	101-0039-00	Trim Moulding – LH Side	
29	390-0552-00	Cabinet Side Assembly – RH	
30	390-0553-00	Cabinet Side Assembly – LH	
31	390-0509-01	Cabinet – Rear	
32	334-2668-01	Label – Rear	
34	343-0609-01	Handle End Clamp – Front	
35	343-0609-02	Handle End Clamp – Rear	685851
36	386-3628-00	Handle End Plate	
37	367-0217 01	Handle	685251
39	214-2487-00	Spring	
40	210-0786-00	Rivet	
41	348-0504-00	Flip Stand	
42	348-0483-00	Foot	
44	384-1451-00	Extension Shaft	
46	386-3629-00	Mounting Plate Pot	
47	407-1871-00	Bracket – Socket	
48	361-0243-00	Spacer 6BA Hex x ¾"	
49	361-0770-00	Spacer Moulding	
51	161-0059-00	Power Cable – UK Type	
52 or	161-0051-01	Power Cable Assembly – USA	
53	348-0489-00	Grommet – 5/16" I/D	
54	343-0180-00	Cable Clip	
55	343-0688-00	Clamp, capacitor	
57	348-0488-00	Grommet – Ring	
58	334-2752-00	Label – Mod Record	
59	334-2968-00	Label – Warning	
	(376-0155-01	Coupling	
60	(213-0248-00	Screw M3 x 3 Socket Set	
61	376-0177-00)	Coupling plus M3 x 3mm screws	
	213-0248-00)		
62	384-1142-20	Extension Shaft	
63	358-0576-00	Bush	
64	200-1885-00	Bezel – Push Button Moulding	
65	358-0425-00	Bush	

Drawing	Part Number	Description	Eff.Ser.No.
66	337-2371-00	Shield – Electrical	
67	252-0614-00	Neoprene 15" x 2"	
68	210-0297-01	Solder Tag 4BA	
69	210-0297-00	Solder Tag 6BA	
70	214-2287-00	Spring	
71	220-0527-00	Nut ring, slotted	
72	386-3630-00	Plate Transformer Mounting	
74	334-2978-01	Marker Ident – Warning	
75	361-0733-00	Spacer 6BA Hex x 40mm	
77	407-1868-01	Bracket - Switch Mounting (Time/Div)	
78	407-1870-00	Bracket – PCB Support	
79	407-2867-02	Bracket – Switch and Socket Mounting	
80	407-1869-02	Bracket – Switch and Socket Mounting	
82	210-3010-00	Bush 6BA Hex Riveted.	
83	342-0156-00	Insulator – Stand Off	
84	385-0206-05	Spacer 13.4mm long	
85	210-0319-00	Solder Tag (BNC size)	
87	376-0155-00)	Coupling (in 2 positions)	
	213-0248-00)	Screw M3 x 3 socket set	
88	384-1488-00	Extension Shaft	
89	384-0497-07	Extension Shaft	
91	213-0458-00	Screw 8BA CH HD x 3/16"	
92	213-0393-00	Screw 6BA PAN HD x ¼"	
93	213-0394-00	Screw 6BA PAN HD x 5/16"	
94	213-0467-00	Screw 6BA C'SK HD x 3/16"	
95	213-0406-00	Screw 6BA PAN HD x 3/8"	
96	213-0688-00	Screw 6BA PAN HD X 1¼"	
97	213-0471-00	Screw 4BA HEX HD x 3/8"	
98	213-0389-00	Screw 4BA HEX HD x ½"	
99	213-0586-01	Screw 4BA PAN HD x 7/16"	
100	213-0599-01	Screw 4BA PAN HD x ¾"	
101	213-0354-00	Screw S/T No.2 PAN HD x ¼"	
102	213-0357-00	Screw S/T No.2 C'SK HD x 3/8"	
103	213-0727-00	Screw S/T No.4 PAN HD x ¼"	
104	213-0369-00	Screw S/T No.4 PAN HD x 3/8"	
105	213-0329-00	Screw S/T No.4 PAN HD x ¼"	
106	213-0729-00	Screw S/T No.6 C'SK x ¾"	
107	213-0378-00	Screw S/T No.6 CSK x ¼"	
108	210-3034-00	Washer 8BA Helical Split	
109	216-1210-00	Washer 6BA Shakeproof	
110	210-1207-00	Washer 6BA Plain – Large	
111	210-1223-00	Washer 6BA Helical Split	
112	210-1209-00	Washer 6BA Plain – Small	
113	210-1204-00	Washer 4BA Plain – Large	
114	210-1222-00	Washer 4BA Helical Split	
115	210-1206-00	Washer 4BA Plain – Small	
116	210-1215-00	Washer 4BA Shakeproof	
117	210-1267-00	Washer Spring	
119	210-3051-00	Washer 3/8" ID x 1/32" thick	
122	220-0716-00	Nut 6BA Hex Full	
123	220-0714-00	Nut 6BA Hex Full	
125	220-0794-00	Nut 4BA Pressmount	
126	344-0258-00	Kwick Klip	
127	220-0727-00	Nut – Spire	
128	220-0516-00	Nut – Spire	
129	220-0693-00	Nut – Angle	
130	220-0813-00	Nut shaped 4BA	685851
131	220-0749-00	Nut 3/8" x 32 TPI Plain.	

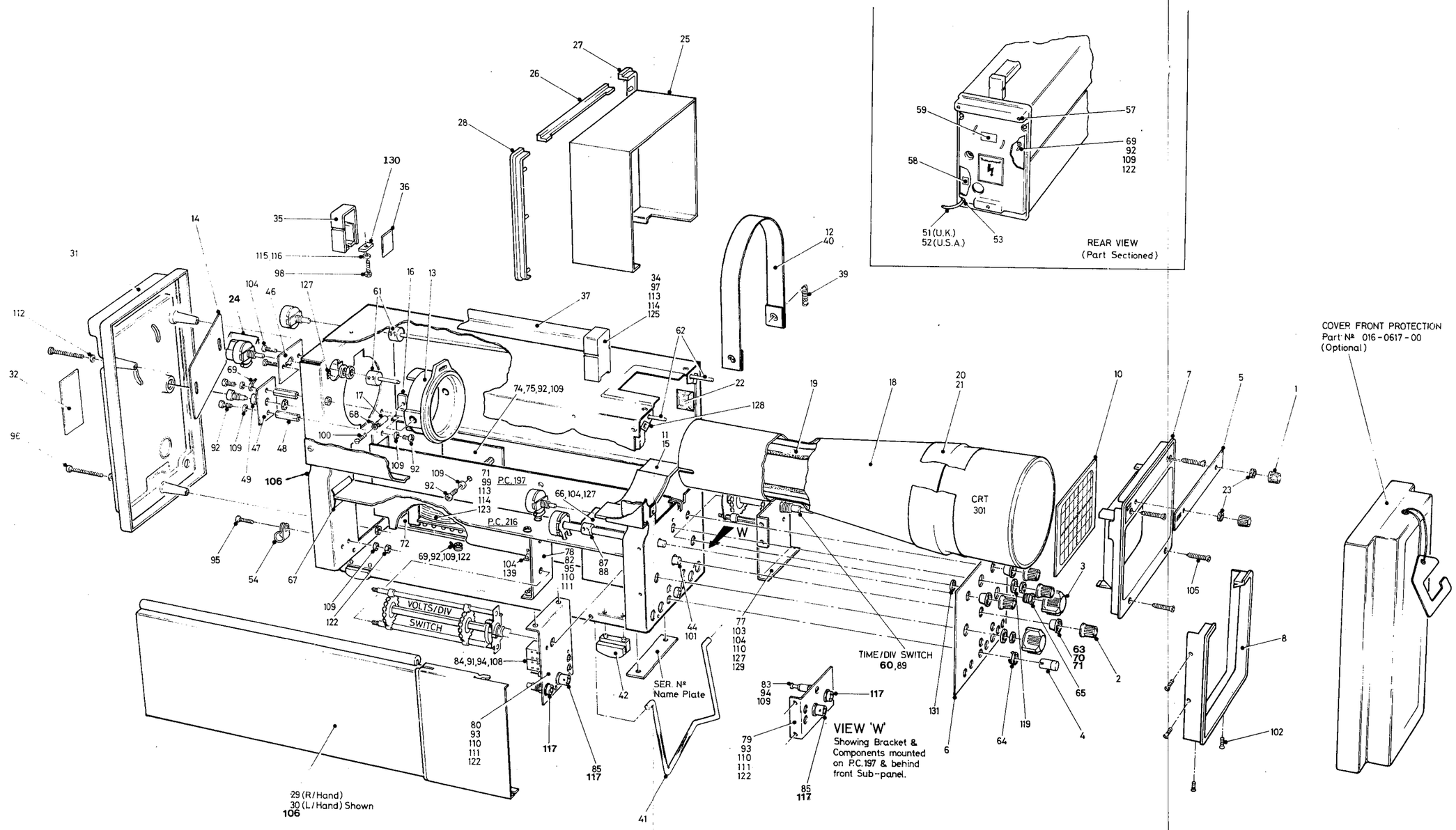

MECHANICAL ASSEMBLY
S61

SECTION 6

CIRCUIT DIAGRAMS

To minimize the risk of misinterpretation of component values on circuit diagrams, the decimal point has been replaced by the multiplier or sub-multiplier of the basic unit. For instance, 2.2 megohms is shown as 2M2 and 1.8 picofarads is shown as 1p8.

To aid the reader further, in addition to the block Circuit Reference Table in Section 5, to locate a component in the circuit diagrams, a table is provided at the top of each circuit diagram, in which the circuit reference will appear, where practicable, directly above the component being sought.

Each figure shows the appropriate Printed Circuit Board for the particular circuitry but the table below gives a complete quick reference guide to that information.

FIGURE	CIRCUIT(s)	P.C. BOARD
1	Vertical Amplifier	216
2	Trigger Amplifier	197
3	Sweep Generator, Unblanking and Horizontal Amplifier	197
4	Time/Div Switch	–
5	Power Supply and CRT	197

RESISTORS	601 602 901 902 603 604 605 606 611 618 610 903 904 620 612 607 608 609 613 614 615 616 905 906 617 627 647 648 649 631 619 621 622 623 624 625 626 628 629 632 633 651 652 634 635 636 637 638 639 641 642 643 644 645 646
CAPACITORS	601 602 902 903 904 905 906 907 908 909 911 912 913 603 604 605 606 607 609 611 612 610 613 614 615
MISC	SK 901 SK 902 S901 1F D601 TR601 D603 S902 2R D611 TR602 TR603 S902 1R TR604 TR605 TR606 TR607 D608 D609 D604 D605 TR608 TR609 TR610

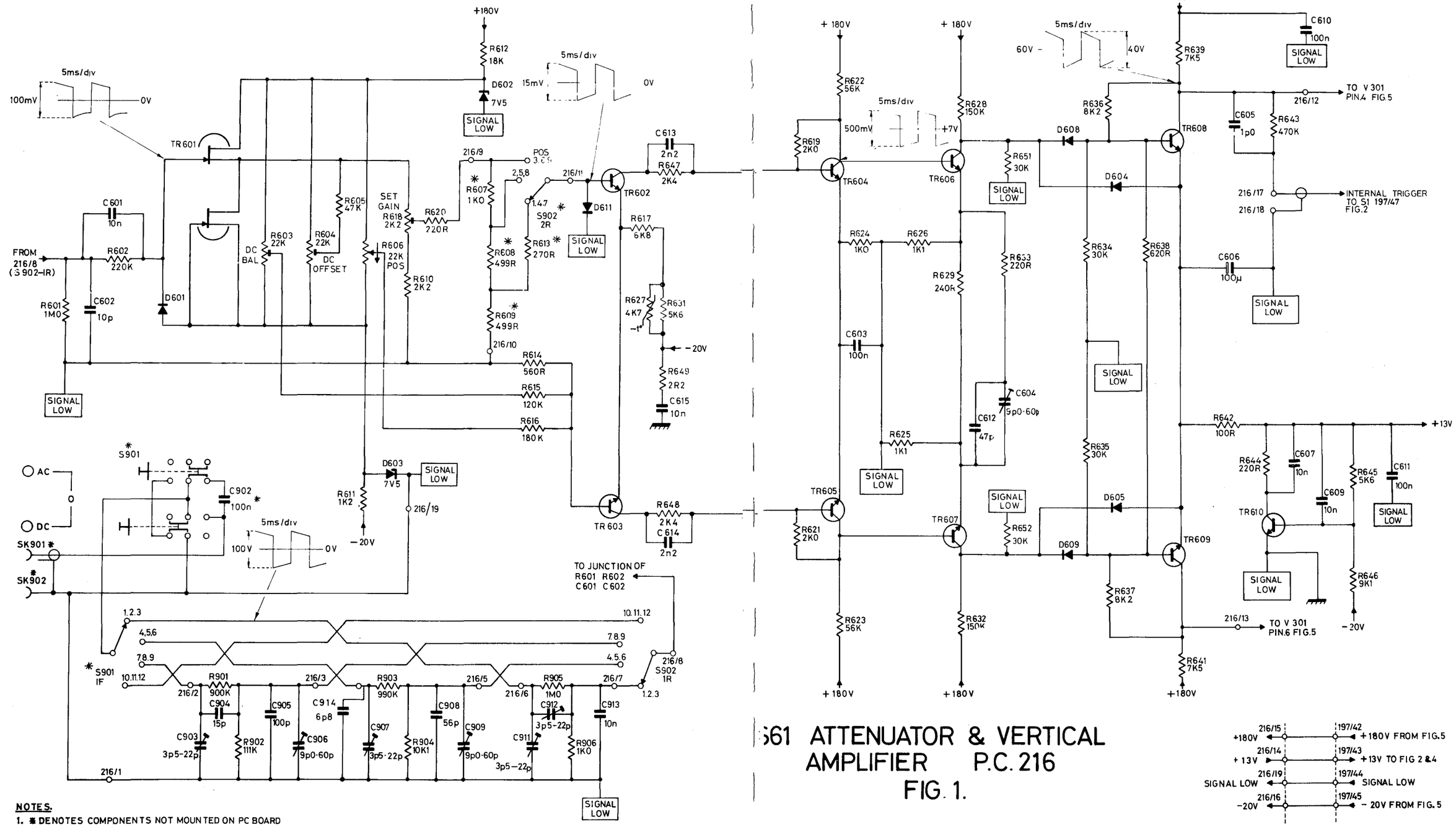

NOTES.

1. * DENOTES COMPONENTS NOT MOUNTED ON PC BOARD
2. 216/1 DENOTES PC BOARD / EYELET OR TERMINAL No CONNECTION
3. ALL WAVEFORMS ARE MEASURED WITH A 50Hz 100Vpp SQUAREWAVE FED TO VERTICAL AMPLIFIER INPUT. VOLTS/DIV SET TO 20V AND TIME/DIV TO 2ms

561 ATTENUATOR & VERTICAL AMPLIFIER P.C. 216

FIG. 1.

RESISTORS 1 3 4 5 6 7 9 11 12 10 8 2 14 15 16 13 18 19 17 20 35 34 22 21 23 30 24 25 26 27 28 29 32 31 33

CAPACITORS 1 2 13 3 4 5 7 10 15 14 8 9 11 12

MISC. S1 D5 D1 D3 D2 TR1 TR6 S2 S3 D8 TR2 D4 TR7 L1 TR3 TR4 D6 D7 TR5

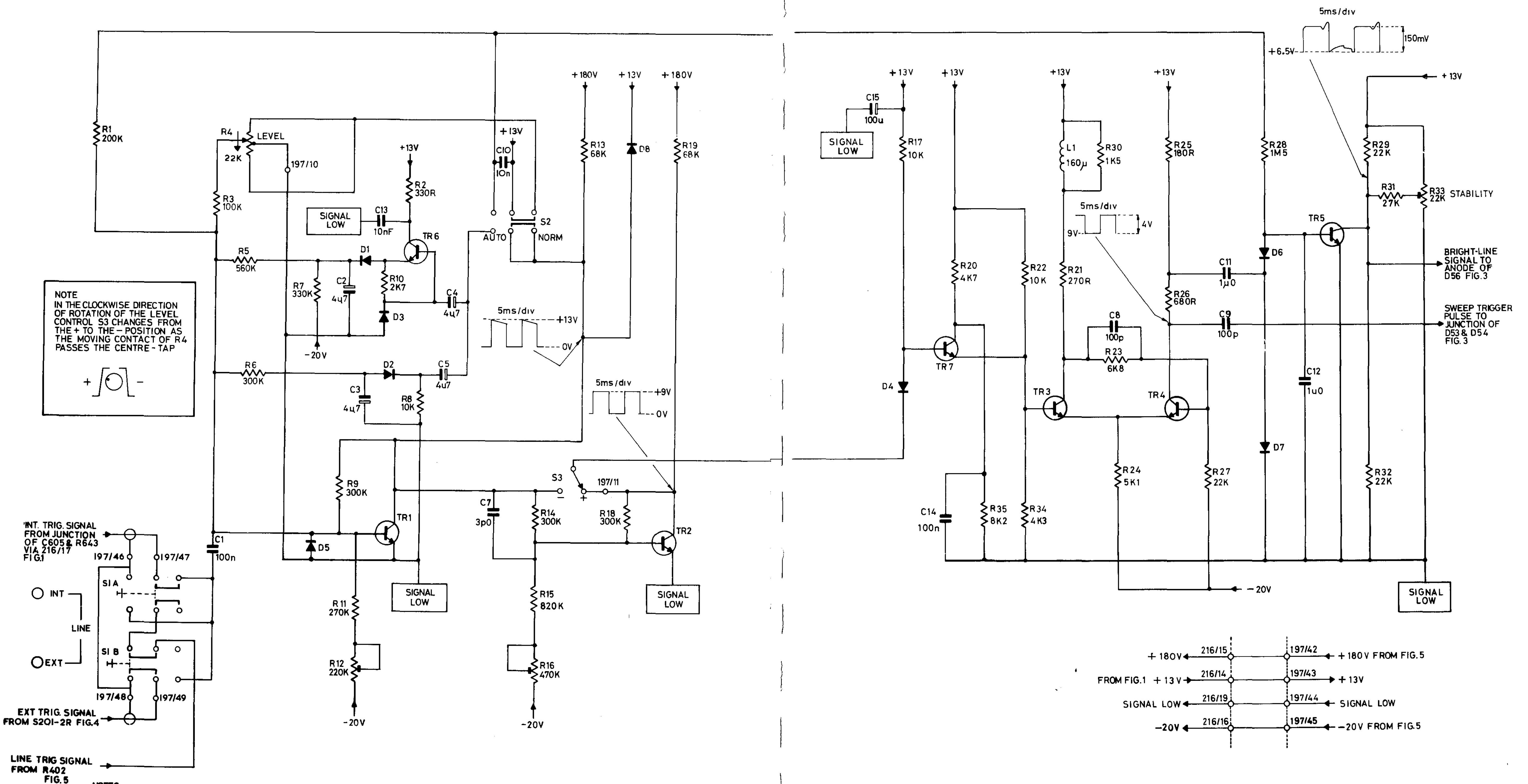

NOTE
IN THE CLOCKWISE DIRECTION OF ROTATION OF THE LEVEL CONTROL S3 CHANGES FROM THE + TO THE - POSITION AS THE MOVING CONTACT OF R4 PASSES THE CENTRE-TAP

NOTES.
1. ✱ DENOTES COMPONENTS NOT MOUNTED ON PC BOARD
2. 197/10 DENOTES PC BOARD/EYELET OR TERMINAL No. CONNECTION
3. ALL WAVEFORMS MEASURED WITH A 50Hz 100Vpp SQUAREWAVE FED TO VERTICAL AMPLIFIER INPUT. VOLTS/DIV SET TO 20V AND TIME/DIV TO 2ms

S61 TRIGGER AMPLIFIER
PC197 FIG.2

RESISTORS	55 53 54 56 51 80 52 95 96 59 57 58 61 70 62 60 63 64 65 97 66 67 68 72 71 73 69 76 77 74 75 81 78 83 82 84 85 86 87 88 89 91 93 92 94
CAPACITORS	51 53 54 58 59 52 55 65 68 66 71 72 74 75
MISC	TR51 D59 D61 D62 D51 TR53 D63 TR54 D52 TR55 D53 D54 TR56 TR57 TR58 D55 D56 TR52 D64 TR59 TR61 D57 D58 TR62

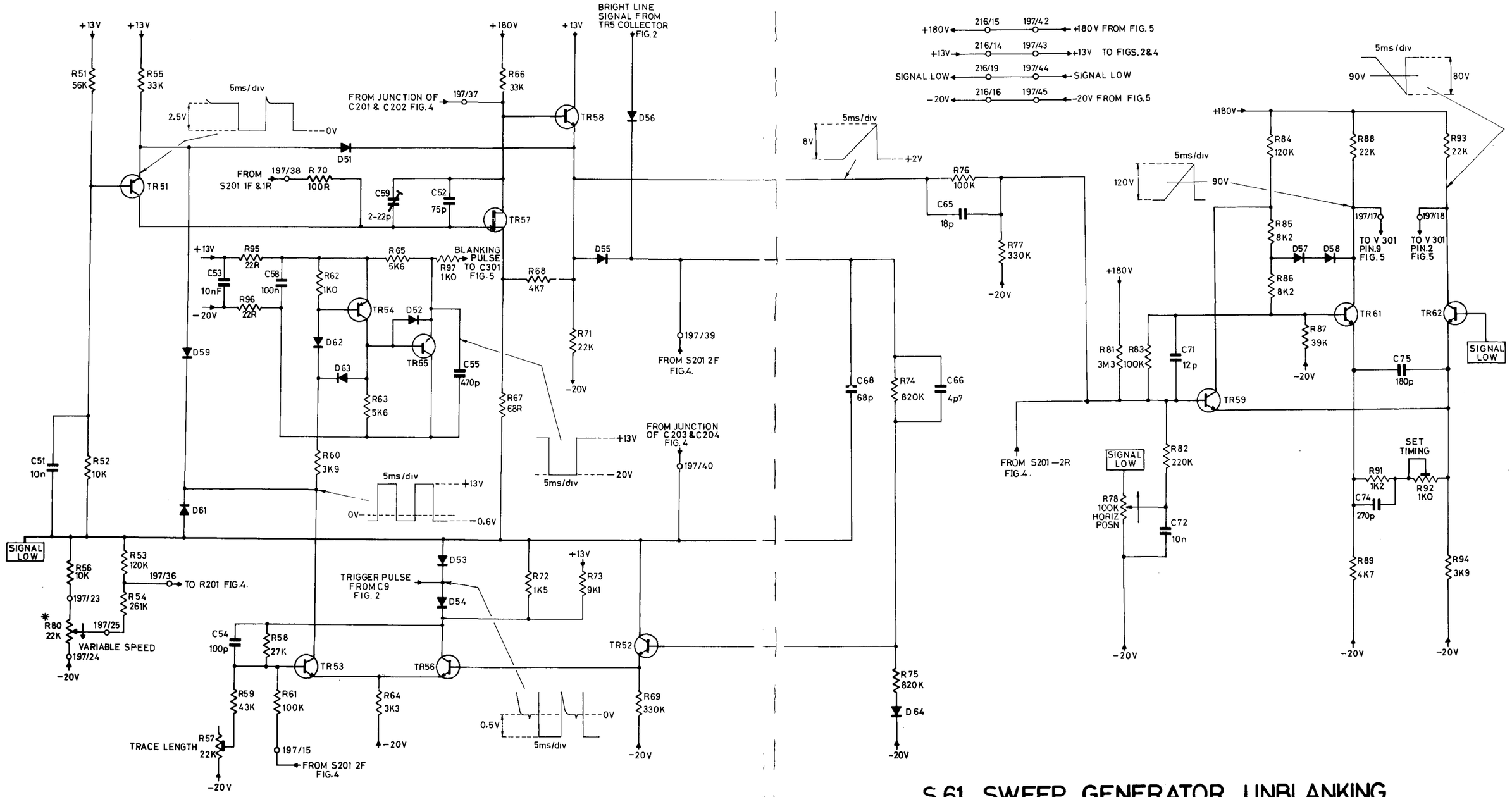

NOTES.
1. * DENOTES COMPONENTS NOT MOUNTED ON P.C. BOARD
2. 197/16 DENOTES P.C. BOARD/EYELET OR TERMINAL No
3 ALL WAVEFORMS MEASURED WITH A 50Hz 100Vpp SQUAREWAVE FED TO VERTICAL AMPLIFIER INPUT. VOLTS/DIV SET TO 20V AND TIME/DIV TO 2ms

S 61 SWEEP GENERATOR, UNBLANKING, & HORIZONTAL AMPLIFIER P.C. 197

FIG. 3

RESISTORS	201	202	203	204	205					208	207	
CAPACITORS						201 202 207			206	203 204	205 208	
MISC.						S201-1F	S201-1R	D201	SK201	S201-2F		S201-2R

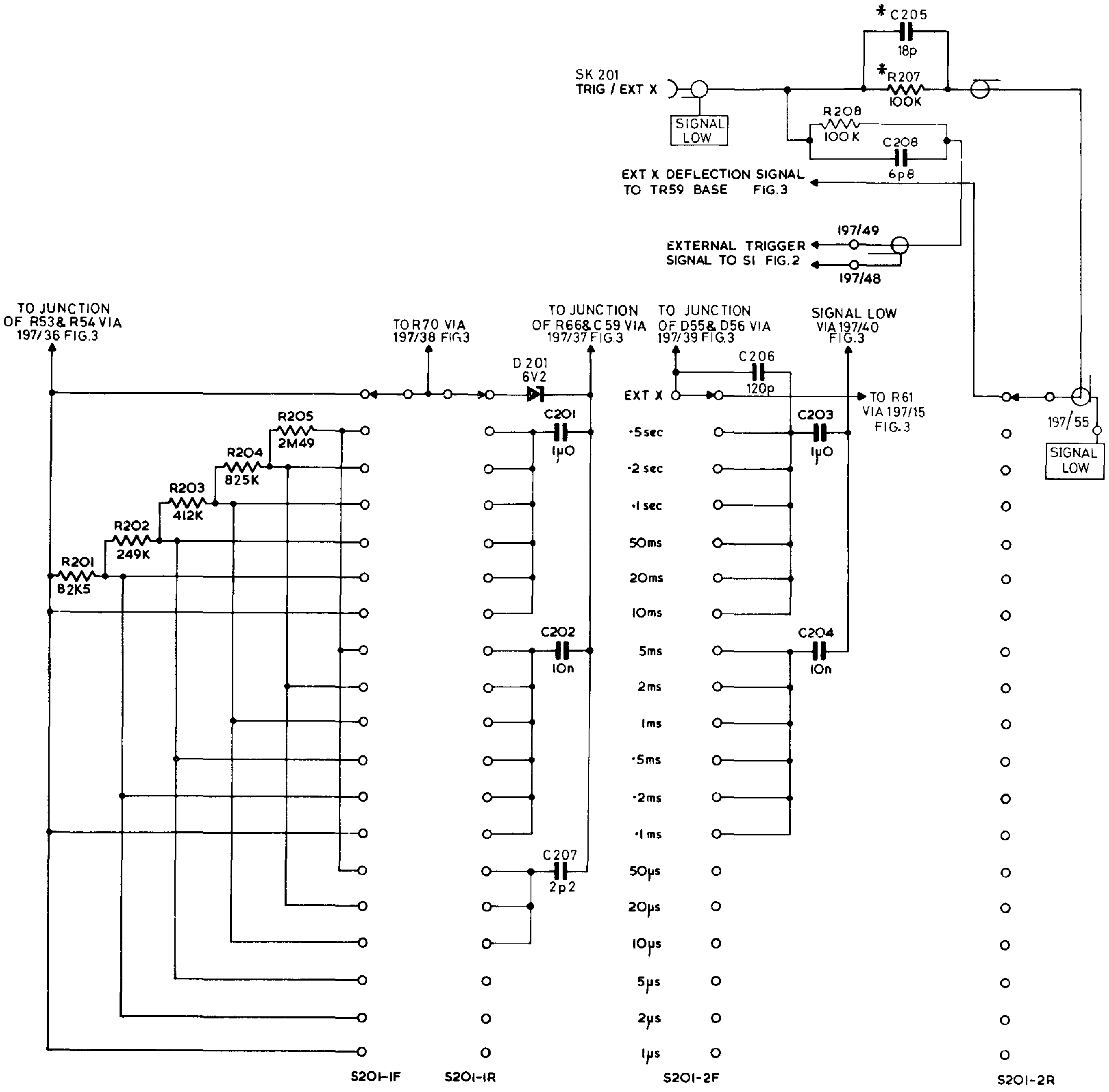

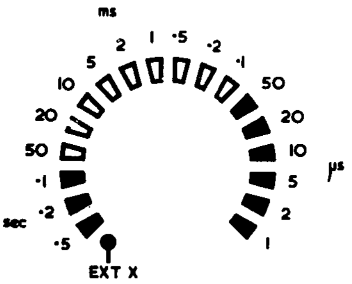

TIME/DIV SWITCH
S61

FIG. 4

RESISTORS	402 403 401 405 407 406 404 408 303 307 308 309 310 304 305 306 301 302 314 315 311 313 312
CAPACITORS	405 402 406 401 409 403 407 411 410 404 408 300 301 306 302 303 305 304
MISC	SK401 T401 D405 D401 D406 D402 D407 D403 D408 D404 LP401 LP402 S401 FS401 S402 D301 D302 SK301 V301

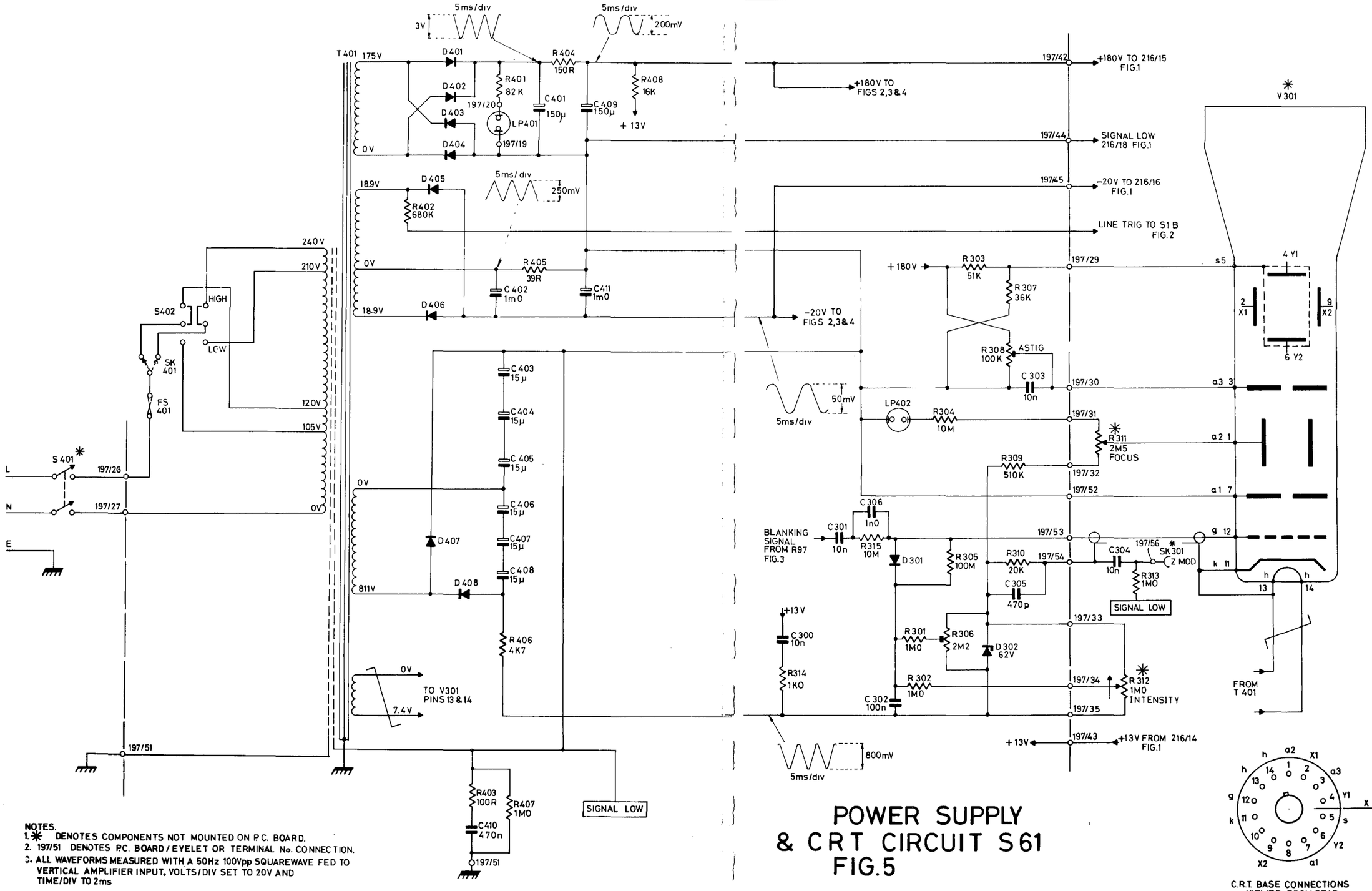

NOTES.
1. ✳ DENOTES COMPONENTS NOT MOUNTED ON P.C. BOARD.
2. 197/51 DENOTES P.C. BOARD / EYELET OR TERMINAL No. CONNECTION.
3. ALL WAVEFORMS MEASURED WITH A 50Hz 100Vpp SQUAREWAVE FED TO VERTICAL AMPLIFIER INPUT, VOLTS/DIV SET TO 20V AND TIME/DIV TO 2ms

POWER SUPPLY & CRT CIRCUIT S61 FIG.5

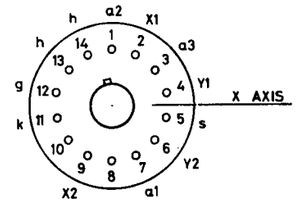

C.R.T. BASE CONNECTIONS VIEWED FROM REAR.

PRE-SET CONTROLS
(component side)

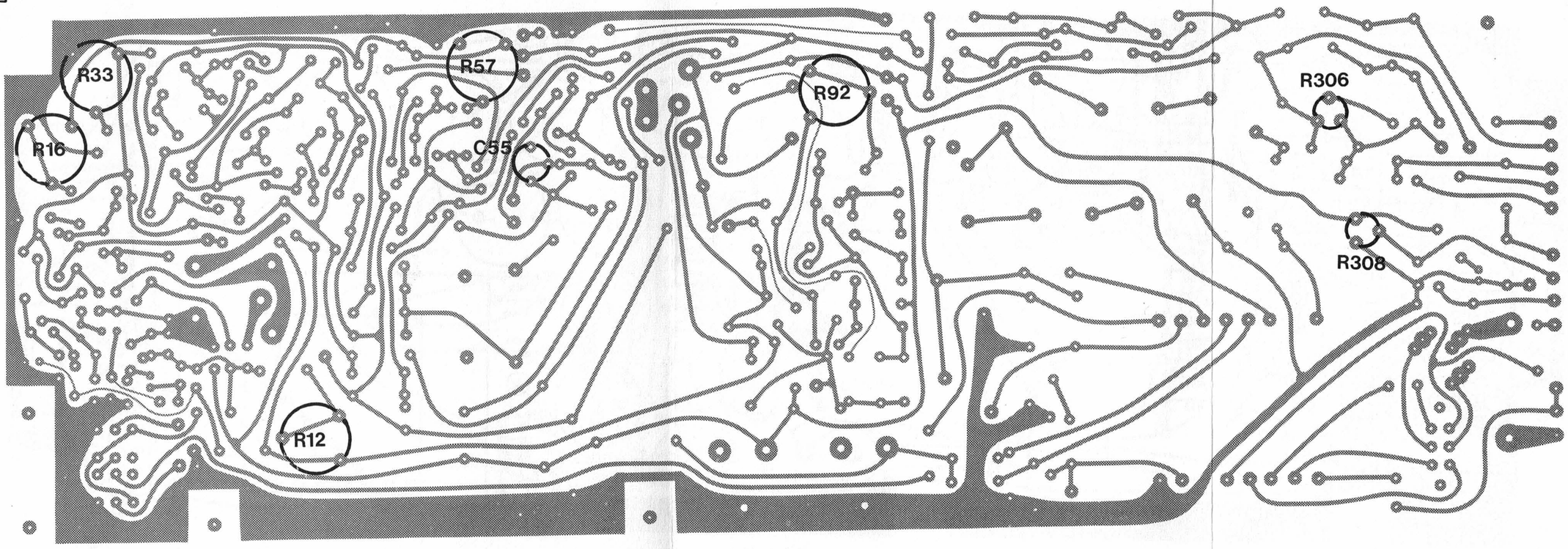

P.C. 197

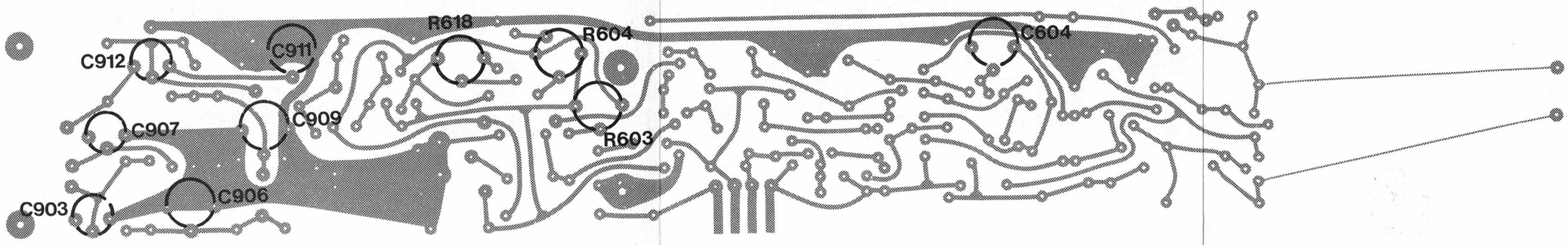

P.C. 216

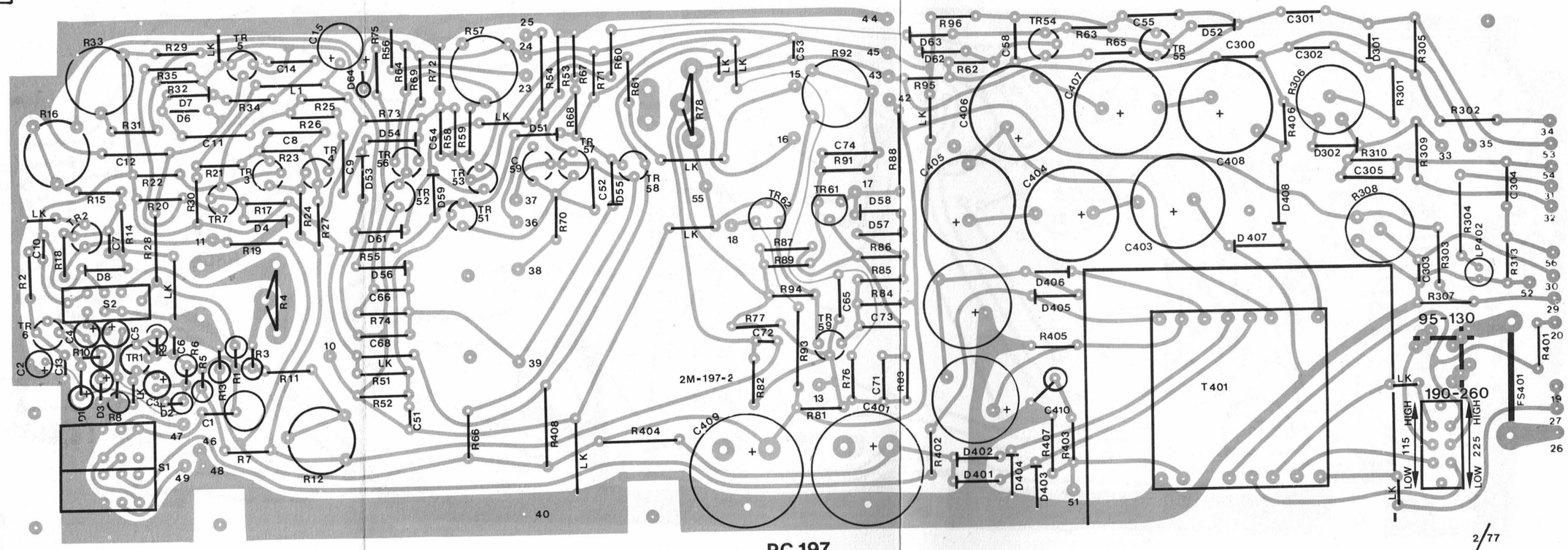

PC 197

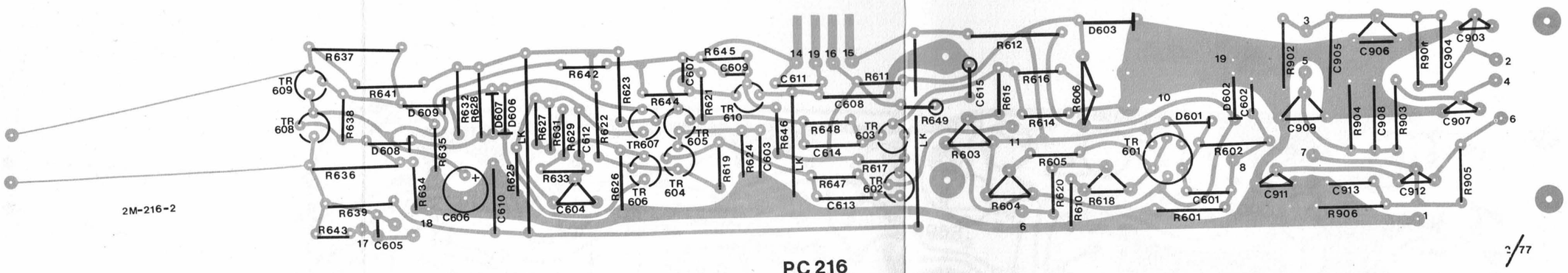

PC 216