TEKTRONIX®

1340

TEST SET

INSTRUCTION MANUAL

Tektronix, Inc.
P.O. Box 500
Beaverton, Oregon 97005

Serial Number _____

070-3130-00

873

WARRANTY

All TEKTRONIX instruments are warranted against defective materials and workmanship for one year. Any questions with respect to the warranty should be taken up with your TEKTRONIX Field Engineer or representative.

All requests for repair and replacement parts should be directed to the TEKTRONIX Field Office or representative in your area. This will assure you the fastest possible service. Please include the instrument Type Number or Part Number and Serial Number with all requests for parts or service.

Specifications and price change privileges reserved.

U.S.A. and Foreign TEKTRONIX products covered by U.S. and foreign patents and/or patents pending.

TABLE OF CONTENTS

NOTE

Two other instruction manuals,

070-3091-00 Reference Signal Interface and
070-3057-00 Waveform Digitizer,

contain Performance Check and Calibration procedures that use the 1340 Test Set.

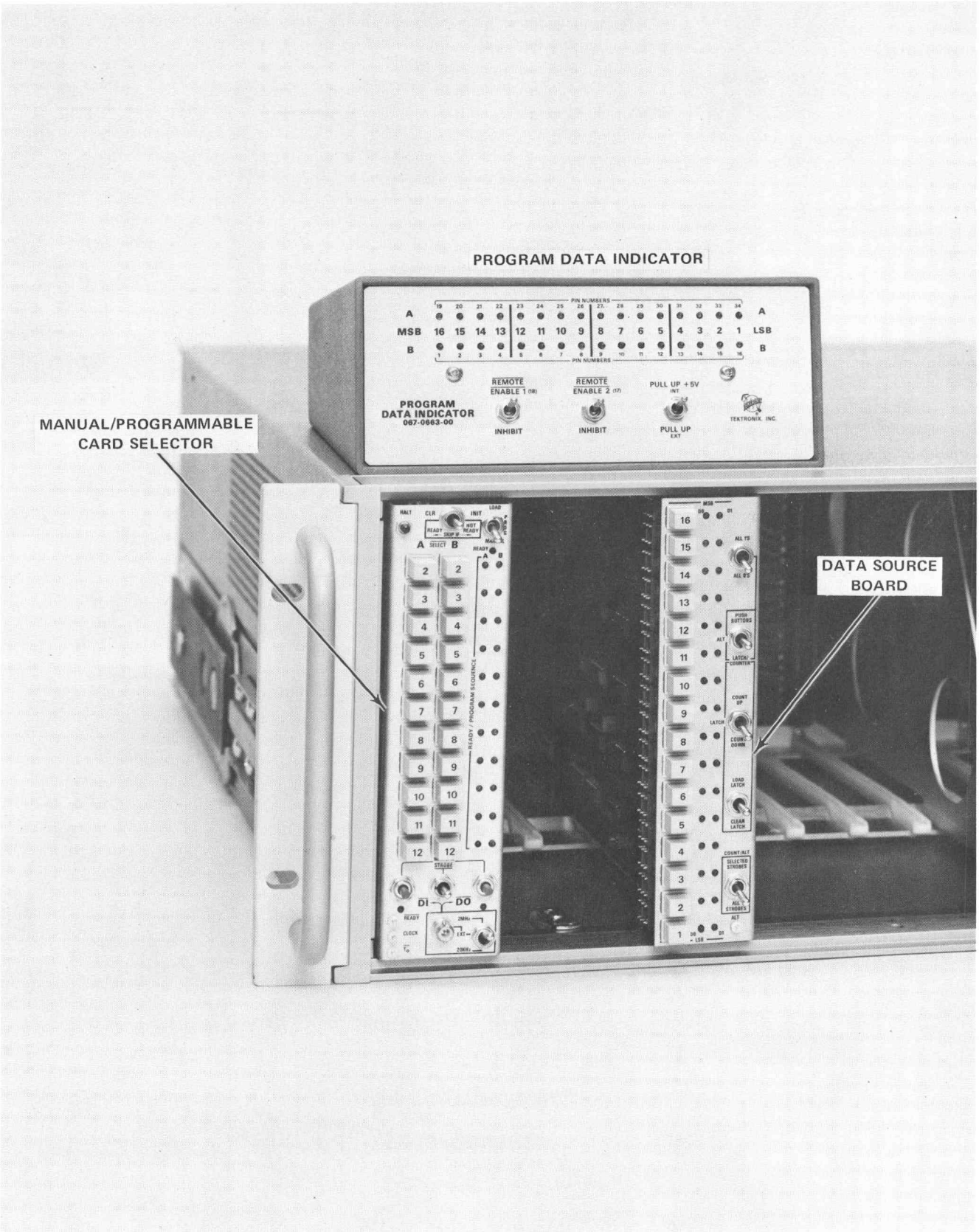

Fig. 1-0. 1340 TEST SET installed in a 1340 DATA COUPLER.

1340 TEST SET

General

This Test Set is used to determine the operating status of the 1340 Data Coupler and of circuit cards installed in the 1340. It is also used to monitor signal lines to an instrument that is being controlled by the 1340.

The Test Set consists of:

ITEM	PART NUMBER
1. 1340 Manual/Programmable Card Selector	067-0661-00
2. 1340 Data Source Indicator	067-0662-00
3. Program Data Indicator	067-0663-00
4. Interconnecting Cable	012-0131-00

Installation

Item 1 must be installed in connector J1 of the 1340. Item 2 may be installed in any connector, J2 through J12. Item 3 may be connected to the 1340 using Item 4.

The 36-pin connectors of Item 4 are not keyed. This permits connecting the Program Data Indicator to any of the 36-pin connectors on the rear panel of the 1340.

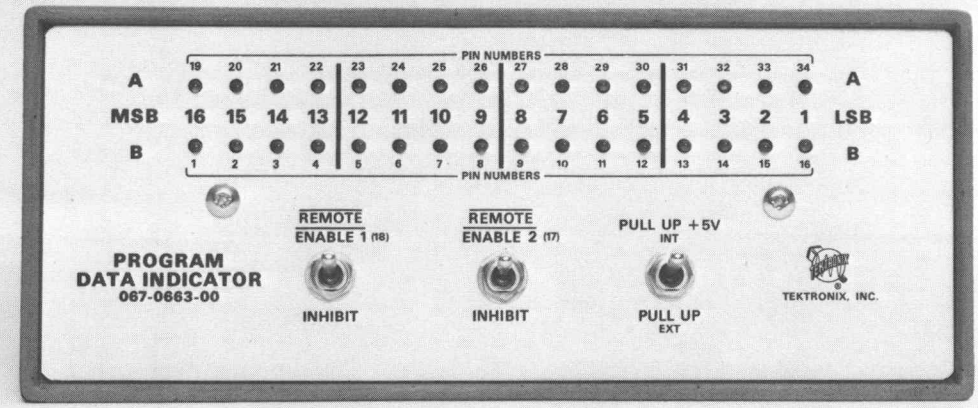

Fig. 2-0. Front Panel of a PROGRAM DATA INDICATOR.

PROGRAM DATA INDICATOR

067–0663–00

The Program Data Indicator is part of the 1340 Test Set. It is used to indicate the logic states of 32 program lines and to set the logic states of two other program lines. The light emitting diodes (LED's) used as logic state indicators are arranged and labeled to correspond with the 16-Bit structure of the circuit cards used in the 1340 Data Coupler. Two 36-pin connectors, J1 and J2, similar to the 36-pin connectors of the 1340, Type 230, and Type 240, are used to loop the program lines through the indicator to permit on-line monitoring. See diagram 6.

NOTE

J1 and J2 are not keyed

Pins 1 through 16 and 19 through 34 of both connectors, J1 and J2, are the terminals for the looped-through program lines that are connected to the LED indicator circuits. Pins 17 and 18 of both connectors, J1 and J2, are the terminals for the program lines whose logic states are controlled by front panel switches.

Front Panel Controls and Indicators

REMOTE ENABLE 1 (18) INHIBIT

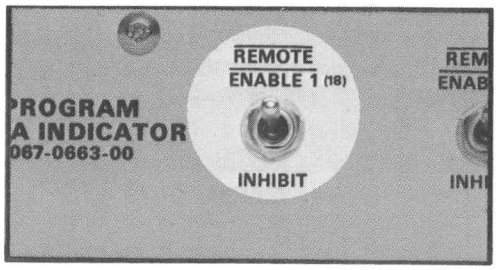

When set to REMOTE ENABLE 1(18), the looped-through line formed by the connection between pin 18 of J1 and pin 18 of J2 is set to a low logic level (47 Ω resistor to ground). When set to INHIBIT the logic level of the "pin 18" line is set to a high logic level (circuit to ground is opened).

REMOTE ENABLE 2 (17) INHIBIT

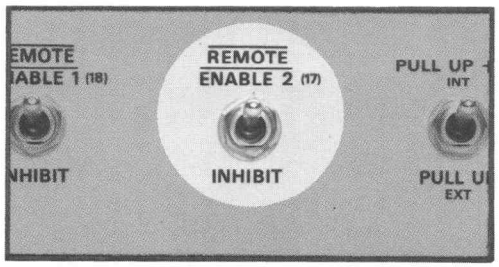

When set to REMOTE ENABLE 2(17), the looped-through line formed by the connection between pin 17 of J1 and pin 17 of J2 is set to a low logic level. When set to INHIBIT, the "pin 17" line is set to a high logic level.

PULL UP +5 V INT/ PULL UP EXT

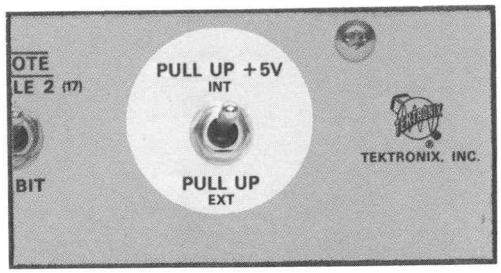

When this switch is set to PULL UP +5 V INT, an internal pull-up circuit is connected to each looped-through program line that is connected to an indicator circuit. When set to PULL UP EXT, pull-up requirements must be satisfied by external means.

INDICATORS (32 each)

Each logic state indicator circuit is configured to turn on its LED when the logic state of its program line is low.

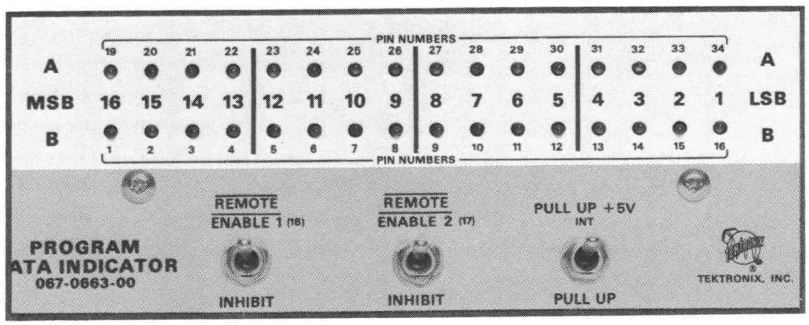

The pin numbers relate the indicators with their respective program lines. The A and B designations relate the indicators with the A and B sides of the 1340 circuit card. The numbers 1 through 16 located between the two rows of indicators relate the LED's with the bit position of a 16 bit word. The least significant bit (LSB) is displayed by the indicators connected to program lines 16 and 34. The most significant bit (MSB) is displayed by the indicators connected to program lines 1 and 19.

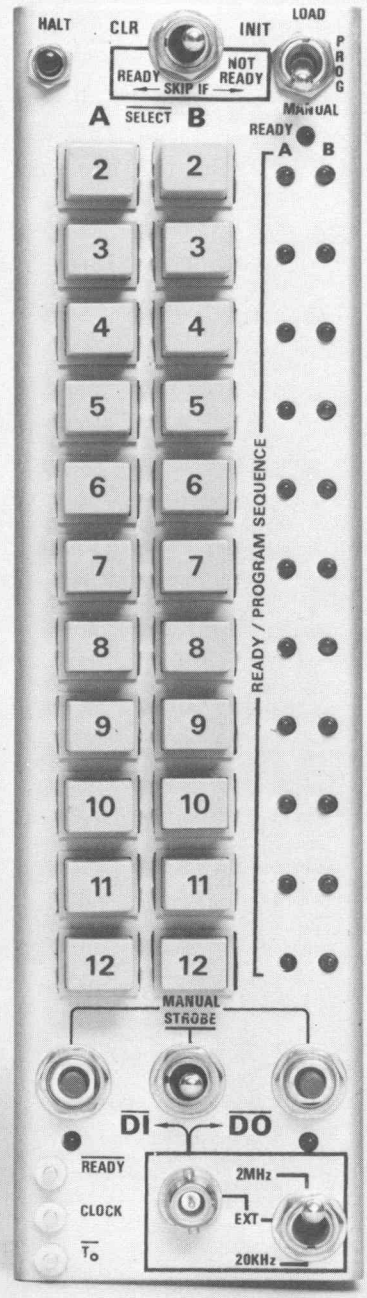

Fig. 3-0. Front Panel of a MANUAL/PROGRAMMABLE CARD SELECTOR.

1340 MANUAL/PROGRAMMABLE CARD SELECTOR

067–0661–00

The Manual/Programmable Card Selector (M/P Card) is part of the 1340 Data Coupler Test Set. The M/P Card provides a means of: 1) determining the operating status of the other circuit cards installed in the 1340, and 2) isolating system troubles that relate to the 1340. The test functions of the M/P Card can be performed manually or they can be programmed. Up to 16 test functions can be stored and performed in sequence by operating the M/P Card in its Programmed mode.

CONTROLS AND INDICATORS

Front Panel Controls

MANUAL/PROG/LOAD

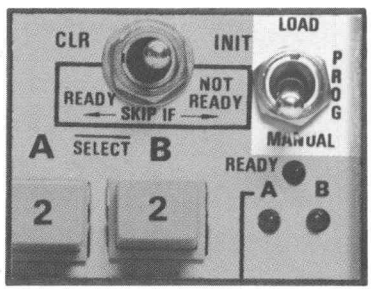

This multi-purpose switch is used to select the operating mode, either Manual or Programmed, to load (store) a 16-bit instruction in the memory of the M/P Card, or to initialize the memory of the M/P Card.

1) When set to MANUAL, the front panel switches may be used to perform a test function.

2) When set to PROG, up to 16 test functions can be stored and then performed in an automatic sequence.

3) When set to the LOAD position, a 16 bit word is stored in the memory of the M/P Card.

4) When moved to the MANUAL position and back to the PROG position, the program counter is set to zero.

CLR/INIT

SKIP IF READY/ SKIP IF NOT READY

This is a dual purpose switch. (1) in the manual Mode of operation it is the CLR/INIT switch and is used to produce either a CLEAR of INITIALIZE signal for the 1340. (2) For program construction, it is used to produce either a SKIP IF READY or a SKIP IF NOT READY instruction for storage in the memory.

HALT

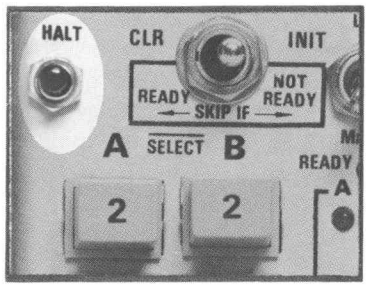

This dual purpose pushbutton switch can be used (1) to produce a HALT instruction for a program that is being stored in the memory, or (2) when the M/P Card is in a Programmed mode, it can be used to stop an automatic sequence. When this switch is used to stop a program process, the program can be started again by pressing either the DI or DO pushbuttons.

SELECT A and B (2 through 12)

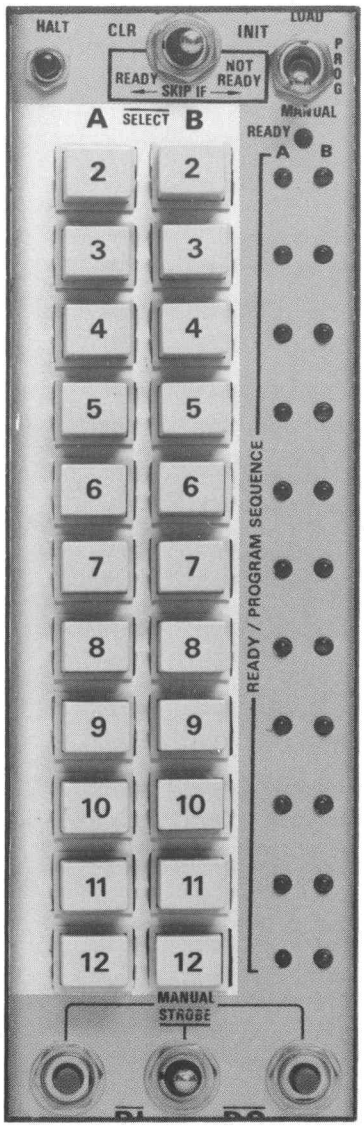

These multi-use pushbuttons are used to control the select lines to the 1340 circuit card connectors (2 through 12) and to generate program instructions. During manual operation, pressing one of these switches applies a low logic level to the respective select line. For program construction these switches can be used to produce a Status Check instruction, or they may be used in conjunction with the DI and DO strobes to produce input or output (Read or Write) instructions.

DI and DO Pushbuttons

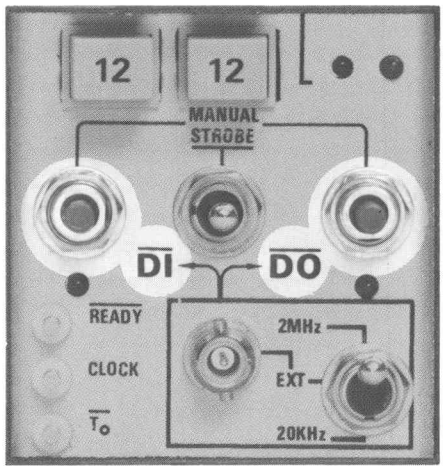

(1) When the M/P Card is in a MANUAL operating mode; setting the DI/MANUAL STROBE/DO switch to MANUAL STROBE and pressing the DI pushbutton, activates the DI STROBE line in the 1340 (manual DI strobe). Similarly the DO pushbutton can be used to activate the DO STROBE line in the 1340 (manual DO strobe). The duration of a manually produced strobe is dependent on the setting of the PULSE/HOLD switch (see Internal Control). If the PULSE/HOLD switch is set to PULSE, a manually produced strobe will have a duration of approximately 100 ns. If the PULSE/HOLD switch is set to HOLD, the strobe will remain in the active state as long as the DI or DO pushbutton is held in.

(2) When the M/P Card is in a Programmed operating mode and the DI/MANUAL STROBE/DO switch is set to MANUAL STROBE, either the DI or the DO pushbutton can be used as a single-step Clock Source for the M/P card memory.

NOTE

THREE CLOCK PULSES ARE REQUIRED TO PROCESS AN INPUT OR OUTPUT INSTRUCTION.
Three or more may be required for a Status Check. If the READY line being checked is in a False state, an indefinite number will be required. When the line becomes True three pulses are required to process the Status Check.

(3) When a programmed operation is halted, either by the HALT switch or by a program instruction, pressing either the DI or DO pushbutton will restart the program.

DI/MANUAL STROBE/DO

This 3 position switch is used to connect a source of continuous clocks (Clock Source) to the DI and DO strobe busses or to configure the DI and DO pushbuttons for manual strobe production.

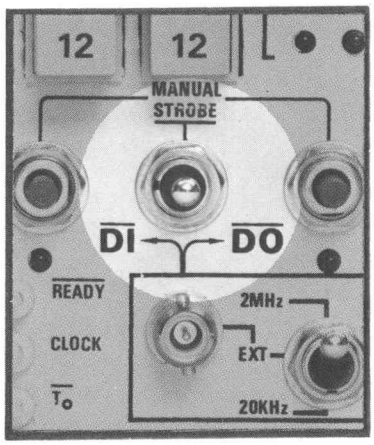

MANUAL MODE

(1) When the M/P Card is in a Manual operating mode and this switch is set to MANUAL STROBE, the DI and DO pushbuttons can be used as independent single-step sources driving the DI and DO STROBE busses, respectively.

(2) If set to DI, a continuous pulse train at 20 kHz, 2 MHz, or EXT frequency is applied to the DI STROBE bus of the 1340. Similarly for the DO position.

PROGRAMMED MODE

(1) When the M/P Card is in the Programmed operating mode, setting the DI/MANUAL STROBE/DO to either the DI or DO position connects the output of the Clock Source to the program counter. (See PULSE/HOLD and 20 kHz/EXT/2 MHz switch descriptions.

(2) A DI or DO strobe instruction can be stored in memory by setting the DI/MANUAL STROBE/DO switch to MANUAL STROBE, holding the desired DI or DO pushbutton in, and moving the LOAD/PROG/MANUAL switch from PROG to LOAD.

20 kHz/EXT/2 MHZ

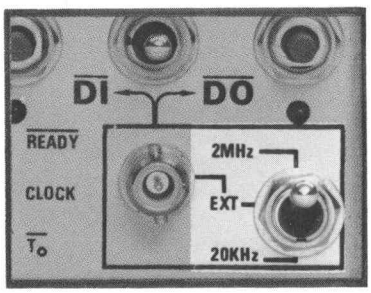

This switch is used to select the 20 kHz oscillator, the 2 MHz oscillator, or an external signal as the Clock Source. If an external signal is to be used as the clock source, the signal must have an amplitude of at least +1.5 volts but not more than +5 volts (with respect to chassis ground). The EXT connector is terminated in 50 Ω.

Internal Control

PULSE/HOLD

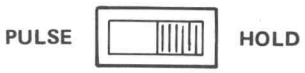

This slide switch is used in conjunction with the DI and DO strobe pushbuttons and the 20 kHz/EXT/2 MHz switch.

MANUAL MODE

(1) In the PULSE position, a manually produced strobe will have a duration of approximately 100 ns. In the HOLD position, a manual strobe will remain in the active state as long as the DI or DO pushbutton is pressed in.

(2) When using the Clock Source instead of the DI and DO pushbuttons for strobe production, setting this switch to PULSE will produce pulses of approximately 100 ns duration at the frequency of the Clock Source (20 KHz oscillator, external generator, or 2 MHz oscillator). Setting this switch to HOLD will (a) produce a square-wave at the 20 kHz or 2 MHz frequencies, or (b) reproduce the waveform of the external generator.

Test Points (front panel)

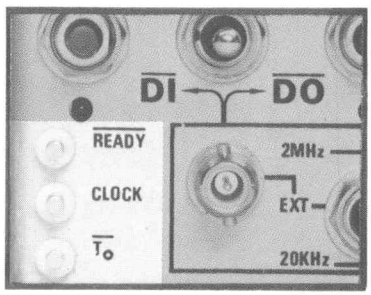

PROGRAMMED MODE

(1) In PULSE Position, a 100 ns pulse or pulses will be applied to the DI and/or DO STROBE busses at the beginning of the second clock pulse of that instruction. (Three clocks are required for an Input or Output instruction.)

(2) In HOLD Position, the DI or DO STROBE busses will be held true for one clock period beginning with the second and ending on the third clock pulse. At 2 MHz clock rate, the strobes will be 0.5 μs wide, and at 20 kHz, they will be 50 μs wide.

READY

This pin is an access point to the READY signal produced by the 1340 circuit card which is SELECTED.

CLOCK

This pin is an access point to the selected Clock source.

Tϕ

This pin provides an access for monitoring the start time (Tϕ) of a program. It is useful as a trigger signal to aid in oscilloscope monitoring of a program sequence and resulting response.

Indicators

READY

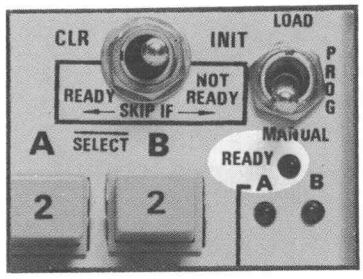

This indicator is illuminated by low (True) READY signals from the 1340 circuit cards.

READY/PROGRAM SEQUENCE

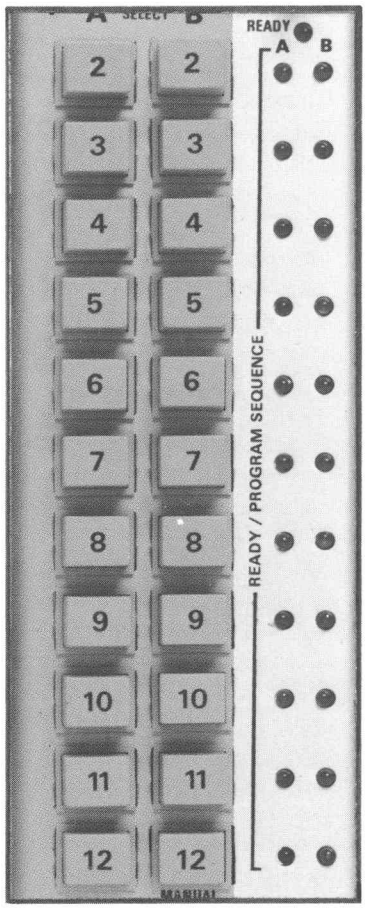

These indicators have dual purpose. When the M/P Card is in a manual mode of operation, they indicate the READY status of all the 1340 circuit cards. In a programmed operating mode, they indicate the instruction that is being processed. Example: if a SELECT 2A instruction is made part of a program, and the program is stepped to the SELECT 2A instruction, indicator 2A will illuminate.

DI and DO

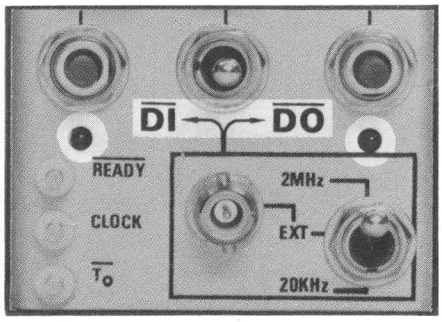

These indicators are illuminated when their respective strobe busses are activated by a programmed instruction which contains the DI or DO function.

OPERATING INSTRUCTIONS

Store Program

A program consisting of up to 16 instructions or functions (words) can be stored in the M/P Card's memory. The procedures for constructing a program are listed in Table 1.

TABLE 1

Procedure	Action	Purpose
Set Up	Set the DI/MANUAL STROBE/DO switch to MANUAL STROBE.	Disconnect the Clock source from the memory counter.
Set program counter to zero	Move the MANUAL/PROG/LOAD switch to MANUAL and back to PROG.	This action sets the memory to the first program step.
Store first word	Press and hold desired front panel function switch(s) e.g., SELECT 2A. Momentarily move the MANUAL/PROG/LOAD switch to LOAD.	This action stores the word produced by pressing the front-panel switch(s). This example, (storing SELECT 2A), produces a status check instruction for the READY signal line from circuit card 2A.
Store additional words	Press and hold the desired front panel switches and momentarily move the MANUAL/PROG/LOAD switch to LOAD. (See Table 2 for storage procedures.)	This action can be repeated to store a total of 26 words. NOTE If a program consists of 16 words, the program will automatically jump to ϕ and repeat. If the program consists of less than 16 instructions, and a repetitive program is desired, a jump to ϕ instruction must be stored as the last instruction

Store Instructions and Functions (words)

The procedures for storing words in the M/P Cards memory are listed in Table 2. In this table, the action of momentarily moving the MANUAL/PROG/LOAD switch to LOAD for the purpose of storing a word is referred to as "loading."

TABLE 2

Word	Storage Procedure	Word Purpose or Function
Input or Output Instruction (Read or Write)	Press the desired SELECT, A or B, switch in. Simultaneously press the appropriate DI or DO pushbutton and load.	When this word is encountered in a program, the selected circuit card is enabled to react to following instructions. The SELECT switches correspond to the circuit card connectors of the 1340. SELECT 2A corresponds to the A side of connector J2, etc. The "appropriate" DI or DO pushbutton is determined by the requirements of the circuit card being addressed. Normally, a DI STROBE is used for an Input instruction (Data In) and a DO STROBE for an Output instruction (Data Out). There are a few exceptions. Refer to the individual circuit card manuals for these special requirements.
Status Check	Press the SELECT switch that corresponds to the 1340 circuit card whose READY status is to be checked. Load.	When this word is encountered, the logic level of the READY line from the selected circuit is examined. If the logic level is low (True), the program will continue to the next word. If the logic level is high (False), the program will wait at the step until that READY line does become True. When a True occurs, the programmer will proceed to the next instruction.
SKIP IF READY	Hold SKIP IF switch to READY and load.	When this word is encountered, the READY line of the circuit card being selected is examined. If the logic level of the line is low (True), the next word in the program is skipped.

TABLE 2 (continued)

Word	Storage Procedure	Word Purpose or Function
SKIP IF NOT READY	Hold SKIP IF switch to the NOT READY position and load.	When this word is encountered, the READY line of the circuit card being controlled is examined. If the logic level of the line is high (False), the next word in the program is skipped.
HALT	Hold the HALT switch in and load.	This word will stop the program.
Clear (CLR)	All SELECT switches must be Out. Press DI pushbutton and load.	When this word is encountered, the 1340 CLEAR bus is activated for one clock source period.
Initialize (INIT)	All SELECT switches must be out. Press DO pushbutton and load.	When this word is encountered, the 1340 INITIALIZE bus is activated for one clock source period.
Jump to Zero	All SELECT switches out. Load.	This word will cause the program to return to its first word.

NOTE: An Input/Output instruction or a status check instruction may be combined if needed with a SKIP IF READY/NOT READY and/or a HALT as a single instruction. SKIP IF READY/NOT READY and HALT must be combined with either an Input/Output instruction, or a status check instruction. CLEAR, INITIALIZE and JUMP to ZERO are separate instructions. CLEAR and INITIALIZE may be combined as a single instruction.

Any instruction preceded by a valid SKIP condition will be deactivated.

Special Instructions

Two Data Source Board functions are programmable. These functions are Clear the Latch and Load the Latch. The procedures for storing these instructions in the M/P Card's memory are listed in Table 3.

TABLE 3

Word	Storage Procedure	Word Purpose
Clear Latch	Press the SELECT A switch that corresponds with the 1340 circuit card connector that the Data Source Board is installed in. Press the DI and DO pushbuttons and load.	This instruction will clear the latch in the Data Source Board.
Load Latch	Press the SELECT B switch that corresponds to the 1340 circuit card connector that the Data Source Board is installed in. Press the DI and DO pushbuttons and load .	This instruction will load the latch in the Data Source Board. (See Data Source Board instructions for further details concerning the latch.)
Status Check	Press the SELECT A or B of the connector in which the Data Source Board is installed. Load	The status of this board is false only when the contents of the counter is equal to the pushbutton data. Useful for performing a program loop a specific number of times. Once the required number of operations are performed a SKIP instruction allows re-initializing and perhaps a a HALT to statically observe the results of the operations.

Run Program

After a program is stored in the M/P Card's memory, the program can be started by following the procedure listed in Table 4.

TABLE 4

Procedure	Purpose
1. Set the MANUAL/PROG/LOAD switch to MANUAL, then back to PROG.	This action sets the memory counter to the first program step and configures the M/P Card for Programmed operation.
2. Select the desired Clock Source.	Applies the 20 kHz oscillator, 2 MHz oscillator, or external signal to the program counter.
3. Set the DI/MANUAL STROBE/DO switch to either DI or DO.	This action activates the program stored in the M/P Card's memory.
4. First Time Operation	For first time operation of a program, the operator may wish to verify the program sequence visually. If so, skip Step 3 and begin pushing either the DI or DO pushbutton. The SELECT indicators along with the desired DI or DO function will light as the program is stepped along. The operator must remember that the program is actually operational at this time, and that is a status check step is encountered in which the selected READY is false, the program cannot proceed until the READY becomes true. Similarly if a SKIP IF READY or SKIP IF NOT READY instruction is satisfied while single stepping, the following instruction will give no SELECT, DI or DO indication and will zero a HALT or a second skip instruction as well. So it may not be possible to observe what instructions are in parts of the memory under certain conditions. Once proper program operation is verified, return and perform Steps 1, 2, and 3.

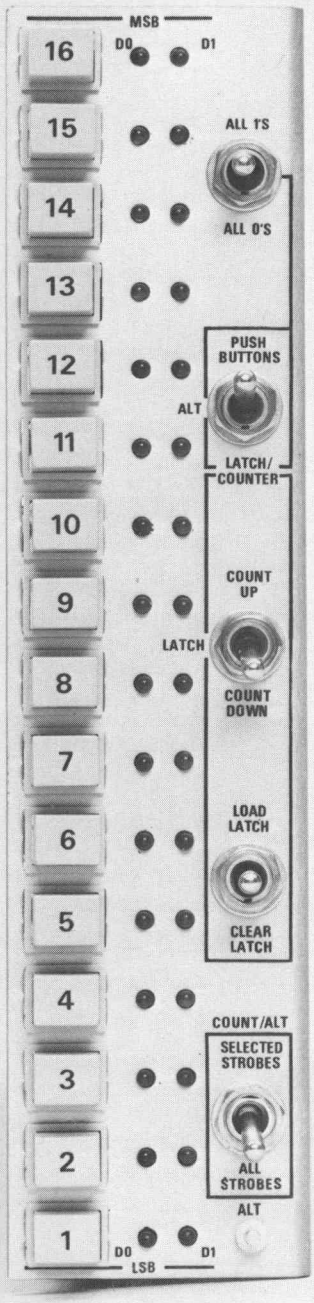

Fig. 4-0. Front Panel of a DATA SOURCE BOARD.

1340 DATA SOURCE BOARD

067–0662–00

The Data Source Board is part of the 1340 Test Set. This board is used to generate 16 bit data words for testing circuit cards installed in the 1340. The board can be installed in any 1340 circuit card connector except J1.

Front Panel Controls

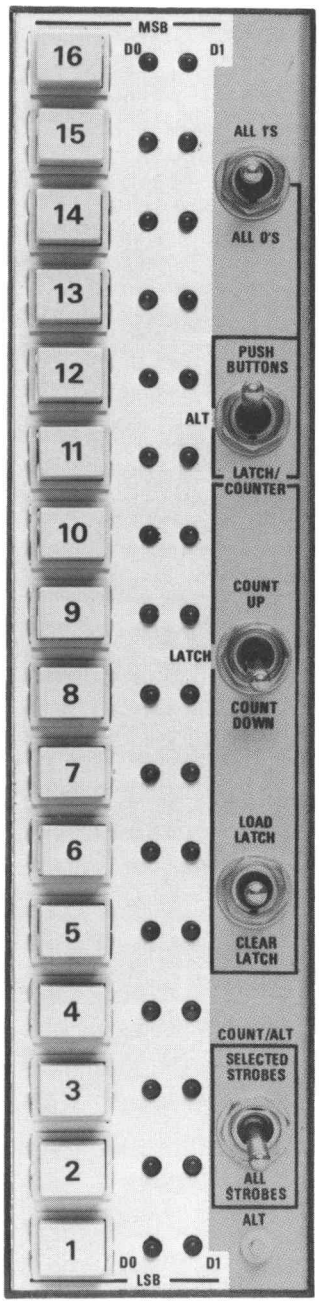

PUSHBUTTONS (1 through 16)

The pushbuttons are used to simulate a 16-Bit word. This word is applied to the input of the Counter-Latch and to either the DO buss, or the DI buss.

Each pushbutton corresponds to one of the 16 lines that make up the DO BUS or DI BUS in the 1340. Pressing a pushbutton will connect its corresponding bus line to chassis ground (True). In the released (out) position, approximately +5 volts is applied to the corresponding line (False).

DO Indicators (1 through 16)

These light emitting diodes (LED's) indicate the logic state of each line on the DO BUS of the 1340. When lighted, a True state (low voltage) on that particular line is indicated.

DI Indicators (1 through 16)

These LED's indicate the logic state of each line on the DI BUS of the 1340.

ALL 1's/ALL 0's

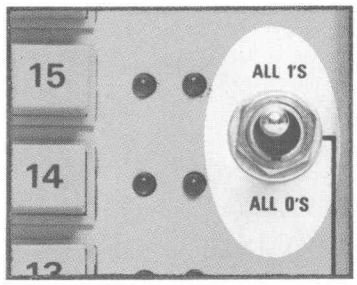

This three position switch is open in the center position (NORMAL). When set to the ALL 1's position, all 16 lines of the selected bus are connected to chassis ground (True). When set to ALL 9's position, all 16 lines of the selected bus are connected to +5 V (False).

PUSHBUTTONS/ALT/LATCH-COUNTER

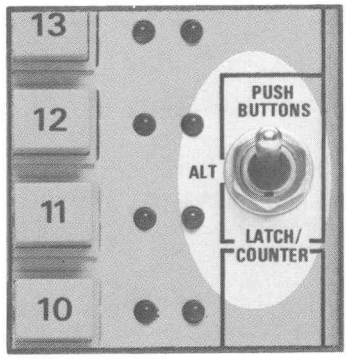

This three position switch is used to select the data source. When set to PUSHBUTTONS, the 16 front panel pushbuttons are selected as the data source.

In the LATCH-COUNTER position, the Latch Counter circuit is the data source. (NOTE: The LATCH-COUNTER circuit function is controlled by the COUNT UP/LATCH/COUNT DOWN and the LOAD LATCH/CLEAR LATCH switches.)

In the ALT position, the data source is alternated between the PUSHBUTTONS and the LATCH-COUNTER circuitry.

COUNT UP/LATCH/ COUNT DOWN

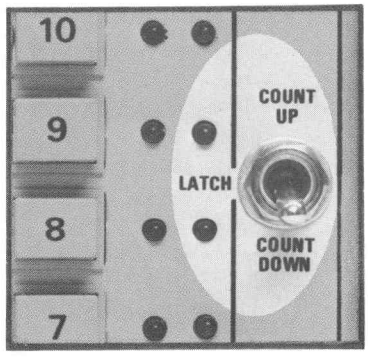

This switch is operative only when the PUSHBUTTONS/ALT/LATCH-COUNTER switch is in the ALT OR LATCH-COUNTER positions. The selections of this switch apply only to the operation of the COUNTER-LATCH circuit. In the COUNT UP position, data is generated in an increasing binary sequence. In the COUNT DOWN position, data is generated in a decreasing binary sequence. In the LATCH position, only the data loaded into the LATCH is outputted, or the last binary word present due to COUNT UP or COUNT DOWN operations prior to putting the switch in the LATCH position.

LOAD LATCH/CLEAR LATCH

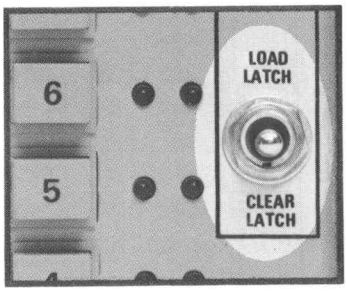

When the LOAD LATCH position is selected, the Counter-Latch circuit is loaded with the Logic level combination (data) that the Push-button switches are set to. The CLEAR LATCH position is used to clear the Counter-Latch circuit to zero.

COUNT/ALT

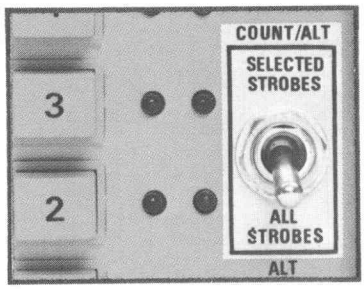

This two position switch is operative only during an ALT mode or COUNT mode of operation. In the ALL STROBES position, all strobes are recognized and the ALT or COUNT mode of operation responds to each strobe. In the SELECTED STROBES position, the circuit card connector in which the 1340 DATA SOURCE Board is installed must be addressed (selected) and strobed (either DI or DO STROBE) in order to advance either the ALT or COUNT mode of operation.

ALT (Trigger Output)

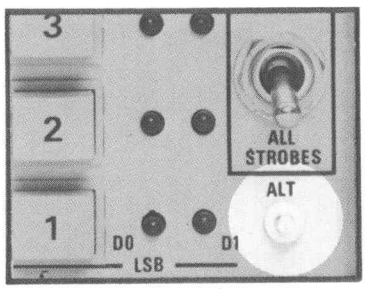

This connector may be used as a triggering input source when the Data Source Board is operated in the ALT mode. By triggering on the positive edge of the output waveform, the COUNTER-LATCH output can be monitored. By triggering on the negative edge, the PUSH-BUTTON output can be monitored.

Internal Controls

These controls are located on the bottom-right side of the board near the front panel.

DI BUS/DO BUS

When this switch is set to the D1 BUS position, the 16-Bit word is applied to the D1 BUS. In the DO BUS position, the 16-Bit word is applied to the DO BUS.

RESET ON COMPARE/NORMAL

This switch is operative when the COUNTER switch is in the COUNT UP or COUNT DOWN position. When set to RESET ON COMPARE, the COUNTER-LATCH will count to the binary number set on the pushbutton and then reset to zero and repeat the count cycle. When set to Normal, the COUNTER-LATCH will count all 16 data bits in a binary sequence. When the count reaches 2^{16} (65535) the counter resets and then repeats the counting sequence.

SELECT ENABLES DATA/ NORMAL

When this switch is set to the SELECT ENABLES DATA position, the DATA SOURCE BOARD outputs the 16-Bit word to the selected 1340 bus only when addressed (selected). In the NORMAL position, data is always applied to the bus. This allows the use of more than one DATA SOURCE board, or some other data source.

PROGRAMMABLE Functions

The functions, LOAD LATCH and CLEAR LATCH, can be programmed in addition to being selected by the front panel switch. To program LOAD LATCH, activate the 1340 Select line B of the connector (J2-J12) that the DATA SOURCE Board is installed in. Then activate both DO and DI strobes. All three commands must be sent simultaneously. To program CLEAR LATCH, activate the select line A of the connector the DATA SOURCE Board is installed in and activate both DO and DI strobes. All three commands must be sent simultaneously.

APPLICATIONS

This performance check for a general purpose 1340 interface card is included for the purpose of presenting an example of how to use the 1340 Test Set.

NOTE

Two other instruction manuals,

070-3091-00 Reference Signal Interface and
070-3057-00 Waveform Digitizer,

contain Performance Check and Calibration procedures that use the 1340 Test Set.

PERFORMANCE CHECK

The Performance Check is a means of verifying that all 32-Bit Output card functions operate properly. The 32-Bit Output card needs a performance check only if a malfunction is experienced or if a repair has been made.

Test Equipment

Quantity	Description	TEKTRONIX Part No.
1	Oscilloscope, general purpose, minimum deflection factor of 5 mV/div, bandwidth of DC to 10 MHz. TEKTRONIX Type 453 recommended.	
1	X10 passive probe.	010-6054-00
1	1340 Data Coupler.	
1	Cable, interconnecting.	012-0131-00
1	1340 Manual-Programmable Card Selector.	067-0661-00
1	1340 Data Source.	067-0662-00
1	1340 Program Data Indicator.	067-0663-00
1	1340 Circuit Card extender.	670-1263-00

1. Buffer Outputs, Echo Checks, and Strap 3 Options (S3A, S3B, S3C, and S3D)

a. Install the Manual-Programmable Card Selector in the 1340 J1 connector.

b. Install the Data Source card in the 1340 J2 connector.

c. Install the 1340 circuit card extender in the 1340 J7 connector.

d. Plug the 32-Bit Output card into the extender socket.

e. Connect the Program Data Indicator to the 1340 connector J302A with cable 012-0131-00.

f. Connect the Program Data Indicator +5 V lead to a convenient 1340 +5 V tiepoint (the MODE switch at the junction of the three 1 kΩ resistors).

g. On 1340 Manual-Programmable Card Selector, press SELECT A7 switch; move HOLD/PULSE switch (located on lower right side of circuit card) to PULSE.

h. Make the following presets on the 1340 Data Source card:

1. PUSHBUTTON-ALT-LATCH/COUNTER switch to PUSHBUTTON,

2. ALL 0's-NORMAL-ALL 1's switch to NORMAL,

3. COUNT/ALL switch to ALL (count all strobes),

4. SELECT ENABLES DATA/NORMAL switch to NORMAL,

5. DI BUS/DO BUS switch (located on lower right side of circuit card) to DO BUS.

i. Press Data switch 1 (on Data Source card), check that DO lamp 1 lights. Press $\overline{\text{DO STROBE}}$ switch (on Manual-Programmable Card Selector), check that DI lamp 1 lights, and that A1 indicator lamp on the program Data Indicator lights.

j. Repeat step i for Data switches 2 through 16. Verify that only the appropriate DO lamp, DI lamp, and Program Data Indicator A lamp is on for each condition.

k. Repeat steps g, h, i, and j with $\overline{\text{SELECT}}$ B7 switch pressed; verify readout of B Program Data Indicator lamps.

l. Press $\overline{\text{SELECT}}$ A7 (Manual-Programmable Card Selector) and Data 4 switch.

m. Press $\overline{\text{DO STROBE}}$.

n. Short S3D, check that Program Data Indicator lamp 4A lights. Remove short.

o. Short S3C, check that Program Data Indicator lamp 3B lights. Remove short.

p. Release Data 4 switch and push $\overline{\text{DO STROBE}}$ switch.

q. Press $\overline{\text{SELECT}}$ B7 and Data 3 switch.

r. Press $\overline{\text{DO STROBE}}$.

s. Short S3A, check that Program Data Indicator lamp 3B lights. Remove short.

t. Short S3B, check that Program Data Indicator lamp 4A lights. Remove short.

2. REMOTE ENABLE Strapping Option (Straps S2A, S20A, S2B, and S20B)

a. Set the ALL 1's/ALL 0's switch (on Data Source card) to ALL 1's.

b. Press $\overline{\text{SELECT}}$ B7, then press the $\overline{\text{DO STROBE}}$ switch.

c. Press $\overline{\text{SELECT}}$ A7, then press the $\overline{\text{DO STROBE}}$ switch.

NOTE

All 32 Program Data Indicator lamps should light, except lamps 3B and 4A if all S3 strap options are left out.

d. Check Strap S2B function by installing a short in S2B and verifying that Remote Enable 2 (on the Program Data Indicator) will turn off the B row of data lamps. Also, check that the B7 $\overline{\text{Ready}}$ indicator extinguishes when the B data is off. Check that Remote Enable 1 has no effect.

e. Remove Strap S2B and install Strap S2A. Repeat step D, verifying that Remote Enable 1 has control of the B data lamps.

f. Remove Strap S2A and install Strap S20B. Check that Remote Enable 2 (on the Program Data Indicator) turns off the A data lamps. Verify that the A7 Ready indicator extinguishes when the A data is off.

g. Remove Strap S20B and install Strap S20A. Repeat step f, verifying that Remote Enable 1 has control of the A data lamps.

3. Power On Condition

a. Set ALL 1's/ALL 0's switch to ALL 1's.

b. Turn power Off for 5 seconds, then turn power On.

c. Check that all Program Data Indicator lamps are off.

4. TRIGGER and CLEAR Pulses (Nominally 1 μsec ±30%)

a. Connect the oscilloscope probe to card extender pin A42. Install shorting strap S10B. Press the $\overline{\text{SELECT}}$ A7 switch.

b. Monitor the oscilloscope for a 1 μsec pulse (negative-going) when the $\overline{\text{DO STROBE}}$ switch is pressed.

c. Put a shorting strap in S40. Check for a positive level of +4 V at A42, with no pulse when the DO STROBE switch is pressed. Remove Strap S40 and Strap S10B.

d. Short S1B. Press $\overline{\text{SELECT}}$ B7 and then press the DO STROBE switch. Check for a 1 μsec negative pulse at A42.

e. Short S4 and check for a positive level of about 4 V at pin A42 with no pulse when the $\overline{\text{DO STROBE}}$ switch is pressed. Remove straps S1B and S4.

5. Install Strap Options Required for Current Application.

ELECTRICAL REPLACEABLE PARTS LIST

PARTS ORDERING INFORMATION

Replacement parts are available from or through your local Tektronix, Inc. Field Office or representative.

Changes to Tektronix instruments are sometimes made to accommodate improved components as they become available, and to give you the benefit of the latest circuit improvements developed in our engineering department. It is therefore important, when ordering parts, to include the following information in your order: Part number, instrument type or number, serial number, and modification number if applicable.

If a part you have ordered has been replaced with a new or improved part, your local Tektronix, Inc. Field Office or representative will contact you concerning any change in part number.

Change information, if any, is located at the rear of this manual.

SPECIAL NOTES AND SYMBOLS

X000	Part first added at this serial number
00X	Part removed after this serial number

ITEM NAME

In the Parts List, an Item Name is separated from the description by a colon (:). Because of space limitations, an Item Name may sometimes appear as incomplete. For further Item Name identification, the U.S. Federal Cataloging Handbook H6-1 can be utilized where possible.

ABBREVIATIONS

ACTR	ACTUATOR	PLSTC	PLASTIC
ASSY	ASSEMBLY	QTZ	QUARTZ
CAP	CAPACITOR	RECP	RECEPTACLE
CER	CERAMIC	RES	RESISTOR
CKT	CIRCUIT	RF	RADIO FREQUENCY
COMP	COMPOSITION	SEL	SELECTED
CONN	CONNECTOR	SEMICOND	SEMICONDUCTOR
ELCTLT	ELECTROLYTIC	SENS	SENSITIVE
ELEC	ELECTRICAL	SEP	SEPARATELY
FXD	FIXED	VAR	VARIABLE
INCAND	INCANDESCENT	WW	WIREWOUND
LED	LIGHT EMITTING DIODE	XFMR	TRANSFORMER
NONWIR	NON WIREWOUND	XTAL	CRYSTAL

067-0661-00

Ckt. No.	Tektronix Part No.	Serial/Model No. Eff	Disc	Description
ASSEMBLY				
	670-2738-00			CKT CARD ASSY: MAN PROG SELECTOR
C111	283-0177-00			CAP, FXD, CER DI: 1 μF, +80-20%, 25 V
C131	283-0177-00			CAP, FXD, CER DI: 1 μF, +80-20%, 25 V
C181	283-0177-00			CAP, FXD, CER DI: 1 μF, +80-20%, 25 V
C261	283-0177-00			CAP, FXD, CER DI: 1 μF, +80-20%, 25 V
C341	283-0047-00			CAP, FXD, CER DI: 47 μF, 20%, 50 V
C351	283-0060-00			CAP, FXD, CER DI: 100 pF, 5%, 200 V
C421	283-0177-00			CAP, FXD, CER DI: 1 μF, +80-20%, 25 V
C441	283-0177-00			CAP, FXD, CER DI: 1 μF, +80-20%, 25 V
C461	283-0060-00			CAP, FXD, CER DI: 100 pF, 5%, 200 V
C511	283-0177-00			CAP, FXD, CER DI: 1 μF, +80-20%, 25 V
C551	283-0000-00			CAP, FXD, CER DI: 0.001 μF, +100-0%, 500 V
C552	283-0000-00			CAP, FXD, CER DI: 0.001 μF, +100-0%, 500 V
C661	283-0177-00			CAP, FXD, CER DI: 1 μF, +80-20%, 25 V
C711	283-0177-00			CAP, FXD, CER DI: 1 μF, +80-20%, 25 V
C741	290-0530-00			CAP, FXD, ELCTLT: 68 μF, 20%, 6 V
C742	290-0536-00			CAP, FXD, ELCTLT: 10 μF, 20%, 25 V
C751	283-0204-00			CAP, FXD, CER DI: 0.01 μF, 20%, 50 V
C752	283-0110-00			CAP, FXD, CER DI: 0.005 μF, +80-20%, 150 V
C753	283-0204-00			CAP, FXD, CER DI: 0.01 μF, 20%, 50 V
C771	283-0204-00			CAP, FXD, CER DI: 0.01 μF, 20%, 50 V
C772	283-0060-00			CAP, FXD, CER DI: 100 pF, 5%, 200 V
C773	283-0177-00			CAP, FXD, CER DI: 1 μF, +80-20%, 25 V
CR680	152-0141-02			SEMICOND DEVICE: SILICON, 30 V, 150 MA
DS12	150-1004-00			LAMP, LED: RED, 2.5 V, 15 MA
DS13	150-1004-00			LAMP, LED: RED, 2.5 V, 15 MA
DS14	150-1004-00			LAMP, LED: RED, 2.5 V, 15 MA
DS15	150-1004-00			LAMP, LED: RED, 2.5 V, 15 MA
DS16	150-1004-00			LAMP, LED: RED, 2.5 V, 15 MA
DS17	150-1004-00			LAMP, LED: RED, 2.5 V, 15 MA
DS18	150-1004-00			LAMP, LED: RED, 2.5 V, 15 MA
DS19	150-1004-00			LAMP, LED: RED, 2.5 V, 15 MA
DS20	150-1004-00			LAMP, LED: RED, 2.5 V, 15 MA
DS21	150-1004-00			LAMP, LED: RED, 2.5 V, 15 MA
DS22	150-1004-00			LAMP, LED: RED, 2.5 V, 15 MA
DS32	150-1004-00			LAMP, LED: RED, 2.5 V, 15 MA
DS33	150-1004-00			LAMP, LED: RED, 2.5 V, 15 MA
DS34	150-1004-00			LAMP, LED: RED, 2.5 V, 15 MA
DS35	150-1004-00			LAMP, LED: RED, 2.5 V, 15 MA
DS36	150-1004-00			LAMP, LED: RED, 2.5 V, 15 MA

067-0661-00 (cont)

Ckt. No.	Tektronix Part No.	Serial/Model No. Eff	Disc	Description
DS37	150-1004-00			LAMP, LED: RED, 2.5 V, 15 MA
DS38	150-1004-00			LAMP, LED: RED, 2.5 V, 15 MA
DS39	150-1004-00			LAMP, LED: RED, 2.5 V, 15 MA
DS40	150-1004-00			LAMP, LED: RED, 2.5 V, 15 MA
DS41	150-1004-00			LAMP, LED: RED, 2.5 V, 15 MA
DS42	150-1004-00			LAMP, LED: RED, 2.5 V, 15 MA
J100	131-0282-00			CONN, RCPT, ELEC:
Q18	151-0190-00			TRANSISTOR: SILICON, NPN, 2N3904
Q63	151-0223-00			TRANSISTOR: SILICON, NPN, S24848
Q64	151-0223-00			TRANSISTOR: SILICON, NPN, S24848
Q68	151-0223-00			TRANSISTOR: SILICON, NPN, S24848
Q73	151-0190-00			TRANSISTOR: SILICON, NPN, 2N3904
Q74	151-0190-00			TRANSISTOR: SILICON, NPN, 2N3904
R151	315-0102-00			RES, FXD, COMP: 1 K OHM, 5%, 0.25 W
R181	315-0102-00			RES, FXD, COMP: 1 K OHM, 5%, 0.25 W
R182	315-0102-00			RES, FXD, COMP: 1 K OHM, 5%, 0.25 W
R183	315-0621-00			RES, FXD, COMP: 620 OHM, 5%, 0.25 W
R341	315-0221-00			RES, FXD, COMP: 220 OHM, 5%, 0.25 W
R351	315-0222-00			RES, FXD, COMP: 2.2 K OHM, 5%, 0.25 W
R352	315-0222-00			RES, FXD, COMP: 2.2 K OHM, 5%, 0.25 W
R353	315-0621-00			RES, FXD, COMP: 620 OHM, 5%, 0.25 W
R372	315-0621-00			RES, FXD, COMP: 620 OHM, 5%, 0.25 W
R373	315-0621-00			RES, FXD, COMP: 620 OHM, 5%, 0.25 W
R374	315-0621-00			RES, FXD, COMP: 620 OHM, 5%, 0.25 W
R375	315-0621-00			RES, FXD, COMP: 620 OHM, 5%, 0.25 W
R376	315-0621-00			RES, FXD, COMP: 620 OHM, 5%, 0.25 W
R377	315-0621-00			RES, FXD, COMP: 620 OHM, 5%, 0.25 W
R378	315-0621-00			RES, FXD, COMP: 620 OHM, 5%, 0.25 W
R379	315-0621-00			RES, FXD, COMP: 620 OHM, 5%, 0.25 W
R461	315-0222-00			RES, FXD, COMP: 2.2 K OHM, 5%, 0.25 W
R481	315-0621-00			RES, FXD, COMP: 620 OHM, 5%, 0.25 W
R531	315-0621-00			RES, FXD, COMP: 620 OHM, 5%, 0.25 W
R532	315-0621-00			RES, FXD, COMP: 620 OHM, 5%, 0.25 W
R533	315-0621-00			RES, FXD, COMP: 620 OHM, 5%, 0.25 W
R534	315-0621-00			RES, FXD, COMP: 620 OHM, 5%, 0.25 W
R535	315-0621-00			RES, FXD, COMP: 620 OHM, 5%, 0.25 W
R536	315-0621-00			RES, FXD, COMP: 620 OHM, 5%, 0.25 W
R537	315-0621-00			RES, FXD, COMP: 620 OHM, 5%, 0.25 W
R538	315-0621-00			RES, FXD, COMP: 620 OHM, 5%, 0.25 W
R541	315-0102-00			RES, FXD, COMP: 1 K OHM, 5%, 0.25 W

067-0661-00 (cont)

Ckt. No.	Tektronix Part No.	Serial/Model No. Eff	Disc	Description
R542	315-0621-00			RES, FXD, COMP: 620 OHM, 5%, 0.25 W
R543	315-0621-00			RES, FXD, COMP: 620 OHM, 5%, 0.25 W
R551	315-0101-00			RES, FXD, COMP: 100 OHM, 5%, 0.25 W
R552	315-0101-00			RES, FXD, COMP: 100 OHM, 5%, 0.25 W
R561	315-0222-00			RES, FXD, COMP: 2.2 K OHM, 5%, 0.25 W
R581	315-0472-00			RES, FXD, COMP: 4.7 K OHM, 5%, 0.25 W
R582	315-0472-00			RES, FXD, COMP: 4.7 K OHM, 5%, 0.25 W
R583	315-0621-00			RES, FXD, COMP: 620 OHM, 5%, 0.25 W
R631	315-0621-00			RES, FXD, COMP: 620 OHM, 5%, 0.25 W
R632	315-0621-00			RES, FXD, COMP: 620 OHM, 5%, 0.25 W
R633	315-0621-00			RES, FXD, COMP: 620 OHM, 5%, 0.25 W
R634	315-0621-00			RES, FXD, COMP: 620 OHM, 5%, 0.25 W
R635	315-0621-00			RES, FXD, COMP: 620 OHM, 5%, 0.25 W
R636	315-0621-00			RES, FXD, COMP: 620 OHM, 5%, 0.25 W
R641	315-0102-00			RES, FXD, COMP: 1 K OHM, 5%, 0.25 W
R642	315-0103-00			RES, FXD, COMP: 10 K OHM, 5%, 0.25 W
R643	315-0472-00			RES, FXD, COMP: 4.7 K OHM, 5%, 0.25 W
R644	315-0472-00			RES, FXD, COMP: 4.7 K OHM, 5%, 0.25 W
R645	315-0472-00			RES, FXD, COMP: 4.7 K OHM, 5%, 0.25 W
R681	315-0101-00			RES, FXD, COMP: 100 OHM, 5%, 0.25 W
R682	315-0101-00			RES, FXD, COMP: 100 OHM, 5%, 0.25 W
R683	315-0471-00			RES, FXD, COMP: 470 OHM, 5%, 0.25 W
R684	315-0471-00			RES, FXD, COMP: 470 OHM, 5%, 0.25 W
R685	315-0101-00			RES, FXD, COMP: 100 OHM, 5%, 0.25 W
R686	315-0472-00			RES, FXD, COMP: 4.7 K OHM, 5%, 0.25 W
R730	315-0102-00			RES, FXD, COMP: 1 K OHM, 5%, 0.25 W
R731	315-0621-00			RES, FXD, COMP: 620 OHM, 5%, 025. W
R732	315-0621-00			RES, FXD, COMP: 620 OHM, 5%, 0.25 W
R733	315-0621-00			RES, FXD, COMP: 620 OHM, 5%, 0.25 W
R734	315-0621-00			RES, FXD, COMP: 620 OHM, 5%, 0.25 W
R735	315-0621-00			RES, FXD, COMP: 620 OHM, 5%, 0.25 W
R736	315-0621-00			RES, FXD, COMP: 620 OHM, 5%, 0.25 W
R737	315-0621-00			RES, FXD, COMP: 620 OHM, 5%, 0.25 W
R738	315-0621-00			RES, FXD, COMP: 620 OHM, 5%, 0.25 W
R741	315-0472-00			RES, FXD, COMP: 4.7 K OHM, 5%, 0.25 W
R742	315-0104-00			RES, FXD, COMP: 100 K OHM, 5%, 0.25 W
R743	315-0472-00			RES, FXD, COMP: 4.7 K OHM, 5%, 0.25 W
R751	315-0223-00			RES, FXD, COMP: 22 K OHM, 5%, 0.25 W
R752	315-0271-00			RES, FXD, COMP: 270 OHM, 5%, 0.25 W
R753	315-0223-00			RES, FXD, COMP: 22 K OHM, 5%, 0.25 W
R761	311-1267-00			RES, VAR, NONWIR: 5 K OHM, 10%, 0.5 W
R762	311-1267-00			RES, VAR, NONWIR: 5 K OHM, 10%, 0.5 W

067-0661-00 (cont)

Ckt. No.	Tektronix Part No.	Serial/Model No. Eff	Disc	Description
R781	315-0472-00			RES, FXD, COMP: 4.7 K OHM, 5%, 0.25 W
R782	315-0472-00			RES, FXD, COMP: 4.7 K OHM, 5%, 0.25 W
R783	315-0472-00			RES, FXD, COMP: 4.7 K OHM, 5%, 0.25 W
R784	315-0472-00			RES, FXD, COMP: 4.7 K OHM, 5%, 0.25 W
R785	315-0472-00			RES, FXD, COMP: 4.7 K OHM, 5%, 0.25 W
R786	315-0472-00			RES, FXD, COMP: 4.7 K OHM, 5%, 0.25 W
S1	260-0735-00			SWITCH, PUSH: SPST
S2	260-1485-00			SWITCH, TOGGLE: SPDT, 5A, 115 V, CENTER OFF
S3	260-0614-00			SWITCH, TOGGLE: DPDT
S4A	260-1551-00			SWITCH, PUSH: 11 POSITION, TOP
S4B	260-1552-00			SWITCH, PUSH: 11 POSITION, BOTTOM
S5	260-1285-00			SWITCH, PUSH: SPDT MOMENTARY
S7	260-1285-00			SWITCH, PUSH: SPDT MOMENTARY
S8	260-1206-00			SWITCH, TOGGLE: SPDT, 5A, 115 V, CENTER OFF
S9	260-1206-00			SWITCH, TOGGLE: SPDT, 5A, 155 V, CENTER OFF
S10	260-0960-01			SWITCH, SLIDE: 0.5 A, 120 V
U11	156-0075-00			INTEGRATED CKT: 8-BIT DATA SEL, SN74151D
U12	156-0075-00			INTEGRATED CKT: 8-BIT DATA SEL, SN74151D
U13	156-0058-00			INTEGRATED CKT: HEX INVERTER, SN7404N
U14	156-0057-00			INTEGRATED CKT: QUAD 2-INPUT NAND GATE, SN7401N
U15	156-0030-00			INTEGRATED CKT: 2-INPUT NAND GATE, SN7400N
U16	156-0199-00			INTEGRATED CKT: 6-BIT ACCESS MEM, N8225B
U17	156-0034-00			INTEGRATED CKT: DUAL 4-INPUT NAND GATE, SN7420N
U18	156-0219-00			INTEGRATED CKT: 8-INPUT ENCODER, 9318
U21	156-0075-00			INTEGRATED CKT: 8-BIT DATA SEL, SN74151D
U22	156-0075-00			INTEGRATED CKT: 8-BIT DATA SEL, SN74151D
U23	156-0058-00			INTEGRATED CKT: HEX INVERTER, SN7404N
U24	156-0057-00			INTEGRATED CKT: QUAD 2-INPUT NAND GATE, SN7401N
U25	156-0030-00			INTEGRATED CKT: 2-INPUT NAND GATE, SN7400N
U26	156-0199-00			INTEGRATED CKT: 6-BIT ACCESS MEM, N8225B
U28	156-0219-00			INTEGRATED CKT: 8-INPUT ENCODER, 9318
U31	156-0078-00			INTEGRATED CKT: 4 to 16 LINE DECODER, SN7415N
U33	156-0078-00			INTEGRATED CKT: 4 to 16 LINE DECODER, SN7415N
U34	156-0036-00			INTEGRATED CKT: DUAL 4-INPUT BUFFER, SN7440N
U35	156-0043-00			INTEGRATED CKT: 2-INPUT NOR GATE, SN7402N
U36	156-0089-00			INTEGRATED CKT: SYNC 4-BIT UP/DOWN CNTR, SN74193N
U37	156-0199-00			INTEGRATED CKT: 6-BIT ACCESS MEM, N8225B
U38	156-0043-00			INTEGRATED CKT: 2-INPUT NOR GATE, SN7402N
U44	156-0043-00			INTEGRATED CKT: 2-INPUT NOR GATE, SN7402N

067-0661-00 (cont)

Ckt. No.	Tektronix Part No.	Serial/Model No. Eff	Disc	Description
U45	156-0083-00			INTEGRATED CKT: 4-BIT SHIFT REGISTER, 9300
U46	156-0030-00			INTEGRATED CKT: 2-INPUT NAND GATE, SN7400N
U47	156-0030-00			INTEGRATED CKT: 2-INPUT NAND GATE, SN7400N
U48	156-0098-00			INTEGRATED CKT: DUAL 4 TO 1 LINE DATA SEL, SN74153N
U51	156-0125-00			INTEGRATED CKT: QUAD 2-INPUT MULTIPLEX, SN74192N
U52	156-0125-00			INTEGRATED CKT: QUAD 2-INPUT MULTIPLEX, SN74192N
U54	156-0030-00			INTEGRATED CKT: 2-INPUT NAND GATE, SN7400N
U55	156-0150-00			INTEGRATED CKT: QUAD 2-INPUT NAND BUFFER, SN7437N
U56	156-0041-00			INTEGRATED CKT: DUAL D-TYPE FLIP-FLOP, SN7474N
U57	156-0030-00			INTEGRATED CKT: 2-INPUT NAND GATE, SN7400N
U58	156-0030-00			INTEGRATED CKT: 2-INPUT NAND GATE, SN7400N
U61	156-0125-00			INTEGRATED CKT: QUAD 2-INPUT MULTIPLEX, SN74192N
U62	156-0125-00			INTEGRATED CKT: QUAD 2-INPUT MULTIPLEX, SN74192N
U65	156-0199-00			INTEGRATED CKT: 6-BIT ACCESS MEM, N8225B
U66	156-0058-00			INTEGRATED CKT: HEX INVERTER, SN7404N
U67	156-0043-00			INTEGRATED CKT: 2-INPUT NOR GATE, SN7402N
U68	156-0043-00			INTEGRATED CKT: 2-INPUT NOR GATE, SN7402N
U71	156-0125-00			INTEGRATED CKT: QUAD 2-INPUT MULTIPLEX, SN74192N
U72	156-0125-00			INTEGRATED CKT: QUAD 2-INPUT MULTIPLEX, SN74192N
U76	156-0172-00			INTEGRATED CKT: DUAL RETRIG MULTIVIBRATOR, SN74123
U77	156-0121-00			INTEGRATED CKT: DUAL CONTROLLED MULTIVIBRATOR, MC4024

067-0662-00

Ckt. No.	Tektronix Part No.	Serial/Model No. Eff	Disc	Description
ASSEMBLY				
	670-2722-00			CKT CARD ASSY: DATA SOURCE
C111	283-0177-00			CAP, FXD, CER DI: 1 μF, +80-20%, 25 V
C411	283-0177-00			CAP, FXD, CER DI: 1 μF, +80-20%, 25 V
C421	283-0177-00			CAP, FXD, CER DI: 1 μF, +80-20%, 25 V
C431	283-0177-00			CAP, FXD, CER DI: 1 μF, +80-20%, 25 V
C441	283-0177-00			CAP, FXD, CER DI: 1 μF, +80-20%, 25 V
C451	283-0177-00			CAP, FXD, CER DI: 1 μF, +80-20%, 25 V
C461	283-0177-00			CAP, FXD, CER DI: 1 μF, +80-20%, 25 V
C511	283-0060-00			CAP, FXD, CER DI: 100 pF, 5%, 200 V
C512	283-0060-00			CAP, FXD, CER DI: 100 pF, 5%, 200 V
C521	283-0177-00			CAP, FXD, CER DI: 1 μF, +80-20%, 25 V
C541	283-0047-00			CAP, FXD, CER DI: 270 pF, 5%, 500 V
DS1	150-1004-00			LAMP, LED: RED, 2.5 V, 15 MA
DS2	150-1004-00			LAMP, LED: RED, 2.5 V, 15 MA
DS3	150-1004-00			LAMP, LED: RED, 2.5 V, 15 MA
DS4	150-1004-00			LAMP, LED: RED, 2.5 V, 15 MA
DS5	150-1004-00			LAMP, LED: RED, 2.5 V, 15 MA
DS6	150-1004-00			LAMP, LED: RED, 2.5 V, 15 MA
DS7	150-1004-00			LAMP, LED: RED, 2.5 V, 15 MA
DS8	150-1004-00			LAMP, LED: RED, 2.5 V, 15 MA
DS9	150-1004-00			LAMP, LED: RED, 2.5 V, 15 MA
DS10	150-1004-00			LAMP, LED: RED, 2.5 V, 15 MA
DS11	150-1004-00			LAMP, LED: RED, 2.5 V, 15 MA
DS12	150-1004-00			LAMP, LED: RED, 2.5 V, 15 MA
DS13	150-1004-00			LAMP, LED: RED, 2.5 V, 15 MA
DS14	150-1004-00			LAMP, LED; RED, 2.5 V, 15 MA
DS15	150-1004-00			LAMP, LED: RED, 2.5 V, 15 MA
DS16	150-1004-00			LAMP, LED: RED, 2.5 V, 15 MA
DS21	150-1004-00			LAMP, LED: RED, 2.5 V, 15 MA
DS22	150-1004-00			LAMP, LED: RED, 2.5 V, 15 MA
DS23	150-1004-00			LAMP, LED: RED, 2.5 V, 15 MA
DS24	150-1004-00			LAMP, LED: RED, 2.5 V, 15 MA
DS25	150-1004-00			LAMP, LED: RED, 2.5 V, 15 MA
DS26	150-1004-00			LAMP, LED: RED, 2.5 V, 15 MA
DS27	150-1004-00			LAMP, LED: RED, 2.5 V, 15 MA
DS28	150-1004-00			LAMP, LED: RED, 2.5 V, 15 MA
DS29	150-1004-00			LAMP, LED: RED, 2.5 V, 15 MA
DS30	150-1004-00			LAMP, LED: RED, 2.5 V, 15 MA
DS31	150-1004-00			LAMP, LED: RED, 2.5 V, 15 MA
DS32	150-1004-00			LAMP, LED: RED, 2.5 V, 15 MA
DS33	150-1004-00			LAMP, LED: RED, 2.5 V, 15 MA
DS34	150-1004-00			LAMP, LED: RED, 2.5 V, 15 MA

067-0662-00 (cont)

Ckt. No.	Tektronix Part No.	Serial/Model No. Eff	Disc	Description
DS35	150-1004-00			LAMP, LED: RED, 2.5 V, 15 MA
DS36	150-1004-00			LAMP, LED: RED, 2.5 V, 15 MA
Q51	151-0223-00			TRANSISTOR: SILICON, NPN, 2N4275
Q52	151-0223-00			TRANSISTOR: SILICON, NPN, 2N4275
Q57	151-0223-00			TRANSISTOR: SILICON, NPN, 2N4275
R111	315-0751-00			RES, FXD, COMP: 750 OHM, 5%, 0.25 W
R112	315-0751-00			RES, FXD, COMP: 750 OHM, 5%, 0.25 W
R113	315-0751-00			RES, FXD, COMP: 750 OHM, 5%, 0.25 W
R114	315-0751-00			RES, FXD, COMP: 750 OHM, 5%, 0.25 W
R121	315-0751-00			RES, FXD, COMP: 750 OHM, 5%, 0.25 W
R122	315-0751-00			RES, FXD, COMP: 750 OHM, 5%, 0.25 W
R123	315-0751-00			RES, FXD, COMP: 750 OHM, 5%, 0.25 W
R124	315-0751-00			RES, FXD, COMP: 750 OHM, 5%, 0.25 W
R141	315-0102-00			RES, FXD, COMP: 1 K OHM, 5%, 0.25 W
R211	315-0751-00			RES, FXD, COMP: 750 OHM, 5%, 0.25 W
R212	315-0751-00			RES, FXD, COMP: 750 OHM, 5%, 0.25 W
R213	315-0751-00			RES, FXD, COMP: 750 OHM, 5%, 0.25 W
R214	315-0751-00			RES, FXD, COMP: 750 OHM, 5%, 0.25 W
R221	315-0751-00			RES, FXD, COMP: 750 OHM, 5%, 0.25 W
R222	315-0751-00			RES, FXD, COMP: 750 OHM, 5%, 0.25 W
R223	315-0751-00			RES, FXD, COMP: 750 OHM, 5%, 0.25 W
R224	315-0751-00			RES, FXD, COMP: 750 OHM, 5%, 0.25 W
R241	315-0102-00			RES, FXD, COMP: 1 K OHM, 5%, 0.25 W
R311	315-0751-00			RES, FXD, COMP: 750 OHM, 5%, 0.25 W
R312	315-0751-00			RES, FXD, COMP: 750 OHM, 5%, 0.25 W
R313	315-0751-00			RES, FXD, COMP: 750 OHM, 5%, 0.25 W
R314	315-0751-00			RES, FXD, COMP: 750 OHM, 5%, 0.25 W
R321	315-0751-00			RES, FXD, COMP: 750 OHM, 5%, 0.25 W
R322	315-0751-00			RES, FXD, COMP: 750 OHM, 5%, 0.25 W
R323	315-0751-00			RES, FXD, COMP: 750 OHM, 5%, 0.25 W
R324	315-0751-00			RES, FXD, COMP: 750 OHM, 5%, 0.25 W
R341	315-0102-00			RES, FXD, COMP: 1 K OHM, 5%, 0.25 W
R361	315-0102-00			RES, FXD, COMP: 1 K OHM, 5%, 0.25 W
R411	315-0102-00			RES, FXD, COMP: 1 K OHM, 5%, 0.25 W
R412	315-0751-00			RES, FXD, COMP: 750 OHM, 5%, 0.25 W
R413	315-0751-00			RES, FXD, COMP: 750 OHM, 5%, 0.25 W
R414	315-0751-00			RES, FXD, COMP: 750 OHM, 5%, 0.25 W
R415	315-0751-00			RES, FXD, COMP: 750 OHM, 5%, 0.25 W
R422	315-0751-00			RES, FXD, COMP: 750 OHM, 5%, 0.25 W
R423	315-0751-00			RES, FXD, COMP: 750 OHM, 5%, 0.25 W
R424	315-0751-00			RES, FXD, COMP: 750 OHM, 5%, 0.25 W

067-0662-00 (cont)

Ckt. No.	Tektronix Part No.	Serial/Model No. Eff	Disc	Description
R421	315-0102-00			RES, FXD, COMP: 750 OHM, 5%, 0.25 W
R425	315-0751-00			RES, FXD, COMP: 1 K OHM, 5%, 0.25 W
R441	315-0102-00			RES, FXD, COMP: 1 K OHM, 5%, 0.25 W
R461	315-0102-00			RES, FXD, COMP: 1 K OHM, 5%, 0.25 W
R462	315-0102-00			RES, FXD, COMP: 1 K OHM, 5%, 0.25 W
R463	315-0102-00			RES, FXD, COMP: 1 K OHM, 5%, 0.25 W
R511	315-0102-00			RES, FXD, COMP: 1 K OHM, 5%, 0.25 W
R512	315-0102-00			RES, FXD, COMP: 1 K OHM, 5%, 0.25 W
R513	315-0102-00			RES, FXD, COMP: 1 K OHM, 5%, 0.25 W
R514	315-0102-00			RES, FXD, COMP: 1 K OHM, 5%, 0.25 W
R515	315-0102-00			RES, FXD, COMP: 1 K OHM, 5%, 0.25 W
R516	315-0101-00			RES, FXD, COMP; 100 OHM, 5%, 0.25 W
R521	315-0102-00			RES, FXD, COMP: 1 K OHM, 5%, 0.25 W
R522	315-0102-00			RES, FXD, COMP: 1 K OHM, 5%, 0.25 W
R523	315-0471-00			RES, FXD, COMP: 470 OHM, 5%, 0.25 W
R531	315-0102-00			RES, FXD, COMP: 1 K OHM, 5%, 0.25 W
R532	315-0102-00			RES, FXD, COMP: 1 K OHM, 5%, 0.25 W
R541	315-0102-00			RES, FXD, COMP: 1 K OHM, 5%, 0.25 W
R542	315-0181-00			RES, FXD, COMP: 180 OHM, 5%, 0.25 W
R543	315-0102-00			RES, FXD, COMP: 1 K OHM, 5%, 0.25 W
R551	315-0102-00			RES, FXD, COMP: 1 K OHM, 5%, 0.25 W
S1 THRU S16	260-1132-00			SWITCH, PUSH: 1 BUTTON
S17	260-1206-00			SWITCH, TOGGLE: 3 POSITION
S18	260-1206-00			SWITCH, TOGGLE: 3 POSITION
S19	260-1206-00			SWITCH, TOGGLE: 3 POSITION
S20	260-1485-00			SWITCH, TOGGLE: SPST
S21	260-0613-00			SWITCH, TOGGLE: SPDT, 115 V
S22	260-0960-01			SWITCH, SLIDE: MINIATURE, 4 PIN
S23	260-0960-01			SWITCH, SLIDE: MINIATURE, 4 PIN
S24	260-0960-01			SWITCH, SLIDE: MINIATURE, 4 PIN
U11	156-0145-00			INTEGRATED CKT: 2-INPUT NAND BUFFER, SN7438N
U12	156-0145-00			INTEGRATED CKT: 2-INPUT NAND BUFFER, SN7438N
U13	156-0098-00			INTEGRATED CKT: DUAL 4 to 1 LINE DATA SEL, SN74153
U14	156-0098-00			INTEGRATED CKT: DUAL 4 to 1 LINE DATA SEL, SN74153
U15	156-0089-00			INTEGRATED CKT: SYNC 4-BIT UP-DOWN CNTR, SN74193

067-0662-00 (cont)

Ckt. No.	Tektronix Part No.	Serial/Model No. Eff	Disc	Description
U23	156-0098-00			INTEGRATED CKT: DUAL 4 to 1 LINE DATA SEL, SN74153
U24	156-0098-00			INTEGRATED CKT: DUAL 4 to 1 LINE DATA SEL, SN74153
U25	156-0089-00			INTEGRATED CKT: SYNC 4-BIT UP-DOWN CNTR, SN74193
U26	156-0123-00			INTEGRATED CKT: 4-BIT MAG COMPARATOR, SN7485N
U31	156-0145-00			INTEGRATED CKT: 2-INPUT NAND BUFFER, SN7438N
U33	156-0098-00			INTEGRATED CKT: DUAL 4 to 1 LINE DATA SEL, SN74153
U34	156-0098-00			INTEGRATED CKT: DUAL 4 to 1 LINE DATA SEL, SN74153
U35	156-0089-00			INTEGRATED CKT: SYNC 4-BIT UP-DOWN CNTR, SN74193
U36	156-0123-00			INTEGRATED CKT: 4-BIT MAG COMPARATOR, SN7485N
U41	156-0145-00			INTEGRATED CKT: 2-INPUT NAND BUFFER, SN7438N
U42	156-0145-00			INTEGRATED CKT: 2-INPUT NAND BUFFER, SN7438N
U43	156-0098-00			INTEGRATED CKT: DUAL 4 to 1 LINE DATA SEL, SN74153
U44	156-0098-00			INTEGRATED CKT: DUAL 4 to 1 LINE DATA SEL, SN74153
U45	156-0089-00			INTEGRATED CKT: SYNC 4-BIT UP-DOWN CNTR, SN74193
U46	156-0123-00			INTEGRATED CKT: 4-BIT MAG COMPARATOR, SN7435N
U51	156-0178-00			INTEGRATED CKT: 3-INPUT NOR GATE, SN7427N
U52	156-0043-00			INTEGRATED CKT: QUAD 2-INPUT NOR GATE, SN7402N
U53	156-0030-00			INTEGRATED CKT: QUAD 2-INPUT GATE, SN7400N
U54	156-0042-00			INTEGRATED CKT: QUAD LATCH, SN7476N
U55	156-0030-00			INTEGRATED CKT: QUAD 2-INPUT GATE, SN7400N
U56	156-0058-00			INTEGRATED CKT: HEX INVERTER, SN7404N
U57	156-0030-00			INTEGRATED CKT: QUAD 2-INPUT GATE, SN7400N

067-0663-00

Ckt. No.	Tektronix Part No.	Serial/Model No. Eff	Disc	Description
CHASSIS				
F200	159-0044-00			FUSE, CARTRIDGE: 3 AG, 2 AMP, 250 V, SLOW-BLOW
J1	131-0294-00			CONN, RCPT, ELEC: 36 PIN FEMALE
J2	131-0294-00			CONN, RCPT, ELEC: 36 PIN FEMALE
P200	161-0071-02			CABLE ASSY, PWR:
T1	120-0613-00			XMFR, FILAMENT: PRIMARY 115 V
S1	260-0613-00			SWITCH, TOGGLE: SPDT, 115 V
S2	260-0613-00			SWITCH, TOGGLE: SPDT, 115 V
S3	260-0613-00			SWITCH, TOGGLE: SPDT, 115 V
ASSEMBLY				
	670-2356-00			CKT BOARD ASSY: PROGRAM DATA
CR111	152-0141-02			SEMICOND DEVICE: SILICON, 30 V, 150 MA
CR121	152-0141-02			SEMICOND DEVICE: SILICON, 30 V, 150 MA
CR131	152-0141-02			SEMICOND DEVICE: SILICON, 30 V, 150 MA
CR141	152-0141-02			SEMICOND DEVICE: SILICON, 30 V, 150 MA
CR151	152-0141-02			SEMICOND DEVICE: SILICON, 30 V, 150 MA
CR161	152-0141-02			SEMICOND DEVICE: SILICON, 30 V, 150 MA
CR171	152-0141-02			SEMICOND DEVICE: SILICON, 30 V, 150 MA
CR181	152-0141-02			SEMICOND DEVICE: SILICON, 30 V, 150 MA
CR191	152-0141-02			SEMICOND DEVICE: SILICON, 30 V, 150 MA
CR201	152-0141-02			SEMICOND DEVICE: SILICON, 30 V, 150 MA
CR211	152-0141-02			SEMICOND DEVICE: SILICON, 30 V, 150 MA
CR221	152-0141-02			SEMICOND DEVICE: SILICON, 30 V, 150 MA
CR231	152-0141-02			SEMICOND DEVICE: SILICON, 30 V, 150 MA
CR241	152-0141-02			SEMICOND DEVICE: SILICON, 30 V, 150 MA
CR251	152-0141-02			SEMICOND DEVICE: SILICON, 30 V, 150 MA
CR261	152-0141-02			SEMICOND DEVICE: SILICON, 30 V, 150 MA
CR311	152-0141-02			SEMICOND DEVICE: SILICON, 30 V, 150 MA
CR321	152-0141-02			SEMICOND DEVICE: SILICON, 30 V, 150 MA
CR331	152-0141-02			SEMICOND DEVICE: SILICON, 30 V, 150 MA
CR341	152-0141-02			SEMICOND DEVICE: SILICON, 30 V, 150 MA
CR351	152-0141-02			SEMICOND DEVICE: SILICON, 30 V, 150 MA
CR361	152-0141-02			SEMICOND DEVICE: SILICON, 30 V, 150 MA
CR371	152-0141-02			SEMICOND DEVICE: SILICON, 30 V, 150 MA
CR381	152-0141-02			SEMICOND DEVICE: SILICON, 30 V, 150 MA
CR391	152-0141-02			SEMICOND DEVICE: SILICON, 30 V, 150 MA
CR401	152-0141-02			SEMICOND DEVICE: SILICON, 30 V, 150 MA
CR411	152-0141-02			SEMICOND DEVICE: SILICON, 30 V, 150 MA

067-0663-00 (cont)

Ckt. No.	Tektronix Part No.	Serial/Model No. Eff	Disc	Description
CR421	152-0141-02			SEMICOND DEVICE: SILICON, 30 V, 150 MA
CR431	152-0141-02			SEMICOND DEVICE: SILICON, 30 V, 150 MA
CR441	152-0141-02			SEMICOND DEVICE: SILICON, 30 V, 150 MA
CR451	152-0141-02			SEMICOND DEVICE: SILICON, 30 V, 150 MA
CR461	152-0141-02			SEMICOND DEVICE: SILICON, 30 V, 150 MA
DS11	150-1004-00			LAMP, LED: RED, 2.5 V, 15 MA
DS12	150-1004-00			LAMP, LED: RED, 2.5 V, 15 MA
DS13	150-1004-00			LAMP, LED: RED, 2.5 V, 15 MA
DS14	150-1004-00			LAMP, LED: RED, 2.5 V, 15 MA
DS15	150-1004-00			LAMP, LED: RED, 2.5 V, 15 MA
DS16	150-1004-00			LAMP, LED: RED, 2.5 V, 15 MA
DS17	150-1004-00			LAMP, LED: RED, 2.5 V, 15 MA
DS18	150-1004-00			LAMP, LED: RED, 2.5 V, 15 MA
DS19	150-1004-00			LAMP, LED: RED, 2.5 V, 15 MA
DS20	150-1004-00			LAMP, LED: RED, 2.5 V, 15 MA
DS21	150-1004-00			LAMP, LED: RED, 2.5 V, 15 MA
DS22	150-1004-00			LAMP, LED: RED, 2.5 V, 15 MA
DS23	150-1004-00			LAMP, LED: RED, 2.5 V, 15 MA
DS24	150-1004-00			LAMP, LED: RED, 2.5 V, 15 MA
DS25	150-1004-00			LAMP, LED: RED, 2.5 V, 15 MA
DS26	150-1004-00			LAMP, LED: RED, 2.5 V, 15 MA
DS31	150-1004-00			LAMP, LED: RED, 2.5 V, 15 MA
DS32	150-1004-00			LAMP, LED: RED, 2.5 V, 15 MA
DS33	150-1004-00			LAMP, LED: RED, 2.5 V, 15 MA
DS34	150-1004-00			LAMP, LED: RED, 2.5 V, 15 MA
DS35	150-1004-00			LAMP, LED: RED, 2.5 V, 15 MA
DS36	150-1004-00			LAMP, LED: RED, 2.5 V, 15 MA
DS37	150-1004-00			LAMP, LED: RED, 2.5 V, 15 MA
DS38	150-1004-00			LAMP, LED: RED, 2.5 V, 15 MA
DS39	150-1004-00			LAMP, LED: RED, 2.5 V, 15 MA
DS40	150-1004-00			LAMP, LED: RED, 2.5 V, 15 MA
DS41	150-1004-00			LAMP, LED: RED, 2.5 V, 15 MA
DS42	150-1004-00			LAMP, LED: RED, 2.5 V, 15 MA
DS43	150-1004-00			LAMP, LED: RED, 2.5 V, 15 MA
DS44	150-1004-00			LAMP, LED: RED, 2.5 V, 15 MA
DS45	150-1004-00			LAMP, LED: RED, 2.5 V, 15 MA
DS46	150-1004-00			LAMP, LED: RED, 2.5 V, 15 MA
Q11	151-0219-00			TRANSISTOR: SILICON, PNP, 2N4250
Q12	151-0219-00			TRANSISTOR: SILICON, PNP, 2N4250
Q13	151-0219-00			TRANSISTOR: SILICON, PNP, 2N4250
Q14	151-0219-00			TRANSISTOR: SILICON, PNP, 2N4250

067-0663-00 (cont)

Ckt. No.	Tektronix Part No.	Serial/Model No. Eff	Disc	Description
Q15	151-0219-00			TRANSISTOR: SILICON, PNP, 2N4250
Q16	151-0219-00			TRANSISTOR: SILICON, PNP, 2N4250
Q17	151-0219-00			TRANSISTOR: SILICON, PNP, 2N4250
Q18	151-0219-00			TRANSISTOR: SILICON, PNP, 2N4250
Q19	151-0219-00			TRANSISTOR: SILICON, PNP, 2N4250
Q20	151-0219-00			TRANSISTOR: SILICON, PNP, 2N4250
Q21	151-0219-00			TRANSISTOR: SILICON, PNP, 2N4250
Q22	151-0219-00			TRANSISTOR: SILICON, PNP, 2N4250
Q23	151-0219-00			TRANSISTOR: SILICON, PNP, 2N4250
Q24	151-0219-00			TRANSISTOR: SILICON, PNP, 2N4250
Q25	151-0219-00			TRANSISTOR: SILICON, PNP, 2N4250
Q26	151-0219-00			TRANSISTOR: SILICON, PNP, 2N4250
Q31	151-0219-00			TRANSISTOR: SILICON, PNP, 2N4250
Q32	151-0219-00			TRANSISTOR: SILICON, PNP, 2N4250
Q33	151-0219-00			TRANSISTOR: SILICON, PNP, 2N4250
Q34	151-0219-00			TRANSISTOR: SILICON, PNP, 2N4250
Q35	151-0219-00			TRANSISTOR: SILICON, PNP, 2N4250
Q36	151-0219-00			TRANSISTOR: SILICON, PNP, 2N4250
Q37	151-0219-00			TRANSISTOR: SILICON, PNP, 2N4250
Q38	151-0219-00			TRANSISTOR: SILICON, PNP, 2N4250
Q39	151-0219-00			TRANSISTOR: SILICON, PNP, 2N4250
Q40	151-0219-00			TRANSISTOR: SILICON, PNP, 2N4250
Q41	151-0219-00			TRANSISTOR: SILICON, PNP, 2N4250
Q42	151-0219-00			TRANSISTOR: SILICON, PNP, 2N4250
Q43	151-0219-00			TRANSISTOR: SILICON: PNP, 2N4250
Q44	151-0219-00			TRANSISTOR: SILICON, PNP, 2N4250
Q45	151-0219-00			TRANSISTOR: SILICON, PNP, 2N4250
Q46	151-0219-00			TRANSISTOR: SILICON, PNP, 2N4250
R1	315-0470-00			RES, FXD, COMP: 47 OHM, 5%, 0.25 W
R2	315-0470-00			RES, FXD, COMP: 47 OHM, 5%, 0.25 W
R111	315-0471-00			RES, FXD, COMP: 470 OHM, 5%, 0.25 W
R112	315-0473-00			RES, FXD, COMP: 47 K OHM, 5%, 0.25 W
R113	315-0391-00			RES, FXD, COMP: 390 OHM, 5%, 0.25 W
R121	315-0471-00			RES, FXD, COMP, 470 OHM, 5%, 0.25 W
R122	315-0473-00			RES, FXD, COMP, 47 K OHM, 5%, 0.25 W
R123	315-0391-00			RES, FXD, COMP: 390 OHM, 5%, 0.25 W
R131	315-0471-00			RES, FXD, COMP: 470 OHM, 5%, 0.25 W
R132	315-0473-00			RES, FXD, COMP: 47 K OHM, 5%, 0.25 W
R133	315-0391-00			RES, FXD, COMP: 390 OHM, 5%, 0.25 W
R141	315-0471-00			RES, FXD, COMP: 470 OHM, 5%, 0.25 W

067-0663-00 (cont)

Ckt. No.	Tektronix Part No.	Serial/Model No. Eff	Disc	Description
R142	315-0473-00			RES, FXD, COMP: 47 K OHM, 5%, 0.25 W
R143	315-0391-00			RES, FXD, COMP: 390 OHM, 5%, 0.25 W
R151	315-0471-00			RES, FXD, COMP: 470 OHM, 5%, 0.25 W
R152	315-0473-00			RES, FXD, COMP: 47 K OHM, 5%, 0.25 W
R153	315-0391-00			RES, FXD, COMP: 390 OHM, 5%, 0.25 W
R161	315-0471-00			RES, FXD, COMP: 470 OHM, 5%, 0.25 W
R162	315-0473-00			RES, FXD, COMP: 47 K OHM, 5%, 0.25 W
R163	315-0391-00			RES, FXD, COMP: 390 OHM, 5%, 0.25 W
R171	315-0471-00			RES, FXD, COMP: 470 OHM, 5%, 0.25 W
R172	315-0473-00			RES, FXD, COMP: 47 K OHM, 5%, 0.25 W
R173	315-0391-00			RES, FXD, COMP: 390 OHM, 5%, 0.25 W
R181	315-0471-00			RES, FXD, COMP: 470 OHM, 5%, 0.25 W
R182	315-0473-00			RES, FXD, COMP: 47 K OHM, 5%, 0.25 W
R183	315-0391-00			RES, FXD, COMP: 390 OHM, 5%, 0.25 W
R191	315-0471-00			RES, FXD, COMP: 470 OHM, 5%, 0.25 W
R192	315-0473-00			RES, FXD, COMP: 47 K OHM, 5%, 0.25 W
R193	315-0391-00			RES, FXD, COMP: 390 OHM, 5%, 0.25 W
R201	315-0471-00			RES, FXD, COMP: 470 OHM, 5%, 0.25 W
R202	315-0473-00			RES, FXD, COMP: 47 K OHM, 5%, 0.25 W
R203	315-0391-00			RES, FXD, COMP: 390 OHM, 5%, 0.25 W
R211	315-0471-00			RES, FXD, COMP: 470 OHM, 5%, 0.25 W
R212	315-0473-00			RES, FXD, COMP: 47 K OHM, 5%, 0.25 W
R213	315-0391-00			RES, FXD, COMP: 390 OHM, 5%, 0.25 W
R221	315-0471-00			RES, FXD, COMP: 470 OHM, 5%, 0.25 W
R222	315-0473-00			RES, FXD, COMP: 47 K OHM, 5%, 0.25 W
R223	315-0391-00			RES, FXD, COMP: 390 OHM, 5%, 0.25 W
R231	315-0471-00			RES, FXD, COMP: 470 OHM, 5%, 0.25 W
R232	315-0473-00			RES, FXD, COMP: 47 K OHM, 5%, 0.25 W
R233	315-0391-00			RES, FXD, COMP: 390 OHM, 5%, 0.25 W
R241	315-0471-00			RES, FXD, COMP: 470 OHM, 5%, 0.25 W
R242	315-0473-00			RES, FXD, COMP: 47 K OHM, 5%, 0.25 W
R243	315-0391-00			RES, FXD, COMP: 390 OHM, 5%, 0.25 W
R251	315-0471-00			RES, FXD, COMP: 470 OHM, 5%, 0.25 W
R252	315-0473-00			RES, FXD, COMP: 47 K OHM, 5%, 0.25 W
R253	315-0391-00			RES, FXD, COMP: 390 OHM, 5%, 0.25 W
R261	315-0471-00			RES, FXD, COMP: 470 OHM, 5%, 0.25 W
R262	315-0473-00			RES, FXD, COMP: 47 K OHM, 5%, 0.25 W
R263	315-0391-00			RES, FXD, COMP: 390 OHM, 5%, 0.25 W
R311	315-0471-00			RES, FXD, COMP: 470 OHM, 5%, 0.25 W
R312	315-0473-00			RES, FXD, COMP: 47 K OHM, 5%, 0.25 W
R313	315-0391-00			RES, FXD, COMP: 390 OHM, 5%, 0.25 W
R321	315-0471-00			RES, FXD, COMP: 470 OHM, 5%, 0.25 W

067-06663-00 (cont)

Ckt. No.	Tektronix Part No.	Serial/Model No. Eff	Disc	Description
R322	315-0473-00			RES, FXD, COMP: 47 K OHM, 5%, 0.25 W
R323	315-0391-00			RES, FXD, COMP: 390 OHM, 5%, 0.25 W
R331	315-0471-00			RES, FXD, COMP: 470 OHM, 5%, 0.25 W
R332	315-0473-00			RES, FXD, COMP: 47 K OHM, 5%, 0.25 W
R333	315-0391-00			RES, FXD, COMP: 390 OHM, 5%, 0.25 W
R341	315-0471-00			RES, FXD, COMP: 470 OHM, 5%, 0.25 W
R342	315-0473-00			RES, FXD, COMP: 47 K OHM, 5%, 0.25 W
R343	315-0391-00			RES, FXD, COMP: 390 OHM, 5%, 0.25 W
R351	315-0471-00			RES, FXD, COMP: 470 OHM, 5%, 0.25 W
R352	315-0473-00			RES, FXD, COMP: 47 K OHM, 5%, 0.25 W
R353	315-0391-00			RES, FXD, COMP: 390 OHM, 5%, 0.25 W
R361	315-0471-00			RES, FXD, COMP: 470 OHM, 5%, 0.25 W
R362	315-0473-00			RES, FXD, COMP: 47 K OHM, 5%, 0.25 W
R363	315-0391-00			RES, FXD, COMP: 390 OHM, 5%, 0.25 W
R371	315-0471-00			RES, FXD, COMP: 470 OHM, 5%, 0.25 W
R372	315-0473-00			RES, FXD, COMP: 47 K OHM, 5%, 0.25 W
R373	315-0391-00			RES, FXD, COMP: 390 OHM, 5%, 0.25 W
R381	315-0471-00			RES, FXD, COMPL 470 OHM, 5%, 0.25 W
R382	315-0473-00			RES, FXD, COMP: 47 K OHM, 5%, 0.25 W
R383	315-0391-00			RES, FXD, COMP: 390 OHM, 5%, 0.25 W
R391	315-0471-00			RES, FXD, COMP: 470 OHM, 5%, 0.25 W
R392	315-0473-00			RES, FXD, COMP: 47 K OHM, 5%, 0.25 W
R393	315-0391-00			RES, FXD, COMP: 390 OHM, 5%, 0.25 W
R401	315-0471-00			RES, FXD, COMP: 470 OHM, 5%, 0.25 W
R402	315-0473-00			RES, FXD, COMP: 47 K OHM, 5%, 0.25 W
R403	315-0391-00			RES, FXD, COMP: 390 OHM, 5%, 0.25 W
R411	315-0471-00			RES, FXD, COMP: 470 OHM, 5%, 0.25 W
R412	315-0473-00			RES, FXD, COMP: 47 K OHM, 5%, 0.25 W
R413	315-0391-00			RES, FXD, COMP: 390 OHM, 5%, 0.25 W
R421	315-0471-00			RES, FXD, COMP: 470 OHM, 5%, 0.25 W
R422	315-0473-00			RES, FXD, COMP: 47 K OHM, 5%, 0.25 W
R423	315-0391-00			RES, FXD, COMP: 390 OHM, 5%, 0.25 W
R431	315-0471-00			RES, FXD, COMP: 470 OHM, 5%, 0.25 W
R432	315-0473-00			RES, FXD, COMP: 47 K OHM, 5%, 0.25 W
R433	315-0391-00			RES, FXD, COMP: 390 OHM, 5%, 0.25 W
R441	315-0471-00			RES, FXD, COMP: 470 OHM, 5%, 0.25 W
R442	315-0473-00			RES, FXD, COMP: 47 K OHM, 5%, 0.25 W
R443	315-0391-00			RES, FXD, COMP: 390 OHM, 5%, 0.25 W
R451	315-0471-00			RES, FXD, COMP: 470 OHM, 5%, 0.25 W
R452	315-0473-00			RES, FXD, COMP: 47 K OHM, 5%, 0.25 W
R453	315-0391-00			RES, FXD, COMP: 390 OHM, 5%, 0.25 W
R461	315-0471-00			RES, FXD, COMP: 470 OHM, 5%, 0.25 W
R462	315-0473-00			RES, FXD, COMP: 47 K OHM, 5%, 0.25 W
R463	315-0391-00			RES, FXD, COMP: 390 OHM, 5%, 0.25 W

067-0663-00 (cont)

Ckt. No.	Tektronix Part No.	Serial/Model No. Eff	Disc	Description
ASSEMBLY				
	670-2777-00			CKT BOARD ASSY: POWER SUPPLY
C200	290-0632-00			CAP, FXD, ELCTLT: 6200 μF, +75-10%, 15 V
CR200	152-0488-00			SEMICOND DEVICE: SILICON, 200 V, 1500 MA
R200	315-0103-00			RES, FXD, COMP: 10 K OHM, 5%, 0.25 W
U200	156-0277-00			INTEGRATED CKT: VOLTAGE REGULATOR, UA7805

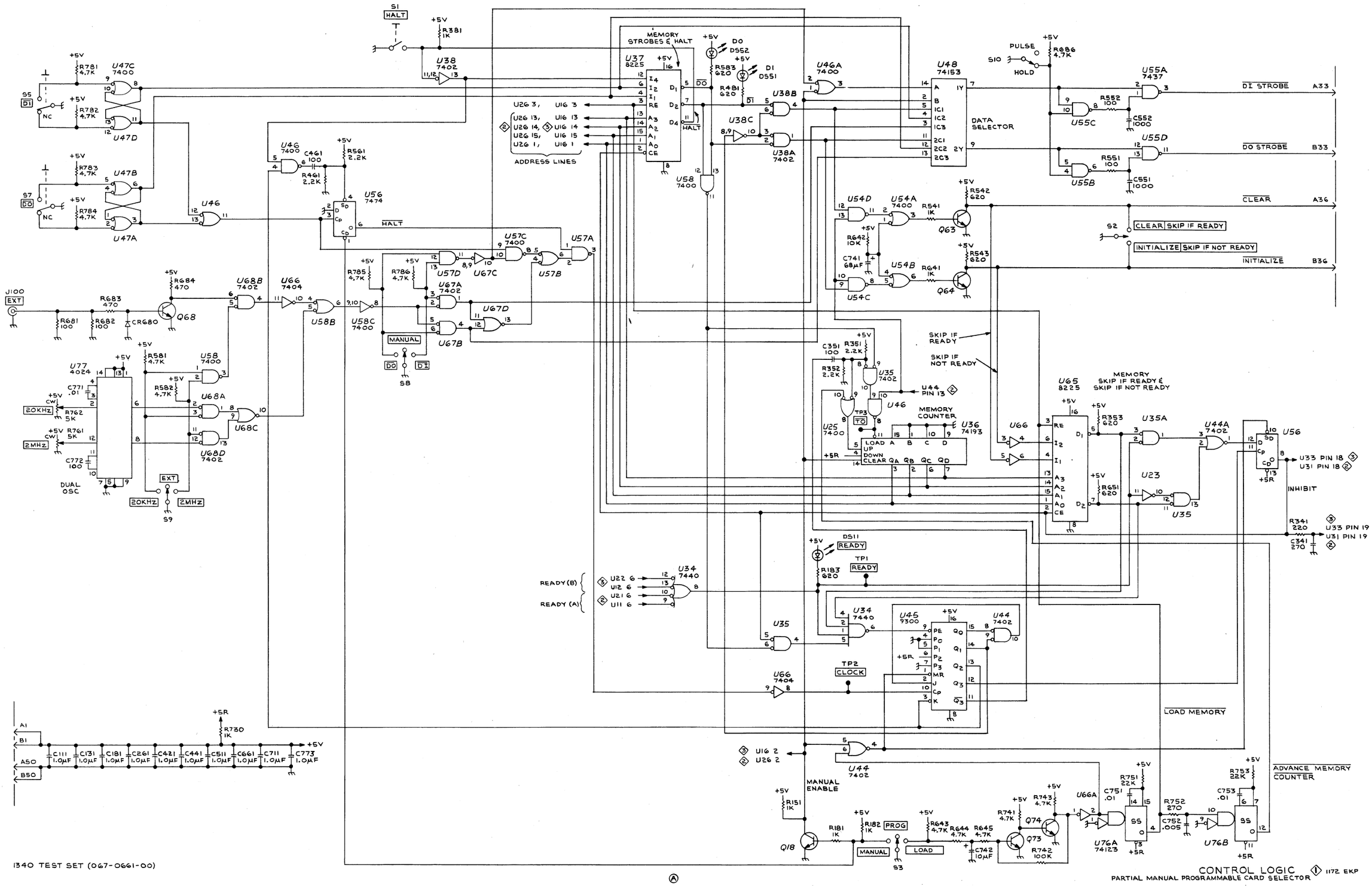

1340 TEST SET (067-0661-00)

CONTROL LOGIC 1 1172 EKP
PARTIAL MANUAL PROGRAMMABLE CARD SELECTOR

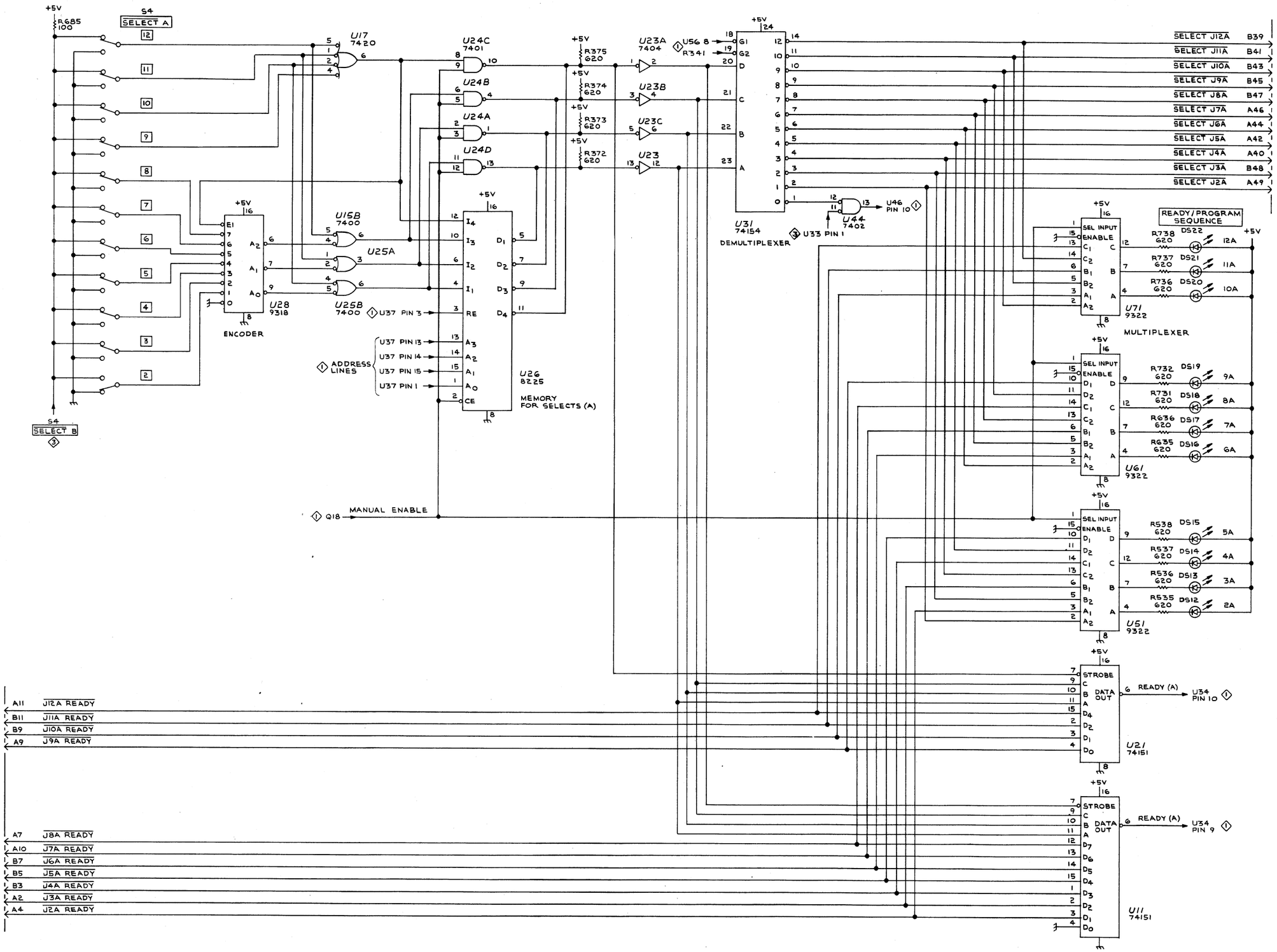

1340 TEST SET (067-0661-00)

SELECT & STATUS (A) 2

PARTIAL MANUAL PROGRAMMABLE CARD SELECTOR

1172 EKP

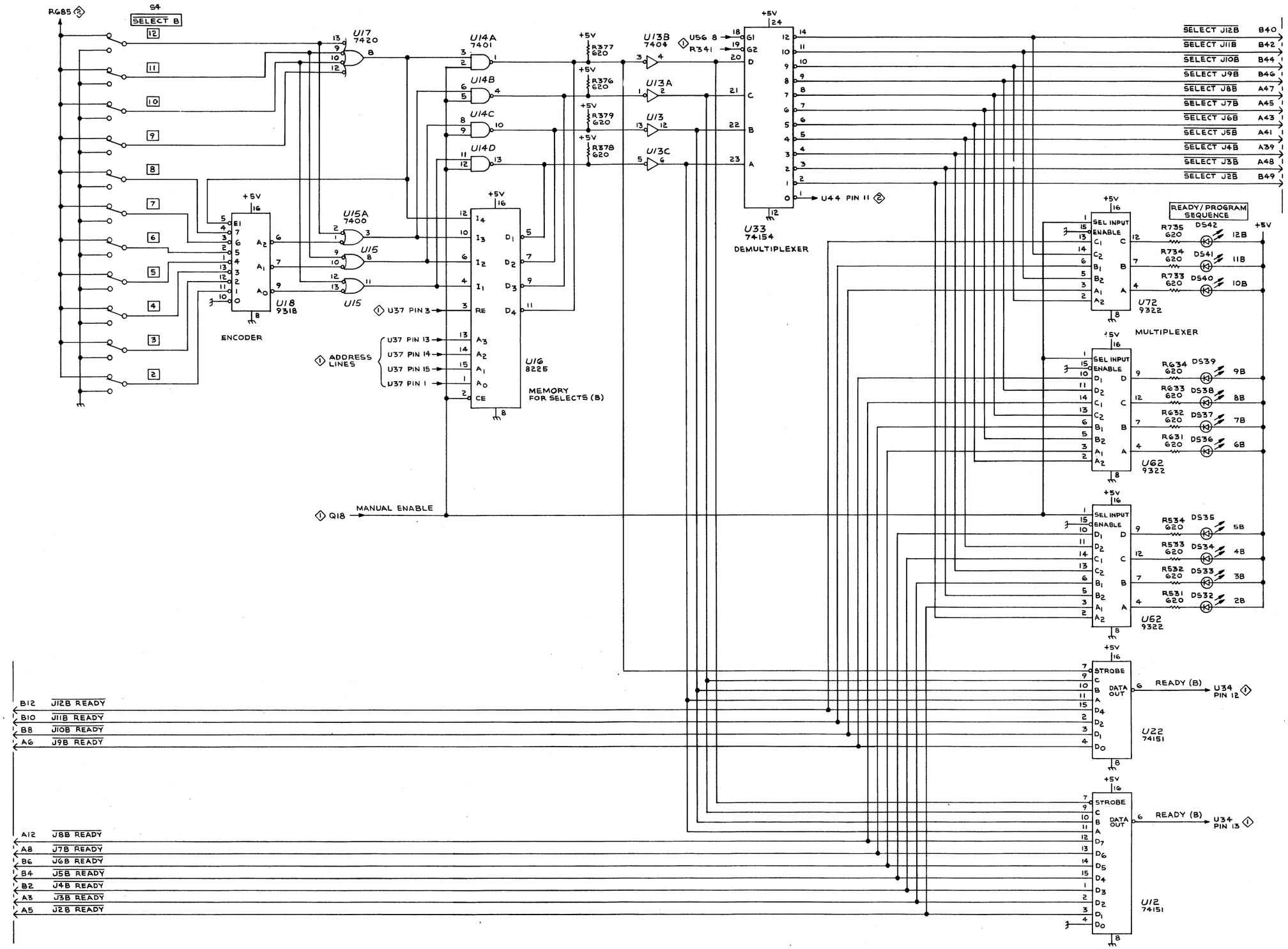

SELECT & STATUS (B) 3

PARTIAL MANUAL PROGRAMMABLE CARD SELECTOR

1172 EKP

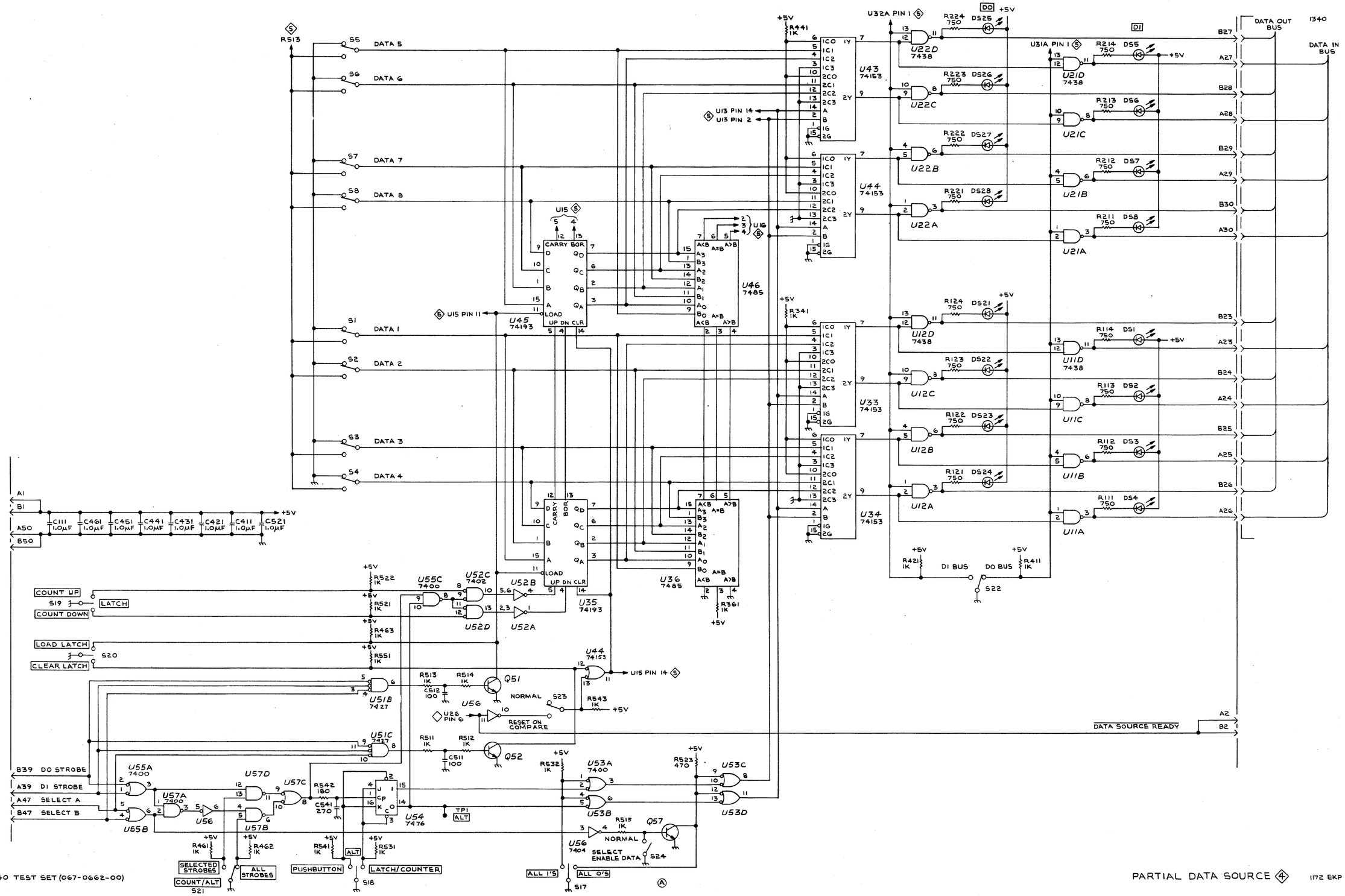

PARTIAL DATA SOURCE 4

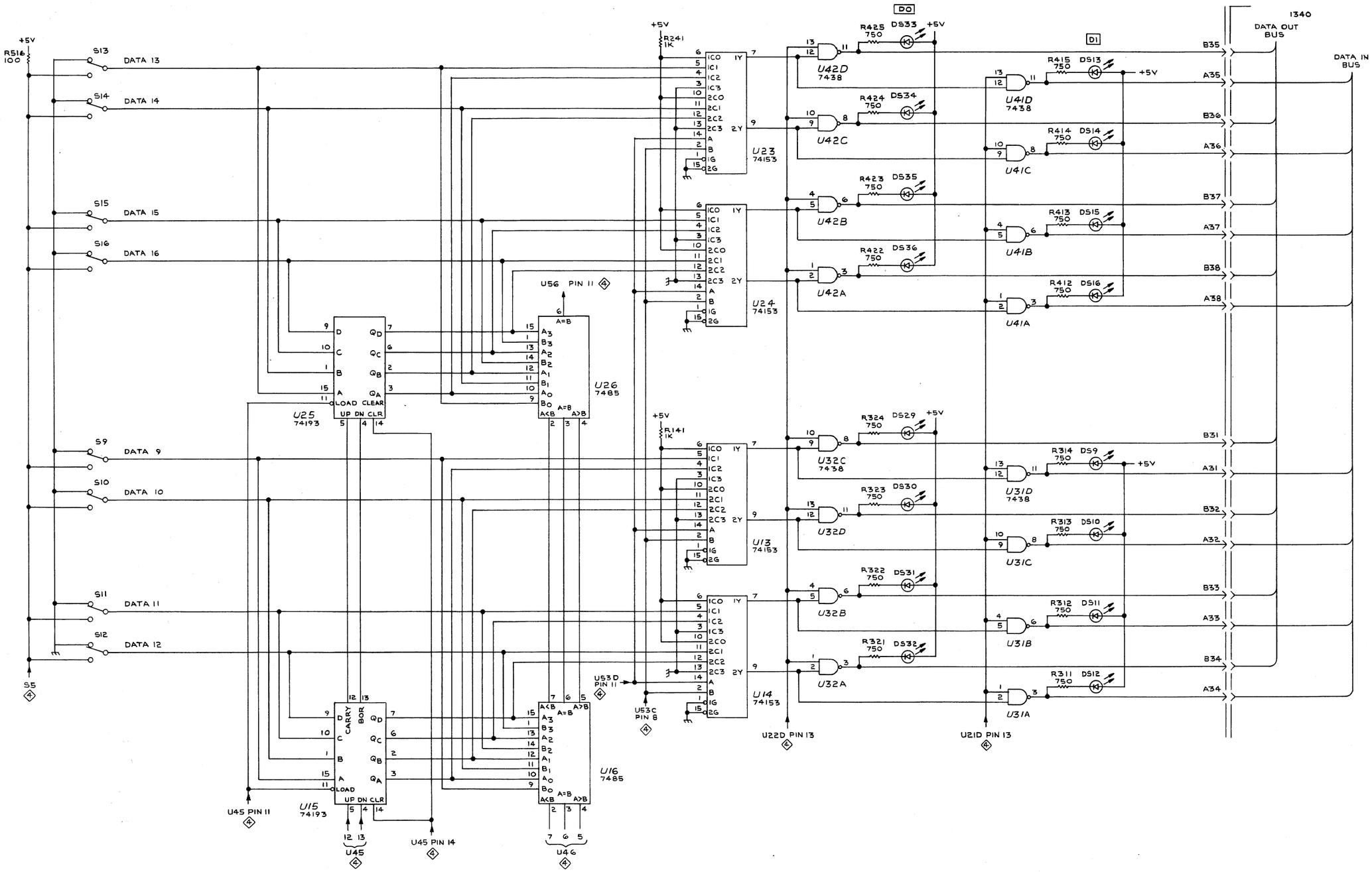
+5V
R516 100
S13
DATA 13
S14
DATA 14
S15
DATA 15
S16
DATA 16
S9
DATA 9
S10
DATA 10
S11
DATA 11
S12
DATA 12
S5
U25 74193
U26 7485
U15 74193
U16 7485
U45 PIN 11
U45 PIN 14
U45
U46
U56 PIN 11
U53D PIN 11
U53C PIN 8
U22D PIN 13
U21D PIN 13
R241 1K
R141 1K
U23 74153
U24 74153
U13 74153
U14 74153
U42D 7438
U42C
U42B
U42A
U41D 7438
U41C
U41B
U41A
U32C 7438
U32D
U32B
U32A
U31D 7438
U31C
U31B
U31A
D0
D1
R425 750
DS33
R424 750
DS34
R423 750
DS35
R422 750
DS36
R415 750
DS13
R414 750
DS14
R413 750
DS15
R412 750
DS16
R324 750
DS29
R323 750
DS30
R322 750
DS31
R321 750
DS32
R314 750
DS9
R313 750
DS10
R312 750
DS11
R311 750
DS12
1340 DATA OUT BUS
DATA IN BUS
B35
A35
B36
A36
B37
A37
B38
A38
B31
A31
B32
A32
B33
A33
B34
A34

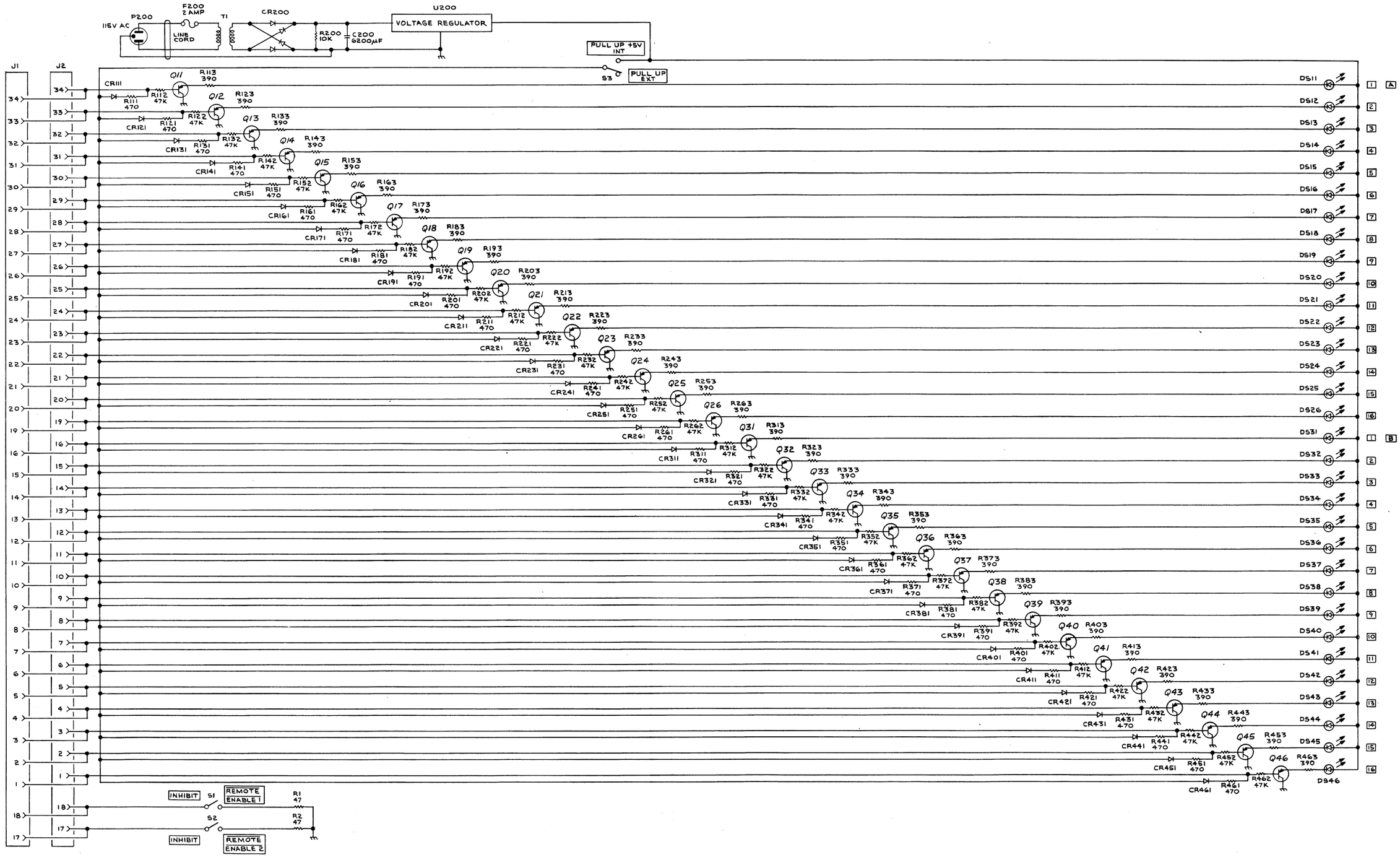
P200
115V AC
F200
2 AMP
LINE CORD
T1
CR200
R200
10K
C200
6200µF
U200
VOLTAGE REGULATOR
PULL UP +5V INT
S3
PULL UP EXT
J1
J2
DS11
DS12
DS13
DS14
DS15
DS16
DS17
DS18
DS19
DS20
DS21
DS22
DS23
DS24
DS25
DS26
DS31
DS32
DS33
DS34
DS35
DS36
DS37
DS38
DS39
DS40
DS41
DS42
DS43
DS44
DS45
DS46
INHIBIT
S1
REMOTE ENABLE 1
R1
47
S2
R2
47
INHIBIT
REMOTE ENABLE 2

MECHANICAL REPLACEABLE PARTS LIST

PARTS ORDERING INFORMATION

Replacement parts are available from or through your local Tektronix, Inc. Field Office or representative.

Changes to Tektronix instruments are sometimes made to accommodate improved components as they become available, and to give you the benefit of the latest circuit improvements developed in our engineering department. It is therefore important, when ordering parts, to include the following information in your order: Part number, instrument type or number, serial number, and modification number if applicable.

If a part you have ordered has been replaced with a new or improved part, your local Tektronix, Inc. Field Office or representative will contact you concerning any change in part number.

Change information, if any, is located at the rear of this manual.

SPECIAL NOTES AND SYMBOLS

X000	Part first added at this serial number
00X	Part removed after this serial number

FIGURE AND INDEX NUMBERS

Items in this section are referenced by figure and index numbers to the illustrations.

INDENTATION SYSTEM

This mechanical parts list is indented to indicate item relationships. Following is an example of the indentation system used in the description column.

1 2 3 4 5 Name & Description

Assembly and/or Component
Attaching parts for Assembly and/or Component
--- * ---
Detail Part of Assembly and/or Component
Attaching parts for Detail Part
--- * ---
Parts of Detail Part
Attaching parts for Parts of Detail Part
--- * ---

Attaching Parts always appear in the same indentation as the item it mounts, while the detail parts are indented to the right. Indented items are part of, and included with, the next higher indentation. The separation symbol --- * --- indicates the end of attaching parts.

Attaching parts must be purchased separately, unless otherwise specified.

ITEM NAME

In the Parts List, an Item Name is separated from the description by a colon (:). Because of space limitations, an Item Name may sometimes appear as incomplete. For further Item Name identification, the U.S. Federal Cataloging Handbook H6-1 can be utilized where possible.

ABBREVIATIONS

"	INCH	FLH	FLAT HEAD	PWR	POWER
#	NUMBER SIZE	FLTR	FILTER	RCPT	RECEPTACLE
ACTR	ACTUATOR	FR	FRAME or FRONT	RES	RESISTOR
ADPTR	ADAPTER	FSTNR	FASTENER	RDG	RIGID
ALIGN	ALIGNMENT	FT	FOOT	RLF	RELIEF
AL	ALUMINUM	FXD	FIXED	RTNR	RETAINER
ASSEM	ASSEMBLED	GSKT	GASKET	SCH	SOCKET HEAD
ASSY	ASSEMBLY	HDL	HANDLE	SCOPE	OSCILLOSCOPE
ATTEN	ATTENUATOR	HEX	HEXAGON	SCR	SCREW
AWG	AMERICAN WIRE GAGE	HEX HD	HEXAGONAL HEAD	SE	SINGLE END
BD	BOARD	HEX SOC	HEXAGONAL SOCKET	SECT	SECTION
BRKT	BRACKET	HLCPS	HELICAL COMPRESSION	SEMICOND	SEMICONDUCTOR
BRS	BRASS	HLEXT	HELICAL EXTENSION	SHLD	SHIELD
BRZ	BRONZE	HV	HIGH VOLTAGE	SHLDR	SHOULDERED
BSHG	BUSHING	IC	INTEGRATED CIRCUIT	SKT	SOCKET
CAB	CABINET	ID	INSIDE DIAMETER	SL	SLIDE
CAP	CAPACITOR	IDENT	IDENTIFICATION	SLFLKG	SELF-LOCKING
CER	CERAMIC	IMPLR	IMPELLER	SLVG	SLEEVING
CHAS	CHASSIS	IN	INCH	SPR	SPRING
CKT	CIRCUIT	INCAND	INCANDESCENT	SQ	SQUARE
COMP	COMPOSITION	INSUL	INSULATOR	SST	STAINLESS STEEL
CONN	CONNECTOR	INTL	INTERNAL	STL	STEEL
COV	COVER	LPHLDR	LAMPHOLDER	SW	SWITCH
CPLG	COUPLING	MACH	MACHINE	T	TUBE
CRT	CATHODE RAY TUBE	MECH	MECHANICAL	TERM	TERMINAL
DEG	DEGREE	MTG	MOUNTING	THD	THREAD
DWR	DRAWER	NIP	NIPPLE	THK	THICK
ELCTRN	ELECTRON	NON WIRE	NOT WIRE WOUND	TNSN	TENSION
ELEC	ELECTRICAL	OBD	ORDER BY DESCRIPTION	TPG	TAPPING
ELCTLT	ELECTROLYTIC	OD	OUTSIDE DIAMETER	TRH	TRUSS HEAD
ELEM	ELEMENT	OVH	OVAL HEAD	V	VOLTAGE
EPL	ELECTRICAL PARTS LIST	PH BRZ	PHOSPHOR BRONZE	VAR	VARIABLE
EQPT	EQUIPMENT	PL	PLAIN or PLATE	W/	WITH
EXT	EXTERNAL	PLSTC	PLASTIC	WSHR	WASHER
FIL	FILLISTER HEAD	PN	PART NUMBER	XFMR	TRANSFORMER
FLEX	FLEXIBLE	PNH	PAN HEAD	XSTR	TRANSISTOR

MECHANICAL PARTS LIST

Fig. & Index No.	Tektronix Part No.	Serial/Model No. Eff	Disc	Qty	Description 1 2 3 4 5
1-1	- - - - - -			1	CKT CARD ASSY: PROGRAMMABLE SELECTOR (SEE EPL FOR PN)
	- - - - - -			-	CKT CARD ASSY INCLUDES
-2	D366-1489-08			2	PUSHBUTTON: 2
-3	D366-1489-09			2	PUSHBUTTON: 3
-4	D366-1489-10			2	PUSHBUTTON: 4
-5	D366-1489-11			2	PUSHBUTTON: 5
-6	D366-1489-12			2	PUSHBUTTON: 6
-7	D366-1489-13			2	PUSHBUTTON: 7
-8	D366-1489-14			2	PUSHBUTTON: 8
-9	D366-1489-15			2	PUSHBUTTON: 9
-10	D366-1489-16			2	PUSHBUTTON: 10
-11	D366-1489-17			2	PUSHBUTTON: 11
-12	D366-1489-18			2	PUSHBUTTON: 12
-13	426-0681-00			22	FRAME: PUSHBUTTON
-14	366-1513-00			2	PUSHBUTTON: RED PLASTIC
-15	260-1285-00			2	SWITCH, PUSH: SPDT MOMENTARY, W/HARDWARE
-16	131-0282-00			1	CONNECTOR: RECEPTACLE
					(ATTACHING PARTS)
-17	210-0223-00			1	TERMINAL, LUG: 0.25 INCH DIAMETER, SE
					- - - * - - -
-18	131-0183-00			3	TERMINAL: FEEDTHRU
-19	358-0136-00			3	INSULATOR: BUSH:
-20	260-1206-00			2	SWITCH, TOGGLE: 3 POSITION, W/HARDWARE
-21	260-0735-00			1	SWITCH, PUSH: SPST, W/HARDWARE
-22	260-1485-00			1	SWITCH, TOGGLE: SPDT, W/HARDWARE
-23	260-0614-00			1	SWITCH, TOGGLE: DPDT 3 POSITION, W/HARDWARE
-24	333-1646-00			1	PANEL, FRONT:
					(ATTACHING PARTS)
-25	211-0038-00			4	SCREW MACHINE: 4-40 x 0.312" 100 DEG, FLH STL
					- - - * - - -
-26	129-0203-00			2	POST, METALLIC: 1.141 INCHES LONG, HEX
					(ATTACHING PARTS)
-27	211-0116-00			2	SCR, ASSEM WSHR: 4-40 x 0.312 INCH, PNH BRS
					- - - * - - -
-28	129-0315-00			2	POST, METALLIC: 0.452 INCH LONG, HEX
					(ATTACHING PARTS)
-29	211-0116-00			2	SCR,ASSEM WSHR: 4-40 x 0.312 INCH, PNH BRS
					- - - * - - -
-30	260-1551-00			1	SWITCH, PUSH: 11 POSITION, TOP
-31	260-1552-00			1	SWITCH, PUSH: 11 POSITION, BOTTOM
-32	361-0384-00			6	SPACER, PB SW: 0.133 INCH LONG
-33	260-0960-01			1	SWITCH, SLIDE:
-34	131-0988-00			6	BUSS BAR: 9 TERM
-35	136-0252-04			18	SOCKET, PIN CONN: 0.188 INCH LONG
-36	136-0260-02			20	SOCKET, SEMICOND: 16 PIN
-37	136-0269-02			22	SOCKET, SEMICOND: 14 PIN
-38	136-0432-00			2	SOCKET, SEMICOND: 24 PIN

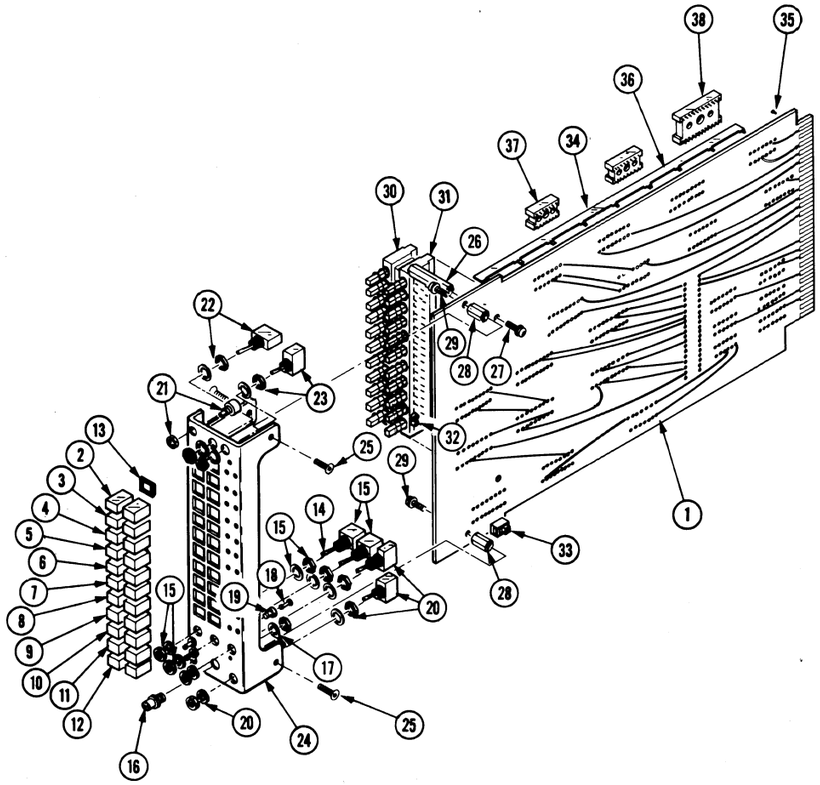

MECHANICAL PARTS LIST

Fig. & Index No.	Tektronix Part No.	Serial/Model No. Eff	Disc	Qty	Description 1 2 3 4 5
2-1	- - - - - -			1	CKT CARD ASSY: DATA SOURCE (SEE EPL FOR PN)
	- - - - - -			-	CKT CARD ASSY INCLUDES
-2 D	366-1489-07			1	PUSHBUTTON: 1
-3 D	366-1489-08			1	PUSHBUTTON: 2
-4 D	366-1489-09			1	PUSHBUTTON: 3
-5 D	366-1489-10			1	PUSHBUTTON: 4
-6 D	366-1489-11			1	PUSHBUTTON: 5
-7 D	366-1489-12			1	PUSHBUTTON: 6
-8 D	366-1489-13			1	PUSHBUTTON: 7
-9 D	366-1489-14			1	PUSHBUTTON: 8
-10 D	366-1489-15			1	PUSHBUTTON: 9
-11 D	366-1489-16			1	PUSHBUTTON: 10
-12 D	366-1489-17			1	PUSHBUTTON: 11
-13 D	366-1489-18			1	PUSHBUTTON: 12
-14 D	366-1489-19			1	PUSHBUTTON: 13
-15 D	366-1489-20			1	PUSHBUTTON: 14
-16 D	366-1489-21			1	PUSHBUTTON: 15
-17 D	366-1489-22			1	PUSHBUTTON: 16
-18	426-0681-00			16	FRAME: PUSHBUTTON
-19	131-0183-00			1	TERMINAL: FEEDTHRU
-20	358-0136-00			1	INSULATOR, BUSH:
-21	260-0613-00			1	SWITCH, TOGGLE: SPDT, W/HARDWARE
-22	260-1485-00			1	SWITCH, TOGGLE: SPDT, W/HARDWARE
-23	260-1206-00			3	SWITCH, TOGGLE: 3 POSITION, W/HARDWARE
-24	260-1132-00			16	SWITCH, PUSH: 1 BUTTON, DOUBLE POLE
-25	333-1647-00			1	PANEL, FRONT:
					(ATTACHING PARTS)
-26	211-0101-00			2	SCREW, MACHINE: 4-40 x 0.25" 100 DEG, FLH STL
					- - - * - - -
-27	361-0504-00			2	SPACER BLOCK:
					(ATTACHING PARTS)
-28	211-0116-00			1	SCR,ASSEM WSHR: 4-40 x 0.312 INCH, PNH BRS
					- - - * - - -
-29	129-0268-00			2	POST, METALLIC: 1.396 INCH LONG, HEX
					(ATTACHING PARTS)
-30	211-0014-00			1	SCREW, MACHINE: 4-40 x 0.50 INCH, PNH STL
					- - - * - - -
-31	260-0960-01			3	SWITCH, SLIDE:
-32	131-0998-00			6	BUS BAR: 9 TERM
-33	136-0252-04			9	SOCKET, PIN CONN: 0.188 INCH LONG
-34	136-0260-02			17	SOCKET, SEMICOND: 16 PIN
-35	136-0269-02			14	SOCKET, SEMICOND: 14 PIN

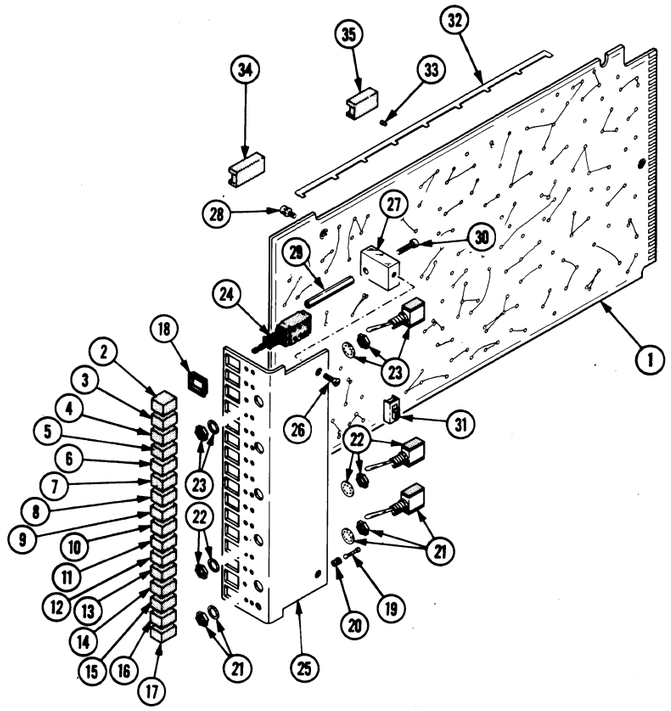

067-0662-00
EXPLODED VIEW

MECHANICAL PARTS LIST

Fig. & Index No.	Tektronix Part No.	Serial/Model No. Eff	Disc	Qty	Description 1 2 3 4 5
3-1	380-0326-00			1	HOUSING:
-2	386-2414-00			1	PANEL, REAR:
					(ATTACHING PARTS)
-3	211-0008-00			4	SCREW, MACHINE: 4-40 x 0.25 INCH, PNH STL
					- - - * - - -
-4	386-2577-00			1	PLATE, MOUNTING: CONNECTOR
					(ATTACHING PARTS)
-5	211-0504-00			2	SCREW, MACHINE: 6-32 x 0.25 INCH, PNH STL
					- - - * - - -
-6	333-1661-00			1	PANEL, FRONT:
					(ATTACHING PARTS)
-7	211-0071-00			2	SCREW, MACHINE: 4-40 x 0.375 INCH, TRH STL
					- - - * - - -
-8	260-0613-00			3	SWITCH, TOGGLE: SPDT, W/HARDWARE
-9	220-0657-00			2	NUT BLOCK: L-SHAPE
					(ATTACHING PARTS)
-10	211-0116-00			1	SCR, ASSEM WSHR: 4-40 x 0.312 INCH, PNH BRS
					- - - * - - -
-11	- - - - - -			1	CKT BOARD ASSY: POWER SUPPLY (SEE EPL FOR PN)
					(ATTACHING PARTS)
-12	211-0008-00			2	SCREW, MACHINE: 4-40 x 0.25 INCH, PNH STL
-13	210-0586-00			2	NUT, PLAIN, EXT W: 4-40 x 0.25 INCH, STL
					- - - * - - -
	- - - - - -			-	CKT BOARD ASSY INCLUDES
-14	214-0579-00			2	TERMINAL PIN: TEST POINT
-15	407-1309-00			1	BRACKET, MTG: POWER SUPPLY
					(ATTACHING PARTS)
-16	211-0038-00			2	SCREW, MACHINE: 4-40 x 0.312 "100 DEG, FLH STL
-17	- - - - - -			1	TRANSFORMER: (SEE EPL FOR PN)
-18	210-0956-00			2	WASHER, FLAT: 0.12 ID X 0.25 INCH OD, SST
-19	129-0230-00			2	POST METALLIC: 1.375 INCH LONG, HEX
-20	211-0116-00			2	SCR, ASSEM WSHR: 4-40 x 0.312 INCH, PNH BRS
					- - - * - - -
-21	343-0002-00			1	CLAMP, LOOP:
					(ATTACHING PARTS)
-22	211-0538-00			1	SCREW, MACHINE: 6-32 x 0.312" 100 DEG, FLH STL
-23	210-0863-00			1	WSHR, LOOP CLAMP:
-24	210-0457-00			1	NUT, PLAIN EXT W: 6-32 x 0.312 INCH , STL
					- - - * - - -
-25	131-0761-00			1	TERMINAL POST:
					(ATTACHING PARTS)
-26	211-0502-00			1	SCREW, MACHINE: 6-32 x 0.788" 100 DEG, FLH STL
					- - - * - - -
-27	161-0071-02			1	CABLE ASSY, PWR:
-28	352-0076-00			1	FUSEHOLDER: W/HARDWARE
-29	200-0237-00			1	COVER: FUSEHOLDER
-30	220-0547-01			2	NUT BLOCK:
					(ATTACHING PARTS FOR EACH)
-31	211-0101-00			1	SCREW, MACHINE: 4-40 x 0.25" 100 DEG, FLH STL
					- - - * - - -
-32	- - - - - -			1	CKT BOARD ASSY: PROGRAM DATA (SEE EPL FOR PN)
					(ATTACHING PARTS)
-33	211-0116-00			2	SCR, ASSEM WSHR: 4-40 x 0.312 INCH, PNH BRS
					- - - * - - -
	- - - - - -			-	CIRCUIT BOARD ASSY INCLUDES
-34	136-0252-04			96	SOCKET, PIN CONN: 0.188 INCH LONG
-35	388-1808-00			2	CIRCUIT CARD: CONNECTOR
-36	210-0201-00			1	TERMINAL, LUG: SE #4
-37	131-0294-00			2	CONN, RCPT ELEC: 36 PIN FEMALE
					(ATTACHING PARTS FOR EACH)
-38	211-0062-00			2	SCREW, MACHINE: 2-56 x 0.312 INCH, PNH STL
-39	210-0001-00			2	WASHER, LOCK: INT, 0.13 ID x 0.18 INCH OD
-40	210-0405-00			2	NUT, PLAIN HEX: 2-56 x 0.188 INCH
					- - - * - - -
-41	358-0161-00			1	BSHG, STRAIN RLF:
-42	175-0825-00			FT	CABLE, ELECT: 5 INCHES
-43	131-0817-00			2	CONN, RCPT, ELECT

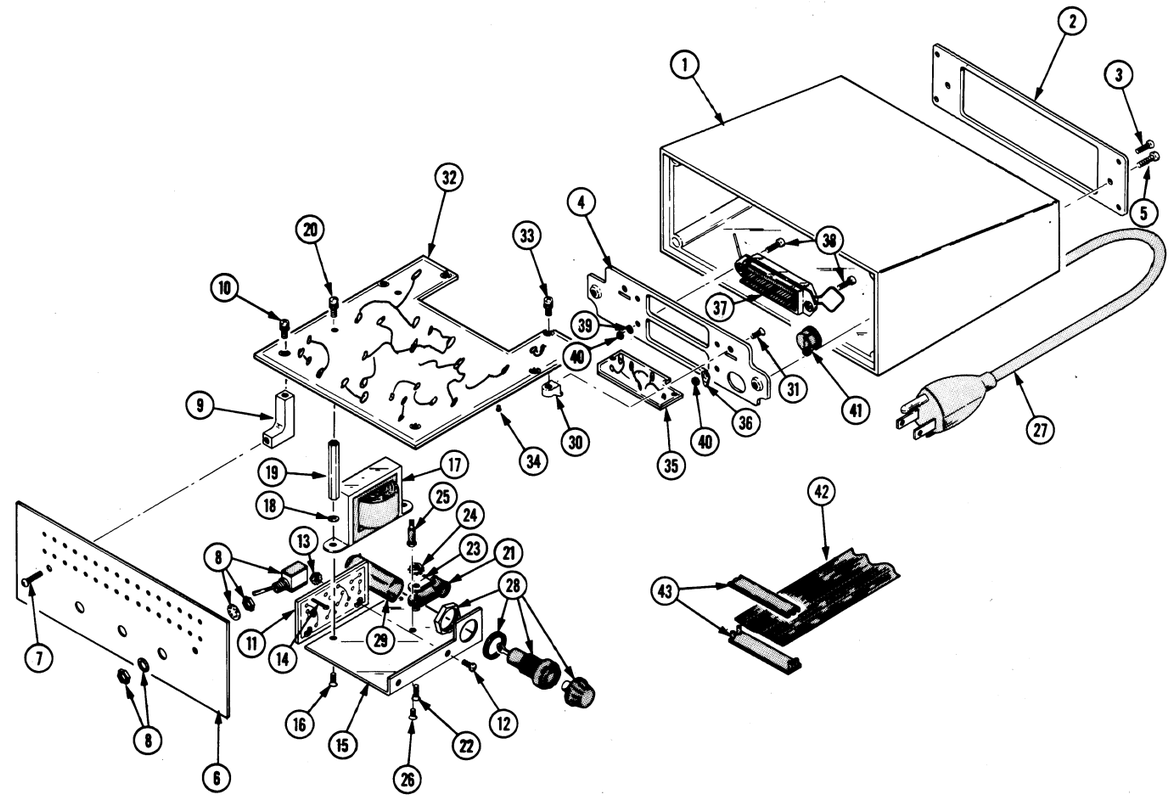

067-0663-00
EXPLODED VIEW