TEKTRONIX®

5A26
DUAL DIFFERENTIAL AMPLIFIER

INSTRUCTION MANUAL

TEKTRONIX®

5A26
DUAL DIFFERENTIAL AMPLIFIER

INSTRUCTION MANUAL

Tektronix, Inc.
P.O. Box 500
Beaverton, Oregon 97077

Serial Number _____

070-1947-00

First Printing JUNE 1975

WARRANTY

All TEKTRONIX instruments are warranted against defective materials and workmanship for one year. Any questions with respect to the warranty should be taken up with your TEKTRONIX Field Engineer or representative.

All requests for repairs and replacement parts should be directed to the TEKTRONIX Field Office or representative in your area. This will assure you the fastest possible service. Please include the instrument Type Number or Part Number and Serial Number with all requests for parts or service.

Specifications and price change privileges reserved.

U.S.A. and foreign TEKTRONIX products covered by U.S. and foreign patents and/or patents pending.

TABLE OF CONTENTS

LIST OF ILLUSTRATIONS

LIST OF TABLES

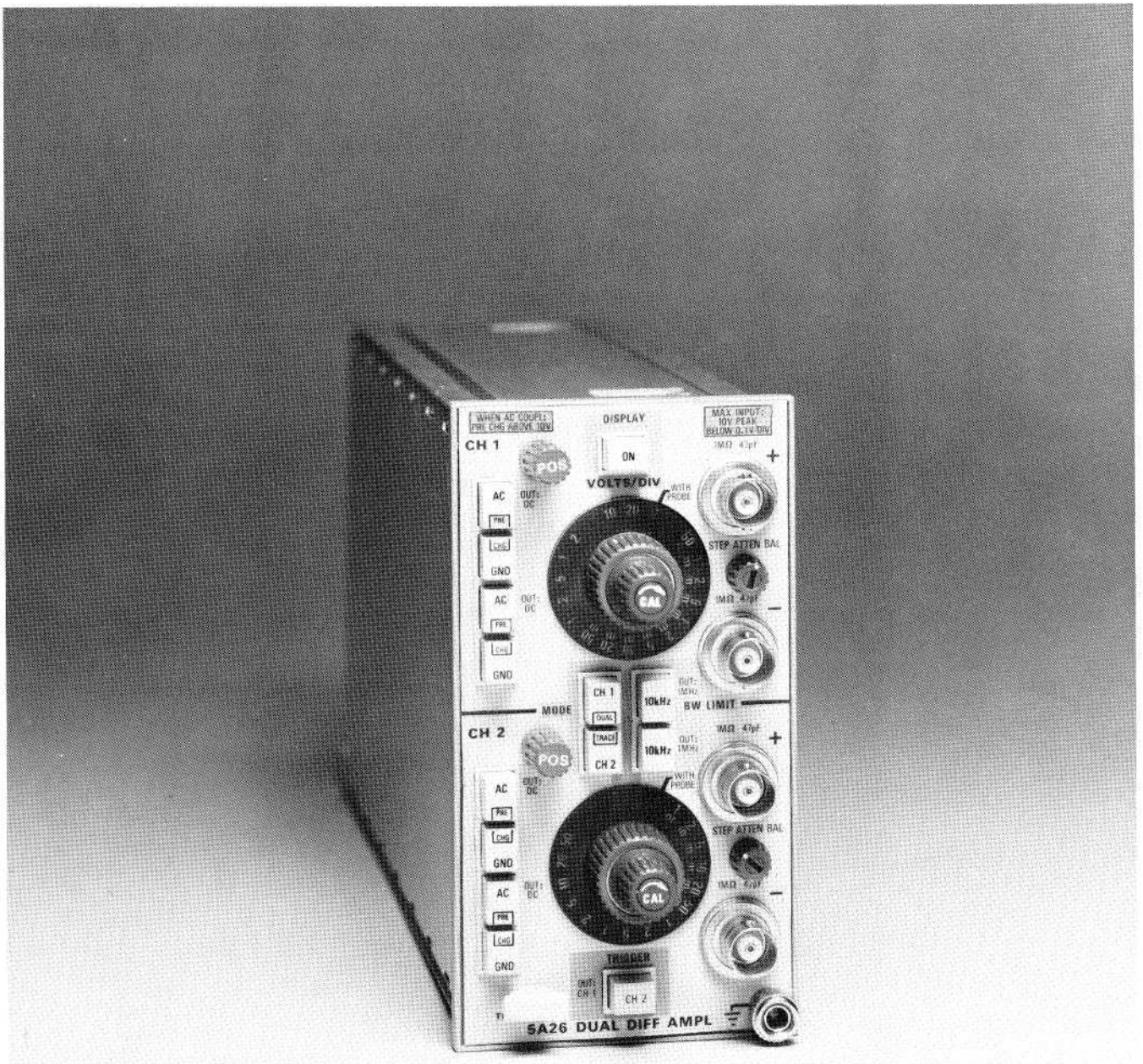

1947-1

Fig. 1-1. 5A26 Dual Differential Amplifier.

OPERATING INSTRUCTIONS

The 5A26 Dual Differential Amplifier is a dual-trace high-gain differential amplifier plug-in for use with Tektronix 5000 Series Oscilloscopes. The unit contains two identical independent amplifier channels that feature high sensitivity and a high common-mode rejection ratio.

Each channel has a bandwidth capability of dc to 1 megahertz, and a front-panel push button switch allows the reduction of the upper bandwidth limit, thus increasing the signal-to-noise ratio for low frequency applications. Either channel may be used for single channel displays, or electronically switched to produce dual-trace displays.

An illuminated knob skirt provides a deflection factor readout, which is also displayed on the crt when used in an oscilloscope with readout capabilities.

PREPARATION FOR USE

The 5A26 is calibrated and ready for use when received. The unit may be installed in any plug-in compartment. Refer to the oscilloscope instruction manual for information on X-Y operation. To install, align the upper and lower grooves of the 5A26 with the plug-in compartment tracks, and fully insert the 5A26 until it locks into place. To remove, pull the release latch to disengage the 5A26 from the oscilloscope.

CONTROLS, CONNECTORS, AND INDICATORS

The following describes the function of the front-panel controls, connectors, and indicators. Refer to Fig. 1-2 for the location of the controls, connectors and indicators. More information is given under Detailed Operating Information.

(1) **DISPLAY Push Button**—Applies and removes logic levels to the oscilloscope system to enable or disable plug-in operation. Switch is functional only when plug-in is operated in one of the vertical deflection plug-in compartments.

(2) **POS Controls**—Positions display vertically.

(3) **BW LIMIT Push Buttons**—Allows reduction of the upper bandwidth limit to increase the signal-to-noise ratio for low-frequency applications. Selects upper bandwidth limit at either 1 megahertz (button out) or 10 kilohertz (button in).

(4) **VOLTS/DIV Switches**—Volts per major graticule division. Selects calibrated deflection factors from 50 microvolts/division to 5 volts/division; 16 steps in a 1-2-5 sequence. Knob skirt is illuminated to indicate deflection factor, and 10X scaling of both knob skirt and crt readout is provided automatically when a 10X coded probe is used.

(5) **CAL (Variable VOLTS/DIV) Controls**—Provides uncalibrated continuously variable deflection factors between the calibrated settings of the VOLTS/DIV switch and extends the deflection-factor range to 12.5 volts/division.

(6) **STEP ATTEN BAL Adjustments**—Balances the input amplifier for minimum trace shift throughout the deflection factor gain-switching range.

(7) **Input Coupling Push Buttons**
AC—OUT:DC. Button pushed in selects capacitive coupling of signal applied to associated + or — input connector; button out selects direct coupling of input signal.

GND. Grounds the preamplifier input and connects input signal to ground through a 1 megohm resistor.

PRE CHG. Both AC and GND buttons pushed in permits precharging of the coupling capacitor to the input signal dc level. Release GND button for measurement.

(8) **MODE Push Buttons**—Select channel to be displayed and illuminate the proper deflection factor setting (1X or 10X) on the VOLTS/DIV switch knob skirt. Both buttons pushed in provides a dual-trace display.

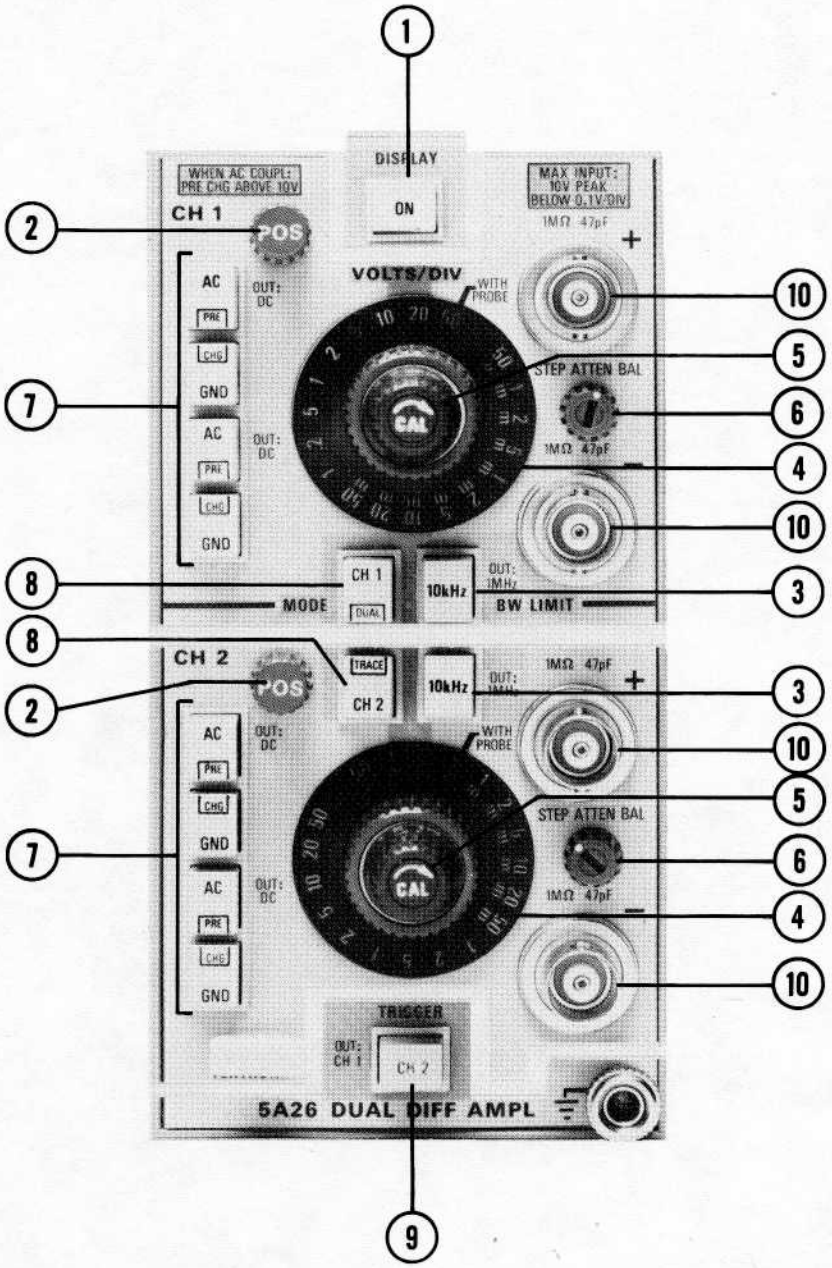

1947-2

Fig. 1-2. Front-panel controls, connectors, and indicators.

(9) **TRIGGER Push Button**—Selects time base triggering signal from either channel.

(10) **+ and – Input Connectors**—BNC connectors for application of external voltage signals. Connector labeled + indicates that a positive-going signal will cause upward deflection; connector labeled – indicates that a positive-going signal will cause downward deflection. Connectors include coded-probe input rings for activating the readout when using readout-coded probes.

BASIC OPERATION

Preparation

The following procedures are intended to help place the trace on the screen quickly and prepare the instrument for immediate use:

a. Insert 5A26 all the way into oscilloscope plug-in compartment.

b. Turn oscilloscope Intensity control to midrange and turn oscilloscope system power on. Preset time-base and triggering controls for 2 millisecond/division sweep rate and automatic triggering.

c. Set 5A26 front-panel controls as follows:

DISPLAY	ON (button in)
TRIGGER	OUT: CH 1 (button out)
POS	Midrange
BW LIMIT	OUT: 1 MHz (button out)
VOLTS/DIV	5
STEP ATTEN BAL	Midrange
CH 1 and CH 2 + Input Coupling	
AC	OUT: DC (button out)
GND	GND (button in)
CH 1 and CH 2 – Input Coupling	
AC	OUT: DC (button out)
GND	GND (button in)
MODE	CH 1 and CH 2 (buttons in)

d. Adjust intensity control for normal viewing. Traces should appear near graticule center.

e. Set the VOLTS/DIV switches to .1. If traces shift, adjust the STEP ATTEN BAL control as described in Step Attenuator Balance Adjustment procedure.

f. Move CH 1 trace 2 divisions below graticule horizontal centerline, and CH 2 trace to bottom of graticule with POS controls.

g. Apply 400 millivolt peak-to-peak signal from oscilloscope calibrator loop with a test lead or 1X probe to CH 1 + input connector.

h. Release CH 1 + GND button. Display will be a square wave 4 divisions in amplitude with bottom of display at reference established in step (f).

i. Position bottom of square wave to graticule horizontal centerline.

j. Push in CH 1 + AC button and note that display shifts downward 2 divisions.

k. Disconnect test lead from CH 1 + input and connect to CH 2 + input.

l. Push in TRIGGER button for CH 2 triggering and repeat steps (f) through (j) for CH 2 operation.

Step Attenuator Balance Adjustment

When the STEP ATTEN BAL control is not properly adjusted, the display will shift vertically (due to a dc imbalance in the amplifier) as the VOLTS/DIV switch is rotated throughout its range. The shift is more noticeable on the most sensitive positions.

a. Set VOLTS/DIV switch to 5. Ground both + and — inputs (GND buttons pushed in) and position trace to graticule horizontal centerline.

b. Adjust STEP ATTEN BAL control for minimum trace shift as VOLTS/DIV switch is rotated throughout its range.

Gain Check

When the 5A26 is first inserted into a plug-in compartment, the amplifier gain may be checked and adjusted if necessary. See Adjustment Procedure in Section 4 of this manual for complete instructions.

DETAILED OPERATING INFORMATION

Applying Signals

CAUTION

If the maximum input voltage rating at the gates of the input FET's is exceeded, the gates are clamped at about + or — 10 volts. If the signal source can supply more than 1/16 ampere, the input protective fuse(s) will open.

When measuring unknown voltages, use the highest deflection factor first. If the deflection is too small to make the measurement, switch to a lower deflection factor.

Pre-Charging

When only the ac component of a signal having both ac and dc components is to be measured, the pre-charge circuit permits charging the coupling capacitor to the input signal dc level.

CAUTION

If the 5A26 input is connected to a large dc voltage source (10 volts peak or more), use the precharge provision. Damage to the signal source could result since the peak current through the ac coupling capacitor and the input protection circuitry is limited only by the signal source internal resistance.

a. Before connecting 5A26 to a signal containing a dc component, push in AC and GND buttons. Then connect input to circuit under test.

b. Wait about 1 second for coupling capacitor to charge.

c. Release GND button and ac component can be measured in usual manner.

Signal Input Connectors

When connecting signals to the + and — input connectors on the 5A26, consider the method of coupling that will be used. Sometimes unshielded test leads can be used to connect the 5A26 to a signal source, particularly when a high level, low-frequency signal is monitored at a low impedance point. However, when any of these factors are missing, it becomes increasingly important to use shielded signal cables. In all cases, the signal-transporting leads should be kept as short as practical.

When making single-ended input measurements (conventional amplifier operation), be sure to establish a common ground connection between the device under test and the 5A26. The shield of a coaxial cable is normally used for this purpose.

In some cases, differential measurements require no common ground connection, and therefore are less susceptible to interference by ground-loop currents. Some problems with stray magnetic coupling into the signal transporting leads can also be minimized by using a differential rather than a single-ended measurement. These considerations are discussed later in this section under Differential Operation.

It is always important to consider the signal source loading (and resulting change in the source operating characteristics) due to the signal-transporting leads and the input circuit of the 5A26. The circuit at the input connectors can normally be represented by a 1 megohm resistance to ground paralleled by about 47 picofarads. A few feet of shielded cable (20 to 40 picofarads per foot) may increase the parallel capacitance to 100 picofarads or more. In many cases, the effects of these resistive and capacitive loads may be too great and it may be desirable to minimize them through the use of an attenuator probe.

Attenuator probes not only decrease the resistive-capacitive loading of a signal source, but also extend the measurement range of the 5A26 to include substantially higher voltages. Passive attenuator probes having attenuation factors of 10X, 100X, and 1000X, as well as other special-purpose types, are available through your Tektronix Field Engineer or Field Office.

Some measurement situations require an extremely high resistance input to the 5A26 with very little source loading

or signal attenuation. In such situations, a passive attenuator probe cannot be used. However, this problem may be solved by using a FET Probe or the high-impedance input provision of the 5A26 as described under High-Impedance Input.

High-Impedance Input

In the 50 m through 50 μ positions of the VOLTS/DIV switch, where the input attenuator is not used, the internal gate return resistors alone establish the 1 megohm input resistance. The removal of the strap from the Preamplifier circuit board (see Fig. 4-4, Channel 1 and 2 Preamplifier circuit board component and test point locations in the Diagrams and Parts Lists section) disconnects these resistors from ground and permits the input FET gates to float, providing a very high input impedance.

The input signal must be kept to relatively low amplitudes, since the deflection factor is restricted to 50 millivolts/division through 50 microvolts/division, and dc coupling must be used to provide a dc path for the FET gate current.

NOTE

In the 0.1 volt to 5 volt range of the VOLTS/DIV switch, the input impedance is paralleled by the resistors in the attenuator. When the strap is removed, the attenuation ratio is affected, causing the deflection factors in this range to be incorrect. To determine the deflection factor, check the deflection with an input signal of known amplitude.

The signal source impedance is an important factor, since gate current will produce an offset. For example, a 100 picoampere gate current through 10 megohms produces a 1 millivolt offset, which may result in significant error where small voltages are of concern.

The high-frequency response will also depend upon the signal source impedance, since various shunt capacitances between the source and the input gate must charge and discharge through that impedance.

Display Polarity

Single-ended signals applied to the + input connector produce a display in phase with the input signal. Signals applied to the − input connector will be inverted.

A similar polarity relationship exists for differentially applied signals, but pertains to the direction of voltage change at one input with respect to the other, rather than with respect to chassis potential.

Deflection Factor

The amount of trace deflection produced by a signal is determined by the signal amplitude, the attenuation (if any) of the probe, the setting of the VOLTS/DIV switch, and the setting of the Variable control. The deflection factor settings are calibrated only when the Variable control is rotated fully clockwise into the detent position.

The range of the Variable control is at least 2.5:1. It provides uncalibrated deflection factors covering the full range between the calibrated settings of the VOLTS/DIV switch. The Variable control can be set to extend the deflection factor to at least 12.5 volts/division.

To reduce noise and obtain a more usable display when the VOLTS/DIV switch is set to the more sensitive positions, push in the BW LIMIT button to reduce the bandwidth to 10 kHz if this limit does not appreciably distort the desired features of the signal under observation.

Voltage Comparison Measurements

Some applications require deflection factors other than the fixed values provided by the VOLTS/DIV switch. One such application is comparison of signal amplitudes by ratio rather than by absolute voltage. To accomplish this, apply a reference signal to either + or − inputs of the 5A26, and set the VOLTS/DIV switch and Variable control so that the reference display covers the desired number of graticule divisions. Do not change the Variable control settings throughout the subsequent comparisons. However, the settings of the VOLTS/DIV switch can be changed to accommodate large ratios. In doing so, regard the numbers which designate the switch positions as ratio factors rather than voltages.

Differential Operation

Single-ended measurements often yield unsatisfactory results because of interference resulting from ground-loop currents between the 5A26 and the device under test. In other cases, it may be desirable to eliminate a dc voltage by means other than the use of a dc blocking capacitor, which could limit the low-frequency response.

These limitations of single-ended measurements are effectively eliminated by connecting the + input and − input to selected points in the test circuit. Since the chassis of the 5A26 need not be connected in any way to the test circuit, there are few limitations to the selection of these test points. In any case, do not exceed the maximum safe input voltages.

The + and − AC buttons should both be set to the same positions, depending on the method of signal coupling required.

Only the voltage difference between two signals is amplified and displayed in differential measurements, while the common-mode signals (common in amplitude, frequency and phase) are rejected.

The ability of the 5A26 to reject common-mode signals is indicated by the common-mode rejection ratio (cmrr). Cmrr is at least 100,000:1 at the input connectors from 50 microvolts/division to 50 millivolts/division when signals between dc and 30 kilohertz are dc coupled to the inputs. To illustrate this characteristic, assume that a single-ended input signal consists of an unwanted 60 hertz signal of 1 volt peak-to-peak, plus a desired signal of 1 millivolt peak-to-peak. If an attempt is made to display the described signal (single-ended measurement) at 0.2 millivolts/division, the 60 hertz signal will produce a deflection equivalent to 5000 divisions and the 1 millivolt signal will be lost.

If the same 1 millivolt signal is measured differentially with the 60 hertz signal common to both inputs, no more than one part in 100,000 of the common-mode signal will appear in the display. The desired signal will produce a display of 5 divisions, with not more than 0.1 division of display produced by the common-mode signal (cmrr not specified when residual display is 0.1 division or less).

There are a number of factors which can degrade common-mode rejection. The principle requirement for maximum rejection is that the common-mode signal arrives at the input FET gates in precisely the same form. A difference of only 0.01% in the attenuation factors of the input attenuators may reduce the rejection ratio to 10,000:1. Likewise, any difference in source impedance at the two points in the source under test will degrade the rejection ratio. Attenuator probes which do not have adjustable resistance and capacitance may reduce the rejection ratio to 100:1 or less.

Outside influences such as magnetic fields can also degrade the performance, particularly when low level signals are involved. Magnetic interference may be minimized by using identical signal-transporting leads to the two inputs and twisting the two leads together over as much of their length as possible.

Voltage Probes

In general, probes offer the most convenient means of connecting a signal to the input of the 5A26. Tektronix probes are shielded to prevent pickup of electrostatic interference. A 10X attenuator probe offers a high input impedance and allows the circuit under test to perform very close to normal operating conditions. See your Tektronix, Inc., catalog for characteristics and compatibility of probes for use with this system.

CODED PROBES. The 5A26 is designed for compatibility with coded probes, such as the Tektronix P6062A 1X/10X Passive Probe. The + and – input connectors have an outer ring to which the coding pin on the probe connector makes contact. This type of probe allows the vertical deflection factor indicated by the readout to correspond with the actual voltage at the probe tip, eliminating the need to consider the attenuation factor when measuring the signal amplitude on the graticule scale.

Differential Measurements

The following adjustment procedure is recommended when preparing to use two Tektronix P6062A probes for differential measurements in the 10X mode.

a. Connect one probe for dc-coupled, single-ended operation to CH 1 + input. Obtain triggered display of an appropriate square wave, such as that from a calibrator or square-wave generator. Compensate probe square-wave response with probe compensation adjustment.

b. Connect a second probe for dc-coupled operation to CH 1 – input. Apply 100 volt peak-to-peak square wave to both probes. Free-run sweep and adjust probe compensation adjustment of second probe for minimum display amplitude.

c. Steps (a) and (b) match the probes for use at any sensitivity that employs the particular input attenuator (1X or 100X) used in steps (a) and (b). When it is necessary to use the other input attenuator, steps (a) and (b) should be repeated.

d. Repeat steps (a), (b), and (c) for Channel 2.

e. When examining a small differential signal in the presence of relatively large common-mode components, adjust probe by temporarily connecting both probes to either of the two signal sources.

SPECIFICATIONS

TABLE 1-1
Electrical Specifications

Characteristics	Performance Requirement
Deflection Factor	
Calibrated Range	50 μV/div to 5 V/div in a 1, 2, 5 sequence.
Accuracy	Within 2% of deflection factor setting.
Uncalibrated Range	Variable VOLTS/DIV control provides continuously variable deflection factor between calibrated settings and extends deflection factor range to 12.5 V/div.
Frequency Response	
Bandwidth (8 Div Reference)	
DC (Direct) Coupled	
1 MHz	Dc to at least 1 MHz.
10 kHz	Dc to 10 kHz within 20%.
AC (Capacitive) Coupled	
1 MHz	2 Hz or less to at least 1 MHz.
10 kHz	2 Hz or less to 10 kHz within 20%.
Step Response	
Aberrations	+2%, −2% or less. Total not to exceed 4% p-p.
Input R and C	1 MΩ within 0.15% paralleled by approximately 47 pF.
Maximum Safe Input Voltage	
DC (Direct) Coupled	
50 μV/Div to 50 mV/Div	10 V (dc + peak ac).
100 mV/Div to 5 V/Div	350 V (dc + peak ac).
AC (Capacitive) Coupled	
50 μV/Div to 50 mV/Div	350 V dc (coupling capacitor pre-charged) 10 V peak ac.
100 mV/Div to 5 V/Div	350 V (dc + peak ac).
DC Rejection	
AC (Capacitive) Coupled	At least 100,000:1 after 20 minute warmup.
Input Gate Current	100 pA or less (100 μV or less depending on external loading) at +25°C.
Common Mode Rejection	
DC (Direct) Coupled	
50 μV/Div to 50 mV/Div	At least 100,000:1 from dc to 30 kHz with up to 20 V p-p sine wave.
100 mV/Div to 5 V/Div	At least 300:1 from dc to 30 kHz with up to 100 V p-p sine wave.

TABLE 1-1 (CONT.)
Electrical Specifications

Characteristics	Performance Requirement
Common Mode Rejection (continued)	
AC (Capacitive) Coupled	
50 μV/Div to 50 mV/Div	At least 20,000:1 at 5 kHz and above, decreasing to not less than 2000:1 at 60 Hz.
With 2 P6062A Probes	400:1 at 10X probe attenuation.
Displayed Noise (Tangentially Measured)	30 μV or less at full bandwidth.
Channel Isolation at 1 MHz (Single-Ended)	At least 100:1 with 8 div sine wave applied to one channel at 2 V/div and other channel at 1 mV/div with no signal applied.
Channel Isolation at 30 kHz (Common Mode)	50 μV or less at any deflection factor with 20 V p-p sine wave applied to + and − inputs of either channel.

TABLE 1-2
Environmental Specifications

Characteristics	Performance Requirement
Temperature	
Operating	0°C to +50°C.
Storage	−55°C to +70°C.
Altitude	
Operating	To 15,000 Feet.
Storage	To 50,000 Feet.
Vibration	
Operating	15 minutes along each of 3 major axes at a total displacement of 0.015 inch with frequency varied from 10 Hz to 50 Hz to 10 Hz in 1 minute sweeps. Hold for 3 minutes at 50 Hz. All major resonances must be above 50 Hz.
Shock	
Operating and Storage	To 30 g's, 1/2 sine, 11 ms duration, 2 shocks per axis in each direction for a total of 12 shocks.

TABLE 1-3
Physical Specifications

Characteristics	Description
Weight	Approximately 2 lbs, 3 oz. (1 kg).
Dimensions	See Fig. 1-3, Dimensions.

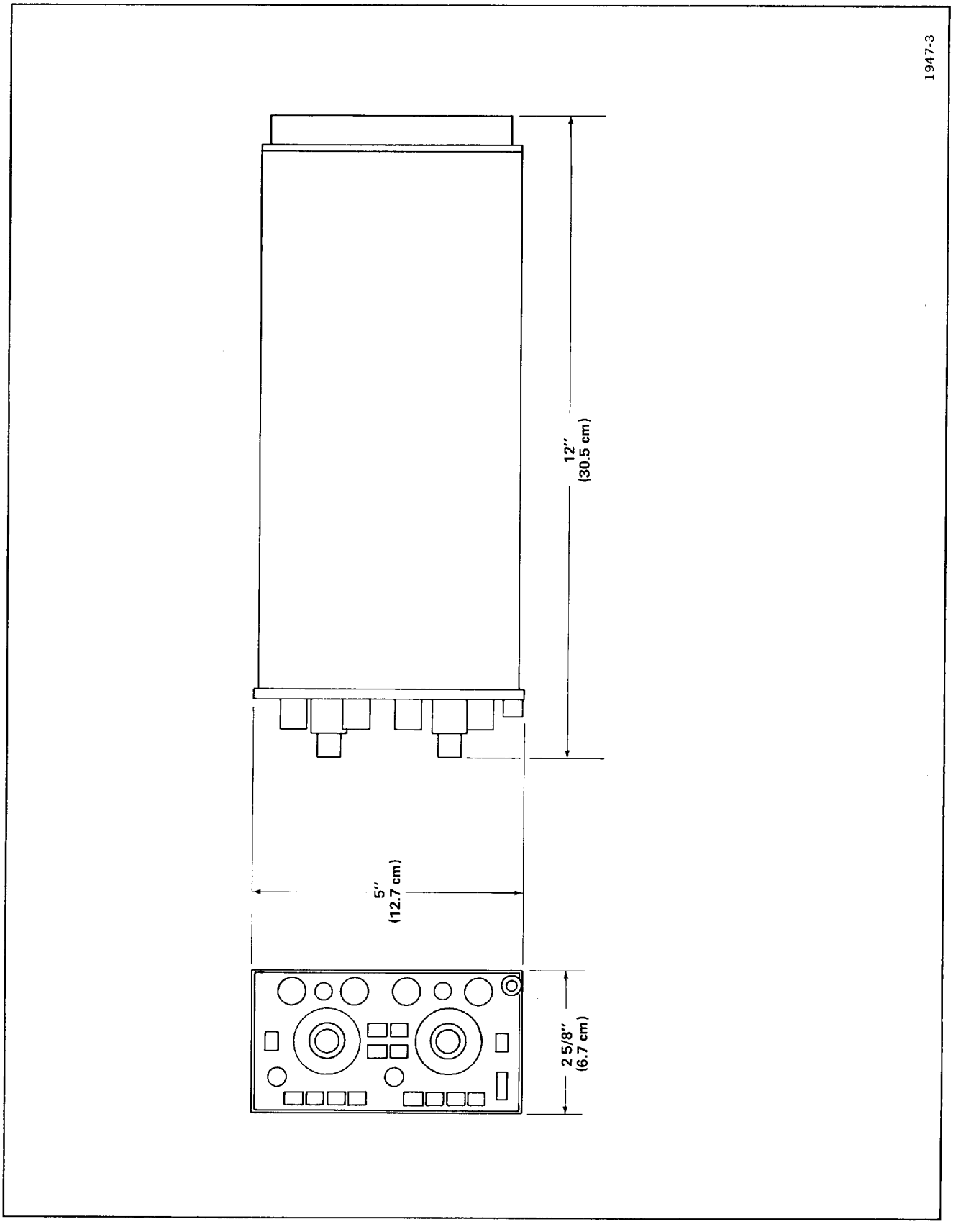

Fig. 1-3. Dimensions.

THEORY OF OPERATION

This section of the manual describes the operation of the circuits in the 5A26 Dual Differential Amplifier unit. Complete schematic diagrams and an overall block diagram of the unit are given on pullout pages at the back of this manual. The channel 1 and channel 2 circuitry is essentially identical. The following block diagram and circuit operation discussions apply to channel 1 with exceptions included where applicable.

BLOCK DIAGRAM DESCRIPTION

When the DISPLAY button is pressed, a logic level is applied to the oscilloscope to enable 5A26 operation (switch function is limited to operation in a vertical deflection compartment).

Signals applied to the + and – input connectors can be passed directly through the input coupling switches to the attenuators (dc coupled) or they can be capacitively (ac) coupled to block the dc component of the signal. The GND switch provides a ground reference to the Preamplifier input.

The Input Attenuator consists of frequency-compensated voltage dividers. 1X attenuation is provided for the 50 μ to 50 m positions of the VOLTS/DIV switch, and 100X attenuation is provided for the .1 to 5 positions. Balance to a low-frequency common-mode signal between the attenuators of the two inputs is set by adjustment of the internal LF CMR potentiometer.

From the Input Attenuator, the signal is passed directly to the Preamplifier. The inputs to the Preamplifier are fuse and diode protected. The Preamplifier consists of two identical operational amplifiers connected in a differential configuration. Common-mode signals between ground and the two inputs are rejected, due to a bootstrapped floating power supply that moves with the common-mode signal to maintain constant operating characteristics of the active devices. The difference between the two inputs is amplified. The constant current return facilitates the dc balance of the Preamplifier outputs.

From the Preamplifier, the signal is coupled directly to the Gain Switching Amplifier. Two identical operational amplifiers and a series-parallel resistor network provide the proper gain for each VOLTS/DIV switch setting.

The BW LIMIT 10 kHz switch places a capacitor across the two output lines to reduce the bandwidth and, thus, limit the noise. The signal is then passed to the Output Amplifier through an emitter-follower isolation stage.

The output differential amplifier is operated push-pull, presenting a signal to the output terminal that is of the same polarity as that applied to the Preamplifier input. The front-panel Variable VOLTS/DIV (CAL) and internal gain controls provide a means of varying the gain of the 5A26. A positioning-current driver is connected to the output lines to alter the quiescent trace position.

A triggering signal is tapped from the emitter-follower isolation stage, amplified and made available to an associated time-base plug-in unit. Triggering signal amplitude is about 0.25 volts per displayed division.

Channel switching is accomplished by the plug-in MODE buttons and the channel switch signal from the oscilloscope. Electronic switching provides a display of either or both channels (dual-trace). The switching rate in dual-trace operation is determined by the channel-switch signal repetition rate from the oscilloscope.

The VOLTS/DIV switch control is made up of a series of cams and contacts that switch input attenuators, select the proper gain-setting resistors in the Gain Switching Amplifier, and provide the proper crt readout data.

Either of two lamp bulbs behind the knob skirt on the VOLTS/DIV switch illuminate the selected deflection factor. One lamp lights for 1X deflection factor; the other lights when a readout-coded probe is attached to the + or – input connectors to indicate a 10X deflection factor.

CIRCUIT OPERATION

Circuits unique to this instrument are described in detail in this discussion. Circuits commonly used in the electronics industry are not described in detail. If more information is desired on these commonly used circuits, refer to the following textbooks.

Phillip Cutler, "Semiconductor Circuit Analysis", McGraw-Hill, New York, 1964.

Jacob Millman and Herbert Taub, "Pulse Digital and Switching Waveforms", McGraw-Hill, New York, 1965.

Albert Paul Malvino, "Transistor Circuit Approximations", McGraw-Hill, New York, 1973.

Gordon V. Deboo, "Integrated Circuits and Semiconductor Devices", McGraw-Hill, New York, 1971.

Lloyd P. Hunter (Ed.), "Handbook of Semiconductor Electronics", third edition, McGraw-Hill, New York, 1970.

The numbers inside the diamonds after a heading refer to the schematic diagram for that circuit located at the back of this manual.

PREAMPLIFIER ◇1◇

Plug-In Logic

When DISPLAY button is pressed, a logic level is applied to the electronic switching circuit in the oscilloscope to enable plug-in operation. Power is applied to illuminate the VOLTS/DIV knob skirt behind the proper deflection factor when the MODE button is pressed in.

Input Coupling

Signals applied to the front-panel + and − input connectors may be capacitive coupled (ac), direct coupled (dc) or internally grounded through a capacitor and resistor. Input coupling is selected by means of two push button switches at each input; S2C and D for the + input and S2A and B for the − input.

A signal applied to the + input with both buttons in the out position (dc coupled) is passed directly to the Input Attenuator. When the AC button is pressed in, C12 is placed in the circuit to ac couple signals of about 2 hertz (−3 dB point) and higher to the attenuator. Capacitor C12 blocks any dc component of the signal. When the GND button is pressed in, a ground reference is provided to the input of the amplifier without the need to remove the applied signal from the input connector.

NOTE

When ac coupled with dc levels of 10 volts or more, both the AC and GND buttons should be pressed in (PRE CHG) while input connections are made or broken, or when voltage levels are changed. This allows the coupling capacitor to charge without opening the input fuses or overdriving the amplifier.

Input Attenuators

The Input Attenuators consist of frequency-compensated voltage dividers that provide 100X attenuation in the .1 to 5 positions of the VOLTS/DIV switch. For dc and low-frequency signals, the dividers are essentially resistive (attenuation ratio determined by the resistance ratio). Balance between the attenuators of the two inputs for low-frequency common-mode signals is set by adjusting R9, LF CMR. At higher frequencies, the capacitive reactance becomes effective and the impedance ratio determines the attenuation.

In addition to providing constant 100X attenuation at all frequencies within the bandwidth capabilities of the instrument, the Input Attenuator maintains a constant input RC characteristic (1 megohm paralleled by about 47 picofarads) for the .1 to 5 positions of the VOLTS/DIV switch.

Input Protection

Input protection consists of fuses F20 and F30 and diodes CR21, CR24, CR31, and CR34. If the signal should reach a level sufficient to forward bias one of the protection diodes (a potential greater than about 12.5 volts), current will be conducted through that diode, protecting the input FET's. If that current should exceed the fuse rating, the fuse(s) will open.

Preamplifier

The Preamplifier consists of two identical operational amplifiers connected in a differential configuration.

The operational amplifiers consist of Q54A, Q60A, and Q64A on the − input side, and Q54B, Q60B and Q64B on the + input side. Transistors Q54A and Q54B provide a

voltage follower input to output transistors Q64A and Q64B while Q60A provides additional open-loop gain. Total gain of the stage is determined by R58 and R78 between the two amplifiers, and resistors R64 and R84.

Quiescently, the two sides of the amplifier are balanced. When a differential signal is applied to the gates of Q54A and Q54B, signal current is developed through resistors R58 and R78. Conduction of Q64A and Q64B is changed by the amount of signal current with the output voltage developed across R64 and R84. The output is a push-pull signal, opposite in polarity to the signal applied to the inputs.

To minimize trace shift as different vertical deflection factors are selected, the outputs at the Q64A and Q64B collectors are dc balanced at equal potentials so that the voltage across the gain-setting resistors in the Gain-Switching Amplifier is zero at all settings of the VOLTS/DIV switch. This dc balancing is achieved by adjusting R89, Atten Bal Range and R72, STEP ATTEN BAL.

Common-Mode Rejection

One of the primary functions of the Preamplifier is to reject any common-mode component of the input signal and amplify only the difference. Assume that the inputs are tied together and a voltage is applied to the common input. The amplifier differential output is ideally zero, and would actually be zero provided that the characteristics of all corresponding elements on the two sides of the amplifier were matched (e.g., Q54A and Q54B transconductance and μ, Q60A and Q60B beta, current sources, etc.). In practice, any mismatch will cause a differential output.

Floating Power Supply

A Floating Power Supply consisting of Q39, Q44, Q48, and Zener diodes VR40 and VR42 minimizes inherent common-mode difficulties and, therefore, improves the common-mode rejection ratio (refer to Fig. 2-1). Transistor Q44 is a constant-current high-impedance source, and Q39 is the current return.

The input to the bootstrap (X1 gain) amplifier is connected to the junction of R58 and R78. The bootstrap amplifier portion of the supply consists of emitter-follower Q48 and dc level-shifting Zener diodes VR40 and VR42. The collector impedance of Q39 presents minimum loading to the Q48 output and maintains the gain of the amplifier (bootstrap efficiency) very close to one.

The entire power supply and amplifier voltages move an amount equal to the common-mode voltage to maintain a constant operating characteristic of the elements in the Preamplifier stage. Since no common-mode signal current is developed, the output at the collectors of Q64A and Q64B remains unchanged; that is, the common-mode signal is rejected.

Variable capacitor C59, HF CMR, is adjusted to normalize the effective capacitance of the active devices on one side of the amplifier to the other.

OUTPUT AMPLIFIERS ②

Gain-Switching Amplifier

The Gain-Switching Amplifier consists of two identical operational amplifiers.

The operational amplifiers consist of Q205A, Q208A, and Q210A on the – input side and Q205B, Q208B, and Q210B on the + input side. Total gain of the stage is determined by R210, R220 and the setting of the VOLTS/DIV control which selects the series-parallel combination of R203, R213, and R228 through R236.

Potentiometer R225, Var Bal 1, located in the collector circuit of transistors Q210A, and Q210B, is adjusted with no input signal to set the voltage across the Variable VOLTS/DIV control, R264, in the Output Amplifier stage to zero volts. With both sides of the amplifier balanced, trace deflection is prevented as the Variable VOLTS/DIV control is rotated throughout its range.

Normally, the frequency response of the Gain Switching Amplifier is from dc to at least 1 megahertz, however, for low-frequency applications where high input sensitivities are used, the overall frequency response can be limited to about 10 kilohertz to reduce noise referred to the input. This is achieved by pushing in the BW LIMIT 10 kHz switch, S239, which connects C239 across the output of the Gain Switching Amplifier.

Isolation Stage

The differential signal developed at the collectors of Q210A and Q210B is passed through emitter followers Q242 and Q252 to the Output Amplifier. Transistors Q242 and Q252 isolate the Gain Switching Amplifier from the loading of the Output Amplifier and Trigger Amplifier.

Output Amplifier

The Output Amplifier consists of push-pull amplifiers Q260 and Q270. With a signal applied, potentiometer R273,Gain 1,

provides emitter degeneration. The gain is determined by the total emitter resistance which allows the overall gain of the 5A26 to be adjusted to match the mainframe requirements. Also, the Variable VOLTS/DIV control, R264, provides continuously variable gain to 2.5 times the calibrated deflection factor setting.

Transistors Q267 and Q277 are positioning-current drivers. Position (POS) control, R274, provides an adjustable change in the conduction of the transistors to provide a current that either adds to or substracts from the Q260-Q270 currents to alter the quiescent vertical position of the display.

Channel Switching

Channel switching is accomplished by Q282, Q292, Q286 and Q386. The channel switch signal from the mainframe through pin B21 sets the bias on Q386 while the bias on Q286 is determined by the MODE buttons. The bias level at the base of Q286 relative to that at the base of Q386 determines which of these transistors is on. With the CH 1 MODE button pressed in and the CH 2 MODE button out, the bias level on Q286 is lower (more negative) than that at Q386, which turns Q286 off and Q386 on. With Q286 turned off, +5 volts dc through R286 reverse-biases diodes CR283 and CR293, which turns on Q282 and Q292 in the channel switch stage. Thus, the channel 1 signal is coupled to the mainframe through interface connector pins A7 and B7.

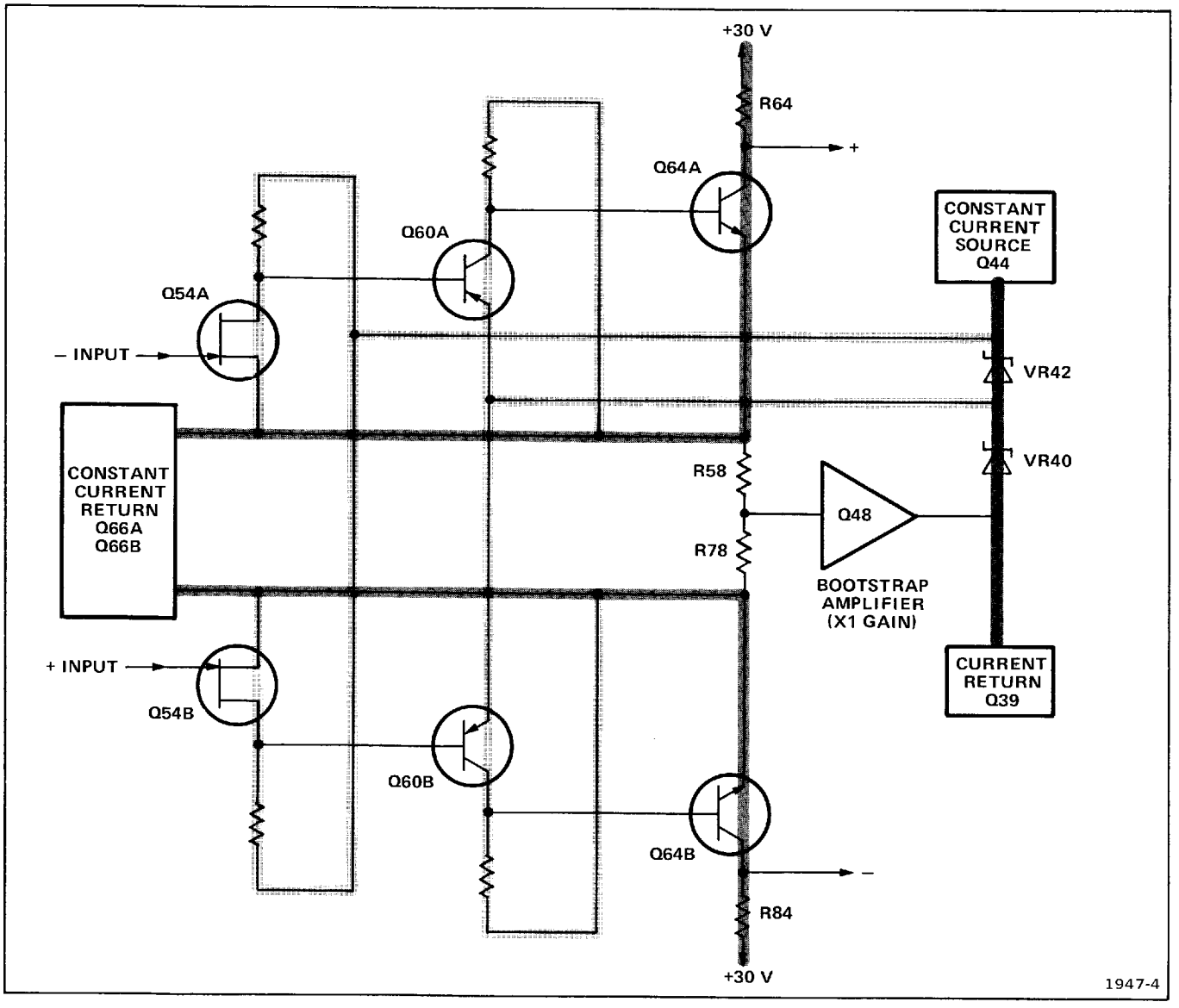

Fig. 2-1. Floating Power Supply detailed block diagram showing standing current paths through the Preamplifier.

While Q286 is off, Q386 is on and draws current from the +5 volt dc supply through R386. The resultant voltage across R386 turns off Q382 and Q392 in the Channel Switch stage. Thus, the channel 2 signal is not coupled to the mainframe.

When the CH 2 MODE button is pressed in, the bias level on Q286 is higher (less negative) than that at Q386, which turns Q286 on and Q386 off. The conditions described for the channel 1 mode are then reversed.

For dual-trace operation (both CH 1 and CH 2 MODE buttons pushed in), a 0 to +5 volts repetitive signal is applied from the mainframe to the base of Q386 through pin B21. Thus, the bias level on Q386 alternates above and below the bias level on Q286 which turns on channel 1, then channel 2, at a rate determined by the repetition rate of the channel switch signal at pin B21.

Trigger Amplifier

Differential amplifier Q245 and Q255 receives the triggering signal from the emitters of Q242 and Q252 in the isolation stage of the Output Amplifier. The triggering signal is amplified and passed through TRIGGER switch S401 to transistor Q404 where it is made available to an associated time-base unit via pin A4. The triggering signal is of the same polarity as that applied to the gate of Q54B and has an amplitude of about 0.25 volts per displayed division.

Vertical Switching

VOLTS/DIV switch S20 contains a series of cam lobes which engage and disengage various contacts at different positions of the switch. Cams 1, 2, 4, and 5 control switching of the Input Attenuator and cams 11 through 19 control switching of gain-setting network resistors R228 through R236 in the Gain-Switching Amplifier stage. Those contacts that are engaged at any VOLTS/DIV switch position are shown by black dots on the switch logic diagram.

READOUT ③

Deflection Factor (VOLTS/DIV Knob Skirt and CRT)

Either of two lamp bulbs (DS417 or DS421) located behind the VOLTS/DIV knob skirt illuminate the selected deflection factor to provide a direct readout. Normally, DS421 is lit to indicate a 1X deflection factor. Connecting a readout-coded 10X probe to either input (with the GND buttons out) automatically changes the crt readout by a factor of 10 and lights DS417 to indicate a 10X deflection factor.

With a 10X readout-coded probe connected to the – input, the probe-coding resistor is connected in parallel with R410 through the probe-coding ring. The probe resistor biases Q417 on, which turns on indicator DS417. Consequently, Q421 turns off and extinguishes indicator DS421. The probe-coding resistor in parallel with R410 also changes the bias on Q450 which changes the crt readout. When the DISPLAY button is out, illuminating voltage is removed from indicators DS417 and DS421, and Q484 is gated off. Thus, indicators DS417 and DS421 are extinguished, and the crt readout is blanked.

With a 10X readout-coded probe connected to the + input, R413 functions the same as R410 in the – input circuit. Thus, a 10X readout-coded probe connected to either or both inputs will provide a 10X readout on the VOLTS/DIV knob skirt and on the crt.

When pressed in, contacts of GND switches S2D (+ input) and S2B (– input) open the circuit between the + and – input probe-coding rings and the readout circuitry. Consequently, with a readout-coded probe connected to both inputs and both + and – GND buttons pressed in, the VOLTS/DIV knob skirt and crt will indicate a 1X deflection factor. If only one of the GND buttons is pressed in, the VOLTS/DIV knob skirt and crt will indicate a 10X deflection factor.

If the probe-coding ring on the + or – input connector is grounded, DS417 lights to indicate a 10X deflection factor and the crt readout is extinguished. The crt readout is determined by the VOLTS/DIV control which establishes the bias on Q458, Q466 and Q474. Changing the bias on the base of these transistors also changes the emitter voltage thereby changing the voltage across their associated emitter resistors. The current drawn from pin A28 through Q458, Q466, or Q474 and their associated emitter resistors determines the crt readout.

REPLACEABLE ELECTRICAL PARTS

PARTS ORDERING INFORMATION

Replacement parts are available from or through your local Tektronix, Inc. Field Office or representative.

Changes to Tektronix instruments are sometimes made to accommodate improved components as they become available, and to give you the benefit of the latest circuit improvements developed in our engineering department. It is therefore important, when ordering parts, to include the following information in your order: Part number, instrument type or number, serial number, and modification number if applicable.

If a part you have ordered has been replaced with a new or improved part, your local Tektronix, Inc. Field Office or representative will contact you concerning any change in part number.

Change information, if any, is located at the rear of this manual.

SPECIAL NOTES AND SYMBOLS

X000	Part first added at this serial number
00X	Part removed after this serial number

ITEM NAME

In the Parts List, an Item Name is separated from the description by a colon (:). Because of space limitations, an Item Name may sometimes appear as incomplete. For further Item Name identification, the U.S. Federal Cataloging Handbook H6-1 can be utilized where possible.

ABBREVIATIONS

ACTR	ACTUATOR	PLSTC	PLASTIC
ASSY	ASSEMBLY	QTZ	QUARTZ
CAP	CAPACITOR	RECP	RECEPTACLE
CER	CERAMIC	RES	RESISTOR
CKT	CIRCUIT	RF	RADIO FREQUENCY
COMP	COMPOSITION	SEL	SELECTED
CONN	CONNECTOR	SEMICOND	SEMICONDUCTOR
ELCTLT	ELECTROLYTIC	SENS	SENSITIVE
ELEC	ELECTRICAL	VAR	VARIABLE
INCAND	INCANDESCENT	WW	WIREWOUND
LED	LIGHT EMITTING DIODE	XFMR	TRANSFORMER
NONWIR	NON WIREWOUND	XTAL	CRYSTAL

CROSS INDEX MFR. CODE NUMBER TO MANUFACTURER

MFR.CODE	MANUFACTURER	ADDRESS	CITY,STATE,ZIP
00853	SANGAMO ELECTRIC CO., S. CAROLINA DIV.	P. O. BOX 128	PICKENS, SC 29671
01121	ALLEN-BRADLEY CO.	1201 2ND ST. SOUTH	MILWAUKEE, WI 53204
03508	GENERAL ELECTRIC CO., SEMI-CONDUCTOR PRODUCTS DEPT.	ELECTRONICS PARK	SYRACUSE, NY 13201
04713	MOTOROLA, INC., SEMICONDUCTOR PRODUCTS DIV.	5005 E. MCDOWELL RD.	PHOENIX, AZ 85036
07263	FAIRCHILD SEMICONDUCTOR, A DIV. OF FAIRCHILD CAMERA AND INSTRUMENT CORP.	464 ELLIS ST.	MOUNTAIN VIEW, CA 94042
07910	TELEDYNE SEMICONDUCTOR	12515 CHADRON AVE.	HAWTHORNE, CA 90250
08806	GENERAL ELECTRIC CO., MINIATURE LAMP PRODUCTS DEPT.	NELA PK.	CLEVELAND, OH 44112
12040	NATIONAL SEMICONDUCTOR CORP.	COMMERCE DRIVE	DANBURY, CT 06810
15818	TELEDYNE SEMICONDUCTOR	1300 TERRA BELLA AVE.	MOUNTAIN VIEW, CA 94040
19701	ELECTRA-MIDLAND CORP., ELECTRA DIV.	P. O. BOX 760	MINERAL WELLS, TX 76067
34553	AMPEREX ELECTRONIC CORP., COMPONENT DIV.	35 HOFFMAN AVE.	HAPPAUGE, NY 11787
56289	SPRAGUE ELECTRIC CO.		NORTH ADAMS, MA 01247
71400	BUSSMAN MFG., DIVISION OF MCGRAW-EDISON CO.	2536 W. UNIVERSITY ST.	ST. LOUIS, MO 63107
71590	CENTRALAB ELECTRONICS, DIV. OF GLOBE-UNION, INC.	5757 N. GREEN BAY AVE.	MILWAUKEE, WI 53201
72982	ERIE TECHNOLOGICAL PRODUCTS, INC.	644 W. 12TH ST.	ERIE, PA 16512
73138	BECKMAN INSTRUMENTS, INC., HELIPOT DIV.	2500 HARBOR BlVD.	FULLERTON, CA 92634
75042	TRW ELECTRONIC COMPONENTS, IRC FIXED RESISTORS, PHILADELPHIA DIVISION	401 N. BROAD ST.	PHILADELPHIA, PA 19108
80009	TEKTRONIX, INC.	P. O. BOX 500	BEAVERTON, OR 97077
80740	BECKMAN INSTRUMENTS, INC.	2500 HARBOR BlVD.	FULLERTON, CA 92634
81483	INTERNATIONAL RECTIFIER CORP.	9220 SUNSET BlVD.	LOS ANGELES, CA 90069
91637	DALE ELECTRONICS, INC.	P. O. BOX 609	COLUMBUS, NB 68601

Ckt No.	Tektronix Part No.	Serial/Model No. Eff	Dscont	Name & Description	Mfr Code	Mfr Part Number
A1	670-3150-00			CKT BOARD ASSY:PRE AMPLIFIER	80009	670-3150-00
A2	670-3150-00			CKT BOARD ASSY:PRE AMPLIFIER	80009	670-3150-00
A3	670-3143-00			CKT BOARD ASSY:MAIN	80009	670-3143-00
C2 [1,2]	295-0181-00			CAP.,SET,MATCHED:TO 1% 285-1025-00	80009	295-0181-00
C4	281-0182-00			CAP.,VAR,PLSTC:1.8-10PF,300V	34553	2222-809-05002
C5	281-0182-00			CAP.,VAR,PLSTC:1.8-10PF,300V	34553	2222-809-05002
C6	281-0184-00			CAP.,VAR,PLSTC:2-18PF,500VDC	34553	2222-809-05003
C7	281-0508-00			CAP.,FXD,CER DI:12PF,+/-0.6PF,500V	72982	301-000C0G0120J
C8	283-0626-00			CAP.,FXD,MICA D:1800PF,5%,500V	00853	D195E182J0
C12 [1,2]	295-0181-00			CAP.,SET,MATCHED:TO 1% 285-1025-00	80009	295-0181-00
C14	281-0182-00			CAP.,VAR,PLSTC:1.8-10PF,300V	34553	2222-809-05002
C15	281-0182-00			CAP.,VAR,PLSTC:1.8-10PF,300V	34553	2222-809-05002
C16	281-0184-00			CAP.,VAR,PLSTC:2-18PF,500VDC	34553	2222-809-05003
C17	281-0508-00			CAP.,FXD,CER DI:12PF,+/-0.6PF,500V	72982	301-000C0G0120J
C18	283-0626-00			CAP.,FXD,MICA D:1800PF,5%,500V	00853	D195E182J0
C23	290-0522-00			CAP.,FXD,ELCTLT:1UF,20%,50V	56289	196D105X0050HA1
C25	290-0522-00			CAP.,FXD,ELCTLT:1UF,20%,50V	56289	196D105X0050HA1
C40	290-0535-00			CAP.,FXD,ELCTLT:33UF,20%,10V	56289	196D336X0010KA1
C42	290-0535-00			CAP.,FXD,ELCTLT:33UF,20%,10V	56289	196D336X0010KA1
C43	281-0513-00			CAP.,FXD,CER DI:27PF,+/-5.4PF,500V	72982	301-000P2G0270M
C45	290-0522-00			CAP.,FXD,ELCTLT:1UF,20%,50V	56289	196D105X0050HA1
C54	281-0578-00			CAP.,FXD,CER DI:18PF,5%,500V	72982	301-000C0G0180J
C59	281-0178-00			CAP.,VAR,PLSTC:1-4PF,500V	34553	2222-809-05001
C60	281-0503-00			CAP.,FXD,CER DI:8PF,+/-0.5PF,500V	72982	301-000C0H0809D
C72	283-0003-00			CAP.,FXD,CER DI:0.01UF,+80-20%,150V	72982	855-547E103Z
C74	281-0578-00			CAP.,FXD,CER DI:18PF,5%,500V	72982	301-000C0G0180J
C79	281-0534-00			CAP.,FXD,CER DI:3.3PF,+/-0.25PF,500V	72982	301-000C0J0339C
C80	281-0503-00			CAP.,FXD,CER DI:8PF,+/-0.5PF,500V	72982	301-000C0H0809D
C94	283-0080-00			CAP.,FXD,CER DI:0.022UF,+80-20%,25V	56289	19C611
C96	281-0629-00			CAP.,FXD,CER DI:33PF,5%,600V	72982	308-000C0G0330G
C97	283-0003-00			CAP.,FXD,CER DI:0.01UF,+80-20%,150V	72982	855-547E103Z
C98	290-0522-00			CAP.,FXD,ELCTLT:1UF,20%,50V	56289	196D105X0050HA1
C99	290-0522-00			CAP.,FXD,ELCTLT:1UF,20%,50V	56289	196D105X0050HA1
C102 [3,2]	295-0181-00			CAP.,SET,MATCHED:TO 1% 285-1025-00	80009	295-0181-00
C104	281-0182-00			CAP.,VAR,PLSTC:1.8-10PF,300V	34553	2222-809-05002
C105	281-0182-00			CAP.,VAR,PLSTC:1.8-10PF,300V	34553	2222-809-05002
C106	281-0184-00			CAP.,VAR,PLSTC:2-18PF,500VDC	34553	2222-809-05003
C107	281-0508-00			CAP.,FXD,CER DI:12PF,+/-0.6PF,500V	72982	301-000C0G0120J
C108	283-0626-00			CAP.,FXD,MICA D:1800PF,5%,500V	00853	D195E182J0
C112 [3,2]	295-0181-00			CAP.,SET,MATCHED:TO 1% 285-1025-00	80009	295-0181-00
C114	281-0182-00			CAP.,VAR,PLSTC:1.8-10PF,300V	34553	2222-809-05002
C115	281-0182-00			CAP.,VAR,PLSTC:1.8-10PF,300V	34553	2222-809-05002
C116	281-0184-00			CAP.,VAR,PLSTC:2-18PF,500VDC	34553	2222-809-05003
C117	281-0508-00			CAP.,FXD,CER DI:12PF,+/-0.6PF,500V	72982	301-000C0G0120J
C118	283-0626-00			CAP.,FXD,MICA D:1800PF,5%,500V	00853	D195E182J0
C123	290-0522-00			CAP.,FXD,ELCTLT:1UF,20%,50V	56289	196D105X0050HA1
C125	290-0522-00			CAP.,FXD,ELCTLT:1UF,20%,50V	56289	196D105X0050HA1
C140	290-0535-00			CAP.,FXD,ELCTLT:33UF,20%,10V	56289	196D336X0010KA1
C142	290-0535-00			CAP.,FXD,ELCTLT:33UF,20%,10V	56289	196D336X0010KA1
C143	281-0513-00			CAP.,FXD,CER DI:27PF,+/-5.4PF,500V	72982	301-000P2G0270M
C145	290-0522-00			CAP.,FXD,ELCTLT:1UF,20%,50V	56289	196D105X0050HA1
C154	281-0578-00			CAP.,FXD,CER DI:18PF,5%,500V	72982	301-000C0G0180J
C159	281-0178-00			CAP.,VAR,PLSTC:1-4PF,500V	34553	2222-809-05001

[1] C2 and C12 furnished as a unit.

[2] Individual timing capacitors in this assembly must be ordered by the 9-digit part number, letter suffix and tolerance printed on the timing capacitor to be replaced. The letter suffix and the tolerance should be the same for all of the timing capacitors in the assembly.

EXAMPLE: 285-XXXX-XX F-

[3,2] C102 and C112 furnished as a unit.

Ckt No.	Tektronix Part No.	Serial/Model No. Eff	Dscont	Name & Description	Mfr Code	Mfr Part Number
C160	281-0503-00			CAP.,FXD,CER DI:8PF,+/-0.5PF,500V	72982	301-000C0H0809D
C172	283-0003-00			CAP.,FXD,CER DI:0.01UF,+80-20%,150V	72982	855-547E103Z
C174	281-0578-00			CAP.,FXD,CER DI:18PF,5%,500V	72982	301-000C0G0180J
C179	281-0534-00			CAP.,FXD,CER DI:3.3PF,+/-0.25PF,500V	72982	301-000C0J0339C
C180	281-0503-00			CAP.,FXD,CER DI:8PF,+/-0.5PF,500V	72982	301-000C0H0809D
C194	283-0080-00			CAP.,FXD,CER DI:0.022UF,+80-20%,25V	56289	19C611
C196	281-0629-00			CAP.,FXD,CER DI:33PF,5%,600V	72982	308-000C0G0330G
C197	283-0003-00			CAP.,FXD,CER DI:0.01UF,+80-20%,150V	72982	855-547E103Z
C198	290-0522-00			CAP.,FXD,ELCTLT:1UF,20%,50V	56289	196D105X0050HA1
C199	290-0522-00			CAP.,FXD,ELCTLT:1UF,20%,50V	56289	196D105X0050HA1
C202	281-0604-00			CAP.,FXD,CER DI:2.2PF,+/-0.25PF,500V	72982	301-000C0J0229C
C207	281-0503-00			CAP.,FXD,CER DI:8PF,+/-0.5PF,500V	72982	301-000C0H0809D
C212	281-0604-00			CAP.,FXD,CER DI:2.2PF,+/-0.25PF,500V	72982	301-000C0J0229C
C217	281-0503-00			CAP.,FXD,CER DI:8PF,+/-0.5PF,500V	72982	301-000C0H0809D
C239	283-0041-00			CAP.,FXD,CER DI:0.0033UF,5%,500V	72982	841-541B332J
C266	283-0003-00			CAP.,FXD,CER DI:0.01UF,+80-20%,150V	72982	855-547E103Z
C276	283-0003-00			CAP.,FXD,CER DI:0.01UF,+80-20%,150V	72982	855-547E103Z
C288	283-0000-00			CAP.,FXD,CER DI:0.001UF,+100-0%,500V	72982	831-516E102P
C302	281-0604-00			CAP.,FXD,CER DI:2.2PF,+/-0.25PF,500V	72982	301-000C0J0229C
C307	281-0503-00			CAP.,FXD,CER DI:8PF,+/-0.5PF,500V	72982	301-000C0H0809D
C312	281-0604-00			CAP.,FXD,CER DI:2.2PF,+/-0.25PF,500V	72982	301-000C0J0229C
C317	281-0503-00			CAP.,FXD,CER DI:8PF,+/-0.5PF,500V	72982	301-000C0H0809D
C339	283-0041-00			CAP.,FXD,CER DI:0.0033UF,5%,500V	72982	841-541B332J
C366	283-0003-00			CAP.,FXD,CER DI:0.01UF,+80-20%,150V	72982	855-547E103Z
C376	283-0003-00			CAP.,FXD,CER DI:0.01UF,+80-20%,150V	72982	855-547E103Z
C389	281-0578-00			CAP.,FXD,CER DI:18PF,5%,500V	72982	301-000C0G0180J
C401	283-0003-00			CAP.,FXD,CER DI:0.01UF,+80-20%,150V	72982	855-547E103Z
C407	290-0522-00			CAP.,FXD,ELCTLT:1UF,20%,50V	56289	196D105X0050HA1
C415	283-0081-00			CAP.,FXD,CER DI:0.1UF,+80-20%,25V	56289	36C600
C435	283-0081-00			CAP.,FXD,CER DI:0.1UF,+80-20%,25V	56289	36C600
C445	283-0002-00			CAP.,FXD,CER DI:0.01UF,+80-20%,500V	72982	811-546E103Z
C592	290-0522-00			CAP.,FXD,ELCTLT:1UF,20%,50V	56289	196D105X0035HA1
C594	290-0522-00			CAP.,FXD,ELCTLT:1UF,20%,50V	56289	196D105X0050HA1
CR21	152-0323-00			SEMICOND DEVICE:SILICON,35V,100MA	03508	SE365
CR24	152-0323-00			SEMICOND DEVICE:SILICON,35V,100MA	03508	SE365
CR31	152-0323-00			SEMICOND DEVICE:SILICON,35V,100MA	03508	SE365
CR34	152-0323-00			SEMICOND DEVICE:SILICON,35V,100MA	03508	SE365
CR121	152-0323-00			SEMICOND DEVICE:SILICON,35V,100MA	03508	SE365
CR124	152-0323-00			SEMICOND DEVICE:SILICON,35V,100MA	03508	SE365
CR131	152-0323-00			SEMICOND DEVICE:SILICON,35V,100MA	03508	SE365
CR134	152-0323-00			SEMICOND DEVICE:SILICON,35V,100MA	03508	SE365
CR224	152-0141-02			SEMICOND DEVICE:SILICON,30V,150MA	07910	1N4152
CR246	152-0141-02			SEMICOND DEVICE:SILICON,30V,150MA	07910	1N4152
CR280	152-0141-02			SEMICOND DEVICE:SILICON,30V,150MA	07910	1N4152
CR283	152-0141-02			SEMICOND DEVICE:SILICON,30V,150MA	07910	1N4152
CR286	152-0141-02			SEMICOND DEVICE:SILICON,30V,150MA	07910	1N4152
CR290	152-0141-02			SEMICOND DEVICE:SILICON,30V,150MA	07910	1N4152
CR293	152-0141-02			SEMICOND DEVICE:SILICON,30V,150MA	07910	1N4152
CR324	152-0141-02			SEMICOND DEVICE:SILICON,30V,150MA	07910	1N4152
CR346	152-0141-02			SEMICOND DEVICE:SILICON,30V,150MA	07910	1N4152
CR380	152-0141-02			SEMICOND DEVICE:SILICON,30V,150MA	07910	1N4152
CR383	152-0141-02			SEMICOND DEVICE:SILICON,30V,150MA	07910	1N4152
CR386	152-0141-02			SEMICOND DEVICE:SILICON,30V,150MA	07910	1N4152

Ckt No.	Tektronix Part No.	Serial/Model No. Eff	Dscont	Name & Description	Mfr Code	Mfr Part Number
CR390	152-0141-02			SEMICOND DEVICE:SILICON,30V,150MA	07910	1N4152
CR393	152-0141-02			SEMICOND DEVICE:SILICON,30V,150MA	07910	1N4152
CR411	152-0141-02			SEMICOND DEVICE:SILICON,30V,150MA	07910	1N4152
CR414	152-0141-02			SEMICOND DEVICE:SILICON,30V,150MA	07910	1N4152
CR431	152-0141-02			SEMICOND DEVICE:SILICON,30V,150MA	07910	1N4152
CR434	152-0141-02			SEMICOND DEVICE:SILICON,30V,150MA	07910	1N4152
CR478	152-0141-02			SEMICOND DEVICE:SILICON,30V,150MA	07910	1N4152
CR483	152-0141-02			SEMICOND DEVICE:SILICON,30V,150MA	07910	1N4152
CR528	152-0141-02			SEMICOND DEVICE:SILICON,30V,150MA	07910	1N4152
CR533	152-0141-02			SEMICOND DEVICE:SILICON,30V,150MA	07910	1N4152
DS417	150-0111-00			LAMP,GLOW:NEON,1.2MA	08806	2AC-AT
DS421	150-0111-00			LAMP,GLOW:NEON,1.2MA	08806	2AC-AT
DS437	150-0111-00			LAMP,GLOW:NEON,1.2MA	08806	2AC-AT
DS441	150-0111-00			LAMP,GLOW:NEON,1.2MA	08806	2AC-AT
F20	159-0024-00			FUSE,CARTRIDGE:3AG,0.06A,250V,FAST BLOW	71400	AGC1-16
F30	159-0024-00			FUSE,CARTRIDGE:3AG,0.06A,250V,FAST BLOW	71400	AGC1-16
F120	159-0024-00			FUSE,CARTRIDGE:3AG,0.06A,250V,FAST BLOW	71400	AGC1-16
F130	159-0024-00			FUSE,CARTRIDGE:3AG,0.06A,250V,FAST BLOW	71400	AGC1-16
J1	131-1171-00			CONNECTOR,RCPT,:BNC,50 OHM	80009	131-1171-00
J11	131-1171-00			CONNECTOR,RCPT,:BNC,50 OHM	80009	131-1171-00
J101	131-1171-00			CONNECTOR,RCPT,:BNC,50 OHM	80009	131-1171-00
J111	131-1171-00			CONNECTOR,RCPT,:BNC,50 OHM	80009	131-1171-00
L592	108-0245-00			COIL,RF:3.9UH	80009	108-0245-00
L594	108-0245-00			COIL,RF:3.9UH	80009	108-0245-00
Q39	151-0341-00			TRANSISTOR:SILICON,NPN	07263	2N3565
Q44	151-0342-00			TRANSISTOR:SILICON,PNP	07263	2N4249
Q48	151-0432-00			TRANSISTOR:SILICON,NPN	12040	SM07391
Q54A,B	151-1031-00			TRANSISTOR:SILICON,FE,N-CHANNEL,DUAL	80009	151-1031-00
Q60A,B	151-0261-00			TRANSISTOR:SILICON,PNP,DUAL	12040	NS7410
Q64A,B	151-0232-00			TRANSISTOR:SILICON,NPN,DUAL	12040	NS7348
Q66A,B	151-0232-00			TRANSISTOR:SILICON,NPN,DUAL	12040	NS7348
Q139	151-0341-00			TRANSISTOR:SILICON,NPN	07263	2N3565
Q144	151-0342-00			TRANSISTOR:SILICON,PNP	07263	2N4249
Q148	151-0432-00			TRANSISTOR:SILICON,NPN	12040	SM07391
Q154A,B	151-1031-00			TRANSISTOR:SILICON,FE,N-CHANNEL,DUAL	80009	151-1031-00
Q160A,B	151-0261-00			TRANSISTOR:SILICON,PNP,DUAL	12040	NS7410
Q164A,B	151-0232-00			TRANSISTOR:SILICON,NPN,DUAL	12040	NS7348
Q166A,B	151-0232-00			TRANSISTOR:SILICON,NPN,DUAL	12040	NS7348
Q205A,B	151-0353-00			TRANSISTOR:SILICON,NPN,DUAL MONOLITH	80009	151-0353-00
Q208A,B	151-0261-00			TRANSISTOR:SILICON,PNP,DUAL	12040	NS7410
Q210A,B	151-0232-00			TRANSISTOR:SILICON,NPN,DUAL	12040	NS7348
Q242	151-0341-00			TRANSISTOR:SILICON,NPN	07263	2N3565
Q245	151-0342-00			TRANSISTOR:SILICON,PNP	07263	2N4249
Q252	151-0341-00			TRANSISTOR:SILICON,NPN	07263	2N3565
Q255	151-0342-00			TRANSISTOR:SILICON,PNP	07263	2N4249
Q260	151-0342-00			TRANSISTOR:SILICON,PNP	07263	2N4249
Q267	151-0341-00			TRANSISTOR:SILICON,NPN	07263	2N3565
Q270	151-0342-00			TRANSISTOR:SILICON,PNP	07263	2N4249
Q277	151-0341-00			TRANSISTOR:SILICON,NPN	07263	2N3565
Q282	151-1005-00			TRANSISTOR:SILICON,JFE,N-CHANNEL	15818	U1490
Q286	151-0341-00			TRANSISTOR:SILICON,NPN	07263	2N3565
Q292	151-1005-00			TRANSISTOR:SILICON,JFE,N-CHANNEL	15818	U1490

Ckt No.	Tektronix Part No.	Serial/Model No. Eff	Dscont	Name & Description	Mfr Code	Mfr Part Number
Q305A,B	151-0353-00			TRANSISTOR:SILICON,NPN,DUAL MONOLITH	80009	151-0353-00
Q308A,B	151-0261-00			TRANSISTOR:SILICON,PNP,DUAL	12040	NS7410
Q310A,B	151-0232-00			TRANSISTOR:SILICON,NPN,DUAL	12040	NS7348
Q342	151-0341-00			TRANSISTOR:SILICON,NPN	07263	2N3565
Q345	151-0342-00			TRANSISTOR:SILICON,PNP	07263	2N4249
Q352	151-0341-00			TRANSISTOR:SILICON,NPN	07263	2N3565
Q355	151-0342-00			TRANSISTOR:SILICON,PNP	07263	2N4249
Q360	151-0342-00			TRANSISTOR:SILICON,PNP	07263	2N4249
Q367	151-0341-00			TRANSISTOR:SILICON,NPN	07263	2N3565
Q370	151-0342-00			TRANSISTOR:SILICON,PNP	07263	2N4249
Q377	151-0341-00			TRANSISTOR:SILICON,NPN	07263	2N3565
Q382	151-1005-00			TRANSISTOR:SILICON,JFE,N-CHANNEL	15818	U1490
Q386	151-0341-00			TRANSISTOR:SILICON,NPN	07263	2N3565
Q392	151-1005-00			TRANSISTOR:SILICON,JFE,N-CHANNEL	15818	U1490
Q404	151-0341-00			TRANSISTOR:SILICON,NPN	07263	2N3565
Q417	151-0347-00			TRANSISTOR:SILICON,NPN	80009	151-0347-00
Q421	151-0347-00			TRANSISTOR:SILICON,NPN	80009	151-0347-00
Q425	151-0342-00			TRANSISTOR:SILICON,PNP	07263	2N4249
Q437	151-0347-00			TRANSISTOR:SILICON,NPN	80009	151-0347-00
Q441	151-0347-00			TRANSISTOR:SILICON,NPN	80009	151-0347-00
Q450	151-0281-00			TRANSISTOR:SILICON,NPN	03508	X16P4039
Q458	151-0281-00			TRANSISTOR:SILICON,NPN	03508	X16P4039
Q466	151-0281-00			TRANSISTOR:SILICON,NPN	03508	X16P4039
Q474	151-0281-00			TRANSISTOR:SILICON,NPN	03508	X16P4039
Q484	151-1005-00			TRANSISTOR:SILICON,JFE,N-CHANNEL	15818	U1490
Q500	151-0281-00			TRANSISTOR:SILICON,NPN	03508	X16P4039
Q508	151-0281-00			TRANSISTOR:SILICON,NPN	03508	X16P4039
Q516	151-0281-00			TRANSISTOR:SILICON,NPN	03508	X16P4039
Q524	151-0281-00			TRANSISTOR:SILICON,NPN	03508	X16P4039
Q534	151-1005-00			TRANSISTOR:SILICON,JFE,N-CHANNEL	15818	U1490
R2	315-0105-00			RES.,FXD,CMPSN:1M OHM,5%,0.25W	01121	CB1055
R4	315-0270-00			RES.,FXD,CMPSN:27 OHM,5%,0.25W	01121	CB2705
R5	322-0624-07			RES.,FXD,FILM:990K OHM,0.1%,0.25W	75042	CEBT0-9903B
R8	321-0289-03			RES.,FXD,FILM:10K OHM,0.25%,0.125W	75042	CEAT2-1002C
R9	311-0605-00			RES.,VAR,NONWIR:200 OHM,10%,0.50W	80740	62-54-3
R12	315-0105-00			RES.,FXD,CMPSN:1M OHM,5%,0.25W	01121	CB1055
R14	315-0270-00			RES.,FXD,CMPSN:27 OHM,5%,0.25W	01121	CB2705
R15	322-0624-07			RES.,FXD,FILM:990K OHM,0.1%,0.25W	75042	CEBT0-9903B
R18	321-0289-03			RES.,FXD,FILM:10K OHM,0.25%,0.125W	75042	CEAT2-1002C
R20	322-0481-07			RES.,FXD,FILM:1M OHM,0.1%,0.25W	91637	MFF1421C100038
R23	315-0153-00			RES.,FXD,CMPSN:15K OHM,5%,0.25W	01121	CB1535
R25	315-0153-00			RES.,FXD,CMPSN:15K OHM,5%,0.25W	01121	CB1535
R30	322-0481-07			RES.,FXD,FILM:1M OHM,0.1%,0.25W	91637	MFF1421C100038
R36	315-0153-00			RES.,FXD,CMPSN:15K OHM,5%,0.25W	01121	CB1535
R37	315-0153-00			RES.,FXD,CMPSN:15K OHM,5%,0.25W	01121	CB1535
R39	315-0113-00			RES.,FXD,CMPSN:11K OHM,5%,0.25W	01121	CB1135
R43	315-0270-00			RES.,FXD,CMPSN:27 OHM,5%,0.25W	01121	CB2705
R45	315-0151-00			RES.,FXD,CMPSN:150 OHM,5%,0.25W	01121	CB1515
R47	315-0362-00			RES.,FXD,CMPSN:3.6K OHM,5%,0.25W	01121	CB3625
R49	315-0222-00			RES.,FXD,CMPSN:2.2K OHM,5%,0.25W	01121	CB2225
R51	315-0101-00			RES.,FXD,CMPSN:100 OHM,5%,0.25W	01121	CB1015
R53	321-0235-00			RES.,FXD,FILM:2.74K OHM,1%,0.125W	75042	CEAT0-2741F
R54	315-0512-00			RES.,FXD,CMPSN:5.1K OHM,5%,0.25W	01121	CB5125

Ckt No.	Tektronix Part No.	Serial/Model No. Eff	Dscont	Name & Description	Mfr Code	Mfr Part Number
R56	321-0126-00			RES.,FXD,FILM:200 OHM,1%,0.125W	75042	CEAT0-2000F
R58	321-0928-07			RES.,FXD,FILM:250 OHM,0.1%,0.125W	91637	MFF1816C250R08
R62	321-0207-00			RES.,FXD,FILM:1.4K OHM,1%,0.125W	75042	CEAT0-1401F
R64	321-0193-03			RES.,FXD,FILM:1K OHM,0.25%,0.125W	75042	CEAT2-1001C
R66	321-0135-00			RES.,FXD,FILM:249 OHM,1%,0.125W	75042	CEAT0-2490F
R68	321-0235-00			RES.,FXD,FILM:2.74K OHM,1%,0.125W	75042	CEAT0-2741F
R69	315-0121-00			RES.,FXD,CMPSN:120 OHM,5%,0.25W	01121	CB1215
R70	315-0331-00			RES.,FXD,CMPSN:330 OHM,5%,0.25W	01121	CB3315
R71	315-0101-00			RES.,FXD,CMPSN:100 OHM,5%,0.25W	01121	CB1015
R72	311-1064-00			RES.,VAR,NONWW:500 OHM,10%,0.5W	01121	WA1G032S501UA
R73	321-0235-00			RES.,FXD,FILM:2.74K OHM,1%,0.125W	75042	CEAT0-2741F
R74	315-0512-00			RES.,FXD,CMPSN:5.1K OHM,5%,0.25W	01121	CB5125
R76	321-0126-00			RES.,FXD,FILM:200 OHM,1%,0.125W	75042	CEAT0-2000F
R78	321-0928-07			RES.,FXD,FILM:250 OHM,0.1%,0.125W	91637	MFF1816C250R08
R82	321-0207-00			RES.,FXD,FILM:1.4K OHM,1%,0.125W	75042	CEAT0-1401F
R84	321-0193-03			RES.,FXD,FILM:1K OHM,0.25%,0.125W	75042	CEAT2-1001C
R86	321-0135-00			RES.,FXD,FILM:249 OHM,1%,0.125W	75042	CEAT0-2490F
R88	321-0235-00			RES.,FXD,FILM:2.74K OHM,1%,0.125W	75042	CEAT0-2741F
R89	311-0605-00			RES.,VAR,NONWIR:200 OHM,10%,0.50W	80740	62-54-3
R94	321-0638-00			RES.,FXD,FILM:7.96K OHM,1%,0.125W	91637	MFF1816G79600F
R95	321-0289-00			RES.,FXD,FILM:10K OHM,1%,0.125W	75042	CEAT0-1002F
R98	315-0100-00			RES.,FXD,CMPSN:10 OHM,5%,0.25W	01121	CB1005
R99	315-0100-00			RES.,FXD,CMPSN:10 OHM,5%,0.25W	01121	CB1005
R102	315-0105-00			RES.,FXD,CMPSN:1M OHM,5%,0.25W	01121	CB1055
R104	315-0270-00			RES.,FXD,CMPSN:27 OHM,5%,0.25W	01121	CB2705
R105	322-0624-07			RES.,FXD,FILM:990K OHM,0.1%,0.25W	75042	CEBT0-9903B
R108	321-0289-03			RES.,FXD,FILM:10K OHM,0.25%,0.125W	75042	CEAT2-1002C
R109	311-0605-00			RES.,VAR,NONWIR:200 OHM,10%,0.50W	80740	62-54-3
R112	315-0105-00			RES.,FXD,CMPSN:1M OHM,5%,0.25W	01121	CB1055
R114	315-0270-00			RES.,FXD,CMPSN:27 OHM,5%,0.25W	01121	CB2705
R115	322-0624-07			RES.,FXD,FILM:990K OHM,0.1%,0.25W	75042	CEBT0-9903B
R118	321-0289-03			RES.,FXD,FILM:10K OHM,0.25%,0.125W	75042	CEAT2-1002C
R120	322-0481-07			RES.,FXD,FILM:1M OHM,0.1%,0.25W	91637	MFF1421C100038
R123	315-0153-00			RES.,FXD,CMPSN:15K OHM,5%,0.25W	01121	CB1535
R125	315-0153-00			RES.,FXD,CMPSN:15K OHM,5%,0.25W	01121	CB1535
R130	322-0481-07			RES.,FXD,FILM:1M OHM,0.1%,0.25W	91637	MFF1421C100038
R136	315-0153-00			RES.,FXD,CMPSN:15K OHM,5%,0.25W	01121	CB1535
R137	315-0153-00			RES.,FXD,CMPSN:15K OHM,5%,0.25W	01121	CB1535
R139	315-0113-00			RES.,FXD,CMPSN:11K OHM,5%,0.25W	01121	CB1135
R143	315-0270-00			RES.,FXD,CMPSN:27 OHM,5%,0.25W	01121	CB2705
R145	315-0151-00			RES.,FXD,CMPSN:150 OHM,5%,0.25W	01121	CB1515
R147	315-0362-00			RES.,FXD,CMPSN:3.6K OHM,5%,0.25W	01121	CB3625
R149	315-0222-00			RES.,FXD,CMPSN:2.2K OHM,5%,0.25W	01121	CB2225
R151	315-0101-00			RES.,FXD,CMPSN:100 OHM,5%,0.25W	01121	CB1015
R153	321-0235-00			RES.,FXD,FILM:2.74K OHM,1%,0.125W	75042	CEAT0-2741F
R154	315-0512-00			RES.,FXD,CMPSN:5.1K OHM,5%,0.25W	01121	CB5125
R156	321-0126-00			RES.,FXD,FILM:200 OHM,1%,0.125W	75042	CEAT0-2000F
R158	321-0928-07			RES.,FXD,FILM:250 OHM,0.1%,0.125W	91637	MFF1816C250R08
R162	321-0207-00			RES.,FXD,FILM:1.4K OHM,1%,0.125W	75042	CEAT0-1401F
R164	321-0193-03			RES.,FXD,FILM:1K OHM,0.25%,0.125W	75042	CEAT2-1001C
R166	321-0135-00			RES.,FXD,FILM:249 OHM,1%,0.125W	75042	CEAT0-2490F
R168	321-0235-00			RES.,FXD,FILM:2.74K OHM,1%,0.125W	75042	CEAT0-2741F
R169	315-0121-00			RES.,FXD,CMPSN:120 OHM,5%,0.25W	01121	CB1215

Ckt No.	Tektronix Part No.	Serial/Model No. Eff	Dscont	Name & Description	Mfr Code	Mfr Part Number
R170	315-0331-00			RES.,FXD,CMPSN:330 OHM,5%,0.25W	01121	CB3315
R171	315-0101-00			RES.,FXD,CMPSN:100 OHM,5%,0.25W	01121	CB1015
R172	311-1064-00			RES.,VAR,NONWW:500 OHM,10%,0.5W	01121	WA1G032S501UA
R173	321-0235-00			RES.,FXD,FILM:2.74K OHM,1%,0.125W	75042	CEAT0-2741F
R174	315-0512-00			RES.,FXD,CMPSN:5.1K OHM,5%,0.25W	01121	CB5125
R176	321-0126-00			RES.,FXD,FILM:200 OHM,1%,0.125W	75042	CEAT0-2000F
R178	321-0928-07			RES.,FXD,FILM:250 OHM,0.1%,0.125W	91637	MFF1816C250R08
R182	321-0207-00			RES.,FXD,FILM:1.4K OHM,1%,0.125W	75042	CEAT0-1401F
R184	321-0193-03			RES.,FXD,FILM:1K OHM,0.25%,0.125W	75042	CEAT2-1001C
R186	321-0135-00			RES.,FXD,FILM:249 OHM,1%,0.125W	75042	CEAT0-2490F
R188	321-0235-00			RES.,FXD,FILM:2.74K OHM,1%,0.125W	75042	CEAT0-2741F
R189	311-0605-00			RES.,VAR,NONWIR:200 OHM,10%,0.50W	80740	62-54-3
R194	321-0638-00			RES.,FXD,FILM:7.96K OHM,1%,0.125W	91637	MFF1816G79600F
R195	321-0289-00			RES.,FXD,FILM:10K OHM,1%,0.125W	75042	CEAT0-1002F
R198	315-0100-00			RES.,FXD,CMPSN:10 OHM,5%,0.25W	01121	CB1005
R199	315-0100-00			RES.,FXD,CMPSN:10 OHM,5%,0.25W	01121	CB1005
R201	315-0101-00			RES.,FXD,CMPSN:100 OHM,5%,0.25W	01121	CB1015
R203	321-0816-03			RES.,FXD,FILM:5K OHM,0.25%,0.125W	75042	CEAT2-5KC
R204	321-0193-03			RES.,FXD,FILM:1K OHM,0.25%,0.125W	75042	CEAT2-1001C
R205	321-0256-00			RES.,FXD,FILM:4.53K OHM,1%,0.125W	75042	CEAT0-4531F
R208	321-0278-00			RES.,FXD,FILM:7.68K OHM,1%,0.125W	75042	CEAT0-7681F
R210	321-0231-00			RES.,FXD,FILM:2.49K OHM,1%,0.125W	75042	CEAT0-2491F
R211	315-0101-00			RES.,FXD,CMPSN:100 OHM,5%,0.25W	01121	CB1015
R213	321-0816-03			RES.,FXD,FILM:5K OHM,0.25%,0.125W	75042	CEAT2-5KC
R214	321-0193-03			RES.,FXD,FILM:1K OHM,0.25%,0.125W	75042	CEAT2-1001C
R215	321-0256-00			RES.,FXD,FILM:4.53K OHM,1%,0.125W	75042	CEAT0-4531F
R218	321-0278-00			RES.,FXD,FILM:7.68K OHM,1%,0.125W	75042	CEAT0-7681F
R220	321-0231-00			RES.,FXD,FILM:2.49K OHM,1%,0.125W	75042	CEAT0-2491F
R225	311-1567-00			RES.,VAR,NONWIR:100 OHM,20%,0.50W	73138	91A-100R0M
R228	321-0933-03			RES.,FXD,FILM:6.66K OHM,0.25%,0.125W	91637	MFF1616D66600C
R229	321-0932-03			RES.,FXD,FILM:2.50K OHM,0.25%,0.125W	91637	MFF1816D25000C
R230	321-0931-03			RES.,FXD,FILM:1.11K OHM,0.25%,0.125W	91637	MFF1816D11100C
R231	321-0660-03			RES.,FXD,FILM:417 OHM,0.25%,0.125W	91637	MFF1816D417R0C
R232	321-0930-03			RES.,FXD,FILM:204 OHM,0.25%,0.125W	91637	MFF1816D204R0C
R233	321-1097-03			RES.,FXD,FILM:101 OHM,0.25%,0.125W	91637	MFF1816D101R0C
R234	321-0030-03			RES.,FXD,FILM:20.0 OHM,0.25%,0.125W	19701	MF5CC20R00C
R236	321-0030-03			RES.,FXD,FILM:20.0 OHM,0.25%,0.125W	19701	MF5CC20R00C
R243	315-0203-00			RES.,FXD,CMPSN:20K OHM,5%,0.25W	01121	CB2035
R244	315-0331-00			RES.,FXD,CMPSN:330 OHM,5%,0.25W	01121	CB3315
R246	315-0203-00			RES.,FXD,CMPSN:20K OHM,5%,0.25W	01121	CB2035
R247	321-0222-00			RES.,FXD,FILM:2K OHM,1%,0.125W	75042	CEAT0-2001F
R248	315-0331-00			RES.,FXD,CMPSN:330 OHM,5%,0.25W	01121	CB3315
R253	315-0203-00			RES.,FXD,CMPSN:20K OHM,5%,0.25W	01121	CB2035.
R254	315-0331-00			RES.,FXD,CMPSN:330 OHM,5%,0.25W	01121	CB3315
R258	315-0331-00			RES.,FXD,CMPSN:330 OHM,5%,0.25W	01121	CB3315
R259	321-0228-00			RES.,FXD,FILM:2.32K OHM,1%,0.125W	75042	CEAT0-2321F
R262	321-0286-00			RES.,FXD,FILM:9.31K OHM,1%,0.125W	75042	CEAT0-9311F
R263	321-0215-00			RES.,FXD,FILM:1.69K OHM,1%,0.125W	75042	CEAT0-1691F
R264[1]	311-1403-00			RES.,VAR,NONWIR:5K OHM,20%,0.50W	01121	10M422
R265	321-0260-00			RES.,FXD,FILM:4.99K OHM,1%,0.125W	75042	CEAT0-4991F
R266	321-0193-00			RES.,FXD,FILM:1K OHM,1%,0.125W	75042	CEAT0-1001F
R268	321-0324-00			RES.,FXD,FILM:23.2K OHM,1%,0.125W	75042	CEAT0-2322F
R272	321-0286-00			RES.,FXD,FILM:9.31K OHM,1%,0.125W	75042	CEAT0-9311F

[1]Furnished as a unit with S478.

Ckt No.	Tektronix Part No.	Serial/Model No. Eff	Dscont	Name & Description	Mfr Code	Mfr Part Number
R273	311-1565-00			RES.,VAR,NONWIR:250 OHM,20%,0.50W	73138	91A250R0M
R274	311-0546-00			RES.,VAR,NONWIR:10K OHM,20%,0.75W	01121	W-8154
R275	321-0323-00			RES.,FXD,FILM:22.6K OHM,1%,0.125W	75042	CEAT0-2262F
R276	321-0193-00			RES.,FXD,FILM:1K OHM,1%,0.125W	75042	CEAT0-1001F
R278	321-0324-00			RES.,FXD,FILM:23.2K OHM,1%,0.125W	75042	CEAT0-2322F
R279	315-0122-00			RES.,FXD,CMPSN:1.2K OHM,5%,0.25W	01121	CB1225
R280	315-0470-00			RES.,FXD,CMPSN:47 OHM,5%,0.25W	01121	CB4705
R282	321-0247-00			RES.,FXD,FILM:3.65K OHM,1%,0.125W	75042	CEAT0-3651F
R284	321-0159-00			RES.,FXD,FILM:442 OHM,1%,0.125W	75042	CEAT0-4420F
R286	315-0153-00			RES.,FXD,CMPSN:15K OHM,5%,0.25W	01121	CB1535
R287	321-0356-00			RES.,FXD,FILM:49.9K OHM,1%,0.125W	75042	CEAT0-4992F
R288	321-0356-00			RES.,FXD,FILM:49.9K OHM,1%,0.125W	75042	CEAT0-4992F
R289	315-0154-00			RES.,FXD,CMPSN:150K OHM,5%,0.25W	01121	CB1545
R290	315-0470-00			RES.,FXD,CMPSN:47 OHM,5%,0.25W	01121	CB4705
R292	321-0247-00			RES.,FXD,FILM:3.65K OHM,1%,0.125W	75042	CEAT0-3651F
R294	321-0159-00			RES.,FXD,FILM:442 OHM,1%,0.125W	75042	CEAT0-4420F
R298	315-0222-00			RES.,FXD,CMPSN:2.2K OHM,5%,0.25W	01121	CB2225
R301	315-0101-00			RES.,FXD,CMPSN:100 OHM,5%,0.25W	01121	CB1015
R303	321-0816-03			RES.,FXD,FILM:5K OHM,0.25%,0.125W	75042	CEAT2-5KC
R304	321-0193-03			RES.,FXD,FILM:1K OHM,0.25%,0.125W	75042	CEAT2-1001C
R305	321-0256-00			RES.,FXD,FILM:4.53K OHM,1%,0.125W	75042	CEAT0-4531F
R308	321-0278-00			RES.,FXD,FILM:7.68K OHM,1%,0.125W	75042	CEAT0-7681F
R310	321-0231-00			RES.,FXD,FILM:2.49K OHM,1%,0.125W	75042	CEAT0-2491F
R311	315-0101-00			RES.,FXD,CMPSN:100 OHM,5%,0.25W	01121	CB1015
R313	321-0816-03			RES.,FXD,FILM:5K OHM,0.25%,0.125W	75042	CEAT2-5KC
R314	321-0193-03			RES.,FXD,FILM:1K OHM,0.25%,0.125W	75042	CEAT2-1001C
R315	321-0256-00			RES.,FXD,FILM:4.53K OHM,1%,0.125W	75042	CEAT0-4531F
R318	321-0278-00			RES.,FXD,FILM:7.68K OHM,1%,0.125W	75042	CEAT0-7681F
R320	321-0231-00			RES.,FXD,FILM:2.49K OHM,1%,0.125W	75042	CEAT0-2491F
R325	311-1567-00			RES.,VAR,NONWIR:100 OHM,20%,0.50W	73138	91A-100R0M
R328	321-0933-03			RES.,FXD,FILM:6.66K OHM,0.25%,0.125W	91637	MFF1616D66600C
R329	321-0932-03			RES.,FXD,FILM:2.50K OHM,0.25%,0.125W	91637	MFF1816D25000C
R330	321-0931-03			RES.,FXD,FILM:1.11K OHM,0.25%,0.125W	91637	MFF1816D11100C
R331	321-0660-03			RES.,FXD,FILM:417 OHM,0.25%,0.125W	91637	MFF1816D417R0C
R332	321-0930-03			RES.,FXD,FILM:204 OHM,0.25%,0.125W	91637	MFF1816D24R0C
R333	321-1097-03			RES.,FXD,FILM:101 OHM,0.25%,0.125W	91637	MFF1816D101R0C
R334	321-0030-03			RES.,FXD,FILM:20.0 OHM,0.25%,0.125W	19701	MF5CC20R00C
R336	321-0030-03			RES.,FXD,FILM:20.0 OHM,0.25%,0.125W	19701	MF5CC20R00C
R343	315-0203-00			RES.,FXD,CMPSN:20K OHM,5%,0.25W	01121	CB2035
R344	315-0331-00			RES.,FXD,CMPSN:330 OHM,5%,0.25W	01121	CB3315
R346	315-0203-00			RES.,FXD,CMPSN:20K OHM,5%,0.25W	01121	CB2035
R347	321-0222-00			RES.,FXD,FILM:2K OHM,1%,0.125W	75042	CEAT0-2001F
R348	315-0331-00			RES.,FXD,CMPSN:330 OHM,5%,0.25W	01121	CB3315
R353	315-0203-00			RES.,FXD,CMPSN:20K OHM,5%,0.25W	01121	CB2035
R354	315-0331-00			RES.,FXD,CMPSN:330 OHM,5%,0.25W	01121	CB3315
R358	315-0331-00			RES.,FXD,CMPSN:330 OHM,5%,0.25W	01121	CB3315
R359	321-0228-00			RES.,FXD,FILM:2.32K OHM,1%,0.125W	75042	CEAT0-2321F
R362	321-0286-00			RES.,FXD,FILM:9.31K OHM,1%,0.125W	75042	CEAT0-9311F
R363	321-0215-00			RES.,FXD,FILM:1.69K OHM,1%,0.125W	75042	CEAT0-1691F
R364[1]	311-1403-00			RES.,VAR,NONWIR:5K OHM,20%,0.50W	01121	10M422
R365	321-0260-00			RES.,FXD,FILM:4.99K OHM,1%,0.125W	75042	CEAT0-4991F
R366	321-0193-00			RES.,FXD,FILM:1K OHM,1%,0.125W	75042	CEAT0-1001F
R368	321-0324-00			RES.,FXD,FILM:23.2K OHM,1%,0.125W	75042	CEAT0-2322F

[1]Furnished as a unit with S528.

Ckt No.	Tektronix Part No.	Serial/Model No. Eff	Dscont	Name & Description	Mfr Code	Mfr Part Number
R372	321-0286-00			RES.,FXD,FILM:9.31K OHM,1%,0.125W	75042	CEAT0-9311F
R373	311-1565-00			RES.,VAR,NONWIR:250 OHM,20%,0.50W	73138	91A250R0M
R374	311-0546-00			RES.,VAR,NONWIR:10K OHM,20%,0.75W	01121	W-8154
R375	321-0323-00			RES.,FXD,FILM:22.6K OHM,1%,0.125W	75042	CEAT0-2262F
R376	321-0193-00			RES.,FXD,FILM:1K OHM,1%,0.125W	75042	CEAT0-1001F
R378	321-0324-00			RES.,FXD,FILM:23.2K OHM,1%,0.125W	75042	CEAT0-2322F
R379	315-0122-00			RES.,FXD,CMPSN:1.2K OHM,5%,0.25W	01121	CB1225
R380	315-0470-00			RES.,FXD,CMPSN:47 OHM,5%,0.25W	01121	CB4705
R382	321-0247-00			RES.,FXD,FILM:3.65K OHM,1%,0.125W	75042	CEAT0-3651F
R384	321-0159-00			RES.,FXD,FILM:442 OHM,1%,0.125W	75042	CEAT0-4420F
R386	315-0153-00			RES.,FXD,CMPSN:15K OHM,5%,0.25W	01121	CB1535
R387	321-0356-00			RES.,FXD,FILM:49.9K OHM,1%,0.125W	75042	CEAT0-4992F
R389	321-0362-00			RES.,FXD,FILM:57.6K OHM,1%,0.125W	75042	CEAT0-5762F
R390	315-0470-00			RES.,FXD,CMPSN:47 OHM,5%,0.25W	01121	CB4705
R392	321-0247-00			RES.,FXD,FILM:3.65K OHM,1%,0.125W	75042	CEAT0-3651F
R394	321-0159-00			RES.,FXD,FILM:442 OHM,1%,0.125W	75042	CEAT0-4420F
R402	315-0104-00			RES.,FXD,CMPSN:100K OHM,5%,0.25W	01121	CB1045
R403	315-0101-00			RES.,FXD,CMPSN:100 OHM,5%,0.25W	01121	CB1015
R405	315-0103-00			RES.,FXD,CMPSN:10K OHM,5%,0.25W	01121	CB1035
R406	315-0181-00			RES.,FXD,CMPSN:180 OHM,5%,0.25W	01121	CB1815
R407	315-0101-00			RES.,FXD,CMPSN:100 OHM,5%,0.25W	01121	CB1015
R410	321-0264-00			RES.,FXD,FILM:5.49K OHM,1%,0.125W	75042	CEAT0-5491F
R411	322-0264-00			RES.,FXD,FILM:5.49K OHM,1%,0.25W	75042	CEBT0-5491F
R413	321-0264-00			RES.,FXD,FILM:5.49K OHM,1%,0.125W	75042	CEAT0-5491F
R414	322-0264-00			RES.,FXD,FILM:5.49K OHM,1%,0.25W	75042	CEBT0-5491F
R416	315-0473-00			RES.,FXD,CMPSN:47K OHM,5%,0.25W	01121	CB4735
R418	315-0105-00			RES.,FXD,CMPSN:1M OHM,5%,0.25W	01121	CB1055
R419	315-0105-00			RES.,FXD,CMPSN:1M OHM,5%,0.25W	01121	CB1055
R423	301-0124-00			RES.,FXD,CMPSN:120K OHM,5%,0.50W	01121	EB1245
R426	321-0293-00			RES.,FXD,FILM:11K OHM,1%,0.125W	75042	CEAT0-1102F
R427	321-0289-00			RES.,FXD,FILM:10K OHM,1%,0.125W	75042	CEAT0-1002F
R430	321-0264-00			RES.,FXD,FILM:5.49K OHM,1%,0.125W	75042	CEAT0-5491F
R431	322-0264-00			RES.,FXD,FILM:5.49K OHM,1%,0.25W	75042	CEBT0-5491F
R433	321-0264-00			RES.,FXD,FILM:5.49K OHM,1%,0.125W	75042	CEAT0-5491F
R434	322-0264-00			RES.,FXD,FILM:5.49K OHM,1%,0.25W	75042	CEBT0-5491F
R436	315-0473-00			RES.,FXD,CMPSN:47K OHM,5%,0.25W	01121	CB4735
R438	315-0105-00			RES.,FXD,CMPSN:1M OHM,5%,0.25W	01121	CB1055
R439	315-0105-00			RES.,FXD,CMPSN:1M OHM,5%,0.25W	01121	CB1055
R443	301-0124-00			RES.,FXD,CMPSN:120K OHM,5%,0.50W	01121	EB1245
R445	301-0103-00			RES.,FXD,CMPSN:10K OHM,5%,0.50W	01121	EB1035
R451	321-0299-00			RES.,FXD,FILM:12.7K OHM,1%,0.125W	75042	CEAT0-1272F
R454	321-0398-00			RES.,FXD,FILM:137K OHM,1%,0.125W	75042	CEAT0-1373F
R455	321-0374-00			RES.,FXD,FILM:76.8K OHM,1%,0.125W	75042	CEAT0-7682F
R456	321-0385-00			RES.,FXD,FILM:100K OHM,1%,0.125W	75042	CEAT0-1003F
R457	321-0379-00			RES.,FXD,FILM:86.6K OHM,1%,0.125W	75042	CEAT0-8662F
R459	315-0203-00			RES.,FXD,CMPSN:20K OHM,5%,0.25W	01121	CB2035
R460	315-0753-00			RES.,FXD,CMPSN:75K OHM,5%,0.25W	01121	CB7535
R462	321-0281-00			RES.,FXD,FILM:8.25K OHM,1%,0.125W	75042	CEAT0-8251F
R463	321-0397-00			RES.,FXD,FILM:133K OHM,1%,0.125W	75042	CEAT0-1333F
R464	321-0356-00			RES.,FXD,FILM:49.9K OHM,1%,0.125W	75042	CEAT0-4992F
R465	321-0385-00			RES.,FXD,FILM:100K OHM,1%,0.125W	75042	CEAT0-1003F
R467	315-0203-00			RES.,FXD,CMPSN:20K OHM,5%,0.25W	01121	CB2035
R470	321-0374-00			RES.,FXD,FILM:76.8K OHM,1%,0.125W	75042	CEAT0-7682F

Ckt No.	Tektronix Part No.	Serial/Model No. Eff	Dscont	Name & Description	Mfr Code	Mfr Part Number
R471	321-0398-00			RES.,FXD,FILM:137K OHM,1%,0.125W	75042	CEAT0-1373F
R472	321-0385-00			RES.,FXD,FILM:100K OHM,1%,0.125W	75042	CEAT0-1003F
R473	321-0379-00			RES.,FXD,FILM:86.6K OHM,1%,0.125W	75042	CEAT0-8662F
R475	315-0203-00			RES.,FXD,CMPSN:20K OHM,5%,0.25W	01121	CB2035
R476	315-0513-00			RES.,FXD,CMPSN:51K OHM,5%,0.25W	01121	CB5135
R478	315-0123-00			RES.,FXD,CMPSN:12K OHM,5%,0.25W	01121	CB1235
R479	315-0154-00			RES.,FXD,CMPSN:150K OHM,5%,0.25W	01121	CB1545
R481	315-0753-00			RES.,FXD,CMPSN:75K OHM,5%,0.25W	01121	CB7535
R482	321-0344-00			RES.,FXD,FILM:37.4K OHM,1%,0.125W	75042	CEAT0-3742F
R484	315-0103-00			RES.,FXD,CMPSN:10K OHM,5%,0.25W	01121	CB1035
R485	315-0103-00			RES.,FXD,CMPSN:10K OHM,5%,0.25W	01121	CB1035
R501	321-0299-00			RES.,FXD,FILM:12.7K OHM,1%,0.125W	75042	CEAT0-1272F
R504	321-0398-00			RES.,FXD,FILM:137K OHM,1%,0.125W	75042	CEAT0-1373F
R505	321-0374-00			RES.,FXD,FILM:76.8K OHM,1%,0.125W	75042	CEAT0-7682F
R506	321-0385-00			RES.,FXD,FILM:100K OHM,1%,0.125W	75042	CEAT0-1003F
R507	321-0379-00			RES.,FXD,FILM:86.6K OHM,1%,0.125W	75042	CEAT0-8662F
R509	315-0203-00			RES.,FXD,CMPSN:20K OHM,5%,0.25W	01121	CB2035
R510	315-0753-00			RES.,FXD,CMPSN:75K OHM,5%,0.25W	01121	CB7535
R512	321-0281-00			RES.,FXD,FILM:8.25K OHM,1%,0.125W	75042	CEAT0-8251F
R513	321-0397-00			RES.,FXD,FILM:133K OHM,1%,0.125W	75042	CEAT0-1333F
R514	321-0356-00			RES.,FXD,FILM:49.9K OHM,1%,0.125W	75042	CEAT0-4992F
R515	321-0385-00			RES.,FXD,FILM:100K OHM,1%,0.125W	75042	CEAT0-1003F
R517	315-0203-00			RES.,FXD,CMPSN:20K OHM,5%,0.25W	01121	CB2035
R520	321-0374-00			RES.,FXD,FILM:76.8K OHM,1%,0.125W	75042	CEAT0-7682F
R521	321-0398-00			RES.,FXD,FILM:137K OHM,1%,0.125W	75042	CEAT0-1373F
R522	321-0385-00			RES.,FXD,FILM:100K OHM,1%,0.125W	75042	CEAT0-1003F
R523	321-0379-00			RES.,FXD,FILM:86.6K OHM,1%,0.125W	75042	CEAT0-8662F
R525	315-0203-00			RES.,FXD,CMPSN:20K OHM,5%,0.25W	01121	CB2035
R526	315-0513-00			RES.,FXD,CMPSN:51K OHM,5%,0.25W	01121	CB5135
R528	315-0123-00			RES.,FXD,CMPSN:12K OHM,5%,0.25W	01121	CB1235
R529	315-0154-00			RES.,FXD,CMPSN:150K OHM,5%,0.25W	01121	CB1545
R531	315-0753-00			RES.,FXD,CMPSN:75K OHM,5%,0.25W	01121	CB7535
R532	321-0344-00			RES.,FXD,FILM:37.4K OHM,1%,0.125W	75042	CEAT0-3742F
S2	260-1774-00			SWITCH,PUSH:4 BUTTON,DPDT	80009	260-1774-00
S20	263-1131-00			ACTR ASSY,CAM S:VOLTS/DIVISION	80009	263-1131-00
S102	260-1774-00			SWITCH,PUSH:4 BUTTON,DPDT	80009	260-1774-00
S120	263-1131-00			ACTR ASSY,CAM S:VOLTS/DIVISION	80009	263-1131-00
S239	260-1445-00			SWITCH,PUSH:1 STA,NON-SHORT	80009	260-1445-00
S289	260-1773-00			SWITCH,PUSH:2 BUTTON DPDT	80009	260-1773-00
S339	260-1445-00			SWITCH,PUSH:1 STA,NON-SHORT	80009	260-1445-00
S401	260-1211-00			SWITCH,PUSH:DPDT,PUSH-PUSH	71590	2KAB010000-357
S445	260-1209-00			SWITCH,PUSH:4PDT	71590	2KAB001000-358
S478[1]	311-1403-00			RES.,VAR,NONWIR:5K OHM,20%,0.50W	01121	10M422
S528[2]	311-1403-00			RES.,VAR,NONWIR:5K OHM,20%,0.50W	01121	10M422
VR23	152-0168-00			SEMICOND DEVICE:ZENER,0.4W,12V,5%	04713	1N963B
VR25	152-0168-00			SEMICOND DEVICE:ZENER,0.4W,12V,5%	04713	1N963B
VR40	152-0227-00			SEMICOND DEVICE:ZENER,0.4W,6.2V,5%	81483	69-6585
VR42	152-0227-00			SEMICOND DEVICE:ZENER,0.4W,6.2V,5%	81483	69-6585
VR97	152-0168-00			SEMICOND DEVICE:ZENER,0.4W,12V,5%	04713	1N963B
VR123	152-0168-00			SEMICOND DEVICE:ZENER,0.4W,12V,5%	04713	1N963B
VR125	152-0168-00			SEMICOND DEVICE:ZENER,0.4W,12V,5%	04713	1N963B
VR140	152-0227-00			SEMICOND DEVICE:ZENER,0.4W,6.2V,5%	81483	69-6585

[1]Furnished as a unit with R264.
[2]Furnished as a unit with R328.

Ckt No.	Tektronix Part No.	Serial/Model No. Eff	Dscont	Name & Description	Mfr Code	Mfr Part Number
VR142	152-0227-00			SEMICOND DEVICE:ZENER,0.4W,6.2V,5%	81483	69-6585
VR197	152-0168-00			SEMICOND DEVICE:ZENER,0.4W,12V,5%	04713	1N963B
VR222	153-0030-00			SEMICOND DEVICE SE:MTCHD WITHIN 0.1V AT 400MW	80009	153-0030-00
VR224	152-0227-00			SEMICOND DEVICE:ZENER,0.4W,6.2V,5%	81483	69-6585
VR296	152-0149-00			SEMICOND DEVICE:ZENER,0.4W,10V,5%	04713	1N961B
VR322	153-0030-00			SEMICOND DEVICE SE:MTCHD WITHIN 0.1V AT 400MW	80009	153-0030-00
VR324	152-0227-00			SEMICOND DEVICE:ZENER,0.4W,6.2V,5%	81483	69-6585

SERVICE INFORMATION

SERVICES AVAILABLE

Tektronix, Inc. provides complete instrument repair and adjustment at local Field Service Centers and at the Factory Service Center. Contact your local Tektronix Field Office or Representative for further information.

MAINTENANCE

General system maintenance procedures are provided in the 5000-series Oscilloscope instruction manual.

Circuit Board Removal

PREAMPLIFIER BOARDS. The Channel 1 and Channel 2 Preamplifier boards are identical. Therefore, the following procedure applies to either board.

1. Remove left and right side covers from 5A26.

2. Remove one attaching screw at rear and four in center of board.

3. Unsolder ground wire between Input Coupling switches and shield.

4. Remove multi-pin connector near outside front edge of Main board (right side of 5A26).

5. Gently pull out leads from rear of + and – input connectors (right side of 5A26).

6. Slide Preamplifier board back from front panel to free Input Coupling buttons.

7. Loosen set screws that attach POS control shaft to flexible coupler and remove shaft.

NOTE

Preamplifier board will lift away with ribbon cable attached to gain access to the botton of the Main board or back of Preamplifier board. To completely remove Preamplifier board, unsolder ribbon cable.

MAIN BOARD. Remove Main board as follows:

1. Remove both Preamplifier boards as described in preceding procedure.

2. Loosen set screws that attach VOLTS/DIV knobs to shaft and remove knobs.

3. Remove remaining two mounting screws located on each side and toward front of Main board.

4. Unsolder leads between input connector probe-coding rings and Main board.

5. Slide VOLTS/DIV X1 and X10 indicator lights away from front panel.

6. Gently slide Main board back to free buttons and STEP ATTEN BAL control shafts from front panel.

ADJUSTMENTS AFTER REPAIR

If any electrical components are replaced, the adjustments for the affected channel should be checked. Refer to the Adjustment Procedure in this section.

DIAGRAMS

Symbols and Reference Designators

Electrical components shown on the diagrams are in the following units unless noted otherwise:

Capacitors =	Values one or greater are in picofarads (pF).
	Values less than one are in microfarads (μF).
Resistors =	Ohms (Ω).

Symbols used on the diagrams are based on ANSI Standard Y32.2-1970.

Logic symbology is based on ANSI Y32.14-1973 in terms of positive logic. Logic symbols depict the logic function performed and may differ from the manufacturer's data.

The following prefix letters are used as reference designators to identify components or assemblies on the diagrams.

A	Assembly, separable or repairable (circuit board, etc.)
AT	Attenuator, fixed or variable
B	Motor
BT	Battery
C	Capacitor, fixed or variable
CB	Circuit breaker
CR	Diode, signal or rectifier
DL	Delay line
DS	Indicating device (lamp)
E	Spark Gap
F	Fuse
FL	Filter
H	Heat dissipating device (heat sink, heat radiator, etc.)
HR	Heater
HY	Hybrid circuit
J	Connector, stationary portion
K	Relay
L	Inductor, fixed or variable
LR	Inductor/resistor combination
M	Meter
P	Connector, movable portion
Q	Transistor or silicon-controlled rectifier
R	Resistor, fixed or variable
RT	Thermistor
S	Switch
T	Transformer
TC	Thermocouple
TP	Test point
U	Assembly, inseparable or non-repairable (integrated circuit, etc.)
V	Electron tube
VR	Voltage regulator (zener diode, etc.)
Y	Crystal
Z	Phase shifter

The following special symbols are used on the diagrams:

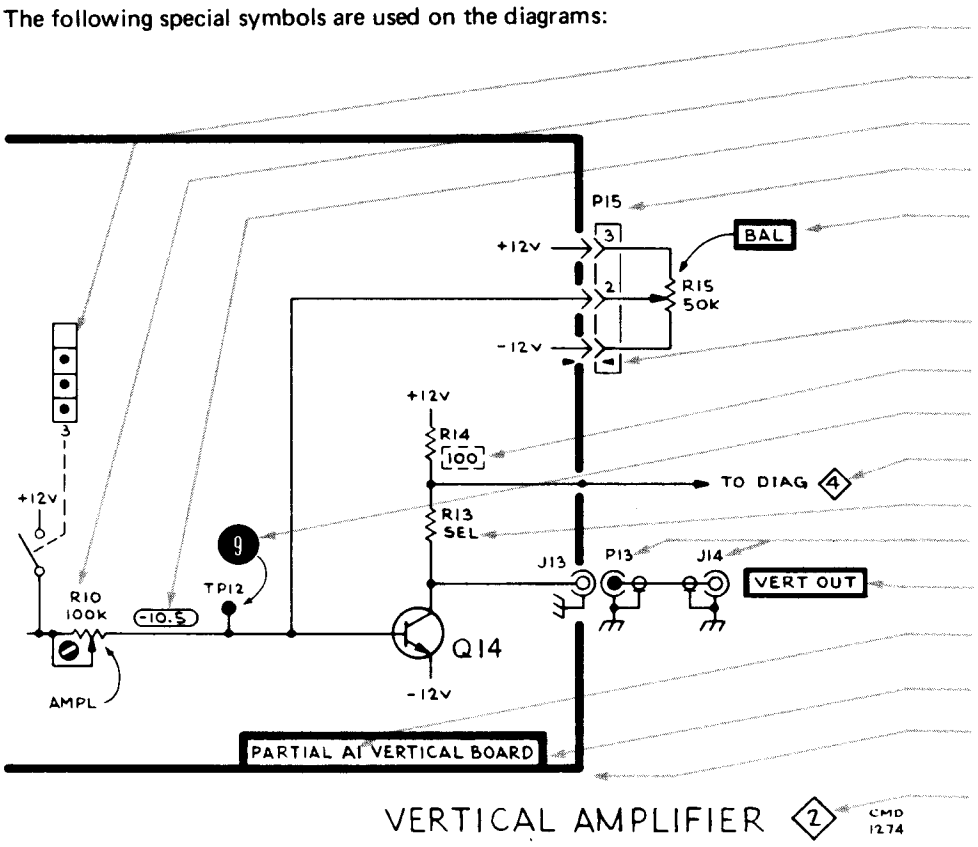

Cam Switch Closure Chart

Internal Screwdriver Adjustment

Test Voltage

Plug to E.C. Board

Panel Adjustment

Plug Index

Modified Component—See Parts List

Refer to Waveform

Refer to Diagram Number

SEL Value Selected at Factory

Coaxial Connector

Panel Connector

Assembly Number

Board Name

Etched Circuit Board Outlined in Black

Schematic Name and Number

@

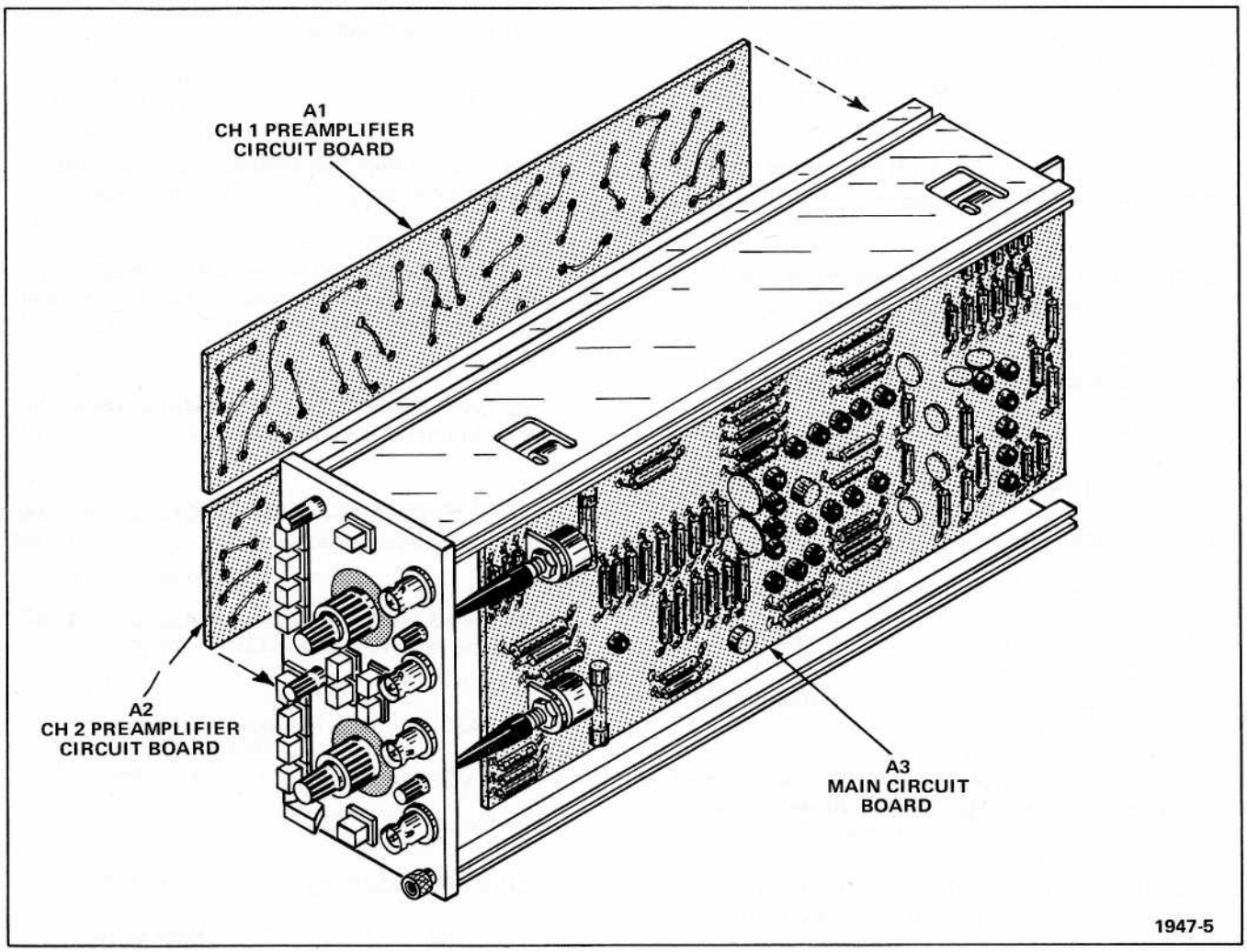

Fig. 4-1. Circuit board locations.

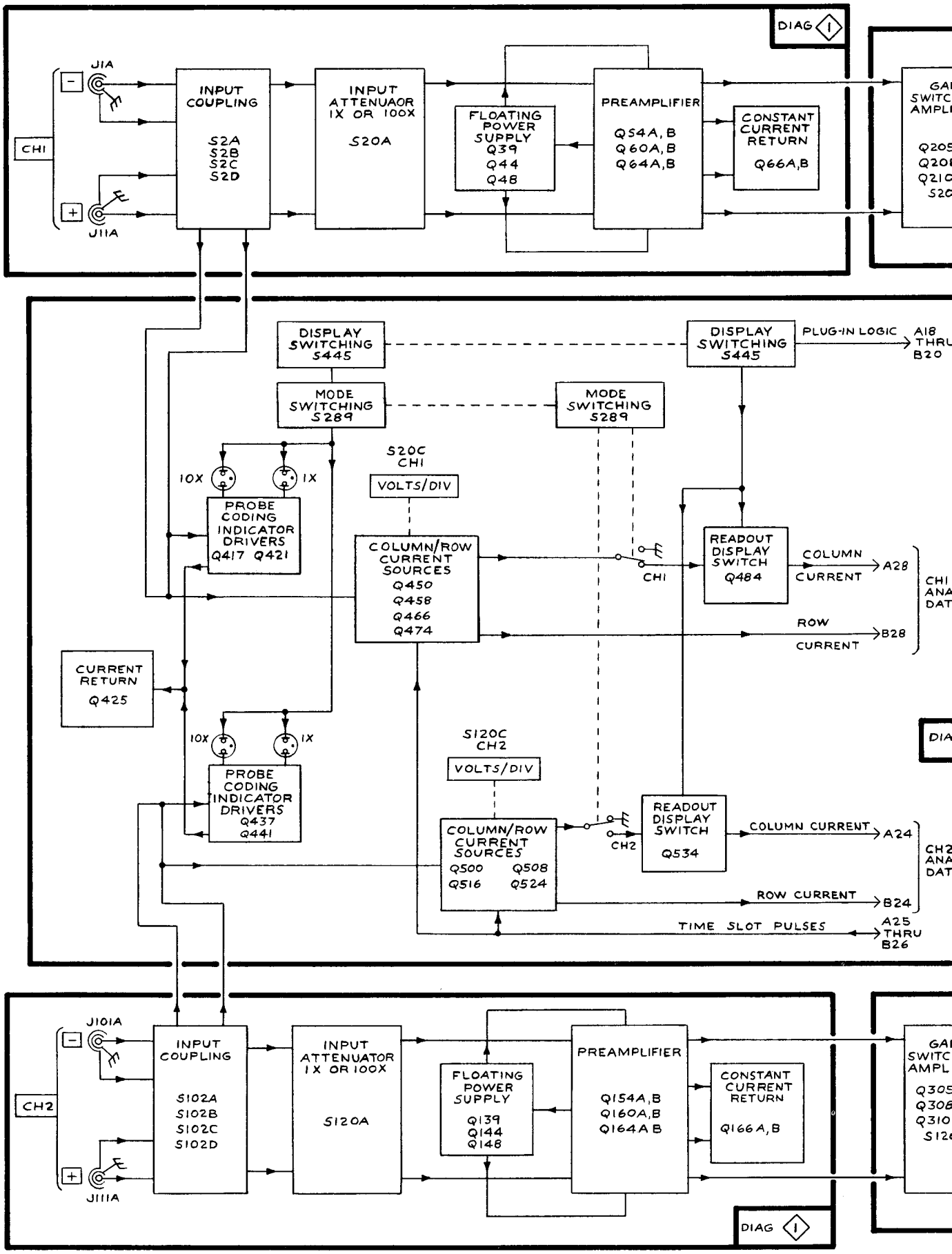
DIAG 1
J1A
CH1
J11A
INPUT COUPLING
S2A
S2B
S2C
S2D
INPUT ATTENUAOR 1X OR 100X
S20A
FLOATING POWER SUPPLY
Q39
Q44
Q48
PREAMPLIFIER
Q54A, B
Q60A, B
Q64A, B
CONSTANT CURRENT RETURN
Q66A, B
DISPLAY SWITCHING S445
DISPLAY SWITCHING S445
PLUG-IN LOGIC
A18 THRU B20
MODE SWITCHING S289
MODE SWITCHING S289
S20C CH1
VOLTS/DIV
10X
1X
PROBE CODING INDICATOR DRIVERS
Q417 Q421
COLUMN/ROW CURRENT SOURCES
Q450
Q458
Q466
Q474
CH1
READOUT DISPLAY SWITCH
Q484
COLUMN CURRENT
A28
ROW CURRENT
B28
CURRENT RETURN
Q425
10X
1X
S120C CH2
VOLTS/DIV
PROBE CODING INDICATOR DRIVERS
Q437
Q441
COLUMN/ROW CURRENT SOURCES
Q500
Q508
Q516
Q524
CH2
READOUT DISPLAY SWITCH
Q534
COLUMN CURRENT
A24
ROW CURRENT
B24
TIME SLOT PULSES
A25 THRU B26
J101A
CH2
J111A
INPUT COUPLING
S102A
S102B
S102C
S102D
INPUT ATTENUATOR 1X OR 100X
S120A
FLOATING POWER SUPPLY
Q139
Q144
Q148
PREAMPLIFIER
Q154A, B
Q160A, B
Q164A B
CONSTANT CURRENT RETURN
Q166A, B
DIAG 1

@

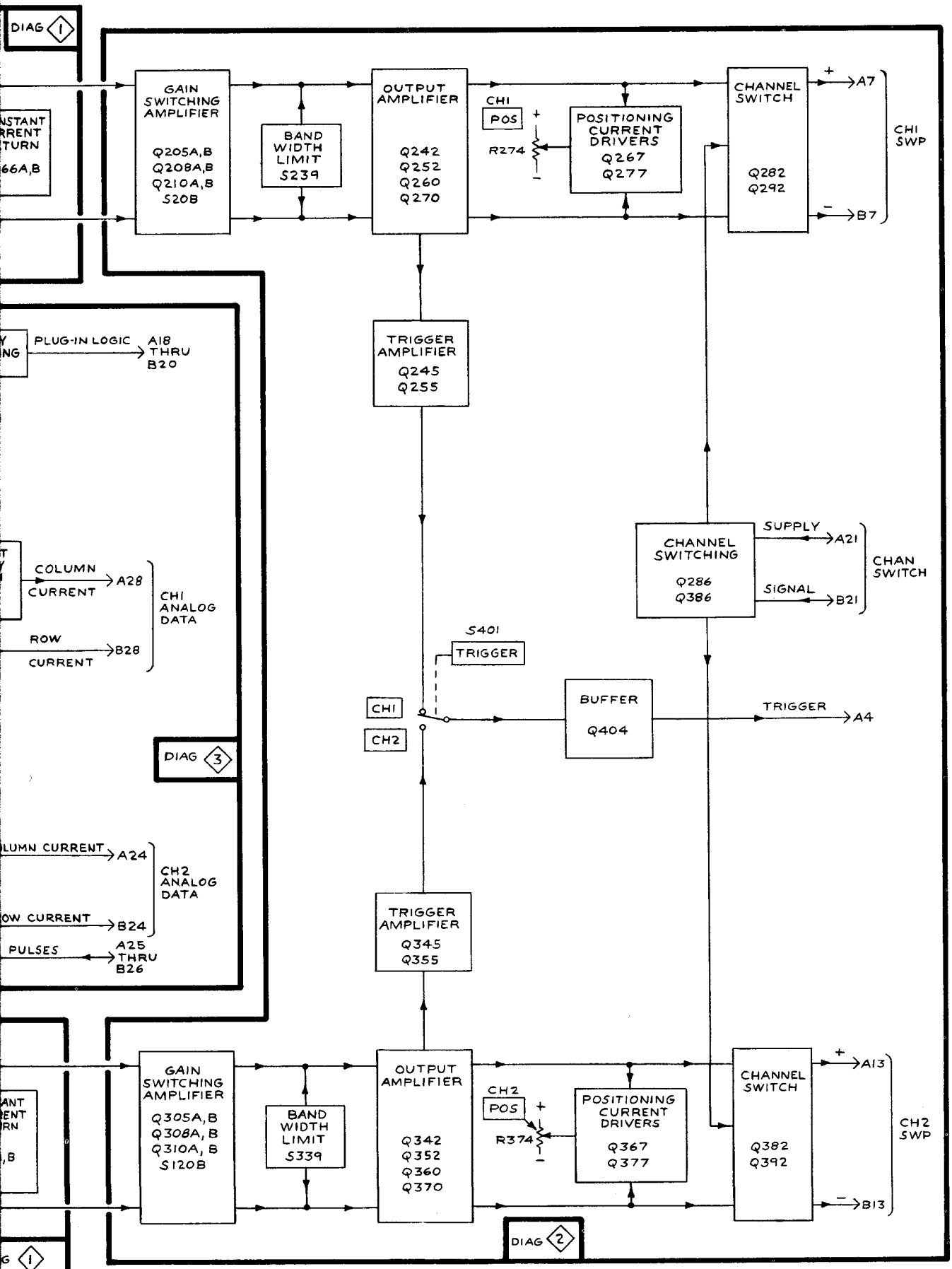

BLOCK DIAGRAM

ADJUSTMENT PROCEDURE

TEST EQUIPMENT

The following test equipment and accessories, or their equivalents, are required for complete calibration of the 5A26. Specifications given for the test equipment are the minimum necessary for accurate calibration. Therefore, some of the specifications listed here may be somewhat less rigorous than the actual performance capabilities of the test equipment. All test equipment is assumed to be correctly calibrated and operating within the listed specifications.

The Adjustment Procedure is based on this recommended equipment. If other equipment is substituted, control settings or calibration setup may need to be altered to meet the requirements of the equipment used. Detailed operating instructions for the test equipment are not given in this procedure. Refer to the instruction manual for the test equipment if more information is needed.

1. Oscilloscope—Tektronix 5403/D40.

2. Time base plug-in unit—Tektronix 5B10N Time Base/Amplifier.

3. Low-frequency sine-wave generator—Tektronix FG503 Function Generator (operates in a Tektronix TM500-Series power module).

4. Standard amplitude calibrator—Tektronix PG506 (operates in a Tektronix TM500-Series power module) or Tektronix part 067-0502-01.

5. 47 pF normalizer—Tektronix part 067-0541-00.

6. Plug-in extension cable for 5400-Series Oscilloscopes—Tektronix part 067-0645-00.

7. Dual input connector—Tektronix part 067-0525-00.

8. 50 Ω BNC coaxial cable—Tektronix part 012-0057-01.

PROCEDURE

Preparation

The 5A26 should be adjusted at an ambient temperature between +20°C and +30°C (+68°F and +86°F) for best accuracy. Install the 5A26 in the oscilloscope with the plug-in extension cable (067-0645-00). Remove the plug-in side covers. Allow at least 15 minutes for warmup. Refer to Fig. 4-1, Circuit Board Locations and Fig. 4-3, Adjustment Locations.

Control Settings

5A26 (both channels)

POS	Midrange
VOLTS/DIV	50 m
CAL (Variable VOLTS/DIV)	Fully clockwise (detent)
STEP ATTEN BAL	Midrange
DISPLAY	ON (button in)
MODE	CH 1 and CH 2 (buttons in)
BW LIMIT	OUT: 1 MHz (button out)
TRIGGER	OUT: CH 1 (button out)
+ Input Coupling	
AC	OUT: DC (button out)
GND	GND (button in)
− Input Coupling	
AC	OUT: DC (button out)
GND	GND (button in)

Time Base

Time/Div (Calibrated)	0.2 millisecond
Position	Midrange
Display	Alternate
Triggering Mode	Auto, triggered, ac coupling, + slope
Triggering Source	Left
Triggering Level	Midrange

1. ADJUST VARIABLE BALANCE

a. Position CH 1 trace 2 divisions above graticule center and CH 2 trace 2 divisions below graticule center.

b. Adjust Var Bal 1, R225, for no trace shift as CH 1 CAL (Variable VOLTS/DIV) control is rotated throughout its range.

c. Repeat part (b) for Var Bal 2, R325, and CH 2 CAL (Variable VOLTS/DIV) control.

d. Return CH 1 and CH 2 CAL (Variable VOLTS/DIV) controls to fully clockwise (calibrated) position.

2. ADJUST ATTENUATOR BALANCE RANGE

a. Adjust CH 1 Atten Bal Range, R89, for no trace shift as CH 1 VOLTS/DIV switch is positioned from 50 m through 50 μ. (If necessary, slight adjustment of front-panel STEP ATTEN BAL control is permissable.)

b. Repeat part (a) for CH 2 Atten Bal Range, R189, and CH 2 VOLTS/DIV switch.

3. ADJUST LOW-FREQUENCY COMMON-MODE REJECTION

a. Set 5A26 controls as follows:

CH 1 and CH 2 VOLTS/DIV	.1
MODE	CH 1 (button in)
CH 1 and CH 2 + Input Coupling	
AC	OUT: DC (button out)
GND	GND (button in)
CH 1 and CH 2 – Input Coupling	
AC	OUT: DC (button out)
GND	GND (button in)

b. Set standard amplitude calibrator for 50 volt output.

c. Connect standard amplitude calibrator to CH 1 + and – inputs through 50 Ω cable and dual input connector.

d. Adjust time-base trigger level for a stable display.

e. Adjust CH 1 LF CMR, R9, for correct display shown in Fig. 4-2.

f. Remove dual input connector and reconnect to CH 2 + and – inputs. Push in CH 2 MODE and TRIGGER buttons.

g. Adjust CH 2 LF CMR, R109, for correct display shown in Fig. 4-2.

h. Remove dual input connector.

4. ADJUST INPUT COMPENSATION

a. Set 5A26 controls as follows:

CH 1 and CH 2 VOLTS/DIV	.1
CH 2 + Input Coupling	
GND	Off (button out)
CH 2 – Input Coupling	
GND	GND (button in)
TRIGGER	CH 2 (button in)

b. Connect 47 pF normalizer directly to CH 2 + input and attach standard amplitude calibrator through 50 Ω cable to 47 pF normalizer.

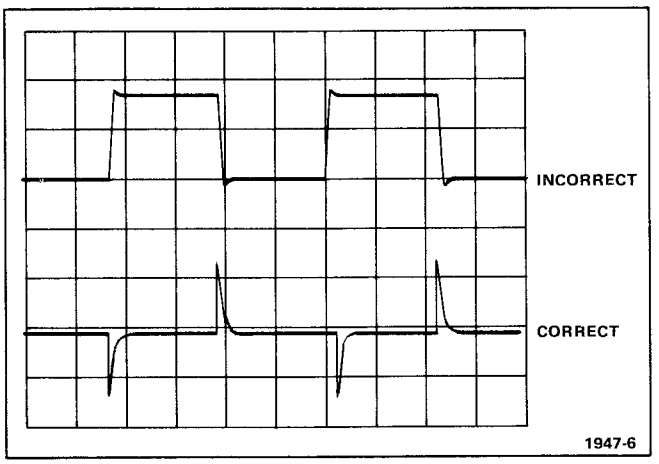

Fig. 4-2. Common-mode rejection (cmr) display.

c. Set standard amplitude calibrator for 1 volt output and adjust time-base trigger level for stable display.

d. Adjust Input Comp, C114 and C115 (1 and 2), for square front corner on top of displayed square wave.

e. Set CH 2 VOLTS/DIV switch to 50 m and standard amplitude calibrator for a 0.5 volt output.

f. Adjust Input Comp, C116, (3) for a square front corner on top of displayed square wave.

g. Disconnect standard amplitude calibrator and 47 pF normalizer and reconnect to CH 2 – input.

h. Set 5A26 controls as follows:

CH 2 VOLTS/DIV	.1
CH 2 + Input Coupling	
GND	GND (button in)
CH 2 – Input Coupling	
GND	Off (button out)

i. Set standard amplitude calibrator for 1 volt output and adjust time-base trigger level for stable display.

j. Adjust Input Comp, C104 and C105 (4 and 5), for square front corner on bottom of displayed square wave.

k. Set CH 2 VOLTS/DIV to 50 m and standard amplitude calibrator for 0.5 volt output.

l. Adjust Input Comp, C106 (6), for square front corner on bottom of displayed square wave.

m. Disconnect standard amplitude calibrator and 47 pF normalizer and reconnect to CH 1 + input.

n. Set 5A26 controls as follows:

CH 1 VOLTS/DIV	.1
MODE	CH 1 (button in)
TRIGGER	OUT: CH 1 (button out)
CH 1 + Input Coupling	
GND	Off (button out)
CH 1 – Input Coupling	
GND	GND (button in)

o. Set standard amplitude calibrator for 1 volt output and adjust time-base trigger level for stable display.

p. Adjust Input Comp, C14 and C15 (1 and 2), for a square front corner on the top of the displayed square wave.

q. Set CH 1 VOLTS/DIV to 50 m and standard amplitude calibrator for 0.5 volt output.

r. Adjust Input Comp, C16 (3), for square front corner on top of displayed square wave.

s. Disconnect standard amplitude calibrator and 47 pF normalizer and reconnect to CH 1 – input.

t. Set 5A26 controls as follows:

CH 1 VOLTS/DIV	.1
CH 1 + Input Coupling	
GND	GND (button in)
CH 1 – Input Coupling	
GND	Off (button out)

u. Set standard amplitude calibrator for 1 volt output and adjust time-base trigger level for stable display.

v. Adjust Input Comp, C4 and C5 (4 and 5), for square front corner on bottom of displayed square wave.

w. Set CH 1 VOLTS/DIV to 50 m and standard amplitude calibrator for 0.5 volt output.

x. Adjust Input Comp, C6 (6), for square front corner on bottom of displayed square wave.

y. Disconnect standard amplitude calibrator and 47 pF normalizer.

5. ADJUST AMPLIFIER GAIN

a. Set 5A26 controls as follows:

CH 1 VOLTS/DIV	50 m
MODE	CH 1 (button in)
CH 1 + Input Coupling	
AC	OUT: DC (button out)
GND	Off (button out)
CH 1 – Input Coupling	
AC	OUT: DC (button out)
GND	GND (button in)

b. Connect standard amplitude calibrator through 50 Ω cable to CH 1 + input and set for 0.2 volt output.

c. Adjust Gain 1, R273, for 4 division display.

d. Rotate CH 1 CAL (Variable VOLTS/DIV) fully counterclockwise and check that display amplitude is 1.5 divisions or less.

e. Set CH 1 CAL (Variable VOLTS/DIV) fully clockwise to calibrated (detent) position.

f. Disconnect standard amplitude calibrator and reconnect to CH 2 + input.

g. Set 5A26 controls as follows:

CH 2 VOLTS/DIV	50 m
MODE	CH 2 (button in)
TRIGGER	CH 2 (button in)
CH 2 + Input Coupling	
GND	Off (button out)
CH 2 – Input Coupling	
GND	GND (button in)

h. Adjust time-base trigger level for stable display.

i. Adjust Gain 2, R373, for 4 division display.

j. Set CH 2 CAL (Variable VOLTS/DIV) fully clockwise to calibrated (detent) position.

6. ADJUST HIGH-FREQUENCY COMMON-MODE REJECTION

a. Set 5A26 controls as follows:

CH 1 and CH 2 VOLTS/DIV	50 μ
MODE	CH 1 and CH 2 (buttons in)
CH 1 and CH 2 + and – Input Coupling	
AC	OUT: DC (button out)
GND	GND (button in)

b. Set generator for 20 volt, 30 kHz output and sweep rate for 20 μs/division.

c. Connect low-frequency sine-wave generator through 50 Ω cable and dual input connector to CH 1 + and – inputs.

d. Adjust CH 1 HF CMR, C59, for minimum display amplitude.

e. Set CH 1 VOLTS/DIV to .1.

f. Adjust Input Comp, C5 (5), for minimum display amplitude.

g. Disconnect dual input connector and reconnect to CH 2 + and – inputs.

h. Set 5A26 controls as follows:

CH 1 + and – Input Coupling	
GND	GND (button in)
CH 2 + and – Input Coupling	
GND	Off (button out)
TRIGGER	CH 2 (button in)

i. Adjust CH 2 HF CMR, C159, for minimum display amplitude.

j. Set CH 2 VOLTS/DIV to .1.

k. Adjust Input Comp, C105 (5), for minimum display amplitude.

l. Disconnect dual input connector.

isplay

display

A1 – CH 1 PREAMPLIFIER CIRCUIT BOARD

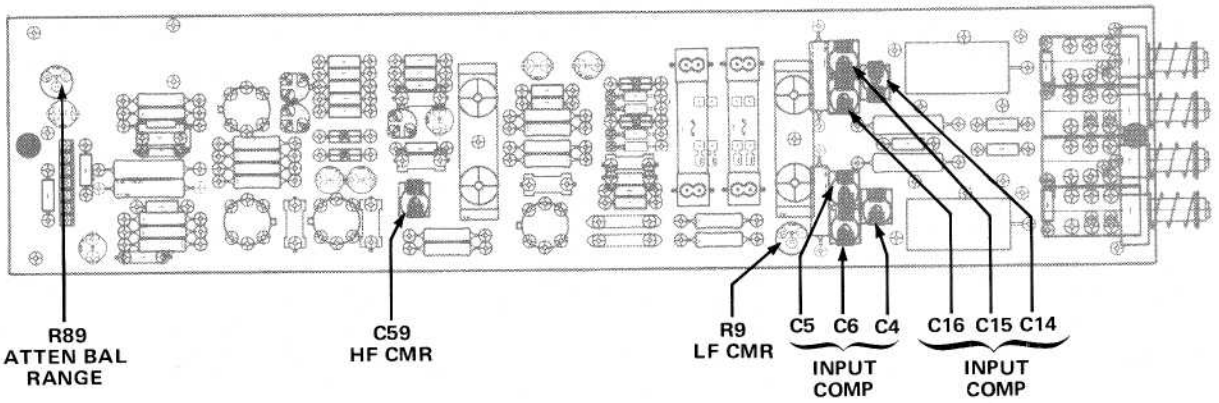

A2 – CH 2 PREAMPLIFIER CIRCUIT BOARD

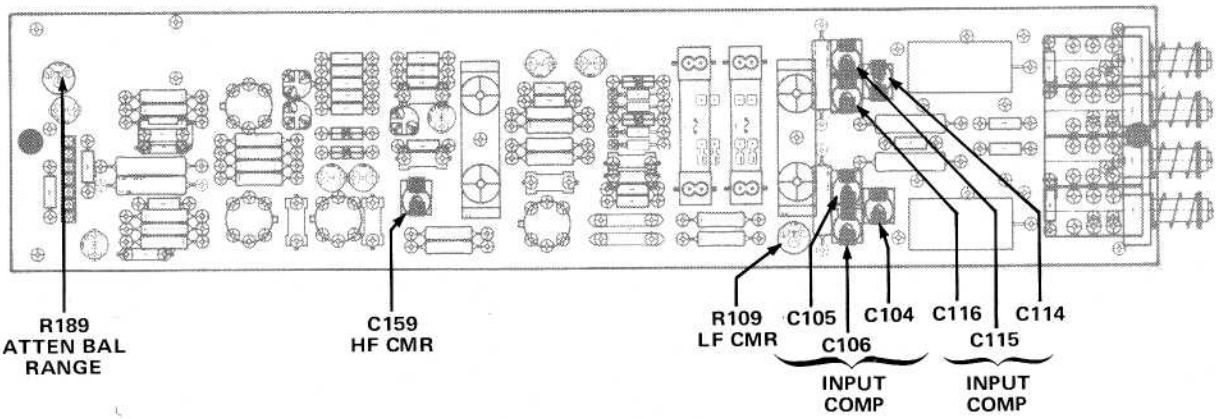

A3 – MAIN CIRCUIT BOARD

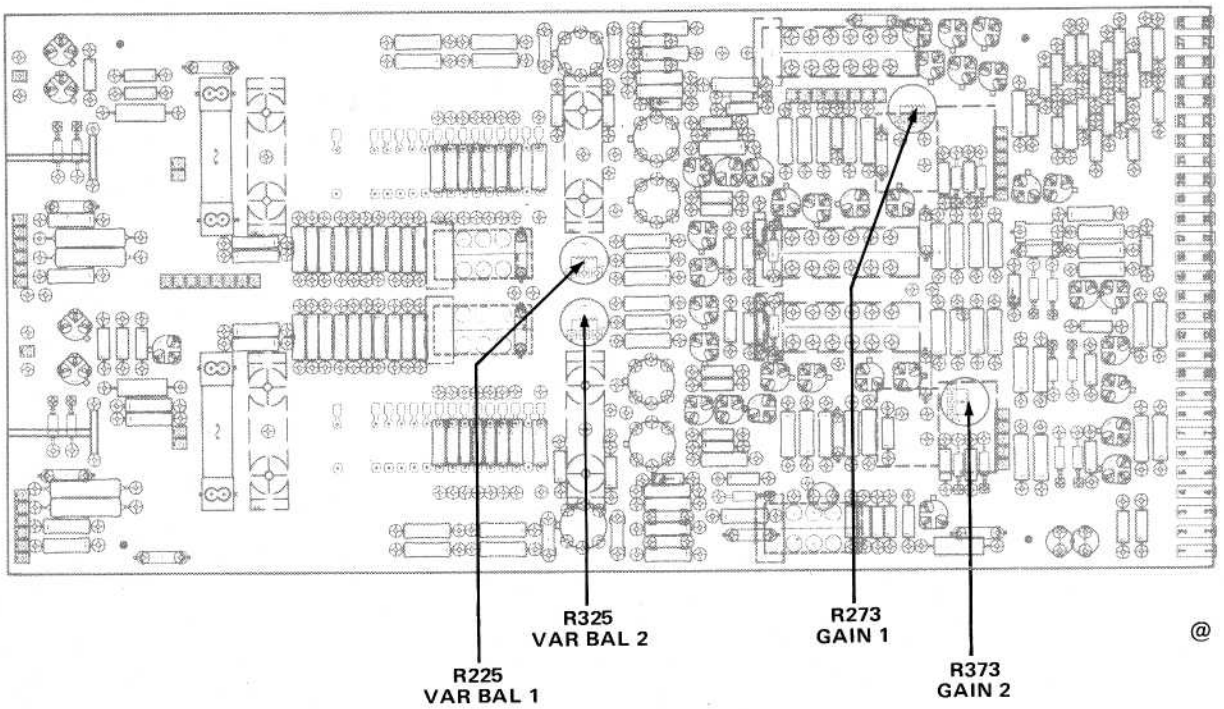

@

1947-7

Fig. 4-3. Adjustment locations.

A1 – CH 1 PREAMPLIFIER CIRCUIT B

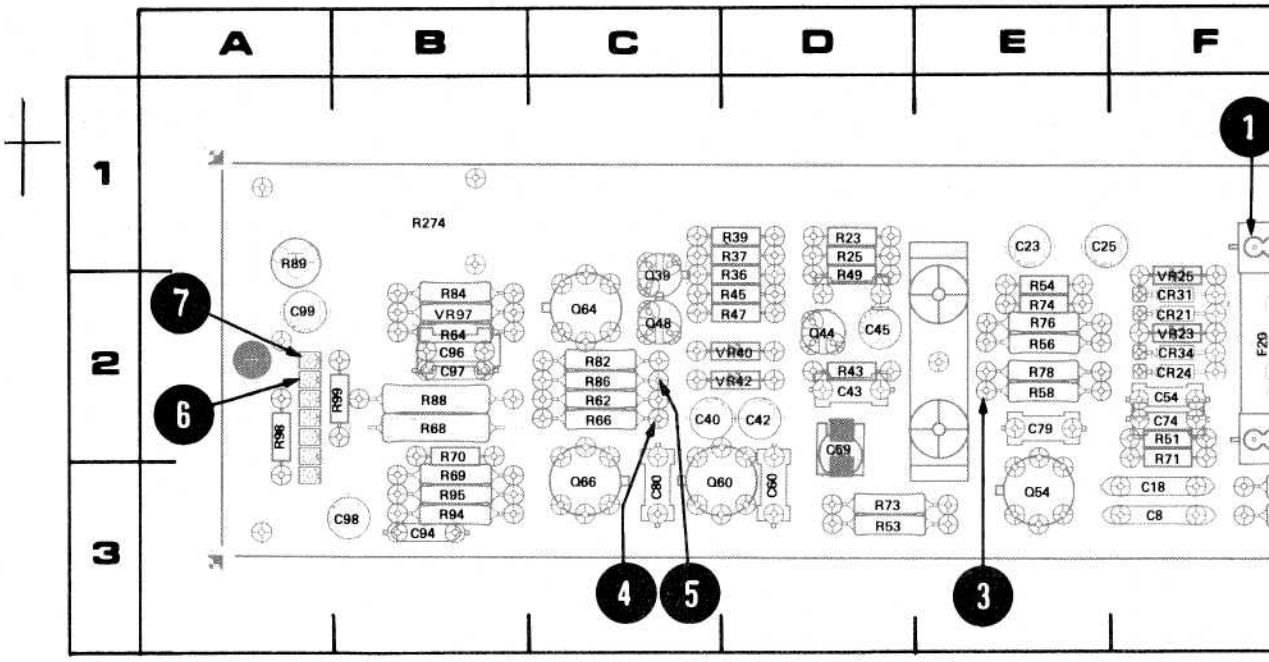

A2 – CH 2 PREAMPLIFIER CIRCUIT B

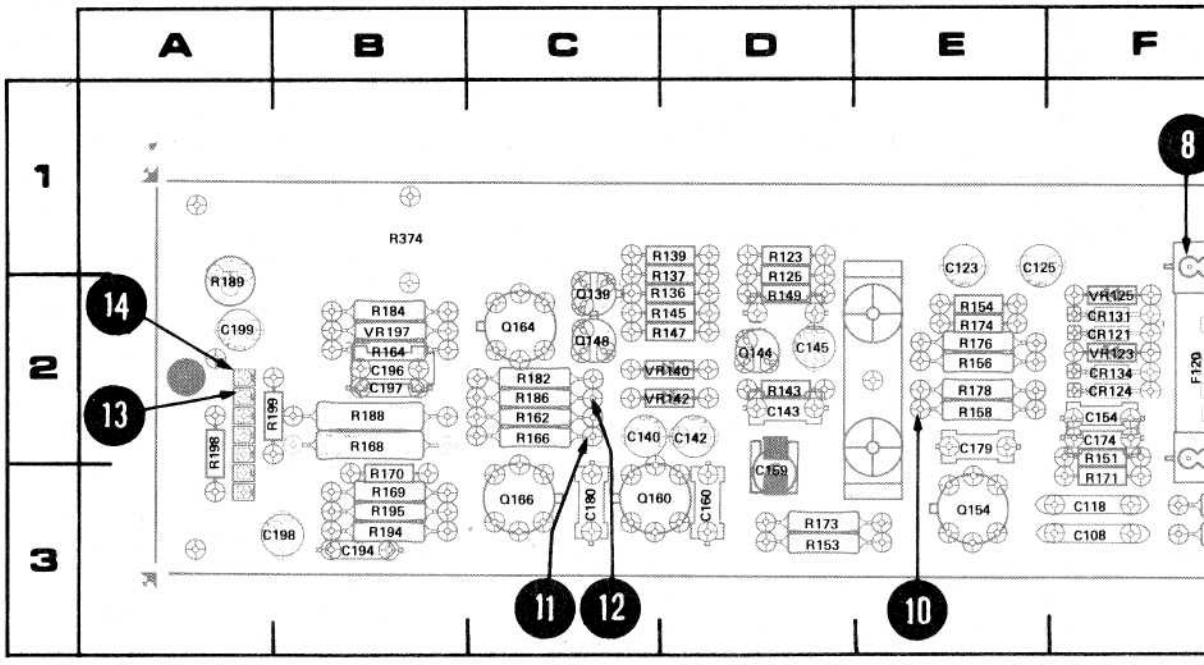

Fig. 4-4. A1, A2–Channel 1 and 2 Preamplifier circuit board compo

PLIFIER CIRCUIT BOARD

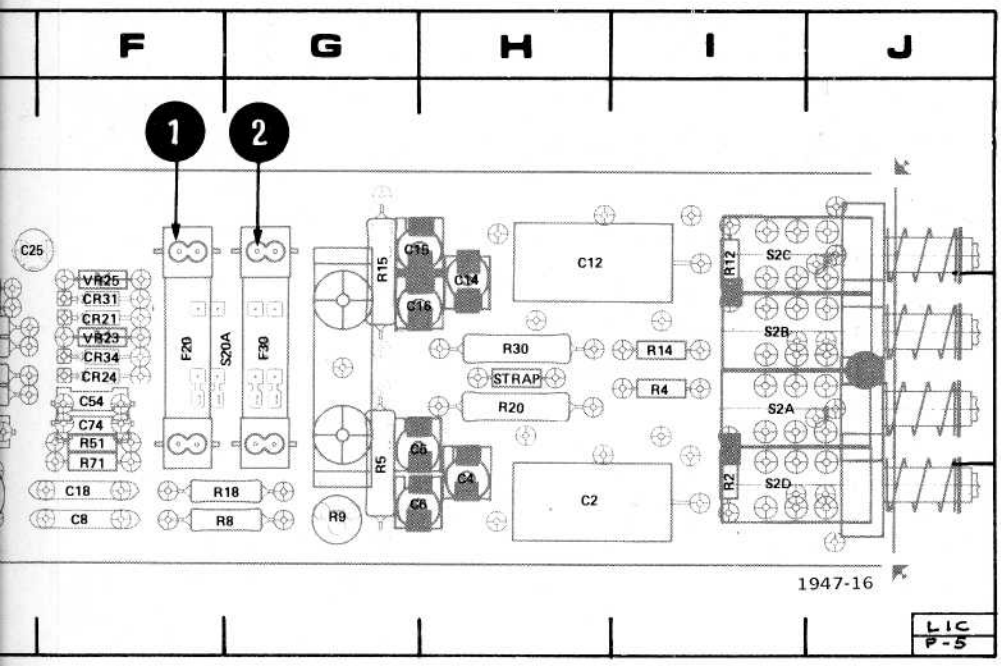

CKT NO	GRID LOC	CKT NO	GR LO
C2	3H	C45	2D
C4	3H		
C5	3H	C54	2F
C6	3H	C59	3D
C8	3F	C60	3D
C12	2H	C74	2F
C14	2H	C79	2E
C15	1H	C80	3C
C16	2H	C94	3B
C18	3F	C96	2B
C23	1E	C97	2B
C25	1E	C98	3B
C40	2C	C99	2A
C42	2D		
C43	2D	CR21	2F

PLIFIER CIRCUIT BOARD

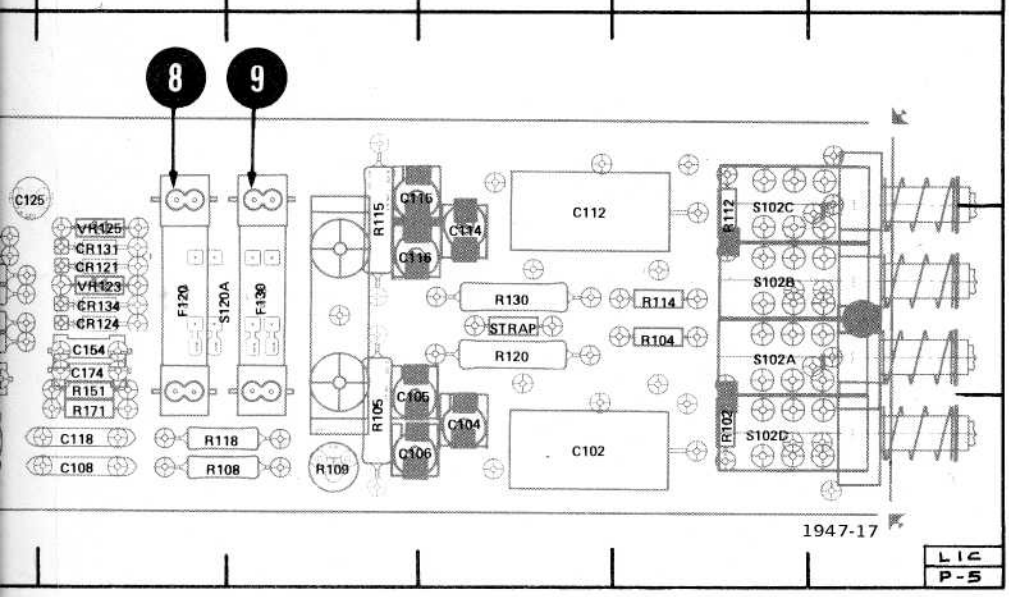

CKT NO	GRID LOC	CKT NO	GR LO
C102	3H	C145	2D
C104	2H		
C105	2G	C154	2F
C106	2H	C159	2D
C108	2F	C160	3D
C112	1H	C174	2F
C114	2H	C179	2E
C115	1G	C180	3C
C116	2G	C194	3B
C118	3F	C196	2B
C123	1E	C197	2B
C125	1E	C198	3B
C140	2C	C199	2A
C142	2D		
C143	2D	CR121	2F

A1–CHAN
PREAMPLI
CIRCUIT B

r circuit board component and test point locations.

1947-8

A2–CHAN
PREAMPLI
CIRCUIT B

@

CKT NO	GRID LOC	CKT NO	GRID LOC	CKT NO	GRID LOC	CKT NO	GRID LOC	CKT NO	GRID LOC	CKT NO	GRID LOC
C45	2D	CR24	2F	R2	3I	R43	2D	R71	3F	S2B	2I
		CR31	2F	R4	2I	R45	2D	R73	3D	S2A	2I
C54	2F	CR34	2F	R5	3G	R47	2D	R74	2E	S2C	1I
C59	3D			R8	3G	R49	2D	R76	2E	S2D	3I
C60	3D	F20	2F	R9	3G	R51	2F	R78	2E	S20A	2G
C74	2F	F30	2G	R12	2I	R53	3D	R82	2C	STRAP	2H
C79	2E			R14	2I	R54	2E	R84	2B		
C80	3C	Q39	2C	R15	2G	R56	2E	R86	2C	VR23	2F
C94	3B	Q44	2D	R18	3G	R58	2E	R88	2B	VR25	2F
C96	2B	Q48	2C	R23	1D	R62	2C	R89	2A	VR40	2D
C97	2B	Q54	3E	R25	2D	R64	2B	R94	3B	VR42	2D
C98	3B	Q60	3C	R30	2H	R66	2C	R95	3B	VR97	2B
C99	2A	Q64	2C	R36	2D	R68	2B	R98	2A		
		Q66	3C	R37	2D	R69	3B	R99	2B		
CR21	2F			R39	1D	R70	3B	R274	1B		

CKT NO	GRID LOC	CKT NO	GRID LOC	CKT NO	GRID LOC	CKT NO	GRID LOC	CKT NO	GRID LOC	CKT NO	GRID LOC
C145	2D	CR124	2F	R102	3I	R139	1D	R170	2B	S102A	2I
		CR131	2F	R104	2I	R145	2D	R173	3D	S102B	2I
C154	2F	CR134	2F	R105	2G	R147	2D	R174	2E	S102C	1I
C159	2D			R108	3G	R149	2D	R176	2E	S102D	3I
C160	3D	F120	2F	R109	3G	R151	2F	R178	2E	S120A	2G
C174	2F	F130	2G	R112	1I	R153	3D	R182	2C	STRAP	2H
C179	2E			R114	2I	R154	2E	R184	2B		
C180	3C	Q139	2C	R115	1G	R156	2E	R186	2C	VR123	2F
C194	3B	Q144	2D	R118	3G	R158	2E	R188	2B	VR125	2F
C196	2B	Q148	2C	R120	2H	R162	2C	R189	1A	VR140	2D
C197	2B	Q154	3E	R123	1D	R164	2B	R194	3B	VR142	2D
C198	3B	Q160	3D	R125	1D	R166	2C	R195	3B	VR197	2B
C199	2A	Q164	2C	R130	2H	R168	2B	R198	2A		
		Q166	3C	R136	2D	R169	3B	R199	2B		
CR121	2F			R137	1D	R171	2F	R374	1B		

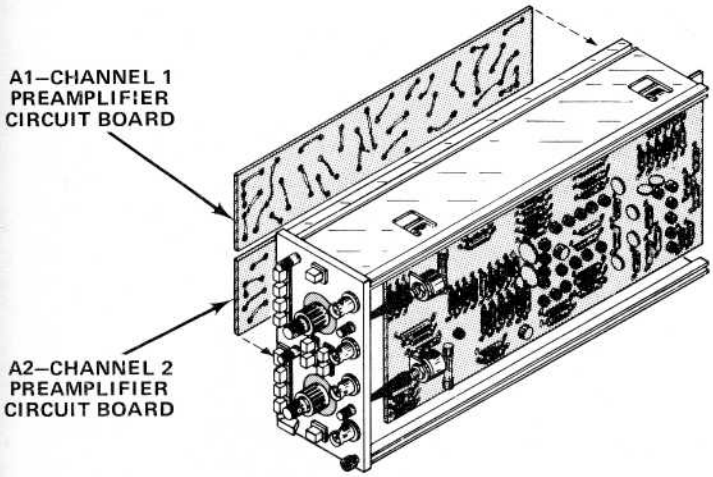

Fig. 4-5. A1, A2–Channel 1 and 2 Preamplifier circuit board locations. 1947-9

VOLTAGE AND WAVEFORM CONDITIONS

The voltages and waveforms shown on this diagram were obtained from a calibrated 5A26 with the following recommended test equipment set-up.

RECOMMENDED TEST EQUIPMENT

Item	Description	Recommended Type
Oscilloscope system	Deflection factor, 2 mV/div to 5 V/div. Input impedance, 1 MΩ. Frequency response, dc to 1 MHz.	Tektronix 5403/D40 with 5A15N Amplifier, P6062A 10X Probe, and 5B10N Time Base Amplifier.
Voltmeter (non-loading digital multimeter)	Input impedance, 10 MΩ. Dc voltage range, ±2 V to ±30 V (full scale).	Tektronix DM502 Digital Multimeter with TM 500-series Power Module.
Sine wave generator	Frequency range, 1 kHz. Output amplitude, 10 V p-p (0 dc offset).	Tektronix FG503 Function Generator with TM 500-series Power Module.
Plug-in extension cable	Capable of extending 5A26 from oscilloscope plug-in compartment.	Tektronix part 067-0645-00.

VOLTAGES

Dc voltages are measured with no signal applied. The voltmeter common is connected to chassis ground. The 5A26 is connected to the oscilloscope left vertical plug-in compartment through the plug-in extension cable and the controls are set as follows:

Control Settings

NOTE

The following control settings apply for either input of CH 1 or CH 2.

VOLTS/DIV	5		
+ Input Coupling		MODE	CH 1 (button in)
AC	OUT:DC (button out)	BW LIMIT	OUT: 1 MHz (button out)
GND	GND (button in)	DISPLAY	ON (button in)
– Input Coupling		POS	Position trace to center screen
AC	OUT:DC (button in)		
GND	GND (button in)		

Voltages are accurate to within 20%.

WAVEFORMS

The 5A26 is connected to the oscilloscope left vertical plug-in compartment through the plug-in extension cable. The amplifier plug-in is inserted in the right vertical oscilloscope plug-in compartment and the time-base plug-in is inserted in the extreme right oscilloscope plug-in compartment. A 1 kilohertz, 10 volt peak-to-peak sine wave is applied to the + or – input (single-ended). Waveforms are taken through the 10X probe and are accurate to within 20%.

Control Settings

Time Base

Sweep Rate	2 ms/div	Mode	Alternate

NOTE

The following control settings apply for either input of CH 1 or CH 2.

VOLTS/DIV	2		
+ Input Coupling		MODE	CH 1 (button in)
AC	OUT:DC (button out)	TRIGGER	OUT:CH 1 (button out)
GND	Off (button out)	BW LIMIT	OUT:1 MHz (button out)
– Input Coupling		DISPLAY	ON (button in)
AC	OUT:DC (button in)	POS	Position trace to center screen
GND	Off (button out)		

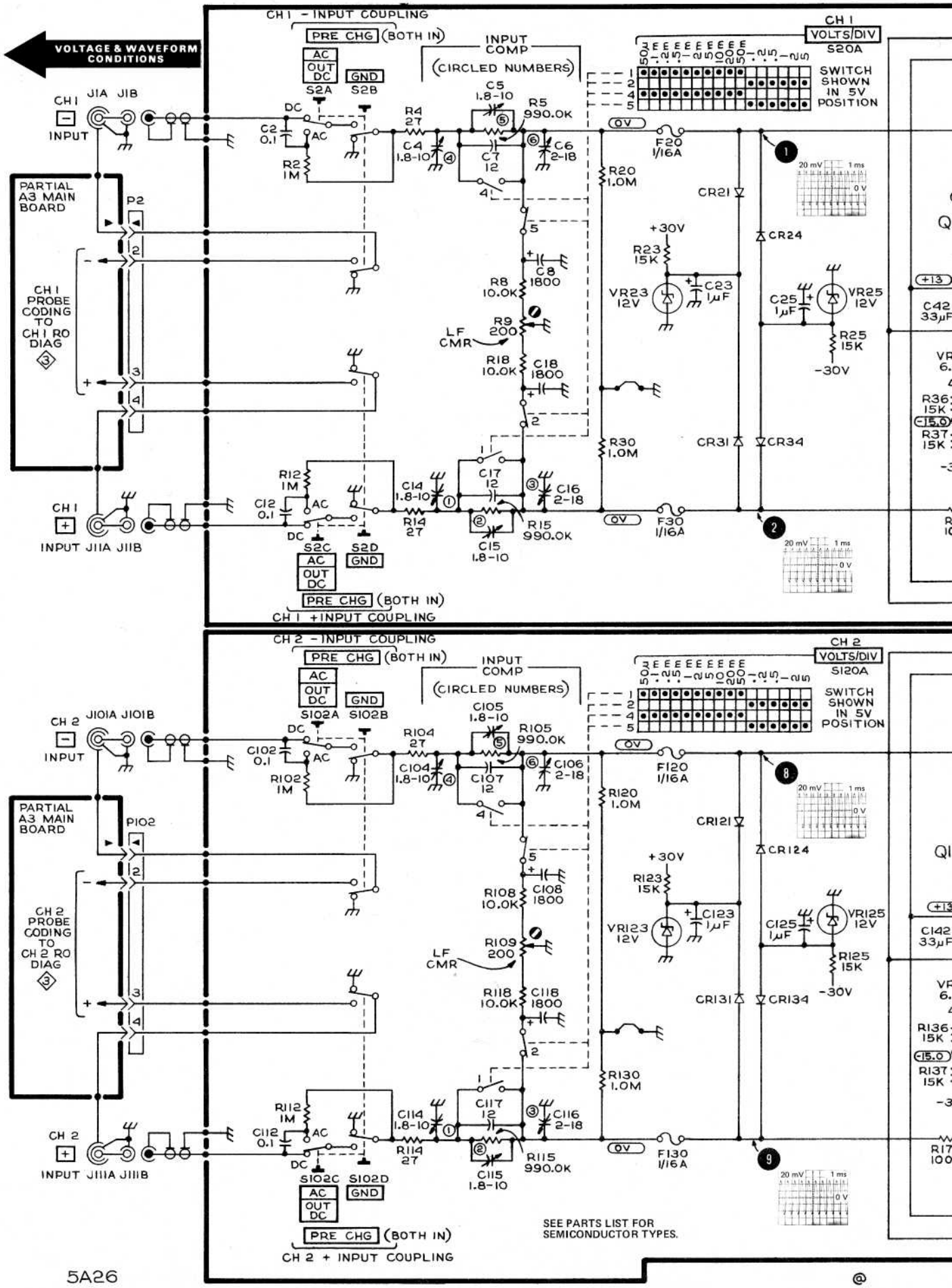
VOLTAGE & WAVEFORM CONDITIONS
CH 1 - INPUT COUPLING
PRE CHG (BOTH IN)
AC
OUT DC
GND
S2A
S2B
INPUT COMP
(CIRCLED NUMBERS)
CH 1
VOLTS/DIV
S20A
SWITCH SHOWN IN 5V POSITION
CH 1 INPUT
J1A J1B
PARTIAL A3 MAIN BOARD
P2
CH 1 PROBE CODING TO CH 1 RO DIAG
C2 0.1
R2 1M
R4 27
C4 1.8-10
C5 1.8-10
R5 990.0K
C7 12
C6 2-18
R8 10.0K
C8 1800
R9 200
LF CMR
R18 10.0K
C18 1800
R12 1M
C12 0.1
C14 1.8-10
C17 12
C16 2-18
R14 27
C15 1.8-10
R15 990.0K
CH 1 INPUT J1IA J1IB
S2C
S2D
CH 1 +INPUT COUPLING
F20 1/16A
F30 1/16A
R20 1.0M
R30 1.0M
CR21
CR24
CR31
CR34
+30V
R23 15K
VR23 12V
C23 1μF
C25 1μF
VR25 12V
R25 15K
-30V
CH 2 - INPUT COUPLING
CH 2
VOLTS/DIV
S120A
CH 2 INPUT
J101A J101B
PARTIAL A3 MAIN BOARD
P102
CH 2 PROBE CODING TO CH 2 RO DIAG
C102 0.1
R102 1M
R104 27
C104 1.8-10
C105 1.8-10
R105 990.0K
C107 12
C106 2-18
R108 10.0K
C108 1800
R109 200
R118 10.0K
C118 1800
R112 1M
C112 0.1
C114 1.8-10
C117 12
C116 2-18
R114 27
C115 1.8-10
R115 990.0K
CH 2 INPUT J1IIA J1IIB
S102C
S102D
CH 2 + INPUT COUPLING
F120 1/16A
F130 1/16A
R120 1.0M
R130 1.0M
CR121
CR124
CR131
CR134
+30V
R123 15K
VR123 12V
C123 1μF
C125 1μF
VR125 12V
R125 15K
-30V
SEE PARTS LIST FOR SEMICONDUCTOR TYPES.

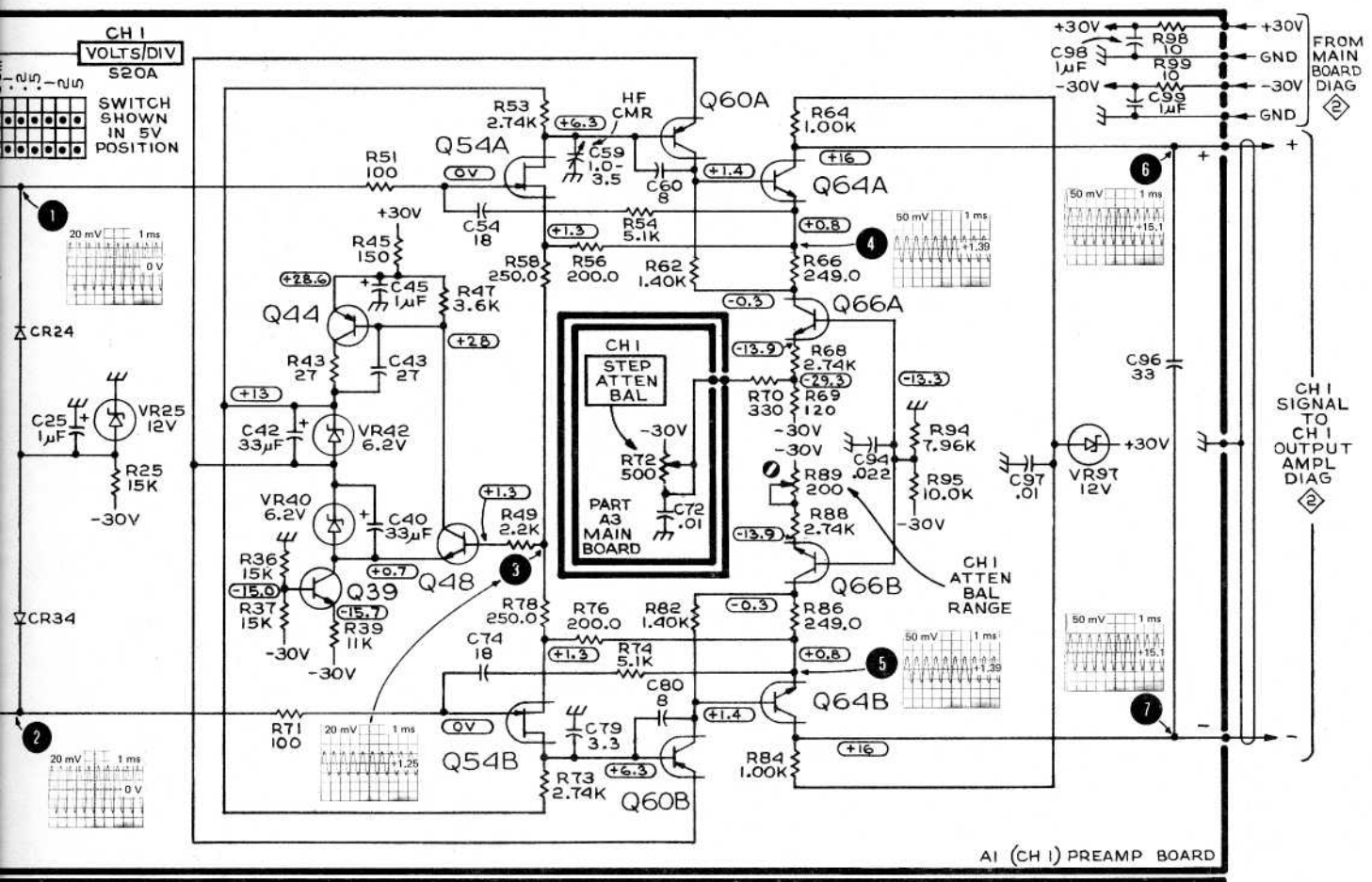
CH 1
VOLTS/DIV
S20A
SWITCH SHOWN IN 5V POSITION
Q54A
Q60A
Q64A
Q44
Q66A
Q66B
Q39
Q48
Q54B
Q60B
Q64B
CH 1 STEP ATTEN BAL
PART A3 MAIN BOARD
CH 1 ATTEN BAL RANGE
FROM MAIN BOARD DIAG
CH 1 SIGNAL TO CH 1 OUTPUT AMPL DIAG
A1 (CH 1) PREAMP BOARD

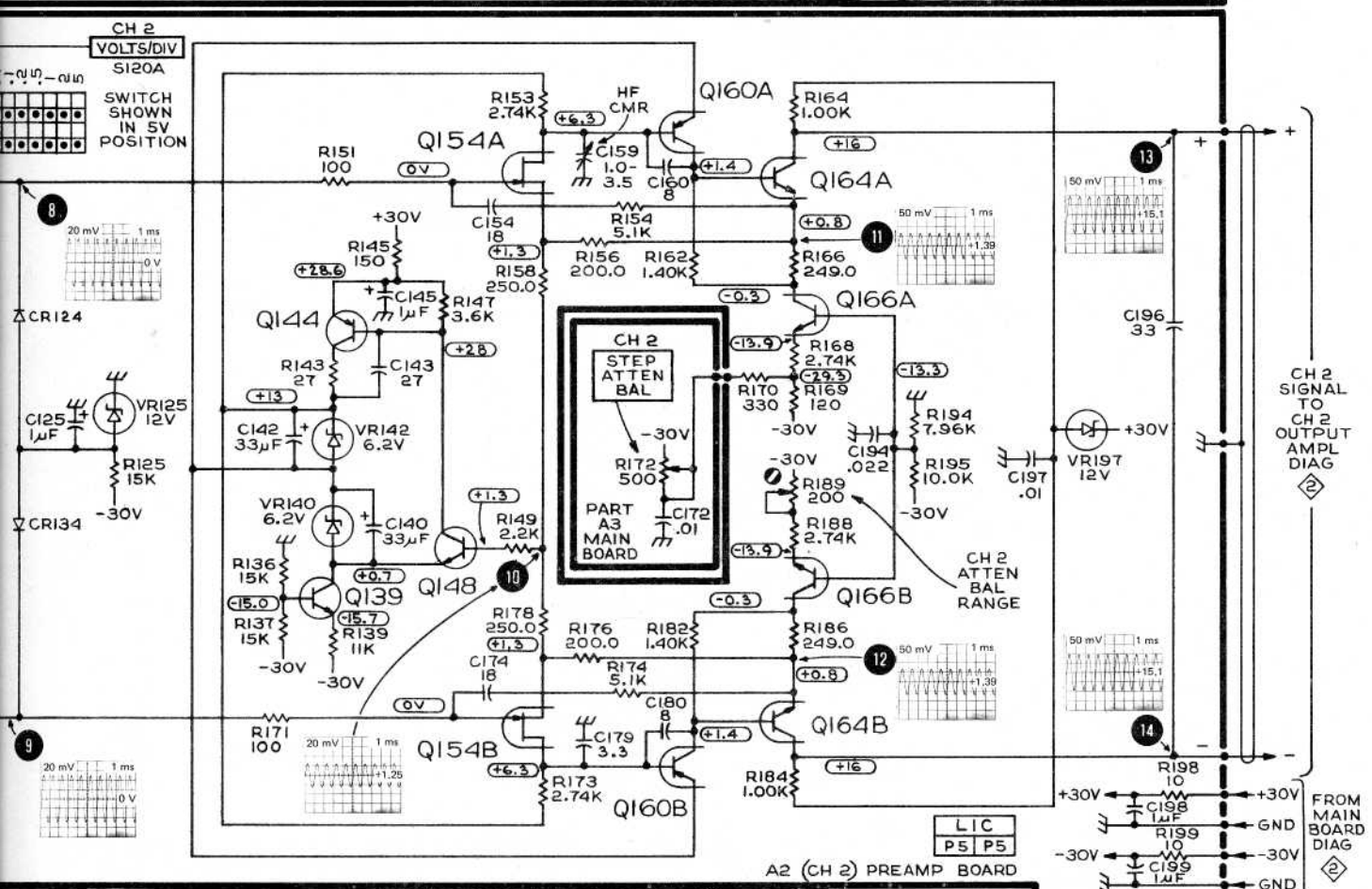
CH 2
VOLTS/DIV
S120A
SWITCH SHOWN IN 5V POSITION
Q154A
Q160A
Q164A
Q144
Q166A
Q166B
Q139
Q148
Q154B
Q160B
Q164B
CH 2 STEP ATTEN BAL
PART A3 MAIN BOARD
CH 2 ATTEN BAL RANGE
FROM MAIN BOARD DIAG
CH 2 SIGNAL TO CH 2 OUTPUT AMPL DIAG
LIC
P5 P5
A2 (CH 2) PREAMP BOARD

VOLTAGE AND WAVEFORM CONDITIONS

The voltages and waveforms shown on this diagram were obtained from a calibrated 5A26 with the following recommended test equipment and set-up.

RECOMMENDED TEST EQUIPMENT

Item	Description	Recommended Type
Oscilloscope system	Deflection factor, 2 mV/div to 5 V/div. Input impedance, 1 MΩ. Frequency response, dc to 1 MHz.	Tektronix 5403/D40 with 5A15N Amplifier, P6062A 10X probe, and 5B10N Time Base Amplifier.
Voltmeter (non-loading digital multimeter)	Input impedance, 10 MΩ. Dc voltage range, ±2 V to ±30 V (full scale).	Tektronix DM502 Digital Multimeter with TM 500-series Power Module.
Sine wave generator	Frequency range, 1 kHz. Output amplitude, 10 V p-p (0 V dc offset).	Tektronix FG 503 Function Generator with TM 500-series Power Module.
Plug-in extension cable	Capable of extending 5A26 from oscilloscope plug-in compartment.	Tektronix part 067-0645-00.

VOLTAGES

Dc voltages are measured with no signal applied. The voltmeter common is connected to chassis ground. The 5A26 is connected to the oscilloscope left vertical plug-in compartment through the plug-in extension cable and the controls are set as follows:

Control Settings

NOTE

The following control settings apply for either input of CH 1 or CH 2.

VOLTS/DIV	5
+ Input Coupling	
AC	OUT:DC (button out)
GND	GND (button in)
—Input Coupling	
AC	OUT:DC (button in)
GND	GND (button in)

MODE[1]	CH 1 (button in)
BW LIMIT	OUT:1 MHz (button out)
DISPLAY	ON (button in)
POS	Position trace to center screen

Voltages are accurate to within 20%.

[1] **Voltages with † on this diagram apply only with CH 1 MODE button pressed in.**

WAVEFORMS

The 5A26 is connected to the oscilloscope left vertical plug-in compartment through the plug-in extension cable. The amplifier plug-in is inserted to the right vertical oscilloscope plug-in compartment and the time-base plug-in is inserted in the extreme right oscilloscope plug-in compartment. A 1 kilohertz, 10 volt peak-to-peak sine wave is applied to the + or — input (single-ended). Waveforms are taken through the 10X probe and are accurate to within 20%.

Control Settings

NOTE

The following control settings apply for either input of CH 1 or CH 2.

VOLTS/DIV	2
+ Input Coupling	
AC	OUT:DC (button in)
GND	Off (button out)
— Input Coupling	
AC	OUT:DC (button in)
GND	Off (button out)

MODE	CH 1 (button in)
TRIGGER	OUT:CH 1 (button out)
BW LIMIT	OUT: 1 MHz (button out)
DISPLAY	ON (button in)
POS	Position trace to center screen

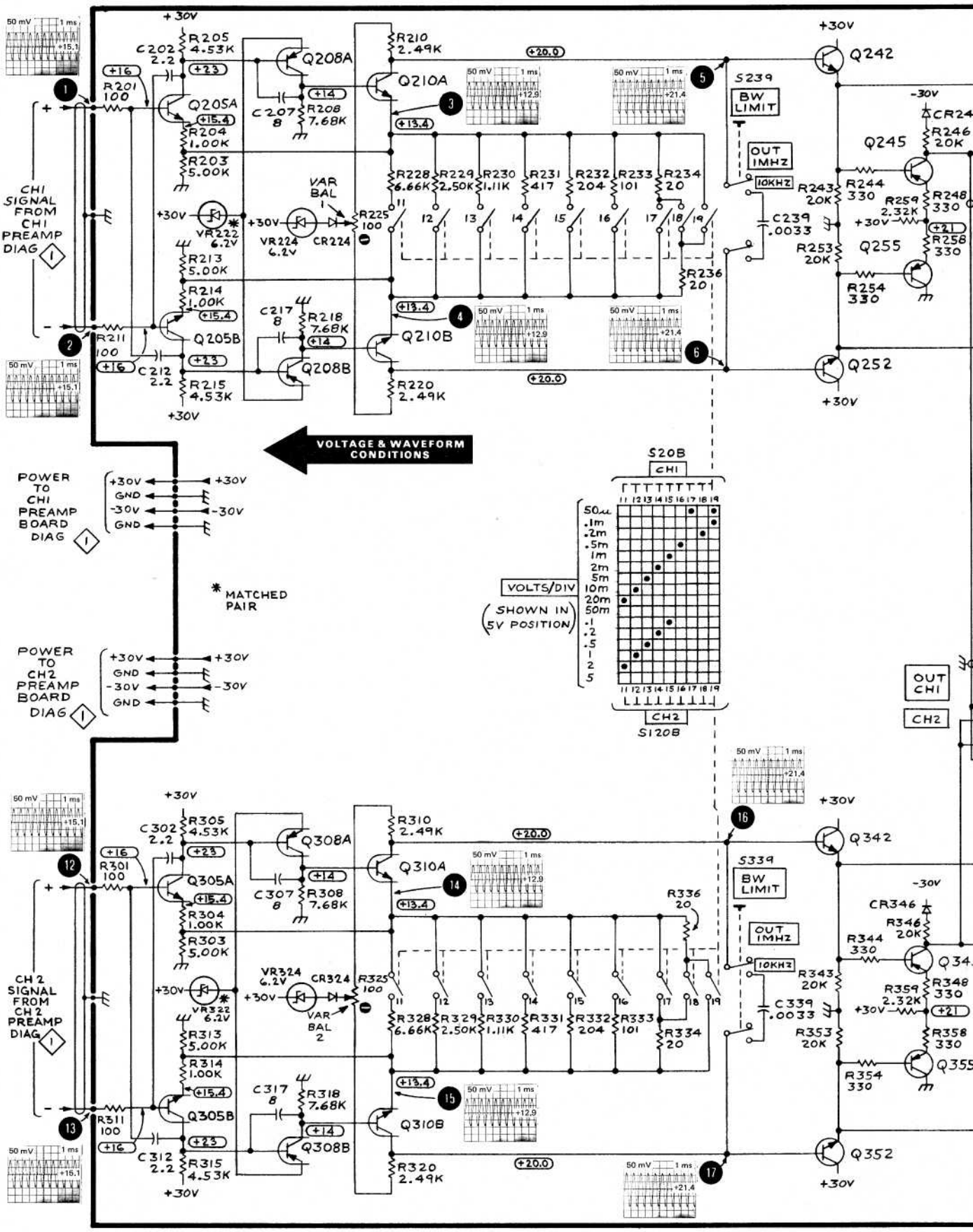
CH1 SIGNAL FROM CH1 PREAMP DIAG 1
CH2 SIGNAL FROM CH2 PREAMP DIAG 1
VOLTAGE & WAVEFORM CONDITIONS
POWER TO CH1 PREAMP BOARD DIAG 1
POWER TO CH2 PREAMP BOARD DIAG 1
+30V
GND
-30V
* MATCHED PAIR
S20B
CH1
VOLTS/DIV
(SHOWN IN 5V POSITION)
CH2
S120B
S239
S339
BW LIMIT
OUT 1MHZ
10KHZ
OUT CH1
CH2
VAR BAL 1
VAR BAL 2
Q242
Q245
Q255
Q252
Q342
Q352
Q208A
Q205A
Q210A
Q205B
Q210B
Q208B
Q308A
Q305A
Q310A
Q305B
Q310B
Q308B
R201 100
R211 100
R301 100
R311 100
R225 100
R325 100
R228 6.66K
R229 2.50K
R230 1.11K
R231 417
R232 204
R233 101
R234 20
R236 20
R328 6.66K
R329 2.50K
R330 1.11K
R331 417
R332 204
R333 101
R334 20
R336 20
C239 .0033
C339 .0033
R243 20K
R253 20K
R343 20K
R353 20K
R244 330
R254 330
R344 330
R354 330
R246 20K
R346 20K
R248 330
R258 330
R358 330
R259 2.32K
R359 2.32K
CR246
CR346
VR222 6.2V
VR224 6.2V
VR322 6.2V
VR324 6.2V
CR224
CR324
R220 2.49K
R320 2.49K
R210 2.49K
R310 2.49K
R215 4.53K
R315 4.53K
R205 4.53K
R305 4.53K
R203 5.00K
R213 5.00K
R303 5.00K
R313 5.00K
R204 1.00K
R214 1.00K
R304 1.00K
R314 1.00K
C202 2.2
C212 2.2
C302 2.2
C312 2.2
C207 8
C217 8
C307 8
C317 8
R208 7.68K
R218 7.68K
R308 7.68K
R318 7.68K
50 mV
1 ms

5A26

@

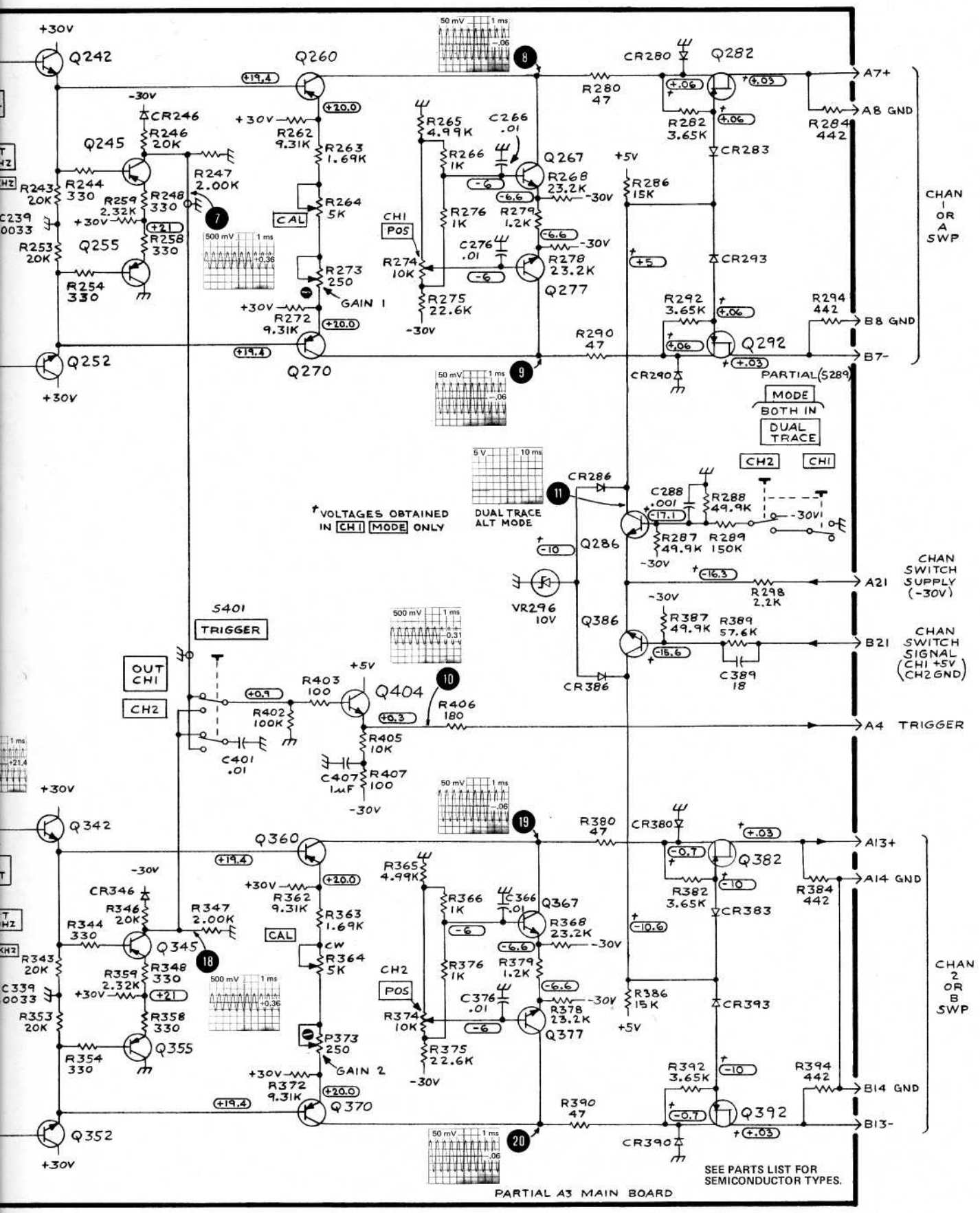

OUTPUT AMPLIFIERS ⟨2⟩

LIC	
P2	P5

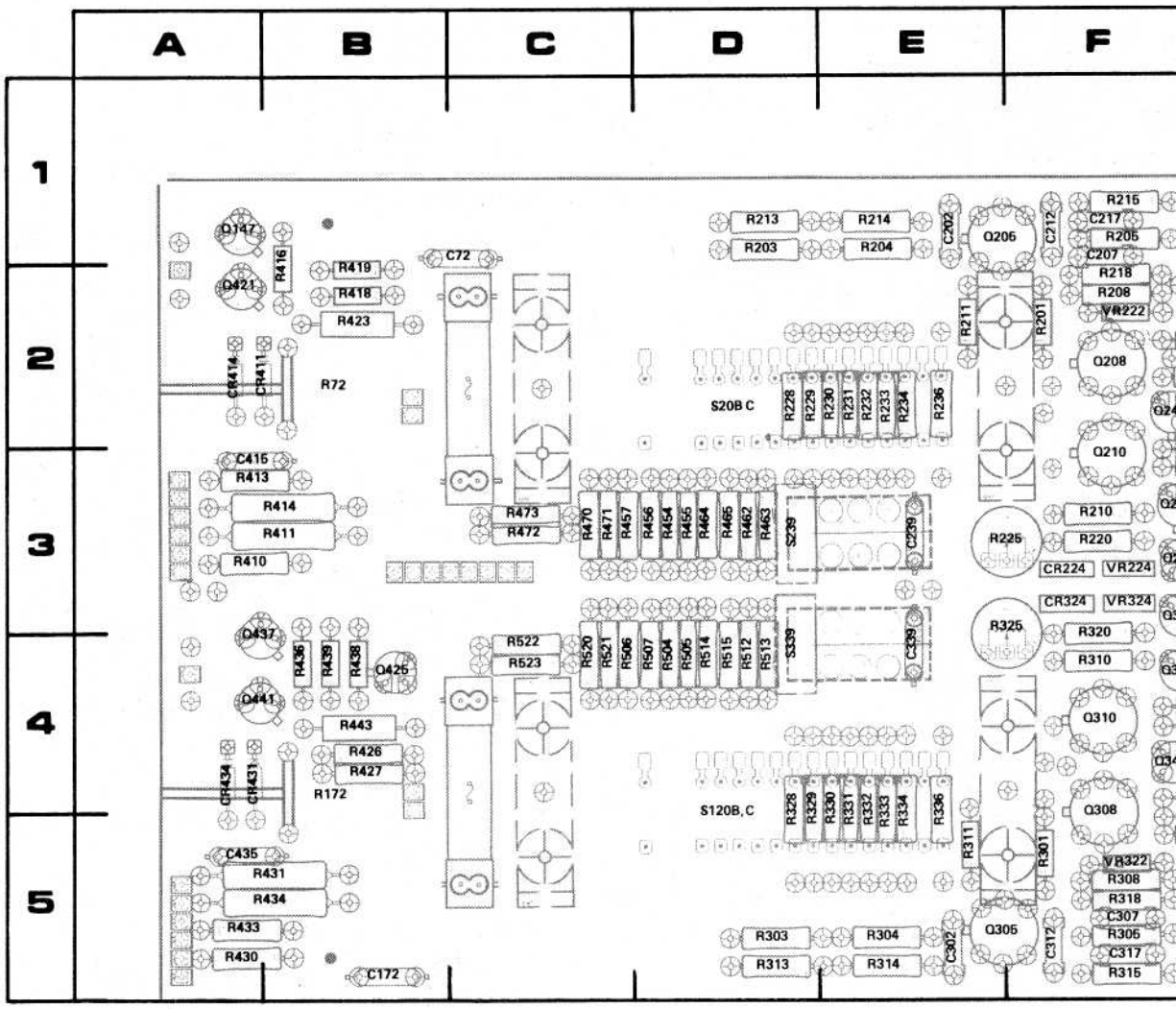

Fig. 4-8. A3—Main circuit board componen

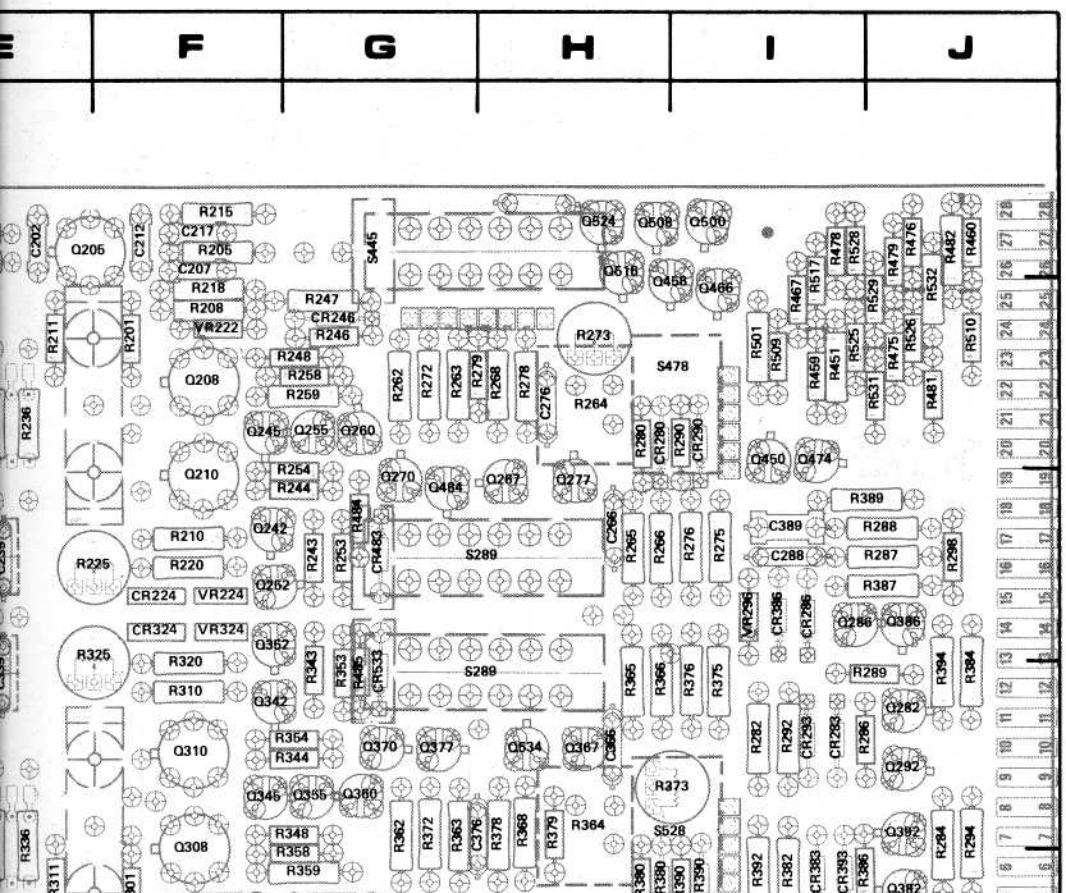

Main circuit board component locations.

1947-12

CKT NO	GRID LOC	CKT NO
C72	1C	CR41
C172	5B	CR43
C202	1E	CR43
C207	1F	CR48
C212	5F	CR53
C217	1F	
C239	3E	L592
C266	3H	L594
C276	2H	
C288	3I	Q205
C302	5E	Q208
C307	5F	Q210
C312	5F	Q242
C317	5F	Q245
C339	4E	Q252
C366	4H	Q255
C376	4G	Q260
C389	3I	Q267
C401	5G	Q270
C407	5G	Q277
C415	3A	Q282
C435	5A	Q286
C445	5I	Q292
C487	1H	Q305
C592	5I	Q308
C594	5I	Q310
		Q342
CR224	3F	Q345
CR246	2G	Q352
CR280	2H	Q355
CR286	3I	Q360
CR290	2I	Q367
CR293	4I	Q370
CR324	3F	Q377
CR346	5G	Q382
CR380	5H	Q386
CR383	5I	Q392
CR386	3I	Q404
CR390	5I	Q417
CR393	5I	Q421
CR411	2A	Q425

@

CKT NO	GRID LOC	CKT NO	GRID LOC	CKT NO	GRID LOC	CKT NO	GRID LOC	CKT NO	GRID LOC	CKT NO	GRID LOC	CKT NO	GRID LOC
C72	1C	CR414	2A	Q437	4A	R258	2G	R331	4E	R413	3A	R501	2I
C172	5B	CR431	4A	Q441	4A	R259	2G	R332	4E	R414	3B	R504	4D
C202	1E	CR434	4A	Q450	2I	R262	2G	R333	4E	R416	1B	R505	4D
C207	1F	CR483	3G	Q458	2I	R263	2G	R334	4E	R418	2B	R506	4C
C212	5F	CR533	4G	Q466	2I	R264	2H	R336	4E	R419	2B	R507	4D
C217	1F			Q474	2I	R265	3H	R343	4G	R423	2B	R509	2I
C239	3E	L592	5J	Q484	3G	R266	3H	R344	4G	R426	4B	R510	2J
C266	3H	L594	5J	Q500	1I	R268	2H	R346	5G	R427	4B	R512	4D
C276	2H			Q508	1H	R272	2G	R347	5G	R430	5A	R513	4D
C288	3I	Q205	1E	Q516	1H	R273	2H	R348	4G	R431	5B	R514	4D
C302	5E	Q208	2F	Q524	1H	R275	3I	R353	4G	R433	5A	R515	4D
C307	5F	Q210	3F	Q534	4H	R276	3I	R354	4G	R434	5B	R517	2I
C312	5F	Q242	3F	R72	2B	R278	2H	R358	5G	R436	4B	R520	4C
C317	5F	Q245	2F	R172	4B	R279	2G	R359	5G	R438	4B	R521	4C
C339	4E	Q252	3F	R201	2F	R280	2H	R362	4G	R439	4B	R522	4C
C366	4H	Q255	2G	R203	1D	R282	4I	R363	4G	R443	4B	R523	4C
C376	4G	Q260	2G	R204	1E	R284	4J	R364	4H	R445	5H	R525	2I
C389	3I	Q267	3H	R205	1F	R286	4I	R365	4H	R451	2I	R526	2J
C401	5G	Q270	3G	R208	2F	R287	3J	R366	4H	R454	3D	R528	1I
C407	5G	Q277	3H	R210	3F	R288	3J	R368	4H	R455	3D	R529	2J
C415	3A	Q282	4J	R211	2E	R289	4J	R372	4G	R456	3D	R531	2J
C435	5A	Q286	3I	R213	1D	R290	2I	R373	4I	R457	3C	R532	2J
C445	5I	Q292	4J	R214	1E	R292	4I	R375	4I	R459	2I		
C487	1H	Q305	5E	R215	1F	R294	4J	R376	4I	R460	1J	S20BC	2D
C592	5I	Q308	4F	R218	2F	R298	3J	R378	4H	R462	3D	S120BC	4D
C594	5I	Q310	4F	R220	3F	R301	5F	R379	4H	R463	3D	S239	3D
		Q342	4F	R225	3F	R303	5D	R380	5H	R464	3D	S289	3H
CR224	3F	Q345	4F	R228	2D	R304	5E	R382	5I	R465	3D	S289	4H
CR246	2G	Q352	3F	R229	2D	R305	5F	R384	4J	R467	2I	S339	4D
CR280	2H	Q355	4G	R230	2E	R308	5F	R387	3J	R470	3C	S401	5G
CR286	3I	Q360	4G	R231	2E	R310	4F	R389	3J	R471	3C	S445	1G
CR290	2I	Q367	4H	R232	2E	R311	5E	R390	5I	R472	3C	S478	2I
CR293	4I	Q370	4G	R233	2E	R313	5D	R392	5I	R473	3C	S528	4I
CR324	3F	Q377	4G	R234	2E	R314	5E	R394	4J	R475	2J		
CR346	5G	Q382	5J	R236	2E	R315	5F	R402	5H	R476	1J	VR222	2F
CR380	5H	Q386	3J	R243	3G	R318	5F	R403	5H	R478	1I	VR224	3F
CR383	5I	Q392	4J	R244	3G	R320	4F	R405	5H	R479	1J	VR296	3I
CR386	3I	Q404	5H	R246	2G	R325	3F	R406	5H	R481	2J	VR322	5F
CR390	5I	Q417	1A	R247	2G	R328	4D	R407	5H	R482	1J	VR324	3F
CR393	5I	Q421	2A	R248	2G	R329	4D	R410	3A	R484	3G		
CR411	2A	Q425	4B	R253	3G	R330	4E	R411	3B	R485	4G		

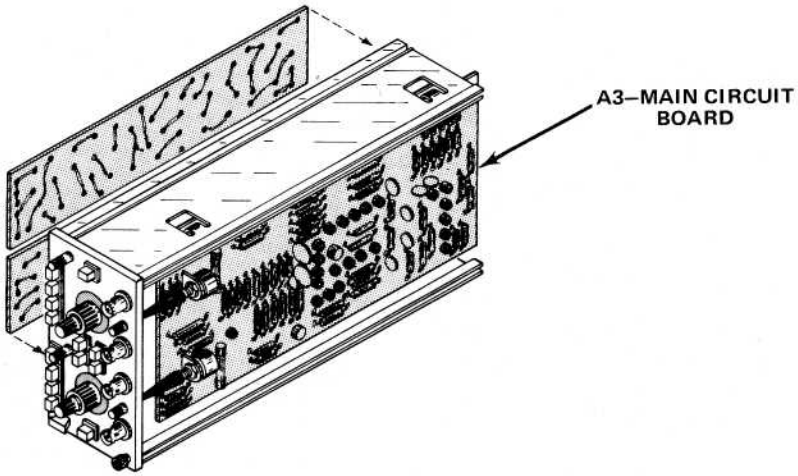

Fig. 4-9. A3—Main circuit board location.

1947-11

VOLTAGE CONDITIONS

The dc voltages shown on this diagram were obtained from a calibrated 5A26 with the following test equipment and set-up.

RECOMMENDED TEST EQUIPMENT

Item	Description	Recommended Type
Voltmeter (Non-loading digital multimeter)	Input impedance: 10 MΩ. Dc voltage range: ±2 V to ±200 V (full scale)	Tektronix DM502 Digital Multimeter with TM 500-series Power Module.
Plug-in Extension Cable	Capable of extending 5A26 from oscilloscope plug-in compartment.	Tektronix part no. 067-0645-00.
10X Probe with readout coding connector	Readout coding resistance: 11 kΩ.	Tektronix P6062A Probe.

Dc voltages are measured with no signal applied. The voltmeter common is connected to chassis ground. The 5A26 is connected to the oscilloscope left vertical plug-in compartment through the plug-in extension cable. The 10X probe is connected to the CH 2 + input and the controls are set as follows:

Control Settings

CH 2 + GND	Off(button out)
CH 1 and CH 2 MODE	In (dual trace)

Voltages are accurate to within 20%.

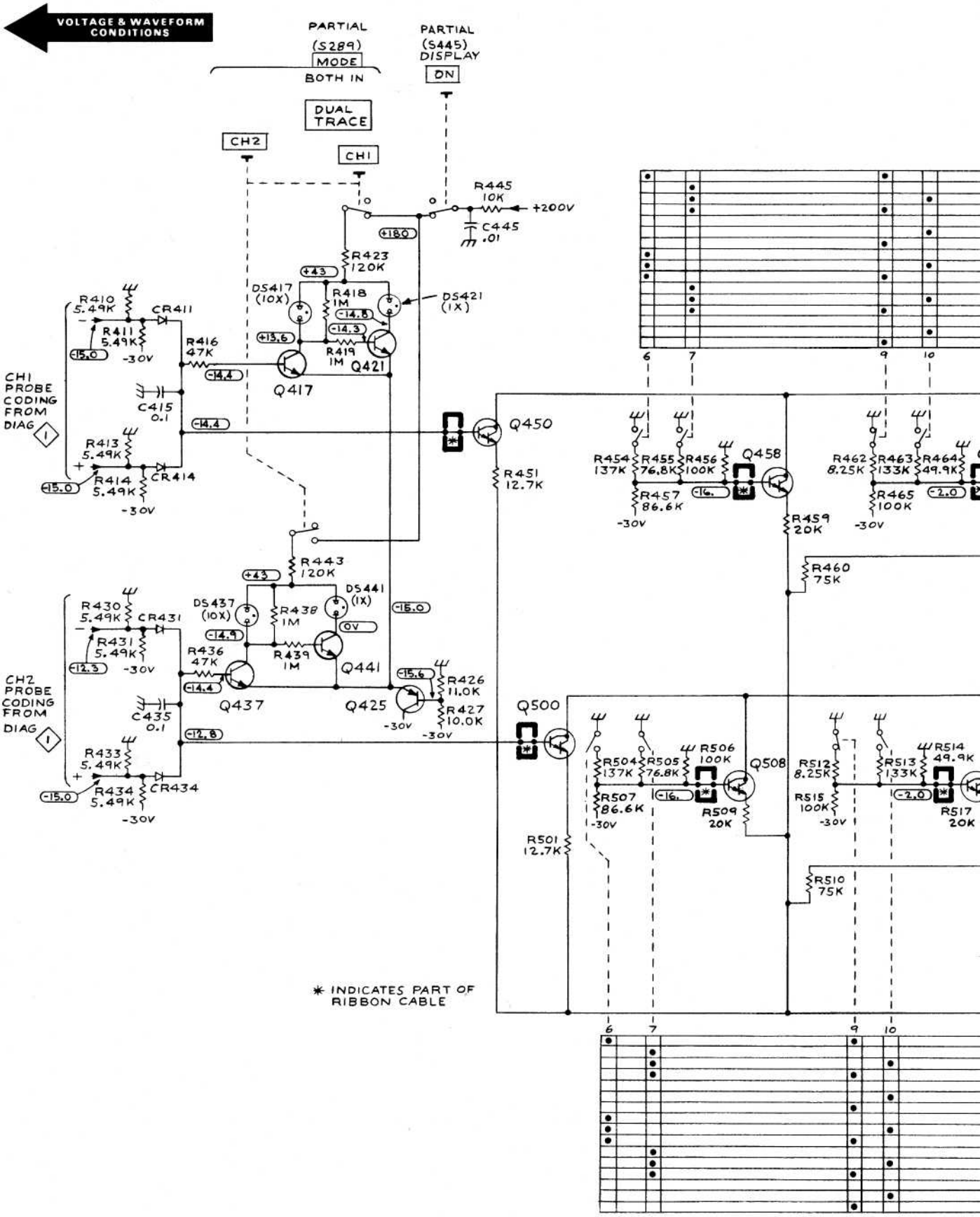

PARTIAL A3 MAIN BOARD

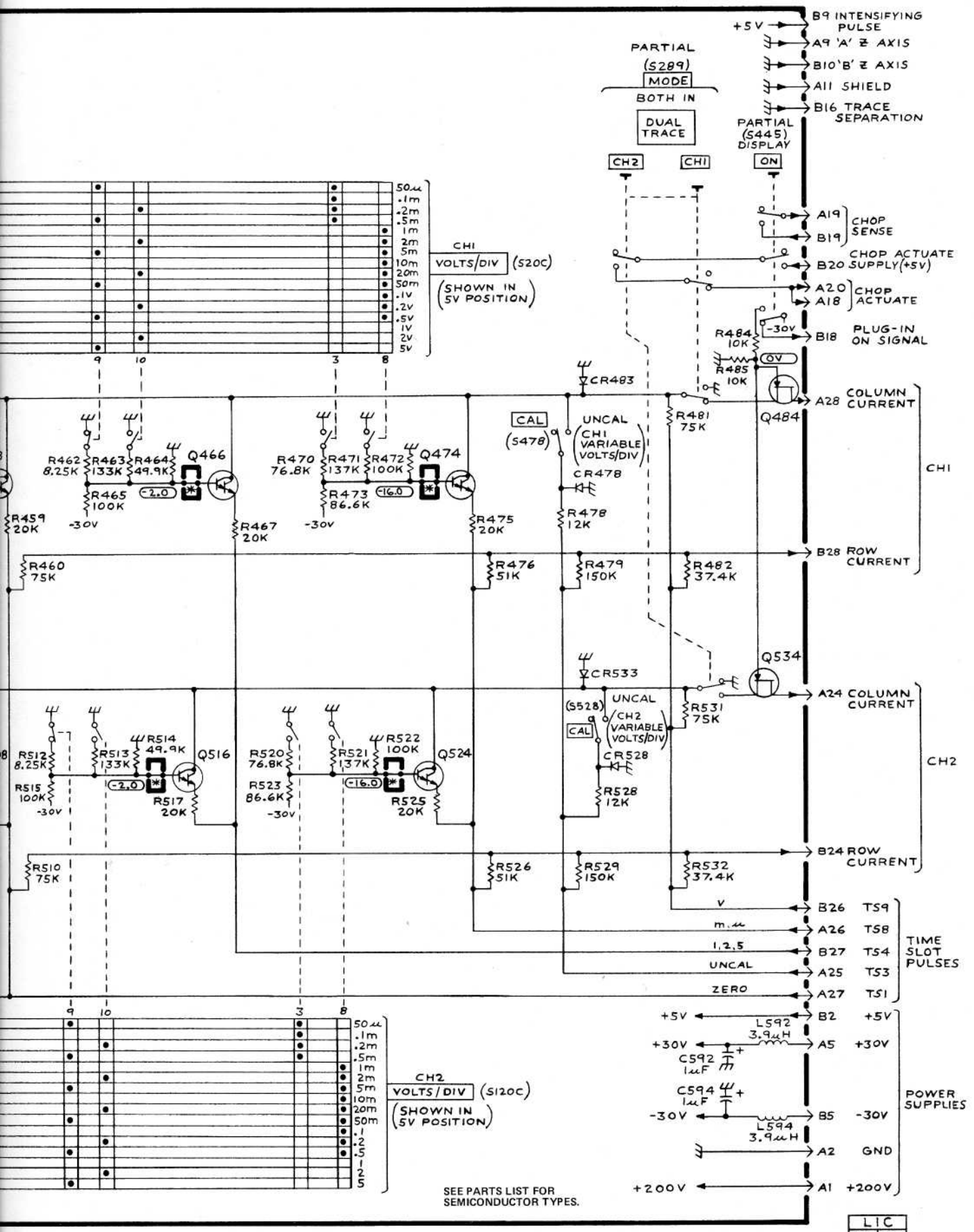
B9 INTENSIFYING PULSE
+5V
A9 'A' Z AXIS
B10 'B' Z AXIS
A11 SHIELD
B16 TRACE SEPARATION
PARTIAL (S289) MODE
BOTH IN
DUAL TRACE
CH2
CH1
PARTIAL (S445) DISPLAY
ON
A19
B19
CHOP SENSE
CHOP ACTUATE SUPPLY (+5V)
B20
A20
A18
CHOP ACTUATE
R484 10K
-30V
B18
PLUG-IN ON SIGNAL
R485 10K
0V
CR483
A28
COLUMN CURRENT
Q484
R481 75K
CAL
(S478)
UNCAL
CH1 VARIABLE VOLTS/DIV
CR478
R478 12K
R462 8.25K
R463 133K
R464 49.9K
Q466
R465 100K
-2.0
-30V
R459 20K
R467 20K
R470 76.8K
R471 137K
R472 100K
Q474
R473 86.6K
-16.0
-30V
R475 20K
CH1
B28
ROW CURRENT
R460 75K
R476 51K
R479 150K
R482 37.4K
Q534
CR533
A24
COLUMN CURRENT
(S528)
UNCAL
CH2 VARIABLE VOLTS/DIV
CAL
R531 75K
CR528
R528 12K
R512 8.25K
R513 133K
R514 49.9K
Q516
R515 100K
-2.0
-30V
R517 20K
R520 76.8K
R521 137K
R522 100K
Q524
R523 86.6K
-16.0
-30V
R525 20K
CH2
B24
ROW CURRENT
R510 75K
R526 51K
R529 150K
R532 37.4K
V
B26 TS9
m.u
A26 TS8
1,2,5
B27 TS4
UNCAL
A25 TS3
ZERO
A27 TS1
TIME SLOT PULSES
+5V
B2 +5V
L592 3.9uH
+30V
A5 +30V
C592 1uF
C594 1uF
-30V
B5 -30V
L594 3.9uH
A2 GND
POWER SUPPLIES
+200V
A1 +200V
CH1 VOLTS/DIV (S20C)
(SHOWN IN 5V POSITION)
CH2 VOLTS/DIV (S120C)
(SHOWN IN 5V POSITION)
50u .1m .2m .5m 1m 2m 5m 10m 20m 50m .1v .2v .5v 1v 2v 5v
9 10 3 8
SEE PARTS LIST FOR SEMICONDUCTOR TYPES.
L1C
B2 P5
READOUT 3

REPLACEABLE MECHANICAL PARTS

PARTS ORDERING INFORMATION

Replacement parts are available from or through your local Tektronix, Inc. Field Office or representative.

Changes to Tektronix instruments are sometimes made to accommodate improved components as they become available, and to give you the benefit of the latest circuit improvements developed in our engineering department. It is therefore important, when ordering parts, to include the following information in your order: Part number, instrument type or number, serial number, and modification number if applicable.

If a part you have ordered has been replaced with a new or improved part, your local Tektronix, Inc. Field Office or representative will contact you concerning any change in part number.

Change information, if any, is located at the rear of this manual.

SPECIAL NOTES AND SYMBOLS

X000	Part first added at this serial number
00X	Part removed after this serial number

FIGURE AND INDEX NUMBERS

Items in this section are referenced by figure and index numbers to the illustrations.

INDENTATION SYSTEM

This mechanical parts list is indented to indicate item relationships. Following is an example of the indentation system used in the description column.

1 2 3 4 5 Name & Description

Assembly and/or Component
Attaching parts for Assembly and or Component
- - - * - - -
Detail Part of Assembly and/or Component
Attaching parts for Detail Part
- - - * - - -
Parts of Detail Part
Attaching parts for Parts of Detail Part
- - - * - - -

Attaching Parts always appear in the same indentation as the item it mounts, while the detail parts are indented to the right. Indented items are part of, and included with, the next higher indentation. The separation symbol - - - * - - - indicates the end of attaching parts.

Attaching parts must be purchased separately, unless otherwise specified.

ITEM NAME

In the Parts List, an Item Name is separated from the description by a colon (:). Because of space limitations, an Item Name may sometimes appear as incomplete. For further Item Name identification, the U.S. Federal Cataloging Handbook H6-1 can be utilized where possible.

ABBREVIATIONS

"	INCH
#	NUMBER SIZE
ACTR	ACTUATOR
ADPTR	ADAPTER
ALIGN	ALIGNMENT
AL	ALUMINUM
ASSEM	ASSEMBLED
ASSY	ASSEMBLY
ATTEN	ATTENUATOR
AWG	AMERICAN WIRE GAGE
BD	BOARD
BRKT	BRACKET
BRS	BRASS
BRZ	BRONZE
BSHG	BUSHING
CAB	CABINET
CAP	CAPACITOR
CER	CERAMIC
CHAS	CHASSIS
CKT	CIRCUIT
COMP	COMPOSITION
CONN	CONNECTOR
COV	COVER
CPLG	COUPLING
CRT	CATHODE RAY TUBE
DEG	DEGREE
DWR	DRAWER
ELCTRN	ELECTRON
ELEC	ELECTRICAL
ELCTLT	ELECTROLYTIC
ELEM	ELEMENT
EPL	ELECTRICAL PARTS LIST
EQPT	EQUIPMENT
EXT	EXTERNAL
FIL	FILLISTER HEAD
FLEX	FLEXIBLE
FLH	FLAT HEAD
FLTR	FILTER
FR	FRAME or FRONT
FSTNR	FASTENER
FT	FOOT
FXD	FIXED
GSKT	GASKET
HDL	HANDLE
HEX	HEXAGON
HEX HD	HEXAGONAL HEAD
HEX SOC	HEXAGONAL SOCKET
HLCPS	HELICAL COMPRESSION
HLEXT	HELICAL EXTENSION
HV	HIGH VOLTAGE
IC	INTEGRATED CIRCUIT
ID	INSIDE DIAMETER
IDENT	IDENTIFICATION
IMPLR	IMPELLER
IN	INCH
INCAND	INCANDESCENT
INSUL	INSULATOR
INTL	INTERNAL
LPHLDR	LAMPHOLDER
MACH	MACHINE
MECH	MECHANICAL
MTG	MOUNTING
NIP	NIPPLE
NON WIRE	NOT WIRE WOUND
OBD	ORDER BY DESCRIPTION
OD	OUTSIDE DIAMETER
OVH	OVAL HEAD
PH BRZ	PHOSPHOR BRONZE
PL	PLAIN or PLATE
PLSTC	PLASTIC
PN	PART NUMBER
PNH	PAN HEAD
PWR	POWER
RCPT	RECEPTACLE
RES	RESISTOR
RGD	RIGID
RLF	RELIEF
RTNR	RETAINER
SCH	SOCKET HEAD
SCOPE	OSCILLOSCOPE
SCR	SCREW
SE	SINGLE END
SECT	SECTION
SEMICOND	SEMICONDUCTOR
SHLD	SHIELD
SHLDR	SHOULDERED
SKT	SOCKET
SL	SLIDE
SLFLKG	SELF-LOCKING
SLVG	SLEEVING
SPR	SPRING
SQ	SQUARE
SST	STAINLESS STEEL
STL	STEEL
SW	SWITCH
T	TUBE
TERM	TERMINAL
THD	THREAD
THK	THICK
TNSN	TENSION
TPG	TAPPING
TRH	TRUSS HEAD
V	VOLTAGE
VAR	VARIABLE
W/	WITH
WSHR	WASHER
XFMR	TRANSFORMER
XSTR	TRANSISTOR

CROSS INDEX MFR. CODE NUMBER TO MANUFACTURER

MFR.CODE	MANUFACTURER	ADDRESS	CITY,STATE,ZIP
0000C	GETTIG ENGINEERING AND MANUFACTURING CO.		SPRINGMILL, PA 16875
08261	SPECTRA-STRIP CORP.	7100 LAMPSON AVE.	GARDEN GROVE, CA 92642
15912	ANSLEY ELECTRONICS CORP., A SUB OF THOMAS AND BETTS CORP.	2828 N. FIGUEROA AT.	LOS ANGELES, CA 90065
22526	BERG ELECTRONICS, INC.	YOUK EXPRESSWAY	NEW CUMBERLAND, PA 17070
45722	USM CORP., PARKER-KALON FASTENER DIV.	1 PEEKAY DRIVE	CLIFTON, NJ 07014
71400	BUSSMAN MFG., DIVISION OF MCGRAW-EDISON CO.	2536 W. UNIVERSITY ST.	ST. LOUIS, MO 63107
71785	TRW ELECTRONIC COMPONENTS, CINCH CONNECTOR OPERATIONS	1501 MORSE AVE.	ELK GROVE VILLAGE, IL 60007
73743	FISCHER SPECIAL MFG. CO.	446 MORGAN ST.	CINCINNATI, OH 45206
74445	HOLO-KROME CO.	31 BROOK ST. WEST	HARTFORD, CT 06110
78189	ILLINOIS TOOL WORKS, INC. SHAKEPROOF DIVISION	ST. CHARLES ROAD	ELGIN, IL 60120
78471	TILLEY MFG. CO.	900 INDUSTRIAL RD.	SAN CARLOS, CA 94070
80009	TEKTRONIX, INC.	P. O. BOX 500	BEAVERTON, OR 97077
83385	CENTRAL SCREW CO.	2530 CRESCENT DR.	BROADVIEW, IL 60153
97464	INDUSTRIAL RETAINING RING CO.	57 CORDIER ST.	IRVINGTON, NJ 07111

EXPLODED VIEW

Fig. & Index No.	Tektronix Part No.	Serial/Model No. Eff	Dscont	Qty	1 2 3 4 5 Name & Description	Mfr Code	Mfr Part Number
1-1	337-1399-00			2	SHLD,ELECTRICAL:SIDE	80009	337-1399-00
-2	366-1317-00			2	KNOB:RED	80009	366-1317-00
	213-0153-00			1	. SETSCREW:5-40 X 0.125 INCH,HEX SOC STL	74445	OBD
-3	366-1618-00			2	KNOB:GRAY,VOLTS/DIV	80009	366-1618-00
	213-0153-00			2	. SETSCREW:5-40 X 0.125 INCH,HEX SOC STL	74445	OBD
-4	384-1114-00			2	EXT SHAFT:0.125 OD X 7.6 LG W/KNOB	80009	384-1114-00
-5	358-0378-00			2	BUSHING,SLEEVE:PRESS MOUNT	80009	358-0378-00
-6	366-1564-00			2	KNOB:GRAY PLASTIC,PRESS MT	80009	366-1564-00
-7	366-1257-14			1	PUSH BUTTON:GRAY--ON	80009	366-1257-14
-8	366-1257-11			4	PUSH BUTTON:GRAY--AC PRE	80009	366-1257-11
-9	366-1257-12			4	PUSH BUTTON:GRAY--CHG GND	80009	366-1257-12
-10	366-1257-17			1	PUSH BUTTON:GRAY--CH1 DUAL	80009	366-1257-17
-11	366-1257-18			1	PUSH BUTTON:GRAY--TRACE CH2	80009	366-1257-18
-12	366-1257-77			2	PUSH BUTTON:GRAY--10KHZ	80009	366-1257-77
-13	366-1557-20			1	PUSH BUTTON:GRAY--CH2	80009	366-1557-20
-14	366-1286-02			1	KNOB:LATCH	80009	366-1286-02
					(ATTACHING PARTS)		
-15	214-1840-00			1	PIN,KNOB SECRG:0.094 OD X 0.120 INCH LONG	80009	214-1840-00
					- - - * - - -		
-16	----- -----			4	CONN,RCPT,ELEC:(SEE J1,J11,J101 J111 EPL)		
-17	426-0681-00			14	FR,PUSH BUTTON:GRAY PLASTIC	80009	426-0681-00
-18	358-0029-00			2	BSHG,MACH.THD:HEX,0.375-32 X 0.438"LONG	80009	358-0029-00
					(ATTACHING PARTS FOR EACH)		
-19	210-0590-00			1	NUT,PLAIN,HEX.:0.375 X 0.438 INCH,STL	73743	2X28269-402
	210-0012-00			2	WASHER,LOCK:INTL,0.375 ID X 0.50" OD STL	78189	1220-02-00-0541C
-20	210-0978-00			1	WASHER,FLAT:0.375 ID X 0.50 INCH OD,STL	78471	OBD
					- - - * - - -		
-21	344-0195-01			1	CLIP,ELECTRICAL:CAM SHAFT	80009	344-0195-01
-22	220-0633-00			1	NUT,PLAIN,KNURL:0.25-28 X 0.25 INCH L,BRS	80009	220-0633-00
-23	333-1874-00			1	PANEL,FRONT:	80009	333-1874-00
					(ATTACHING PARTS)		
-24	355-0170-00			1	STUD,SHOULDERED:6-32 X 0.40 INCH LONG	80009	355-0170-00
					- - - * - - -		
-25	214-1513-01			1	LCH,PLUG-IN RET:	80009	214-1513-01
					(ATTACHING PARTS)		
-26	213-0254-00			1	SCR,TPG,THD CTG:2-56X0.25"100 DEG,FLH STL	45722	OBD
					- - - * - - -		
-27	378-0729-00			4	LENS,LIGHT:	80009	378-0729-00
-28	----- -----			4	LAMP,GLOW:(SEE DS417,421,437,441 EPL)		
-29	200-1860-00			4	COVER,LAMP:	80009	200-1860-00
-30	386-2896-00			1	SUBPANEL,FRONT:	80009	386-2896-00
					(ATTACHING PARTS)		
-31	213-0229-00			3	SCR,TPG,THD FOR:6-20 X0.375"100 DEG,FLH STL	83385	OBD
					- - - * - - -		
-32	337-2005-00			1	SHIELD,ELEC:	80009	337-2005-00
-33	384-1059-00			4	EXTENSION SHAFT:6.58 INCH LONG	80009	384-1059-00
-34	384-1061-00			2	EXTENSION SHAFT:3.981 INCH LONG	80009	384-1061-00
-35	384-1121-00			2	EXTENSION SHAFT:1.41 INCH LONG	80009	384-1121-00
-36	337-2199-00			1	SHIELD,ELEC:CIRCUIT BOARD	80009	337-2199-00
-37	334-2360-00			1	MARKER,IDENT:WARNING	80009	334-2360-00
-38	175-1405-00[1]			1	CA ASSY,SP,ELEC:FLAT,2.0 L W/10 RND FLAT	15912	.100F40152410
	672-0527-00			1	CKT BOARD ASSY:MAIN AND PRE AMP	80009	672-0527-00
					(ATTACHING PARTS)		
-39	213-0336-00			2	SCR,TPG,THD FOR:6-32 X 1.25 INCH,PNH STL	83385	OBD
-40	213-0146-00			2	SCR,TPG,THD FOR:6-20 X 0.313 INCH,PNH STL	83385	OBD

[1]Divided into two separate 5 conductor cable widths.

EXPLODED VIEW

Fig. & Index No.	Tektronix Part No.	Serial/Model No. Eff	Dscont	Qty	1 2 3 4 5 Name & Description	Mfr Code	Mfr Part Number
1-41	361-0516-00			2	SPACER,SLEEVE:0.189 OD X 0.986"LONG BRS	80009	361-0516-00
					- - - * - - -		
	----- -----			-	. CKT BOARD ASSY INCLUDES:		
-42	----- -----			2	. CKT BOARD ASSY:PRE AMP(SEE A1 AND A2 EPL)		
					(ATTACHING PARTS FOR EACH)		
-43	211-0116-00			4	. SCR,ASSEM WSHR:4-40 X 0.312 INCH,PNH BRS	83385	OBD
					- - - * - - -		
	----- -----			-	. . EACH CKT BOARD INCLUDES:		
-44	----- -----			1	. . SWITCH,PUSH:(SEE S2 AND S102 EPL)		
-45	361-0382-00			4	. . SPACER,PB SW:BROWN,0.275 INCH LONG	80009	361-0382-00
-46	337-2200-00			2	. . SHIELD,ELEC:	80009	337-2200-00
-47	344-0154-00			4	. . CLIP,ELECTRICAL:FOR 0.25 INCH DIA FUSE	80009	344-0154-00
-48	200-0687-01			1	. . COV,TRANSISTOR:0.438 DIA X 0.47 INCH H	80009	200-0687-01
-49	136-0235-00			4	. . SOCKET,PLUG-IN:6 CONTACT,ROUND	71785	133-96-12-062
-50	131-0566-00			1	. . LINK,TERM.CONNE:0.086 DIA X 2.375 INCH L	0000C	L-2007-1
-51	376-0051-01			1	. . CPLG,SHAFT,FLEX:FOR 0.125 INCH DIA SHAFTS	80009	376-0051-01
-52	----- -----			1	. . RES.,VARIABLE:(SEE R274,R374 EPL)		
					(ATTACHING PARTS)		
-53	210-0583-00			1	. . NUT,PLAIN,HEX.:0.25-32 X 0.312 INCH,BRS	73743	2X20319-402
-54	210-0046-00			1	. . WASHER,LOCK:INT,0.26 ID X 0.40" OD STL	78189	1214-05-00-0541C
					- - - * - - -		
-55	386-2273-00			1	. . PLATE,VAR RES M:CIRCUIT BOARD MOUNTING	80009	386-2273-00
-56	131-0604-00			4	. . CONTACT,ELEC:0.025 SQ X 0.365 INCH LONG	80009	131-0604-00
	----- -----			2	. ACTR ASSY,CAM S:(SEE S20,S120 EPL)		
					(ATTACHING PARTS FOR EACH)		
-57	211-0116-00			4	. SCR,ASSEM WSHR:4-40 X 0.312 INCH,PNH BRS	83385	OBD
					- - - * - - -		
	----- -----			-	. . EACH ACTUATOR INCLUDES:		
-58	210-0406-00			4	. . NUT,PLAIN,HEX.:4-40 X 0.188 INCH,BRS	73743	2X12161-402
-59	214-1139-02			2	. . SPRING,FLAT:GREEN COLORED	80009	214-1139-02
-60	214-1127-00			2	. . ROLLER,DETENT:0.125 DIA X 0.125 INCH L	80009	214-1127-00
-61	401-0081-02			1	. . BEARING,CAM SW:FRONT	80009	401-0081-02
					(ATTACHING PARTS)		
-62	354-0391-00			1	. . RING,RETAINING:0.395"FREE ID X 0.025" STL	97464	3100-43-CD
					- - - * - - -		
-63	105-0691-00			1	. . ACTUATOR,CAM SW:VOLTS/DIV	80009	105-0691-00
-64	401-0115-00			1	. . BEARING,CAM SW:CENTER	80009	401-0115-00
-65	384-0162-00			2	. EXTENSION SHAFT:0.125 OD X 8.564 L AL	80009	384-0162-00
-66	376-0051-01			2	. CPLG,SHAFT,FLEX:FOR 0.125 INCH DIA SHAFTS	80009	376-0051-01
	213-0048-00			4	. . SETSCREW:4-40 X 0.125 INCH,HEX SOC STL	74445	OBD
-67	----- -----			-	. RES,VARIABLE:(SEE R264,R364 EPL)		
-68	----- -----			-	. CKT BOARD ASSY:MAIN(SEE A3 EPL)		
-69	131-0604-00			30	. . CONTACT,ELEC:0.025 SQ X 0.365 INCH LONG	80009	131-0604-00
-70	----- -----			1	. . SWITCH,PUSH:(SEE S445 EPL)		
-71	361-0383-00			2	. . SPACER,PB SW:CHARCOAL,0.33 INCH LONG	80009	361-0383-00
-72	----- -----			1	. . SWITCH,PUSH:(SEE S401 EPL)		
-73	361-0383-00			2	. . SPACER,PB SW:CHARCOAL,0.33 INCH LONG	80009	361-0383-00
-74	----- -----			1	. . SWITCH,PUSH:(SEE S289 EPL)		
-75	361-0383-00			4	. . SPACER,PB SW:CHARCOAL,0.33 INCH LONG	80009	361-0383-00
-76	----- -----			2	. . SWITCH,PUSH:(SEE S239,S339 EPL)		
-77	----- -----			2	. . RES.,VARIABLE:(SEE R72,R172 EPL)		
					(ATTACHING PARTS FOR EACH)		
-78	210-0583-00			1	. . NUT,PLAIN,HEX.:0.25-32 X 0.312 INCH,BRS	73743	2X20319-402
-79	210-0046-00			1	. . WASHER,LOCK:INT,0.26 ID X 0.40" OD STL	78189	1214-05-00-0541C
					- - - * - - -		
-80	386-2273-00			2	. . PLATE,VAR RES M:CIRCUIT BOARD MOUNTING	80009	386-2273-00
-81	344-0154-00			4	. . CLIP,ELECTRICAL:FOR 0.25 INCH DIA FUSE	80009	344-0154-00
-82	159-0024-00			2	. . FUSE,CARTRIDGE:3AG,0.06A,250V,FAST BLOW	71400	AGC1-16
-83	136-0235-00			6	. . SOCKET,PLUG-IN:6 CONTACT,ROUND	71785	133-96-12-062
-84	131-0608-00			8	. . CONTACT,ELEC:0.365 INCH LONG	22526	47357
-85	426-0724-01			1	FR SECT,PLUG-IN:BOTTOM	80009	426-0724-01
-86	426-0725-01			1	FR SECT,PLUG-IN:TOP	80009	426-0725-01

EXPLODED VIEW

Fig. & Index No.	Tektronix Part No.	Serial/Model No. Eff	Dscont	Qty	1 2 3 4 5 Name & Description	Mfr Code	Mfr Part Number
1-87	175-0826-00			FT	WIRE,ELECTRICAL:3 WIRE RIBBON,0.750 FT	08261	TEK-175-0826-00
-88	175-0827-00			FT	WIRE,ELECTRICAL:4 WIRE RIBBON,0.250 FT	08261	TEK-175-0827-00
-89	175-0831-00			FT	WIRE,ELECTRICAL:8 WIRE RIBBON,0.625 FT	08261	TEK-175-0831-00
-90	352-0162-01			2	CONN BODY,PL,EL:4 WIRE BROWN	80009	352-0162-01
					ACCESSORIES		
	070-1947-00			1	MANUAL,TECH:INSTRUCTION(NOT SHOWN)	80009	070-1947-00
					REPACKAGING		
	065-0151-00			1	SHPNG CTN KIT:(NOT SHOWN)	80009	065-0151-00

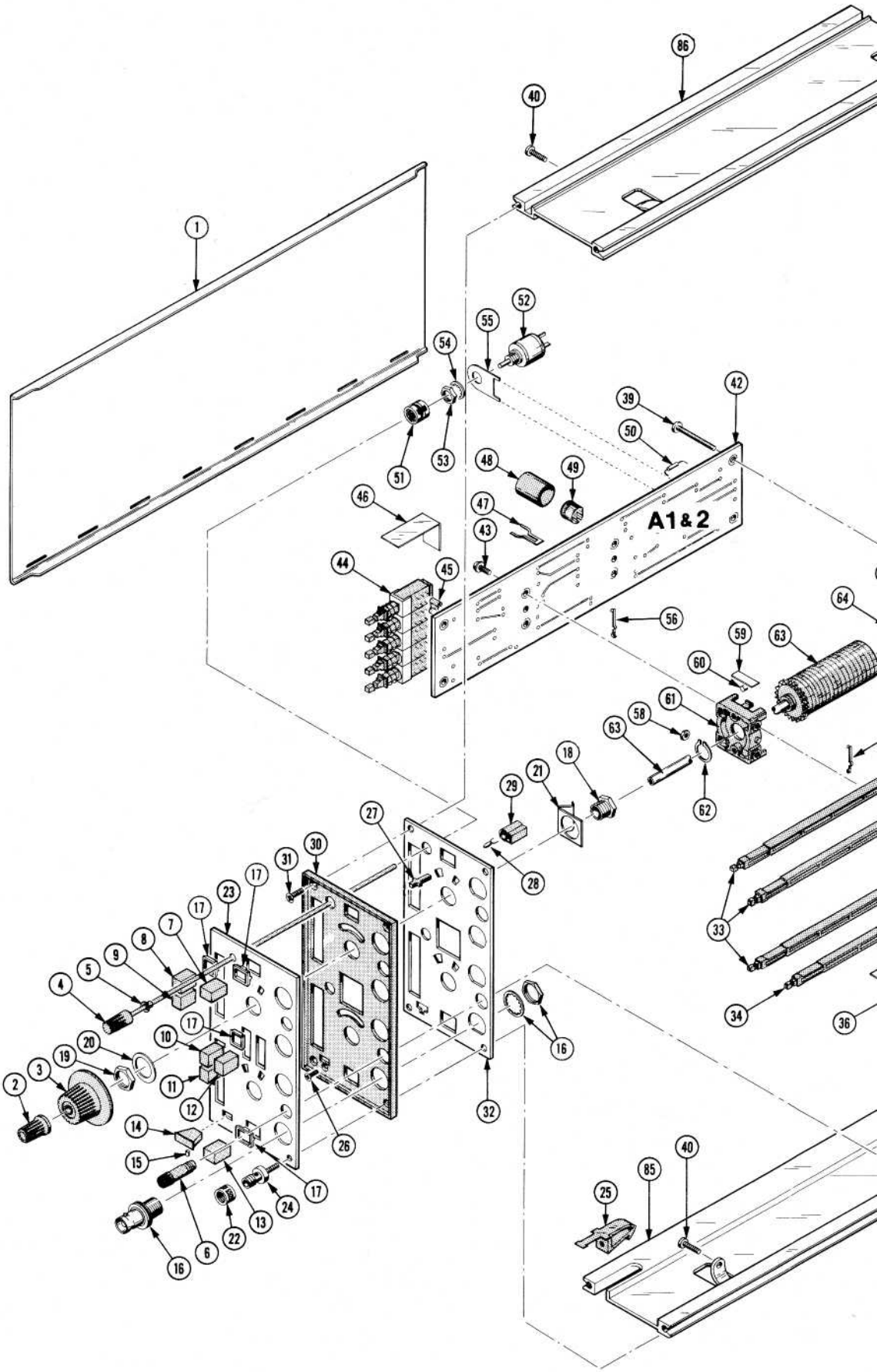
A1 & 2

@

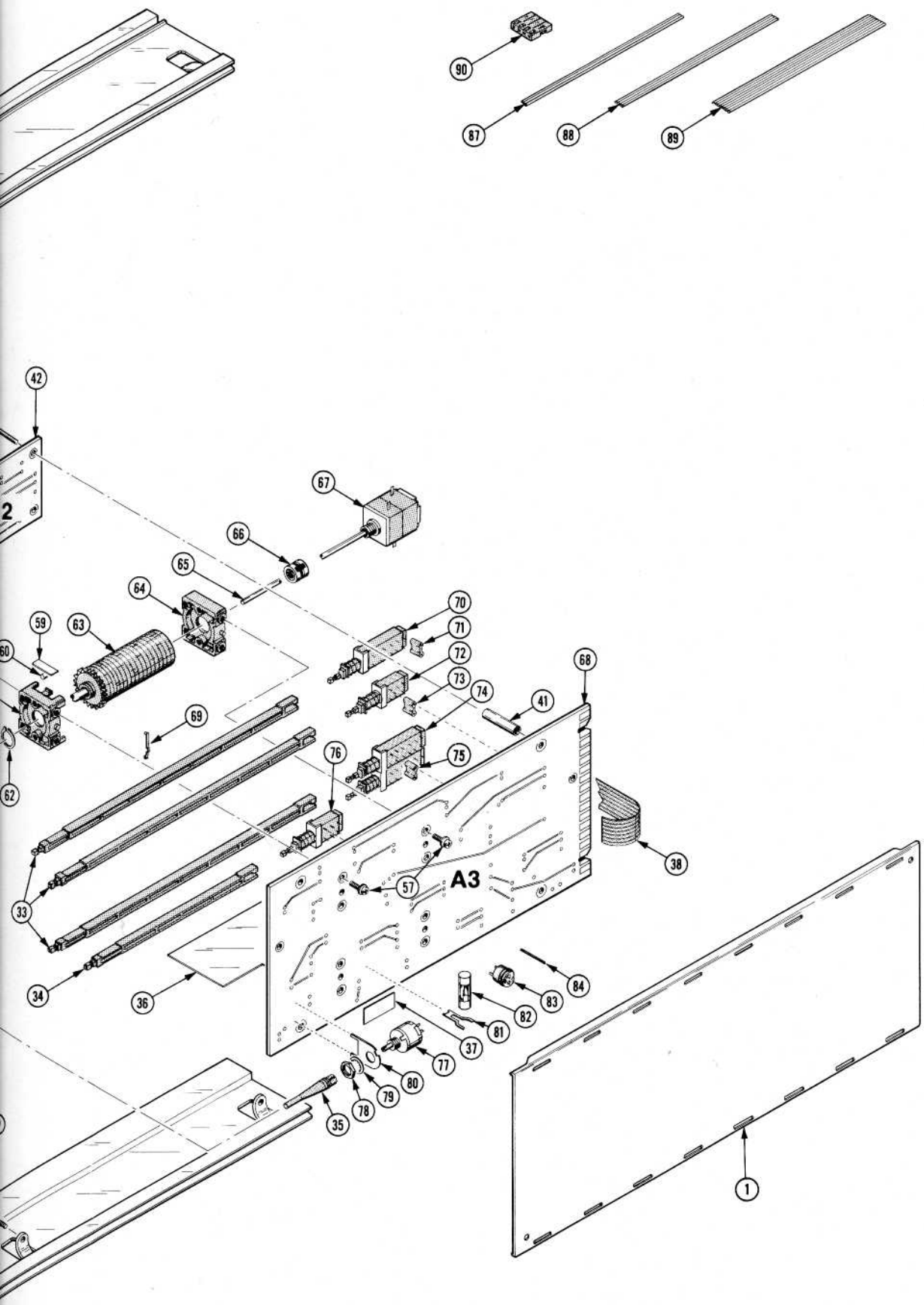
90
87
88
89
42
67
66
65
64
59
63
60
70
71
72
73
74
68
41
69
76
75
62
38
57
A3
33
34
36
84
83
82
81
37
77
80
79
78
35
1

MANUAL CHANGE INFORMATION

At Tektronix, we continually strive to keep up with latest electronic developments by adding circuit and component improvements to our instruments as soon as they are developed and tested.

Sometimes, due to printing and shipping requirements, we can't get these changes immediately into printed manuals. Hence, your manual may contain new change information on following pages.

A single change may affect several sections. Sections of the manual are often printed at different times, so some of the information on the change pages may already be in your manual. Since the change information sheets are carried in the manual until ALL changes are permanently entered, some duplication may occur. If no such change pages appear in this section, your manual is correct as printed.

TEKTRONIX®
committed to technical excellence

MANUAL CHANGE INFORMATION

PRODUCT 5A26
EFF ALL SN

CHANGE REFERENCE C1/675
DATE 6-9-75

CHANGE:	DESCRIPTION

070-1947-00

TEXT CORRECTIONS

1. On page 4-1, under the headings of Circuit Board Removal, Preamplifier Boards, change Steps 6 and 7 to read:

"6. Loosen set screws that attach POS control shaft to flexible coupler and remove shaft."

"7. Slide Preamplifier board back from front panel to free Input Coupling buttons.

2. On the Adjustment Locations pullout, add the following after Step 5i.

j. Rotate CH 2 CAL (Variable VOLTS/DIV) fully counterclockwise and check that display amplitude is 1.5 divisions or less.

3. Also on the Adjustment Locations pullout, change 6a to read as follows:

"a. Set 5A26 controls as follows:

CH 1 and CH 2 VOLTS/DIV	50 μ
MODE	CH 1 and CH 2 (buttons in)
CH 1 + and - Input Coupling	
AC	OUT: DC (button out)
GND	OFF: (button out)
CH 2 + and - Input	
AC	OUT: DC (button out)
GND	GND (button in)

ELECTRICAL PARTS LIST AND SCHEMATIC CHANGES

CHANGE TO:

Q386	151-0273-00	TRANSISTOR:SILICON,NPN 2N5249
R287	321-0289-00	RES.,FXD,FILM:10.0K OHM,1%,0.125W
R288	321-0289-00	RES.,FXD,FILM:10.0K OHM,1%,0.125W
R289	315-0303-00	RES.,FXD,CMPSN:30K OHM,5%,0.25W

(The above components are located on diagram 2 OUTPUT AMPLIFIERS)